US Army Corps
of Engineers
Savannah District

Seymour Johnson AFB
North Carolina

Solicitation Number
DACA21-01-R-0060
Operations, Maintenance and Storage Facilities
FY-02, Line Item VKAG001162
Volume I of III
Sections 00010 through 00800 and Divisions 1 and 2
December 2001

THIS SOLICITATION IS UNRESTRICTED PURSUANT TO THE
"BUSINESS OPPORTUNITY DEVELOPMENT REFORM ACT OF 1988"
(PUBLIC LAW 100-656)

U.S. ARMY ENGINEER DISTRICT, SAVANNAH
CORPS OF ENGINEERS
100 WEST OGLETHORPE AVENUE
SAVANNAH, GEORGIA 31401-3640

NOTICE TO BIDDERS

*1
1. PHASING: Contractor should be aware of the phasing requirements associated with Building 4421 and that all work associated with the Munitions Storage Building must be completed within 6 months from Notice to Proceed.

2. CLAUSE 52.0100-4806 HAND-CARRIED BIDS has been revised to read as follows:

52.0100-4806 HAND-CARRIED OR MAILED BIDS/PROPOSALS:

All bids/proposals must be clearly identified with the contractor name and address and Notice to Bidder OF-17 label affixed to the lower left corner of the outermost wrapper indicating the Invitation No., Date of Bid/Proposal Opening, Time of Opening, and Bid/Proposals For information. Bids/Proposals not properly identified on the outermost wrapper may not be acceptable if received late by the Contracting Officer, as there may be no way to determine the exact time of receipt by the agency.

The Government will not be responsible for bids delivered to any location or to anyone other than those designated to receive bids/proposals on its behalf as indicated below.

Bids/Proposals delivered by commercial carrier and those sent by U.S. Mail must be addressed as indicated below. Bids/proposals shall not be addressed to any specific person.

U.S. Army Engineer District, Savannah
ATTN: CESASCT-C
100 West Oglethorpe Avenue
Savannah, Georgia 31401-03640

Bids/Proposals sent by U.S. Mail must be mailed within sufficient time so that they will be received in the mailroom on the first floor not later than the exact time set for opening of bids/proposals.

Commercial carrier hand-carried bids/proposals must be delivered to mailroom personnel on the first floor not later than the exact time set for opening of bids/proposals.

Contractor hand-carried bid s/proposals delivered more than a half-hour before bid opening must also be delivered to mailroom personnel on the first floor.

Contractor hand-carried bids/proposals delivered within a half-hour of bid opening must be delivered to the bid opening room on the second floor.

3. CLAUSE 52.214-5(c) "FACSIMILE MODIFICATION OF BIDS" NOW CONTAINS THE FOLLOWING LANGUAGE:

ALL FACSIMILE BID MODIFICATIONS SHALL CONTAIN A COMPLETED BID SCHEDULE. THE SPACES SHALL BE FILLED IN FOR UNIT PRICES, EXTENDED PRICES AND TOTAL BID PRICE.

4. For those contracts over $1,000,000 a SUBCONTRACTING PLAN is required of the successful LARGE BUSINESS bidder/offeror. LARGE BUSINESS bidders/offerors should submit this plan with the bid/offer. This requirement shall be one of the elements addressed by the Contracting Officer in determination of Contractor responsibility prior to award of a contract.

(Revised by Amendment No. 0001)

5. SMALL BUSINESSES are exempt from the requirement to submit a subcontracting plan. They are NOT exempt from the requirement in FAR 52.219-8 to make maximum practicable opportunity available to other small businesses for subcontracting.

6. SUBCONTRACTING PLAN REQUIREMENTS:

a. FAR CLAUSE 52.219-9: Paragraphs (d) and (e) address the items that shall be included in the subcontracting plan.

b. DFARS 219.704(a)(1) addresses the use of Historically Black Colleges and Universities and Minority Institutions (HBCU/MI) subcontractors which is a composite of the small disadvantaged business (SDB) goal.

7. DFARS 219.705-4(d) addresses review of the subcontracting plan for positive goals and the extent to which an offeror plans to use competition restricted to small disadvantaged business concerns (SDB), historically black colleges and universities, or minority institutions (HBCU/MI).

8. For additional information concerning subcontracting plan requirements, please call Ms. Gwennette Parker, Small Business Specialist, telephone (912) 652-5340.

(Revised by Amendment No. 0001)

Solicitation No.
DACA21-01-R-0060

TABLE OF CONTENTS

00010 Solicitation/Contract Form and Bidding Schedule

00100 Instructions, Conditions, and Notices to Offerors

00600 Representations and Certifications

00700 Contract Clauses

00800 Special Contract Requirements

Attachment 1 to Section 00800

Specifications - Divisions 1 through 16

SOLICITATION, OFFER, AND AWARD *(Construction, Alteration, or Repair)*	1. SOLICITATION NO. DACA21-01-R-0060	2. TYPE OF SOLICITATION [ ] SEALED BID (IFB) [X] NEGOTIATED *(RFP)*	3. DATE ISSUED 10-Dec-2001	PAGE OF PAGES 1 OF 85

IMPORTANT - The "offer" section on the reverse must be fully completed by offeror.

4. CONTRACT NO.	5. REQUISITION/PURCHASE REQUEST NO.	6. PROJECT NO.

7. ISSUED BY CODE DACA21	8. ADDRESS OFFER TO *(If Other Than Item 7)* CODE
U.S. ARMY ENGINEER DISTRICT, SAVANNAH 100 WEST OGLETHORPE AVENUE P. O. BOX 889 SAVANNAH GA 31402-0889 TEL: FAX:	**See Item 7** TEL: FAX:

9. FOR INFORMATION CALL:	A. NAME	B. TELEPHONE NO. *(Include area code)* *(NO COLLECT CALLS)*
	ELLIOTT WILLIAMSON III	(912)652-5709

SOLICITATION

NOTE: In sealed bid solicitations "offer" and "offeror" mean "bid" and "bidder".

10. THE GOVERNMENT REQUIRES PERFORMANCE OF THE WORK DESCRIBED IN THESE DOCUMENTS *(Title, identifying no., date):*

Contracting Officer: Ms. Julie M. Oliver, (912) 652-5899
email: julie.m.oliver@sas02.usace.army.mil

REQUEST FOR PROPOSAL
FY-02, LINE ITEM VKAG001162

OPERATIONS, MAINTENANCE & STORAGE FACILITIES, SEYMOUR JOHNSON AFB, NORTH CAROLINA

11. The Contractor shall begin performance within 5 calendar days and complete it within 365 calendar days after receiving [ ] award, [X] notice to proceed. This performance period is [X] mandatory, [ ] negotiable. *(See* FAR 52.211-10 *.)*

12 A. THE CONTRACTOR MUST FURNISH ANY REQUIRED PERFORMANCE AND PAYMENT BONDS? *(If "YES," indicate within how many calendar days after award in Item 12B.)* [X] YES [ ] NO	12B. CALENDAR DAYS 5

13. ADDITIONAL SOLICITATION REQUIREMENTS:

A. Sealed offers in original and 6 copies to perform the work required are due at the place specified in Item 8 by 16:00:00 *(hour)* local time 1/10/02 *(date).* If this is a sealed bid solicitation, offers must be publicly opened at that time. Sealed envelopes containing offers shall be marked to show the offeror's name and address, the solicitation number, and the date and time offers are due.

B. An offer guarantee [X] is, [ ] is not required.

C. All offers are subject to the (1) work requirements, and (2) other provisions and clauses incorporated in the solicitation in full text or by reference.

D. Offers providing less than 90 calendar days for Government acceptance after the date offers are due will not be considered and will be rejected.

SOLICITATION, OFFER, AND AWARD (Continued)

(Construction, Alteration, or Repair)

OFFER ***(Must be fully completed by offeror)***

14. NAME AND ADDRESS OF OFFEROR *(Include ZIP Code)*		15. TELEPHONE NO. *(Include area code)*
		16. REMITTANCE ADDRESS *(Include only if different than Item 14)* **See Item 14**
CODE	FACILITY CODE	

17. The offeror agrees to perform the work required at the prices specified below in strict accordance with the terms of this solicitation, if this offer is accepted by the Government in writing within _____ calendar days after the date offers are due. *(Insert any number equal to or greater than the minimum requirements stated in Item 13D. Failure to insert any number means the offeror accepts the minimum in Item 13D.)*

AMOUNTS	SEE SCHEDULE OF PRICES

18. The offeror agrees to furnish any required performance and payment bonds.

19. ACKNOWLEDGMENT OF AMENDMENTS

(The offeror acknowledges receipt of amendments to the solicitation -- give number and date of each)

AMENDMENT NO.										
DATE										

20A. NAME AND TITLE OF PERSON AUTHORIZED TO SIGN OFFER *(Type or print)*	20B. SIGNATURE	20C. OFFER DATE

AWARD ***(To be completed by Government)***

21. ITEMS ACCEPTED:

SEE SCHEDULE

22. AMOUNT	23. ACCOUNTING AND APPROPRIATION DATA

24. SUBMIT INVOICES TO ADDRESS SHOWN IN *(4 copies unless otherwise specified)*	**ITEM**	25. OTHER THAN FULL AND OPEN COMPETITION PURSUANT TO ☐ 10 U.S.C. 2304(c) ☐ 41 U.S.C. 253(c)
26. ADMINISTERED BY CODE		27. PAYMENT WILL BE MADE BY CODE

CONTRACTING OFFICER WILL COMPLETE ITEM 28 OR 29 AS APPLICABLE

☐ 28. NEGOTIATED AGREEMENT *(Contractor is required to sign this document and return _____ copies to issuing office.)* Contractor agrees to furnish and deliver all items or perform all work, requisitions identified on this form and any continuation sheets for the consideration stated in this contract. The rights and obligations of the parties to this contract shall be governed by (a) this contract award, (b) the solicitation, and (c) the clauses, representations, certifications, and specifications or incorporated by reference in or attached to this contract.		☐ 29. AWARD *(Contractor is not required to sign this document.)* Your offer on this solicitation, is hereby accepted as to the items listed. This award consummates the contract, which consists of (a) the Government solicitation and your offer, and (b) this contract award. No further contractual document is necessary.	
30A. NAME AND TITLE OF CONTRACTOR OR PERSON AUTHORIZED TO SIGN *(Type or print)*		31A. NAME OF CONTRACTING OFFICER *(Type or print)*	
30B. SIGNATURE	30C. DATE	31B. UNITED STATES OF AMERICA BY	31C. AWARD DATE

SECTION 00010 Solicitation Contract Form

SUPPLIES OR SERVICES AND PRICE/COSTS

SCHEDULE

OPERATIONS MAINTENANCE AND STORAGE FACILITIES
SEYMOUR JOHNSON AFB, NORTH CAROLINA

TOTAL BID ITEMS (0001 THROUGH 0004)----------$_____

ITEM NO	SUPPLIES/SERVICES	QUANTITY	UNIT	UNIT PRICE	AMOUNT
0001		1.00	Lump Sum	$_____	$_____
	BASE FFP - Add/Alter Squadron Operations Building 4421 to the 5'0" Building Line				

ITEM NO	SUPPLIES/SERVICES	QUANTITY	UNIT	UNIT PRICE	AMOUNT
0002		1.00	Lump Sum	$_____	$_____
	BASE FFP - All site work for Add/Alter Squadron Operations Building 4421 outside the 5'0" Buiding Line				

ITEM NO	SUPPLIES/SERVICES	QUANTITY	UNIT	UNIT PRICE	AMOUNT
0003		1.00	Lump Sum	$_____	$_____
	BASE FFP - Construct Munitions Storage Building to the 5'0" Building Line				

ITEM NO	SUPPLIES/SERVICES	QUANTITY	UNIT	UNIT PRICE	AMOUNT
0004		1.00	Lump Sum	$_____	$_____
	BASE FFP - All site work for construction of munitions storage building outside munitions storage building outside the 5'0" building line.				

SECTION 00100 Bidding Schedule/Instructions to Bidders

CLAUSES INCORPORATED BY FULL TEXT

52.204-6 DATA UNIVERSAL NUMBERING SYSTEM (DUNS) NUMBER (JUN 99)

(a) The offeror shall enter, in the block with its name and address on the cover page of its offer, the annotation "DUNS" followed by the DUNS number that identifies the offeror's name and address exactly as stated in the offer.

(b) If the offeror does not have a DUNS number, it should contact Dun and Bradstreet directly to obtain one. A DUNS number will be provided immediately by telephone at no charge to the offeror. For information on obtaining a DUNS number, the offeror, if located within the United States, should call Dun and Bradstreet at 1-800-333-0505. The offeror should be prepared to provide the following information:

(1) Company name.

(2) Company address.

(3) Company telephone number.

(4) Line of business.

(5) Chief executive officer/key manager.

(6) Date the company was started.

(7) Number of people employed by the company.

(8) Company affiliation.

(c) Offerors located outside the United States may obtain the location and phone number of the local Dun and Bradstreet Information Services office from the Internet Home Page at http://www.customerservice@dnb.com. If an offeror is unable to locate a local service center, it may send an e-mail to Dun and Bradstreet at globalinfo@mail.dnb.com.

(End of provision)

52.211-2 AVAILABILITY OF SPECIFICATIONS LISTED IN THE DOD INDEX OF SPECIFICATIONS AND STANDARDS (DODISS) AND DESCRIPTIONS LISTED IN THE ACQUISITION MANAGEMENT SYSTEMS AND DATA REQUIREMENTS CONTROL LIST, DOD 5010.12-L (DEC 1999)

Copies of specifications, standards, and data item descriptions cited in this solicitation may be obtained--

(a) From the ASSIST database via the Internet at http://assist.daps.mil; or

(b) By submitting a request to the--Department of Defense Single Stock Point (DoDSSP), Building 4, Section D, 700 Robbins Avenue, Philadelphia, PA 19111-5094, Telephone (215) 697-2667/2179, Facsimile (215) 697-1462.

(End of provision)

52.211-14 NOTICE OF PRIORITY RATING FOR NATIONAL DEFENSE USE (SEP 1990)

Any contract awarded as a result of this solicitation will be DX rated order; X DO rated order certified for national defense use under the Defense Priorities and Allocations System (DPAS) (15 CFR 700), and the Contractor will be required to follow all of the requirements of this regulation. [Contracting Officer check appropriate box.]

(End of provision)

52.214-34 SUBMISSION OF OFFERS IN THE ENGLISH LANGUAGE (APR 1991)

Offers submitted in response to this solicitation shall be in the English language. Offers received in other than English shall be rejected.

(End of provision)

52.214-35 SUBMISSION OF OFFERS IN U.S. CURRENCY (APR 1991)

Offers submitted in response to this solicitation shall be in terms of U.S. dollars. Offers received in other than U.S. dollars shall be rejected.

(End of provision)

52.214-4002 HAND-CARRIED OR MAILED BIDS/PROPOSALS:

All bids/proposals must be clearly identified with the contractor name and address and Notice to Bidder OF-17 label affixed to the lower left corner of the outermost wrapper indicating the Invitation No., Date of Bid/Proposal Opening, Time of Opening, and Bid/Proposals For information. Bids/Proposals not properly identified on the outermost wrapper may not be acceptable if received late by the Contracting Officer, as there may be not way to determine the exact time of receipt by the agency.

The Government will not be responsible for bids delivered to any location or to anyone other than those designated to receive bids/proposals on its behalf as indicated below.

Bids/Proposals delivered by commercial carrier and those sent by U.S. Mail must be addressed as indicated below. Bids/proposals shall not be addressed to any specific person.

U.S. Army Engineer District, Savannah
ATTN: CESAS-CT-C
100 West Oglethorpe Avenue
Savannah, Georgia 31401-3640

Bids/Proposals sent by U.S. Mail must be mailed within sufficient time so that they will be received in the mailroom on the first floor not later than the exact time set for opening of bids/proposals.

Commercial carrier hand-carried bids/proposals must be delivered to mailroom personnel on the first floor not later than the exact time set opening of bids/proposals.

Contractor hand-carried bids/proposals delivered more than a half-hour before bid opening must also be delivered to mailroom personnel on the first floor.

Contractor hand-carried bids/proposals delivered within a half-hour of bid opening must be delivered to the bid opening room on the second floor.

52.214-4003 AMENDMENTS

Amendments to this solicitation will be posted on the Internet at http://www.sas.usace.army.mil/ebs/ unless the total amended compressed files are greater than 5 MBYTES in which case a new CD ROM disk will be issued. For those amendments that are only posted on the internet, a paper copy of SF30, Amendment of Solicitation/Modification of Contract," including a list of revised specifications and drawings will be mailed to each bidder.

52.215-1 INSTRUCTIONS TO OFFERORS--COMPETITIVE ACQUISITION (MAY 2001)

(a) Definitions. As used in this provision--

“Discussions” are negotiations that occur after establishment of the competitive range that may, at the Contracting Officer's discretion, result in the offeror being allowed to revise its proposal.

In writing, writing, or written means any worded or numbered expression that can be read, reproduced, and later communicated, and includes electronically transmitted and stored information.

“Proposal modification” is a change made to a proposal before the solicitation's closing date and time, or made in response to an amendment, or made to correct a mistake at any time before award.

“Proposal revision” is a change to a proposal made after the solicitation closing date, at the request of or as allowed by a Contracting Officer as the result of negotiations.

“Time”, if stated as a number of days, is calculated using calendar days, unless otherwise specified, and will include Saturdays, Sundays, and legal holidays. However, if the last day falls on a Saturday, Sunday, or legal holiday, then the period shall include the next working day.

(b) Amendments to solicitations. If this solicitation is amended, all terms and conditions that are not amended remain unchanged. Offerors shall acknowledge receipt of any amendment to this solicitation by the date and time specified in the amendment(s).

(c) Submission, modification, revision, and withdrawal of proposals. (1) Unless other methods (e.g., electronic commerce or facsimile) are permitted in the solicitation, proposals and modifications to proposals shall be submitted in paper media in sealed envelopes or packages (i) addressed to the office specified in the solicitation, and (ii) showing the time and date specified for receipt, the solicitation number, and the name and address of the offeror. Offerors using commercial carriers should ensure that the proposal is marked on the outermost wrapper with the information in paragraphs (c)(1)(i) and (c)(1)(ii) of this provision.

(2) The first page of the proposal must show--

(i) The solicitation number;

(ii) The name, address, and telephone and facsimile numbers of the offeror (and electronic address if available);

(iii) A statement specifying the extent of agreement with all terms, conditions, and provisions included in the solicitation and agreement to furnish any or all items upon which prices are offered at the price set opposite each item;

(iv) Names, titles, and telephone and facsimile numbers (and electronic addresses if available) of persons authorized to negotiate on the offeror's behalf with the Government in connection with this solicitation; and

(v) Name, title, and signature of person authorized to sign the proposal. Proposals signed by an agent shall be accompanied by evidence of that agent's authority, unless that evidence has been previously furnished to the issuing office.

(3) Submission, modification, or revision, of proposals.

(i) Offerors are responsible for submitting proposals, and any modifications, or revisions, so as to reach the Government office designated in the solicitation by the time specified in the solicitation. If no time is specified in the solicitation, the time for receipt is 4:30 p.m., local time, for the designated Government office on the date that proposal or revision is due.

(ii)(A) Any proposal, modification, or revision received at the Government office designated in the solicitation after the exact time specified for receipt of offers is “late” and will not be considered unless it is received before award is made, the Contracting Officer determines that accepting the late offer would not unduly delay the acquisition; and--

(1) If it was transmitted through an electronic commerce method authorized by the solicitation, it was received at the initial point of entry to the Government infrastructure not later than 5:00 p.m. one working day prior to the date specified for receipt of proposals; or

(2) There is acceptable evidence to establish that it was received at the Government installation designated for receipt of offers and was under the Government's control prior to the time set for receipt of offers; or

(3) It is the only proposal received.

(B) However, a late modification of an otherwise successful proposal that makes its terms more favorable to the Government, will be considered at any time it is received and may be accepted.

(iii) Acceptable evidence to establish the time of receipt at the Government installation includes the time/date stamp of that installation on the proposal wrapper, other documentary evidence of receipt maintained by the installation, or oral testimony or statements of Government personnel.

(iv) If an emergency or unanticipated event interrupts normal Government processes so that proposals cannot be received at the office designated for receipt of proposals by the exact time specified in the solicitation, and urgent Government requirements preclude amendment of the solicitation, the time specified for receipt of proposals will be deemed to be extended to the same time of day specified in the solicitation on the first work day on which normal Government processes resume.

(v) Proposals may be withdrawn by written notice received at any time before award. Oral proposals in response to oral solicitations may be withdrawn orally. If the solicitation authorizes facsimile proposals, proposals may be withdrawn via facsimile received at any time before award, subject to the conditions specified in the provision at 52.215-5, Facsimile Proposals. Proposals may be withdrawn in person by an offeror or an authorized representative, if the identity of the person requesting withdrawal is established and the person signs a receipt for the proposal before award.

(4) Unless otherwise specified in the solicitation, the offeror may propose to provide any item or combination of items.

(5) Offerors shall submit proposals in response to this solicitation in English, unless otherwise permitted by the solicitation, and in U.S. dollars, unless the provision at FAR 52.225-17, Evaluation of Foreign Currency Offers, is included in the solicitation.

(6) Offerors may submit modifications to their proposals at any time before the solicitation closing date and time, and may submit modifications in response to an amendment, or to correct a mistake at any time before award.

(7) Offerors may submit revised proposals only if requested or allowed by the Contracting Officer.

(8) Proposals may be withdrawn at any time before award. Withdrawals are effective upon receipt of notice by the Contracting Officer.

(d) Offer expiration date. Proposals in response to this solicitation will be valid for the number of days specified on the solicitation cover sheet (unless a different period is proposed by the offeror).

(e) Restriction on disclosure and use of data. Offerors that include in their proposals data that they do not want disclosed to the public for any purpose, or used by the Government except for evaluation purposes, shall--

(1) Mark the title page with the following legend: This proposal includes data that shall not be disclosed outside the Government and shall not be duplicated, used, or disclosed--in whole or in part--for any purpose other than to evaluate this proposal. If, however, a contract is awarded to this offeror as a result of--or in connection with-- the submission of this data, the Government shall have the right to duplicate, use, or disclose the data to the extent provided in the resulting contract. This restriction does not limit the Government's right to use information contained in this data if it is obtained from another source without restriction. The data subject to this restriction are contained in sheets [insert numbers or other identification of sheets]; and

(2) Mark each sheet of data it wishes to restrict with the following legend: Use or disclosure of data contained on this sheet is subject to the restriction on the title page of this proposal.

(f) Contract award. (1) The Government intends to award a contract or contracts resulting from this solicitation to the responsible offeror(s) whose proposal(s) represents the best value after evaluation in accordance with the factors and subfactors in the solicitation.

(2) The Government may reject any or all proposals if such action is in the Government's interest.

(3) The Government may waive informalities and minor irregularities in proposals received.

(4) The Government intends to evaluate proposals and award a contract without discussions with offerors (except clarifications as described in FAR 15.306(a)). Therefore, the offeror's initial proposal should contain the offeror's best terms from a cost or price and technical standpoint. The Government reserves the right to conduct discussions if the Contracting Officer later determines them to be necessary. If the Contracting Officer determines that the number of proposals that would otherwise be in the competitive range exceeds the number at which an efficient competition can be conducted, the Contracting Officer may limit the number of proposals in the competitive range to the greatest number that will permit an efficient competition among the most highly rated proposals.

(5) The Government reserves the right to make an award on any item for a quantity less than the quantity offered, at the unit cost or prices offered, unless the offeror specifies otherwise in the proposal.

(6) The Government reserves the right to make multiple awards if, after considering the additional administrative costs, it is in the Government's best interest to do so.

(7) Exchanges with offerors after receipt of a proposal do not constitute a rejection or counteroffer by the Government.

(8) The Government may determine that a proposal is unacceptable if the prices proposed are materially unbalanced between line items or subline items. Unbalanced pricing exists when, despite an acceptable total evaluated price, the price of one or more contract line items is significantly overstated or understated as indicated by the application of cost or price analysis techniques. A proposal may be rejected if the Contracting Officer determines that the lack of balance poses an unacceptable risk to the Government.

(9) If a cost realism analysis is performed, cost realism may be considered by the source selection authority in evaluating performance or schedule risk.

(10) A written award or acceptance of proposal mailed or otherwise furnished to the successful offeror within the time specified in the proposal shall result in a binding contract without further action by either party.

(11) The Government may disclose the following information in postaward debriefings to other offerors:

(i) The overall evaluated cost or price and technical rating of the successful offeror;

(ii) The overall ranking of all offerors, when any ranking was developed by the agency during source selection;

(iii) A summary of the rationale for award; and

(iv) For acquisitions of commercial items, the make and model of the item to be delivered by the successful offeror.

(End of provision)

52.215-20 REQUIREMENTS FOR COST OR PRICING DATA OR INFORMATION OTHER THAN COST OR PRICING DATA (OCT 1997)

(a) Exceptions from cost or pricing data. (1) In lieu of submitting cost or pricing data, offerors may submit a written request for exception by submitting the information described in the following subparagraphs. The Contracting Officer may require additional supporting information, but only to the extent necessary to determine whether an exception should be granted, and whether the price is fair and reasonable.

(i) Identification of the law or regulation establishing the price offered. If the price is controlled under law by periodic rulings, reviews, or similar actions of a governmental body, attach a copy of the controlling document, unless it was previously submitted to the contracting office.

(ii) Commercial item exception. For a commercial item exception, the offeror shall submit, at a minimum, information on prices at which the same item or similar items have previously been sold in the commercial market that is adequate for evaluating the reasonableness of the price for this acquisition. Such information may include--

(A) For catalog items, a copy of or identification of the catalog and its date, or the appropriate pages for the offered items, or a statement that the catalog is on file in the buying office to which the proposal is being submitted. Provide a copy or describe current discount policies and price lists (published or unpublished), e.g., wholesale, original equipment manufacturer, or reseller. Also explain the basis of each offered price and its relationship to the established catalog price, including how the proposed price relates to the price of recent sales in quantities similar to the proposed quantities;

(B) For market-priced items, the source and date or period of the market quotation or other basis for market price, the base amount, and applicable discounts. In addition, describe the nature of the market;

(C) For items included on an active Federal Supply Service Multiple Award Schedule contract, proof that an exception has been granted for the schedule item.

(2) The offeror grants the Contracting Officer or an authorized representative the right to examine, at any time before award, books, records, documents, or other directly pertinent records to verify any request for an exception under this provision, and the reasonableness of price. For items priced using catalog or market prices, or law or regulation , access does not extend to cost or profit information or other data relevant solely to the offeror's determination of the prices to be offered in the catalog or marketplace.

(b) Requirements for cost or pricing data. If the offeror is not granted an exception from the requirement to submit cost or pricing data, the following applies:

(1) The offeror shall prepare and submit cost or pricing data and supporting attachments in accordance with Table 15-2 of FAR 15.408.

As soon as practicable after agreement on price, but before contract award (except for unpriced actions such as letter contracts), the offeror shall submit a Certificate of Current Cost or Pricing Data, as prescribed by FAR 15.406-2.

(End of provision)

52.214-4001 FACSIMILE MODIFICATION OF OFFERS (Ref. FAR 52.215-1(c)) (JUL 1999)

(a) Definition. "Facsimile proposal modification," as used in this solicitation means a modification to a proposal that has been submitted in accordance with the solicitation.
(b) Offerors may submit facsimile proposal modifications to this solicitation. These facsimile proposal modifications must arrive at the place, and by the time specified in the solicitation.
(c) ALL FACSIMILE BID MODIFICATIONS SHALL CONTAIN A COMPLETED BID SCHEDULE. THE SPACES SHALL BE FILLED IN FOR UNIT PRICES, EXTENDED PRICES AND TOTAL BID PRICE.
(d) Facsimile proposal modifications must contain the signature of an official of the company.
(e) Facsimile receiving data and compatibility characteristics are as follows:
(1) Telephone number of receiving facsimile equipment: 912-652-6001
(2) Compatibility characteristics - CCTTT Group 3, 2, 1
(f) If the offeror chooses to transmit a facsimile proposal modification, the Government will not be responsible for any failure attributable to the transmission or receipt of the facsimile modification, including, but not limited to, the following:
(1) Receipt of garbled or incomplete modification.
(2) Availability or condition of the receiving facsimile equipment.
(3) Incompatibility between the sending and receiving equipment.
(4) Delay in transmission or receipt of modification.
(5) Failure of the offeror to properly identify the modification.
(6) Illegibility of modification.
(7) Security of modification data.
(End of provision)

52.215-4004 PROPOSAL SUBMISSION REQUIREMENTS AND INSTRUCTIONS

1. PROPOSAL OVERVIEW

1.1 General. Inasmuch as the proposal shall describe the capability of the offeror to perform any resultant contract, it should be specific and complete in every detail. The proposal should be prepared simply and economically, providing straight-forward, concise delineation of capabilities to satisfactorily perform the contract being sought. The proposal should therefore be practical, legible, clear and coherent.

1.2 Proposal Submissions and the Lowest Price Technically Acceptable Process. This process requires potential contractors to submit their performance and capability information initially for review and consideration by the Government. Following the review, evaluation, and rating of these proposals, the Government will evaluate price proposals for contractors that have acceptable technical proposals. The technical information contained in the proposal shall be reviewed and evaluated by the Government in accordance with the evaluation criteria set out in Section 00120 – EVALUATION MANUAL. Price information will not be rated but will be evaluated in accordance with FAR 15, funding limitations set out in Section 00010 – PRICE PROPOSAL SCHEDULE, and other Offeror's price proposals. Award will be made to that Offeror whose proposal is technically acceptable and has the lowest price that is determined to be fair and reasonable. The proposal for this low price technically acceptable procurement consists of the following individual pieces:

- Pro Forma Information
- Price Proposal
- Proposal Data Sheet
- Offeror Past Performance Information (Completed Projects Customer Surveys)
- Offeror Relevant Specialized Experience (Example Projects)
- Other factors as needed.

2. PROPOSAL SUBMISSION INSTRUCTIONS

2.1 Who May Submit. Any legally organized Offeror may submit a proposal.

2.2 Where to Submit. Offerors shall submit their proposal packages to the Savannah District at the address shown in Block 7 of Standard Form 1442.

2.3 Submission Deadline. Proposals shall be received by the Savannah District no later than the time and date specified in Block 13 of Standard Form 1442.

2.4 General Requirements.

2.4.1 In order to effectively and equitably evaluate all proposals, the Contracting Officer must receive information sufficiently detailed to allow review and evaluation by the Government.

2.4.2 Written materials shall be on 8-1/2" x 11" paper.

3 PROPOSAL REQUIREMENTS AND SUBMISSION FORMAT.

3.1 The proposals sought by this solicitation shall contain the following information clearly identified and severable as follows:

3.2 Pro Forma Information. This information should be submitted in an envelope labeled "Pro Forma Requirements." This category consists of representations and certifications, proposal bonds, and completed Standard Form 1442. Provide original documents only.

3.3 Price Proposal Information. Offerors shall complete all portions of the Price Proposal Schedule from Section 00010 and furnish the original in a separate envelope labeled “PRICE PROPOSAL”. The technical proposal shall not include any cost information.

3.4 Proposal Data Sheet. Offerors shall complete the attached Proposal Data Sheet.

3.5 FACTOR 1-1 Offeror Past Performance Information. A sample Past Performance Evaluation Questionnaire is included at the end of this section. The Offeror shall identify a minimum of three in-progress or completed projects to be used for reference and evaluation purposes and provide a questionnaire to the Point of Contact for each project listed for completion. When completed, these forms shall be mailed or faxed to the Savannah District Contract Specialist identified in the sample transmittal letter provided. Failure of a reference verification to arrive at the Savannah District within the identified time period may adversely affect the overall rating received for i this project. It is the contractor’s responsibility to ensure that the reference documentation is provided. The Government will not make additional requests for past performance information or references. Copies of the evaluation form shall be provided to the Savannah District directly from the reference. Projects from which questionnaires are received shall have been completed or substantially completed within three years of the date of the solicitation.

3.6 FACTOR 1-2 Offeror Relevant Specialized Experience. Provide examples (at least three) of projects for which the offeror has been responsible. The examples are to be specifically related to the renovation of existing buildings, to include those occupied during construction. Provide references (with contact names and telephone numbers) for all examples cited. Each example shall indicate the general character, scope, location, cost, and date of completion of the project. If the offeror represents the combining of two or more companies for the purpose of this RFP, each company shall list project examples. Example projects must have been completed or substantially completed within three years of the date of the solicitation.

4. EXCEPTIONS

Exceptions to the contractual terms and conditions of the solicitation (e.g., standard company terms and conditions) may result in a determination to reject a proposal.

5. RESTRICTIONS

Incomplete proposals. Failure to submit all the data indicated in this section may be cause for determining a proposal incomplete and, therefore, not considered for evaluation, and for subsequent award.

PROPOSAL DATA SHEET

Opeartions, Maintenance & Storage Facilities, VKAG001162, FY02 Seymour Johnson AFB, North Carolina

NOTE TO OFFERORS
This OFFEROR PERFORMANCE CAPABILITY PROPOSAL DATA SHEET must be completed and attached as the first page of the body of your proposal. The information required by this data sheet may be completed directly on this form or attached to the form as supplemental data sheets.

1. NAME OF OFFEROR.

Name of Offeror(s):

If a joint venture or contractor-subcontractor association of firms, list the individual firms and briefly describe the nature of the association.

Firm 1:

Firm 2:

Firm 3:

Firm 4:

Nature of Association:

2. AUTHORIZED NEGOTIATORS. FAR 52.215-11

The offeror represents that the following persons are authorized to negotiate on its behalf with the Government in connection with this Request for Proposals (RFP).

[List names, titles, and telephone number of the authorized negotiator.]

Name of Person Authorized to Negotiate:

Negotiator's Address:

Negotiator's Telephone:

PROPOSAL DATA SHEET
(Continued)

3. FACTOR 1-1: PAST PERFORMANCE INFORMATION.

3.1 On an attached sheet, provide information for three in-progress or completed projects, preferably of similar design or features, that are being or have been constructed by the offeror to be used for reference and evaluation purposes. These should be the same projects for which questionnaires have been provided to the Procurement Point of Contact.

For each project provide the following information:

Project Title:

Location:

Contract number:

Procuring activity:

Procurement point of contact and telephone number:

List date of construction completion or percent completion if construction is underway:

Address of building(s):

Address and telephone number of owner:

Indicate type of project (private sector, Government, planned unit development, etc.):

General character:

Total cost:

Total cost of all modifications:

3.2 On an attached sheet, list all contracts with the Government within the last three years. Indicate Government contract number and contracting agency (with contact names and telephone numbers).

PROPOSAL DATA SHEET
(Continued)

4. FACTOR 1-2: RELEVANT SPECIALIZED EXPERIENCE.

4.1 On an attached sheet, provide information for in-progress or completed projects completed within three years of the date of the solicitation that are similar in terms of cost, complexity, design or features, that have been constructed by the offeror to be used for reference and evaluation purposes. For each project provide the following information:

Project Title:

Location:

Contract number:

Nature of involvement in this project, i.e. General Contractor, subcontractor, designer:

Procuring activity:

Procurement point of contact and telephone number:

List date of construction completion or percent completion if construction is underway:

Address of building(s):

Address and telephone number of owner:

Indicate type of project (private sector, Government, planned unit development, etc.):

General character:

Total cost:

SAMPLE TRANSMITTAL LETTER
AND
PAST PERFORMANCE EVALUATION QUESTIONNAIRE

Date: _____

To: _____
_____
_____

We have listed your firm as a reference for work we have performed for you as listed below. Our firm has submitted a proposal under a project advertised by the U.S. Army Corps of Engineers, Savannah District. In accordance with Federal Acquisition Regulations (FAR), an evaluation of our firm's past performance will be completed by the Corps of Engineers. Your candid response to the attached questionnaire will assist the evaluation team in this process.

We understand that you have a busy schedule and your participation in this evaluation is greatly appreciated. Please complete the enclosed questionnaire as thoroughly as possible. Space is provided for comments. Understand that while the responses to this questionnaire may be released to the offeror, FAR 15.306 (e)(4) prohibits the release of the names of the persons providing the responses. Complete confidentiality will be maintained. Furthermore, a questionnaire has also been sent to _____ of your organization. Only one response from each office is required. If at all possible, we suggest that you individually answer this questionnaire and then coordinate your responses with that of _____, to forge a consensus on one overall response from your organization.

Please send your completed questionnaire to the following address to arrive NOT LATER THAN _____:

U.S. Army Engineer District, Savannah
ATTN: CESAS-CT-C (Mr. Elliott Williamson)
100 West Oglethorpe Avenue
Savannah, Georgia 31402

The questionnaires can also be faxed to Mr. Elliott Williamson, the Savannah District Contract Specialist. If you have questions regarding the attached questionnaire, or require assistance, please contact Mr. Williamson at (912) 652-5709. Thank you for your assistance.

PAST PERFORMANCE EVALUATION QUESTIONNAIRE

Upon completion of this form, please send directly to the U.S. Army Corps of Engineers in the enclosed addressed envelope or fax to (912) 652-5828 , ATTN: Mr. Elliott Williamson. Do not return this form to our offices. Thank you.

1. Contractor/Name & Address (City and State):

2. Type of Contract: Fixed Price _____ Cost Reimbursement _____
Other (Specify) _____

3. Title of Project/Contract Number:
_____
_____
_____

4. Description of Work: (Attach additional pages as necessary)

5. Complexity of Work: High _____ Mid _____ Routine _____

6. Location of Work:_____

7. Date of Award: _____

8. Status: Active _____ (provide percent complete)

Complete _____ (provide completion date)

9. Name, address and telephone number of Contracting Officer's Technical Representative:

10. QUALITY OF CONSTRUCTION:

Evaluate the contractor's performance in complying with contract requirements, quality achieved and overall technical expertise demonstrated.

Excellent Quality	
Above Average Quality	
Average Quality	
Below Average Quality	
Unsuccessful or Experienced Significant Quality Problems	

Remarks: _____
_____
_____
_____

11. TIMELINESS OF PERFORMANCE:

To what extent did the contractor meet the contract and/or individual task order schedules if the contract was an indefinite delivery type contract?

Completed Substantially Ahead of Schedule	
Completed on Schedule with no Time Delays	
Completed on Schedule with Minor Delays Under Extenuating Circumstances	
Experienced Significant Delays without Justification	

Remarks: _____
_____
_____
_____

12. DOCUMENTATION

To what extent were the contractor's reports and documentation accurate, complete and submitted in a timely manner?

Excellent Quality	
Above Average Quality	
Average Quality	
Below Average Quality	
Unsuccessful or Experienced Significant Quality Problems	

Remarks: _____

_____

_____

_____

13. CUSTOMER SATISFACTION:

To what extent were the end users satisfied with:

	Quality?	**Cost?**	**Schedule?**
Exceptionally Satisfied			
Highly Satisfied			
Satisfied			
Somewhat Dissatisfied			
Highly Dissatisfied			

Remarks:

_____

_____

_____

14. SUBCONTRACTOR MANAGEMENT

How well did the contractor manage and coordinate subcontractors, suppliers, and the labor force?

Excellent	
Above Average	

Average	
Below Average	
Unsuccessful	

Remarks:

_____
_____
_____
_____
_____

15. If given the opportunity, would you work with this contractor again?

Yes _____ **No** _____ **Not Sure** _____

Remarks:

_____
_____
_____
_____
_____

16. OTHER REMARKS:

Use the space below to provide other information related to the contractor's performance. This may include the contractor's selection and management of subcontractors, flexibility in dealing with contract challenges, their overall concern for the Government's interest (if applicable), project awards received, etc.

_____
_____
_____
_____
_____
_____
_____
_____

52.216-1 TYPE OF CONTRACT (APR 1984)

The Government contemplates award of a firm-fixed price contract resulting from this solicitation.

(End of clause)

52.219-4001 SUBCONTRACTING PLAN FOR SMALL BUSINESS AND SMALL DISADVANTAGED BUSINESS CONCERNS (MAY 1997 CESAS-CT-C)

(a) In accordance with FAR Clause 52.219-9, large businesses must submit a subcontracting plan. A sample subcontracting plan is located in Section 00800.
(b) The goals of the Savannah District for subcontracting to small businesses, small disadvantaged businesses, and women-owned small businesses are:

	Basic Year	Option Year
(1) Total Amount of Prime Contract	$10,000,000	_____
(2) Total Dollars Planned for Subcontract Award (10% of Line (1))	$ 1,000,000	_____
(3) Dollars Planned for Subcontracting to Large Business (38% of Line (2))	$ 380,000	_____
(4) Total Dollars Planned for Subcontracting to Small Business (62% of Line (2))	$ 620,000	_____
(A) Dollars Planned for Subcontracting to Small Disadvantaged Business (10% of Line (2))	$ 100,000	_____
(B) Dollars Planned for Subcontracting to Women-Owned Business (5%) of Line (2))	$ 50,000	_____
(C) Dollars Planned for Subcontracting to Other Small Business (47%) of Line (2))	$ 470,000	_____

If you cannot reach the above-stated goals, you must provide written justification with your subcontracting plan detailing the reasons you cannot meet the requirements.
(End of provision)

52.222-23 NOTICE OF REQUIREMENT FOR AFFIRMATIVE ACTION TO ENSURE EQUAL EMPLOYMENT OPPORTUNITY FOR CONSTRUCTION (FEB 1999)

(a) The offeror's attention is called to the Equal Opportunity clause and the Affirmative Action Compliance Requirements for Construction clause of this solicitation.

(b) The goals for minority and female participation, expressed in percentage terms for the Contractor's aggregate workforce in each trade on all construction work in the covered area, are as follows:

Goals for minority	Goals for female

participation for each trade	participation for each trade
31.7	6.9%

These goals are applicable to all the Contractor's construction work performed in the covered area. If the Contractor performs construction work in a geographical area located outside of the covered area, the Contractor shall apply the goals established for the geographical area where the work is actually performed. Goals are published periodically in the Federal Register in notice form, and these notices may be obtained from any Office of Federal Contract Compliance Programs office.

(c) The Contractor's compliance with Executive Order 11246, as amended, and the regulations in 41 CFR 60-4 shall be based on (1) its implementation of the Equal Opportunity clause, (2) specific affirmative action obligations required by the clause entitled "Affirmative Action Compliance Requirements for Construction," and (3) its efforts to meet the goals. The hours of minority and female employment and training must be substantially uniform throughout the length of the contract, and in each trade. The Contractor shall make a good faith effort to employ minorities and women evenly on each of its projects. The transfer of minority or female employees or trainees from Contractor to Contractor, or from project to project, for the sole purpose of meeting the Contractor's goals shall be a violation of the contract, Executive Order 11246, as amended, and the regulations in 41 CFR 60-4. Compliance with the goals will be measured against the total work hours performed.

(d) The Contractor shall provide written notification to the Deputy Assistant Secretary for Federal Contract Compliance, U.S. Department of Labor, within 10 working days following award of any construction subcontract in excess of $10,000 at any tier for construction work under the contract resulting from this solicitation. The notification shall list the --

(1) Name, address, and telephone number of the subcontractor;

(2) Employer's identification number of the subcontractor;

(3) Estimated dollar amount of the subcontract;

(4) Estimated starting and completion dates of the subcontract; and

(5) Geographical area in which the subcontract is to be performed.

(e) As used in this Notice, and in any contract resulting from this solicitation, the "covered area" is North Carolina, Wayne County, Goldsboro.

52.225-10 NOTICE OF BUY AMERICAN ACT/BALANCE OF PAYMENTS PROGRAM REQUIREMENT--CONSTRUCTION MATERIALS (FEB 2000)

(a) Definitions. Construction material, domestic construction material, and foreign construction material, as used in this provision, are defined in the clause of this solicitation entitled “Buy American Act--Balance of Payments Program--Construction Materials” (Federal Acquisition Regulation (FAR) clause 52.225-9).

(b) Requests for determinations of inapplicability. An offeror requesting a determination regarding the inapplicability of the Buy American Act or Balance of Payments Program should submit the request to the Contracting Officer in time to allow a determination before submission of offers. The offeror shall include the information and applicable supporting data required by paragraphs (c) and (d) of the clause at FAR 52.225-9 in the request. If an offeror has not requested a determination regarding the inapplicability of the Buy American Act or Balance of Payments Program before submitting its offer, or has not received a response to a previous request, the offeror shall include the information and supporting data in the offer.

(c) Evaluation of offers. (1) The Government will evaluate an offer requesting exception to the requirements of the Buy American Act or Balance of Payments Program, based on claimed unreasonable cost of domestic construction material, by adding to the offered price the appropriate percentage of the cost of such foreign construction material, as specified in paragraph (b)(3)(i) of the clause at FAR 52.225-9.

(2) If evaluation results in a tie between an offeror that requested the substitution of foreign construction material based on unreasonable cost and an offeror that did not request an exception, the Contracting Officer will award to the offeror that did not request an exception based on unreasonable cost.

(d) Alternate offers.

(1) When an offer includes foreign construction material not listed by the Government in this solicitation in paragraph (b)(2) of the clause at FAR 52.225-9, the offeror also may submit an alternate offer based on use of equivalent domestic construction material.

(2) If an alternate offer is submitted, the offeror shall submit a separate Standard Form 1442 for the alternate offer, and a separate price comparison table prepared in accordance with paragraphs (c) and (d) of the clause at FAR 52.225-9 for the offer that is based on the use of any foreign construction material for which the Government has not yet determined an exception applies.

(3) If the Government determines that a particular exception requested in accordance with paragraph (c) of the clause at FAR 52.225-9 does not apply, the Government will evaluate only those offers based on use of the equivalent domestic construction material, and the offeror shall be required to furnish such domestic construction material. An offer based on use of the foreign construction material for which an exception was requested--

(i) Will be rejected as nonresponsive if this acquisition is conducted by sealed bidding; or

(ii) May be accepted if revised during negotiations.

(End of provision)

52.232-13 NOTICE OF PROGRESS PAYMENTS (APR 1984)

The need for customary progress payments conforming to the regulations in Subpart 32.5 of the Federal Acquisition Regulation (FAR) will not be considered as a handicap or adverse factor in the award of the contract. The Progress Payments clause included in this solicitation will be included in any resulting contract, modified or altered if necessary in accordance with subsection 52.232-16 and its Alternate I of the FAR. Even though the clause is included in the contract, the clause shall be inoperative during any time the contractor's accounting system and controls are determined by the Government to be inadequate for segregation and accumulation of contract costs.

52.232-4006 I SUBJECT TO AVAILABILITY OF FUNDS STATEMENT (JUL 1990 SASEN-MM) (Ref. AFARS 1.602-2)

This is a high priority requirement as defined in Army Federal Acquisition Regulation (AFAR) Supplement 1.602-2. Subject to the availability of funds, the accounting classification will be: 57 2 3300 208 9021 P321 3230 S09133. This statement is not a commitment of funds. Funds are not presently available for this acquisition. No contract award will be made until appropriated funds are made available from which payment for contract purposes can be made.

(End of provision)

52.233-2 SERVICE OF PROTEST (AUG 1996)

(a) Protests, as defined in section 33.101 of the Federal Acquisition Regulation, that are filed directly with an agency, and copies of any protests that are filed with the General Accounting Office (GAO), shall be served on the Contracting Officer (addressed as follows) by obtaining written and dated acknowledgment of receipt from:

US Army Corps of Engineers, Savannah District
ATTN: Contracting Officer, CESAS-CT-C
100 West Oglethorpe Ave
Savannah, Georgia 31401-3640

(b) The copy of any protest shall be received in the office designated above within one day of filing a protest with the GAO.

(End of provision)

52.236-27 SITE VISIT (CONSTRUCTION) (FEB 1995)

(a) The clauses at 52.236-2, Differing Site Conditions, and 52.236-3, Site Investigations and Conditions Affecting the Work, will be included in any contract awarded as a result of this solicitation. Accordingly, offerors or quoters are urged and expected to inspect the site where the work will be performed.

(b) Site visits may be arranged during normal duty hours by contacting:
Name: Mr. J. Tom Dickens
Address: U.S. Army Corps of Engineers
Seymour Johnson AFB
Resident Office
P.O. Box 10508
Goldsboro, NC 27532-0508
Telephone: Commercial: 919-722-5869/5865
Fax: 919-722-5870

52.236-28 PREPARATION OF PROPOSALS--CONSTRUCTION (OCT 1997)

(a) Proposals must be (1) submitted on the forms furnished by the Government or on copies of those forms, and (2) manually signed. The person signing a proposal must initial each erasure or change appearing on any proposal form.

(b) The proposal form may require offerors to submit proposed prices for one or more items on various bases, including--

(1) Lump sum price;

(2) Alternate prices;

(3) Units of construction; or

(4) Any combination of paragraphs (b)(1) through (b)(3) of this provision.

(c) If the solicitation requires submission of a proposal on all items, failure to do so may result in the proposal being rejected without further consideration. If a proposal on all items is not required, offerors should insert the words “no proposal” in the space provided for any item on which no price is submitted.

(d) Alternate proposals will not be considered unless this solicitation authorizes their submission.

(End of provision)

52.236-4011 Disclosure of Magnitude of Construction (FAR 36.204 and DFARS 236.204)

The estimated price range for this project is between $1,000,000.00 and $5,000,000.00. .

Section 00120

EVALUATION MANUAL

1. GENERAL

The purpose of this document is to establish a uniform evaluation procedure for the technical evaluation phase of the solicitation based on contractually defined criteria. The Source selection Board will evaluate each proposal individually using the qualitative/quantitative procedures which follow. Each proposal will be reviewed and rated by each of the evaluators. During this process, discrepancies between evaluations will be discussed and resolved within the team. Following the completion of the individual evaluations, a consensus evaluation will be derived.

2. PROPOSAL REQUIREMENTS

2.1 Section 00110 – PART 1, Proposal Submission Requirements and Instructions identifies all the necessary submittal information to be included in the proposals. Proposals which reach the evaluation stage have passed an initial Contracting Division review to assure that they are complete and responsive. All proposals which are provided to the evaluation team will be evaluated and rated.

2.2 Past Performance Questionnaires. Each proposal shall include at least three completed questionnaires from previous offeror projects. If more than three questionnaires are returned, the evaluation team shall evaluate all questionnaires. If less than three questionnaires are returned, the proposal shall receive a rating commensurate with the contractor's performance risk as determined by the evaluation team.

2.3 Relevant Specialized Experience. Each proposal shall submit project information for in-progress or completed projects that are similar in terms of cost, complexity, design or features, that have been constructed by the Offeror to be used for evaluation purposes.

3. INDIVIDUAL PROPOSAL RATING WORKSHEETS

3.1 Worksheets are provided on the following pages that the evaluators will use to review and rate the individual proposals.

3.2 During the consensus evaluation, a single "consensus rating" worksheet shall be completed for each proposal and signed by all the evaluators. It is imperative that comments and supporting rationale for the rating assigned be included on this consensus sheet.

3.3 Comments are required to support all ratings.

4. RATING METHODOLOGY

4.1 Proposals will be evaluated in each Evaluation Factor based on the following rating scheme:

4.2 **Yes - No Ratings.** Where the specific evaluation sheets indicate a YES – NO Rating these items shall be treated as information items. They are included in the evaluation worksheets to assure a similar focus among the evaluators and to ensure that individual evaluators do not overlook proposal information provided.

4.3 **Go – No Go Ratings.**

4.3.1 **Go.** The technical proposal conforms completely to the solicitation requirements and presents low risk to the Government.

4.3.2 **No-Go.** The proposal does not meet the minimum levels of acceptability and presents an unacceptably high risk to the Government.

5. EVALUATION FACTORS

5.1 **FACTOR 1-1: OFFEROR PAST PERFORMANCE.** The Government will evaluate the satisfaction of the customers in the example projects identified by the Offeror and from which Past Performance Evaluation Questionnaires have been received. The Government may contact the points of contact indicated for additional information and to assure validity of the received questionnaires. The Government may contact sources other than those provided by the Offeror for information with respect to past performance. These other sources may include ACASS (Architect-Engineer Contract Administration Support System), CCASS (Construction Contractor Appraisal Support System), telephone interviews, and Government personnel with personal knowledge of the Offeror's performance capability. Offerors may be provided an opportunity to address any negative past performance information about which the offeror has not previously had an opportunity to respond. The following areas of major consideration will be determined from evaluation of all sources of past performance information and an overall rating provided:

5.1.1 Quality of Construction. Based on information provided in the questionnaire and other information, the Government will assess the quality of the actual construction undertaken and the standards of workmanship exhibited by the Offeror's team.

5.1.2 Timeliness of Performance. The Government will evaluate all information available with respect to the Offeror completing past projects within the scheduled completion times.

5.1.3 Documentation. The Government will evaluate all information available with respect to the Offeror's level of meeting customer satisfaction on timeliness and quality of the documentation, reports, and other written materials completed by the Offeror on past projects.

5.1.4 Customer Satisfaction. The Government will evaluate all information available with respect to the Offeror's past customer satisfaction, cooperation with customers, and interaction on past projects.

5.1.5 Subcontractor Management. The Government will evaluate all information available with respect to the Offeror's management of subcontractors on past projects.

5.2 FACTOR 1-2: OFFEROR RELEVANT SPECIALIZED EXPERIENCE. The Government will evaluate the example projects provided by the Offeror to evaluate and rate the recent experience of the Offeror in similar construction projects. The example projects are to be specifically related to the renovation of existing buildings, to include those occupied during construction. The example projects which most closely resemble the project identified in this solicitation will receive the highest consideration.

If the Offeror cannot provide suitable relevant experience and the evaluators consider that the information provided indicates that the Offeror has no relevant experience, a determination will be made as to the risk this lack of experience presents to the Government and the rating of GO or NO-GO assigned. Rationale for assignment of either factor shall be fully documented.

6. OVERALL PROPOSAL RATING

6.1 The Government evaluation team will consider all information provided in the proposal individually. Once these individual analyses are completed, the team will meet and determine a rating for each of the evaluation factors by consensus decision.

6.2 Following completion of the consensus rating, each proposal will be assigned a single overall GO or NO-GO rating. This final overall rating, along with ratings on individual factors, will be provided to the Contracting Officer/Source Selection Authority.

6.3 It is the responsibility of the Source Selection Board to provide and document sufficient strengths, weaknesses, and omissions to support the GO or NO-GO rating for each factor as well as the overall rating. Documentation/comments are required for all ratings.

Offeror: _____

Evaluator:_____

PROPOSAL RATING WORKSHEET

FACTOR 1-1

OFFEROR PAST PERFORMANCE

1. General: Evaluators will use this factor to evaluate the success of the Offeror based on the satisfaction of previous customers and clients as illustrated on the completed questionnaires. These completed questionnaires shall be used as a basis to begin the evaluation of this factor.

Has Government Received Three Completed Questionnaires for this Offeror ? ____ YES ___ NO

Do All the Questionnaires Received Reflect Projects Completed or Under Construction Within the Last 3 Years?

____ YES ____NO

2. CCASS Ratings: Contract Specialist shall provide CCASS Ratings for the Offeror.
Construction Rating (CCASS)
Number of Ratings: Outstanding _____
Above Average _____
Satisfactory _____
Marginal _____
Unsatisfactory _____

3. OVERALL RATING. Select an appropriate overall rating for the CCASS evaluation information available.
/__/ GO

/__/ NO – GO

Comments to support the OVERALL RATING:

Offeror: _____

Evaluator:_____

PROPOSAL RATING WORKSHEET
FACTOR 1-1
OFFEROR PAST PERFORMANCE
(Continued)

3. Quality of Construction: Evaluators shall carefully review the information provided in the completed questionnaires to ascertain a level of customer satisfaction with the quality of the past projects. Based on that review, provide a rating for the Quality of the Past Completed Projects below. Include a listing of any apparent weaknesses or strengths of the Offeror and the proposed project team.

/__/ GO

/__/ NO – GO

Strengths: Include a listing of any identified or obvious strengths of the Offeror with respect to final product quality.

Weaknesses: Include a listing of any identified or obvious weaknesses of the Offeror with respect to final product quality.

Other: Include any other comments/rationale to support the overall rating provided for this Offeror.

Offeror: _____

Evaluator:_____

PROPOSAL RATING WORKSHEET
FACTOR 1-1
OFFEROR PAST PERFORMANCE
(Continued)

4. Timeliness of Performance: Evaluators shall carefully review the information provided in the completed questionnaires to ascertain customer satisfaction with the timeliness of the past projects. Based on that review, provide a rating for the Timeliness of the Past Completed Projects below. Include a listing of any apparent weaknesses or strengths of the Offeror and the proposed project team.

/__/ GO

/__/ NO – GO

Strengths: Include a listing of any identified or obvious strengths of the Offeror with respect to timeliness.

Weaknesses: Include a listing of any identified or obvious weaknesses of the Offeror with respect to timeliness.

Other: Include any other comments/rationale to support the overall rating provided for this Offeror.

Offeror: _____

Evaluator:_____

PROPOSAL RATING WORKSHEET
FACTOR 1-1

OFFEROR PAST PERFORMANCE
(Continued)

5. Offeror Documentation: Evaluators shall carefully review the information provided in the completed questionnaires to ascertain a level of customer satisfaction with the documentation, reports, and other written materials completed by the Offeror on the past projects. Based on that review, provide a rating for the Offeror Documentation Skills of the Past Completed Projects below. Include a listing of any apparent weaknesses or strengths of the Offeror and the proposed project team.

/__/ GO

/__/ NO – GO

Strengths: Include a listing of any identified or obvious strengths of the Offeror with respect to Offeror documentation and production of written materials.

Weaknesses: Include a listing of any identified or obvious weaknesses of the Offeror with respect to Offeror documentation and production of written materials.

Other: Include any other comments/rationale to support the overall rating provided for this offeror.

Offeror: _____

Evaluator:_____

PROPOSAL RATING WORKSHEET
FACTOR 1-1
OFFEROR PAST PERFORMANCE

(Continued)

6. Offeror Customer Satisfaction: Evaluators shall carefully review the information provided in the completed questionnaires to ascertain a level of customer satisfaction with the Offeror's cooperation and interactions on the past projects. Based on that review, provide a rating for the Offeror's cooperation on the Past Completed Projects below. Include a listing of any apparent weaknesses or strengths of the Offeror.

/__/ GO

/__/ NO – GO

Strengths: Include a listing of any identified or obvious strengths of the Offeror with respect to Customer/Client Satisfaction.

Weaknesses: Include a listing of any identified or obvious weaknesses of the Offeror with respect to Customer/Client Satisfaction.

Other: Include any other comments/rationale to support the overall rating provided for this Offeror.

Offeror: _____

Evaluator:_____

PROPOSAL RATING WORKSHEET
FACTOR 1-1
OFFEROR PAST PERFORMANCE
(Continued)

7. Offeror Subcontractor Management: Evaluators shall carefully review the information provided in the completed questionnaires to ascertain a level of customer satisfaction with the Offeror's Management of Subcontractors on the past projects. Based on that review, provide a rating for the Offeror's Subcontractor Management Skills on the Past Completed Projects below. Include a listing of any apparent weaknesses or strengths of the Offeror and the proposed project team.

/__/ GO

/__/ NO – GO

Strengths: Include a listing of any identified or obvious strengths of the Offeror with respect to Subcontractor Management.

Weaknesses: Include a listing of any identified or obvious weaknesses of the Offeror with respect to Offeror Subcontractor Management.

Other: Include any other comments/rationale to support the overall rating provided for this Offeror.

Offeror: _____

Evaluator:_____

PROPOSAL RATING WORKSHEET

FACTOR 1-2

OFFEROR SPECIALIZED RELEVANT EXPERIENCE

1. General: Evaluators will use this item to document receipt of example project listings with the Proposal Information.

Does the Proposal Include an Example Project Listing with Suitable Explanation? ____ YES ___ NO

2. Evaluate the Offerors provided example projects. Are these projects similar in construction with this solicitation requirements? Are the example projects related to the renovation of existing buildings, to include those occupied during construction. Was the Offeror in charge of the example projects? Was it a key subcontractor?

/__/ GO

/__/ NO – GO

Strengths: Include a listing of any identified or obvious strengths the Offeror demonstrated in the example projects included in the proposal.

Weaknesses: Include a listing of any identified or obvious weaknesses the Offeror demonstrated in the example projects included in the proposal.

Other: Include any other comments with respect to the example projects included in the proposal.

Offeror: _____

Evaluator:_____

SUMMARY RATING CHART			
Item No.	**Description**	**Rating***	**Comments**
1.	Questionnaire Receipt	YES/ NO	
2.	CCASS Rating		
3.	Quality of Construction		
4.	Timeliness of Performance		
5.	Documentation		
6.	Customer Satisfaction		
7.	Subcontractor Management		
	OVERALL FACTOR 1-1 RATING		
1.	Does the Proposal Include an Example Project Listing with Suitable Explanation?	YES/ NO	
2.	Offeror's Specialized Relevant Experience		
	OVERALL FACTOR 1-2 RATING		
OVERALL PROPOSAL RATING			

* Ratings may be either:

GO or **NO – GO**

Offeror: _____

Evaluator:_____

PHASE 1 SUMMARY RATING

FACTOR 1-1 OFFEROR PAST PERFORMANCE

STRENGTHS:

WEAKNESSES:

FACTOR 1-2 OFFEROR SPECIALIZED RELEVANT EXPERIENCE

STRENGTHS:

WEAKNESSES:

Offeror: _____

CONSENSUS SUMMARY RATING CHART

FACTOR No.	Description	Board Member 1	Board Member 2	Board Member 3	Board Member 4	Board Member 5	CONSENSUS
1-1	**Offeror Past Performance**						.
	CCASS Rating						
	Quality of Construction						
	Timeliness of Performance						
	Documentation						
	Customer Satisfaction						
	Subcontractor Management						
1-2	**Offeror Specialized Relevant Experience**						.
OVERALL RATING**							

Ratings may be either: **GO** or **NO – GO**

* Evaluators shall consider the ratings in the various items shown to determine a suitable overall rating. The overall rating cannot be an average, mode, or median of the ratings of the factors. A final rating must be reached based on discussions and a consensus among the evaluators

_____ Board Member 1

_____ Board Member 2

_____ _____
Board Member 3 Board Member 4

_____ _____Board
Member 5 Board Chairperson

Offeror: _____

CONSENSUS SUMMARY RATING

FACTOR 1-1 OFFEROR PAST PERFORMANCE

STRENGTHS:

WEAKNESSES:

FACTOR 1-2 OFFEROR RELEVANT SPECIALIZED EXPERIENCE

STRENGTHS:

WEAKNESSES:

SECTION 00600 Representations & Certifications

CLAUSES INCORPORATED BY FULL TEXT

52.203-2 CERTIFICATE OF INDEPENDENT PRICE DETERMINATION (APR 1985)

(a) The offeror certifies that --

(1) The prices in this offer have been arrived at independently, without, for the purpose of restricting competition, any consultation, communication, or agreement with any other offeror or competitor relating to –

(i) Those prices,

(ii) The intention to submit an offer, or

(iii) The methods of factors used to calculate the prices offered:

(2) The prices in this offer have not been and will not be knowingly disclosed by the offeror, directly or indirectly, to any other offeror or competitor before bid opening (in the case of a sealed bid solicitation) or contract award (in the case of a negotiated solicitation) unless otherwise required by law; and

(3) No attempt has been made or will be made by the offeror to induce any other concern to submit or not to submit an offer for the purpose of restricting competition.

(b) Each signature on the offer is considered to be a certification by the signatory that the signatory --

(1) Is the person in the offeror's organization responsible for determining the prices offered in this bid or proposal, and that the signatory has not participated and will not participate in any action contrary to subparagraphs (a)(1) through (a)(3) of this provision; or

(2) (i) Has been authorized, in writing, to act as agent for the following principals in certifying that those principals have not participated, and will not participate in any action contrary to subparagraphs (a)(1) through (a)(3) of this provison _____ (insert full name of person(s) in the offeror's organization responsible for determining the prices offered in this bid or proposal, and the title of his or her position in the offeror's organization);

(ii) As an authorized agent, does certify that the principals named in subdivision (b)(2)(i) above have not participated, and will not participate, in any action contrary to subparagraphs (a)(1) through (a)(3) above; and

(iii) As an agent, has not personally participated, and will not participate, in any action contrary to subparagraphs (a)(1) through (a)(3) of this provision.

(c) If the offeror deletes or modifies subparagraph (a)(2) of this provision, the offeror must furnish with its offer a signed statement setting forth in detail the circumstances of the disclosure.

(End of provision)

52.203-11 CERTIFICATION AND DISCLOSURE REGARDING PAYMENTS TO INFLUENCE CERTAIN FEDERAL TRANSACTIONS (APR 1991)

(a) The definitions and prohibitions contained in the clause, at FAR 52.203-12, Limitation on Payments to Influence Certain Federal Transactions, included in this solicitation, are hereby incorporated by reference in paragraph (b) of

this Certification.

(b) The offeror, by signing its offer, hereby certifies to the best of his or her knowledge and belief that on or after December 23, 1989,--

(1) No Federal appropriated funds have been paid or will be paid to any person for influencing or attempting to influence an officer or employee of any agency, a Member of Congress, an officer or employee of Congress, or an employee of a Member of Congress on his or her behalf in connection with the awarding of any Federal contract, the making of any Federal grant, the making of any Federal loan, the entering into of any cooperative agreement, and the extension, continuation, renewal, amendment or modification of any Federal contract, grant, loan, or cooperative agreement;

(2) If any funds other than Federal appropriated funds (including profit or fee received under a covered Federal transaction) have been paid, or will be paid to any person for influencing or attempting to influence an officer or employee of any agency, a Member of Congress, an officer or employee of Congress or an employee of a Member of Congress on his or her behalf in connection with this solicitation, the offeror shall complete and submit, with its offer, OMB standard form LLL, Disclosure of Lobbying Activities, to the Contracting Officer; and

(3) He or she will include the language of this certification in all subcontract awards at any tier and require that all recipients of subcontract awards in excess of $100,000 shall certify and disclose accordingly.

(c) Submission of this certification and disclosure is a prerequisite for making or entering into this contract imposed by section 1352, Title 31, United States Code. Any person who makes an expenditure prohibited under this provision, shall be subject to a civil penalty of not less than $10,000, and not more than $100,000, for each such failure.

(End of provision)

52.204-3 TAXPAYER IDENTIFICATION (OCT 1998)

(a) Definitions.

“Common parent,” as used in this provision, means that corporate entity that owns or controls an affiliated group of corporations that files its Federal income tax returns on a consolidated basis, and of which the offeror is a member.

“Taxpayer Identification Number (TIN),” as used in this provision, means the number required by the Internal Revenue Service (IRS) to be used by the offeror in reporting income tax and other returns. The TIN may be either a Social Security Number or an Employer Identification Number.

(b) All offerors must submit the information required in paragraphs (d) through (f) of this provision to comply with debt collection requirements of 31 U.S.C. 7701(c) and 3325(d), reporting requirements of 26 U.S.C. 6041, 6041A, and 6050M, and implementing regulations issued by the IRS. If the resulting contract is subject to the payment reporting requirements described in Federal Acquisition Regulation (FAR) 4.904, the failure or refusal by the offeror to furnish the information may result in a 31 percent reduction of payments otherwise due under the contract.

(c) The TIN may be used by the Government to collect and report on any delinquent amounts arising out of the offeror's relationship with the Government (31 U.S.C. 7701(c)(3)). If the resulting contract is subject to the payment reporting requirements described in FAR 4.904, the TIN provided hereunder may be matched with IRS records to verify the accuracy of the offeror's TIN.

(d) Taxpayer Identification Number (TIN).

___ TIN:._____

___ TIN has been applied for.

___ TIN is not required because:

___ Offeror is a nonresident alien, foreign corporation, or foreign partnership that does not have income effectively connected with the conduct of a trade or business in the United States and does not have an office or place of business or a fiscal paying agent in the United States;

___ Offeror is an agency or instrumentality of a foreign government;

___ Offeror is an agency or instrumentality of the Federal Government.

(e) Type of organization.

___ Sole proprietorship;

___ Partnership;

___ Corporate entity (not tax-exempt);

___ Corporate entity (tax-exempt);

___ Government entity (Federal, State, or local);

___ Foreign government;

___ International organization per 26 CFR 1.6049-4;

___ Other _____

(f) Common parent.

___ Offeror is not owned or controlled by a common parent as defined in paragraph (a) of this provision.

___ Name and TIN of common parent:

Name _____

TIN _____

(End of provision)

52.204-5 WOMEN-OWNED BUSINESS (OTHER THAN SMALL BUSINESS) (MAY 1999)

(a) Definition. Women-owned business concern, as used in this provision, means a concern that is at least 51 percent owned by one or more women; or in the case of any publicly owned business, at least 51 percent of its stock is owned by one or more women; and whose management and daily business operations are controlled by one or more women.

(b) Representation. [Complete only if the offeror is a women-owned business concern and has not represented itself as a small business concern in paragraph (b)(1) of FAR 52.219-1, Small Business Program Representations, of this solicitation.] The offeror represents that it ( ) is a women-owned business concern.

(End of provision)

52.209-5 CERTIFICATION REGARDING DEBARMENT, SUSPENSION, PROPOSED DEBARMENT, AND

OTHER RESPONSIBILITY MATTERS (APR 2001)

(a)(1) The Offeror certifies, to the best of its knowledge and belief, that--

(i) The Offeror and/or any of its Principals--

(A) Are ( ) are not ( ) presently debarred, suspended, proposed for debarment, or declared ineligible for the award of contracts by any Federal agency;

(B) Have ( ) have not ( ), within the three-year period preceding this offer, been convicted of or had a civil judgment rendered against them for: commission of fraud or a criminal offense in connection with obtaining, attempting to obtain, or performing a public (Federal, state, or local) contract or subcontract; violation of Federal or state antitrust statutes relating to the submission of offers; or commission of embezzlement, theft, forgery, bribery, falsification or destruction of records, making false statements, tax evasion, or receiving stolen property;

(C) Are ( ) are not ( ) presently indicted for, or otherwise criminally or civilly charged by a governmental entity with, commission of any of the offenses enumerated in subdivision (a)(1)(i)(B) of this provision; and

(D) Have ( ) have not ( ), within a three-year period preceding this offer, been convicted of or had a civil judgment rendered against them for: commission of fraud or a criminal offense in connection with obtaining, attempting to obtain, or performing a public (Federal, state, or local) contract or subcontract; violation of Federal or state antitrust statutes relating to the submission of offers; or commission of embezzlement, theft, forgery, bribery, falsification or destruction of records, making false statements, tax evasion, or receiving stolen property; and

(E) Are ( ) are not ( ) presently indicted for, or otherwise criminally or civilly charged by a governmental entity with, commission of any of the offenses enumerated in subdivision (a)(1)(i)(D) of this provision.

(ii)(A) The offeror, aside from the offenses enumerated in paragraphs (a)(1)(i)(A), (B), and (C) of this provision, has ( ) has not ( ) within the past three years, relative to tax, labor and employment, environmental, antitrust, or consumer protection laws--

(1) Been convicted of a Federal or state felony (or has any Federal or state felony indictments currently pending against them); or

(2) Had a Federal court judgment in a civil case brought by the United States rendered against them; or

(3) Had an adverse decision by a Federal administrative law judge, board, or commission indicating a willful violation of law.

(B) If the offeror has responded affirmatively, the offeror shall provide additional information if requested by the Contracting Officer; and

(iii) The Offeror has ( ) has not ( ), within a three-year period preceding this offer, had one or more contracts terminated for default by any Federal agency.

(2) "Principals," for the purposes of this certification, means officers; directors; owners; partners; and, persons having primary management or supervisory responsibilities within a business entity (e.g., general manager; plant manager; head of a subsidiary, division, or business segment, and similar positions).

THIS CERTIFICATION CONCERNS A MATTER WITHIN THE JURISDICTION OF AN AGENCY OF THE UNITED STATES AND THE MAKING OF A FALSE, FICTITIOUS, OR FRAUDULENT CERTIFICATION MAY RENDER THE MAKER SUBJECT TO PROSECUTION UNDER SECTION 1001, TITLE 18, UNITED STATES CODE.

(b) The Offeror shall provide immediate written notice to the Contracting Officer if, at any time prior to contract award, the Offeror learns that its certification was erroneous when submitted or has become erroneous by reason of changed circumstances.

(c) A certification that any of the items in paragraph (a) of this provision exists will not necessarily result in withholding of an award under this solicitation. However, the certification will be considered in connection with a determination of the Offeror's responsibility. Failure of the Offeror to furnish a certification or provide such additional information as requested by the Contracting Officer may render the Offeror nonresponsible.

(d) Nothing contained in the foregoing shall be construed to require establishment of a system of records in order to render, in good faith, the certification required by paragraph (a) of this provision. The knowledge and information of an Offeror is not required to exceed that which is normally possessed by a prudent person in the ordinary course of business dealings.

(e) The certification in paragraph (a) of this provision is a material representation of fact upon which reliance was placed when making award. If it is later determined that the Offeror knowingly rendered an erroneous certification, in addition to other remedies available to the Government, the Contracting Officer may terminate the contract resulting from this solicitation for default.

(End of provision)

52.219-1 SMALL BUSINESS PROGRAM REPRESENTATIONS (MAY 2001) ALTERNATE I (OCT 2000) & ALTERNATE II (OCT 2000)

(a)(1) The North American Industry Classification System (NAICS) code for this acquisition is 233320.

(2) The small business size standard is $27.5 M.

(3) The small business size standard for a concern which submits an offer in its own name, other than on a construction or service contract, but which proposes to furnish a product which it did not itself manufacture, is 500 employees.

(b) Representations. (1) The offeror represents as part of its offer that it ( ) is, ( ) is not a small business concern.

(2) (Complete only if the offeror represented itself as a small business concern in paragraph (b)(1) of this provision.) The offeror represents, for general statistical purposes, that it ( ) is, ( ) is not a small disadvantaged business concern as defined in 13 CFR 124.1002.

(3) (Complete only if the offeror represented itself as a small business concern in paragraph (b)(1) of this provision.) The offeror represents as part of its offer that it ( ) is, ( ) is not a women-owned small business concern.

(4) (Complete only if the offeror represented itself as a small business concern in paragraph (b)(1) of this provision.) The offeror represents as part of its offer that it ( ) is, ( ) is not a veteran-owned small business concern.

(5) (Complete only if the offeror represented itself as a veteran-owned small business concern in paragraph (b)(4) of this provision.) The offeror represents as part of its offer that it ( ) is, ( ) is not a service-disabled veteran-owned small business concern.

(6) (Complete only if offeror represented itself as small business concern in paragraph (b)(1) of this provision). The offeror represents, as part of its offer, that--

(i) It ( ) is, ( ) is not a HUBZone small business concern listed, on the date of this representation, on the List of Qualified HUBZone Small Business Concerns maintained by the Small Business Administration, and no material change in ownership and control, principal office, or HUBZone employee percentage has occurred since it was certified by the Small Business Administration in accordance with 13 CFR Part 126; and

(ii) It ( ) is, ( ) is not a joint venture that complies with the requirements of 13 CFR Part 126, and the representation in paragraph (b)(6)(i) of this provision is accurate for the HUBZone small business concern or concerns that are participating in the joint venture. (The offeror shall enter the name or names of the HUBZone small business concern or concerns that are participating in the joint venture: _____.) Each HUBZone small business concern participating in the joint venture shall submit a separate signed copy of the HUBZone representation.

(7) (Complete if offeror represented itself as disadvantaged in paragraph (b)(2) of this provision.) The offeror shall check the category in which its ownership falls:

( ) Black American.

( ) Hispanic American.

( ) Native American (American Indians, Eskimos, Aleuts, or Native Hawaiians).

( ) Asian-Pacific American (persons with origins from Burma, Thailand, Malaysia, Indonesia, Singapore, Brunei, Japan, China, Taiwan, Laos, Cambodia (Kampuchea), Vietnam, Korea, The Philippines, U.S. Trust Territory of the Pacific Islands (Republic of Palau), Republic of the Marshall Islands, Federated States of Micronesia, the Commonwealth of the Northern Mariana Islands, Guam, Samoa, Macao, Hong Kong, Fiji, Tonga, Kiribati, Tuvalu, or Nauru).

( ) Subcontinent Asian (Asian-Indian) American (persons with origins from India, Pakistan, Bangladesh, Sri Lanka, Bhutan, the Maldives Islands, or Nepal).

(c) Definitions. As used in this provision--

Service-disabled veteran-owned small business concern--

(1) Means a small business concern--

(i) Not less than 51 percent of which is owned by one or more service-disabled veterans or, in the case of any publicly owned business, not less than 51 percent of the stock of which is owned by one or more service-disabled veterans; and

(ii) The management and daily business operations of which are controlled by one or more service-disabled veterans or, in the case of a veteran with permanent and severe disability, the spouse or permanent caregiver of such veteran.

(2) Service-disabled veteran means a veteran, as defined in 38 U.S.C. 101(2), with a disability that is service-connected, as defined in 38 U.S.C. 101(16).

Small business concern means a concern, including its affiliates, that is independently owned and operated, not dominant in the field of operation in which it is bidding on Government contracts, and qualified as a small business under the criteria in 13 CFR Part 121 and the size standard in paragraph (a) of this provision.

Veteran-owned small business concern means a small business concern--

(1) Not less than 51 percent of which is owned by one or more veterans (as defined at 38 U.S.C. 101(2)) or, in the case of any publicly owned business, not less than 51 percent of the stock of which is owned by one or more veterans; and

(2) The management and daily business operations of which are controlled by one or more veterans.

Women-owned small business concern means a small business concern --

(1) That is at least 51 percent owned by one or more women; in the case of any publicly owned business, at least 51 percent of the stock of which is owned by one or more women; and

(2) Whose management and daily business operations are controlled by one or more women.

(d) Notice.

(1) If this solicitation is for supplies and has been set aside, in whole or in part, for small business concerns, then the clause in this solicitation providing notice of the set-aside contains restrictions on the source of the end items to be furnished.

(2) Under 15 U.S.C. 645(d), any person who misrepresents a firm's status as a small, HUBZone small, small disadvantaged, or women-owned small business concern in order to obtain a contract to be awarded under the preference programs established pursuant to section 8(a), 8(d), 9, or 15 of the Small Business Act or any other provision of Federal law that specifically references section 8(d) for a definition of program eligibility, shall--

(i) Be punished by imposition of fine, imprisonment, or both;

(ii) Be subject to administrative remedies, including suspension and debarment; and

(iii) Be ineligible for participation in programs conducted under the authority of the Act.

(End of provision)

52.219-19 SMALL BUSINESS CONCERN REPRESENTATION FOR THE SMALL BUSINESS COMPETITIVENESS DEMONSTRATION PROGRAM (OCT 2000)

(a) Definition.

"Emerging small business" as used in this solicitation, means a small business concern whose size is no greater than 50 percent of the numerical size standard applicable to the North American Industry Classification System (NAICS) code assigned to a contracting opportunity.

(b) [Complete only if the Offeror has represented itself under the provision at 52.219-1 as a small business concern under the size standards of this solicitation.] The Offeror [ ] is, [ ] is not an emerging small business.

(c) (Complete only if the Offeror is a small business or an emerging small business, indicating its size range.)

Offeror's number of employees for the past 12 months (check this column if size standard stated in solicitation is expressed in terms of number of employees) or Offeror's average annual gross revenue for the last 3 fiscal years (check this column if size standard stated in solicitation is expressed in terms of annual receipts). (Check one of the following.)

No. of Employees	Avg. Annual Gross Revenues
____ 50 or fewer	____ $1 million or less
____ 51 - 100	____ $1,000,001 - $2 million
____ 101 - 250	____ $2,000,001 - $3.5 million
____ 251 - 500	____ $3,500,001 - $5 million
____ 501 - 750	____ $5,000,001 - $10 million

____ 751 - 1,000 ____ $10,000,001 - $17 million

____ Over 1,000 ____ Over $17 million

(End of provision)

52.219-21 SMALL BUSINESS SIZE REPRESENTATION FOR TARGETED INDUSTRY CATEGORIES UNDER THE SMALL BUSINESS COMPETITIVENESS DEMONSTRATION PROGRAM (MAY 1999)

(Complete only if the Offeror has represented itself under the provision at 52.219-1 as a small business concern under the size standards of this solicitation.)

Offeror's number of employees for the past 12 months (check this column if size standard stated in solicitation is expressed in terms of number of employees) or Offeror's average annual gross revenue for the last 3 fiscal years (check this column if size standard stated in solicitation is expressed in terms of annual receipts). (Check one of the following.)

No. of Employees Avg. Annual Gross Revenues

____ 50 or fewer ____ $1 million or less

____ 51 - 100 ____ $1,000,001 - $2 million

____ 101 - 250 ____ $2,000,001 - $3.5 million

____ 251 - 500 ____ $3,500,001 - $5 million

____ 501 - 750 ____ $5,000,001 - $10 million

____ 751 - 1,000 ____ $10,000,001 - $17 million

____ 17 million

(End of provision)

52.222-22 PREVIOUS CONTRACTS AND COMPLIANCE REPORTS (FEB 1999)

The offeror represents that --

(a) [ ] It has, [ ] has not participated in a previous contract or subcontract subject to the Equal Opportunity clause of this solicitation;

(b) [ ] It has, [ ] has not, filed all required compliance reports; and

(c) Representations indicating submission of required compliance reports, signed by proposed subcontractors, will be obtained before subcontract awards.

(End of provision)

52.223-4 RECOVERED MATERIAL CERTIFICATION (OCT 1997)

As required by the Resource Conservation and Recovery Act of 1976 (42 U.S.C. 6962(c)(3)(A)(i)), the offeror certifies, by signing this offer, that the percentage of recovered materials to be used in the performance of the contract will be at least the amount required by the applicable contract specifications.

52.223-13 CERTIFICATION OF TOXIC CHEMICAL RELEASE REPORTING (OCT 2000)

(a) Submission of this certification is a prerequisite for making or entering into this contract imposed by Executive Order 12969, August 8, 1995.

(b) By signing this offer, the offeror certifies that--

(1) As the owner or operator of facilities that will be used in the performance of this contract that are subject to the filing and reporting requirements described in section 313 of the Emergency Planning and Community Right-to-Know Act of 1986 (EPCRA) (42 U.S.C. 11023) and section 6607 of the Pollution Prevention Act of 1990 (PPA) (42 U.S.C. 13106), the offeror will file and continue to file for such facilities for the life of the contract the Toxic Chemical Release Inventory Form (Form R) as described in sections 313(a) and (g) of EPCRA and section 6607 of PPA; or

(2) None of its owned or operated facilities to be used in the performance of this contract is subject to the Form R filing and reporting requirements because each such facility is exempt for at least one of the following reasons: (Check each block that is applicable.)

[ ] (i) The facility does not manufacture, process or otherwise use any toxic chemicals listed under section 313(c) of EPCRA, 42 U.S.C. 11023(c);

[ ] (ii) The facility does not have 10 or more full-time employees as specified in section 313.(b)(1)(A) of EPCRA 42 U.S.C. 11023(b)(1)(A);

[ ] (iii) The facility does not meet the reporting thresholds of toxic chemicals established under section 313(f) of EPCRA, 42 U.S.C. 11023(f) (including the alternate thresholds at 40 CFR 372.27, provided an appropriate certification form has been filed with EPA);

[ ] (iv) The facility does not fall within Standard Industrial Classification Code (SIC) major groups 20 through 39 or their corresponding North American Industry Classification System (NAICS) sectors 31 through 33; or

[ ] (v) The facility is not located within any State of the United States, the District of Columbia, the Commonwealth of Puerto Rico, Guam, American Samoa, the United States Virgin Islands, the Northern Mariana Islands, or any other territory or possession over which the United States has jurisdiction.

52.230-1 COST ACCOUNTING STANDARDS NOTICES AND CERTIFICATION (JUN 2000)

Note: This notice does not apply to small businesses or foreign governments. This notice is in three parts, identified by Roman numerals I through III.

Offerors shall examine each part and provide the requested information in order to determine Cost Accounting Standards (CAS) requirements applicable to any resultant contract.

If the offeror is an educational institution, Part II does not apply unless the contemplated contract will be subject to full or modified CAS coverage pursuant to 48 CFR 9903.201-2(c)(5) or 9903.201-2(c)(6), respectively.

I. DISCLOSURE STATEMENT--COST ACCOUNTING PRACTICES AND CERTIFICATION

(a) Any contract in excess of $500,000 resulting from this solicitation will be subject to the requirements of the Cost Accounting Standards Board (48 CFR Chapter 99), except for those contracts which are exempt as specified in 48 CFR 9903.201-1.

(b) Any offeror submitting a proposal which, if accepted, will result in a contract subject to the requirements of 48 CFR Chapter 99 must, as a condition of contracting, submit a Disclosure Statement as required by 48 CFR

9903.202. When required, the Disclosure Statement must be submitted as a part of the offeror's proposal under this solicitation unless the offeror has already submitted a Disclosure Statement disclosing the practices used in connection with the pricing of this proposal. If an applicable Disclosure Statement has already been submitted, the offeror may satisfy the requirement for submission by providing the information requested in paragraph (c) of Part I of this provision.

CAUTION: In the absence of specific regulations or agreement, a practice disclosed in a Disclosure Statement shall not, by virtue of such disclosure, be deemed to be a proper, approved, or agreed-to practice for pricing proposals or accumulating and reporting contract performance cost data.

(c) Check the appropriate box below:

(1) Certificate of Concurrent Submission of Disclosure Statement.

The offeror hereby certifies that, as a part of the offer, copies of the Disclosure Statement have been submitted as follows: (i) original and one copy to the cognizant Administrative Contracting Officer (ACO) or cognizant Federal agency official authorized to act in that capacity (Federal official), as applicable, and (ii) one copy to the cognizant Federal auditor.

(Disclosure must be on Form No. CASB DS-1 or CASB DS-2, as applicable. Forms may be obtained from the cognizant ACO or Federal official and/or from the loose-leaf version of the Federal Acquisition Regulation.)

Date of Disclosure Statement: _____ Name and Address of Cognizant ACO or Federal Official Where Filed: _____

The offeror further certifies that the practices used in estimating costs in pricing this proposal are consistent with the cost accounting practices disclosed in the Disclosure Statement.

(2) Certificate of Previously Submitted Disclosure Statement.

The offeror hereby certifies that the required Disclosure Statement was filed as follows:

Date of Disclosure Statement: _____ Name and Address of Cognizant ACO or Federal Official Where Filed: _____

The offeror further certifies that the practices used in estimating costs in pricing this proposal are consistent with the cost accounting practices disclosed in the applicable Disclosure Statement.

(3) Certificate of Monetary Exemption.

The offeror hereby certifies that the offeror, together with all divisions, subsidiaries, and affiliates under common control, did not receive net awards of negotiated prime contracts and subcontracts subject to CAS totaling more than $50 million (of which at least one award exceeded $1 million) in the cost accounting period immediately preceding the period in which this proposal was submitted. The offeror further certifies that if such status changes before an award resulting from this proposal, the offeror will advise the Contracting Officer immediately.

(4) Certificate of Interim Exemption.

The offeror hereby certifies that (i) the offeror first exceeded the monetary exemption for disclosure, as defined in (3) of this subsection, in the cost accounting period immediately preceding the period in which this offer was submitted and (ii) in accordance with 48 CFR 9903.202-1, the offeror is not yet required to submit a Disclosure Statement. The offeror further certifies that if an award resulting from this proposal has not been made within 90 days after the end of that period, the offeror will immediately submit a revised certificate to the Contracting Officer, in the form specified under subparagraph (c)(1) or (c)(2) of Part I of this provision, as appropriate, to verify submission of a completed Disclosure Statement.

CAUTION: Offerors currently required to disclose because they were awarded a CAS-covered prime contract or subcontract of $50 million or more in the current cost accounting period may not claim this exemption (4). Further, the exemption applies only in connection with proposals submitted before expiration of the 90-day period following the cost accounting period in which the monetary exemption was exceeded.

II. COST ACCOUNTING STANDARDS--ELIGIBILITY FOR MODIFIED CONTRACT COVERAGE

If the offeror is eligible to use the modified provisions of 48 CFR 9903.201-2(b) and elects to do so, the offeror shall indicate by checking the box below. Checking the box below shall mean that the resultant contract is subject to the Disclosure and Consistency of Cost Accounting Practices clause in lieu of the Cost Accounting Standards clause.

( ) The offeror hereby claims an exemption from the Cost Accounting Standards clause under the provisions of 48 CFR 9903.201-2(b) and certifies that the offeror is eligible for use of the Disclosure and Consistency of Cost Accounting Practices clause because during the cost accounting period immediately preceding the period in which this proposal was submitted, the offeror received less than $50 million in awards of CAS-covered prime contracts and subcontracts. The offeror further certifies that if such status changes before an award resulting from this proposal, the offeror will advise the Contracting Officer immediately.

CAUTION: An offeror may not claim the above eligibility for modified contract coverage if this proposal is expected to result in the award of a CAS-covered contract of $50 million or more or if, during its current cost accounting period, the offeror has been awarded a single CAS-covered prime contract or subcontract of $25 million or more.

III. ADDITIONAL COST ACCOUNTING STANDARDS APPLICABLE TO EXISTING CONTRACTS

The offeror shall indicate below whether award of the contemplated contract would, in accordance with subparagraph (a)(3) of the Cost Accounting Standards clause, require a change in established cost accounting practices affecting existing contracts and subcontracts.

( ) YES ( ) NO

(End of clause)

252.209-7001 DISCLOSURE OF OWNERSHIP OR CONTROL BY THE GOVERNMENT OF A TERRORIST COUNTRY (MAR 1998)

(a) "Definitions."

As used in this provision --

(a) "Government of a terrorist country" includes the state and the government of a terrorist country, as well as any political subdivision, agency, or instrumentality thereof.

(2) "Terrorist country" means a country determined by the Secretary of State, under section 6(j)(1)(A) of the Export Administration Act of 1979 (50 U.S.C. App. 2405(j)(i)(A)), to be a country the government of which has repeatedly provided support for such acts of international terrorism. As of the date of this provision, terrorist countries include: Cuba, Iran, Iraq, Libya, North Korea, Sudan, and Syria.

(3) "Significant interest" means --

(i) Ownership of or beneficial interest in 5 percent or more of the firm's or subsidiary's securities. Beneficial interest includes holding 5 percent or more of any class of the firm's securities in "nominee shares," "street names," or some other method of holding securities that does not disclose the beneficial owner;

(ii) Holding a management position in the firm, such as a director or officer;

(iii) Ability to control or influence the election, appointment, or tenure of directors or officers in the firm;

(iv) Ownership of 10 percent or more of the assets of a firm such as equipment, buildings, real estate, or other tangible assets of the firm; or

(v) Holding 50 percent or more of the indebtness of a firm.

(b) "Prohibition on award."

In accordance with 10 U.S.C. 2327, no contract may be awarded to a firm or a subsidiary of a firm if the government of a terrorist country has a significant interest in the firm or subsidiary or, in the case of a subsidiary, the firm that owns the subsidiary, unless a waiver is granted by the Secretary of Defense.

(c) "Disclosure."

If the government of a terrorist country has a significant interest in the Offeror or a subsidiary of the Offeror, the Offeror shall disclosure such interest in an attachment to its offer. If the Offeror is a subsidiary, it shall also disclose any significant interest the government of a terrorist country has in any firm that owns or controls the subsidiary. The disclosure shall include --

(1) Identification of each government holding a significant interest; and

(2) A description of the significant interest held by each government.

(End of provision)

252.209-7003 COMPLIANCE WITH VETERANS' EMPLOYMENT REPORTING REQUIREMENTS (MAR 1998)

By submission of its offer, the offeror represents that, if it is subject to the reporting requirements of 37 U.S.C. 4212(d) (i.e., the VETS-100 report required by Federal Acquisition Regulation clause 52.222-37, Employment Reports on Disabled Veterans and Veterans of the Vietnam Era), it has submitted the most recent report required by 38 U.S.C. 4212(d).

252.247-7022 REPRESENTATION OF EXTENT OF TRANSPORTATION BY SEA (AUG 1992)

(a) The Offeror shall indicate by checking the appropriate blank in paragraph (b) of this provision whether transportation of supplies by sea is anticipated under the resultant contract. The term supplies is defined in the Transportation of Supplies by Sea clause of this solicitation.

(b) Representation. The Offeror represents that it:

____ (1) Does anticipate that supplies will be transported by sea in the performance of any contract or subcontract resulting from this solicitation.

____ (2) Does not anticipate that supplies will be transported by sea in the performance of any contract or subcontract resulting from this solicitation.

(c) Any contract resulting from this solicitation will include the Transportation of Supplies by Sea clause. If the Offeror represents that it will not use ocean transportation, the resulting contract will also include the Defense FAR Supplement clause at 252.247-7024, Notification of Transportation of Supplies by Sea.

(End of provision)

SECTION 00700 Contract Clauses

CLAUSES INCORPORATED BY REFERENCE:

52.202-1 Alt I	Definitions (May 2001) --Alternate I	MAY 2001
52.203-3	Gratuities	APR 1984
52.203-5	Covenant Against Contingent Fees	APR 1984
52.203-6	Restrictions On Subcontractor Sales To The Government	JUL 1995
52.203-7	Anti-Kickback Procedures	JUL 1995
52.203-8	Cancellation, Rescission, and Recovery of Funds for Illegal or Improper Activity	JAN 1997
52.203-10	Price Or Fee Adjustment For Illegal Or Improper Activity	JAN 1997
52.203-12	Limitation On Payments To Influence Certain Federal Transactions	JUN 1997
52.204-4	Printed or Copied Double-Sided on Recycled Paper	AUG 2000
52.209-6	Protecting the Government's Interest When Subcontracting With Contractors Debarred, Suspended, or Proposed for Debarment	JUL 1995
52.211-15	Defense Priority And Allocation Requirements	SEP 1990
52.215-2	Audit and Records--Negotiation	JUN 1999
52.215-10	Price Reduction for Defective Cost or Pricing Data	OCT 1997
52.215-11	Price Reduction for Defective Cost or Pricing Data--Modifications	OCT 1997
52.215-12	Subcontractor Cost or Pricing Data	OCT 1997
52.215-13	Subcontractor Cost or Pricing Data--Modifications	OCT 1997
52.215-21	Requirements for Cost or Pricing Data or Information Other Than Cost or Pricing Data--Modifications	OCT 1997
52.219-8	Utilization of Small Business Concerns	OCT 2000
52.219-9	Small Business Subcontracting Plan	OCT 2000
52.219-9 Alt II	Small Business Subcontracting Plan (Oct 2000) Alternate II	OCT 2000
52.219-16	Liquidated Damages-Subcontracting Plan	JAN 1999
52.222-1	Notice To The Government Of Labor Disputes	FEB 1997
52.222-3	Convict Labor	AUG 1996
52.222-4	Contract Work Hours and Safety Standards Act - Overtime Compensation	SEP 2000
52.222-6	Davis Bacon Act	FEB 1995
52.222-7	Withholding of Funds	FEB 1988
52.222-8	Payrolls and Basic Records	FEB 1988
52.222-9	Apprentices and Trainees	FEB 1988
52.222-10	Compliance with Copeland Act Requirements	FEB 1988
52.222-11	Subcontracts (Labor Standards)	FEB 1988
52.222-12	Contract Termination-Debarment	FEB 1988
52.222-13	Compliance with Davis-Bacon and Related Act Regulations.	FEB 1988
52.222-14	Disputes Concerning Labor Standards	FEB 1988
52.222-15	Certification of Eligibility	FEB 1988
52.222-21	Prohibition Of Segregated Facilities	FEB 1999
52.222-26	Equal Opportunity	FEB 1999
52.222-27	Affirmative Action Compliance Requirements for Construction	FEB 1999
52.222-35	Affirmative Action For Disabled Veterans And Veterans of the Vietnam Era	APR 1998
52.222-36	Affirmative Action For Workers With Disabilities	JUN 1998
52.222-37	Employment Reports On Disabled Veterans And Veterans Of The Vietnam Era	JAN 1999
52.223-3	Hazardous Material Identification And Material Safety Data	JAN 1997
52.223-5	Pollution Prevention and Right-to-Know Information	APR 1998

52.223-6	Drug Free Workplace	MAY 2001
52.223-14	Toxic Chemical Release Reporting	OCT 2000
52.225-13	Restrictions on Certain Foreign Purchases	JUL 2000
52.226-1	Utilization Of Indian Organizations And Indian-Owned Economic Enterprises	JUN 2000
52.227-1	Authorization and Consent	JUL 1995
52.227-2	Notice And Assistance Regarding Patent And Copyright Infringement	AUG 1996
52.227-4	Patent Indemnity-Construction Contracts	APR 1984
52.228-2	Additional Bond Security	OCT 1997
52.228-5	Insurance - Work On A Government Installation	JAN 1997
52.228-11	Pledges Of Assets	FEB 1992
52.228-12	Prospective Subcontractor Requests for Bonds	OCT 1995
52.228-15	Performance and Payment Bonds--Construction	JUL 2000
52.229-2	North Carolina State and Local Sales and Use Tax	APR 1984
52.229-3	Federal, State And Local Taxes	JAN 1991
52.229-5	Taxes--Contracts Performed In U S Possessions Or Puerto Rico	APR 1984
52.230-2	Cost Accounting Standards	APR 1998
52.230-3	Disclosure And Consistency Of Cost Accounting Practices	APR 1998
52.232-5	Payments under Fixed-Price Construction Contracts	MAY 1997
52.232-17	Interest	JUN 1996
52.232-23	Assignment Of Claims	JAN 1986
52.233-1	Disputes	DEC 1998
52.233-3	Protest After Award	AUG 1996
52.236-2	Differing Site Conditions	APR 1984
52.236-3	Site Investigation and Conditions Affecting the Work	APR 1984
52.236-5	Material and Workmanship	APR 1984
52.236-6	Superintendence by the Contractor	APR 1984
52.236-7	Permits and Responsibilities	NOV 1991
52.236-8	Other Contracts	APR 1984
52.236-9	Protection of Existing Vegetation, Structures, Equipment, Utilities, and Improvements	APR 1984
52.236-10	Operations and Storage Areas	APR 1984
52.236-11	Use and Possession Prior to Completion	APR 1984
52.236-12	Cleaning Up	APR 1984
52.236-13 Alt I	Accident Prevention (Nov 1991) - Alternate I	NOV 1991
52.236-15	Schedules for Construction Contracts	APR 1984
52.236-17	Layout of Work	APR 1984
52.236-21	Specifications and Drawings for Construction	FEB 1997
52.236-26	Preconstruction Conference	FEB 1995
52.242-13	Bankruptcy	JUL 1995
52.242-14	Suspension of Work	APR 1984
52.243-4	Changes	AUG 1987
52.243-5	Changes and Changed Conditions	APR 1984
52.244-5	Competition In Subcontracting	DEC 1996
52.245-2	Government Property (Fixed Price Contracts)	DEC 1989
52.245-3	Identification of Government-Furnished Property	APR 1984
52.245-4	Government-Furnished Property (Short Form)	APR 1984
52.248-3	Value Engineering-Construction	FEB 2000
52.249-2 Alt I	Termination for Convenience of the Government (Fixed-Price) (Sep 1996) - Alternate I	SEP 1996
52.249-10	Default (Fixed-Price Construction)	APR 1984
52.253-1	Computer Generated Forms	JAN 1991
252.201-7000	Contracting Officer's Representative	DEC 1991
252.203-7001	Prohibition On Persons Convicted of Fraud or Other Defense-	MAR 1999

	Contract-Related Felonies	
252.204-7000	Disclosure Of Information	DEC 1991
252.204-7003	Control Of Government Personnel Work Product	APR 1992
252.205-7000	Provisions Of Information To Cooperative Agreement Holders	DEC 1991
252.209-7000	Acquisition From Subcontractors Subject To On-Site Inspection Under The Intermediate Range Nuclear Forces (INF) Treaty	NOV 1995
252.209-7004	Subcontracting With Firms That Are Owned or Controlled By The Government of a Terrorist Country	MAR 1998
252.211-7000	Acquisition Streamlining	DEC 1991
252.215-7000	Pricing Adjustments	DEC 1991
252.219-7003	Small, Small Disadvantaged and Women-Owned Small Business Subcontracting Plan (DOD Contracts)	APR 1996
252.223-7001	Hazard Warning Labels	DEC 1991
252.223-7006	Prohibition On Storage And Disposal Of Toxic And Hazardous Materials	APR 1993
252.225-7012	Preference For Certain Domestic Commodities	AUG 2000
252.225-7031	Secondary Arab Boycott Of Israel	JUN 1992
252.227-7022	Government Rights (Unlimited)	MAR 1979
252.227-7033	Rights in Shop Drawings	APR 1966
252.231-7000	Supplemental Cost Principles	DEC 1991
252.236-7000	Modification Proposals-Price Breakdown	DEC 1991
252.236-7005	Airfield Safety Precautions	DEC 1991
252.242-7000	Postaward Conference	DEC 1991
252.242-7004	Material Management And Accounting System	DEC 2000
252.243-7001	Pricing Of Contract Modifications	DEC 1991
252.243-7002	Requests for Equitable Adjustment	MAR 1998
252.245-7001	Reports Of Government Property	MAY 1994
252.247-7023	Transportation of Supplies by Sea	MAR 2000
252.247-7024	Notification Of Transportation Of Supplies By Sea	MAR 2000

CLAUSES INCORPORATED BY FULL TEXT

52.045-5303 IDENDIFICATION OF GOVERNMENT-FURNISHED PROPERTY

ITEM NO.	QUANTITY	DESCRIPTION .
0001	4 each	Controller, Base Assembly
0002	2 each	Controller, MICRONET Intergrater
0003	4 each	Controller, Microzone II (MZ2)
0004	31each	Controller, VAV, 3 DO”S
0005	2 each	Transmitter, Pressure, Differential
0006	3 each	Stat, Freeze
0007	9 each	Sensor, 5 Foot, Duct Immersion
0008	4 each	Sensor, 6 Inch, Duct Immersion
0009	8 each	Sensor, Current, Relay
0010	31each	Sensor, Duct Mount, Micronet U-Link
0011	31each	Sensor, Room Type, Delux 4 Button, LCD
0012	3 each	Sensor, Room With Override Button
0013	2 each	Supply, Power, 24 VDC
0014	3 each	Transformer, Supply, 75 AMP, 24 VAC

52.215-19 NOTIFICATION OF OWNERSHIP CHANGES (OCT 1997)

(a) The Contractor shall make the following notifications in writing:

(1) When the Contractor becomes aware that a change in its ownership has occurred, or is certain to occur, that could result in changes in the valuation of its capitalized assets in the accounting records, the Contractor shall notify the Administrative Contracting Officer (ACO) within 30 days.

(2) The Contractor shall also notify the ACO within 30 days whenever changes to asset valuations or any other cost changes have occurred or are certain to occur as a result of a change in ownership.

(b) The Contractor shall--

(1) Maintain current, accurate, and complete inventory records of assets and their costs;

(2) Provide the ACO or designated representative ready access to the records upon request;

(3) Ensure that all individual and grouped assets, their capitalized values, accumulated depreciation or amortization, and remaining useful lives are identified accurately before and after each of the Contractor's ownership changes; and

(4) Retain and continue to maintain depreciation and amortization schedules based on the asset records maintained before each Contractor ownership change.

The Contractor shall include the substance of this clause in all subcontracts under this contract that meet the applicability requirement of FAR 15.408(k).

(End of clause)

52.219-4 NOTICE OF PRICE EVALUATION PREFERENCE FOR HUBZONE SMALL BUSINESS CONCERNS (JAN 1999)

(a) Definition. HUBZone small business concern, as used in this clause, means a small business concern that appears on the List of Qualified HUBZone Small Business Concerns maintained by the Small Business Administration.

(b) Evaluation preference. (1) Offers will be evaluated by adding a factor of 10 percent to the price of all offers, except--

(i) Offers from HUBZone small business concerns that have not waived the evaluation preference;

(ii) Otherwise successful offers from small business concerns;

(iii) Otherwise successful offers of eligible products under the Trade Agreements Act when the dollar threshold for application of the Act is exceeded (see 25.402 of the Federal Acquisition Regulation (FAR)); and

(iv) Otherwise successful offers where application of the factor would be inconsistent with a Memorandum of Understanding or other international agreement with a foreign government.

(2) The factor of 10 percent shall be applied on a line item basis or to any group of items on which award may be made. Other evaluation factors described in the solicitation shall be applied before application of the factor.

(3) A concern that is both a HUBZone small business concern and a small disadvantaged business concern will receive the benefit of both the HUBZone small business price evaluation preference and the small disadvantaged business price evaluation adjustment (see FAR clause 52.219-23). Each applicable price evaluation preference or adjustment shall be calculated independently against an offeror's base offer.

These individual preference amounts shall be added together to arrive at the total evaluated price for that offer.

(c) Waiver of evaluation preference. A HUBZone small business concern may elect to waive the evaluation preference, in which case the factor will be added to its offer for evaluation purposes. The agreements in paragraph (d) of this clause do not apply if the offeror has waived the evaluation preference.

___ Offeror elects to waive the evaluation preference.

(d) Agreement. A HUBZone small business concern agrees that in the performance of the contract, in the case of a contract for

(1) Services (except construction), at least 50 percent of the cost of personnel for contract performance will be spent for employees of the concern or employees of other HUBZone small business concerns;

(2) Supplies (other than procurement from a nonmanufacturer of such supplies), at least 50 percent of the cost of manufacturing, excluding the cost of materials, will be performed by the concern or other HUBZone small business concerns;

(3) General construction, at least 15 percent of the cost of the contract performance incurred for personnel will be will be spent on the concern's employees or the employees of other HUBZone small business concerns; or

(4) Construction by special trade contractors, at least 25 percent of the cost of the contract performance incurred for personnel will be spent on the concern's employees or the employees of other HUBZone small business concerns.

(e) A HUBZone joint venture agrees that in the performance of the contract, the applicable percentage specified in paragraph (d) of this clause will be performed by the HUBZone small business participant or participants.

(f) A HUBZone small business concern nonmanufacturer agrees to furnish in performing this contract only end items manufactured or produced by HUBZone small business manufacturer concerns. This paragraph does not apply in connection with construction or service contracts.

(End of clause)

52.225-9 BUY AMERICAN ACT--BALANCE OF PAYMENTS PROGRAM—CONSTRUCTION MATERIALS (FEB 2000)

(a) Definitions. As used in this clause--

Component means any article, material, or supply incorporated directly into construction materials.

Construction material means an article, material, or supply brought to the construction site by the Contractor or a subcontractor for incorporation into the building or work. The term also includes an item brought to the site preassembled from articles, materials, or supplies. However, emergency life safety systems, such as emergency lighting, fire alarm, and audio evacuation systems, that are discrete systems incorporated into a public building or work and that are produced as complete systems, are evaluated as a single and distinct construction material regardless of when or how the individual parts or components of those systems are delivered to the construction site. Materials purchased directly by the Government are supplies, not construction material.

Cost of components means--

(1) For components purchased by the Contractor, the acquisition cost, including transportation costs to the place of incorporation into the end product (whether or not such costs are paid to a domestic firm), and any applicable duty (whether or not a duty-free entry certificate is issued); or

(2) For components manufactured by the Contractor, all costs associated with the manufacture of the component, including transportation costs as described in paragraph (1) of this definition, plus allocable overhead costs, but excluding profit. Cost of components does not include any costs associated with the

manufacture of the end product.

Domestic construction material means--

(1) An unmanufactured construction material mined or produced in the United States; or

(2) A construction material manufactured in the United States, if the cost of its components mined, produced, or manufactured in the United States exceeds 50 percent of the cost of all its components. Components of foreign origin of the same class or kind for which nonavailability determinations have been made are treated as domestic.

Foreign construction material means a construction material other than a domestic construction material.

United States means the 50 States and the District of Columbia, U.S. territories and possessions, Puerto Rico, the Northern Mariana Islands, and any other place subject to U.S. jurisdiction, but does not include leased bases.

(b) Domestic preference. (1) This clause implements the Buy American Act (41 U.S.C. 10a-10d) and the Balance of Payments Program by providing a preference for domestic construction material. The Contractor shall use only domestic construction material in performing this contract, except as provided in paragraphs (b)(2) and (b)(3) of this clause.

(2) This requirement does not apply to the construction material or components listed by the Government as follows: none

(3) The Contracting Officer may add other foreign construction material to the list in paragraph (b)(2) of this clause if the Government determines that

(i) The cost of domestic construction material would be unreasonable. The cost of a particular domestic construction material subject to the requirements of the Buy American Act is unreasonable when the cost of such material exceeds the cost of foreign material by more than 6 percent. For determination of unreasonable cost under the Balance of Payments Program, the Contracting Officer will use a factor of 50 percent;

(ii) The application of the restriction of the Buy American Act or Balance of Payments Program to a particular construction material would be impracticable or inconsistent with the public interest; or

(iii) The construction material is not mined, produced, or manufactured in the United States in sufficient and reasonably available commercial quantities of a satisfactory quality.

(c) Request for determination of inapplicability of the Buy American Act or Balance of Payments Program. (1)(i) Any Contractor request to use foreign construction material in accordance with paragraph (b)(3) of this clause shall include adequate information for Government evaluation of the request, including--

(A) A description of the foreign and domestic construction materials;

(B) Unit of measure;

(C) Quantity;

(D) Price;

(E) Time of delivery or availability;

(F) Location of the construction project;

(G) Name and address of the proposed supplier; and

(H) A detailed justification of the reason for use of foreign construction materials cited in accordance with paragraph (b)(3) of this clause.

(ii) A request based on unreasonable cost shall include a reasonable survey of the market and a completed price comparison table in the format in paragraph (d) of this clause.

(iii) The price of construction material shall include all delivery costs to the construction site and any applicable duty (whether or not a duty-free certificate may be issued).

(iv) Any Contractor request for a determination submitted after contract award shall explain why the Contractor could not reasonably foresee the need for such determination and could not have requested the determination before contract award. If the Contractor does not submit a satisfactory explanation, the Contracting Officer need not make a determination.

(2) If the Government determines after contract award that an exception to the Buy American Act or Balance of Payments Program applies and the Contracting Officer and the Contractor negotiate adequate consideration, the Contracting Officer will modify the contract to allow use of the foreign construction material. However, when the basis for the exception is the unreasonable price of a domestic construction material, adequate consideration is not less than the differential established in paragraph (b)(3)(i) of this clause.

(3) Unless the Government determines that an exception to the Buy American Act or Balance of Payments Program applies, use of foreign construction material is noncompliant with the Buy American Act or Balance of Payments Program.

(d) Data. To permit evaluation of requests under paragraph (c) of this clause based on unreasonable cost, the Contractor shall include the following information and any applicable supporting data based on the survey of suppliers:

Foreign and Domestic Construction Materials Price Comparison

Construction material description	Unit of measure	Quantity	Price (dollars) \1\
Item 1			
Foreign construction material....	.....	.....	.....
Domestic construction material...	.....	.....	.....
Item 2			
Foreign construction material....	.....	.....	.....
Domestic construction material...	.....	.....	.....

Include all delivery costs to the construction site and any applicable duty (whether or not a duty-free entry certificate is issued).
List name, address, telephone number, and contact for suppliers surveyed. Attach copy of response; if oral, attach summary.
Include other applicable supporting information.

(End of clause)

52.228-1 BID GUARANTEE (SEP 1996)

(a) Failure to furnish a bid guarantee in the proper form and amount, by the time set for opening of bids, may be cause for rejection of the bid.

(b) The bidder shall furnish a bid guarantee in the form of a firm commitment, e.g., bid bond supported by good and sufficient surety or sureties acceptable to the Government, postal money order, certified check, cashier's check,

irrevocable letter of credit, or, under Treasury Department regulations, certain bonds or notes of the United States. The Contracting Officer will return bid guarantees, other than bid bonds, (1) to unsuccessful bidders as soon as practicable after the opening of bids, and (2) to the successful bidder upon execution of contractual documents and bonds (including any necessary coinsurance or reinsurance agreements), as required by the bid as accepted.

(c) The amount of the bid guarantee shall be 20 percent of the bid price or $3,000,000, whichever is less.

(d) If the successful bidder, upon acceptance of its bid by the Government within the period specified for acceptance, fails to execute all contractual documents or furnish executed bond(s) within 10 days after receipt of the forms by the bidder, the Contracting Officer may terminate the contract for default.

(e) In the event the contract is terminated for default, the bidder is liable for any cost of acquiring the work that exceeds the amount of its bid, and the bid guarantee is available to offset the difference.

52.228-14 IRREVOCABLE LETTER OF CREDIT (DEC 1999)

(a) “Irrevocable letter of credit” (ILC), as used in this clause, means a written commitment by a federally insured financial institution to pay all or part of a stated amount of money, until the expiration date of the letter, upon presentation by the Government (the beneficiary) of a written demand therefor. Neither the financial institution nor the offeror/Contractor can revoke or condition the letter of credit.

(b) If the offeror intends to use an ILC in lieu of a bid bond, or to secure other types of bonds such as performance and payment bonds, the letter of credit and letter of confirmation formats in paragraphs (e) and (f) of this clause shall be used.

(c) The letter of credit shall be irrevocable, shall require presentation of no document other than a written demand and the ILC (including confirming letter, if any), shall be issued/confirmed by an acceptable federally insured financial institution as provided in paragraph (d) of this clause, and--

(1) If used as a bid guarantee, the ILC shall expire no earlier than 60 days after the close of the bid acceptance period;

(2) If used as an alternative to corporate or individual sureties as security for a performance or payment bond, the offeror/Contractor may submit an ILC with an initial expiration date estimated to cover the entire period for which financial security is required or may submit an ILC with an initial expiration date that is a minimum period of one year from the date of issuance. The ILC shall provide that, unless the issuer provides the beneficiary written notice of non-renewal at least 60 days in advance of the current expiration date, the ILC is automatically extended without amendment for one year from the expiration date, or any future expiration date, until the period of required coverage is completed and the Contracting Officer provides the financial institution with a written statement waiving the right to payment. The period of required coverage shall be:

(i) For contracts subject to the Miller Act, the later of--

(A) One year following the expected date of final payment;

(B) For performance bonds only, until completion of any warranty period; or

(C) For payment bonds only, until resolution of all claims filed against the payment bond during the one-year period following final payment.

(ii) For contracts not subject to the Miller Act, the later of--

(A) 90 days following final payment; or

(B) For performance bonds only, until completion of any warranty period.

(d) Only federally insured financial institutions rated investment grade or higher shall issue or confirm the ILC. The offeror/Contractor shall provide the Contracting Officer a credit rating that indicates the financial institution has the required rating(s) as of the date of issuance of the ILC. Unless the financial institution issuing the ILC had letter of credit business of less than $25 million in the past year, ILCs over $5 million must be confirmed by another acceptable financial institution that had letter of credit business of less than $25 million in the past year.

(e) The following format shall be used by the issuing financial institution to create an ILC:

_____

[Issuing Financial Institution's Letterhead or Name and Address]

Issue Date _____

IRREVOCABLE LETTER OF CREDIT NO. _____

Account party's name _____

Account party's address _____

For Solicitation No. _____(for reference only)

TO: [U.S. Government agency]

[U.S. Government agency's address]

1. We hereby establish this irrevocable and transferable Letter of Credit in your favor for one or more drawings up to United States $_____. This Letter of Credit is payable at [issuing financial institution's and, if any, confirming financial institution's] office at [issuing financial institution's address and, if any, confirming financial institution's address] and expires with our close of business on _____, or any automatically extended expiration date.

2. We hereby undertake to honor your or the transferee's sight draft(s) drawn on the issuing or, if any, the confirming financial institution, for all or any part of this credit if presented with this Letter of Credit and confirmation, if any, at the office specified in paragraph 1 of this Letter of Credit on or before the expiration date or any automatically extended expiration date.

3. [This paragraph is omitted if used as a bid guarantee, and subsequent paragraphs are renumbered.] It is a condition of this Letter of Credit that it is deemed to be automatically extended without amendment for one year from the expiration date hereof, or any future expiration date, unless at least 60 days prior to any expiration date, we notify you or the transferee by registered mail, or other receipted means of delivery, that we elect not to consider this Letter of Credit renewed for any such additional period. At the time we notify you, we also agree to notify the account party (and confirming financial institution, if any) by the same means of delivery.

4. This Letter of Credit is transferable. Transfers and assignments of proceeds are to be effected without charge to either the beneficiary or the transferee/assignee of proceeds. Such transfer or assignment shall be only at the written direction of the Government (the beneficiary) in a form satisfactory to the issuing financial institution and the confirming financial institution, if any.

5. This Letter of Credit is subject to the Uniform Customs and Practice (UCP) for Documentary Credits, 1993 Revision, International Chamber of Commerce Publication No. 500, and to the extent not inconsistent therewith, to the laws of _____ [state of confirming financial institution, if any, otherwise state of issuing financial institution].

6. If this credit expires during an interruption of business of this financial institution as described in Article 17 of the

UCP, the financial institution specifically agrees to effect payment if this credit is drawn against within 30 days after the resumption of our business.

Sincerely,

_____

[Issuing financial institution]

(f) The following format shall be used by the financial institution to confirm an ILC:

_____
[Confirming Financial Institution's Letterhead or Name and Address]

(Date) _____

Our Letter of Credit Advice Number _____

Beneficiary: _____ [U.S. Government agency]

Issuing Financial Institution: _____

Issuing Financial Institution's LC No.: _____

Gentlemen:

1. We hereby confirm the above indicated Letter of Credit, the original of which is attached, issued by _____ [name of issuing financial institution] for drawings of up to United States dollars _____/U.S. $_____ and expiring with our close of business on _____ [the expiration date], or any automatically extended expiration date.

2. Draft(s) drawn under the Letter of Credit and this Confirmation are payable at our office located at _____.

3. We hereby undertake to honor sight draft(s) drawn under and presented with the Letter of Credit and this Confirmation at our offices as specified herein.

4. [This paragraph is omitted if used as a bid guarantee, and subsequent paragraphs are renumbered.] It is a condition of this confirmation that it be deemed automatically extended without amendment for one year from the expiration date hereof, or any automatically extended expiration date, unless:

(a) At least 60 days prior to any such expiration date, we shall notify the Contracting Officer, or the transferee and the issuing financial institution, by registered mail or other receipted means of delivery, that we elect not to consider this confirmation extended for any such additional period; or

(b) The issuing financial institution shall have exercised its right to notify you or the transferee, the account party, and ourselves, of its election not to extend the expiration date of the Letter of Credit.

5. This confirmation is subject to the Uniform Customs and Practice (UCP) for Documentary Credits, 1993 Revision, International Chamber of Commerce Publication No. 500, and to the extent not inconsistent therewith, to the laws of _____ [state of confirming financial institution].

6. If this confirmation expires during an interruption of business of this financial institution as described in Article 17 of the UCP, we specifically agree to effect payment if this credit is drawn against within 30 days after the resumption of our business.

Sincerely,

_____

[Confirming financial institution]

(g) The following format shall be used by the Contracting Officer for a sight draft to draw on the Letter of Credit:

SIGHT DRAFT

_____

[City, State]

(Date) _____

[Name and address of financial institution]

Pay to the order of _____ [Beneficiary Agency] _____ the sum of United States $_____.
This draft is drawn under Irrevocable Letter of Credit No. _____.

_____

[Beneficiary Agency]

By: _____

(End of clause)

52.231-5000 EQUIPMENT OWNERSHIP AND OPERATING EXPENSE SCHEDULE
MAR 1995)--EFARS

(a) This clause does not apply to terminations. See 52.249-5000, Basis for Settlement of Proposals and FAR Part 49.

(b) Allowable cost for construction and marine plant and equipment in sound workable condition owned or controlled and furnished by a contractor or subcontractor at any tier shall be based on actual cost data for each piece of equipment or groups of similar serial and series for which the Government can determine both ownership and operating costs from the contractor's accounting records. When both ownership and operating costs cannot be determined for any piece of equipment or groups of similar serial or series equipment from the contractor's accounting records, costs for that equipment shall be based upon the applicable provisions of EP 1110-1-8, Construction Equipment Ownership and Operating Expense Schedule, Region ____. Working conditions shall be considered to be average for determining equipment rates using the schedule unless specified otherwise by the contracting officer. For equipment not included in the schedule, rates for comparable pieces of equipment may be used or a rate may be developed using the formula provided in the schedule. For forward pricing, the schedule in effect at the time of negotiations shall apply. For retroactive pricing, the schedule in effect at the time the work was performed shall apply.

(c) Equipment rental costs are allowable, subject to the provisions of FAR 31.105(d)(ii) and FAR 31.205-36. Rates for equipment rented from an organization under common control, lease-purchase arrangements, and sale-leaseback arrangements, will be determined using the schedule, except that actual rates will be used for equipment leased from an organization under common control that has an established practice of leasing the same or similar equipment to unaffiliated lessees.

(d) When actual equipment costs are proposed and the total amount of the pricing action exceeds the small purchase threshold, the contracting officer shall request the contractor to submit either certified cost or pricing data, or partial/limited data, as appropriate. The data shall be submitted on Standard Form 1411, Contract Pricing Proposal Cover Sheet.

(End of clause)

52.232-27 PROMPT PAYMENT FOR CONSTRUCTION CONTRACTS (MAY 2001)

Notwithstanding any other payment terms in this contract, the Government will make invoice payments and contract financing payments under the terms and conditions specified in this clause. Payment shall be considered as being made on the day a check is dated or the date of an electronic funds transfer. Definitions of pertinent terms are set forth in sections 2.101 and 32.902 of the Federal Acquisition Regulation. All days referred to in this clause are calendar days, unless otherwise specified. (However, see subparagraph (a)(3) concerning payments due on Saturdays, Sundays, and legal holidays.)

(a) Invoice payments. (1) Types of invoice payments. For purposes of this clause, there are several types of invoice payments that may occur under this contract, as follows:

(i) Progress payments, if provided for elsewhere in this contract, based on Contracting Officer approval of the estimated amount and value of work or services performed, including payments for reaching milestones in any project:

(A) The due date for making such payments shall be 14 days after receipt of the payment request by the designated billing office. If the designated billing office fails to annotate the payment request with the actual date of receipt at the time of receipt, the payment due date shall be the 14th day after the date of the Contractor's payment request, provided a proper payment request is received and there is no disagreement over quantity, quality, or Contractor compliance with contract requirements.

(B) The due date for payment of any amounts retained by the Contracting Officer in accordance with the clause at 52.232-5, Payments Under Fixed-Price Construction Contracts, shall be as specified in the contract or, if not specified, 30 days after approval for release to the Contractor by the Contracting Officer.

(ii) Final payments based on completion and acceptance of all work and presentation of release of all claims against the Government arising by virtue of the contract, and payments for partial deliveries that have been accepted by the Government (e.g., each separate building, public work, or other division of the contract for which the price is stated separately in the contract):

(A) The due date for making such payments shall be either the 30th day after receipt by the designated billing office of a proper invoice from the Contractor, or the 30th day after Government acceptance of the work or services completed by the Contractor, whichever is later. If the designated billing office fails to annotate the invoice with the date of actual receipt at the time of receipt, the invoice payment due date shall be the 30th day after the date of the Contractor's invoice, provided a proper invoice is received and there is no disagreement over quantity, quality, or Contractor compliance with contract requirements.

(B) On a final invoice where the payment amount is subject to contract settlement actions (e.g., release of claims), acceptance shall be deemed to have occurred on the effective date of the contract settlement.

(2) Contractor's invoice. The Contractor shall prepare and submit invoices to the designated billing office specified in the contract. A proper invoice must include the items listed in subdivisions (a)(2)(i) through (a)(2)(ix) of this clause. If the invoice does not comply with these requirements, it shall be returned within 7 days after the date the designated billing office received the invoice, with a statement of the reasons why it is not a proper invoice. Untimely notification will be taken into account in computing any interest penalty owed the Contractor in the manner described in subparagraph (a)(4) of this clause.

(i) Name and address of the Contractor.

(ii) Invoice date. (The Contractor is encouraged to date invoices as close as possible to the date of mailing or transmission.)

(iii) Contract number or other authorization for work or services performed (including order number and contract line item number).

(iv) Description of work or services performed.

(v) Delivery and payment terms (e.g., prompt payment discount terms).

(vi) Name and address of Contractor official to whom payment is to be sent (must be the same as that in the contract or in a proper notice of assignment).

(vii) Name (where practicable), title, phone number, and mailing address of person to be notified in the event of a defective invoice.

(viii) For payments described in subdivision (a)(1)(i) of this clause, substantiation of the amounts requested and certification in accordance with the requirements of the clause at 52.232-5, Payments Under Fixed-Price Construction Contracts.

(ix) Any other information or documentation required by the contract.

(x) While not required, the Contractor is strongly encouraged to assign an identification number to each invoice.

(3) Interest penalty. An interest penalty shall be paid automatically by the designated payment office, without request from the Contractor, if payment is not made by the due date and the conditions listed in subdivisions (a)(3)(i) through (a)(3)(iii) of this clause are met, if applicable. However, when the due date falls on a Saturday, Sunday, or legal holiday when Federal Government offices are closed and Government business is not expected to be conducted, payment may be made on the following business day without incurring a late payment interest penalty.

(i) A proper invoice was received by the designated billing office.

(ii) A receiving report or other Government documentation authorizing payment was processed and there was no disagreement over quantity, quality, Contractor compliance with any contract term or condition, or requested progress payment amount.

(iii) In the case of a final invoice for any balance of funds due the Contractor for work or services performed, the amount was not subject to further contract settlement actions between the Government and the Contractor.

(4) Computing penalty amount. The interest penalty shall be at the rate established by the Secretary of the Treasury under section 12 of the Contract Disputes Act of 1978 (41 U.S.C. 611) that is in effect on the day after the due date, except where the interest penalty is prescribed by other governmental authority (e.g., tariffs). This rate is referred to as the "Renegotiation Board Interest Rate," and it is published in the Federal Register semiannually on or about January 1 and July 1. The interest penalty shall accrue daily on the invoice principal payment amount approved by the Government until the payment date of such approved principal amount; and will be compounded in 30-day increments inclusive from the first day after the due date through the payment date. That is, interest accrued at the end of any 30-day period will be added to the approved invoice principal payment amount and will be subject to interest penalties if not paid in the succeeding 30-day period. If the designated billing office failed to notify the Contractor of a defective invoice within the periods prescribed in subparagraph (a)(2) of this clause, the due date on the corrected invoice will be adjusted by subtracting from such date the number of days taken beyond the prescribed notification of defects period. Any interest penalty owed the Contractor will be based on this adjusted due date. Adjustments will be made by the designated payment office for errors in calculating interest penalties.

(i) For the sole purpose of computing an interest penalty that might be due the Contractor for payments described in subdivision (a)(1)(ii) of this clause, Government acceptance or approval shall be deemed to have occurred constructively on the 7th day after the Contractor has completed the work or services in accordance with the terms and conditions of the contract. In the event that actual acceptance or approval occurs within the constructive

acceptance or approval period, the determination of an interest penalty shall be based on the actual date of acceptance or approval. Constructive acceptance or constructive approval requirements do not apply if there is a disagreement over quantity, quality, or Contractor compliance with a contract provision. These requirements also do not compel Government officials to accept work or services, approve Contractor estimates, perform contract administration functions, or make payment prior to fulfilling their responsibilities.

(ii) The following periods of time will not be included in the determination of an interest penalty:

(A) The period taken to notify the Contractor of defects in invoices submitted to the Government, but this may not exceed 7 days.

(B) The period between the defects notice and resubmission of the corrected invoice by the Contractor.

(C) For incorrect electronic funds transfer (EFT) information, in accordance with the EFT clause of this contract.

(iii) Interest penalties will not continue to accrue after the filing of a claim for such penalties under the clause at 52.233-1, Disputes, or for more than 1 year. Interest penalties of less than $1 need not be paid.

(iv) Interest penalties are not required on payment delays due to disagreement between the Government and the Contractor over the payment amount or other issues involving contract compliance, or on amounts temporarily withheld or retained in accordance with the terms of the contract. Claims involving disputes, and any interest that may be payable, will be resolved in accordance with the clause at 52.233-1, Disputes.

(5) Prompt payment discounts. An interest penalty also shall be paid automatically by the designated payment office, without request from the Contractor, if a discount for prompt payment is taken improperly. The interest penalty will be calculated on the amount of discount taken for the period beginning with the first day after the end of the discount period through the date when the Contractor is paid.

(6) Additional interest penalty. (i) If this contract was awarded on or after October 1, 1989, a penalty amount, calculated in accordance with subdivision (a)(6)(iii) of this clause, shall be paid in addition to the interest penalty amount if the Contractor--

(A) Is owed an interest penalty of $1 or more;

(B) Is not paid the interest penalty within 10 days after the date the invoice amount is paid; and

(C) Makes a written demand to the designated payment office for additional penalty payment, in accordance with subdivision (a)(6)(ii) of this clause, postmarked not later than 40 days after the date the invoice amount is paid.

(ii)(A) Contractors shall support written demands for additional penalty payments with the following data. No additional data shall be required. Contractors shall--

(1) Specifically assert that late payment interest is due under a specific invoice, and request payment of all overdue late payment interest penalty and such additional penalty as may be required;

(2) Attach a copy of the invoice on which the unpaid late payment interest was due; and

(3) State that payment of the principal has been received, including the date of receipt.

(B) Demands must be postmarked on or before the 40th day after payment was made, except that--

(1) If the postmark is illegible or nonexistent, the demand must have been received and annotated with the date of receipt by the designated payment office on or before the 40th day after payment was made; or

(2) If the postmark is illegible or nonexistent and the designated payment office fails to make the required

annotation, the demand's validity will be determined by the date the Contractor has placed on the demand; provided such date is no later than the 40th day after payment was made.

(iii)(A) The additional penalty shall be equal to 100 percent of any original late payment interest penalty, except--

(1) The additional penalty shall not exceed $5,000;

(2) The additional penalty shall never be less than $25; and

(3) No additional penalty is owed if the amount of the underlying interest penalty is less than $1.

(B) If the interest penalty ceases to accrue in accordance with the limits stated in subdivision (a)(4)(iii) of this clause, the amount of the additional penalty shall be calculated on the amount of interest penalty that would have accrued in the absence of these limits, subject to the overall limits on the additional penalty specified in subdivision (a)(6)(iii)(A) of this clause.

(C) For determining the maximum and minimum additional penalties, the test shall be the interest penalty due on each separate payment made for each separate contract. The maximum and minimum additional penalty shall not be based upon individual invoices unless the invoices are paid separately. Where payments are consolidated for disbursing purposes, the maximum and minimum additional penalty determination shall be made separately for each contract therein.

(D) The additional penalty does not apply to payments regulated by other Government regulations (e.g., payments under utility contracts subject to tariffs and regulation).

(b) Contract financing payments. (1) Due dates for recurring financing payments. If this contract provides for contract financing, requests for payment shall be submitted to the designated billing office as specified in this contract or as directed by the Contracting Officer. Contract financing payments shall be made on the [insert day as prescribed by Agency head; if not prescribed, insert 30th day] day after receipt of a proper contract financing request by the designated billing office. In the event that an audit or other review of a specific financing request is required to ensure compliance with the terms and conditions of the contract, the designated payment office is not compelled to make payment by the due date specified.

(2) Due dates for other contract financing. For advance payments, loans, or other arrangements that do not involve recurring submissions of contract financing requests, payment shall be made in accordance with the corresponding contract terms or as directed by the Contracting Officer.

(3) Interest penalty not applicable. Contract financing payments shall not be assessed an interest penalty for payment delays.

(c) Subcontract clause requirements. The Contractor shall include in each subcontract for property or services (including a material supplier) for the purpose of performing this contract the following:

(1) Prompt payment for subcontractors. A payment clause that obligates the Contractor to pay the subcontractor for satisfactory performance under its subcontract not later than 7 days from receipt of payment out of such amounts as are paid to the Contractor under this contract.

(2) Interest for subcontractors. An interest penalty clause that obligates the Contractor to pay to the subcontractor an interest penalty for each payment not made in accordance with the payment clause--

(i) For the period beginning on the day after the required payment date and ending on the date on which payment of the amount due is made; and

(ii) Computed at the rate of interest established by the Secretary of the Treasury, and published in the Federal Register, for interest payments under section 12 of the Contract Disputes Act of 1978 (41 U.S.C. 611) in effect at the

time the Contractor accrues the obligation to pay an interest penalty.

(3) Subcontractor clause flowdown. A clause requiring each subcontractor to include a payment clause and an interest penalty clause conforming to the standards set forth in subparagraphs (c)(1) and (c)(2) of this clause in each of its subcontracts, and to require each of its subcontractors to include such clauses in their subcontracts with each lower-tier subcontractor or supplier.

(d) Subcontract clause interpretation. The clauses required by paragraph (c) of this clause shall not be construed to impair the right of the Contractor or a subcontractor at any tier to negotiate, and to include in their subcontract, provisions that--

(1) Retainage permitted. Permit the Contractor or a subcontractor to retain (without cause) a specified percentage of each progress payment otherwise due to a subcontractor for satisfactory performance under the subcontract without incurring any obligation to pay a late payment interest penalty, in accordance with terms and conditions agreed to by the parties to the subcontract, giving such recognition as the parties deem appropriate to the ability of a subcontractor to furnish a performance bond and a payment bond;

(2) Withholding permitted. Permit the Contractor or subcontractor to make a determination that part or all of the subcontractor's request for payment may be withheld in accordance with the subcontract agreement; and

(3) Withholding requirements. Permit such withholding without incurring any obligation to pay a late payment penalty if--

(i) A notice conforming to the standards of paragraph (g) of this clause previously has been furnished to the subcontractor; and

(ii) A copy of any notice issued by a Contractor pursuant to subdivision (d)(3)(i) of this clause has been furnished to the Contracting Officer.

(e) Subcontractor withholding procedures. If a Contractor, after making a request for payment to the Government but before making a payment to a subcontractor for the subcontractor's performance covered by the payment request, discovers that all or a portion of the payment otherwise due such subcontractor is subject to withholding from the subcontractor in accordance with the subcontract agreement, then the Contractor shall--

(1) Subcontractor notice. Furnish to the subcontractor a notice conforming to the standards of paragraph (g) of this clause as soon as practicable upon ascertaining the cause giving rise to a withholding, but prior to the due date for subcontractor payment;

(2) Contracting Officer notice. Furnish to the Contracting Officer, as soon as practicable, a copy of the notice furnished to the subcontractor pursuant to subparagraph (e)(1) of this clause;

(3) Subcontractor progress payment reduction. Reduce the subcontractor's progress payment by an amount not to exceed the amount specified in the notice of withholding furnished under subparagraph (e)(1) of this clause;

(4) Subsequent subcontractor payment. Pay the subcontractor as soon as practicable after the correction of the identified subcontract performance deficiency, and--

(i) Make such payment within--

(A) Seven days after correction of the identified subcontract performance deficiency (unless the funds therefor must be recovered from the Government because of a reduction under subdivision (e)(5)(i)) of this clause; or

(B) Seven days after the Contractor recovers such funds from the Government; or

(ii) Incur an obligation to pay a late payment interest penalty computed at the rate of interest established by the

Secretary of the Treasury, and published in the Federal Register, for interest payments under section 12 of the Contracts Disputes Act of 1978 (41 U.S.C. 611) in effect at the time the Contractor accrues the obligation to pay an interest penalty;

(5) Notice to Contracting Officer. Notify the Contracting Officer upon--

(i) Reduction of the amount of any subsequent certified application for payment; or

(ii) Payment to the subcontractor of any withheld amounts of a progress payment, specifying--

(A) The amounts withheld under subparagraph (e)(1) of this clause; and

(B) The dates that such withholding began and ended; and

(6) Interest to Government. Be obligated to pay to the Government an amount equal to interest on the withheld payments (computed in the manner provided in 31 U.S.C. 3903(c)(1)), from the 8th day after receipt of the withheld amounts from the Government until--

(i) The day the identified subcontractor performance deficiency is corrected; or

(ii) The date that any subsequent payment is reduced under subdivision (e)(5)(i) of this clause.

(f) Third-party deficiency reports. (1) Withholding from subcontractor. If a Contractor, after making payment to a first-tier subcontractor, receives from a supplier or subcontractor of the first-tier subcontractor (hereafter referred to as a "second-tier subcontractor") a written notice in accordance with section 2 of the Act of August 24, 1935 (40 U.S.C. 270b, Miller Act), asserting a deficiency in such first-tier subcontractor's performance under the contract for which the Contractor may be ultimately liable, and the Contractor determines that all or a portion of future payments otherwise due such first-tier subcontractor is subject to withholding in accordance with the subcontract agreement, the Contractor may, without incurring an obligation to pay an interest penalty under subparagraph (e)(6) of this clause--

(i) Furnish to the first-tier subcontractor a notice conforming to the standards of paragraph (g) of this clause as soon as practicable upon making such determination; and

(ii) Withhold from the first-tier subcontractor's next available progress payment or payments an amount not to exceed the amount specified in the notice of withholding furnished under subdivision (f)(1)(i) of this clause.

(2) Subsequent payment or interest charge. As soon as practicable, but not later than 7 days after receipt of satisfactory written notification that the identified subcontract performance deficiency has been corrected, the Contractor shall--

(i) Pay the amount withheld under subdivision (f)(1)(ii) of this clause to such first-tier subcontractor; or

(ii) Incur an obligation to pay a late payment interest penalty to such first-tier subcontractor computed at the rate of interest established by the Secretary of the Treasury, and published in the Federal Register, for interest payments under section 12 of the Contracts Disputes Act of 1978 (41 U.S.C. 611) in effect at the time the Contractor accrues the obligation to pay an interest penalty.

(g) Written notice of subcontractor withholding. A written notice of any withholding shall be issued to a subcontractor (with a copy to the Contracting Officer of any such notice issued by the Contractor), specifying--

(1) The amount to be withheld;

(2) The specific causes for the withholding under the terms of the subcontract; and

(3) The remedial actions to be taken by the subcontractor in order to receive payment of the amounts withheld.

(h) Subcontractor payment entitlement. The Contractor may not request payment from the Government of any amount withheld or retained in accordance with paragraph (d) of this clause until such time as the Contractor has determined and certified to the Contracting Officer that the subcontractor is entitled to the payment of such amount.

(i) Prime-subcontractor disputes. A dispute between the Contractor and subcontractor relating to the amount or entitlement of a subcontractor to a payment or a late payment interest penalty under a clause included in the subcontract pursuant to paragraph (c) of this clause does not constitute a dispute to which the United States is a party. The United States may not be interpleaded in any judicial or administrative proceeding involving such a dispute.

(j) Preservation of prime-subcontractor rights. Except as provided in paragraph (i) of this clause, this clause shall not limit or impair any contractual, administrative, or judicial remedies otherwise available to the Contractor or a subcontractor in the event of a dispute involving late payment or nonpayment by the Contractor or deficient subcontract performance or nonperformance by a subcontractor.

(k) Non-recourse for prime contractor interest penalty. The Contractor's obligation to pay an interest penalty to a subcontractor pursuant to the clauses included in a subcontract under paragraph (c) of this clause shall not be construed to be an obligation of the United States for such interest penalty. A cost-reimbursement claim may not include any amount for reimbursement of such interest penalty.

52.232-33 PAYMENT BY ELECTRONIC FUNDS TRANSFER—CENTRAL CONTRACTOR REGISTRATION (MAY 1999)

(a) Method of payment. (1) All payments by the Government under this contract shall be made by electronic funds transfer (EFT), except as provided in paragraph (a)(2) of this clause. As used in this clause, the term “EFT” refers to the funds transfer and may also include the payment information transfer.

(2) In the event the Government is unable to release one or more payments by EFT, the Contractor agrees to either--

(i) Accept payment by check or some other mutually agreeable method of payment; or

(ii) Request the Government to extend the payment due date until such time as the Government can make payment by EFT (but see paragraph (d) of this clause).

(b) Contractor's EFT information. The Government shall make payment to the Contractor using the EFT information contained in the Central Contractor Registration (CCR) database. In the event that the EFT information changes, the Contractor shall be responsible for providing the updated information to the CCR database.

(c) Mechanisms for EFT payment. The Government may make payment by EFT through either the Automated Clearing House (ACH) network, subject to the rules of the National Automated Clearing House Association, or the Fedwire Transfer System. The rules governing Federal payments through the ACH are contained in 31 CFR part 210.

(d) Suspension of payment. If the Contractor's EFT information in the CCR database is incorrect, then the Government need not make payment to the Contractor under this contract until correct EFT information is entered into the CCR database; and any invoice or contract financing request shall be deemed not to be a proper invoice for the purpose of prompt payment under this contract. The prompt payment terms of the contract regarding notice of an improper invoice and delays in accrual of interest penalties apply.

(e) Contractor EFT arrangements. If the Contractor has identified multiple payment receiving points (i.e., more than one remittance address and/or EFT information set) in the CCR database, and the Contractor has not notified the

Government of the payment receiving point applicable to this contract, the Government shall make payment to the first payment receiving point (EFT information set or remittance address as applicable) listed in the CCR database.

(f) Liability for uncompleted or erroneous transfers. (1) If an uncompleted or erroneous transfer occurs because the Government used the Contractor's EFT information incorrectly, the Government remains responsible for--

(i) Making a correct payment;

(ii) Paying any prompt payment penalty due; and

(iii) Recovering any erroneously directed funds.

(2) If an uncompleted or erroneous transfer occurs because the Contractor's EFT information was incorrect, or was revised within 30 days of Government release of the EFT payment transaction instruction to the Federal Reserve System, and--

(i) If the funds are no longer under the control of the payment office, the Government is deemed to have made payment and the Contractor is responsible for recovery of any erroneously directed funds; or

(ii) If the funds remain under the control of the payment office, the Government shall not make payment, and the provisions of paragraph (d) of this clause shall apply.

(g) EFT and prompt payment. A payment shall be deemed to have been made in a timely manner in accordance with the prompt payment terms of this contract if, in the EFT payment transaction instruction released to the Federal Reserve System, the date specified for settlement of the payment is on or before the prompt payment due date, provided the specified payment date is a valid date under the rules of the Federal Reserve System.

(h) EFT and assignment of claims. If the Contractor assigns the proceeds of this contract as provided for in the assignment of claims terms of this contract, the Contractor shall require as a condition of any such assignment, that the assignee shall register in the CCR database and shall be paid by EFT in accordance with the terms of this clause. In all respects, the requirements of this clause shall apply to the assignee as if it were the Contractor. EFT information that shows the ultimate recipient of the transfer to be other than the Contractor, in the absence of a proper assignment of claims acceptable to the Government, is incorrect EFT information within the meaning of paragraph (d) of this clause.

(i) Liability for change of EFT information by financial agent. The Government is not liable for errors resulting from changes to EFT information made by the Contractor's financial agent.

(j) Payment information. The payment or disbursing office shall forward to the Contractor available payment information that is suitable for transmission as of the date of release of the EFT instruction to the Federal Reserve System. The Government may request the Contractor to designate a desired format and method(s) for delivery of payment information from a list of formats and methods the payment office is capable of executing. However, the Government does not guarantee that any particular format or method of delivery is available at any particular payment office and retains the latitude to use the format and delivery method most convenient to the Government. If the Government makes payment by check in accordance with paragraph (a) of this clause, the Government shall mail the payment information to the remittance address contained in the CCR database.

(End of Clause)

52.236-4013 CONTRACTOR-PREPARED NETWORK ANALYSIS SYSTEM
(January 1999 SAS) (Ref.DFARS 236.273)

(a) The progress chart to be prepared by the contractor pursuant to FAR 52.236-15, SCHEDULES FOR CONSTRUCTION CONTRACTS, shall utilize the Critical Path Method (CPM) of network calculation. This

network analysis system shall be provided in either the Precedence Diagram Method (PDM) or the Arrow Diagram Method (ADM)

(b) In preparing this system, the scheduling of construction is the responsibility of the contractor. The requirement for the system is included to assure adequate planning and execution of the work; to assist the Contracting Officer in evaluating the progress of the work; and will be the exclusive means of determining progress for payment purposes.

(c) For policy directive of network analysis systems, review the Corps of Engineers' ER 1-1-11 entitled Network Analysis System. The appendix in this regulation contains the Standard Data Exchange Format specification, which was developed to transfer data from one schedule program to another. Single copies are available to bona fide bidders on request.

(d) The system shall consist of diagrams and accompanying mathematical analysis. The diagrams shall show elements of the project in detail and the entire project in summary.

(1) Diagrams:

(i) Diagrams shall show the order and interdependence of activities and the sequence in which the work is to be accomplished as planned by the contractor. The basic concept of a network analysis diagram will be followed to show interdependence of activity start and completion dates. The critical path defined as the longest path through the network which determines the final completion time or data of the project as a whole, shall be highlighted.

(ii) Detailed network activities shall include, in addition to construction activities, key procurement activities which could affect progress, especially those requiring long lead time for delivery, critical materials in short supply, and equipment requiring special fabrication for the job. Submittals which could affect progress shall be shown. Submittals include all shop drawings, samples, letters of certification, tests, and other engineering information that may be required by the contractor for quality management. A separate activity of duration not less than 30 calendar days shall be included for approval for each and any submittal requiring Government approval.

(iii) Government activities which could affect the contractor's progress, such as Government approval and Government-furnished materials, shall be shown separately in the network.

(iv) Activities with duration times in excess of 30 days shall be kept to a minimum to facilitate monthly progress evaluation. The selection and number of activities shall be subject to the Contracting Officer's approval. Detailed networks need not be time scaled but shall be drafted to show a continuous flow from left to right with no paths from right to left.

(v) The following information shall be shown on the diagram for each activity:

(A) Activity Identification Numbers: Use preceding and following event numbers. Numbering shall be assigned so that preceding event numbers are smaller numerically than the following event numbers. For "ADM" systems, skip numbering should be used on the original network to allow addition of subsequent activities for changes in logic or to incorporate change orders.

(B) Description of Activity

(C) Cost

(D) Activity Duration: Calendar Days. In calculating activity durations, the effects of Saturdays, Sundays, holidays, and normal inclement weather must be considered.

(E) Associated Bid Item number when Applicable: In unit price contracts, a single work activity may contain several bid items. If payment is to be based on actual measured quantities of completed work, no bid item numbers should be shown on the diagram. The contractor should be prepared to demonstrate the computation of total cost for an activity by the appropriate bid items if requested by the Contracting Officer for progress determination.

(vi) Summary Network: If the project is of such size that the entire network cannot be readily shown on a single sheet, a summary network diagram shall be provided. The summary network diagram shall consist of a minimum of 50 activities and a maximum of 150 activities and shall be based on, and supported by detailed diagrams. Related activities shall be grouped on the network. The critical path shall be plotted and highlighted generally along the center of the sheet with channels with increasing float placed towards the top or bottom. Where slack exists, the activities shall be shown at the time when they are scheduled to be accomplished. The summary diagrams must be updated as necessary to reflect updates to the detailed diagrams. Total project duration (calendar days) and planned completion date must be shown. A cash flow curve (S-curve) must be shown on the diagrams.

(vii) Sheet size of diagram shall be standard size used by computer company. Each updated copy shall show a date of the latest revision.

(2) The Mathematical Analysis:

(i) the mathematical analysis of the network diagrams shall include the following tabulation of each sort for each activity.

(A) preceding and following event/activity number.

(B) activity description.

(C) estimated duration of activities(calendar days)

(D) earliest or actual start date (calendar date)

(E) earliest or actual finish date (calendar date)

(F) latest start date (calendar date)

(G) latest finish date (calendar date)

(H) slack or float (calendar days)

(I) monetary value of activity

(J) percentage of activity completed

(K) Contractor's earnings based on portion of activity completed.

(L) bid item when applicable and feasible

(M) planned manpower resources (crew type/size) to be assigned to each activity or category of work, if more than one activity. The Government will not approve/disapprove such an item, since it is the contractor's management responsibility.

(ii) the mathematical analysis shall include a compiled total value of the completed and partially completed activities and subtotals by line items and bid items. For unit price contracts where payment is based on actual quantities, the value of completed work for a single activity may be based on the value of the actual earnings to determine progress only.

(iii) the mathematical analysis shall reflect the official contract completion date including revised completion dates approved by the Contracting Officer.

(iv) the program or means used in making the mathematical computations shall have the capability of retaining the original late start schedule on the updates or progress reports throughout the duration of the project. These dates will only be discarded in the event of a major schedule revision as defined in paragraph (e)(2) below. Actual start and completion dates for each activity shall be entered as they occur. Past and current activities that are 100 percent complete shall be included in each month's update and reflect the actual start/completion dates.

(v) the analysis shall, as a minimum, list the activities in sorts or groups as follows:

(A) by the preceding event/activity number from lowest to highest and then in the order of the following event number (i-j or activity number sort)

(B) by the amount of slack, then in order of preceding event number (float sort)

(C) in order of latest allowable start dates then in order of preceding event numbers and then in order of succeeding event numbers (late start sort)

(D) in order of latest allowable finish dates then in order of preceding event numbers (late finish sort)

(E) if the Precedence Diagram Method (PDM) is used, then add a predecessor-successor report (predecessor-successor sort)

(vi) the program or means used in making the computations shall have the capability to schedule anticipated earnings on the total contract as of the pay estimate cutoff date. Earnings shall be scheduled for both the early and late finish schedules. Earnings may be shown either graphically or tabular format.

(vii) the computer program used to generate the mathematical analysis shall be described in full to the Government. Description shall included: name of program; version; name, address, phone number of software source; program documentation; specifications; and summary of features. Once submitted, the program will not be changed or replaced without prior approval of the Contracting Officer.

(3) Feature to be Separately Identifiable:

(i) required Completion Dates: In a project with more than one completion date, each date shall be separately coded and scheduled. The dates shall be flagged on the diagram, and an event/activity shall be included in the mathematical analysis for each required completion date.

(ii) significant Feature or Facility: The completion of each significant feature of the work, e.g., building, site work, bridge, embankment, shall be flagged on the diagram, and an event/activity shall be included in the mathematical analysis.

(iii) a cash flow curve (S-curve) reflecting progress in relation to expenditure must be shown on the diagrams.

(e) Submission and approval of the system shall be as follows:

(1) The successful bidder is expected to:

(i) coordinate the preparation of its NAS with all of its subcontractors and suppliers to ensure adequate activity relationships, durations, and manpower.

(ii) submit a completed NAS with all required details and sorts within 30 days after Notice to Proceed. Prior to the "pre-construction conference," the contractor must submit a detailed network diagram for the first 60 days of the project, after Notice to Proceed, showing all intended work activities for this period. FAILURE TO DO SO MAY RESULT IN THE ISSUANCE OF AN INTERIM UNSATISFACTORY PERFORMANCE EVALUATION, AND THE POSSIBILITY OF TERMINATION OF THE CONTRACT FOR DEFAULT.

(iii) all monthly progress payments will be based on approved or conditionally approved, without exception, complete NAS system only. When the applicable NAS is approved, pay estimates will be processed.

(iv) in addition to hard paper copies, two (2) electronic copies on 3-1/2" diskettes of the initial, revised, and all monthly NAS updates shall be required.

(v) participate in a review and evaluation of the proposed network diagrams and mathematical analysis by the Contracting Officer.

(vi) this review will be in the form of a joint conference between the Contractor and the Government. At this time, all aspects of the Contractor's schedule will be discussed to include crew sizes, productivity, equipment, durations and other resource factors that affect the project's completion. Any revisions necessary as a result of this review shall be resubmitted for approval of the Contracting Officer within 10 calendar days after the conference.

(vii) the approved schedule shall then be the schedule to be used by the contractor for planning, organizing and directing the work, reporting progress, and requesting payment for work accomplished.

(2) The Contractor:

(i) Reporting:

(A) submit at monthly intervals, a report of the actual construction progress by updating the mathematical analysis of all sorts and both the detailed and summary diagrams. Updating information to be entered into the mathematical analysis and diagrams will be reviewed at monthly joint update meetings and will be subject to the approval of the Contracting Officer. The contractor shall submit a narrative report with the updated analysis which shall include but not be limited to a description of the problem areas, current and anticipated, delaying factors and their impact, and an explanation of corrective actions taken or proposed. If the critical path of the updated network diagram changes from the original network, this should be clearly marked on the update.

(B) the report shall show the activities or portions of activities completed during the reporting period clearly marked and their total value as basis for the contractor's periodic request for payment. Payment made pursuant to the contract clause entitled PAYMENTS UNDER FIXED-PRICE CONSTRUCTION CONTRACTS will be based on the total value of such activities completed or partially completed after verification by the Contracting Officer. The report will state the percentage of the work actually completed and scheduled as of the report date and the progress along the critical path in terms of days ahead or behind the allowable dates.

(C) in projects having more that one bid item, the report shall include a separate summary setting forth the percentage of the work scheduled to be completed and the percentage of the work actually completed for each of the included bid items.

(D) failure to submit updated monthly NAS showing progress and percentage completed may result in a non-payment until submittal is received by the Contracting Officer (FAR 52.236-15, SCHEDULES FOR CONSTRUCTION CONTRACTS).

(E) for unit price contracts, payment will be based on actual measured quantities. Progress for activities containing more than one bid item will be based on the sum of payments for the including bid items.

(F) if the project is behind schedule, progress along other paths with negative slack shall also be reported.

(G) a printout of all changes entered into the schedule shall be submitted with each monthly report. Changes are addressed below.

(ii) Changes:

(A) no changes to the approved NAS will be made without the Contracting Officer's approval.

(B) if the contractor desires to make changes in its method of operating and scheduling, which in turn may change the NAS's logic and/or durations, it shall notify the Contracting Officer in writing stating the reasons for the change. If the Contracting Officer considers these changes to be of a major nature, he/she may require the contractor to revise and submit for approval, without additional cost to the Government, all of the affected portion of the detailed diagram and mathematical analysis to show the effect on the project. A change will be considered of a major nature if it will effect the contract completion date or dates. Changes which affect activities with adequate slack time shall be considered major when their cumulative effect will affect the contract completion date.

(C) if the contractor performs the work in such a manner that the network diagram and mathematical analysis no longer indicate reasonable logic and duration for completion of the work, the contractor shall promptly revise the diagram and analysis to show his revised plans for completion without additional cost to the Government.

(D) any change in the man power/crew sizes based on the approved as-planned NAS shall be clearly indicated.

(E) when a request for proposal for a change order is issued, the contractor shall submit a subnet with its proposal indicating the effect of the revised work on the approved schedule.

(F) when a Notice to Proceed for additional work is issued, the contractor shall, within 10 calendar days, submit a subnet showing the revised or added features of work and how the change affects the remaining work. Upon approval by the Contracting Officer, this subnet shall be incorporated into the contractor's approved schedule and shall become the working schedule for continued evaluation of progress and will be used to evaluate impact on the contractor's work for the time extensions.

(G) if the contractor fails or refuses to incorporate the changed work in the network, the Contracting Officer may furnish logic revisions which the contractor shall include and use in the network analysis until the modification is settled or until actual dates supersede the estimated data.

(H) if the contractor objects to logic changes furnished by the Contracting Officer, he/she shall submit such objections in writing along with a counterplan within (10) days in accordance with the contract clause FAR 52.233-1 - DISPUTES. Failure to submit objections and counterplan within 10-day period will be deemed to indicate the contractor's concurrence in the Contracting Officer's revisions. The schedule into which these logic and time revisions have been incorporatedshall become the current schedule for continued evaluation of progress and the document which will be used to evaluate impact on the contractor's work for time extensions.

(f) Float or slack is defined as the amount of time between the early start date and the late start date, or the early finish date and the late finish date, of any of the activities in the NAS schedule.

(1) Float or slack is not time for the exclusive use or benefit of either the Government or the contractor.

(2) Extensions of time for performance required under the contract clauses FAR 52.243-4 - CHANGES, FAR 52.236-2 - DIFFERING SITE CONDITIONS, FAR 52.249-10 - DEFAULT (FIXED-PRICE CONSTRUCTION) or FAR 52.242-14 - SUSPENSION OF WORK will be granted only to the extent that equitable time adjustments for the activity or activities affected exceed the total float or slack along the channels involved.

(g) See SECTION 01330 SUBMITTAL PROCEDURES for requirement to control shop drawings and for requirement to report monthly on submittal items delaying job progress.

(h) Approval of the initial network is not necessarily an approval of the monetary amount or time duration for each activity as these amounts and duration are solely within the control of the contractor's management and staffing efforts. If at any time after approval of the system, the Contracting Officer finds that the monetary amount of an activity is not properly proportioned and reasonable, the contractor will reapportion the amount, at no additional cost to the Government, prior to payments.

(End of clause)

52.236-4014 CONTRACT DRAWINGS, MAPS, AND SPECIFICATIONS (OCT 1997) (Ref. DFARS 252.236-7001)

(a) The Government--

(1) For nonelectronic bid sets (paper copies):

(A) Will provide the Contractor, without charge, one set of full-size and half-size nonerasable vellum contract drawings and 10 sets of contract specifications except publications incorporated into the technical provisions by reference; and

(B) Will furnish additional sets on request, for the cost of reproduction.

(2) For electronic bid sets (CDs):

(A) Will provide the Contractor, without charge, one CD with amendment narrative(s) and contract drawings and specifications except publications incorporated into the technical provisions by reference; and

(B) Will furnish additional CDs on request, for the cost of reproduction.

(b) The Contractor shall--

(1) Check all drawings furnished immediately upon receipt;

(2) Compare all drawings and verify the figures before laying out the work;

(3) Promptly notify the Contracting Officer of any discrepancies; and
(4) Be responsible for any errors which might have been avoided by complying with this paragraph (b).
(c) Large scale drawings shall, in general, govern small scale drawings. Figures marked on drawings shall, in general, be followed in preference to scale measurements.
(d) Omissions from the drawings or specifications or the misdescription of details of work which are manifestly necessary to carry out the intent of the drawings and specifications, or which are customarily performed, shall not relieve the Contractor from performing such omitted or misdescribed details of the work, but shall be performed as if fully and correctly set forth and described in the drawings and specifications.
(e) The work shall conform to the specifications and the contract drawings identified on the index of drawings.

(End of clause)

52.239-4001 Year 2000 Compliance

The contractor shall ensure products provided under this contract, to include hardware, software, firmware, and middleware, whether acting alone or combined as a system, are Year 2000 compliant as defined as follows: Year 2000 compliant means with respect to information technology, that the information technology accurately processes date/time data (including, but not limited to, calculating, comparing, and sequencing) from, into, and between the twentieth and twenty-first centuries, and the years 1999 and 2000 and leap year calculations, to the extent that other information, used in combination with the information technology being acquired, properly exchanges date/time data with it.

52.239-4005 Year 2000 Compliance - Construction Contracts

a. In accordance with FAR 39.106, the contractor shall ensure that with respect to any design, construction, goods, or services under this contract as well as any subsequent task/delivery orders issued under this contract (if applicable), all information technology contained therein shall be Year 2000 compliant. Specifically:

The contractor shall:

(1) Perform, maintain, and provide an inventory of all major components to include structures, equipment, items, parts, and furnishings under this contract and each task/delivery order which may be affected by the Y2K compliance requirement.

(2) Indicate whether each component is currently Year 2000 compliant or requires an upgrade for compliance prior to government acceptance.

(End of Clause)

52.252-2 CLAUSES INCORPORATED BY REFERENCE (FEB 1998)

This contract incorporates one or more clauses by reference, with the same force and effect as if they were given in full text. Upon request, the Contracting Officer will make their full text available. Also, the full text of a clause may be accessed electronically at this/these address(es):

FAR web site - http://www.arnet.gov/far/
DFAR web site - http://www.acq.osd.mil/dp/dars/dfars.html
EFAR web site - http://www.hq.usace.army.mil/cepr/asp/main/parc.asp
Combined web site – http://web2.deskbook.osd.mil/

252.204-7004 REQUIRED CENTRAL CONTRACTOR REGISTRATION.(NOV 2001)

(a) Definitions.

As used in this clause--

(1) Central Contractor Registration (CCR) database means the primary DoD repository for contractor information required for the conduct of business with DoD.

(2) Data Universal Numbering System (DUNS) number means the 9-digit number assigned by Dun and Bradstreet Information Services to identify unique business entities.

(3) Data Universal Numbering System +4 (DUNS+4) number means the DUNS number assigned by Dun and Bradstreet plus a 4-digit suffix that may be assigned by a parent (controlling) business concern. This 4-digit suffix may be assigned at the discretion of the parent business concern for such purposes as identifying subunits or affiliates of the parent business concern.

(4) Registered in the CCR database means that all mandatory information, including the DUNS number or the DUNS+4 number, if applicable, and the corresponding Commercial and Government Entity (CAGE) code, is in the CCR database; the DUNS number and the CAGE code have been validated; and all edits have been successfully completed.

(b)(1) By submission of an offer, the offeror acknowledges the requirement that a prospective awardee must be registered in the CCR database prior to award, during performance, and through final payment of any contract resulting from this solicitation, except for awards to foreign vendors for work to be performed outside the United States.

(2) The offeror shall provide its DUNS or, if applicable, its DUNS+4 number with its offer, which will be used by the Contracting Officer to verify that the offeror is registered in the CCR database.

(3) Lack of registration in the CCR database will make an offeror ineligible for award.

(4) DoD has established a goal of registering an applicant in the CCR database within 48 hours after receipt of a complete and accurate application via the Internet. However, registration of an applicant submitting an application through a method other than the Internet may take up to 30 days. Therefore, offerors that are not registered should consider applying for registration immediately upon receipt of this solicitation.

(c) The Contractor is responsible for the accuracy and completeness of the data within the CCR, and for any liability resulting from the Government's reliance on inaccurate or incomplete data. To remain registered in the CCR database after the initial registration, the Contractor is required to confirm on an annual basis that its information in the CCR database is accurate and complete.

(d) Offerors and contractors may obtain information on registration and annual confirmation requirements by calling 1-888-227-2423, or via the Internet at http://www.ccr.com.

(End of clause)

SECTION 00800 Special Contract Requirements

CLAUSES INCORPORATED BY REFERENCE:

52.249-4001 I TIME EXTENSIONS FOR UNUSUALLY SEVERE WEATHER JAN 2000
(APR 1991 OCE)

CLAUSES INCORPORATED BY FULL TEXT

52.211-10 COMMENCEMENT, PROSECUTION, AND COMPLETION OF WORK (APR 1984)

The Contractor shall be required to (a) commence work under this contract within 5 calendar days after the date the Contractor receives the notice to proceed, (b) prosecute the work diligently, and (c) complete the entire work ready for use not later than 365 calendar days after notice to proceed. The time stated for completion shall include final cleanup of the premises.

(End of clause)

52.211-12 LIQUIDATED DAMAGES--CONSTRUCTION (SEP 2000)

(a) If the Contractor fails to complete the work within the time specified in the contract, the Contractor shall pay liquidated damages to the Government in the amount of $709.30 for each calendar day of delay until the work is completed or accepted.

(b) If the Government terminates the Contractor's right to proceed, liquidated damages will continue to accrue until the work is completed. These liquidated damages are in addition to excess costs of repurchase under the Termination clause.

(End of clause)

52.219-4002 REPORTING REQUIREMENTS--SUBCONTRACTING PLAN (CESAD-CT JUL 1993)

(a) Retainage will be withheld from progress payments in an amount sufficient to protect the Government's ability to assess Liquidated Damages in accordance with FAR clause 52.219-0016 for failure to submit timely SF 294 and SF 295 Reports. The amount of retainage will be determined in accordance with the following formula:
(b) Total dollar amount proposed for subcontracting to small business multiplied by percentage of actual progress on the contract, up to a maximum of 10% of the given progress payment, shall be withheld from the next progress payment due after a contractor fails to submit a required report. If one or more reports have been submitted before such failure, formula for determining the amount of retainage will be adjusted by deducting any amounts reported as subcontracted to small business from the total dollar amount proposed to be subcontracted and the difference multiplied by the percent of actual progress, up to a maximum of 10% of the given progress payment.
(End of clause)

52.223-4002 U.S. ARMY CORPS OF ENGINEERS SAFETY AND HEALTH REQUIREMENTS MANUAL, EM 385-1-1

This paragraph applies to contracts and purchase orders that require the contractor to comply with EM 385-1-1 (e.g., contracts that include the Accident Prevention clause at FAR 52.236-13 and/or other safety provisions). EM 385-1-1 and its changes are available at http://www.hq.usace.army.mil. (At the HQ homepage, select Safety and Occupational Health.) The Contractor shall be responsible for complying with the current edition and all changes

posted on the web through the date that is 10 calendar days prior to the date offers are due. If the solicitation is amended to extend the time set for receipt of offers, the 10 calendar days rule stated above shall be applied against the amended date. (For example, if offers are due on 10 April, all changes posted on or before 31 March shall apply to the contract. If the time for receipt of offers is extended from 10 April to 20 April, all changes posted on or before 10 April shall apply to the contract.)

52.228-4002 REQUIRED INSURANCE (FEB 1987 SAS) (Ref. FAR 28.307)

(a) The Contractor shall procure and maintain during the entire period of his performance under this contract the following minimum insurance:

Comprehensive and Employer's Liability Insurance in the amount required by the State law in which the work is to be performed under this contract.

Comprehensive General Liability Insurance in an amount not less than $500,000 per accident.

Automobile Liability Insurance: $200,000 per person and $500,000 per accident for bodily injury liability and $20,000 property damage liability.

(b) Prior to the commencement of work hereunder, the Contractor shall furnish to the Contracting Officer a certificate or written statement of the above-required insurance. The policies evidencing required insurance shall contain an endorsement to the effect that cancellation, or any material change in the policies adversely affecting the interests of the Government in such insurance, shall not be effective for such period as may be prescribed by the laws of the State in which this contract is to be performed and in no event less than 30 days after written notice thereof to the Contracting Officer.

(c) The Contractor agrees to insert the substance of this clause, including this subparagraph (c), in all subcontracts hereunder.

(End of clause)

52.232-4007 ACCOUNTING AND APPROPRIATION DATA (APR 1989 CESAS-RM)

See Section 00100, Instructions, Conditions, and Notice to Bidders, Clause 52.232.4006 I.

(End of clause)

52.232-4008 DESIGNATED BILLING OFFICE (APR 1989 CESAS-RM)

Invoices will be mailed to: Seymour Johnson AFB (CD-PSJ)
1095 Peterson Ave., Bldg 3300
Seymour Johnson AFB, NC 27531

(End of Clause)

52.232-4009 DESIGNATED PAYMENT OFFICE (AUG 1998 CESAS-RM-F)

Payment will be made by:
U.S. Army Corps of Engineers Finance Center
ATTN: CEFC-AO-P
5720 Integrity Drive
Millington, TN 38054-5005

(End of clause)

52.236-1 PERFORMANCE OF WORK BY THE CONTRACTOR (APR 1984)

The Contractor shall perform on the site, and with its own organization, work equivalent to at least twenty (20%) percent of the total amount of work to be performed under the contract. This percentage may be reduced by a supplemental agreement to this contract if, during performing the work, the Contractor requests a reduction and the Contracting Officer determines that the reduction would be to the advantage of the Government.

52.236-4 PHYSICAL DATA (APR 1984)

Data and information furnished or referred to below is for the Contractor's information. The Government shall not be responsible for any interpretation of or conclusion drawn from the data or information by the Contractor.

(a) The indications of physical conditions on the drawings and in the specifications are the result of site investigations by soil test borings and laboratory soils testing. Locations and drilling logs of the borings and results of the laboratory soils testing are shown on the contract drawings.

(b) Weather conditions . . . See Clause Time Extensions for Unusually Severe Weather Section 00800 52.2249-5010

(c) Transportation facilities . . The site of the work is available by Public Highway.

52.236-14 AVAILABILITY AND USE OF UTILITY SERVICES (APR 1984)

(a) The Government shall make all reasonably required amounts of utilities available to the Contractor from existing outlets and supplies, as specified in the contract. Unless otherwise provided in the contract, the amount of each utility service consumed shall be charged to or paid for by the Contractor at prevailing rates charged to the Government or, where the utility is produced by the Government, at reasonable rates determined by the Contracting Officer. The Contractor shall carefully conserve any utilities furnished without charge.

(b) The Contractor, at its expense and in a workmanlike manner satisfactory to the Contracting Officer, shall install and maintain all necessary temporary connections and distribution lines, and all meters required to measure the amount of each utility used for the purpose of determining charges. Before final acceptance of the work by the Government, the Contractor shall remove all the temporary connections, distribution lines, meters, and associated paraphernalia.

52.236-4015 PRECONSTRUCTION CONFERENCE (OCT 1988 SAS) (Ref. FAR 36.305)

(a) A preconstruction conference will be arranged by the Area/Resident Engineer after award of contract and before commencement of work. The Area/Resident Engineer will notify the Contractor of the time and date set for the meeting. At this conference, the Contractor shall be oriented with respect to Government procedures and line of authority, contractual, administrative, and construction matters.

(b) The Contractor shall bring to this conference, in completed form, a Certificate of Insurance, plus the following items in either completed or draft form:

Accident Prevention Plan (5 copies)
(use format shown in Attachment 1 to SECTION 00800)
Quality Control Plan (5 copies)
Letter Appointing Superintendent
Transmittal Register
Power of Attorney and Certified Copy of Resolution
Network Analysis System, when applicable
List of Subcontractors

(c) A letter of record will be written documenting all items discussed at the conference, and a copy will be furnished by the Area/Resident Engineer

to all in attendance.
(End of clause)

52.236-4016 VIDEO TAPING OPERATING AND MAINTENANCE INSTRUCTIONS (MAR 1987 SASCD-SQ)

For all of the operating and maintenance instructions which are required in the contract specifications, the Contractor shall video tape these instructions as they are presented to the Government representatives. These tapes shall provide clear and understandable detailed instructions for all items required by the contract specifications. The tapes shall be prepared by an experienced video director/cameraman using good quality half-inch VHS color tape with correct sound equipment, lighting, and backdrop. The sound and picture quality shall be high and subject to approval by the Contracting Officer. The tapes are intended as followup training for other Government representatives at a later date. They must be suitable for this purpose. The Contractor shall be responsible for the contents of the instructions and shall verify that they are correct prior to taping. The Contractor may submit individual equipment manufacturer's instructional tape(s), provided they meet the above qualifications and cover the actual equipment that is installed. The tape(s) shall be for specific equipment identified by contents and contract name and number. The Contractor shall submit one copy of the tape(s) to the Contracting Officer for review and approval. Unacceptable tapes are to be corrected by the Contractor as indicated by the Contracting Officer at no additional cost to the Government.
(End of clause)

52.236-4017 SUBMITTAL OF MODIFICATION COST ESTIMATE PROPOSALS (MAR 1992 SAS)
(Ref. DFARS 52.236-7000)

When submittals of Cost Estimate Proposals are required for additions or deletions to work under this contract by modification, the Contractor shall use DA Form 5418-R titled "Cost Estimate Analysis" (see Attachment 1 to SECTION 00800). A separate assemblage will be prepared for submittal by each trade affected by the proposed work.
(End of clause)

52.246-12 INSPECTION OF CONSTRUCTION (AUG 1996)

(a) Definition. "Work" includes, but is not limited to, materials, workmanship, and manufacture and fabrication of components.

(b) The Contractor shall maintain an adequate inspection system and perform such inspections as will ensure that the work performed under the contract conforms to contract requirements. The Contractor shall maintain complete inspection records and make them available to the Government. All work shall be conducted under the general direction of the Contracting Officer and is subject to Government inspection and test at all places and at all reasonable times before acceptance to ensure strict compliance with the terms of the contract.

(c) Government inspections and tests are for the sole benefit of the Government and do not--

(1) Relieve the Contractor of responsibility for providing adequate quality control measures;

(2) Relieve the Contractor of responsibility for damage to or loss of the material before acceptance;

(3) Constitute or imply acceptance; or

(4) Affect the continuing rights of the Government after acceptance of the completed work under paragraph (i) of this section.

(d) The presence or absence of a Government inspector does not relieve the Contractor from any contract requirement, nor is the inspector authorized to change any term or condition of the specification without the Contracting Officer's written authorization.

(e) The Contractor shall promptly furnish, at no increase in contract price, all facilities, labor, and material reasonably needed for performing such safe and convenient inspections and tests as may be required by the Contracting Officer. The Government may charge to the Contractor any additional cost of inspection or test when work is not ready at the time specified by the Contractor for inspection or test, or when prior rejection makes reinspection or retest necessary. The Government shall perform all inspections and tests in a manner that will not unnecessarily delay the work. Special, full size, and performance tests shall be performed as described in the contract.

(f) The Contractor shall, without charge, replace or correct work found by the Government not to conform to contract requirements, unless in the public interest the Government consents to accept the work with an appropriate adjustment in contract price. The Contractor shall promptly segregate and remove rejected material from the premises.

(g) If the Contractor does not promptly replace or correct rejected work, the Government may (1) by contract or otherwise, replace or correct the work and charge the cost to the Contractor or (2) terminate for default the Contractor's right to proceed.

(h) If, before acceptance of the entire work, the Government decides to examine already completed work by removing it or tearing it out, the Contractor, on request, shall promptly furnish all necessary facilities, labor, and material. If the work is found to be defective or nonconforming in any material respect due to the fault of the Contractor or its subcontractors, the Contractor shall defray the expenses of the examination and of satisfactory reconstruction. However, if the work is found to meet contract requirements, the Contracting Officer shall make an equitable adjustment for the additional services involved in the examination and reconstruction, including, if completion of the work was thereby delayed, an extension of time.

(i) Unless otherwise specified in the contract, the Government shall accept, as promptly as practicable after completion and inspection, all work required by the contract or that portion of the work the Contracting Officer determines can be accepted separately. Acceptance shall be final and conclusive except for latent defects, fraud, gross mistakes amounting to fraud, or the Government's rights under any warranty or guarantee.

52.246-21 WARRANTY OF CONSTRUCTION (MAR 1994)

(a) In addition to any other warranties in this contract, the Contractor warrants, except as provided in paragraph (i) of this clause, that work performed under this contract conforms to the contract requirements and is free of any defect in equipment, material, or design furnished, or workmanship performed by the Contractor or any subcontractor or supplier at any tier.

(b) This warranty shall continue for a period of 1 year from the date of final acceptance of the work. If the Government takes possession of any part of the work before final acceptance, this warranty shall continue for a period of 1 year from the date the Government takes possession.

(c) The Contractor shall remedy at the Contractor's expense any failure to conform, or any defect. In addition, the Contractor shall remedy at the Contractor's expense any damage to Government-owned or controlled real or personal property, when that damage is the result of--

(1) The Contractor's failure to conform to contract requirements; or

(2) Any defect of equipment, material, workmanship, or design furnished.

(d) The Contractor shall restore any work damaged in fulfilling the terms and conditions of this clause. The Contractor's warranty with respect to work repaired or replaced will run for 1 year from the date of repair or replacement.

(e) The Contracting Officer shall notify the Contractor, in writing, within a reasonable time after the discovery of any failure, defect, or damage.

(f) If the Contractor fails to remedy any failure, defect, or damage within a reasonable time after receipt of notice, the Government shall have the right to replace, repair, or otherwise remedy the failure, defect, or damage at the Contractor's expense.
(g) With respect to all warranties, express or implied, from subcontractors, manufacturers, or suppliers for work performed and materials furnished under this contract, the Contractor shall--

(1) Obtain all warranties that would be given in normal commercial practice;

(2) Require all warranties to be executed, in writing, for the benefit of the Government, if directed by the Contracting Officer; and

(3) Enforce all warranties for the benefit of the Government, if directed by the Contracting Officer.

(h) In the event the Contractor's warranty under paragraph (b) of this clause has expired, the Government may bring suit at its expense to enforce a subcontractor's, manufacturer's, or supplier's warranty.

(i) Unless a defect is caused by the negligence of the Contractor or subcontractor or supplier at any tier, the Contractor shall not be liable for the repair of any defects of material or design furnished by the Government nor for the repair of any damage that results from any defect in Government-furnished material or design.

(j) This warranty shall not limit the Government's rights under the Inspection and Acceptance clause of this contract with respect to latent defects, gross mistakes, or fraud.

(End of clause)

52.249-4001 TIME EXTENSIONS FOR UNUSUALLY SEVERE WEATHER (APR 1991 OCE)
(Ref. FAR 52.249-10)

(a) This provision specifies the procedure for the determination of time extensions for unusually severe weather in accordance with the contract clause entitled DEFAULT (FIXED-PRICE CONSTRUCTION). In order for the Contracting Officer to award a time extension under this clause, the following conditions must be satisfied:
(1) The weather experienced at the project site during the contract period must be found to be unusually severe, that is, more severe than the adverse weather anticipated for the project location during any given month.
(2) The unusually severe weather must actually cause a delay to the completion of the project. The delay must be beyond the control and without the fault or negligence of the Contractor.
(b) The following schedule of monthly anticipated adverse weather delays is based on National Oceanic and Atmospheric Administration (NOAA) or similar data for the project location and will constitute the base line for monthly weather time evaluations. The Contractor's progress schedule must reflect these anticipated adverse weather delays in all weather dependent activities.

MONTHLY ANTICIPATED ADVERSE WEATHER DELAY
WORKDAYS BASED ON 5-DAY WORK WEEK

JAN	FEB	MAR	APR	MAY	JUN	JUL	AUG	SEP	OCT	NOV	DEC
10	9	6	4	5	6	8	7	4	4	5	9

(c) Upon acknowledgment of the Notice to Proceed and continuing through-out the contract, the Contractor will record on the daily Contractor Quality Control report the occurrence of adverse weather and resultant impact to normally scheduled work. Actual adverse weather delay days must prevent work on critical activities for 50 percent or more of the Contractor's scheduled workday. The number of actual adverse weather delay days shall include days impacted by actual adverse weather (even if adverse weather occurred in previous month), be calculated chronologically from the first to the last day in each month, and be recorded as full days. If the number of actual adverse weather delay days exceeds the number of days anticipated in paragraph (b) above, the Contracting Officer will convert any qualifying delays to calendar days, giving full consideration for equivalent fair weather workdays, and issue a modification in accordance with the contract clause entitled DEFAULT (FIXED PRICE CONSTRUCTION).

(End of clause)

52.249-5000 BASIS FOR SETTLEMENT OF PROPOSALS - EFARS

Actual costs will be used to determine equipment costs for a settlement proposal submitted on the total cost basis under FAR 49.206-2(b). In evaluating a terminations settlement proposal using the total cost basis, the following principles will be applied to determine allowable equipment costs:

(1) Actual costs for each piece of equipment, or groups of similar serial or series equipment, need not be available in the contractor's accounting records to determine total actual equipment costs.

(2) If equipment costs have been allocated to a contract using predetermined rates , those charges will be adjusted to actual costs.

(3) Recorded job costs adjusted for unallowable expenses will be used to determine equipment operating expenses.

(4) Ownership costs (depreciation) will be determined using the contractor's depreciation schedule (subject to the provisions of FAR 31.205-11).

(5) License, taxes, storage and insurance costs are normally recovered as an indirect expense and unless the contractor charges these costs directly to contracts, they will be recovered through the indirect expense rate.

(End of Clause)

ATTACHMENT 1 TO SECTION 00800

LIST OF ATTACHMENTS

1. Contract Drawings:

   File No. 422-80-01, Sheets 1 through 127

2. Rates of Wages:

3. Formats:

   Sign and Erection Details

   Corps of Engineers Logo

   Accident Prevention Plan (Ref. FAR 52.236-13 and EM 385-1-1)

   Construction Quality Control Report

   Small and Disadvantaged Business Subcontracting Plan

   Weekly Temporary Electrical Inspection

4. Minimum Standard for Temporary Electrical Service (Ref. FAR 52.236-14)

5. Forms:

   SAS Form 9 - Activity Hazard Analysis

   SAD Form 1666a-R - Safety Checklist for Crawler, Truck & Wheel Mounted Cranes

   SAD Form 1666b-R - Safety Checklist for Portal, Tower, and Pillar Cranes

   SAD Form 1666c-R - Safety Checklist for Rigging

   SAD Form 1666d-R - Safety Checklist for Motor Vehicles, Trailers and Trucks

   SAD Form 1666e-R - Safety Checklist for Crawler Tractors and Dozers

   SAD Form 1666f-R - Safety Checklist for Scrapers, Motor Graders, and Other Mobile Equipment

   SAD Form 1666g-R - Safety Checklist for Material Hoists

   SAD Form 1666h-R - Safety Checklist for Earth Drilling Equipment

   ENG Form 4025 - Transmittal of Shop Drawings, Equipment Data, Material Samples, or Manufacturer's Certificates of Compliance

   DA Form 5418-R - Cost Estimate Analysis

   Standard Form LLL-A - Disclosure of Lobbying Activities

   Real Property Inventory

-- - -- --

General Decision Number NC010053

General Decision Number NC010053
Superseded General Decision No. NC000053
State: **North Carolina**
Construction Type:
BUILDING
County(ies):
WAYNE
BUILDING CONSTRUCTION PROJECTS (does not include residential construction consisting of single family homes and apartments up to and including 4 stories)

Modification Number	Publication Date
0	03/02/2001

COUNTY(ies):
WAYNE
SUNC1032A 03/13/1997

	Rates	Fringes
ACOUSTICAL CEILING MECHANIC	11.50	.43
CARPENTER (Excluding formwork,batt/ blown insulation, acoustical ceiling installation, carpet laying, overhead doors, and drywall hanging	10.62	1.08
CEMENT MASON	10.66	.95
DRYWALL FINISHER	12.00	
DRYWALL HANGER	12.00	.63
ELECTRICIAN (Excluding HVAC control wiring)	10.88	.93
GLAZIER	10.41	1.42
HVAC MECHANIC	13.75	1.13
IRONWORKER-STRUCTURAL	10.15	.97
LABORERS:		
Unskilled	6.95	
Landscape Worker	7.31	
OVERHEAD DOOR INSTALLER	9.50	.52
PAINTER (including paperhanging, excluding drywall finishing	9.00	.35
PLUMBER (Excluding HVAC piping)	11.59	1.67
POWER EQUIPMENT OPERATORS:		
Backhoe	10.00	
Dozer	10.00	
Grader	13.83	
ROOFER	8.42	.26
SHEETMETAL WORKER (Excluding HVAC duct work)	10.34	1.06
TRUCK DRIVER-TANDEM DUMP	10.00	

WELDERS - Receive rate prescribed for craft performing operation to which welding is incidental.

==========

Unlisted classifications needed for work not included within the scope of the classifications listed may be added after award only as provided in the labor standards contract clauses (29 CFR 5.5(a)(1)(v)).

In the listing above, the "SU" designation means that rates listed under that identifier do not reflect collectively bargained wage and fringe benefit rates. Other designations indicate unions whose rates have been determined to be prevailing.

WAGE DETERMINATION APPEALS PROCESS

1.) Has there been an initial decision in the matter? This can be:

* an existing published wage determination
* a survey underlying a wage determination
* a Wage and Hour Division letter setting forth a position on a wage determination matter
* a conformance (additional classification and rate) ruling

On survey related matters, initial contact, including requests for summaries of surveys, should be with the Wage and Hour Regional Office for the area in which the survey was conducted because those Regional Offices have responsibility for the Davis-Bacon survey program. If the response from this initial contact is not satisfactory, then the process described in 2.) and 3.) should be followed.

With regard to any other matter not yet ripe for the formal process described here, initial contact should be with the Branch of Construction Wage Determinations. Write to:

Branch of Construction Wage Determinations
Wage and Hour Division
U. S. Department of Labor
200 Constitution Avenue, N. W.
Washington, D. C. 20210

2.) If the answer to the question in 1.) is yes, then an interested party (those affected by the action) can request review and reconsideration from the Wage and Hour Administrator (See 29 CFR Part 1.8 and 29 CFR Part 7). Write to:

Wage and Hour Administrator
U.S. Department of Labor
200 Constitution Avenue, N. W.
Washington, D. C. 20210

The request should be accompanied by a full statement of the interested party's position and by any information (wage payment data, project description, area practice material, etc.) that the requestor considers relevant to the issue.

3.) If the decision of the Administrator is not favorable, an interested party may appeal directly to the Administrative Review Board (formerly the Wage Appeals Board). Write to:

Administrative Review Board
U. S. Department of Labor
200 Constitution Avenue, N. W.
Washington, D. C. 20210

4.) All decisions by the Administrative Review Board are final.

END OF GENERAL DECISION

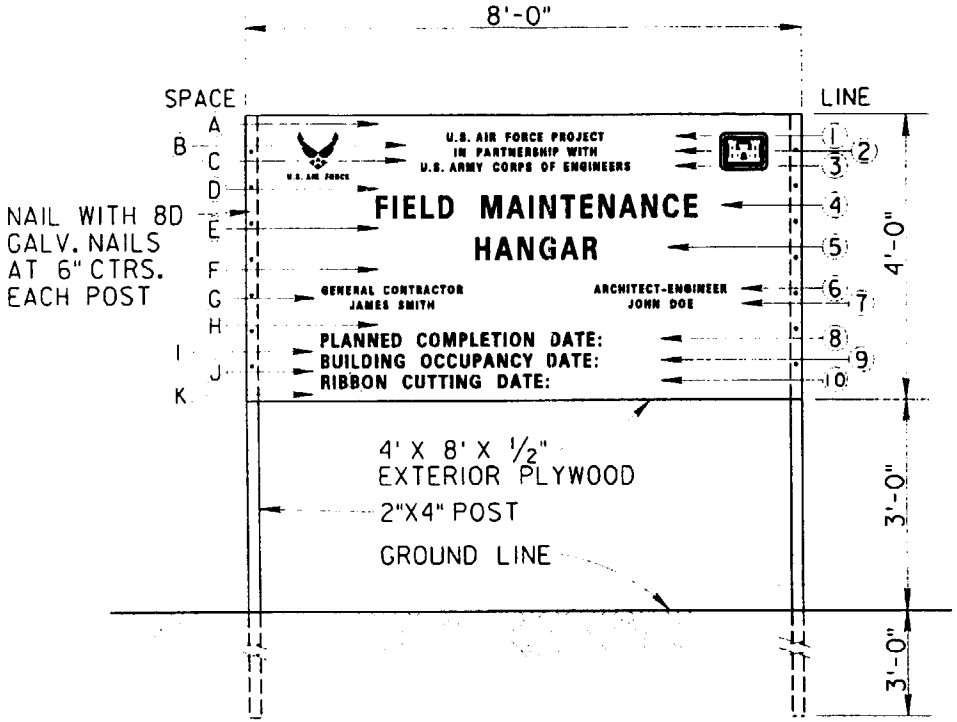

FRONT VIEW

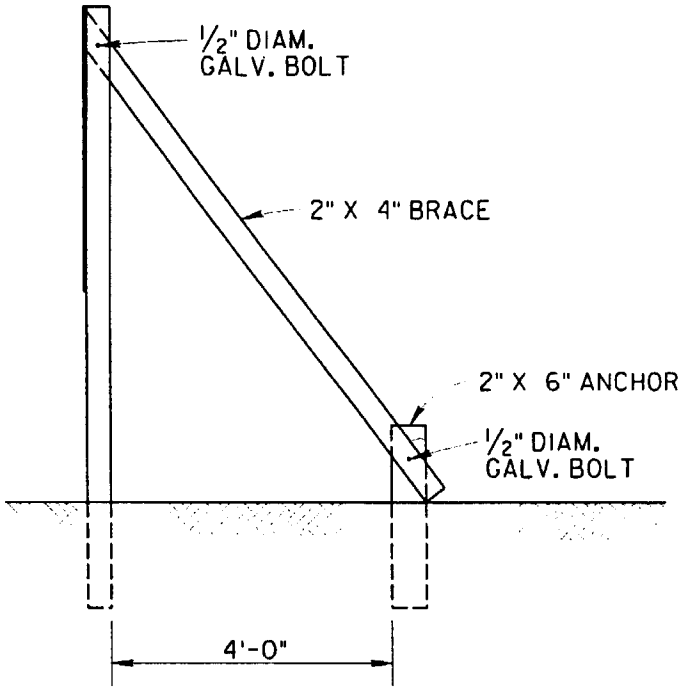

END VIEW

U.S. AIR FORCE PROJECT SIGN DETAILS

NOTES:

1. POSTS SHALL BE S4S.
2. PLYWOOD SHALL BE EXTERIOR TYPE, A-C GRADE.
3. BEFORE PAINTING, SURFACE SHALL BE CLEAN, DRY, FREE OF GREASE AND SANDED.
4. PAINT WITH ONE EXTERIOR OIL PRIME COAT AND EXTERIOR TYPE ALKYD, CONFORMING TO MASTER PAINTERS INSTITUTE MPI-9, MPI GLOSS LEVEL 6. COLOR SHALL MATCH SHERWIN WILLIAMS SW 2175.
5. ALL LETTERING SHALL BE EXTERIOR TYPE ALKYD. COLOR SHALL MATCH SHERWIN WILLIAMS SW 1900.
6. DECALOMANIA FOR CORPS OF ENGINEERS INSIGNIA AND U.S. AIR FORCE EMBLEM WILL BE FURNISHED BY THE CONTRACTING OFFICER FOR INSTALLATION BY THE CONTRACTOR.
7. ALL EXPOSED WOOD (POSTS, SUPPORTS, BACK, ETC.) SHALL BE PAINTED THE SAME BACKGROUND COLOR AS THE SIGN.
8. LETTERING STYLE SHALL BE EITHER HELIOS EXTRA BOLD CONDENSED, HELIOS BOLD II, HELVETICA BLACK ROMAN, OR HELVETICA BOLD ROMAN.

SCHEDULE

SPACE	HEIGHT	LINE	DESCRIPTION	LETTER HEIGHT	STROKE
A	3"	1	U.S. AIR FORCE PROJECT	1.5"	3/16"
B	1"	2	IN PARTNERSHIP WITH	1.5"	3/16"
C	1"	3	U.S. ARMY CORPS OF ENGINEERS	1.5"	3/16"
D	4"	4	PROJECT NAME	4"	1/2"
E	3"	5	PROJECT NAME CONT'D (IF REQ'D)	4"	1/2"
F	4"	6	GENERAL CONTRACTOR/A-E	1.5"	3/16"
G	1"	7	GENERAL CONTRACTOR/A-E	1.5"	3/16"
H	4"	8	PLANNED COMPLETION DATE	2.5"	1/4"
I	1"	9	BUILDING OCCUPANCY DATE	2.5"	1/4"
J	1"	10	RIBBON CUTTING DATE	2.5"	1/4"
K	2"				

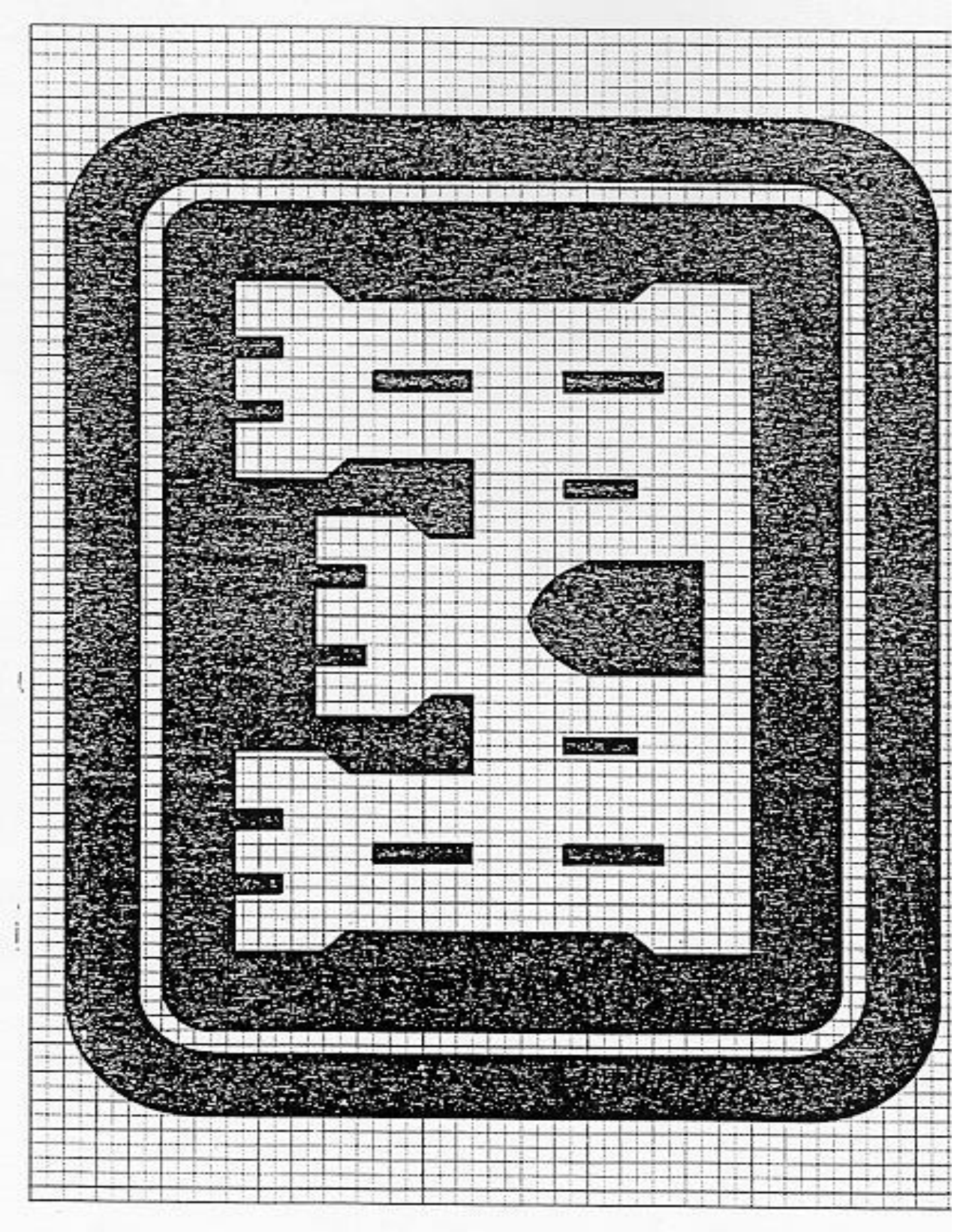

CORPS OF ENGINEERS LOGO
HALF SIZE

Last revised 9 May 97

FORMAT
(Ref. FAR 52.236-13 and EM 385-1-1 dated 3 Sep 96)
ACCIDENT PREVENTION PLAN

MINIMUM BASIC OUTLINE FOR ACCIDENT PREVENTION PLAN

An accident prevention plan is, in essence, a safety and health policy and program document. The following areas are typically addressed in an accident prevention plan, but a plan shall be job specific and shall also address any unusual or unique aspects of the project or activity for which it is written.

The accident prevention plan shall interface with the employer's overall safety and health program. Any portions of the overall safety and health program that are referenced in the accident prevention plan shall be included as appropriate.

1. SIGNATURE SHEET. Title, signature, and phone number of the following:

a. Plan preparer (corporate safety staff person, QC);

b. Plan approval, e.g., owner, company president, regional vice president (HTRW activities require approval of a Certified Industrial Hygienist (or qualified Industrial Hygiene personnel for in-house USACE activities; a Certified Safety Professional (or qualified USACE safety personnel for in-house work) may approve the plan for operations involving UST removal where contaminants are known to be petroleum, oils, or lubricants);

c. Plan concurrence (provide concurrence of other applicable corporate and project personnel (contractor)), e.g., Corporate Chief of Operations, Corporate Chief of Safety, Corporate Industrial Hygienist, project manager or superintendent, project safety professional, project QC.

The plan will be developed by qualified personnel (plan preparer) and will be signed by a competent person (plan concurrence) and a representative of the prime contractor=s project management team (plan approval).

2. BACKGROUND INFORMATION. List the following:

a. Contractor;

b. Contract number;

c. Project name;

d. Brief project description, description of work to be performed, and location (map);

e. Contractor accident experience (provide information such as EMR, OSHA 200 Forms, corporate safety trend analyses);

f. Listing of phases of work and hazardous activities requiring activity hazards analyses.

3. STATEMENT OF SAFETY AND HEALTH POLICY. (In addition to the corporate policy statement, a copy of the corporate safety program may provide a significant portion of the information required by the accident prevention plan.)

4. RESPONSIBILITIES AND LINES OF AUTHORITIES.

a. Identification and accountability of personnel responsible for safety - at both corporate and project level (contracts specifically requiring safety or industrial hygiene personnel should include a copy of their resume - the District Safety and Occupational Health Office will review the qualifications for acceptance). For items in EM 385-1-1 which require the use of a Acompetent person@ or a Aqualified person@, the contractor is to maintain documentation demonstrating the competence or qualification of that individual.

b. Lines of authority

5. SUBCONTRACTORS AND SUPPLIERS. Provide the following:

a. Identification of subcontractors and suppliers (if known);

b. Means for controlling and coordinating subcontractors and suppliers;

c. Safety responsibilities of subcontractors and suppliers.

6. TRAINING.

a. List subjects to be discussed with employees in safety indoctrination.

b. List mandatory training and certifications which are applicable to this project (e. g., explosive actuated tools, confined space entry, crane operator, diver, vehicle operator, HAZWOPER training and certification, personal protective equipment) and any requirements for periodic retraining/recertification.

c. Identify requirements for emergency response training.

d. Outline requirements (who attends, when given, who will conduct etc.) for supervisory and employee safety meetings.

e. Identify location at the project site where the records will be maintained.

7. SAFETY AND HEALTH INSPECTIONS. Provide details on:

a. Who will conduct safety inspections (e.g., project manager, safety professional, QC, supervisors, employees, etc.), when inspections will be conducted, how the inspections will be recorded, deficiency tracking system, follow-up procedures, etc;

b. Any external inspections/certifications which may be required (e.g., Coast Guard).

8. SAFETY AND HEALTH EXPECTATIONS, INCENTIVE PROGRAMS, AND COMPLIANCE.

a. The company's written safety program goals, objectives, and accident experience goals for this contract should be provided.

b. A brief description of the company's safety incentive programs (if any) should be provided.

c. Policies and procedures regarding noncompliance with safety requirements (to include disciplinary actions for violation of safety requirements) should be identified.

d. Provide written company procedures for holding managers and supervisors accountable for safety.

9. ACCIDENT REPORTING. The contractor shall identify who shall complete the following, how, and when:

a. Exposure data (man-hours worked);

b. Accident investigations, reports and logs;

c. Immediate notification of major accidents.

10. MEDICAL SUPPORT. Outline on-site medical support and off-site medical arrangements.

11. PERSONAL PROTECTIVE EQUIPMENT. Outline procedures (who, when, how) for conducting hazard assessments and written certifications for use of personal protective equipment.

12. PLANS (PROGRAMS, PROCEDURES) REQUIRED BY THE SAFETY MANUAL (as applicable).

a. Hazard communication program (01.B.04);

b. Emergency response plans:
- procedures and tests (01.E.01)
- spill plans (01.E.01, 06.A.02)
- fire fighting plan (01.E.01, 19.A.04)
- posting of emergency telephone numbers (01.E.04)
- wildfire prevention plan (09.K.01)
- man overboard/abandon ship (19.A.04)

c. Layout plans (04.A.01);

d. Respiratory protection plan (05.E.01);

e. Health hazard control program (06.A.02);

f. Lead abatement plan (06.B.05 & specifications);

g. Asbestos abatement plan (06.B.05 & specifications);

h. Abrasive blasting (06.H.01);

1. Confined space (06.1);

j. Hazardous energy control plan (12.A.07);

k. Critical lift procedures (16.C.17);

1. Contingency plan for severe weather (19.A.03);

m. Access and haul road plan (22.1.10);

n. Demolition plan (engineering and asbestos surveys) (23.A.01);

o. Emergency rescue (tunneling) (26.A.05);

p. Underground construction fire prevention and protection plan (26.D.01);

q. Compressed air plan (26.1.01);

r. Formwork and shoring erection and removal plans (27.B.02);

s. Lift slab plans (27.D.01);

t. SHP and SSHP (for HTRW work an SSHP must be submitted and shall contain all information required by the accident prevention plan - two documents are not required (28.B.01);

u. Blasting plan (29.A.01);

v. Diving plan (30.A.13);

w. Plan for prevention of alcohol and drug abuse (Defense Federal Acquisition Regulation Supplement Subpart 252.223-7004, Drug-Free Work Force).

13. The Contractor shall provide information on how they will meet the requirements of major sections of EM 385-1-1 in the accident prevention plan. Particular attention shall be paid to excavations, scaffolding, medical and first aid requirements, sanitation, personal protective equipment, fire prevention, machinery and mechanized equipment, electrical safety, public safety requirements, and chemical, physical agent, and biological occupational exposure prevention requirements. Detailed site specific hazards and controls shall be provided in the activity hazard analysis for each phase of the operation. Site specific hazards are those hazards which would be reasonably be anticipated to occur on the construction site of concern and will be identified through analysis of the activities to be performed. The controls are measures which will be implemented by the contractor to eliminate or reduce each hazard to an acceptable level.

F O R M A T

CONTRACTOR'S NAME
(Address)

CONSTRUCTION QUALITY CONTROL REPORT

Date: _____ Report No. _____

Contract No.: _____

Description and Location of Work: _____

WEATHER: (Clear)(P. Cloudy)(Cloudy); Temperature:___Min,___Max;
Rainfall ___Inches

Contractor/Subcontractors and Area of Responsibility
a._____
b._____
c._____
d._____
e._____
f._____
g._____
h._____

1. Work Performed Today:

(Indicate location and description of work performed. Refer to work performed by prime and/or subcontractors by letter in table above.)

_____

2. Results of Control Activities:

(Indicate whether: P-Preparatory, I-Initial, or F-Followup and include satisfactory work completed or deficiencies with action to be taken.)

_____

3. Test Required by Plans and/or Specifications Performed and Results of Tests:

_____

4. Monitoring of Materials and Equipment:

---

5. Offsite Surveillance Activities:

---

6. Job Safety:

(Daily comment required.)

---

7. Remarks:

a. (Cover any conflicts in plans, specifications or instructions.)

b. (Action taken in review of submittal.)

c. (Verbal instructions received.)

_____
Inspector

CONTRACTOR'S VERIFICATION:

The above report is complete and correct and all material and equipment used and work performed during this reporting period are in compliance with the contract plans and specifications except as noted above.

_____
Contractor's Approved
Authorized Representative

*1

SMALL AND DISADVANTAGED BUSINESS SUBCONTRACTING PLAN

KERRY ENTERPRISES

DATE: December 13, 2000

SOLICITATION NO. DACA21-01-R-0001

TITLE: Construct New Child Care Facility and Physical Fitness Center, Pleasure Palace Complex, Washington, D.C.

Type of Work: Design and Construction

In accordance with applicable contract clauses of the solicitation noted above, Kerry Enterprises submits the following Subcontracting Plan for Small, Veteran-Owned, HUBZone, Small Disadvantaged, and Women-Owned Small Business Concerns.

It is company policy to follow all public laws including P.L. 99-661, Section 1207, P.L. 100-180, Section 806, P.L. 105-135 and P.L. 106-50. We have informed all purchasers to follow these laws in hiring subcontractors and buying materials.

1. The following percentaged goals (expressed in terms of percentaged of the total dollars available for subcontract/purchase order award) would be applicable to a contract awarded under the cited solicitation. You must also provide the dollar amounts for each of the goals listed below.

    a. Total Proposed Contract Amount: $26,961,000

    b. Large Business: $6,740,250 - 25%

    c. Total amount available for Subcontract award: $18,300,000

    d. Amount to be subcontracted to all small business: $11,236,200 - 61.4%

    e. Small Disadvantaged Business: $1,665,300 - 9.1%

    f. Women-Owned Small Business: $915,000 - 5%

    g. HUBZone Small Business: $457,500 – 2.5%

    h. Veteran-Owned Small Business: $549,000 - 3%

1 (Revised by Amendment No. 0001)

i. There are no options in this solicitation. ***(NOTE: If there are options in the solicitation you must provide the same information as listed in paragraph 1 a-h for each option.)***

j. Indirect and overhead costs have not been included in the goals specified in this section for amounts available for subcontract/purchase order award.

k. Consideration was given to HCBU/MI's but no opportunities were found to be included in the small disadvantaged business goals.

2. The following principal products and/or services will be subcontracted under this contract, and the distribution among Small, Veteran-Owned, HUBZone, Small Disadvantaged, and Women-Owned Small Business Concerns
are as follows:

Earthwork	***Windows and Storm Doors	*Recreation
Site Utilities	Plumbing Materials	Equipment
Asphalt	Electrical	****Doors
Window Treatment	*HVAC	*House Concrete
****Vinyl Siding	*Insulation	*Gutters
Carpentry	*Ceramic Tile	*Termite Control
Fencing	*Appliances	*****Drywall
*Floor Covering	**Roofing	*Finish Hardware
**Painting	*Sheet Metal	**Site Concrete

NOTE: Large business concerns are annotated without an asterisk, Small business concerns are annotated by one*, Veteran-Owned small business concerns are annotated by two **, HUBZone business concerns are annotated by three ***, small disadvantaged business concerns are annotated by four ****, and women-owned small business concerns are annotated by five *****. ***(Company names should be provided for each product and/or service.)***

The following method was utilized in developing our subcontracting goals: (1) All areas of potential subcontract work were determined to be available for subcontract award to small, veteran-owned, HUBZone, small disadvantaged, and women-owned small business concerns and such firms will be encouraged to compete for award in each of the areas described in section 2 above, and (2) qualified small, veteran-owned, HUBZone, small disadvantaged, and women-owned small business concerns will be actively recruited for participation through the many sources described hereinafter.

3. The following individual will administer this Subcontract Plan on behalf of Kerry Enterprises:

Name: Candice Kerry Title: Executive Vice President

Address and Telephone Number: 4101 North Sea
Heaven Street
Washington, DC 20314-1000
202-555-1212

The individual's specific duties with regard to the conduct of our firm's Subcontracting Plan will include, but will not be limited to the following:

a. Developing and maintaining bidders lists of small, veteran-owned, HUBZone, small disadvantaged, and women-owned small business concerns using sources such as the Pronet System developed by the Small Business Administration, the Minority Business Development Agency of the U.S. Department of Commerce, Local Minority Business Development Centers and Minority Contractor Associations, and the General Business Services Center in the project's Standard Metropolitan Statistical Area.

b. Assuring the inclusion of small, veteran-owned, HUBZone, small disadvantaged, and women-owned small business concerns in all solicitations for products or services which they are capable of providing; and ensuring that all solicitations are structured to permit the maximum possible participation by small, veteran-owned, HUBZone, small disadvantaged, and women-owned small business concerns.

c. Establishing and maintaining records of all solicitations and subcontract awards to ensure that the members of the firm who review bidders proposals document their reasons for selecting or not selecting a bid submitted by a small, veteran-owned, HUBZone, small disadvantaged, or women-owned small business concern, and monitoring the firm's progress toward and achievement of its percentage goals.

d. Preparing and submitting the Subcontracting Report for Individual Contracts (SF 294) and the Summary Subcontract Report (SF 295) in accordance with the instructions provided on the forms, and coordinating and preparing for all compliance reviews by Federal agencies.

e. Conducting or arranging for all other activities necessary to further the intent and attainment of goals of the Plan to include motivational training of the firm's purchasing personnel attendance at workshop, seminars and trade fairs conducted by or on behalf of small business, veteran-owned, HUBZone, small disadvantaged business, and/or women-owned small business concerns; and general cooperation with members of small business, veteran-owned, HUBZone, small disadvantage business, or women small business concerns or their representatives.

4. The following steps will be taken to ensure that small, veteran-owned, HUBZone, small disadvantaged, and women-owned small business concerns receive notice and have an equitable opportunity to compete for intended awards of subcontracts and/or purchase orders for the products and/or services described in section 1 b. above:

a. Sources will be requested through the SBA's ProNet system, business development organizations, minority, women-owned and small business trade associations and at small, minority, and women-owned small business procurement conferences; sources will be contacted; and bidding materials will be provided to all responding parties with interest.

b. Internally, motivational training will be conducted to guide and encourage purchasing personnel; source lists and guides to small, veteran-owned, HUBZone, small disadvantaged, and women-owned small business concerns will be maintained and utilized by purchasing personnel while soliciting subcontracts and purchase orders; activities will be monitored to ensure sufficient time is allowed for interested bidders to prepare their bids and to evaluate continuing compliance with this Subcontracting Plan.

5. KERRY ENTERPRISES agrees that the clause entitled "Utilization of Small Business Concerns, Veteran-Owned Business Concerns, HUBZone Small Business Concerns, Small Disadvantaged Business Concerns and Women-Owned Business Concerns" will be included in all subcontracts which offer further subcontracting opportunities. All subcontractors, except small business concerns, who receive subcontracts in excess of $500,000 ($1,000,000 in the case of construction) will be required to adopt and comply with a subcontracting plan similar to this one. Such plans will be reviewed to assure that all minimum requirements of an acceptable subcontracting plan have been satisfied.

The acceptability of percentaged goals shall be determined on a case-by-case basis depending on the supplies/services involved, the availability of potential small, veteran-owned, HUBZone, small disadvantaged, and women-owned small subcontractors, and prior experience. Once approved and implemented, plans will be monitored through the submission of periodic reports or, as time and availability of funds permit, periodic visits to subcontractor's facilities to review applicable records and subcontracting program progress.

6. KERRY ENTERPRISES agrees to submit such periodic reports and cooperate in any studies or surveys as may be required by the Contracting agency or the Small Business Administration in order to determine the extent of compliance by the offeror with the subcontracting plan and with the clause entitled "Utilization of Small Business Concerns, Veteran-Owned Small Business Concerns, HUBZone Small Business Concerns, Small Disadvantaged Business Concerns and Women-Owned Small Business Concerns" contained in the solicitation.

7. KERRY ENTERPRISES agrees to maintain at least the following types of records to document compliance with this Subcontracting Plan:

a. The names of all organizations, agencies, and associations contacted for small, veteran-owned, HUBZone, small disadvantaged, and women-owned small business sources, along with records of attendance at conferences, seminars and trade fairs where additional sources were developed.

b. Source lists, guides, and other data identifying small business, veteran-owned, HUBZone, small disadvantaged business, and women-owned small business concern subcontractors and vendors.

c. Records on all subcontract solicitations, on a contract-by-contract basis, indicating (1) whether small business concerns were solicited, and if not, why not; (2) whether veteran-owned small business concerns were solicited, and if not, why not; (3) HUBZone small business concerns were solicited, and if not, why not; (4) whether small disadvantaged business concerns were solicited, and if not, why not; (5) whether women-owned small business concerns were solicited, and if not, why not; and (6) reasons for the failure of solicited small, veteran-owned, HUBZone, small disadvantaged, or women-owned small business concerns to receive a subcontract award.

d. Records of all subcontract award data, to include subcontractor's name and address, to be kept on a contract-by-contract basis.

e. Minutes of internal motivational and training meetings held for the guidance and encouragement of purchasing personnel, and records of all monitoring activities performed for compliance evaluation.

f. Copies of SF 294 and SF 295 showing date and place of filing and copies of all other reports or results of reviews conducted by the contracting agency or other interested agencies of the Federal government to monitor our compliance with this Subcontracting Plan.

In closing KERRY ENTERPRISES states that it will be the policy of KERRY ENTERPRISES to afford every practicable opportunity for small business, veteran-owned, HUBZone, small disadvantaged business, and women-owned small business to participate in construction contracts awarded to KERRY ENTERPRISES by the Federal Government to ensure that equitable opportunity is provided to small, veteran-owned, HUBZone, small disadvantaged, and women-owned small business concerns to compete for award of subcontracts and purchase orders, and to diligently pursue the achievement

of our goals of participation by small business, veteran-owned, HUBZone, small disadvantaged business, and women-owned small business in the dollars available for subcontract/purchase order award under the solicitation.

BY_____ DATE _____

_____
Signature

_____
Title, and Company Name

_____ DATE _____
Contract Specialist

Approval Recommended

_____ DATE _____
SADBU

Approve/Disapprove

_____ DATE _____
Contracting Officer

Approve/Disapprove

_____ DATE _____
Procurement Center Representative
Small Business Administration

WEEKLY TEMPORARY ELECTRICAL INSPECTION

Week ending _____

Contract No. _____

Contract Description _____

The following items were inspected in accordance with requirements in National Electrical Code and Corps of Engineers Safety and Health Requirements Manual, EM 385-1-1.

1. Wire (size, type, condition).

2. Systems and devices (polarity, continuity of ground, resistance to ground).

3. Resistance of ground rods (25 OHMS) measured and recorded.

4. Check GFI for 15/20 amp 120 volt circuits.

5. Plugs and receptacles (type, NEMA rating).

6. Circuit breakers and disconnect (size, type, weatherproof).

7. Extension cords (type, UL listed, insulation condition, splices, location).

8. Open wiring on insulators, nonmetallic sheathed cable, outside clearance (600 volts or less), Festoon lighting (as applicable).

_____

Signature Electrician/Electrical Engineer

MINIMUM STANDARD FOR TEMPORARY ELECTRICAL SERVICE

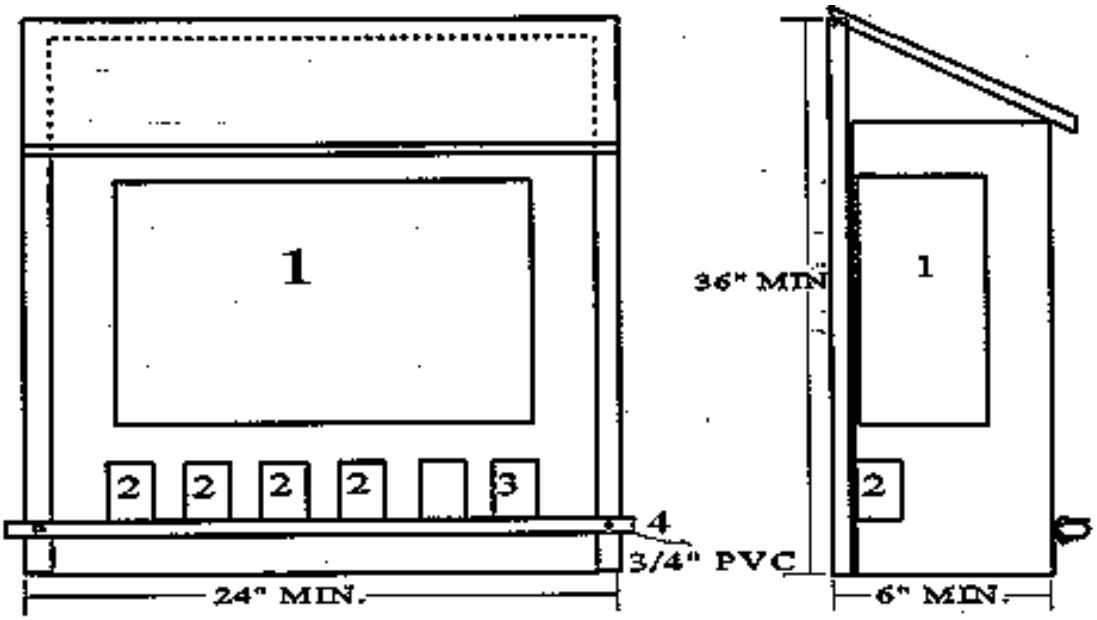

(DIMENSIONS ARE APPROXIMATE)

A. General construction of the enclosure for temporary service shall consist of not less than ½ inch plywood of exterior grade.

B. Numbers above correspond to the item below:

Item 1 - NEMA 3R circuit breaker type panelboard. This panelboard shall consist of 1 two-pole 60 amp main circuit breaker, 4* one pole 20 AMP branch circuit breakers, and 1* two pole 20 AMP branch circuit breaker. Breakers shall meet Federal Specifications Standards for Class 1A breakers and shall be plug-in type. (*Number of breakers to be adjusted to suit the job requirements.) Any of the above breakers which feed 15 and 20 AMP 110 volt receptacles shall be ground fault interrupter type.

Item 2 - Duplex grounding type convenience outlets in standard utility type outlet boxes with covers, meeting the NEC and NEMA requirements for wet locations. Connections to the branch circuit breakers shall be grounded by two conductors #12 NMC cable.

Item 3 - A single 3 conductor grounding type outlet rated for 250 volt service. Connections from this outlet to the two pole breaker shall be by two conductor grounded type NMC cable.

Item 4 - 3/4 inch PVC. This shall be used to support extension cords.

C. The panelboard shall be grounded by #6 copper wire connected to a 3/4 inch by 10 foot long ground rod.

D. Service to the panel shall consist of three copper conductor #6 minimum service entrance cable. This cable may enter the top or side of the panelboard.

E. Periodic inspections of systems and devices will be made by the Contractor at intervals not to exceed 1 week, and a report will be submitted indicating the results.

F. Ground fault circuit interrupters, approved for the protection of personnel, will be mandatory on all 15 and 20 ampere receptacle outlets on 120 volt single phase circuits for construction sites. This requirement includes not only temporary wiring installed by the Contractor but also any part of permanent wiring of the building or structure utilitized by the Contractor under this contract. This shall include any and all generators equipped with 15 or 20 AMP 110 volt receptacles.

G. Per EM 385-1-1 all temporary power distribution systems shall be submitted to the field office before installation.

ACTIVITY HAZARD ANALYSIS

1. Phase of Construction		
2. Location	3. Contract No.	4. Project
5. Prime Contractor	6. Date of Preparatory	7. Estimated Start Date
Potential Safety Hazard	Procedure to Control Hazard	
8. Contractor's Representative (signature)	9.	

SAS Form 9
1 Jan 82

SAFETY CHECKLIST FOR CRAWLER, TRUCK & WHEEL MOUNTED CRANES

Contract # and title:	
Equipment name & number: owned or leased?	
Contractor:	Subcontractor:
Contract Inspector:	Date inspected:

	Yes	No	N/A
1. Unless the manufacture has specified an on-rubber rating, outriggers will be fully extended and down? (16.D.10)			
2. Are lattice boom cranes equipped with a boom angle indicator, load indicating device, or a load moment indicator? (16.D.01)			
3. Are lattice boom and hydraulic cranes equipped with a means for the operator to visually determine levelness? (16.D.02)			
4. Are lattice boom and hydraulic cranes, except articulating booms cranes, equipped with drum rotation indicators located for use for the operator? (16.D.03)			
5. Are lattice boom and hydraulic mobile cranes equipped with a boom angle or radius indicator within the operator’s view? (16.D.04)			
6. Are lattice boom cranes, with exception of duty cycle cranes, equipped with an anti-two blocking device? (16.D.05)			
7. When duty cycle machines are required to make a non-duty lift, is the crane equipped with an international orange warning device and is a signal person present? (16.D 05)			
8. Are the following with the crane at all times: (16.C.02) a. the manufacturer’s operating manual? b. the load rating chart? c. the crane’s log book documenting use, maintenance, inspections and tests? d. operating manual for crane operator aids used on the crane.			

	Yes	No	N/A
9. Are the following on the project site: a. completed periodic inspection report prior to initial work? (16.C.12) b. pre-operational checklist used for daily inspection? (16.C.12) c. written reports of the operational performance test? (16.C.13) d. written reports of the load performance test? (16.C.13)			
10. Are all operators physically qualified to perform work? (16.C.05)			
11. Are all operators qualified by written and practical exam or by appropriate licensing agency for the type crane they are to operate? (16.C.05)			
12. Is the crane designed and constructed IAW the standards listed in Table 16-1? (16.C.06)			
13. Is a hazard analysis for set-up and set-down available? (16.C.08)			
14. Are accessible areas within the swing radius of the rear of the crane barricaded? (16.C.09)			
15. Are there at least 3 wraps of cable on the drum? (16.C.10)			
16. Are the hoisting ropes installed IAW the manufacturer’s recommendations? (16.C.10)			
17. Are critical lift plans available? (16.C.18)			
18. Are minimum clearance distance for high voltage lines posted at the operator’s position? (11.E.04)			
19. Do older lattice boom cranes with anti-two block warning devices in lieu of anti-two block prevention devices have a written exemption? (16.D.05)			
20. Is the slow moving emblem used on all vehicles which by design move at 25 MPH or less on public roads? (08.A.04)			
21. Are all vehicles which will be parked or moving slower than normal traffic on haul roads equipped with a yellow flashing light or flasher visible from all directions? (16.A.13)			

	Yes	No	N/A
22. Is all equipment to be operated on public roads provided with: (16A.07) a. headlights? b. brake lights? c. taillights? d. back-up lights? e. front and rear turn signals?			
23. Are seat and seat belts provided for the operator and each rider on equipment? (16.A.07 and 16.B.08)			
24. Is all equipment with windshields equipped with powered wipers and defogging or defrosting devices? (16.A.07)			
25. Is the glass in the windshield or other windows clear and unbroken to provide adequate protection and visiblity for the operator? (16.A.07, 16.B.10)			
26. Is all equipment equipped with adequate service brake system and emergency brake system? (16.A.18)			
27. Are areas on equipment where employees walk or climb equipped with platforms, footwalks, steps, handholds, guardrails, toeboards and non-slip surfaces? (16.B.03)			
28. Is all self propelled equipment equipped with automatic, audible, reverse signal alarms? (16.B.01)			
29. Is there a record of manufacturer’s approval of any modification of equipment which affects its capacity or safe operation? (16.A.18)			
30. Are truck and crawler cranes attached to a barge or pontoon by a slack tiedown system? (16.F.06)			
31. Have the following conditions been met for land cranes mounted on barges or pontoons: (16.F.04) a. Have load ratings been modified to reflect the increased loading from list, trim, wave, and wind action? b. Are all deck surfaces above the water? c. Is the entire bottom area of the barge or pontoon submerged? d. Are tie downs available? e. Are cranes blocked and secured?			
32. Are all belts, gears, shafts, spindles, drums, flywheels, or other rotating parts of equipment guarded where is a potential for exposure to workers? (16.B.03)			

	Yes	No	N/A
33. Is the area where the crane is to work level, firm and secured? (16.A.10)			
34. Is a dry chemical or carbon dioxide fire extinguisher rated at least 5-B:C on the crane? (16.A.26)			
35. Are trucks, for truck mounted cranes, equipped with a working reverse signal alarm? (16.B.01)			
36. Is a signal person provided where there is danger from swinging loads, buckets, booms, etc.? (16.B.13)			
37. Is there adequate clearance from overhead structures and electrical sources for the crane to be operated safely? (16.C.09)			
38. Is there adequate lighting for night operations? (16.C.19)			
39. Has the the boom stop test on cable-supported booms been performed? (16.D.06)			
40. Is the boom disenaging device functioning as required? (16.D.06)			
41. Has all rigging and wire rope been inspected? (Section 15)			
Remarks:(Enter actions taken for all “no” answers.)			
Contractor inspector signature			
Contractor QC/safety officer/project manager signature			

SAFETY CHECKLIST FOR PORTAL, TOWER, AND PILLAR CRANES

Contract # and Title:			
Equipment name & number: owned or leased?			
Contractor:	Subcontractor:		
Contract Inspector:	Date Inspected:		
	Yes	No	N/A
1. Are the following available: (16.E.02) a. written erection instructions? b. listing of the weight of each component? c. an activity hazard analysis for the erection? d. does the activity hazard analysis contain (1.) location of crane and adjacent structures? (2.) foundation design and construction requirements? (3.) clearance and bracing requirements?			
2. Is there a boom angle indicator within the operator's view? (16.E.04)			
3. Are luffing jib cranes equipped with: (16.E.05) a. shock absorbing jib stops? b. jib hoist limit switch? c. jib angle indicator visible to operator?			
4. If used, do rail clamps have slack between the point of attachment to the rail and the end fastened to the crane? (16E.06)			
5. Are the following with the crane at all times: (16.C.02) a. the manufacturer's operating manual? b. the load rating chart? c. the crane's log book documenting use, maintenance, inspections and tests? d. the operating manual for crane operational aids used on the crane?			

	Yes	No	N/A
6. Are the following on the project site: a. completed periodic inspection report prior to initial work? (16.C.12) b. pre-operational checklist used for daily inspections? (16.C.12) c. written reports of the operational performance tests? (16.C.13) d. written reports of the load performance tests? (16.C.13)			
7. Is every crane operator certified by a physician to be physically qualified to perform work? (16.C.05)			
8. Are all operators qualified by written and practical exam or by appropriate licensing agency for the type crane they are to operate? (16.C.05)			
9. Is the crane designed and constructed IAW the standards listed in Table 16-1? (16.C.05)			
10. Is a hazard analysis for set-up and set-down available? (16.C.08)			
11. Are there at least 3 wraps of cable on the drum? (16.C.10)			
12. Are the hoisting ropes installed IAW the manufacturer’s recommendations? (16.C.10)			
13. Is the a record of manufacturer’s approval of any modification of equipment which affects its capacity or safe operation? (16.A.07)			
5. Remarks: (Enter actions taken)			
Contractor inspector signature			
Contractor QC/safety officer/project manager signature			

SAFETY CHECKLIST FOR RIGGING

Contract # and title:			
Equipment name & number: owned or leased?			
Contractor	Subcontractor:		
Contractor inspector:	Date inspected:		
	Yes	No	N/A
1. Has all defective rigging been removed? (15.A.01)			
2. Is rigging stored properly? (15.A.01)			
3. Are running lines within 6.5’ of the ground or working level guarded? (15.A.03)			
4. Are all eye splices made in an approved manner with rope thimbles? (sling eyes excepted) (15.A.04)			
5. Are positive latching devices used to secure loads? (15.A.05)			
6. Are all custom lifting accessories marked to indicate their safe working loads? (15A.07)			
7. Are all custom designed lifting accessories proof-tested to 125% of their rated load? (15.A.07)			
8. Are the following conditions met for wire rope: (15.B.01-09) a. Are they free of rust or broken wires? b. Are defective ropes cut up or marked as unusable? c. Do rope clips attached with U-bolts have the U-bolts on the dead end or short end of the rope? d. Are protruding ends of strands in splices on slings and bridles covered or blunted? e. Except for eye splices in the end of wires and for all endless wire rope slings, are all wire ropes used in hoisting, lowering, or pulling loads one continuous piece, free of knots or splices?			

	Yes	No	N/A
f. Do all eye splices have at least 5 full tucks? g. If used, are wedge sockets fastening attached without attached the dead end of the wire rope to the live rope? h. Are they free of eyes or splices formed by wire rope clips or knots?			
9. Are the following conditions met for chain? (15.C.01-04) a. Are all chains alloyed? b. Do all coupling links or other attachments have rated capacities at least equal to that of the chain. c. Are makeshift fasteners restricted from use?			
10. Are the following conditions met for fiber rope:(15.D.01-07) a. Are all ropes protected from freezing, excessive heat or corrosive materials? b. Are all ropes protected from abrasion? c. Are splices made IAW manufacture's recommendations? d. Do all eye splices in manila rope contain at least 3 full tucks and do all short splices contain at least 6 full tucks(3 on each side of the centerline of the splice)? e. Do all splices in layed synthetic fiber rope contain at least 4 full tucks and do short splices contain at least 8 full tucks (4 on each side of the centerline of the splice)? f. Do the tails of fiber rope splices extend at least 6 rope diameters (for rope 1" diameter or greater) past the last full tuck? g. Are all eye splices large enough to provide an included angle of not greater than 60* at the splice when the eye is placed over the load or support?			
11. Are the following conditions met for all slings:(15.E.01-06) a. Is protection provided between the sling and sharp surfaces? b. Do all rope slings have minimum clear length of 40 times the diameter of component ropes between each end fitting or eye splice? c. Do all braided slings have a minimum clear length of 40 times the diameter of component ropes between each end fitting or eye splice?			

	Yes	No	N/A
d. Do all welded alloy steel chain slings have affixed permanent identification stating size, grade, rated capacity and manufacturer? e. Is each synthetic web sling marked or coded to identify its manufacturer, rated capacities for each type hitch and the type material?			
12. Are drums, sheaves, and pulley smooth and free of surface defects? (15.F.01)			
13. Is the ratio of the diameter of the rigging and the drum, block sheave or pulley thread diameter such that the rigging will adjust without excessive wear, deformation, or damage? (15F.02)			
14. Have all damaged drums, sheaves and pulleys been removed from service? (15.F.04)			
15. Are all connections, fittings, fastenings, and attachments of good quality, proper size and strength, and installed IAW manufacturer's recommendations? (15.F.05)			
16. Are all shackles and hooks sized properly? (15.F.06 & .07)			
17. Are hoisting hooks rated at 10 tons or greater provided with safe handling means? (15.F.07)			
18. Do all drums have sufficient rope capacity? (15.F.08)			
19. Is the drum end of the rope anchored by a clamp securely attached to the drum in a manner approved by the manufacturer? (15.F.08)			
20. Do grooved drums have the correct groove pitch for the diameter of the rope and is the groove depth correct? (15.F.08)			
21. Do the flanges on grooved drums project beyond the last layer of rope at a distance of either 2″ or twice the diameter of the rope, whichever is greater? (15.F.08)			
22. Do the flanges on ungrooved drums project beyond the last layer of rope a distance of either 2.5″ or twice the diameter of the rope, which ever is greater.			

	Yes	No	N/A
23. Are the sheaves compatible with the size of rope used and as specified by the manufacture? (15F.09)			
24. Are sheaves properly aligned, lubricated, and in good condition? (15.F.09)			
25. When rope is subject to riding or jumping off a sheave, are sheaves equipped with cablekeepers? 915.F.09)			
26. Are eye bolts loaded in the plane of the eye and at angles less than 45* to the horizontal? (15.F.10)			
27. Remarks: (Enter actions taken for “no” answers.)			
Contractor inspector signature			
Contractor QC/safety/project manager signature			

SAFETY CHECKLIST FOR MOTOR VEHICLES , TRAILERS AND TRUCKS

Contract # and title: owned or leased?	
Equipment name & number:	
Contractor:	Subcontractor:
Contractor inspector:	Date inspected:

	Yes	No	N/A
1. Are records of safety inspections of all vehicles available? (18.A.02)			
2. Are all vehicles to be operated between sunset and sunrise equipped with: (18.A.04) a. 2 headlights? b. taillights and brake lights? c. front and back turn signals? d. 3 emergency flares, reflective markers, or equivalent portable warning devices?			
3. Are vehicles, except trailers or semi-trailers having a gross weight of 5000 lbs or less, equipped with service brakes and manually operated parking brakes? (18.A.05)			
4. Are service brakes on trailers and semitrailers controlled from the driver’s seat of the prime mover? (18A.06)			
5. Does the vehicle have: (18.A.06) a. a speedometer? b. a fuel gage? c. an audible warning device (horn)? d. a windshield & adequate windshield wiper? e. an operable defroster and defogging device? f. an adequate rearview mirror? g. a cab, cab shield, and other protection to protect the driver from the elements and falling or shifting materials? h. non-slip surfaces on steps? I. a power-operated starting device?			

	Yes	No	N/A
6. Is all the glass safety glass and is all broken or cracked glass replace? (18.A.07)			
7. Do trailers meet the following: (18A.08) a. Are all towing devices adequate for the weight drawn? b. Are all towing devices properly mounted? c. Are locking devices or a double safety system provided on every 5th wheel mechanism and tow bar arrangement to prevent accidental separation? d. Are trailers coupled with safety chains or cables to the towing vehicle? e. Are trailers equipped with the power brakes equipped with a break-away device which will lock-up the brakes in the event the trailer separates from the towing vehicle?			
8. Are all dump trucks:(18.A.10) a. equipped with a holding device to prevent accidental lowering of the body? b. equipped with a hoist lever secured to prevent accidental starting or tipping? c. equipped with means to determine (from the operator’s position) if the dump box is lowered? d. equipped with trip handles for tailgates that allow the operator to be clear?			
9. Are all buses, trucks and combination of vehicles with a carrying capacity of 1.5 tons or more, to be operated on public roads equipped with: (18.A.11) a. 3 reflective markers? b. 2 wheel chocks for each vehicle? c. at least one 2A:10B:C fire extinguisher? d. at least two properly rated fire extinguishers (for vehicles carrying flammable cargo)? e. a red flag not less than 1 foot square.			
10. Is vehicle exhaust controlled so as not to present a hazard to personnel? (18.A.13)			
11. Are all rubber tired motor vehicles equipped with fenders or with mud flaps if the vehicle is not designed for fenders? (18.A.14)			

	Yes	No	N/A
12. Are all vehicles, except buses, equipped with seat belts? (18.B.02)			
13. Does all self-propelled construction and industrial equipment have a working reverse signal alarm? (16.B.01)			
14. Are all hot surfaces of equipment, including exhaust pipes or other lines, guarded or insulated to prevent injury or fire? (16.B.03)			
15. If an off the road vehicle, is it equipped with rollover protective structures? (16.B.12)			
16. Remarks: (Enter actions taken for “no” answers)			
Contractor inspector signature			
Contractor QC/safety officer/project manager signature			

SAFETY CHECKLIST FOR CRAWLER TRACTORS AND DOZERS

Contract # and title:	
Equipment name & number: owned or leased?	
Contractor:	Subcontractor:
Contractor inspector:	Date inspected:

	Yes	No	N/A
1. Are initial and daily/shift inspection records available? (16.A.01& .02)			
2. Are only qualified operators assigned to operate mechanized equipment? (16.A.04)			
3. Are sufficient lights provided for night operations? (16.A.11)			
4. Is the unit shut down before refueling? (16.A.14)			
5. Does the unit have as a minimum a 5-B:C fire extinguisher? (16.A.26)			
6. Is there an effective, working reverse alarm? (16.B.01)			
7. Are moving parts, shafts, sprockets, belts, etc., guarded? (16.B.03 ,07, and 13)			
8. Is protections against hot surfaces, exhausts, etc., provided? (16.B.03 and .13)			
9. Are fuel tanks located in a manner to prevent spills or overflows from running onto engine exhaust or electrical equipment?			

	Yes	No	N/A
10. Are exhaust discharges directed so they do not endanger person of obstruct operator vision?(16.B.05)			
11. Are seat belts provided? (16B.08)			
12. Is protection (grills, canopies, screens) provided to shield operator from falling or flying objects? (16.B.10 and .11)			
13. Is roll over protection provided? (16.B.12)			
14. Remarks: (Enter actions taken for “no” answers)			
Contractor inspector signature			
Contractor QC/safety officer/project manager signature			

SAFETY CHECKLIST FOR SCRAPERS, MOTOR GRADERS , AND OTHER MOBILE EQUIPMENT

Contract # and title:	
Equipment name and number: owned or leased?	
Contractor:	Subcontractor:
Contractor inspector:	Date inspected:

	Yes	No	N/A
1. Are initial and daily/shift inspection records available? (16.A.01 & .02)			
2. Are only qualified operators assigned to operate equipment? (16.A.04)			
3. Are sufficient lights provided for night operations? (16.A.11)			
4. Does the unit have as a minimum a 5-B:C fire extinguisher? (16.A.26)			
5. Is there an effective working reverse alarm? (16.B.01)			
6. Is the unit shut down for refueling? (16.A.14)			
7. Are moving parts, shafts, sprockets, belts, etc., guarded? (16.B.03, .07 and .13)			
8. Is protection against hot surfaces, exhausts, etc., provided? (16.B.03 and .13)			
9. Are fuel tanks located in a manner to prevent spills or overflow from running onto engine exhaust or electrical equipment? (16.B.04)			
10. Are exhaust discharges directed so they do not endanger persons or obstruct operator vision? (16.B.05)			

	Yes	No	N/A
11. Are seat belts provided for each person required to ride on the equipment? (16.B.08)			
12. Is protection (grills, canopies, screens) provided to shield operators from falling or flying objects? (16.B.10 and .11)			
13. Is roll over protection provided? (16.B.12)			
14. Is a safe means of access to the cab provided (steps, grab bars, non-slip surfaces)? (16.B.03)_			
15. Are adequate head and tail lights provided? (16.A.07)			
16. Have brakes been tested and found satisfactory? (16.A.07)			
17. Does the unit have an emergency brake which will automatically stop the equipment upon brake failure? Is this system manually operable from the drivers position? (16.A.07)			
18. Is all equipment with windshields equipped with powered wipers and defogging or defrosting system? (16.A.07)			
19. Are all vehicles which will be parked or moving slower than normal traffic on haul roads equipped with a yellow flashing light or flasher visible from all directions? (16.A.13)			
20. Is the slow moving emblem used on all vehicles which by design move at 25 MPH or less on public roads? (08A.04)			

	Yes	No	N/A
21. Have air tanks been tested and certified? (20.A.01)			
22. Is an air pressure gage in working condition installed on the unit? (20.A.12)			
23. Does the air tank have an accessible drain valve? (20.B.17)			
24. Remarks: (Enter action taken for all “no” answers)			
Contractor inspector signature			
Contractor QC/safety officer/project manager			

SAFETY CHECKLIST FOR MATERIAL HOISTS

Contract # and title:	
Equipment name & number:	
Contractor:	Subcontractor:
Contract Inspector:	Date inspected:

	Yes	No	N/A
1. Are all hoist towers, masts, guys or braces, counterweights, drive machinery supports, sheave supports, platforms, supporting structures, and accessories designed by a licensed engineer? (16.K.02)			
2. Is a copy of the hoist operating manual available? (16.K.04)			
3. Do all floors and platforms have slip-resistant surfaces? (16.K.08)			
4. Are landings and runways adequately barricaded and is overhead protection provided where needed? (16.K.08)			
5. Are hoisting ropes installed IAW manufacturer's instructions? (16.K.10)			
6. Are operating rules posted at the hoist operator's station? (16.K.14)			
7. Are air powered hoists connected to an air supply of sufficient capacity and pressure to safely operate the hoist? (16.K.15)			
8. Are pneumatic hoses secured by some positive means to prevent accidental disconnection? (16.K.15)			
9. Remarks: (Enter actions taken for all "no" answers.)			
Contractor inspector signature			
Contractor QC/safety officer/project manager signature			

SAD Form 1666g-R Mar 97 Previous editions may be used for contracts referencing the 1992 edition of EM 385-1-1.

SAFETY CHECKLIST FOR EARTH DRILLING EQUIPMENT

Contract # and title:	
Equipment name & number:	
Contractor:	Subcontractor:
Contractor inspector:	Date inspected:

	Yes	No	N/A
1. Is a copy of the manual for all drilling equipment available? (16.M.01)			
2. Have all overhead electrical hazards and potential ground hazards been identified in a site layout plan and addressed in an activity hazard analysis? (16.M.02)			
3. Are MSDSs for all drilling fluids available? (16.M.05)			
4. Does the drilling equipment have 2 easily accessible emergency shut down devices (one for the operator and one for the helper)? (16.M.06)			
5. Is the equipment posted with a warning of electrical hazards? (16.M.06)			
6. Is there a spotter or an electrical proximity warning device available to ensure safe distances from power lines are maintained? (16.M.06)			
7. Remarks: (Enter actions taken for “no” answers)			
Contractor inspector signature			
Contractor QC/safety officer/project manager			

SAD Form 1666h-R Mar 97 Previous editions may be used for contracts referencing the 1992 edition of EM 385-1-1.

TRANSMITTAL OF SHOP DRAWINGS, EQUIPMENT DATA, MATERIAL SAMPLES, OR MANUFACTURER'S CERTIFICATES OF COMPLIANCE *(Read instructions on the reverse side prior to initiating this form)*	DATE	TRANSMITTAL NO.

SECTION I - REQUEST FOR APPROVAL OF THE FOLLOWING ITEMS *(This section will be initiated by the contractor)*

TO:	FROM:	CONTRACT NO.	CHECK ONE: ☐ THIS IS A NEW TRANSMITTAL ☐ THIS IS A RESUBMITTAL OF TRANSMITTAL _____
SPECIFICATION SEC. NO. *(Cover only one section with each transmittal)*	PROJECT TITLE AND LOCATION		CHECK ONE: THIS TRANSMITTAL IS FOR ☐ FIO ☐ GOV'T. APPROVAL

ITEM NO. *a.*	DESCRIPTION OF ITEM SUBMITTED *(Type size, model number/etc.)* *b.*	MFG OR CONTR. CAT., CURVE DRAWING OR BROCHURE NO. *(See instruction no. 8)* *c.*	NO. OF COPIES *d.*	CONTRACT REFERENCE DOCUMENT		FOR CONTRACTOR USE CODE *g.*	VARIATION *(See instruction No. 6)* *h.*	FOR CE USE CODE *i.*
				SPEC. PARA. NO. *e.*	DRAWING SHEET NO. *f.*			

REMARKS	I certify that the above submitted items have been reviewed in detail and are correct and in strict conformance with the contract drawings and specifications except as other wise stated. NAME AND SIGNATURE OF CONTRACTOR

SECTION II - APPROVAL ACTION

ENCLOSURES RETURNED *(List by Item No.)*	NAME, TITLE AND SIGNATURE OF APPROVING AUTHORITY	DATE

INSTRUCTIONS

1. Section I will be initiated by the Contractor in the required number of copies.

2. Each transmittal shall be numbered consecutively in the space provided for "Transmittal No.". This number, in addition to the contract number, will form a serial number for identifying each submittal. For new submittals or resubmittals mark the appropriate box; on resubmittals, insert transmittal number of last submission as well as the new submittal number.

3. The "Item No." will be the same "Item No." as indicated on ENG FORM 4288-R for each entry on this form.

4. Submittals requiring expeditious handling will be submitted on a separate form.

5. Separate transmittal form will be used for submittals under separate sections of the specifications.

6. A check shall be placed in the "Variation" column when a submittal is not in accordance with the plans and specifications--also, a written statement to that effect shall be included in the space provided for "Remarks".

7. Form is self-transmittal, letter of transmittal is not required.

8. When a sample of material or Manufacturer's Certificate of Compliance is transmitted, indicate "Sample" or "Certificate" in column c, Section I.

9. U.S. Army Corps of Engineers approving authority will assign action codes as indicated below in space provided in Section I, column i to each item submitted. In addition they will ensure enclosures are indicated and attached to the form prior to return to the contractor. The Contractor will assign action codes as indicated below in Section I, column g, to each item submitted.

THE FOLLOWING ACTION CODES ARE GIVEN TO ITEMS SUBMITTED

A -- Approved as submitted.

B -- Approved, except as noted on drawings.

C -- Approved, except as noted on drawings.
Refer to attached sheet resubmission required.

D -- Will be returned by separate correspondence.

E -- Disapproved (See attached).

F -- Receipt acknowledged.

FX -- Receipt acknowledged, does not comply as noted with contract requirements.

G -- Other *(Specify)*

10. Approval of items does not relieve the contractor from complying with all the requirements of the contract plans and specifications.

(Reverse of ENG Form 4025-R)

COST ESTIMATE ANALYSIS

For use of this form, see TM 5-800-2; the proponent agency is USACE.

PROJECT	INVITATION/CONTRACTOR	EFFECTIVE PRICING DATE	DATE PREPARED
LOCATION	CODE (Check one) ☐ A ☐ B ☐ C ☐ OTHER	DRAWING NO.	SHEET OF SHEETS
		ESTIMATOR	CHECKED BY

TASK DESCRIPTION	QUANTITY		LABOR				EQUIPMENT		MATERIAL		TOTAL	SHIPPING	
	NO. OF UNITS	UNIT MEAS	MH UNIT	TOTAL HRS	UNIT PRICE	COST	UNIT PRICE	COST	UNIT PRICE	COST		UNIT WT	TOTAL WT
TOTAL THIS SHEET													

DA FORM 5418-R, Apr 85

Approved by OM 0348-0046

DISCLOSURE OF LOBBYING ACTIVITIES

Complete this form to disclose lobbying activities pursuant to 31 U.S.C. 1352
(See reverse for public burden disclosure.)

1. Type of Federal Action:

☐ a. contract
b. grant
c. cooperative agreement
d. loan
e. loan guarantee
f. loan insurance

2. Status of Federal Action:

☐ a. bid/offer/application
b. initial award
c. post-award

3. Report Type:

☐ a. initial filing
b. material change

For Material Change Only:
year _____ quarter _____
date of last report _____

4. Name and Address of Reporting Entity:

☐ Prime ☐ Subawardee
Tier _____, *if known*:

Congressional District, *if known:*

5. If Reporting Entity in No. 4 is Subawardee, Enter Name and Address of Prime:

Congressional District, *if known*:

6. Federal Department/Agency:

7. Federal Program Name/Description:

CFDA Number, *if applicable*: _____

8. Federal Action Number, *if known*:

9. Award Amount, *if known*:

$

10. a. Name and Address of Lobbying Entity
(*if individual, last name, first name, MI):*

b. Individuals Performing Services *(including address if different from No. 10a)*
(last name, first name, MI):

(attach Continuation Sheet(s) SF-LLL-A, *if necessary*)

11. Amount of Payment *(check all that apply)*:

$ _____ ☐ actual ☐ planned

12. Form of Payment *(check all that apply)*:

☐ a. cash
☐ b. in-kind; specify: nature _____
value _____

13. Type of Payment *(check all that apply)*:

☐ a. retainer
☐ b. one-time fee
☐ c. commission
☐ d. contingent fee
☐ e. deferred
☐ f. other; specify: _____

14. Brief Description of Services Performed or to be Performed and Date(s) of Service, including officer(s), employee(s), or Member(s) contacted, for Payment indicated in Item 11:

(attach Continuation Sheet(s) SF-LLL-A, *if necessary*)

15. Continuation Sheet(s) SF-LLL-A attached: ☐ Yes ☐ No

16. Information requested through this form is authorized by title 31 U.S.C section 1352. This disclosure of lobbyig activities is a materia representation of fact upon which reliance was placed by the tier above when this transaction was made or entered into. This disclosure is required pursuant to 31 U.S.C. 1352 . This information will be reported to the Congress semi-annually and will be available for public inspection. Any person who fails to

Signature: _____

Print Name: _____

Title: _____

Telephone No.: _____ **Date:** _____

Federal Use Only:

Authorized for Local Reproduction

INSTRUCTIONS FOR COMPLETION OF SF-LLL, DISCLOSURE OF LOBBYING ACTIVITIES

This disclosure form shall be completed by the reporting entity, whether subawardee or prime Federal recipient, at the initiation or receipt of a covered Federal action, or a material change to a previous filing, pursuant to title 31 U.S.C. section 1352. The filing of a form is required for each payment or agreement to make payment to any lobbying entity for influencing or attempting to influence an officer or employee of any agency, a Member of Congress, an officer or employee of Congress, or an employee of a member of Congress in connection with a covered Federal action. Use the SF-LLL-A Continuation Sheet for additional information if the space on the form is inadequate. Complete all items that apply for both the initial filing and material change report. Refer to the implementing guidance published by the Office of Management and Budget for additional information.

1. Identify the type of covered Federal action for which lobbying activity is and/or has been secured to influence the outcome of a covered Federal action.

2. Identify the status of the covered Federal action.

3. Identify the appropriate classification of this report. If this is a followup report caused by a material change to the information previously reported, enter the year and quarter in which the change occurred. Enter the date of the last previously submitted report by this reporting entity for this covered Federal action.

4. Enter the full name, address, city, state and zip code of the reporting entity. Include Congressional District, if known. Check the appropriate classification of the reporting entity that designates if it is, or expects to be, a prime or subaward recipient. Identify the tier of the subawardee, e.g., the first subawardee of the prime is the 1st tier. Subawards include but are not limited to subcontracts, subgrants and contract awards under grants.

5. If the organization filing the report in item 4 checks “Subawardee”, then enter the full name, address, city, state and zip code of the prime Federal recipient. Include Congressional District, if known.

6. Enter the name of the Federal agency making the award or loan commitment. Include at least one organizational level below agency name, if known. For example, Department of Transportation, United States Coast Guard.

7. Enter the Federal program name or description for the covered Federal action (item 1). If known, enter the full Catalog of Federal Domestic Assistance (CFDA) number for grants, cooperative agreements, loans, and loan commitments.

8. Enter the most appropriate Federal identifying number available for the Federal action identified in item 1 (e.g., Request for Proposal (RFP) number; Invitation for Bid (IFB) number; grant announcement number; the contract, grant, or loan award number; the application/proposal control number assigned by the Federal agency). Include prefixes, e.g., “RFP-DE-90-001.”

9. For a covered Federal action where there has been an award or loan commitment by the Federal agency, enter the Federal amount of the award/loan commitment for the prime entity identified in item 4 or 5.

10. (a) Enter the full name, address, city, state and zip code of the lobbying entity engaged by the reporting entity identified in item 4 to influence the covered Federal action.

    (b) Enter the full names of the individuals(s) performing services, and include full address if different from 10 (a). Enter Last Name, First Name, and Middle Initial (MI).

11. Enter the amount of compensation paid or reasonably expected to be paid by the reporting entity (item 4) to the lobbying entity (item 10). Indicate whether the payment has been made (actual) or will be made (planned). Check all boxes that apply. If this is a material change report, enter the cumulative amount of payment made or planned to be made.

12. Check the appropriate box(es). Check all boxes that apply. If payment is made through an in-kind contribution, specify the nature and value of the in-kind payment.

13. Check the appropriate box(es). Check all boxes that apply. If other, specify nature.

    Provide a specific and detailed description of the services that the lobbyist has performed, or will be expected to perform, and the date(s) of any services rendered. Include all preparatory and related activity, not just time spent in

Public reporting burden for this collection of information is estimated to average 30 minutes per response, including time for reviewing instructions, searching existing data sources, gathering and maintaining the data needed, and completing and reviewing the collection of information. Send comments regarding the burden estimate or any other aspect of this collection of information, including suggestions for reducing this burden, to the Office of Management and Budget, Paperwork Reduction Project (0348-0046), Washington, D.C. 20503.

DISCLOSURE OF LOBBYING ACTIVITIES
CONTINUATION SHEET

Approved by OM
0348-0046

Reporting Entity: _____ Page ____ of ____ ____

*U.S. G.P.O. 1990-260-708:00012

REAL PROPERTY INVENTORY

ITEM	TALLY	TOTAL
COMMODES		
LAVATORIES		
URINALS		
EXHAUST FAN (9")		
EXHAUST FAN (OTHER)		
WATER COOLER		
HOTWATER HEATER		
MOP SINK		
AC PLANT	LS 5 TN. 5-25 TN. 25-100 TN. OVER 100 TN.	
AS (WINDOW TYPE)		
FIRE ALARM SYSTEM	MANUAL HALON SPRINKLER	
EMERGENCY LIGHTS		
UNIT HEATER		
STRIP HEATER		
COOLING TOWER		
WALK-IN COOLER		
AIR CURTAIN		
EYE WASH		
SHOWERS		
BOILER	GAS FIRED OIL FIRED STEAM	
FUEL TANK	UNDERGROUND OUTSIDE	

REAL PROPERTY INVENTORY

ITEM	TALLY	TOTAL
WASH BASIN		
AIR COMPRESSOR		
HOISTS		
INVENTORY BY:		DATA:
RECONCILED BY:		DATA:

REAL PROPERTY INVENTORY

ITEM	TALLY	TOTAL
INVENTORIED BY:		DATE:
RECONCILED BY:		DATE:

OPERATIONS, STORAGE AND MAINTENANCE FACILITY

CONTRACTOR PREPARED NETWORK ANALYSIS SYSTEM (NAS)—PROJECT SCHEDULE
(SAS Jan 01)

{For contracts less than $5 Million }

A. REFERENCES

The publications listed below form a part of the specification to the extent referenced. The publication is referenced in the text by basic designation only.

ER 1-1-11 Progress, Schedules, and Network Analysis Systems (June 1995)

FAR 52.236-15 Schedules for Construction Contracts

B. CONTRACTOR SCHEDULING REPRESENTATIVE

Deleted

C. GENERAL REQUIREMENTS

Pursuant to the Contract Clause, SCHEDULES FOR CONSTRUCTION CONTRACTS, FAR 52.236-15, the contractor shall prepare the NAS Project Schedule as described below. The scheduling of construction shall be the responsibility of the Contractor. Contractor management and Superintendent personnel shall actively participate in its development. Subcontractors and suppliers working on the project shall actively participate in developing and maintaining an accurate NAS Project Schedule and the prime contractor shall verify their support for the submitted schedule in writing. The contractor shall include these verifications in the initial submittal and all revisions (to logic and durations) of the NAS schedule. The approved NAS Project Schedule shall be used by the contractor/subcontractors to plan and control the progress of the work, perform evaluations of actual progress, perform time analysis for requests of time extensions on changes, and to provide the basis for the request of all progress payments. The Government will use the NAS Project Schedule to evaluate the contractor’s progress for timely completion,

planning for Quality Assurance verification of the work and evaluating the affect of a proposed modification on the contract duration (critical path activities).

D. BASIS FOR PAYMENT

The schedule shall be the basis for progress payments. Lack of an approved schedule or scheduling personnel will result in an inability of the Contracting Officer to evaluate Contractor's progress for the purposes of payment. The Contractor shall provide all information/data, as specified below to allow the Contracting Officer to evaluate Contractor progress for payment purposes. In the case where Project Schedule revisions have been directed by the Contracting Officer and those revisions have not been included in the Project Schedule, the Contracting Officer may hold retainage up to the maximum allowed by contract, each payment period, until revisions to the Project Schedule have been made.

E. PROJECT SCHEDULE

E.1 Project schedule software

The contractor shall prepare the NAS schedule using a computer software system. The system utilized by the Contractor shall be capable of satisfying all requirements of this specification and ER 1-1-11. Failure of the Contractor to meet the requirements of this specification shall result in the disapproval of the schedule. Manual methods used to produce any required information shall require prior approval by the Contracting Officer. Should the contractor utilize software that is different than that utilized by the ACO, the contractor shall provide a copy of the software and a license to the ACO at the field office until final payment. The software and license shall be returned to the contractor. The Contractor shall submit a copy of the user's manual outlining the selected CPM computer program's mathematical analysis capabilities, details, functions and operation. The Contractor shall provide to the Government a complete input listing for the initial schedule.

E.2 Use of the Critical Path Method

The Critical Path Method (CPM) of network calculation shall be used to generate the Project Schedule. The Contractor shall provide the Project schedule in the Precedence Diagram Method (PDM).

E.2.1 Level of Detail Required

The Project Schedule shall include an appropriate level of detail as determined by the Contracting Officer. The contractor shall develop or update the Project Schedule or provide data to the Contracting officer at the appropriate level of detail, as specified by the Contracting Officer.

E.2.3 Procurement Activities

Tasks related to the procurement of long lead materials or equipment shall be included as separate activities in the project schedule. Long lead materials and equipment are those materials that have a procurement cycle of over 90 days. Examples of procurement process activities include, but are not limited to: submittals, approvals, procurement, fabrication, and delivery.

E.2.4 Government Activities

Government and other agency activities that could impact progress shall be shown. These activities include, but are not limited to: approvals, inspections, utility tie-in, Government Furnished Equipment (GFE) and Notice to Proceed (NTP) for phasing requirements.

E.2.5 Contracts with multiple buildings/facilities

The contractor shall prepare a separate detailed NAS schedule for each building/facility indicating the critical path for each building/facility with interim completion dates (as applicable). The master NAS schedule shall indicate the interface/lag/link between buildings/facilities to maximize the labor and other resources and the master critical path through various buildings/facilities for the entire contract duration.

E.3 <u>Project Nas Schedule Submissions</u>

The Contractor shall provide the submissions as described below. The data for each submission are as follows:

E.3.1 Preliminary NAS Project Schedule Submission

The Preliminary NAS Project Schedule, defining the Contractor's planned operations for the first 60 calendar days shall be submitted for approval AT THE PRECONSTRUCTION CONFERENCE after the NTP is acknowledged.

The approved preliminary schedule shall be used for payment purposes not to exceed 60 calendar days after NTP. The preliminary schedule shall be detailed for the first 60 days and depict the remainder of the project in summary format. The preliminary schedule shall be submitted with two data disks and two hard copies of all diagrams/summary diagram, reports/sorts, cash flow curves and narrative report.

E.3.2 Initial NAS Project Schedule Submission

The Initial NAS Project Schedule shall be submitted for approval within
{30} {*ACO must determine the proper calendar days* }
calendar days after NTP is acknowledged. The schedule shall include detailed activities for the entire project with a reasonable sequence of activities that represent work through the project and shall be at a reasonable level of detail as determined by the Contracting Officer. The initial schedule shall be submitted with ONE data disk and two hard copies of all diagrams/summary diagrams, reports/sorts, cash flow curves and narrative report.

E.3.3 Monthly Updates (entire NAS project schedule)

The Contractor shall submit monthly schedule updates. These submissions shall enable the Contracting Officer to assess Contractor's monthly progress. If the Contractor fails or refuses to furnish the information and project schedule data, which in the judgment of the Contracting Officer is necessary for verifying the Contractor's progress, the Contractor shall be deemed not to have provided a proper invoice upon which a progress payment may be made. The monthly updates shall include

{ONE *data disk* and *two hard copies of updates of all diagrams including summary diagram, reports/sorts, 90 day look ahead report (based on LS/LF dates), cash flow curves and narrative report}*.

{The actual # of diagrams, reports/sorts should be determined by ACO based on the need for the contract.}

The Contractor shall include its requests to revise/adjust the NAS system for approval prior to implementing the revisions.

E.3.4 Standard Activity Coding Dictionary

The Contractor shall use the activity coding structure defined in the Standard Data Exchange Format (SDEF) in ER 1-1-11, Appendix A. This exact structure is mandatory, even if some fields are not used.

E.3.5 SUBMISSION Requirements

E.3.5.1 DATA DISKS

One data disks containing the project schedule shall be provided. Data on the disks shall adhere to the SDEF format specified in ER 1-1-11, Appendix A.

E.3.5.2 File Medium

Required data shall be submitted on 3.5 disks, formatted to hold 1.44 MB of data, under the MS-DOS Version S. or 6.x, unless otherwise approved by the Contracting Officer. CD are allowable in lieu of disks.

E.3.5.3 Disk Label

A permanent exterior label shall be affixed to each disk submitted. The label shall indicate the type of schedule (Preliminary, Initial, Update, or Change), full contract number, project name, project location, data date, name and telephone number or person responsible for the schedule, and the MS-DOS version used to format the disk

E.3.5.4 File Name

Each file submitted shall have a name related to either the schedule data date, project name, or contract number. The Contractor shall develop a naming convention that will ensure that the names of the files submitted are unique. The Contractor shall submit the file naming convention to the Contracting Officer for approval. Provide the naming convention (limited to 4 characters): i.e. Filename(contract 99-47) = 47BL for Baseline and 4701 for 1st monthly.

E.4 <u>Network Logic Diagram</u>

E.4.1 The network diagram shall he required on the preliminary schedule, initial schedule submission, and updated on each monthly schedule submissions. Monthly updated diagrams must indicate actual progress as of the data date. The network diagram shall depict and display the order and interdependence of

activities and the sequence in which the work is to be accomplished.

E.4.2 Logic diagrams shall show the order and interdependence of project activities and the sequence in which the work is to be accomplished, as planned by the Contractor. The logic diagramming procedure which will be used will show how the start of a given activity is dependent on the completion of preceding activities, and how its completion restricts the start of following activities.

E.4.3 Activity Duration: In calculating activity durations, the effects of Saturdays, Sundays, holidays, and normal inclement weather as specified for each month shall be considered.

E.4.3.1 Contractor submissions shall include reasonable activity durations as determined by the contractor and subcontractors. Reasonable durations are those that allow the progress of activities to be accurately determined and monitored. The durations are to be determined by the contractor using the planned crew size/composition and productivity rate for the selected crew.

{The previous sentence requirement for resource loading may be deleted on small contracts, as determined by the ACO }

The activity duration may be indicated in "work" days, should the contractor plan to work less than 7 days/ week. The contractor may request to change the work days from 5 days/week to 6 or 7 days/week should this action become necessary to regain the schedule due to problems unrelated to the Government actions

E.4.4 The logic diagrams may be manually or machine drafted. If machine drafted, the quality and readability shall be as good as the manually drawn diagram. The quality and readability of the diagrams shall be acceptable to the Contracting Officer.

E.4.5 Continuous Flow

Diagrams shall show a continuous flow from left to right with no arrows from right to left. The activity number, description, duration, and estimated earned value shall be shown on the diagram.

E.4.6 Responsibility

All activities shall be identified in the project schedule by the party responsible to perform the work. Responsibility includes, but is not limited to, the subcontracting firm, contractor work force, or government agency performing a given task. Activities shall not belong to more than one responsible party. The responsible party for each activity shall be identified by the Responsibility Code.

E.4.7 Work Areas

All activities shall be identified in the project schedule by the work area in which the activity occurs. Activities shall not be allowed to cover more than one work area. The work area of each activity shall he identified by the Work Area Code.

E.4.8 Modification or Claim Number

Any activity that is added or changed by a contract modification subnet or used to justify claimed time shall be identified by a mod or claim code that changed the activity. Activities shall not belong to more than one modification or claim item. The modification or claim number of each activity shall be identified by the Mod or Claim Number. Changes should be added to the schedule by adding new activities.

{Method of adding a change activity to the schedule should be determined by ACO---Existing activities shall not be changed. ------Existing activities may be changed.}

E.4.9 Bid Item

All activities shall be identified in the project schedule by the Bid Item to which the activity belongs. An activity shall not contain work in more than one bid item. The bid item for each appropriate activity shall be identified by the Bid Item Code.

E.4.10 Phase of Work

All activities shall be identified in the project schedule by the phases of work in which the activity occurs. Activities shall not contain work in more than one phase of work. The project phase of each activity shall be by the unique Phase of Work Code.

E.4.11 Category of Work

All Activities shall be identified in the project schedule according to the category of work, which best describes the

activity. Category of work refers, but is not limited, to the procurement chain of activities including such items as submittals, approvals, procurement, fabrication, delivery, installation, start-up, and testing. The category of work for each activity shall be identified by the Category of Work Code.

E.4.12 Feature of Work

All activities shall be identified in the project schedule according to the feature of work to which the activity belongs. Feature of work refers, but is not limited to, a work breakdown structure for the project. The feature of work for each activity shall be identified by the Feature of Work Code.

E.4.13 Scheduled Project Completion

The schedule interval shall extend from NTP to the official contract completion date. The schedule shall have a total critical path duration equal to the contract duration in calendar days.

E.4.14 Project Start Date

The schedule shall start no earlier than the date on which the NTP was acknowledged. The Contractor shall include as the first activity in the project schedule an activity called "Start Project". The "Start Project" activity shall have a “ES” constraint date equal to the date that the NTP was acknowledged, and a zero day duration.

E.4.15 Constraint of Last Activity

Completion of the last activity in the schedule shall be constrained by the contract completion date. Calculation on project updates shall be such that if the early finish of the last activity falls after the contract completion date, then the float calculation shall reflect a negative float on the critical path. The Contractor shall include as the last activity in the project schedule an activity called "End Project". The "End Project" activity shall have a “LF” constraint date equal to the completion date for the project, and a zero day duration.

E.4.16 Early Project Completion

In the event the project schedule shows all contract work completed prior to the official contract completion date, the Contractor shall include an activity named “contingency” with no

cost and a duration equal to the number of calendar days from the date all the contract work is planned to be completed, to the official contract completion date as awarded. The contractor shall identify those activities that have been accelerated and/or those activities that are scheduled in parallel to support the Contractor's "early" completion. Contractor shall specifically address each of the activities noted in the narrative report at every project schedule update period to assist the Contracting Officer in evaluating the Contractor's ability to actually complete the project prior to the official contract completion date.

E.4.17 Interim Completion Dates

Contractually specified interim completion dates shall also be constrained to show negative float if the early finish date of the last activity in that phase falls after the interim completion date.

E.4.18 Start Phase

The Contractor shall include as the first activity for a project phase an activity called "Start Phase _____" where _____ refers to the phase of work. The "Start Phase _____" activity shall have a "ES" constraint date equal to the date on which the NTP was acknowledged, and a zero day duration.

E.4.19 Inspection/Acceptance phase

The contractor should include the following work activities with duration and cost:

CQC mechanical system test(indicate the specific system)

CQC electrical system test(indicate the specific system)

QA/DPW/BCE mechanical system acceptance/operational test(indicate specific system)

QA/DPW/BCE electrical system acceptance /operational test (indicate specific system)

CQC completion inspection of the entire project, contractor works off CQC punchlist

Prefinal inspection when the contract is substantially complete (see definition below)

contractor works off prefinal punchlist

final/acceptance inspection of the entire project

contractor works off final punchlist.

Contractor shall allow {30}{*ACO must determine the proper # of calendar days*} calendar days total duration prior to current contract completion date for the above stated activities. (See specification section 01445 Contractor Quality Control).

substantially complete= the facility is functionally completed for its intended use, as determined by the Contracting Officer)

E.4.20 End Phase

The Contractor shall include as the last activity in a project phase an activity called "End Phase _____" where _____ refers to the phase of work. The "End Phase _____" activity shall have a "LF" constraint date equal to the completion date for the project, and a zero day duration.

E.4.21 Default Progress Data Disallowed

Actual Start and Finish dates shall not be automatically updated by default mechanisms that may be included in CPM scheduling software systems. Actual Start and Finish dates on the CPM schedule shall match those dates provided from Contractor Quality Control Reports. The Contractor shall document the Actual Start and Finish dates on the Daily Quality Control report for every in-progress or completed activity, and ensure that the data contained on the Daily Quality Control reports is the sole basis for schedule updating. Updating of the percent complete and the remaining duration of any activity shall be independent functions. Program features which calculate one of these parameters from the other shall be disabled.

E.4.22 Out-of-Sequence Progress

Activities that have posted progress without all preceding logic being satisfied (Out-of-Sequence Progress) will be allowed only on a case-by-case approval of the Contracting Officer. The Contractor shall propose logic corrections to eliminate all out of sequence progress or justify not changing the sequencing for approval prior to submitting an updated project schedule.

E.4.23 Negative Lags

Lag duration contained in the project schedule shall not have a negative value.

E.4.24 Project Monthly and Specific Milestone Dates

Milestone dates shall be shown on the diagram for start of project, each monthly milestone for the critical path activity in progress as of the data date, specific milestones such as: foundation complete, structure complete, roof complete, facility dried in, interim completion dates, completion dates and other specific contract milestones as required by the Contracting Officer.

E.4.25 Critical Path

The critical path shall be clearly shown on all diagrams (as approved).

E.4.26 Banding

Activities shall be grouped to assist in the understanding of the activity sequence. Typically, this flow will group activities by category of work, work area and/or responsibility

E.4.27 S-Curves---cash flow curves

Earnings (cash flow) curves shall show scheduled ES/EF and LS/LF curves and actual progress plotted as of the data date. The cash flow curves are affected by the assigned cost and duration of the activities.

This requirement should be added if determined by the ACO: {}

E.4.28 Summary Network Diagram

A summary network diagram shall be provided, if the NAS diagrams consist of more than two sheets. The summary network diagram shall consist of a minimum of 50 activities and a maximum of 150 activities and shall be based on and supported by detailed diagrams. Related activities shall be grouped on the network. The critical path shall be plotted and highlighted generally along the center of the sheet with channels with increasing float placed towards the top or bottom. Milestones shall be indicated.

The summary network shall be time scaled using units of approximately one half inch equals one week or other suitable scale approved by the Contracting Officer. Weekends and holidays shall be indicated. Where slack exists, the activities shall be shown at the time when they are actually scheduled to be accomplished.

E.5 SCHEDULE REPORTS/SORTS

The format for each activity for the schedule reports listed below shall contain: Activity Numbers, Activity Description, Original Duration, Remaining Duration, Early Start Date, Early Finish Date, Late Start Date, Late Finish Date, Total Float. Actual Start and Actual Finish Dates shall he printed for those activities in progress or completed.

E.5.1 Activity Report/sort

A list of all activities sorted according to activity number.

E.5.2 Logic Report/sort

A list of Preceding and Succeeding activities for every activity in ascending order by activity number. Preceding and succeeding activities shall include all information listed above in paragraph Schedule Reports. A blank line shall be left between each activity grouping.

E.5.3 Total Float Report/sort

A list of all incomplete activities sorted in ascending order of total float. Activities which have the same amount of total float shall be listed in ascending order of Early Start Dates. Completed activities shall not be shown on this report.

E.5.4 Earnings Report/sort

A calculation of the Contractor's Total Earnings on the project from the NTP until the most recent Monthly Progress Meeting. This report shall reflect the Earnings of specific activities based on the agreements made in the field and approved between the Contractor and Contracting Officer at the most recent Monthly Progress Meeting. Provided that the Contractor has provided a complete schedule update, this report shall serve as the basis of determining Contractor Payment. Activities shall be grouped by bid item and sorted by activity numbers. This report shall: sum all activities in a bid item and provide a bid item percent; and

complete and sum all bid items to provide a total project percent complete. The printed report shall contain, for each activity: the Activity Number, Activity Description, original Budgeted Amount, Total Quantity, Quantity to Date, Percent Complete (based on cost), and Earnings to Date.

E.5.5 Milestone Report/Sort

The established monthly and special milestones shall be included in this report.

E.5.6 Late Start Sort

E.5.7 Bid Item Sort

{ACO must determine the required sorts as needed for the complexity of the contract}

E.6 REMAINING DURATIONS

The estimated Remaining Duration for each activity in-progress. Time-based progress calculations shall be based on Remaining Duration for each activity.

E.7 LOGIC CHANGES

All logic changes pertaining to NTP on change orders, change orders to be incorporated into the schedule, contractor proposed changes in work sequence, corrections to schedule logic for out-of-sequence progress, lag duration, and other changes that have been made pursuant to contract provisions shall be specifically identified and discussed.

E.8 OTHER CHANGES

Other changes required due to delays in completion of any activity or group of activities include: 1) delays beyond the Contractor's control, such as strikes and unusual weather. 2) delays encountered due to submittals (material delivery), Government Activities, deliveries or work stoppages which make re-planning the work necessary. 3) Changes required to correct a schedule that does not represent the actual or planned prosecution and progress of the work.

E.9 APPROVED CHANGES VERIFICATION

Only project schedule changes that have been previously approved by the Contracting Officer shall be included in the schedule submission. The Narrative Report shall specifically reference, on an activity by activity basis, all changes made since the previous period and relate each change to documented, approved schedule changes. The contractor shall not change the NAS schedule without specific written approval from the Contracting Officer. Unauthorized changes are not acceptable.

E.10 NARRATIVE REPORT

A Narrative Report shall be provided with the preliminary, initial, and each monthly update of the project schedule. The narrative report shall include: a description of activities along the most critical paths, a description of current and anticipated problem areas or delaying factors and their impact, and an explanation of corrective actions taken or required to be taken. The narrative report is expected to relay to the Government, the Contractor's thorough analysis of the schedule output and its plans to compensate for any problems, either current or potential, which are revealed through that analysis.

F. MONTHLY PROGRESS MEETINGS

F.1. A progress update meeting will be held onsite between USACE and the authorized contractor representatives, on the agreed cut-off date established at the preconstruction conference. During this meeting the Contractor shall indicate its requested percentage completed on each activity which there was a revised percentages of completion. The ACO must approve actual progress percentages for each activity.

{F.2 {The above paragraph may be deleted by ACO ---applicable for small contracts}

F.3 PROGRESS MEETING ATTENDANCE

The Contractor's Project Manager/Superintendent {} shall attend the regular monthly progress meeting for the review of the progress and the narrative report after entering the update data and NAS Project Schedule has been updated. The onsite Government representatives shall be advised of the meetings location, time and date.

{Delete Scheduler if not included in paragraph B above}

{F.4 UPDATE SUBMISSION FOLLOWING PROGRESS MEETING

A complete update of the entire NAS project progress schedule containing all approved revisions, and adjustments, based on the monthly progress meeting, shall be submitted not later than 6 working days after the monthly progress meeting, (if applicable).}

[Above paragraph may be deleted by ACO for small contracts}

G. <u>REQUESTS FOR TIME EXTENSIONS</u>

In the event the Contractor requests a time extension of the contract completion date, or any interim milestone date, the Contractor shall furnish the following for a determination as to whether or not the Contractor is entitled to an extension of time under the provisions of the contract: justification, project schedule data, and supporting evidence as the Contracting Officer may deem necessary. Submission of proof of delay, based on revised activity logic, duration, and costs (updated to the specific date that the delay occurred---subnet of activities) is required for any time extension approvals. The project schedule shall clearly display that the Contractor has used, in full, all the float time available for the work involved with this request. Actual delays that are found to be caused by the Contractor's own actions, which result in the extension of the schedule, shall not be a cause for a time extension to the contract completion date.

G.1 <u>SUBMISSION REQUIREMENTS FOR JUSTIFICATION OF REQUEST FOR TIME EXTENSION</u>

The Contractor shall submit a comprehensive time analysis and justification for each "Request for Proposal" for a change in the contract, based upon the most recent approved schedule update at the time of the RFP is issued. Such a time analysis and justification shall be in accordance with the requirements of other appropriate Contract Clauses and shall include, as a minimum:

a. A subnet of activities indicating all new change activities and the affect on existing schedule activities.

b. A brief explanation of the causes of the change.

c. An analysis of the overall impact the subnet has on the approved schedule.

Activities impacted in each justification for change shall be identified by a unique activity code contained in the required data file.

H. MODIFICATIONS TO THE CONTRACT

Upon receipt of the signed SF 30 for changes, prior to settlement of price and/or time, the Contractor shall submit proposed schedule revisions to the Contracting Officer within 2 weeks of the SF 30 being issued. The proposed revisions to the schedule will be approved by the Contracting Officer prior to inclusion of those changes within the project schedule. Should the contractor fail or refuse to submit the provisions, the Contracting Officer may furnish the Contractor with suggested revisions to the project schedule. Upon receipt, the Contractor shall include these revisions in the project schedule, until the final changes and impacts have been negotiated. If the Contractor has any objections to the revisions furnished by the Contracting Officer, the Contractor shall advise the Contracting Officer within 2 weeks of receipt of the revisions. Regardless of the objections, the Contractor shall continue to update the schedule with the Contracting Officer's revisions until a mutual agreement on the revisions is reached. If the Contractor fails to submit alternative revisions within 2 weeks of receipt of the Contracting officer's proposed revisions, the contractor will be deem to have concurred with the Contracting Officer's proposed revisions. The proposed revisions will be the basis for an "equitable adjustment" for performance of the work.

Bilateral and unilateral modifications must be entered into the schedule at the next update after receipt of the signed SF 30. Entries into the schedule must be approved by the ACO.

I. CONTRACTOR FALLS BEHIND THE APPROVED NAS PROJECT SCHEDULE

If the Contractor falls behind its approved schedule (greater than 5% behind the LS/LF cash flow curve or more than 30 days negative float) or performs the work in such a manner that the network diagram and mathematical analysis no longer indicate reasonable logic and duration for completion of the work by the current contract completion date, as determined by the Contracting Officer, the Contractor shall promptly provide a supplemental NAS recovery or completion schedule for completion by the current completion date, by reducing the remaining durations,or revising logic, as approved by the Contracting Officer. The supplemental schedule shall be (resource loaded

with crew size and productivity for each remaining activity, and indicating overtime, weekend work, double shifts needed to regain the schedule), in accordance with FAR 52.236-15, without additional cost to the Government. Failure to perform work and maintain progress in accordance with the approved supplemental completion schedule may result in corrective action by the Contraction Officer in accordance with FAR 52.236-15.

J. OWNERSHIP OF FLOAT

All float available in the schedule, at any time, shall not be considered for the exclusive use of either the Government or the Contractor.

PROJECT TABLE OF CONTENTS

DIVISION 01 - GENERAL REQUIREMENTS

01090 SOURCES FOR REFERENCE PUBLICATIONS
01330 SUBMITTAL PROCEDURES
01355 ENVIRONMENTAL PROTECTION
01451 CONTRACTOR QUALITY CONTROL
01500 TEMPORARY CONSTRUCTION FACILITIES
01780 AS-BUILT DRAWINGS SUBMITTALS

DIVISION 02 - SITE WORK

02091 PCB BALLASTS, TRANSFORMERS AND HAZARDOUS WASTE LAMP REMOVAL AND RECYLING
02220 DEMOLITION
02300 EARTHWORK
02315 EXCAVATION, FILLING AND BACKFILLING FOR BUILDINGS
02316 EXCAVATION, TRENCHING, AND BACKFILLING FOR UTILITIES SYSTEMS
02364 TERMITICIDE TREATMENT MEASURES FOR SUBTERRANEAN TERMITE CONTROL
02374 GEOSYNTHETIC DRAINAGE LAYER
02510 WATER DISTRIBUTION SYSTEM
02531 SANITARY SEWERS
02547 BITUMINOUS PAVEMENT WITH BASE COURSE
02621 FOUNDATION DRAINAGE SYSTEM
02630 STORM-DRAINAGE SYSTEM
02754 CONCRETE PAVEMENTS FOR SMALL PROJECTS
02770 CONCRETE SIDEWALKS AND CURBS AND GUTTERS
02921 SEEDING
02922 SODDING
02930 EXTERIOR PLANTING

DIVISION 03 - CONCRETE

03100 STRUCTURAL CONCRETE FORMWORK
03150 EXPANSION JOINTS, CONTRACTION JOINTS, AND WATERSTOPS
03200 CONCRETE REINFORCEMENT
03300 CAST-IN-PLACE STRUCTURAL CONCRETE
03410 PLANT-PRECAST STRUCTURAL CONCRETE

DIVISION 04 - MASONRY

04200 MASONRY
04220 NONBEARING MASONRY VENEER/STEEL STUD WALLS
04900 CLEANING OF MASONRY

DIVISION 05 - METALS

05120 STRUCTURAL STEEL
05210 STEEL JOISTS
05300 STEEL DECKING
05450 PRE-ENGINEERED LIGHT GAUGE STEEL TRUSSED FRAMES
05500 MISCELLANEOUS METAL

DIVISION 06 - WOODS & PLASTICS

06100 ROUGH CARPENTRY
06200 FINISH CARPENTRY

DIVISION 07 - THERMAL & MOISTURE PROTECTION

07132 BITUMINOUS WATERPROOFING
07220 ROOF INSULATION
07412 NON-STRUCTURAL METAL ROOFING
07551 MODIFIED BITUMEN ROOFING
07600 SHEET METALWORK, GENERAL
07840 FIRESTOPPING
07900 JOINT SEALING

DIVISION 08 - DOORS & WINDOWS

08110 STEEL DOORS AND FRAMES
08210 WOOD DOORS
08520 ALUMINUM AND ENVIRONMENTAL CONTROL ALUMINUM WINDOWS
08700 BUILDERS' HARDWARE
08810 GLASS AND GLAZING

DIVISION 09 - FINISHES

09225 STUCCO
09250 GYPSUM WALLBOARD
09510 ACOUSTICAL CEILINGS
09650 RESILIENT FLOORING
09680 CARPET
09720 WALLCOVERINGS
09900 PAINTING, GENERAL

DIVISION 10 - SPECIALTIES

10100 VISUAL COMMUNICATIONS SPECIALTIES
10201 METAL WALL LOUVERS
10440 INTERIOR SIGNAGE

DIVISION 12 - FURNISHINGS

12490 WINDOW TREATMENT
12600 THEATER CHAIRS

DIVISION 13 - SPECIAL CONSTRUCTION

13080 SEISMIC PROTECTION FOR MISCELLANEOUS EQUIPMENT
13280 ASBESTOS ABATEMENT
13721 SMALL INTRUSION DETECTION SYSTEM
13851 FIRE DETECTION AND ALARM SYSTEM, ADDRESSABLE
13930 WET PIPE SPRINKLER SYSTEM, FIRE PROTECTION

DIVISION 15 - MECHANICAL

15070 SEISMIC PROTECTION FOR MECHANICAL EQUIPMENT
15080 THERMAL INSULATION FOR MECHANICAL SYSTEMS
15400 PLUMBING, GENERAL PURPOSE
15569 WATER AND STEAM HEATING; OIL, GAS OR BOTH; UP TO 20 MBTUH
15650 CENTRAL REFRIGERATED AIR-CONDITIONING SYSTEM
15895 AIR SUPPLY, DISTRIBUTION, VENTILATION, AND EXHAUST SYSTEM
15951 DIRECT DIGITAL CONTROL FOR HVAC
15990 TESTING, ADJUSTING, AND BALANCING OF HVAC SYSTEMS
15995 COMMISSIONING OF HVAC SYSTEMS

DIVISION 16 - ELECTRICAL

16370 ELECTRICAL DISTRIBUTION SYSTEM, AERIAL
16375 ELECTRICAL DISTRIBUTION SYSTEM, UNDERGROUND
16415 ELECTRICAL WORK, INTERIOR
16710 PREMISES DISTRIBUTION SYSTEM
16770 PUBLIC ADDRESS SYSTEMS

-- End of Project Table of Contents --

SECTION TABLE OF CONTENTS

DIVISION 01 - GENERAL REQUIREMENTS

SECTION 01090

SOURCES FOR REFERENCE PUBLICATIONS

01/01

PART 1 GENERAL

1.1 REFERENCES
1.2 ORDERING INFORMATION

-- End of Section Table of Contents --

SECTION 01090

SOURCES FOR REFERENCE PUBLICATIONS
01/01

PART 1 GENERAL

1.1 REFERENCES

Various publications are referenced in other sections of the specifications to establish requirements for the work. These references are identified in each section by document number, date and title. The document number used in the citation is the number assigned by the sponsoring organization, e.g. ASTM B 564 Nickel Alloy Forgings. However, when the sponsoring organization has not assigned a number to a document, an identifying number has been assigned for reference purposes.

1.2 ORDERING INFORMATION

The addresses of the organizations whose publications are referenced in other sections of these specifications are listed below, and if the source of the publications is different from the address of the sponsoring organization, that information is also provided. Documents listed in the specifications with numbers which were not assigned by the sponsoring organization should be ordered from the source by title rather than by number.

ACI INTERNATIONAL (ACI)

P.O. Box 9094
Farmington Hills, MI 48333-9094
Ph: 248-848-3700
Fax: 248-848-3701
Internet: http://www.aci-int.org
AOK 6/00
LOK 6/00

ACOUSTICAL SOCIETY OF AMERICA (ASA)

2 Huntington Quadrangle
Melvile, NY 11747-4502
Ph: 516-576-2360
Fax: 516-576-2377
email: asa@aip.org
Internet: http://asa@aip.org
AOK 6/00
LOK 6/00

AGRICULTURAL MARKETING SERVICE (AMS)

Seed Regulatory and Testing Branch

USDA, AMS, LS Div.
Room 209, Bldg. 306, BARC-East
Beltsville, MD 20705-2325
Ph: 301-504-9430
Fax: 301-504-8098
Internet: http://www.ams.usda.gov/lsg
e-mail: james_p_triplitt@usda.gov
AOK 6/00
LOK 6/00

AIR CONDITIONING AND REFRIGERATION INSTITUTE (ARI)

4301 North Fairfax Dr., Suite 425
ATTN: Pubs Dept.
Arlington, VA 22203
Ph: 703-524-8800
Fax: 703-528-3816
E-mail: ari@ari.org
Internet: www.ari.org
AOK 6/00
LOK 6/00

AIR CONDITIONING CONTRACTORS OF AMERICA (ACCA)

1712 New Hampshire Avenue, NW
Washington, DC 20009
Ph: 202-483-9370
FAX: 202-588-1217
Intrnet: www.acca.org
AOK 6/00
LOK 6/00

AIR DIFFUSION COUNCIL (ADC)

104 So. Michigan Ave., No. 1500
Chicago, IL 60603
Ph: 312-201-0101
Fax: 312-201-0214
Internet: www.flexibleduct.org
AOK 6/00
LOK 6/00

AIR MOVEMENT AND CONTROL ASSOCIATION (AMCA)

30 W. University Dr.
Arlington Heights, IL 60004-1893
Ph: 847-394-0150
Fax: 847-253-0088
Internet: www.amca.org
AOK 6/00
LOK 6/00

ALUMINUM ASSOCIATION (AA)

900 19th Street N.W.
Washington, DC 20006
Ph: 202-862-5100
Fax: 202-862-5164
Internet: www.aluminum.org
AOK 6/00
LOK 6/00

AMERICAN ARCHITECTURAL MANUFACTURERS ASSOCIATION (AAMA)

1827 Walden Ofc. Sq.
Suite 104
Schaumburg, IL 60173-4268
Ph: 847-303-5664
Fax: 847-303-5774
Internet: www.aamanet.org
AOK 6/00
LOK 6/00

AMERICAN ASSOCIATION OF STATE HIGHWAY AND TRANSPORTATION OFFICIALS (AASHTO)

444 N. Capital St., NW, Suite 249
Washington, DC 20001
Ph: 800-231-3475 202-624-5800
Fax: 800-525-5562 202-624-5806
Internet: www.aashto.org
AOK 6/00
LOK 6/00

NOTE: AASHTO documents with numbers beginning with M or T are available only in Standard Specifications for Transportation Materials and Methods of Sampling and Testing, 1998 @$289.00\X

AMERICAN ASSOCIATION OF TEXTILE CHEMISTS AND COLORISTS (AATCC)

P.O. Box 12215
1 Davis Drive
Research Triangle Park, NC 27709-2215
Ph: 919-549-8141
Fax: 919-549-8933
Internet: aatcc.org
AOK 6/00
LOK 6/00

AMERICAN BEARING MANUFACTURERS ASSOCIATION (AFBMA)

1200 19th Street, NW, Suite 300
Washington, DC 20036-2422
Ph: 202-429-5155
Fax: 202-828-6042
Internet: abma-dc.org
AOK 6/00

LOK 6/00

AMERICAN BOILER MANUFACTURERS ASSOCIATION (ABMA)

950 North Glebe Road, Suite 160
Arlington, Virginia 22203-1824
Ph:703-522-7350
Fax: 703-522-2665
Internet: abma.com
AOK 6/00
LOK 6/00

AMERICAN CONCRETE PIPE ASSOCIATION (ACPA)

222 West Las Colinas Blvd., Suite 641
Irving, TX 75039-5423
Ph: 972-506-7216
Fax: 972-506-7682
Internet: http://www.concrete-pipe.org
e-mail: info@concrete-pipe.org
AOK 6/00
LOK 6/00

AMERICAN CONFERENCE OF GOVERNMENTAL INDUSTRIAL HYGIENISTS (ACGIH)

1330 Kemper Meadow Dr.
Suite 600
Cincinnati, OH 45240
Ph: 513-742-2020
Fax: 513-742-3355
Internet: www.acgih.org
E-mail: pubs@acgih.org
AOK 6/00
LOK 6/00

AMERICAN FOREST & PAPER ASSOCIATION (AF&PA)

American Wood Council
ATTN: Publications Dept.
1111 Nineteenth St. NW, Suite 800
Washington, DC 20036
Ph: 800-294-2372 202-463-2700
Fax: 202-463-2471
Internet: http://www.afandpa.org
AOK 6/00
LOK 6/00

AMERICAN GAS ASSOCIATION (AGA)

400 N. Capitol St. N.W.Suite 450
Washington, D.C. 20001
Ph: 202-824-7000
Fax: 202-824-7115
Internet: www.aga.org

AOK 6/00
LOK 6/00

AMERICAN GAL ASSOCIATION LABORATORIES (AGAL)

Address
Ph:
Fax:
Internet:

AMERICAN GEAR MANUFACTURERS ASSOCIATION (AGMA)

1500 King St., Suite 201
Alexandria, VA 22314-2730
Ph: 703-684-0211
Fax: 703-684-0242
Internet: www.agma.org
AOK 6/00
LOK 6/00

AMERICAN INSTITUTE OF STEEL CONSTRUCTION (AISC)

One East Wacker Dr., Suite 3100
Chicago, IL 60601-2001
Ph: 312-670-2400
Publications: 800-644-2400
Fax: 312-670-5403
Internet: www.aisc.org
AOK 6/00
LOK 6/00

AMERICAN INSTITUTE OF TIMBER CONSTRUCTION (AITC)

7012 So. Revere Parkway, Suite 140
Englewood, CO 80112
Ph: 303-792-9559
Fax: 303-792-0669
Internet: www.aitc-glulam.org
AOK 6/00
LOK 6/00

AMERICAN IRON AND STEEL INSTITUTE (AISI)

1101 17th St., NW Suite 1300
Washington, DC 20036
Ph: 202-452-7100
AOK 6/00
LOK 6/00

AMERICAN NATIONAL STANDARDS INSTITUTE (ANSI)

11 West 42nd St
New York, NY 10036

Ph: 212-642-4900
Fax: 212-398-0023
Internet: www.ansi.org/
Note: Documents beginning with the letter "S" can be ordered from:
Acoustical Society of America
P. O. Box 1020
Sweickley, PA 15143-9998
Ph: 412-741-1979
Fax: 412-741-0609
Internet: asa.aip.org
AOK 6/00
LOK 6/00

AMERICAN NURSERY AND LANDSCAPE ASSOCIATION (ANLA)

1250 I St., NW, Suite 500
Washington, DC 20005-3922
Ph: 202-789-2900
FAX: 202-789-1893
AOK 6/00
LOK 6/00

AMERICAN PETROLEUM INSTITUTE (API)

1220 L St., NW
Washington, DC 20005-4070
Ph: 202-682-8000
Fax: 202-962-4776
Internet: http://www.api.org
AOK 6/00
LOK 6/00

AMERICAN RAILWAY ENGINEERING & MAINTENANCE-OF-WAY ASSOCIATION (AREMA)

8201 Corporate Dr., Suite 1125
Landover, MD 20785-2230
Ph: 301-459-3200
Fax: 301-459-8077
Internet: www.arema.org
AOK 6/00
LOK 6/00

AMERICAN SOCIETY FOR NONDESTRUCTIVE TESTING (ASNT)

1711 Arlingate Lane
P.O. Box 28518
Columbus, OH 43228-0518
Ph: 800-222-2768
Fax: 614-274-6899
Internet: www.asnt.org
AOK 6/00
LOK 6/00

AMERICAN SOCIETY FOR QUALITY (ASQ)

611 East Wisconscin Ave.
P.O. Box 3005
Milwaukee, WI 53201-3005
Ph: 800-248-1946
Fax: 414-272-1734
Internet: http://www.asq.org
AOK 6/00
LOK 6/00

AMERICAN SOCIETY FOR TESTING AND MATERIALS (ASTM)

100 Barr Harbor Drive
West Conshohocken, PA 19428-2959
Ph: 610-832-9585
Fax: 610-832-9555
Internet: www.astm.org
AOK 6/00
LOK 6/00

NOTE: The annual ASTM Book of Standards (66 Vol) is available for $3500.00. Prices of individual standards vary.

AMERICAN SOCIETY OF CIVIL ENGINEERS (ASCE)

1801 Alexander Bell Drive
Reston, VA 20190-4400
Ph: 703-295-6300 - 800-548-2723
Fax: 703-295-6222
Internet: www.asce.org
e-mail: marketing@asce.org
AOK 6/00
LOK 6/00

AMERICAN SOCIETY OF HEATING, REFRIGERATING AND AIR-CONDITIONING ENGINEERS (ASHRAE)

1791 Tullie Cir., NE
Atlanta, GA 30329
Ph: 800-527-4723 or 404-636-8400
Fax: 404-321-5478
Internet: http://www.ashrae.org
AOK 6/00
LOK 6/00

AMERICAN SOCIETY OF SANITARY ENGINEERING FOR PLUMBING AND SANITARY RESEARCH (ASSE)

901 Canterbury, Suite A
Westlake, OH 44145
Ph: 440-835-3040
Fax: 440-835-3488

E-mail: asse@ix.netcom.com
Internet: www.asse-plumbing.org
AOK 6/00
LOK 6/00

AMERICAN WATER WORKS ASSOCIATION(AWWA)

6666 West Quincy
Denver, CO 80235
Ph: 800-926-7337 - 303-794-7711
Fax: 303-347-0804
Internet: www.awwa.org
AOK 6/00
LOK 6/00

AMERICAN WELDING SOCIETY (AWS)

550 N.W. LeJeune Road
Miami, FL 33126
Ph: 800-443-9353 - 305-443-9353
Fax: 305-443-7559
Internet: http://www.amweld.org
AOK 6/00
LOK 6/00

AMERICAN WOOD-PRESERVERS' ASSOCIATION (AWPA)

P.O. Box 5690
Grandbury, TX 76049-0690
Ph: 817-326-6300
Fax: 817-326-6306
Internet: http://www.awpa.com
AOK 8/00
LOK 6/00

NOTE: AWPA Book of Standards is published yearly @$75.00; individual standards may be ordered separately for $12.00 to $28.00 each.

APA - THE ENGINEERED WOOD ASSOCIATION (APA)

P.O.Box 11700
Tacoma, WA 98411-0700
Ph: 253-565-6600
Fax: 253-565-7265
Internet: www.apawood.org
AOK 8/00
LOK 6/00

Note: Prices are available only by calling APA

ARCHITECTURAL WOODWORK INSTITUTE (AWI)

1952 Isaac Newton Square West
Reston, VA 20190
Ph: 703-733-0600
Fax: 703-733-0584
Internet: www.awinet.org
AOK 8/00
LOK 6/00

ARMY ENVIRONMENTAL CENTER (AEC)

5179 Hoadley Road
Aberdeen Roving Ground, MD 21010-5401
Internet: www.aec.army.mil
AOK 8/00

ARMY PAMPHLET (DAPAM)

www.usace.army.mil/publications

ASBESTOS CEMENT PIPE PRODUCERS ASSOCIATION (ACPPA)

1745 Jefferson Davis Highway, Suite 406
Arlington, VA 22202
Ph: 703-412-1153
Fax: 703-412-1152

ASME INTERNATIONAL (ASME)

Three Park Avenue
New York, NY 10016-5990
Ph: 212-591-7722
Fax: 212-591-7674
Internet: www.asme.org
AOK 8/00
LOK 6/00

ASPHALT INSTITUTE (AI)

Research Park Dr.
P.O. Box 14052
Lexington, KY 40512-4052
Ph: 606-288-4960
Fax: 606-288-4999
Internet: www.asphaltinstitute.org
AOK 8/00
LOK 6/00

ASSOCIATED AIR BALANCE COUNCIL (AABC)

1518 K St., NW, Suite 503

Washington, DC 20005
Ph: 202-737-0202
Fax: 202-638-4833
Internet: www.aabchq.com
8/00
LOK 6/00

ASSOCIATION FOR THE ADVANCEMENT OF MEDICAL INSTRUMENTATION (AAMI)

1110 N. Globe Rd., Suite 220
Arlington, VA 22201-5762
Ph: 703-525-4890
Fax: 703-525-1424
Internet: www.aami.org
AOK 8/00
LOK 6/00

ASSOCIATION OF EDISON ILLUMINATING COMPANIES (AEIC)

600 No. 18th St.
P.O. Box 2641
Birmingham, AL 35291
Ph: 205-257-2530
Fax: 205-257-2540
Internet: http://www.aeic.org
AOK 8/00
LOK 6/00

ASSOCIATION OF HOME APPLIANCE MANUFACTURERS (AHAM)

1111 19th St. NW., Suite 402
Washington, DC 20036
Ph: 202-872-5955
Fax: 202-872-9354
Internet: http://www.aham.org
AOK 8/00
LOK 6/00

ASSOCIATION OF IRON AND STEEL ENGINEERS (AISE)

Three Gateway Center, Suite 1900
Pittsburg, PA 15222-1004
Ph: 412-281-6323
Fax: 412-281-4657
Internet: http://www.aise.org
AOK 8/00
LOK 6/00

BIFMA INTERNATIONAL (BIFMA)

2680 Horizon Drive SE, Suite A-1
Grand Rapids, MI 49546-7500
Ph: 616-285-3963
Fax: 616-285-3765

Internet: www.bifma.com
E-mail: email@bifma.com
AOK 8/00
LOK 6/00

BIOCYCLE, JOURNAL OF WASTE RECYCLING

BRICK INSTITUTE OF AMERICA (BIA)

11490 Commerce Park Dr., Suite 308
Reston, VA 22091-1525
Ph: 703-620-0010
Fax: 703-620-3928
Internet: www.bia.org
AOK 8/00
LOK 6/00

BUILDERS HARDWARE MANUFACTURERS ASSOCIATION (BHMA)

355 Lexington Ave.
17th floor
New York, NY 10017-6603
Ph: 212-297-2100
Fax: 212-370-9047
Internet: www.buildershardware.com
AOK 8/00
LOK 6/00

BUILDING OFFICIALS & CODE ADMINISTRATORS INTERNATIONAL (BOCA)

4051 W. Flossmoor Rd.
Country Club Hills, IL 60478
Ph: 708-799-2300
Fax: 708-799-4981
Internet: www.bocai.org
AOK 8/00
LOK 6/00

BUREAU OF RECLAMATION (BOR)

Denver Federal Center
P.O. Box 25007
Denver, CO 80225
Ph: 303-445-2080
Order from:
National Technical Information
Services (NTIS)
5285 Port Royal Rd.
Springfield, VA 22161
Ph: 703-605-6000
Fax: 703-605-6900
Internet: www.ntis.org
AOK 8/00

LOK 6/00

CALIFORNIA DEPARTMENT OF TRANSPORTATION (CDT)

Publication Distribution Unit
1900 Royal Oaks Dr.
Sacramento, CA 95815
Ph: 916-445-3520 or 916-227-7000 (CA Transportation Lab)
Fax: 916-324-8997

CALIFORNIA REDWOOD ASSOCIATION (CRA)

405 Enfrente Drive., Suite 200
Novato, CA 94949
Ph: 415-382-0662
Fax: 415-382-8531
Internet: www.calredwood.org
AOK 8/00
LOK 6/00

CARPET AND RUG INSTITUTE (CRI)

310 Holiday Ave.
Dalton, GA 30720
P.O. Box 2048
Dalton, GA 30722-2048
Ph: 706-278-0232
Fax: 706-278-8835
Internet: www.carpet-rug.com
AOK 8/00
LOK 6/00

CAST IRON SOIL PIPE INSTITUTE (CISPI)

5959 Shallowford Rd., Suite 419
Chattanooga, TN 37421
Ph: 423-892-0137
Fax: 423-892-0817
Internet: www.cispi.org
AOK 8/00
LOK 6/00

CEILINGS & INTERIOR SYSTEMS CONSTRUCTION ASSOCIATION (CISCA)

1500 Lincoln Highway, Suite 202
St. Charles, IL 60174
Ph: 630-584-1919
Fax: 630-584-2003
Internet: www.cisca.org
AOK 8/00
LOK 6/00

CHLORINE INSTITUTE (CI)

2001 L St., NW Suite 506
Washington, DC 20036
Ph: 202-775-2790
Fax: 202-223-7225
Internet: www.cl2.com
AOK 8/00
LOK 6/00

CODE OF FEDERAL REGULATIONS (CFR)

Order from:
Government Printing Office
Washington, DC 20402
Ph: 202-512-1800
Fax: 202-275-7703
Internet: http://www.gpo.gov
AOK 8/00
LOK 6/00

COMMERCIAL ITEM DESCRIPTIONS (CID)

Order from:
General Services Administration
Federal Supply Service Bureau
470 E L'Enfant Plaza, S.W., Suite 8100
Washington, DC 20407
Ph: 202-619-8925
Internet: http://pub.fss.gsa.gov/h1-pub.html
LOK 6/00

COMPRESSED GAS ASSOCIATION (CGA)

1725 Jefferson Davis Highway, Suite 1004
Arlington, VA 22202-4102
Ph: 703-412-0900
Fax: 703-412-0128
Internet: www.cganet.com
e-mail: Customer_Service@cganet.com
AOK 8/00
LOK 6/00

CONCRETE REINFORCING STEEL INSTITUTE (CRSI)

933 N. Plum Grove Rd.
Schaumburg, IL 60173-4758
Ph: 847-517-1200
Fax: 847-517-1206
Internet: www.crsi.org
AOK 8/00
LOK 6/00

CONSUMER PRODUCT SAFETY COMMISSION (CPSC)

4330 East-West Highway

Bethesda, Maryland 20814-4408
Ph: 301-504-0990
Internet: www.cpsc.gov
AOK
LOK 6/00

CONVEYOR EQUIPMENT MANUFACTURERS ASSOCIATION (CEMA)

6724 Lone Oak Blvd.
Naples, Florida 34109
Ph: 941-514-3441
Fax: 941-514-3470
Internet: www.cemanet.org
AOK 8/00
LOK 6/00

COOLING TOWER INSTITUTE (CTI)

530 Wells Fargo Dr., Suite 218, Houston, TX 77090
Ph: 281-583-4087
Fax: 281-537-1721
Internet: www.cti.org
AOK 8/00
LOK 6/00

COPPER DEVELOPMENT ASSOCIATION (CDA)

260 Madison Ave.
New York, NY 10016
Ph: 212-251-7200
Fax: 212-251-7234
E-mail: http://www.copper.org
AOK 8/00
LOK 6/00

CORPS OF ENGINEERS (COE)

Order from:
U.S. Army Engineer Waterways Experiment Station
ATTN: Technical Report Distribution Section, Services Branch, TIC
3909 Halls Ferry Rd.
Vicksburg, MS 39180-6199
Ph: 601-634-2664
Fax: 601-634-2388
Internet: www.usace.army.mil
AOK 8/00
LOK 6/00

NOTE: COE Handbook for Concrete and Cement (Documents w/prefix CRD-C) (1949-present; 2 Vol) free to Government offices; $10.00 plus $8.00 per yr for 4 qtrly supplements to others). Individual documents, single copies free. Order from address above.

INTERNATIONAL CODE COUNCIL (ICC)

5203 Leesburg Pike, Suite 708
Falls Church, VA 22041
Ph: 703-931-4533
Fax: 703-379-1546
Internet: www.intlcode.org
AOK 8/00
LOK 6/00

DEPARTMENT OF AGRICULTURE (USDA)

14TH STREET & INDEPENDENCE AVE. S.W.
WASHINGTON, D.C. 20250
Ph: (202) 720-2791
Publications: 301-344-2340
Internet: www.usda.gov
AOK 8/00
LOK 6/00

DEPARTMENT OF COMMERCE (DOC)

Order From:
National Technical Information Service
5285 Port Royal Road
Springfield, VA 22161
Ph: 703-605-6000
Fax: 703-605-6900
Internet: http://www.ntis.gov
AOK 8/00
LOK 6/00

DEPARTMENT OF DEFENSE (DOD)

Order from:
National Technical Information Service
5285 Port Royal Road
Springfield, VA 22161
Ph: 703-605-6040
FAX: 703-487-4639
AOK 8/00
LOK 6/00

DEPARTMENT OF HOUSING AND URBAN DEVELOPMENT (HUD)

Order from:
HUD User
P.O. Box 6091
Rockville, MD 20849
Ph: 800-245-2691
Fax: 301-519-5767
Internet: www.huduser.org
e-mail: Huduser@aspensys.com

AOK 8/00
LOK 6/00

DEPARTMENT OF STATE (SD)

ATTN: DS/PSP/SEP
SA-6, Room 804
Washington, DC 20522-0602
Ph: 703-875-6537
LOK 6/00

DOOR AND ACCESS SYSTEM MANUFACTURERS ASSOCIATION (DASMA)

1300 Sumner Avenue
Cleveland, OH 44115-2851
Ph: 216-241-7333
Fax: 216-241-0105
Internet: www.dasma.com
e-mail: dasma@dasma.com
AOK 8/00
LOK 6/00

DOOR AND HARDWARE INSTITUTE (DHI)

14150 Newbrook Dr.Suite 200
Chantilly, VA 20151-2223
Ph: 703-222-2010
Fax: 703-222-2410
Internet: www.dhi.org
E-mail: techdept@dhi.org
AOK 8/00
LOK 6/00

DUCTILE IRON PIPE RESEARCH ASSOCIATION (DIPRA)

245 Riverchase Parkway East, Suite 0
Birmingham, AL 35244
Ph: 205-402-8700
Fax: 205-402-8730
Internet: www.dipra.org
E-mail: info@dipra.org
AOK 8/00
LOK 6/00

EIFS INDUSTRY MEMBERS ASSOCIATION (EIMA)

3000 Corporate Center Drive, Suite 270
Morrow, GA 30260
Ph: 770-968-7945
Fax: 700-968-5818
Internet: www.eifsfacts.com
AOK 8/00
LOK 6/00

ELECTRONIC INDUSTRIES ALLIANCE (EIA)

2500 Wilson Blvd.
Arlington, VA 22201-3834
Ph: 703-907-7500
Fax: 703-907-7501
Internet: www.eia.org
AOK 8/00
LOK 6/00

ENGINEERING MANUALS (EM)

USACE Publications Depot
Attn: CEIM-SP-D
2803 52nd Avenue
Hyattsville, MD 20781-1102
Ph: 301-394-0081
Fax: 301-394-0084
Internet: www.usace.army.mil
AOK 8/00
LOK 6/00

ENGINEERING PAMPHLETS (EP)

USACE Publications Depot
Attn: CEIM-SP-D
2803 52nd Avenue
Hyattsville, MD 20781-1102
Ph: 301-394-0081
Fax: 301-394-0084
Internet: www.usace.army.mil
AOK 8/00
LOK 6/00

ENGINEERING REGULATIONS (ER)

USACE Publications Depot
Attn: CEIM-SP-D
2803 52nd Avenue
Hyattsville, MD 20781-1102
Ph: 301-394-0081
Fax: 301-394-0084
Internet: www.usace.army.mil
AOK 8/00
LOK 6/00

ELECTRICAL GENERATING SYSTEMS ASSOCIATION (EGSA)

1650 South Dixie Highway, Ste. 500
Boca Raton, FL 33432
Ph: 561-750-5575
Fax: 561-395-8557
Internet: www.egsa.org
AOK 8/00

LOK 6/00

ENVIRONMENTAL PROTECTION AGENCY (EPA)

Ariel Rios Building
1200 Pennsylvania Avenue, N.W.
Washington, DC 20460
Ph: 202-260-2090
FAX: 202-260-6257
Internet: http://www.epa.gov
NOTE: Some documents are available only from: National Technical Information Services (NTIS)
5285 Port Royal Rd.
Springfield, VA 22161
Ph: 800-553-6847
Fax: 703-321-8547
Internet: www.ntis.gov
AOK 8/00
LOK 6/00

EXPANSION JOINT MANUFACTURERS ASSOCIATION (EJMA)

25 N Broadway
Tarrytown, NY 10591
Ph: 914-332-0040
Fax: 914-332-1541
Internet: www.ejma.org
AOK 8/00
LOK 6/00

FACTORY MUTUAL ENGINEERING AND RESEARCH (FM)

500 River Ridge Drive
Norwood, MA 02062
Ph: 781-440-8000
Ph: (Toll-Free): 877-364-6726
Fax: 718-440-8742
Internet: www.fmglobal.com
AOK 8/00
LOK 6/00

FEDERAL AVIATION ADMINISTRATION (FAA)

Order from:
Superintendant of Documents
U. S. Government Printing Office
Washington, DC 20402
Ph: 202-512-1800
Fax: 202-512-1356
Internet: www.gpo.gov
For free documents, order from:
Federal Aviation Administration
Dept. of Transportation
ATTN: General Services Section M-45

400 Seventh St., SW
Washington, DC 20590-0001
Ph: 202-619-8925
Fax: 202-619-8978
Internet: www.faa.gov
AOK 8/00
LOK 6/00

FEDERAL HIGHWAY ADMINISTRATION (FHWA)

Office of Highway Safety (HHS-31)
400 Seventh St., SW
Washington, DC 20590-0001
Ph: 202-366-0411
Fax: 202-366-2249
Internet: www.fhwa.dot.gov
Order from:
Government Printing Office
Superintendent of Documents
Washington, DC 20402
Ph: 202-783-3238
AOK 8/00
LOK 6/00

FEDERAL SPECIFICATIONS (FS)

Order from:
General Services Administration
Federal Supply Service Bureau
470 L'Enfant Plaza, S.W.
Washington, DC 20407
Ph: 202-619-8925
Fax: 202-619-8978
Internet: http://pub.fss.gsa.gov/

FEDERAL STANDARDS (FED-STD)

Order from:
General Services Administration
Federal Supply Service Bureau
470 E L'Enfant Plaza, S.W.
Washington, DC 20407
Ph: 202-619-8925
Fax: 202-619-8978
Internet: http://pub.fss.gsa.gov/

FORESTRY SUPPLIERS (FSUP)

205 West Rankin St.
P.O. Box 8397
Jackson, MS 39284-8397
Ph: 601-354-3565
Fax: 601-292-0165

Internet: www.forestry-suppliers.com
AOK 8/00
LOK 6/00

FOUNDATION FOR CROSS-CONNECTION CONTROL AND HYDRAULIC RESEARCH (FCCCHR)

University of South California
Kaprielian Hall 200
Los Angeles, CA 90089-2531
Ph: 213-740-2032
Fax: 213-740-8399
Internet: www.usc.edu
AOK 8/00
LOK 6/00

GEOLOGICAL SOCIETY OF AMERICA (GSA)

P.O. Box 9140
Boulder, CO 80301-9140
3300 Penrose Place
Boulder, CO 80301-1806
Ph: 800-447-2020
Fax: 303-447-1133
Internet: www.geosociety.org
AOK 8/00
LOK 6/00

GEOSYNTHETIC INSTITUTE (GSI)

475 Kedron Ave.
Folsom, PA 19033-1208
Ph: 610-522-8440
Fax: 610-522-8441
AOK 8/00
LOK 6/00

GERMANY INSTITUTE FOR STANDARDIZATION (DIN)

BURGGRAFENSTRAáE 6
POSTFACH 11 07
10787 BERLIN
GERMANY
Internet: www.gsf.de
Ph: 49-30-2601-2260
Fax: 49-30-2601-1231
AOK 8/00
LOK 6/00
Order from a United States publications service.

GLASS ASSOCIATION OF NORTH AMERICA (GANA)

2945 SW Wanamaker Drive, Suite A
Topeka, KS 66614-5321

Ph: 785-271-0208
Fax: 785-271-0166
Internet:www.glasswebsite.com
AOK 8/00
LOK 6/00

GRETAG MACBETH (GM)

Munsell Department
617 Little Britain Road
New Windsor, NY 12553-6148
Ph: 800-662-2384 or 914-565-7660
Fax: 914-565-0390
Internet: www.gretagmacbeth.com
AOK 8/00
LOK 6/00

GYPSUM ASSOCIATION (GA)

810 First St. NE, Suite 510
Washington, DC 20002
Ph: 202-289-5440
Fax: 202-289-3707
Internet: www.gypsum.org
AOK 8/00
LOK 6/00

HARDWOOD PLYWOOD & VENEER ASSOCIATION (HPVA)

1825 Michael Faraday Dr.
P.O. Box 2789
Reston, VA 20195-0789
Ph: 703-435-2900
Fax: 703-435-2537
Internet: www.hpva.org
AOK 8/00
LOK 6/00

HEAT EXCHANGE INSTITUTE (HEI)

1300 Sumner Ave
Cleveland, OH 44115-2851
Ph: 216-241-7333
Fax: 216-241-0105
Internet: www.heatexchange.org
email: hei@heatexchange.org
AOK 8/00
LOK 6/00

H.P. WHITE LABORATORY (HPW)

3114 Scarboro Rd.
Street, MD 21154
Ph: 410-838-6550

fax: 410-838-2802
Internet: www.hpwhite.com
AOK 8/00
LOK 6/00

HYDRAULIC INSTITUTE (HI)

9 Sylvan Way, Suite 180
Parsippany, NJ 07054-3802
Ph: 888-786-7744 or 973-267-9700
Fax: 973-267-9055
Internet: www.pumps.org
AOK 8/00
LOK 6/00

HYDRONICS INSTITUTE DIVISION OF GAMA (HYI)

35 Russo Pl.
P.O. Box 218
Berkeley Heights, NJ 07922-0218
Ph: 908-464-8200
Fax: 908-464-7818
Internet: www.gamanet.org
AOK 8/00
LOK 6/00

IBM CORPORATION (IBM)

Publications
P.O. Box 29570
Raleigh, NC 27626-0570
Ph: 800-879-2755, Option 1
Fax: 800-445-9269
Internet: www.elink.ibmlink.ibm.com/pbl/pbl
AOK 8/00
LOK 6/00

ILLUMINATING ENGINEERING SOCIETY OF NORTH AMERICA (IESNA)

120 Wall St., 17th Floor
New York, NY 10005-4001
Ph: 212-248-5000
Fax: 212-248-5017
Internet: www.iesna.org
AOK 8/00
LOK 6/00

INDUSTRIAL FASTENERS INSTITUTE (IFI)

1717 East 9th St., Suite 1105
Cleveland, OH 44114-2879
Ph: 216-241-1482
Fax: 216-241-5901
Internet: http://www.industrial-fasteners.org

e-mail: indfast@aol.com
AOK 8/00
LOK 6/00

INSECT SCREENING WEAVERS ASSOCIATION (ISWA)

P.O. Box 1018
Ossining, NY 10562
Ph: 914-962-9052
Fax: 914-923-3031
AOK 8/00
LOK 6/00

INSTITUTE FOR INTERCONNECTING AND PACKAGING ELECTRONIC CIRCUITS (IPC)

2215 Sanders Rd.
Northbrook, IL 60062-6135
Ph: 847-509-9700
Fax: 847-509-9798
Internet: www.ipc.org
e-mail: orderipc@ipc.org
AOK 8/00
LOK 6/00

INSTITUTE OF CLEAN AIR COMPANIES (ICAC)

1660 L St., NW, Suite 1100
Washington, DC 20036-5603
Ph: 202-457-0911
Fax: 202-331-1388
E-mail: sjenkins@icac.com
Internet: icac.com
AOK 8/00
LOK 6/00

INSTITUTE OF ELECTRICAL AND ELECTRONICS ENGINEERS (IEEE)

445 Hoes Ln, P. O. Box 1331
Piscataway, NJ 08855-1331
Ph: 732-981-0060 OR 800-701-4333
Fax: 732-981-9667
Internet: www.ieee.org
E-mail: customer.service@ieee.org
AOK 8/00
LOK 6/00

INSTITUTE OF ENVIRONMENTAL SCIENCES (IES)

940 East Northwest Highway
Mount Prospect, IL 60056
Ph: 847-255-1561
Fax: 847-255-1699
Internet: www.iest.org

INSULATED CABLE ENGINEERS ASSOCIATION (ICEA)

P.O. Box 440
South Yarmouth, MA 02664
Ph: 508-394-4424
Fax: 508-394-1194
E-mail: Internet: www.icea.net
AOK 8/00
LOK 6/00

INTERNATIONAL APPROVAL SERVICES (IAS)

8501 East Pleasant Valley Rd.
Cleveland, OH 44131
Ph: 216-524-4990
Fax: 216-328-8118
Internet: www.iasapprovals.org
AOK 8/00
LOK 6/00

INTERNATIONAL ASSOCIATION OF PLUMBING AND MECHANICAL OFFICIALS (IAPMO)

20001 Walnut Dr., So.
Walnut, CA 91789-2825
Ph: 909-595-8449
Fax: 909-594-3690
Fax for Stds: 909-594-5265
Internet: www.iapmo.org
AOK 8/00
LOK 6/00

INTERNATIONAL CONFERENCE OF BUILDING OFFICIALS (ICBO)

5360 Workman Mill Rd.
Whittier, CA 90601-2298
Ph: 800-284-4406
Ph: 310-699-0541
Fax: 310-692-3853
Internet: icbo.org
AOK 8/00
LOK 6/00

INTERNATIONAL ELECTROTECHNICAL COMMISSION (IEC)

3, rue de Varembe, Case Postale 131
CH-1211 Geneva 20, Switzerland
Ph: 41-22-919-0211
Fax: 41-22-919-0300
Internet: http://www.iec.ch
e-mail: custserv@iec.ch
AOK 8/00
LOK 6/00

INTERNATIONAL INSTITUTE OF AMMONIA REFRIGERATION (IIAR)

1110 N. Glebe Rd., Suite 250
Arlington, VA 22201
Ph: 703-312-4200
Fax: 703-312-0065
Internet: www.iiar.org
e-mail: iiar@iiar.org
AOK 8/00
LOK 6/00

INTERNATIONAL MUNICIPAL SIGNAL ASSOCIATION (IMSA)

P.O. Box 539
165 East Union St.
Newark, NY 14513-0539
Ph: 315-331-2182
Ph: 800-723-4672
Fax: 315-331-8205
Internet: www.imsasafety.org
AOK 8/00
LOK 6/00

INTERNATIONAL ORGANIZATION FOR STANDARDIZATION (ISO)

1, rue de Varembe'
Case Postale 56
CH-1211 Geneve 20
Switzerland
Ph: 41-22-749-0111
Fax: 41-22-733-3430
Internet: www.iso.ch
e-mail: central@iso.ch
AOK 8/00
LOK 6/00

INTERNATIONAL SLURRY SURFACING ASSOCIATION (ISSA)

1200 Nineteenth St., NW, Suite 300
Washington, DC 20036-2422
Ph: 202-857-1160
Fax: 202-223-4579
Internet: www.slurry.org
e-mail> issa@dc.sba.com
AOK 8/00
LOK 6/00

INTERNATIONAL TELECOMMUNICATION UNION (ITU)

Order from:
U.S. Dept of Commerce
National Technical Information Service
5285 Port Royal Road.

Springfield, VA 22161
Ph: 703605-6040
FAX: 703-605-6887
Internet: www.ntis.gov
For documents not avail from Dept of Commerce:
E-Mail: sales@itu.ch
Fax: 41.22.730.5194
Internet: www.itu.org
AOK 8/00
LOK 6/00

IRON & STEEL SOCIETY (ISS)

186 Thornhill Rd
Warrendale, PA 15086-7528
Ph: 724-776-1353 Ext 1
Fax: 724-776-0430
E-Mail: custserv@issource.org
Internet: www.issource.org
AOK 8/00
LOK 6/00

ISA (ISA)

67 Alexander Drive
P.O. Box 12277
Research Triangle Park, NC 27709
Ph: 919-549-8411
Fax: 919-549-8288
e-mail: ISA@isa.org
Internet: http://www.isa.org
AOK 8/00
LOK 6/00

KITCHEN CABINET MANUFACTURERS ASSOCIATION (KCMA)

1899 Preston White Dr.
Reston, VA 20191-5435
Ph: 703-264-1690
Fax: 703-620-6530
Internet: www.kcma.org
AOK 8/00
LOK 6/00

MANUFACTURERS STANDARDIZATION SOCIETY OF THE VALVE AND FITTINGS INDUSTRY (MSS)

127 Park St., NE
Vienna, VA 22180-4602
Ph: 703-281-6613
Fax: 703-281-6671
Internet: www.mss-hq.com
e-mail: info@mss-hq.com
AOK 8/00

LOK 6/00

MAPLE FLOORING MANUFACTURERS ASSOCIATION (MFMA)

60 Revere Dr., Suite 500
Northbrook, IL 60062
Ph: 847-480-9138
Fax: 847-480-9282
Internet: www.maplefloor.org
AOK 8/00
LOK 6/00

MARBLE INSTITUTE OF AMERICA (MIA)

30 Eden Alley, Suite 301
Columbus, OH 43215
Ph: 614-228-6194
Fax: 614-461-1497
Internet: www.marble-institute.com
e-mail: miaadmin@marble-institute.com
AOK 8/00
LOK 6/00

MATERIAL HANDLING INDUSTRY (MHI)

8720 Red Oak Blvd., Suite 201
Charlotte, NC 28217-3992
Ph: 800-345-1815 or 704-676-1190
Fax: 704-676-1199
Internet: www.mhi.org
AOK 8/00
LOK 6/00

METAL BUILDING MANUFACTURERS ASSOCIATION (MBMA)

1300 Sumner Ave.
Cleveland, OH 44115-2851
Ph: 216-241-7333
Fax: 216-241-0105
Internet: www.mbma.com
e-mail: mbma@mbma.com
AOK 8/00
LOK 6/00

MIDWEST INSULATION CONTRACTORS ASSOCIATION (MICA)

2017 So. 139th Cir.
Omaha, NE 68144
Ph: 402-342-3463
Fax: 402-330-9702
Internet: www.micainsulation.org
e-mail: info@micainsulation.org
AOK 8/00
LOK 6/00

MILITARY HANDBOOKS (MIL-HDBK)

Order from:
Standardization Documents Order Desk
Bldg 4D
700 Robbins AV
Philadelphia, PA 19111-5094
Ph: 215-697-5147
Fax: 215-697-5148
Internet: www.dodssp.daps.mil
AOK 8/00
LOK 6/00

MILITARY SPECIFICATIONS (MS)

Order from:
Standardization Documents Order Desk
Building 4, Section D
700 Robbins Ave.
Philadelphia, PA 19111-5094
Ph: 215-697-5147
Fax: 215-697-5148
Internet: www.dodssp.daps.mil
AOK 8/00
LOK 6/00

MILITARY STANDARDS (MIL-STD)

Order from:
Standardization Documents Order Desk
Building 4, Section D
700 Robbins Ave.
Philadelphia, PA 19111-5094
Ph: 215-697-2179
Fax: 215-697-2978
Internet: www.dodssp.daps.mil
AOK 8/00
LOK 6/00

NACE INTERNATIONAL (NACE)

1440 South Creek Drive
Houston, TX 77084-4906
Ph: 281-228-6200
Fax: 281-228-6300
Internet: www.nace.org
AOK 8/00
LOK 6/00

NATIONAL ASSOCIATION OF ARCHITECTURAL METAL MANUFACTURERS (NAAMM)

8 S. Michigan Ave, Suite 1000
Chicago, IL 60603

Ph: 312-782-4951
Fax: 312-332-0706
Internet: www.naamm.org
e-mail> naamm@gss.net
AOK 8/00
LOK 6/00

NATIONAL ASSOCIATION OF PLUMBING-HEATING-COOLING CONTRACTORS (NAPHCC)

180 S. Washington Street
P.O. Box 6808
Falls Church, VA 22040
Ph: 800-533-7694
Fax: 703-237-7442
Internet: www.naphcc.org
AOK 8/00
LOK 6/00

NATIONAL BOARD OF BOILER AND PRESSURE VESSEL INSPECTORS (NBBPVI)

1055 Crupper Ave.
Columbus, OH 43229-1183
Ph: 614-888-2463
Fax: 614-847-1147
Internet: www.nationalboard.org
e-mail: orders@nationalboard.org
LOK 6/00

NATIONAL CABLE TELEVISION ASSOCIATION (NCTA)

1724 Massachusetts Ave. NW
Washington, DC 20036-1969
Ph: 202-775-3629
Fax: 202-775-1055
Internet: www.ncta.com
AOK 8/00
LOK 6/00

NATIONAL COUNCIL ON RADIATION PROTECTION AND MEASUREMENTS (NCRP)

7910 Woodmont Ave., Suite 800
Bethesda, MD 20814-3095
Ph: 800-229-2652
Ph. 301-657-2652
Fax: 301-907-8768
Internet: www.ncrp.com
AOK 8/00
LOK 6/00

NATIONAL DRILLING ASSOCIATION (NDA)

6089 Frantz Rd., Suite 101
Dublin, OH 43017

Ph: 614-798-8080
Fax: 614-798-2255
email: info@nda4U.com
Internet: http://www.nda4U.com
AOK 8/00
LOK 6/00

NATIONAL ELECTRICAL MANUFACTURERS ASSOCIATION (NEMA)

1300 N. 17th St., Suite 1847
Rosslyn, VA 22209
Ph: 703-841-3200
Fax: 703-841-3300
Internet: http//www.nema.org/
AOK 8/00
LOK 6/00

NATIONAL ENVIRONMENTAL BALANCING BUREAU (NEBB)

8575 Grovemont Circle
Gaithersburg, MD 20877-4121
Ph: 301-977-3698
Fax: 301-977-9589
Internet: www.nebb.org
AOK 8/00
LOK 6/00

NATIONAL FIRE PROTECTION ASSOCIATION (NFPA)

1 Batterymarch Park
P.O. Box 9101
Quincy, MA 02269-9101
Ph: 617-770-3000
Fax: 617-770-0700
Internet: www.nfpa.org
NOTE: The complete set of 1997 NFPA National Fire Codes (13 Vol.) is available for $835.00.
AOK 8/00
LOK 8/00

NATIONAL FLUID POWER ASSOCIATION (NFLPA)

3333 N. Mayfair Rd.
Milwaukee, WI 53222-3219
Ph: 414-778-3344
Fax: 414-778-3361
Internet: www.nfpa.com
E-mail: nfpa@nfpa.com
AOK 8/00
LOK 6/00

NATIONAL HARDWOOD LUMBER ASSOCIATION (NHLA)

P.O. Box 34518

Memphis, TN 38184-0518
Ph: 901-377-1818
Fax: 901-382-6419
e-mail: nhla@natlhardwood.org
Internet: natlhardwood.org
AOK 8/00
LOK 6/00

NATIONAL INSTITUTE FOR CERTIFICATION IN ENGINEERING TECHNOLOGIES (NICET)

1420 King Street
Alexandria, VA 22314-2794
Ph: 888-476-4238
Internet: www.nicet.org
AOK 8/00
LOK 6/00

NATIONAL INSTITUTE FOR OCCUPATIONAL SAFETY AND HEALTH (NIOSH)

Mail Stop C-13
4676 Columbia Parkway
Cincinnati, OH 45226-1998
Ph: 800-356-4676
Internet: http://www.cdc.gov/niosh/homepage.html
To order pubs for which a fee is charged, order from:
Superintendent of Documents
Government Printing Office
Washington, DC 20402-9325
Ph: 202-512-1800
Fax: 202-512-2250
AOK 8/00
LOK 6/00

NATIONAL INSTITUTE OF JUSTICE (NIJ)

National Law Enforcement and Corrections Technology Center
2277 Research Blvd. - Mailstop 1E
Rockville, MD 20850
Ph: 800-248-2742 or 301-519-5060
Fax: 301-519-5149
Internet: www.nlectc.org
e-mail: asknlectc@nlectc.org
AOK 8/00
LOK 6/00

NATIONAL INSTITUTE OF STANDARDS AND TECHNOLOGY (NIST)

Department of Commerce
Gaithersburg, MD 20899-0001
Ph: 301-975-4025
Fax: 301-926-1630
Order Publications From:
Superintendent of Documents

U.S. Government Printing Office (GPO)
Washington, DC 20402
Ph: 202-512-1800
Fax: 202-512-2250
or
National Technical Information Services (NTIS)
5285 Port Royal Rd.
Springfield, VA 22161
Ph: 800-553-6847
Fax: 703-321-8547
Internet: www.gov/ntis.gov
AOK 8/00
LOK 6/00

NATIONAL OAK FLOORING MANUFACTURERS ASSOCIATION (NOFMA)

P.O. Box 3009
Memphis, TN 38173-0009
Ph: 901-526-5016
Fax: 901-526-7022
Internet: www.nofma.org
AOK 8/00
LOK 6/00

NATIONAL READY-MIXED CONCRETE ASSOCIATION (NRMCA)

900 Spring St.
Silver Spring, MD 20910
Ph: 301-587-1400
Fax: 301-585-4219
Internet: www.nrmca.org
AOK 8/00
LOK 6/00

NATIONAL ROOFING CONTRACTORS ASSOCIATION (NRCA)

10255 W. higgins Rd., Suite 600
Rosemont, IL 60018
Ph: 847-299-9070
Fax: 847-299-1183
Internet: www.nrca.net
AOK 8/00
LOK 6/00

NATIONAL TERRAZZO & MOSAIC ASSOCIATION (NTMA)

110 East Market St., Suite 200 A
Leesburg, Virginia 20176
Ph: 703-779-1022 or 800-323-9736
Fax: 703-779-1026
Internet: www.ntma.com
e-mail: info@ntma.com
AOK 8/00
LOK 6/00

NATIONAL WOOD WINDOW & DOOR ASSOCIATION (NWWDA)

1400 East Touhy Ave., Suite 470
Des Plaines, IL 60018
Ph: 847-299-5200 800-223-2301
Fax: 708-299-1286
Internet: wwwnwwda.org
e-mail: admin@wdma.com
AOK 8/00
LOK 6/00

NAVAL FACILITIES ENGINEERING COMMAND (NAVFAC)

1510 Gilbert St.
Norfolk, VA 23511-2699
Ph: 757-322-4200
Fax: 757-322-4416
Internet: www.efdlant.navfac.navy.mil
AOK 8/00
LOK 6/00

NAVAL FACILITIES ENGINEERING SERVICE CENTER (NFESC)

1100 23rd Avenue
Port Hueneme, CA 93043-4370
Ph: 805-982-4980
Internet: www.nfesc.navy.mil
AOK 8/00
LOK 6/00

NORTH AMERICAN INSULATION MANUFACTURERS ASSOCIATION (NAIMA)

44 Canal Center Plaza, Suite 310
Alexandria, VA 22314
Ph: 703-684-0084
Fax: 703-684-0427
Internet: www.naima.org
e-mail: insulation@naima.org
AOK 8/00
LOK 6/00

NORTHEASTERN LUMBER MANUFACTURERS ASSOCIATION (NELMA)

272 Tuttle Road
P.O. Box 87A
Cumberland Center, ME 04021
Ph: 207-829-6901
Fax: 207-829-4293
Internet: www.nelma.org
e-mail: nelma@javanet.com
AOK 8/00
LOK 6/00

NORTHEAST REGIONAL AGRICULTURAL ENGINEERING SERVICE (NRAES)

Cooperative Extension
152 Riley-Robb Hall
Ithaca, NY 14853-5701
Ph: 607-255-7654
Fax: 607-254-8770
Internet: www.nraes.org
E-mail: nraes@cornell.edu
AOK 8/00
LOK 6/00

NSF INTERNATIONAL (NSF)

ATTN: Publications
789 Dixboro Rd.
P.O. Box 130140
Ann Arbor, MI 48113-0140
Ph: 734-769-8010
Fax: 734-769-0109
Toll Free: 800-NSF-MARK
Internet: www.nsf.org
AOK 8/00
LOK 6/00

PIPE FABRICATION INSTITUTE (PFI)

PMB 323
611 Pennsylvania Ave. SE
Washington, DC 20003
Ph: 514-634-3434
Fax: 514-634-9736
Internet: www.pfi-institute.org
e-mail: pfi@pfi-institute.org
AOK 8/00
LOK 6/00

PLASTIC PIPE AND FITTINGS ASSOCIATION (PPFA)

800 Roosevelt Rd., Bldg C, Suite 20
Glen Ellyn, IL 60137
Ph: 630-858-6540
Fax: 630-790-3095
Internet: www.ppfahome.org
AOK 8/00
LOK 6/00

PLASTICS PIPE INSTITUTE (PPI)

1825 Connecticut Ave. NW
Washington, D. C. 20009
Ph: 202-462-9607
Fax: 202-462-9779
Internet: www.plasticpipe.org

AOK 8/00
LOK 6/00

PLUMBING AND DRAINAGE INSTITUTE (PDI)

45 Bristol Dr.
South Easton, MA 02375
Ph: 508-230-3516 or 800-589-8956
Fax: 508-230-3529
Internet: www.pdionline.org
E-Mail: info@pdionline.org
AOK 8/00
LOK 6/00

PLUMBING AND PIPING INDUSTRY COUNCIL (PPIC)

9450 SW Commerce Circle, Suite 310
wilsonville, OR 97070-9626
Ph: 503-682-7919

PORCELAIN ENAMEL INSTITUTE (PEI)

P.O.Box 158541
4004 Hillsboro Pike, Suite 224B
Nashville, TN 37215
Ph: 615-385-5357
Fax: 615-385-5463
Internet: www.porcelainenamel.com
e-mail: penamel@aol.com
AOK 8/00
LOK 6/00

PRECAST/PRESTRESSED CONCRETE INSTITUTE (PCI)

209 West Jackson Blvd.
Chicago, IL 60606-6938
Ph: 312-786-0300
Fax: 312-786-0353
Internet: www.pci.org
e-mail: info@pci.org
AOK 8/00
LOK 6/00

RUBBER MANUFACTURERS ASSOCIATION (RMA)

1400 K St., NW, Suite 900
Washington, DC 20005
Ph: 202-682-4800
Fax: 202-682-4854
Internet: www.rma.org
Order Publications from:
The Mail Room

P. O. Box 3147
Medina, OH 44258
Ph: 800-325-5095 EXT 242 or 330-723-2978
Fax: 330-725-0576
AOK 8/00
LOK 6/00

RURAL UTILITIES SERVICE (RUS)

ATTN: Publications
14th and Independence Ave., SW, Room 4028-S
Washington, DC 20250
Ph: 202-720-8674 OR 202-720-8679
Fax: 202-205-3654
Internet: www.usda.gov/rus

SCREEN MANUFACTURERS ASSOCIATION (SMA)

2850 South Ocean Boulevard, Suite 311
Palm Beach, FL 33480-5535
Ph: 561-533-0991
Fax: 561-533-7466
e-mail: fscottfitzgerald@compuserve.com
Internet: www.eren.doe.gov
AOK 8/00
LOK 6/00

SHEET METAL & AIR CONDITIONING CONTRACTORS' NATIONAL ASSOCIATION (SMACNA)

4201 Lafayette Center Dr.,
Chantilly, VA 20151-1209
Ph: 703-803-2980
Fax: 703-803-3732
Internet: http://www.smacna.org
e-mail: info@smacna.org
AOK 8/00
LOK 6/00

SINGLE PLY ROOFING INSTITUTE (SPRI)

200 Reservoir St., Suite 309A
Needham, MA 02494
Ph: 781-444-0242
Fax: 781-444-6111
Internet: www.spri.org
e-mail: spri@spri.org
AOK 8/00
LOK 6/00

SOCIETY OF AUTOMOTIVE ENGINEERS (SAE)

400 Commonwealth Dr.

Warrendale, PA 15096-0001
Ph: 724-776-4841
Fax: 724-776-5760
Internet: http://www.sae.org
e-mail: publications@sae.org
AOK 8/00
LOK 6/00

SOUTHERN BUILDING CODE CONGRESS INTERNATIONAL (SBCCI)

900 Montclair Road
Birmingham, AL 35213-1206
Ph: 205-591-1853
Fax: 205-591-0775
Internet: www.sbcci.org
AOK 8/00
LOK 6/00

SOUTHERN CYPRESS MANUFACTURERS ASSOCIATION (SCMA)

400 Penn Center Boulevard, Suite 530
Pittsburgh, PA 15235
Ph: 412-829-0770
Fax: 412-829-0844
Internet: www.cypressinfo.org
AOK 8/00
LOK 6/00

SOUTHERN PINE INSPECTION BUREAU (SPIB)

4709 Scenic Highway
Pensacola, FL 32504-9094
Ph: 850-434-2611
Fax: 850-433-5594
e-mail: spib@spib.org
Internet: www.spib.org
AOK 8/00
LOK 6/00

THE SOCIETY FOR PROTECTIVE COATINGS (SSPC)

40 24th Street, 6th Floor
Pittsburgh, PA 15222-4656
Ph: 412-281-2331
Fax: 412-281-9992
Internet: www.sspc.org
AOK 8/00
LOK 6/00

NOTE: SSPC documents, except as noted otherwise, are available only as a part of the 1995 Steel Structures Painting Manual, 7th Edition @ $115.00.

STEEL DECK INSTITUTE (SDI)

P.O. Box 25
Fox River Grove, IL 60021-0025
Ph: 847-462-1930
Fax: 847-462-1940
Internet: http://www.sdi.org
e-mail: Steve@sdi.org
AOK 8/00
LOK 6/00

STEEL DOOR INSTITUTE (SDOI)

30200 Detroit Rd.
Cleveland, OH 44145-1967
Ph: 440-899-0010
Fax: 440-892-1404
Internet: www.steeldoor.org
AOK 8/00
LOK 6/00

STEEL JOIST INSTITUTE (SJI)

3127 Tenth Ave., North Ext.
Myrtle Beach, SC 29577-6760
Ph: 843-626-1995
Fax: 843-626-5565
Internet: www.steeljoist.org
AOK 8/00
LOK 6/00

STEEL TANK INSTITUTE (STI)

570 Oakwood Rd.
Lake Zurich, IL 60047
Ph: 847-438-8265
Fax: 847-438-8766
Internet: www.steeltank.com
AOK 8/00
LOK 6/00

STEEL WINDOW INSTITUTE (SWI)

1300 Sumner Ave.
Cleveland, OH 44115-2851
Ph: 216-241-7333
Fax: 216-241-0105
Internet: www.steelwindows.com
AOK 8/00
LOK 6/00

TILE COUNCIL OF AMERICA (TCA)

100 Clemson Research Blvd

Anderson, SC 29625
Ph: 864-646-8453
FAX: 864-646-2821
Internet: www.tileusa.com
e-mail: literature@tileusa.com
AOK 8/00
LOK 6/00

TRUSS PLATE INSTITUTE (TPI)

583 D'Onofrio Dr., Suite 200
Madison, WI 53719
Ph: 608-833-5900
Fax: 608-833-4360
AOK 8/00
LOK 6/00

TUBULAR EXCHANGE MANUFACTURERS ASSOCIATION (TEMA)

25 N. Broadway
Tarrytown, NY 10591
Ph: 914-332-0040
Fax: 914-332-1541
Internet: www.tema.org
AOK 8/00
LOK 6/00

UNDERWRITERS LABORATORIES (UL)

333 Pfingsten Rd.
Northbrook, IL 60062-2096
Ph: 847-272-8800
Fax: 847-272-8129
Internet: http://www.ul.com/
e-mail: northbrook@us.ul.com
AOK 8/00
LOK 6/00

Note: First price is for the standard only. Second price is for the standard including the Revision Subscription Service.

UNI-BELL PVC PIPE ASSOCIATION (UBPPA)

2655 Villa Creek Dr., Suite 155
Dallas, TX 75234
Ph: 214-243-3902
Fax: 214-243-3907
Internet: www.uni-bell.org
e-mail: info@uni-bell.org
AOK 8/00
LOK 6/00

U. S. ARMY ENVIORNMENTAL HYGIENE AGENCY (USAEHA)

Waste Disposal Engineering Division
Aberdeen Proving Ground, MD 21010-5422
Ph: 410-436-3652

WATER ENVIRONMENT FEDERATION (WEF)

601 Wythe St.
Alexandria, VA 22314-1994
Ph: 703-684-2452
Fax: 703-684-2492
Internet: www.wef.org
AOK 8/00
LOK 6/00

WATER QUALITY ASSOCIATION (WQA)

4151 Naperville Rd.
Lisle, IL 60532
Ph: 630-505-0160
Fax: 630-505-9637
Internet: www.wqa.org
e-mail: info@mail.wqa.org
AOK 8/00
LOK 6/00

WEST COAST LUMBER INSPECTION BUREAU (WCLIB)

P.O. Box 23145
Portland, OR 97281
Ph: 503-639-0651
Fax: 503-684-8928
internet: www.wclib.org
e-mail: info@wclib.org
AOK 8/00
LOK 6/00

WESTERN WOOD PRESERVERS INSTITUTE (WWPI)

7017 N.E. Highway 99 # 108
Vancover, WA 98665
Ph: 360-693-9958
Fax: 360-693-9967
Internet: www.awpi.org/wwpi
e-mail: wwpi@teleport.com
AOK 8/00
LOK 6/00

WESTERN WOOD PRODUCTS ASSOCIATION (WWPA)

Yeon Bldg.
522 SW 5th Ave.
Suite 500
Portland, OR 97204-2122

Ph: 503-224-3930
Fax: 503-224-3934
Internet: www.wwpa.org
e-mail: info@wwpa.org
AOK 8/00
LOK 6/00

WOOD MOULDING AND MILLWORK PRODUCERS ASSOCIATION (WMMPA)

507 First Street
Woodland, CA 95695
Ph: 916-661-9591
Fax: 916-661-9586
Internet: www.wmmpa.com
AOK 8/00
LOK 6/00

-- End of Section --

SECTION TABLE OF CONTENTS

DIVISION 01 - GENERAL REQUIREMENTS

SECTION 01330

SUBMITTAL PROCEDURES

09/00

PART 1 GENERAL

1.1 SUBMITTAL IDENTIFICATION
1.2 SUBMITTAL CLASSIFICATION
1.2.1 Government Approved
1.2.2 Information Only
1.3 APPROVED SUBMITTALS
1.4 DISAPPROVED SUBMITTALS
1.5 WITHHOLDING OF PAYMENT

PART 2 PRODUCTS (Not used)

PART 3 EXECUTION

3.1 GENERAL
3.2 SUBMITTAL REGISTER
3.3 SCHEDULING
3.4 TRANSMITTAL FORM (ENG FORM 4025)
3.5 SUBMITTAL PROCEDURE
3.5.1 Procedures
3.5.2 Deviations
3.6 CONTROL OF SUBMITTALS
3.7 GOVERNMENT APPROVED SUBMITTALS
3.8 INFORMATION ONLY SUBMITTALS
3.9 STAMPS

-- End of Section Table of Contents --

CEGS-01330/S (September 2000)

SECTION 01330

SUBMITTAL PROCEDURES
09/00

PART 1 GENERAL
1.1 SUBMITTAL IDENTIFICATION

Submittals required are identified by SD numbers and titles as follows:

SD-01 Preconstruction Submittals

SD-02 Shop Drawings

SD-03 Product Data

SD-04 Samples

SD-05 Design Data

SD-06 Test Reports

SD-07 Certificates

SD-08 Manufacturer's Instructions

SD-09 Manufacturer's Field Reports

SD-10 Operation and Maintenance Data

SD-11 Closeout Submittals

1.2 SUBMITTAL CLASSIFICATION

Submittals are classified as follows:

1.2.1 Government Approved

Government approval is required for extensions of design, critical materials, deviations, equipment whose compatibility with the entire system must be checked, and other items as designated by the Contracting Officer. Within the terms of the Contract Clause entitled "Specifications and Drawings for Construction," they are considered to be "shop drawings."

1.2.2 Information Only

All submittals not requiring Government approval will be for information only. They are not considered to be "shop drawings" within the terms of the Contract Clause referred to above.

1.3 APPROVED SUBMITTALS

The Contracting Officer's approval of submittals shall not be construed as a complete check, but will indicate only that the general method of construction, materials, detailing and other information are satisfactory. Approval will not relieve the Contractor of the responsibility for any error which may exist, as the Contractor under the Contractor Quality Control (CQC) requirements of this contract is responsible for dimensions, the design of adequate connections and details, and the satisfactory construction of all work. After submittals have been approved by the Contracting Officer, no resubmittal for the purpose of substituting materials or equipment will be considered unless accompanied by an explanation of why a substitution is necessary.

1.4 DISAPPROVED SUBMITTALS

The Contractor shall make all corrections required by the Contracting Officer and promptly furnish a corrected submittal in the form and number of copies specified for the initial submittal. If the Contractor considers any correction indicated on the submittals to constitute a change to the contract, a notice in accordance with the Contract Clause "Changes" shall be given promptly to the Contracting Officer.

1.5 WITHHOLDING OF PAYMENT

Payment for materials incorporated in the work will not be made if required approvals have not been obtained.

PART 2 PRODUCTS (Not used)

PART 3 EXECUTION

3.1 GENERAL

The Contractor shall make submittals as required by the specifications. The Contracting Officer may request submittals in addition to those specified when deemed necessary to adequately describe the work covered in the respective sections. Units of weights and measures used on all submittals shall be the same as those used in the contract drawings. Each submittal shall be complete and in sufficient detail to allow ready determination of compliance with contract requirements. Prior to submittal, all items shall be checked and approved by the Contractor's Quality Control (CQC) System Manager and each item shall be stamped, signed, and dated by the CQC System Manager indicating action taken. Proposed deviations from the contract requirements shall be clearly identified. Submittals shall include items such as: Contractor's, manufacturer's, or fabricator's drawings; descriptive literature including (but not limited to) catalog cuts, diagrams, operating charts or curves; test reports; test cylinders; samples; O&M manuals (including parts list); certifications; warranties; and other such required submittals. Submittals requiring Government approval shall be scheduled and made prior to the acquisition of the material or equipment covered thereby. Samples remaining upon completion of the work shall be picked up and disposed of in

accordance with manufacturer's Material Safety Data Sheets (MSDS) and in compliance with existing laws and regulations.

3.2 SUBMITTAL REGISTER

At the end of this section is a submittal register showing items of equipment and materials for which submittals are required by the specifications; this list may not be all inclusive and additional submittals may be required. The Contractor shall maintain a submittal register for the project.

3.3 SCHEDULING

Submittals covering component items forming a system or items that are interrelated shall be scheduled to be coordinated and submitted concurrently. Certifications to be submitted with the pertinent drawings shall be so scheduled. Adequate time (a minimum of 30 calendar days exclusive of mailing time) shall be allowed and shown on the register for review and approval. No delay damages or time extensions will be allowed for time lost in late submittals. An additional 10 calendar days shall be allowed and shown on the register for review and approval of submittals for food service equipment and refrigeration and HVAC control systems.

3.4 TRANSMITTAL FORM (ENG FORM 4025)

The sample transmittal form (ENG Form 4025) included in Attachment 1 to Section 00800 shall be used for submitting both Government approved and information only submittals in accordance with the instructions on the reverse side of the form. These forms will be furnished to the Contractor. This form shall be properly completed by filling out all the heading blank spaces and identifying each item submitted. Special care shall be exercised to ensure proper listing of the specification paragraph and/or sheet number of the contract drawings pertinent to the data submitted for each item.

3.5 SUBMITTAL PROCEDURE

Submittals shall be made as follows:

3.5.1 Procedures

The Contractor shall be responsible for the scheduling and control of all submittals. The Contractor is responsible for confirming that the submittal register includes all submittals required by the contract documents.

In addition to those items listed on ENG Form 4288, the Contractor will furnish submittals for any deviation from the plans or specifications. The scheduled need dates must be recorded on the document for each item for control purposes and critical items must be tied to the Contractor's approved schedule where applicable.

The Contractor will submit to the Contracting Officer for approval a minimum of five copies of all G/RE (Resident/Area Office Review), G/ED

(Engineering Division Review) or G/AE (Architect-Engineer Review) level submittals. Three copies of all FIO level submittals will be provided. The number of copies of submittals specified in this portion of the contract shall be complied with in lieu of four copies as specified by FAR 52.236-21.

For those contracts requiring Network Analysis System (NAS), the Contractor will schedule on the NAS critical items of equipment submittals and procurement activities which will, or have the potential to, significantly impact project completion. The inclusion or exclusion of critical items shall be subject to the approval of the Contracting Officer.

Where ENG Form 4025 must be submitted prior to approval of the Construction Progress Schedule, the Contractor shall submit an initial annotated ENG Form 4288 upon which dates for submittal, approval and delivery of procurement items shall be included for the first 60 days of the work. Upon approval of the Construction Progress Schedule, or no later than 60 days after Notice to Proceed, the Contractor shall submit final annotated copies of ENG Form 4288. Dates shall be coordinated with the approved Construction Progress Schedule to logically interface with the sequence of construction. Critical item numbers will be shown on the listing if NAS is required.

Furnishing the schedule shall not be interpreted as relieving the Contractor of his obligation to comply with all the specification requirements for the items on the schedule. Contractor's Quality Control representative shall review the listing at least every 30 days and take appropriate action to maintain an effective system. The Contractor shall furnish a list each 30 days of all submittals on which either Government's or Contractor's action is past due. He shall also furnish revised due dates in those cases when the original submittal schedule is no longer realistic. This monthly list of delayed items shall also be annotated by the Contractor to show what corrective action he is taking with regard to slippages in submittal schedule which are attributable to actions by him, his subcontractors, or suppliers.

The Contractor shall provide a complete updated submittal register indicating the current status of all submittals when requested by the Contracting Officer in order to assure himself the schedule is being maintained.

The Contractor shall certify that each submittal is correct and in strict conformance with the contract drawings and specifications. All submittals not subject to the approval of the Contracting Officer will be submitted for information purposes only.

No Corps of Engineers action will be required prior to incorporating these items into the work, but the submittal shall be furnished to the Area/Resident Engineer not less than 2 weeks prior to procurement of Contractor certified material, equipment, etc.

These Contractor approved submittals will be used to verify that material received and used in the job is the same as that described and approved and will be used as record copies. All samples of materials submitted as

required by these specifications shall be properly identified and labeled for ready identification, and upon being certified by the Contractor and reviewed by the Contracting Officer, shall be stored at the site of the work for job site use until all work has been completed and accepted by the Contracting Officer. Delegation of this approval authority to Contractor Quality Control does not relieve the Contractor from the obligation to conform to any contract requirement and will not prevent the Contracting Officer from requiring removal and replacement of construction not in contract conformance; nor does it relieve the Contractor from the requirement to furnish "samples" for testing by the Government Laboratory or check testing by the Government in those instances where the technical specifications so prescribe.

Contractor certified drawings will be subject to quality assurance review by the Government at any time during the duration of the contract. No adjustment for time or money will be allowed for corrections required as a result of noncompliance with plans and specifications.

Submittals Requiring Government Approval (G/ED Level, G/RE Level or G/AE level). Where the review authority is designated to the Government, the Contractor is required to sign the certification on ENG Form 4025 in the box beside the remarks block in Section I. The Government will code the items in block h and sign the approval action block in Section II as the approving authority.

Operating and Maintenance Instructions. Six complete sets of instructions containing the manufacturer's operating and maintenance instructions for each piece of equipment shall be furnished. Each set shall be permanently bound and shall have a hard cover. One complete set shall be furnished at the time test procedures are submitted. Remaining sets shall be furnished before the contract is completed. The following identification shall be inscribed on the covers: The words "OPERATING AND MAINTENANCE INSTRUCTIONS," name and location of the facility, name of the Contractor, and contract number. Fly sheets shall be placed before instructions covering each subject. Instruction sheets shall be approximately 8-1/2 by 11 inches, with large sheets of drawings folded in. Instructions shall include but are not limited to:

(1) System layout showing piping, valves and controls;

(2) Approved wiring and control diagrams;

(3) A control sequence describing startup, operation and shutdown;

(4) Operating and maintenance instructions for each piece of equipment, including lubrication instructions and troubleshooting guide; and

(5) Manufacturer's bulletins, cuts and descriptive data; parts lists and recommended parts.

3.5.2 Deviations

For submittals which include proposed deviations requested by the Contractor, the column "variation" of ENG Form 4025 shall be checked. The

Contractor shall set forth in writing the reason for any deviations and annotate such deviations on the submittal. The Government reserves the right to rescind inadvertent approval of submittals containing unnoted deviations.

3.6 CONTROL OF SUBMITTALS

The Contractor shall carefully control his procurement operations to ensure that each individual submittal is made on or before the Contractor scheduled submittal date shown on the approved "Submittal Register."

3.7 GOVERNMENT APPROVED SUBMITTALS

Upon completion of review of submittals requiring Government approval, the submittals will be identified as having received approval by being so stamped and dated. Four copies of the submittal will be retained by the Contracting Officer and one copy of the submittal will be returned to the Contractor.

3.8 INFORMATION ONLY SUBMITTALS

Normally submittals for information only will not be returned. Approval of the Contracting Officer is not required on information only submittals. The Government reserves the right to require the Contractor to resubmit any item found not to comply with the contract. This does not relieve the Contractor from the obligation to furnish material conforming to the plans and specifications; will not prevent the Contracting Officer from requiring removal and replacement of nonconforming material incorporated in the work; and does not relieve the Contractor of the requirement to furnish samples for testing by the Government laboratory or for check testing by the Government in those instances where the technical specifications so prescribe.

3.9 STAMPS

Stamps used by the Contractor on the submittal data to certify that the submittal meets contract requirements shall be similar to the following:

CONTRACTOR

(Firm Name)

_____ Approved

_____ Approved with corrections as noted on submittal data and/or attached sheets(s).

SIGNATURE: _____

TITLE: _____

DATE: _____

-- End of Section --

SUBMITTAL REGISTER

CONTRACT NO.

TITLE AND LOCATION

OPS, MAINTENANCE AND STORAGE FACILITIES, SEYMOUR JOHNSON AFB, NC

CONTRACTOR

ACTIVITY NO	TRANSMITTAL NO	SPEC SECT	DESCRIPTION ITEM SUBMITTED	PARAGRAPH #	CLASSIFICATION	GOVT OR A/E REVWR	CONTRACTOR: SCHEDULE DATES			CONTRACTOR ACTION			APPROVING AUTHORITY					
							SUBMIT	APPROVAL NEEDED BY	MATERIAL NEEDED BY	ACTION CODE	DATE OF ACTION	DATE FWD TO APPR AUTH/ DATE RCD FROM CONTR	DATE FWD TO OTHER REVIEWER	DATE RCD FROM OTH REVIEWER	ACTION CODE	DATE OF ACTION	MAILED TO CONTR/ DATE RCD FRM APPR AUTH	REMARKS
(a)	(b)	(c)	(d)	(e)	(f)		(g)	(h)	(i)	(j)	(k)	(l)	(m)	(n)	(o)	(p)	(q)	(r)
		01355	SD-01 Preconstruction Submittals															
			Environmental Protection Plan	1.7	G RE													
		01780	SD-02 Shop Drawings															
			As-Built Drawings		G													
			SD-03 Product Data															
			As-Built Record of Equipment and		G													
			Materials															
		02091	SD-01 Preconstruction Submittals															
			Spill Prevention and Response		G RE													
			Plan															
			SD-07 Certificates															
			Certification of Approved		G RE													
			Recycling or Transfer Facility															
			SD-11 Closeout Submittals															
			PCB Articles and Hazardous		FIO													
			Waste Lamps Disposition Report															
			Receipt of Materials at Transfer or		FIO													
			Recycling Facility or TSDF															
		02220	SD-03 Product Data															
			Work Plan		FIO													
		02300	SD-03 Product Data															
			Earthwork		G RE													
			SD-05 Design Data															
			Earthwork		FIO													
			SD-06 Test Reports															
			Testing	3.13	FIO													

SUBMITTAL REGISTER

CONTRACT NO.

TITLE AND LOCATION

OPS, MAINTENANCE AND STORAGE FACILITIES, SEYMOUR JOHNSON AFB, NC

CONTRACTOR

ACTIVITY NO	TRANSMITTAL NO	SPEC SECT	DESCRIPTION ITEM SUBMITTED	PARAGRAPH #	CLASSIFICATION	GOVT OR A/E REVWR	CONTRACTOR: SCHEDULE DATES			CONTRACTOR ACTION			APPROVING AUTHORITY					
							SUBMIT	APPROVAL NEEDED BY	MATERIAL NEEDED BY	ACTION CODE	DATE OF ACTION	DATE FWD TO APPR AUTH/ DATE RCD FROM CONTR	DATE FWD TO OTHER REVIEWER	DATE RCD FROM OTH REVIEWER	ACTION CODE	DATE OF ACTION	MAILED TO CONTR/ DATE RCD FRM APPR AUTH	REMARKS
(a)	(b)	(c)	(d)	(e)	(f)		(g)	(h)	(i)	(j)	(k)	(l)	(m)	(n)	(o)	(p)	(q)	(r)
		02300	SD-07 Certificates															
			Testing	3.13	G	RE												
		02315	SD-01 Preconstruction Submittals															
			Vibratory Rollers		G	RE												
			SD-03 Product Data															
			Testing		G	RE												
			SD-06 Test Reports															
			Field Density Tests		FIO													
			Testing of Fill and Backfill		FIO													
			Materials															
			Inspection, Equipment and		FIO													
			Corrective Action Reports															
			SD-07 Certificates															
			Certificates of Compliance		FIO													
		02316	SD-04 Samples															
			Tracer Wire		G	RE												
			SD-06 Test Reports															
			Field Density Tests	3.4.3	FIO													
			Testing of Fill and Backfill		FIO													
			Materials															
			SD-07 Certificates															
			Testing		G	RE												
		02364	SD-03 Product Data															
			Termiticide Application Plan		FIO													
			Termiticides	2.1	FIO													
			Foundation Exterior	3.2.3	FIO													

SUBMITTAL REGISTER

CONTRACT NO.

TITLE AND LOCATION

OPS, MAINTENANCE AND STORAGE FACILITIES, SEYMOUR JOHNSON AFB, NC

CONTRACTOR

ACTIVITY NO	TRANSMITTAL NO	SPEC SECT	DESCRIPTION ITEM SUBMITTED	PARAGRAPH #	CLASSIFICATION	GOVT OR A/E REVWR	CONTRACTOR: SCHEDULE DATES			CONTRACTOR ACTION			APPROVING AUTHORITY					
							SUBMIT	APPROVAL NEEDED BY	MATERIAL NEEDED BY	ACTION CODE	DATE OF ACTION	DATE FWD TO APPR AUTH/ DATE RCD FROM CONTR	DATE FWD TO OTHER REVIEWER	DATE RCD FROM OTH REVIEWER	ACTION CODE	DATE OF ACTION	MAILED TO CONTR/ DATE RCD FRM APPR AUTH	REMARKS
(a)	(b)	(c)	(d)	(e)	(f)		(g)	(h)	(i)	(j)	(k)	(l)	(m)	(n)	(o)	(p)	(q)	(r)
		02364	Utilities and Vents		FIO													
			Verification of Measurement	3.5	FIO													
			Application Equipment	3.4.1	FIO													
			SD-06 Test Reports															
			Equipment Calibration and Tank	3.4.1	FIO													
			Measurement															
			Soil Moisture	3.3.1	FIO													
			SD-07 Certificates															
			Qualifications	1.2	FIO													
		02374	SD-03 Product Data															
			Sampling and Testing	2.3	FIO													
			Seams and Overlaps	3.1.3	FIO													
			Penetrations	3.1.6	FIO													
			SD-04 Samples															
			Geosynthetic Drainage Layer	2.1	FIO													
			SD-06 Test Reports															
			Geosynthetic Drainage Layer	2.1	FIO													
		02510	SD-03 Product Data															
			Installation	3.1	FIO													
			Waste Water Disposal Method		FIO													
			Satisfactory Installation		FIO													
			SD-06 Test Reports															
			Bacteriological Disinfection	3.3.1	FIO													
			SD-07 Certificates															
			Manufacturer's Representative	1.4	FIO													
			Installation	3.1	FIO													

SUBMITTAL REGISTER

CONTRACT NO.

TITLE AND LOCATION

OPS, MAINTENANCE AND STORAGE FACILITIES, SEYMOUR JOHNSON AFB, NC

CONTRACTOR

ACTIVITY NO	TRANSMITTAL NO	SPEC SECT	DESCRIPTION ITEM SUBMITTED	PARAGRAPH #	CLASSIFICATION	GOVT OR A/E REVWR	CONTRACTOR: SCHEDULE DATES			CONTRACTOR ACTION			APPROVING AUTHORITY					
							SUBMIT	APPROVAL NEEDED BY	MATERIAL NEEDED BY	ACTION CODE	DATE OF ACTION	DATE FWD TO APPR AUTH/ DATE RCD FROM CONTR	DATE FWD TO OTHER REVIEWER	DATE RCD FROM OTH REVIEWER	ACTION CODE	DATE OF ACTION	MAILED TO CONTR/ DATE RCD FRM APPR AUTH	REMARKS
(a)	(b)	(c)	(d)	(e)	(f)		(g)	(h)	(i)	(j)	(k)	(l)	(m)	(n)	(o)	(p)	(q)	(r)
		02531	SD-07 Certificates															
			Portland Cement	2.7.1	FIO													
			Joints	2.3	FIO													
		02547	SD-04 Samples															
			Pavement Samples and Plant		FIO													
			Mixtures															
			SD-06 Test Reports															
			Tests		G RE													
			SD-07 Certificates															
			Waybills and Delivery Tickets		FIO													
		02621	SD-04 Samples															
			Materials	2.1	FIO													
			SD-07 Certificates															
			Materials	2.1	FIO													
		02630	SD-03 Product Data															
			Placing Pipe	3.3	FIO													
			SD-07 Certificates															
			Pipeline Testing	3.8	FIO													
			Hydrostatic Test on Watertight	2.7	FIO													
			Joints															
			Frame and Cover for Gratings	2.3.7	FIO													
		02754	SD-03 Product Data															
			Equipment	1.7	G RE													
			Paving	3.4	FIO													
			Mixture Proportions	2.11	G RE													
		02770	SD-03 Product Data															

SUBMITTAL REGISTER

CONTRACT NO.

TITLE AND LOCATION

OPS, MAINTENANCE AND STORAGE FACILITIES, SEYMOUR JOHNSON AFB, NC

CONTRACTOR

ACTIVITY NO	TRANSMITTAL NO	SPEC SECT	DESCRIPTION ITEM SUBMITTED	PARAGRAPH #	CLASSIFICATION	GOVT OR A/E REVWR	CONTRACTOR: SCHEDULE DATES			CONTRACTOR ACTION			APPROVING AUTHORITY					
							SUBMIT	APPROVAL NEEDED BY	MATERIAL NEEDED BY	ACTION CODE	DATE OF ACTION	DATE FWD TO APPR AUTH/ DATE RCD FROM CONTR	DATE FWD TO OTHER REVIEWER	DATE RCD FROM OTH REVIEWER	ACTION CODE	DATE OF ACTION	MAILED TO CONTR/ DATE RCD FRM APPR AUTH	REMARKS
(a)	(b)	(c)	(d)	(e)	(f)		(g)	(h)	(i)	(j)	(k)	(l)	(m)	(n)	(o)	(p)	(q)	(r)
		02770	Concrete	2.1	FIO													
			SD-06 Test Reports															
			Field Quality Control	3.8	FIO													
		02921	SD-03 Product Data															
			Equipment	3.1.3	FIO													
			Equipment	3.1.3	FIO													
			Chemical Treatment Material	1.4.3	FIO													
			Delivery	1.4.1	FIO													
			Finished Grade and Topsoil	3.2.1	FIO													
			Topsoil	2.2	FIO													
			Quantity Check	3.5	FIO													
			Seed Establishment Period	3.9	FIO													
			Maintenance Record	3.9.3.5	FIO													
			Application of Pesticide	3.6	FIO													
			SD-06 Test Reports															
			Soil Test	3.1.4	FIO													
			SD-07 Certificates															
			Seed	2.1	FIO													
			pH Adjuster	2.3.1	FIO													
			Fertilizer	2.3.2	FIO													
			Asphalt Adhesive		FIO													
			Pesticide	2.7	FIO													
		02922	SD-03 Product Data															
			Equipment	3.1.3	FIO													
			Equipment	3.1.3	FIO													
			Chemical Treatment Material	1.4.3.2	FIO													

SUBMITTAL REGISTER

CONTRACT NO.

TITLE AND LOCATION

OPS, MAINTENANCE AND STORAGE FACILITIES, SEYMOUR JOHNSON AFB, NC

CONTRACTOR

ACTIVITY NO	TRANSMITTAL NO	SPEC SECT	DESCRIPTION ITEM SUBMITTED	PARAGRAPH #	CLASSIFICATION	GOVT OR A/E REVWR	CONTRACTOR: SCHEDULE DATES			CONTRACTOR ACTION			APPROVING AUTHORITY					
							SUBMIT	APPROVAL NEEDED BY	MATERIAL NEEDED BY	ACTION CODE	DATE OF ACTION	DATE FWD TO APPR AUTH/ DATE RCD FROM CONTR	DATE FWD TO OTHER REVIEWER	DATE RCD FROM OTH REVIEWER	ACTION CODE	DATE OF ACTION	MAILED TO CONTR/ DATE RCD FRM APPR AUTH	REMARKS
(a)	(b)	(c)	(d)	(e)	(f)		(g)	(h)	(i)	(j)	(k)	(l)	(m)	(n)	(o)	(p)	(q)	(r)
		02922	Delivery	1.4.1	FIO													
			Finished Grade and Topsoil	3.2.1	FIO													
			Topsoil	2.2	FIO													
			Quantity Check	3.5	FIO													
			Sod Establishment Period	3.9	FIO													
			Maintenance Record	3.9.3.5	FIO													
			Application of Pesticide	3.6	FIO													
			SD-06 Test Reports															
			Soil Test	3.1.4	FIO													
			SD-07 Certificates															
			Sod	2.1	FIO													
			pH Adjuster	2.3.1	FIO													
			Fertilizer	2.3.2	FIO													
			Pesticide	2.5	FIO													
		02930	SD-02 Shop Drawings															
			Shop Drawings	3.3.1	FIO													
			SD-06 Test Reports															
			Soil Test	3.1.4.2	FIO													
			Percolation Test	3.1.4.1	FIO													
			SD-07 Certificates															
			Plant Material	2.1	G RE													
			Topsoil	2.2	FIO													
			pH Adjuster	2.3.1	FIO													
			Organic Material	2.3.3	FIO													
			Soil Conditioner	2.3.4	FIO													
			Organic Mulch	2.4.2	FIO													

SUBMITTAL REGISTER

CONTRACT NO.

TITLE AND LOCATION

OPS, MAINTENANCE AND STORAGE FACILITIES, SEYMOUR JOHNSON AFB, NC

CONTRACTOR

ACTIVITY NO	TRANSMITTAL NO	SPEC SECT	DESCRIPTION ITEM SUBMITTED	PARAGRAPH #	CLASSIFICATION	GOVT OR A/E REVWR	CONTRACTOR: SCHEDULE DATES			CONTRACTOR ACTION			APPROVING AUTHORITY					
							SUBMIT	APPROVAL NEEDED BY	MATERIAL NEEDED BY	ACTION CODE	DATE OF ACTION	DATE FWD TO APPR AUTH/ DATE RCD FROM CONTR	DATE FWD TO OTHER REVIEWER	DATE RCD FROM OTH REVIEWER	ACTION CODE	DATE OF ACTION	MAILED TO CONTR/ DATE RCD FRM APPR AUTH	REMARKS
(a)	(b)	(c)	(d)	(e)	(f)		(g)	(h)	(i)	(j)	(k)	(l)	(m)	(n)	(o)	(p)	(q)	(r)
		02930	Pesticide	2.14	FIO													
		03100	SD-03 Product Data															
			Form Materials	2.1	FIO													
			Form Releasing Agents	2.1.7	FIO													
		03150	SD-02 Shop Drawings															
			Waterstops	2.4	FIO													
			SD-03 Product Data															
			Preformed Expansion Joint Filler	2.2	FIO													
			Preformed Expansion Joint Filler	2.2	FIO													
			Sealant	2.3	FIO													
			Sealant	2.3	FIO													
			Waterstops	2.4	FIO													
			Waterstops	2.4	FIO													
			SD-04 Samples															
			Lubricant for Preformed	2.3.2	FIO													
			Compression Seals															
			Field-Molded Type	2.3.4	FIO													
			Non-metallic Materials	2.4.3	FIO													
			SD-07 Certificates															
			Preformed Expansion Joint Filler	2.2	FIO													
			Sealant	2.3	FIO													
			Waterstops	2.4	FIO													
		03200	SD-02 Shop Drawings															
			Reinforcement	3.1	FIO													
			SD-03 Product Data															
			Welding		FIO													

SUBMITTAL REGISTER

CONTRACT NO.

TITLE AND LOCATION

OPS, MAINTENANCE AND STORAGE FACILITIES, SEYMOUR JOHNSON AFB, NC

CONTRACTOR

ACTIVITY NO	TRANSMITTAL NO	SPEC SECT	DESCRIPTION ITEM SUBMITTED	PARAGRAPH #	CLASSIFICATION	GOVT OR A/E REVWR	CONTRACTOR: SCHEDULE DATES			CONTRACTOR ACTION			APPROVING AUTHORITY					
							SUBMIT	APPROVAL NEEDED BY	MATERIAL NEEDED BY	ACTION CODE	DATE OF ACTION	DATE FWD TO APPR AUTH/ DATE RCD FROM CONTR	DATE FWD TO OTHER REVIEWER	DATE RCD FROM OTH REVIEWER	ACTION CODE	DATE OF ACTION	MAILED TO CONTR/ DATE RCD FRM APPR AUTH	REMARKS
(a)	(b)	(c)	(d)	(e)	(f)		(g)	(h)	(i)	(j)	(k)	(l)	(m)	(n)	(o)	(p)	(q)	(r)
		03300	SD-03 Product Data															
			Mixture Proportions	1.9	G RE													
			SD-04 Samples															
			Surface Retarder		FIO													
			SD-06 Test Reports															
			Testing and Inspection for	3.17	G													
			Contractor Quality Control															
			SD-07 Certificates															
			Qualifications	1.5	FIO													
		03410	SD-02 Shop Drawings															
			Drawings of precast members	1.7.1	G AE													
			SD-03 Product Data															
			inserts	2.2.7.1	FIO													
			Bearing pads	2.2.8	FIO													
			SD-05 Design Data															
			design calculations	1.7.2	G AE													
			Concrete mix design	1.7.3	FIO													
			SD-06 Test Reports															
			Contractor-furnished mix design	2.1	FIO													
			SD-07 Certificates															
			Fabrication	2.3	FIO													
			SD-11 Closeout Submittals															
			batch ticket	1.7.4	FIO													
		04200	SD-02 Shop Drawings															
			Masonry Work		G RE													
			SD-03 Product Data															

SUBMITTAL REGISTER

CONTRACT NO.

TITLE AND LOCATION

OPS, MAINTENANCE AND STORAGE FACILITIES, SEYMOUR JOHNSON AFB, NC

CONTRACTOR

ACTIVITY NO	TRANSMITTAL NO	SPEC SECT	DESCRIPTION ITEM SUBMITTED	PARAGRAPH #	CLASSIFICATION	GOVT OR A/E REVWR	CONTRACTOR: SCHEDULE DATES			CONTRACTOR ACTION			APPROVING AUTHORITY					
							SUBMIT	APPROVAL NEEDED BY	MATERIAL NEEDED BY	ACTION CODE	DATE OF ACTION	DATE FWD TO APPR AUTH/ DATE RCD FROM CONTR	DATE FWD TO OTHER REVIEWER	DATE RCD FROM OTH REVIEWER	ACTION CODE	DATE OF ACTION	MAILED TO CONTR/ DATE RCD FRM APPR AUTH	REMARKS
(a)	(b)	(c)	(d)	(e)	(f)		(g)	(h)	(i)	(j)	(k)	(l)	(m)	(n)	(o)	(p)	(q)	(r)
		04200	Cold Weather Installation	3.1.2	FIO													
			SD-04 Samples															
			Architectural Concrete Masonry		FIO													
			Units (CMU)															
			SD-06 Test Reports															
			Field Testing of Mortar	3.26.1	FIO													
			Field Testing of Grout	3.26.2	FIO													
			Masonry Cement		FIO													
			Fire-rated CMU	2.4.3	FIO													
			SD-07 Certificates															
			Concrete Masonry Units (CMU)	2.4	FIO													
			Anchors, Ties, and Bar	2.12	FIO													
			Positioners															
			Expansion-Joint Materials	2.16	FIO													
			Joint Reinforcement	2.13	FIO													
			Reinforcing Steel Bars and Rods	2.14	FIO													
			Masonry Cement		FIO													
			Mortar Coloring		FIO													
			Insulation	2.17	FIO													
			Insulation	2.17	FIO													
			Precast Concrete Items	2.8	FIO													
			Mortar Admixtures		FIO													
			Grout Admixtures		FIO													
		04220	SD-02 Shop Drawings															
			Detail Drawings	2.4	FIO													
			Detail Drawings	2.10.1	FIO													

SUBMITTAL REGISTER

CONTRACT NO.

TITLE AND LOCATION

OPS, MAINTENANCE AND STORAGE FACILITIES, SEYMOUR JOHNSON AFB, NC

CONTRACTOR

ACTIVITY NO	TRANSMITTAL NO	SPEC SECT	DESCRIPTION ITEM SUBMITTED	PARAGRAPH #	CLASSIFICATION	GOVT OR A/E REVWR	CONTRACTOR: SCHEDULE DATES			CONTRACTOR ACTION			APPROVING AUTHORITY					MAILED TO CONTR/ DATE RCD FRM APPR AUTH	REMARKS
							SUBMIT	APPROVAL NEEDED BY	MATERIAL NEEDED BY	ACTION CODE	DATE OF ACTION	DATE FWD TO APPR AUTH/ DATE RCD FROM CONTR	DATE FWD TO OTHER REVIEWER	DATE RCD FROM OTH REVIEWER	ACTION CODE	DATE OF ACTION		
(a)	(b)	(c)	(d)	(e)	(f)		(g)	(h)	(i)	(j)	(k)	(l)	(m)	(n)	(o)	(p)	(q)	(r)
		04220	Detail Drawings	2.10.3	FIO													
			SD-04 Samples															
			Expansion Joint Materials	2.12	FIO													
			Concrete Masonry Unit		FIO													
			Sample Panel	1.3	FIO													
			SD-06 Test Reports															
			Masonry Veneer/Steel Stud Wall		FIO													
			System															
			SD-07 Certificates															
			Concrete Masonry Unit		FIO													
			Joint Reinforcement	2.3	FIO													
			Joint Reinforcement	3.10.9	FIO													
			Expansion Joint Materials	2.12	FIO													
			Insulation	2.5	FIO													
			Exterior Sheathing	2.7	FIO													
			Moisture Barrier	2.8.1	FIO													
			Vapor Retarder		FIO													
			Veneer Anchors	2.9	FIO													
			Welding	2.10.2	FIO													
		04900	SD-03 Product Data															
			Cleaning Methods	1.2.1	G RE													
			SD-07 Certificates															
			Materials		FIO													
		05120	SD-02 Shop Drawings															
			Structural Steel System		G AE													
			Structural Connections	3.2.1	G AE													

SUBMITTAL REGISTER

CONTRACT NO.

TITLE AND LOCATION

OPS, MAINTENANCE AND STORAGE FACILITIES, SEYMOUR JOHNSON AFB, NC

CONTRACTOR

ACTIVITY NO	TRANSMITTAL NO	SPEC SECT	DESCRIPTION ITEM SUBMITTED	PARAGRAPH #	CLASSIFICATION	GOVT OR A/E REVWR	CONTRACTOR: SCHEDULE DATES			CONTRACTOR ACTION			APPROVING AUTHORITY					
							SUBMIT	APPROVAL NEEDED BY	MATERIAL NEEDED BY	ACTION CODE	DATE OF ACTION	DATE FWD TO APPR AUTH/ DATE RCD FROM CONTR	DATE FWD TO OTHER REVIEWER	DATE RCD FROM OTH REVIEWER	ACTION CODE	DATE OF ACTION	MAILED TO CONTR/ DATE RCD FRM APPR AUTH	REMARKS
(a)	(b)	(c)	(d)	(e)	(f)		(g)	(h)	(i)	(j)	(k)	(l)	(m)	(n)	(o)	(p)	(q)	(r)
		05120	SD-03 Product Data															
			Welding	3.3	FIO													
			Welding	3.3	FIO													
			SD-07 Certificates															
			Mill Test Reports		FIO													
			Welder Qualifications		FIO													
			Welding Inspector	1.5	FIO													
			Fabrication	3.1	FIO													
		05210	SD-02 Shop Drawings															
			Steel Joists	1.3	FIO													
			SD-07 Certificates															
			Steel Joists	1.3	G RE													
		05300	SD-02 Shop Drawings															
			Deck Units	2.1	G RE													
			Accessories	2.5	G RE													
			Attachments	3.3	FIO													
			Holes and Openings	3.4	FIO													
			SD-03 Product Data															
			Deck Units	2.1	G RE													
			Attachments	3.3	FIO													
			SD-07 Certificates															
			Deck Units	2.1	FIO													
			Attachments	3.3	FIO													
		05450	SD-03 Product Data															
			Product Data		FIO													
			SD-02 Shop Drawings															

SUBMITTAL REGISTER

CONTRACT NO.

TITLE AND LOCATION

OPS, MAINTENANCE AND STORAGE FACILITIES, SEYMOUR JOHNSON AFB, NC

CONTRACTOR

ACTIVITY NO	TRANSMITTAL NO	SPEC SECT	DESCRIPTION ITEM SUBMITTED	PARAGRAPH #	CLASSIFICATION	GOVT OR A/E REVWR	CONTRACTOR: SCHEDULE DATES			CONTRACTOR ACTION			APPROVING AUTHORITY					
							SUBMIT	APPROVAL NEEDED BY	MATERIAL NEEDED BY	ACTION CODE	DATE OF ACTION	DATE FWD TO APPR AUTH/ DATE RCD FROM CONTR	DATE FWD TO OTHER REVIEWER	DATE RCD FROM OTH REVIEWER	ACTION CODE	DATE OF ACTION	MAILED TO CONTR/ DATE RCD FRM APPR AUTH	REMARKS
(a)	(b)	(c)	(d)	(e)	(f)		(g)	(h)	(i)	(j)	(k)	(l)	(m)	(n)	(o)	(p)	(q)	(r)
		05450	Shop Drawings		G AE													
			SD-06 Test Reports															
			Design Analysis		G AE													
			SD-07 Certificates															
			Certificate of Compliance		FIO													
		05500	SD-02 Shop Drawings															
			Miscellaneous Metal Items	1.6	FIO													
			SD-04 Samples															
			Miscellaneous Metal Items	1.6	FIO													
		06100	SD-07 Certificates															
			Grading and Marking	2.1.1	FIO													
			Insulation	2.3	FIO													
		06200	SD-02 Shop Drawings															
			Finish Carpentry		FIO													
			SD-04 Samples															
			Moldings		FIO													
			Fascias and Trim	2.1.9	FIO													
			Laminated plastic	#.1	FIO													
		07132	SD-03 Product Data															
			Reinforcing Fabric	3.2.2	FIO													
			Protection Board	3.5.2	FIO													
			Applications	2.1.2	FIO													
			SD-07 Certificates															
			Materials	1.4	FIO													
		07220	SD-03 Product Data															
			Application of Insulation	3.7	FIO													

SUBMITTAL REGISTER

CONTRACT NO.

TITLE AND LOCATION

OPS, MAINTENANCE AND STORAGE FACILITIES, SEYMOUR JOHNSON AFB, NC

CONTRACTOR

ACTIVITY NO	TRANSMITTAL NO	SPEC SECT	DESCRIPTION ITEM SUBMITTED	PARAGRAPH #	CLASSIFICATION	GOVT OR A/E REVWR	CONTRACTOR: SCHEDULE DATES			CONTRACTOR ACTION			APPROVING AUTHORITY					MAILED TO CONTR/ DATE RCD FRM APPR AUTH	REMARKS
							SUBMIT	APPROVAL NEEDED BY	MATERIAL NEEDED BY	ACTION CODE	DATE OF ACTION	DATE FWD TO APPR AUTH/ DATE RCD FROM CONTR	DATE FWD TO OTHER REVIEWER	DATE RCD FROM OTH REVIEWER	ACTION CODE	DATE OF ACTION		
(a)	(b)	(c)	(d)	(e)	(f)		(g)	(h)	(i)	(j)	(k)	(l)	(m)	(n)	(o)	(p)	(q)	(r)
		07220	Inspection	3.8	FIO													
			SD-07 Certificates															
			Insulation	2.2	FIO													
		07412	SD-02 Shop Drawings															
			Metal Roofing	1.7.1	G AE													
			SD-04 Samples															
			Accessories	2.2	FIO													
			Roof Panels	2.1	FIO													
			Fasteners	2.3	FIO													
			SD-07 Certificates															
			Roof Panels	2.1	FIO													
			Installation	3.1	FIO													
			Accessories	2.2	FIO													
			Insulation	2.6	FIO													
			Installer	1.3.3	FIO													
			Warranties	1.7	FIO													
		07551	SD-03 Product Data															
			EVT and Flash Point	3.6	FIO													
			Materials	3.19	FIO													
			Installation	3.9	FIO													
			SD-07 Certificates															
			Manufacturer	1.2	FIO													
			Materials	3.19	FIO													
		07600	SD-02 Shop Drawings															
			Materials	2.1	FIO													
		07840	SD-02 Shop Drawings															

SUBMITTAL REGISTER

CONTRACT NO.

TITLE AND LOCATION

OPS, MAINTENANCE AND STORAGE FACILITIES, SEYMOUR JOHNSON AFB, NC

CONTRACTOR

ACTIVITY NO	TRANSMITTAL NO	SPEC SECT	DESCRIPTION ITEM SUBMITTED	PARAGRAPH #	CLASSIFICATION	GOVT OR A/E REVWR	CONTRACTOR: SCHEDULE DATES			CONTRACTOR ACTION			APPROVING AUTHORITY					MAILED TO CONTR/ DATE RCD FRM APPR AUTH	REMARKS
							SUBMIT	APPROVAL NEEDED BY	MATERIAL NEEDED BY	ACTION CODE	DATE OF ACTION	DATE FWD TO APPR AUTH/ DATE RCD FROM CONTR	DATE FWD TO OTHER REVIEWER	DATE RCD FROM OTH REVIEWER	ACTION CODE	DATE OF ACTION			
(a)	(b)	(c)	(d)	(e)	(f)		(g)	(h)	(i)	(j)	(k)	(l)	(m)	(n)	(o)	(p)	(q)	(r)
		07840	Firestopping Materials	2.1	FIO														
			SD-07 Certificates																
			Firestopping Materials	2.1	FIO														
			Installer Qualifications	1.5	FIO														
			Inspection	3.3	FIO														
		07900	SD-03 Product Data																
			Backing	2.1	FIO														
			Bond-Breaker	2.2	FIO														
			Sealant	2.5	FIO														
			SD-07 Certificates																
			Sealant	2.5	FIO														
		08110	SD-02 Shop Drawings																
			Doors and Frames	2.1	FIO														
			SD-03 Product Data																
			Fire Rated Doors	2.2	FIO														
			SD-07 Certificates																
			Fire Rated Doors	2.2	FIO														
			Thermal Insulated Doors	2.3	FIO														
			Sound Rated Doors	2.5	FIO														
		08210	SD-02 Shop Drawings																
			Wood Doors		FIO														
			Fire Doors	3.1.2	FIO														
		08520	SD-02 Shop Drawings																
			Aluminum Windows		FIO														
			SD-03 Product Data																
			Aluminum Windows		FIO														

SUBMITTAL REGISTER

CONTRACT NO.

TITLE AND LOCATION

OPS, MAINTENANCE AND STORAGE FACILITIES, SEYMOUR JOHNSON AFB, NC

CONTRACTOR

ACTIVITY NO	TRANSMITTAL NO	SPEC SECT	DESCRIPTION ITEM SUBMITTED	PARAGRAPH #	CLASSIFICATION	GOVT OR A/E REVWR	CONTRACTOR: SCHEDULE DATES			CONTRACTOR ACTION			APPROVING AUTHORITY					
							SUBMIT	APPROVAL NEEDED BY	MATERIAL NEEDED BY	ACTION CODE	DATE OF ACTION	DATE FWD TO APPR AUTH/ DATE RCD FROM CONTR	DATE FWD TO OTHER REVIEWER	DATE RCD FROM OTH REVIEWER	ACTION CODE	DATE OF ACTION	MAILED TO CONTR/ DATE RCD FRM APPR AUTH	REMARKS
(a)	(b)	(c)	(d)	(e)	(f)		(g)	(h)	(i)	(j)	(k)	(l)	(m)	(n)	(o)	(p)	(q)	(r)
		08520	SD-06 Test Reports															
			Aluminum Windows		FIO													
			SD-07 Certificates															
			Aluminum Windows		FIO													
		08700	SD-02 Shop Drawings															
			Drawings	2.1	G RE													
			SD-03 Product Data															
			Exit Device Accessories	2.5	FIO													
			Hardware Schedule	1.3	FIO													
			Keying	2.7	G RE													
			SD-07 Certificates															
			Hardware and Accessories		FIO													
		08810	SD-02 Shop Drawings															
			Installation	3.2	FIO													
			SD-03 Product Data															
			Insulating Glass	2.3	FIO													
			Glazing Accessories	2.11	FIO													
			SD-07 Certificates															
			Insulating Glass	2.3	FIO													
		09225	SD-03 Product Data															
			Materials	1.3	FIO													
			SD-04 Samples															
			Stucco Finish Coat	2.2	FIO													
		09250	SD-07 Certificates															
			Gypsum Wallboard	2.5.1	FIO													
			Gypsum Wallboard	3.8	FIO													

SUBMITTAL REGISTER

CONTRACT NO.

TITLE AND LOCATION

OPS, MAINTENANCE AND STORAGE FACILITIES, SEYMOUR JOHNSON AFB, NC

CONTRACTOR

ACTIVITY NO	TRANSMITTAL NO	SPEC SECT	DESCRIPTION ITEM SUBMITTED	PARAGRAPH #	CLASSIFICATION	GOVT OR A/E REVWR	CONTRACTOR: SCHEDULE DATES			CONTRACTOR ACTION			APPROVING AUTHORITY					
							SUBMIT	APPROVAL NEEDED BY	MATERIAL NEEDED BY	ACTION CODE	DATE OF ACTION	DATE FWD TO APPR AUTH/ DATE RCD FROM CONTR	DATE FWD TO OTHER REVIEWER	DATE RCD FROM OTH REVIEWER	ACTION CODE	DATE OF ACTION	MAILED TO CONTR/ DATE RCD FRM APPR AUTH	REMARKS
(a)	(b)	(c)	(d)	(e)	(f)		(g)	(h)	(i)	(j)	(k)	(l)	(m)	(n)	(o)	(p)	(q)	(r)
		09250	Steel Framing	2.6.2	FIO													
			Steel Framing	3.1	FIO													
			Fire-Rated Gypsum Board	2.4.2	FIO													
		09510	SD-03 Product Data															
			Acoustical Ceiling Systems		FIO													
			SD-04 Samples															
			Acoustical Units	2.1	FIO													
			SD-07 Certificates															
			Acoustical Units	2.1	FIO													
		09650	SD-03 Product Data															
			Resilient Flooring and		FIO													
			Accessories															
			SD-04 Samples															
			Flooring	3.2	FIO													
			SD-06 Test Reports															
			Moisture Test	3.3	FIO													
		09680	SD-02 Shop Drawings															
			Installation	3.4	FIO													
			SD-03 Product Data															
			Carpet	1.3	FIO													
			Carpet	2.1	FIO													
			Carpet	2.1.1	FIO													
			Carpet	#.1	FIO													
			Carpet	#.1	FIO													
			Carpet	3.1	FIO													
			Surface Preparation	3.1	FIO													

SUBMITTAL REGISTER

CONTRACT NO.

TITLE AND LOCATION

OPS, MAINTENANCE AND STORAGE FACILITIES, SEYMOUR JOHNSON AFB, NC

CONTRACTOR

ACTIVITY NO	TRANSMITTAL NO	SPEC SECT	DESCRIPTION ITEM SUBMITTED	PARAGRAPH #	CLASSIFICATION	GOVT OR A/E REVWR	CONTRACTOR: SCHEDULE DATES			CONTRACTOR ACTION			APPROVING AUTHORITY					
							SUBMIT	APPROVAL NEEDED BY	MATERIAL NEEDED BY	ACTION CODE	DATE OF ACTION	DATE FWD TO APPR AUTH/ DATE RCD FROM CONTR	DATE FWD TO OTHER REVIEWER	DATE RCD FROM OTH REVIEWER	ACTION CODE	DATE OF ACTION	MAILED TO CONTR/ DATE RCD FRM APPR AUTH	REMARKS
(a)	(b)	(c)	(d)	(e)	(f)		(g)	(h)	(i)	(j)	(k)	(l)	(m)	(n)	(o)	(p)	(q)	(r)
		09680	Installation	3.4	FIO													
			Regulatory Requirements	1.3	FIO													
			SD-04 Samples															
			Carpet	1.3	FIO													
			Carpet	2.1	FIO													
			Carpet	2.1.1	FIO													
			Carpet	#.1	FIO													
			Carpet	#.1	FIO													
			Carpet	3.1	FIO													
			Molding		FIO													
			SD-06 Test Reports															
			Moisture and Alkalinity Tests	3.2	FIO													
			SD-07 Certificates															
			Carpet	1.3	FIO													
			Carpet	2.1	FIO													
			Carpet	2.1.1	FIO													
			Carpet	#.1	FIO													
			Carpet	#.1	FIO													
			Carpet	3.1	FIO													
			SD-10 Operation and Maintenance															
			Data															
			Carpet	1.3	FIO													
			Carpet	2.1	FIO													
			Carpet	2.1.1	FIO													
			Carpet	#.1	FIO													
			Carpet	#.1	FIO													

SUBMITTAL REGISTER

CONTRACT NO.

TITLE AND LOCATION

OPS, MAINTENANCE AND STORAGE FACILITIES, SEYMOUR JOHNSON AFB, NC

CONTRACTOR

ACTIVITY NO	TRANSMITTAL NO	SPEC SECT	DESCRIPTION ITEM SUBMITTED	PARAGRAPH #	CLASSIFICATION	GOVT OR A/E REVWR	CONTRACTOR: SCHEDULE DATES			CONTRACTOR ACTION			APPROVING AUTHORITY					
							SUBMIT	APPROVAL NEEDED BY	MATERIAL NEEDED BY	ACTION CODE	DATE OF ACTION	DATE FWD TO APPR AUTH/ DATE RCD FROM CONTR	DATE FWD TO OTHER REVIEWER	DATE RCD FROM OTH REVIEWER	ACTION CODE	DATE OF ACTION	MAILED TO CONTR/ DATE RCD FRM APPR AUTH	REMARKS
(a)	(b)	(c)	(d)	(e)	(f)		(g)	(h)	(i)	(j)	(k)	(l)	(m)	(n)	(o)	(p)	(q)	(r)
		09680	Carpet	3.1	FIO													
			Cleaning and Protection	3.5	FIO													
		09720	SD-03 Product Data															
			Wallcoverings	2.1	FIO													
			Manufacturer's Instructions		FIO													
			Installation	3.3	FIO													
			Maintenance		FIO													
			Clean-Up	3.4	FIO													
			SD-04 Samples															
			Wallcoverings	2.1	FIO													
			SD-07 Certificates															
			Wallcoverings	2.1	FIO													
		09900	SD-03 Product Data															
			Paint	2.1	FIO													
			Mixing and Thinning	3.3	FIO													
			Application	3.4	FIO													
			SD-04 Samples															
			Moisture-Curing Polyurethane		FIO													
			Paint	2.1	FIO													
			SD-06 Test Reports															
			Paint	2.1	FIO													
			SD-07 Certificates															
			Lead	2.1.3	FIO													
			Mildewcide and Insecticide		FIO													
		10100	SD-03 Product Data															
			Visual Display Boards		FIO													

SUBMITTAL REGISTER

CONTRACT NO.

TITLE AND LOCATION

OPS, MAINTENANCE AND STORAGE FACILITIES, SEYMOUR JOHNSON AFB, NC

CONTRACTOR

ACTIVITY NO	TRANSMITTAL NO	SPEC SECT	DESCRIPTION ITEM SUBMITTED	PARAGRAPH #	CLASSIFICATION	GOVT OR A/E REVWR	CONTRACTOR: SCHEDULE DATES			CONTRACTOR ACTION			APPROVING AUTHORITY					
							SUBMIT	APPROVAL NEEDED BY	MATERIAL NEEDED BY	ACTION CODE	DATE OF ACTION	DATE FWD TO APPR AUTH/ DATE RCD FROM CONTR	DATE FWD TO OTHER REVIEWER	DATE RCD FROM OTH REVIEWER	ACTION CODE	DATE OF ACTION	MAILED TO CONTR/ DATE RCD FRM APPR AUTH	REMARKS
(a)	(b)	(c)	(d)	(e)	(f)		(g)	(h)	(i)	(j)	(k)	(l)	(m)	(n)	(o)	(p)	(q)	(r)
		10100	07 Certificates		FIO													
		10201	SD-02 Shop Drawings															
			Wall louvers	2.2	FIO													
		10440	SD-02 Shop Drawings															
			Detail Drawings	3.1	FIO													
			SD-03 Product Data															
			Installation	3.1	FIO													
		12490	SD-02 Shop Drawings															
			Approved Detail Drawings	3.2	FIO													
			SD-03 Product Data															
			Window Treatments	3.2	FIO													
			Hardware	1.3	FIO													
			SD-04 Samples															
			Window Treatments	3.2	FIO													
		12600	SD-02 Shop Drawings															
			Installation	3.2	G	RE												
			SD-03 Product Data															
			Theater Chairs	1.3	G	RE												
			SD-04 Samples															
			Theater Chairs	1.3	G	RE												
		13080	SD-02 Shop Drawings															
			Bracing	3.1	FIO													
			Resilient Vibration Isolation	3.4	FIO													
			Devices															
			Equipment Requirements	1.4	FIO													
			SD-03 Product Data															

SUBMITTAL REGISTER

CONTRACT NO.

TITLE AND LOCATION

OPS, MAINTENANCE AND STORAGE FACILITIES, SEYMOUR JOHNSON AFB, NC

CONTRACTOR

ACTIVITY NO	TRANSMITTAL NO	SPEC SECT	DESCRIPTION ITEM SUBMITTED	PARAGRAPH #	CLASSIFICATION	GOVT OR A/E REVWR	CONTRACTOR: SCHEDULE DATES			CONTRACTOR ACTION			APPROVING AUTHORITY					
							SUBMIT	APPROVAL NEEDED BY	MATERIAL NEEDED BY	ACTION CODE	DATE OF ACTION	DATE FWD TO APPR AUTH/ DATE RCD FROM CONTR	DATE FWD TO OTHER REVIEWER	DATE RCD FROM OTH REVIEWER	ACTION CODE	DATE OF ACTION	MAILED TO CONTR/ DATE RCD FRM APPR AUTH	REMARKS
(a)	(b)	(c)	(d)	(e)	(f)		(g)	(h)	(i)	(j)	(k)	(l)	(m)	(n)	(o)	(p)	(q)	(r)
		13080	Bracing	3.1	FIO													
			Equipment Requirements	1.4	G RE													
		13280	SD-03 Product Data															
			Respiratory Protection Program	1.12	G AE													
			Cleanup and Disposal	3.11	G AE													
			Detailed Drawings		G AE													
			Materials and Equipment		FIO													
			Qualifications	1.5	G AE													
			Training Program	1.11	FIO													
			Medical Requirements	1.10	FIO													
			Encapsulants	2.1	G AE													
			SD-06 Test Reports															
			Exposure Assessment and Air	3.9	G AE													
			Monitoring															
			Licenses, Permits and	1.14	G AE													
			Notifications															
			SD-07 Certificates															
			Vacuum, Filtrationand Ventilation		FIO													
			Equipment															
		13721	SD-03 Product Data															
			Intrusion Detection System		G RE													
			Key Control Plan	2.1.6.1	G RE													
			Key Control Plan	2.1.6.2	G RE													
			Spare Parts		FIO													
			Manufacturer's Instructions	3.1	G RE													
			Testing	1.4	G RE													

SUBMITTAL REGISTER

CONTRACT NO.

TITLE AND LOCATION

OPS, MAINTENANCE AND STORAGE FACILITIES, SEYMOUR JOHNSON AFB, NC

CONTRACTOR

ACTIVITY NO	TRANSMITTAL NO	SPEC SECT	DESCRIPTION ITEM SUBMITTED	PARAGRAPH #	CLASSIFICATION	GOVT OR A/E REVWR	CONTRACTOR: SCHEDULE DATES			CONTRACTOR ACTION			APPROVING AUTHORITY					MAILED TO CONTR/ DATE RCD FRM APPR AUTH	REMARKS
							SUBMIT	APPROVAL NEEDED BY	MATERIAL NEEDED BY	ACTION CODE	DATE OF ACTION	DATE FWD TO APPR AUTH/ DATE RCD FROM CONTR	DATE FWD TO OTHER REVIEWER	DATE RCD FROM OTH REVIEWER	ACTION CODE	DATE OF ACTION		
(a)	(b)	(c)	(d)	(e)	(f)		(g)	(h)	(i)	(j)	(k)	(l)	(m)	(n)	(o)	(p)	(q)	(r)
		13721	Experience	1.7	G RE													
			SD-06 Test Reports															
			Performance Verification Test	3.3.3	G RE													
			Materials and Equipment	2.1.1	FIO													
		13851	SD-02 Shop Drawings															
			Fire Alarm Reporting System	1.4.1	G RE													
			SD-03 Product Data															
			Storage Batteries	2.2	G AE													
			Voltage Drop		G AE													
			Special Tools and Spare Parts	2.7.4	FIO													
			Technical Data and Computer	1.5	FIO													
			Software															
			Training	3.6	FIO													
			Testing	3.5	FIO													
			SD-06 Test Reports															
			Testing	3.5	FIO													
			SD-07 Certificates															
			Equipment		FIO													
			Qualifications	1.3.7	FIO													
			SD-10 Operation and Maintenance															
			Data															
			Technical Data and Computer	1.5	FIO													
			Software															
		13930	SD-02 Shop Drawings															
			Sprinkler System Shop Drawings		G AE													
			As-Built Shop Drawings		FIO													

SUBMITTAL REGISTER

CONTRACT NO.

TITLE AND LOCATION

OPS, MAINTENANCE AND STORAGE FACILITIES, SEYMOUR JOHNSON AFB, NC

CONTRACTOR

ACTIVITY NO	TRANSMITTAL NO	SPEC SECT	DESCRIPTION ITEM SUBMITTED	PARAGRAPH #	CLASSIFICATION	GOVT OR A/E REVWR	CONTRACTOR: SCHEDULE DATES			CONTRACTOR ACTION			APPROVING AUTHORITY					MAILED TO CONTR/ DATE RCD FRM APPR AUTH	REMARKS
							SUBMIT	APPROVAL NEEDED BY	MATERIAL NEEDED BY	ACTION CODE	DATE OF ACTION	DATE FWD TO APPR AUTH/ DATE RCD FROM CONTR	DATE FWD TO OTHER REVIEWER	DATE RCD FROM OTH REVIEWER	ACTION CODE	DATE OF ACTION		
(a)	(b)	(c)	(d)	(e)	(f)		(g)	(h)	(i)	(j)	(k)	(l)	(m)	(n)	(o)	(p)	(q)	(r)
		13930	SD-03 Product Data															
			Fire Protection Related Submittals	3.1	FIO													
			Load Calculations for Sizing Sway		G	AE												
			Bracing															
			Components and Equipment Data		FIO													
			Hydraulic Calculations	1.7	G	AE												
			Spare Parts		FIO													
			Preliminary Tests Procedures		FIO													
			Final Acceptance Test Procedures		FIO													
			On-site Training Schedule		FIO													
			Preliminary Tests	3.10	FIO													
			Final Acceptance Test		G	RE												
			Fire Protection Specialist		FIO													
			Qualifications															
			Sprinkler System Installer	1.9	FIO													
			Qualifications															
			SD-06 Test Reports															
			Preliminary Tests Report		FIO													
			Final Acceptance Test Report		G	RE												
			SD-07 Certificates															
			Fire Protection Specialist		FIO													
			Inspection															
			SD-10 Operation and Maintenance															
			Data															
			Wet Pipe Sprinkler System		FIO													
		15070	SD-02 Shop Drawings															

SUBMITTAL REGISTER

CONTRACT NO.

TITLE AND LOCATION

OPS, MAINTENANCE AND STORAGE FACILITIES, SEYMOUR JOHNSON AFB, NC

CONTRACTOR

ACTIVITY NO	TRANSMITTAL NO	SPEC SECT	DESCRIPTION ITEM SUBMITTED	PARAGRAPH #	CLASSIFICATION	GOVT OR A/E REVWR	CONTRACTOR: SCHEDULE DATES			CONTRACTOR ACTION			APPROVING AUTHORITY					
							SUBMIT	APPROVAL NEEDED BY	MATERIAL NEEDED BY	ACTION CODE	DATE OF ACTION	DATE FWD TO APPR AUTH/ DATE RCD FROM CONTR	DATE FWD TO OTHER REVIEWER	DATE RCD FROM OTH REVIEWER	ACTION CODE	DATE OF ACTION	MAILED TO CONTR/ DATE RCD FRM APPR AUTH	REMARKS
(a)	(b)	(c)	(d)	(e)	(f)		(g)	(h)	(i)	(j)	(k)	(l)	(m)	(n)	(o)	(p)	(q)	(r)
		15070	Coupling and Bracing	3.1	FIO													
			Flexible Couplings or Joints	3.3	FIO													
			Equipment Requirements	1.3	FIO													
			Contractor Designed Bracing	1.2.4	G RE													
			SD-03 Product Data															
			Coupling and Bracing	3.1	FIO													
			Equipment Requirements	1.3	FIO													
			Contractor Designed Bracing	1.2.4	FIO													
		15080	SD-04 Samples															
			Thermal Insulation Materials		FIO													
		15400	SD-02 Shop Drawings															
			Plumbing System	3.9.1	FIO													
			SD-03 Product Data															
			Plumbing Fixture Schedule	3.10	FIO													
			Wall Hydrants		FIO													
			Plumbing System	3.9.1	FIO													
			SD-06 Test Reports															
			Tests, Flushing and Disinfection	3.9	FIO													
			Backflow Prevention Assembly		FIO													
			Tests															
			SD-07 Certificates															
			Materials and Equipment		FIO													
			SD-10 Operation and Maintenance															
			Data															
			Plumbing System	3.9.1	FIO													
		15569	SD-02 Shop Drawings															

SUBMITTAL REGISTER

CONTRACT NO.

TITLE AND LOCATION

OPS, MAINTENANCE AND STORAGE FACILITIES, SEYMOUR JOHNSON AFB, NC

CONTRACTOR

ACTIVITY NO	TRANSMITTAL NO	SPEC SECT	DESCRIPTION ITEM SUBMITTED	PARAGRAPH #	CLASSIFICATION	GOVT OR A/E REVWR	CONTRACTOR: SCHEDULE DATES			CONTRACTOR ACTION			APPROVING AUTHORITY					
							SUBMIT	APPROVAL NEEDED BY	MATERIAL NEEDED BY	ACTION CODE	DATE OF ACTION	DATE FWD TO APPR AUTH/ DATE RCD FROM CONTR	DATE FWD TO OTHER REVIEWER	DATE RCD FROM OTH REVIEWER	ACTION CODE	DATE OF ACTION	MAILED TO CONTR/ DATE RCD FRM APPR AUTH	REMARKS
(a)	(b)	(c)	(d)	(e)	(f)		(g)	(h)	(i)	(j)	(k)	(l)	(m)	(n)	(o)	(p)	(q)	(r)
		15569	Heating System		G RE													
			SD-03 Product Data															
			Manufacturer's Catalog Data		FIO													
			Spare Parts Data		FIO													
			Water Treatment Plan		FIO													
		15650	SD-02 Shop Drawings															
			Central Refrigerated		G RE													
			Air-Conditioning System															
			ED		FIO													
			SD-03 Product Data															
			Central Refrigerated		G RE													
			Air-Conditioning System															
			Water Treatment Systems	2.10	FIO													
			Spare Parts		FIO													
			Posted Instructions		FIO													
			Verification of Dimensions	1.7.1	FIO													
			Manufacturer's Multi-Year	1.8	FIO													
			Compressor Warranty															
			Tests	3.2	FIO													
			Demonstrations	3.6	FIO													
			SD-06 Test Reports															
			Field Tests	3.2.1	FIO													
			SD-07 Certificates															
			Central Refrigerated		FIO													
			Air-Conditioning System															

SUBMITTAL REGISTER

CONTRACT NO.

TITLE AND LOCATION

OPS, MAINTENANCE AND STORAGE FACILITIES, SEYMOUR JOHNSON AFB, NC

CONTRACTOR

ACTIVITY NO	TRANSMITTAL NO	SPEC SECT	DESCRIPTION ITEM SUBMITTED	PARAGRAPH #	CLASSIFICATION	GOVT OR A/E REVWR	CONTRACTOR: SCHEDULE DATES			CONTRACTOR ACTION			APPROVING AUTHORITY					MAILED TO CONTR/ DATE RCD FRM APPR AUTH	REMARKS
							SUBMIT	APPROVAL NEEDED BY	MATERIAL NEEDED BY	ACTION CODE	DATE OF ACTION	DATE FWD TO APPR AUTH/ DATE RCD FROM CONTR	DATE FWD TO OTHER REVIEWER	DATE RCD FROM OTH REVIEWER	ACTION CODE	DATE OF ACTION			
(a)	(b)	(c)	(d)	(e)	(f)		(g)	(h)	(i)	(j)	(k)	(l)	(m)	(n)	(o)	(p)	(q)	(r)	
		15650	SD-10 Operation and Maintenance																
			Data																
			Operation Manual		FIO														
			Maintenance Manuals	3.6	FIO														
		15895	SD-02 Shop Drawings																
			Drawings	3.1.9	G	RE													
			Installation	3.1	G	RE													
			SD-03 Product Data																
			Components and Equipment	2.1	FIO														
			Test Procedures		G	RE													
			Welding Procedures	3.1.1.1	FIO														
			System Diagrams		FIO														
			Similar Services		FIO														
			Welding Qualification		FIO														
			Test Schedules		FIO														
			Field Training Schedule		FIO														
			SD-06 Test Reports																
			Test Reports		FIO														
			SD-10 Operation and Maintenance																
			Data																
			Air Supply, Distribution,		G	RE													
			Ventilation, and Exhaust Manuals																
		15951	SD-02 Shop Drawings																
			HVAC Control System	3.1.1	G	RE													
			SD-03 Product Data																
			Service Organizations		FIO														

SUBMITTAL REGISTER

CONTRACT NO.

TITLE AND LOCATION

OPS, MAINTENANCE AND STORAGE FACILITIES, SEYMOUR JOHNSON AFB, NC

CONTRACTOR

ACTIVITY NO	TRANSMITTAL NO	SPEC SECT	DESCRIPTION ITEM SUBMITTED	PARAGRAPH #	CLASSIFICATION	GOVT OR A/E REVWR	CONTRACTOR: SCHEDULE DATES			CONTRACTOR ACTION			APPROVING AUTHORITY					
							SUBMIT	APPROVAL NEEDED BY	MATERIAL NEEDED BY	ACTION CODE	DATE OF ACTION	DATE FWD TO APPR AUTH/ DATE RCD FROM CONTR	DATE FWD TO OTHER REVIEWER	DATE RCD FROM OTH REVIEWER	ACTION CODE	DATE OF ACTION	MAILED TO CONTR/ DATE RCD FRM APPR AUTH	REMARKS
(a)	(b)	(c)	(d)	(e)	(f)		(g)	(h)	(i)	(j)	(k)	(l)	(m)	(n)	(o)	(p)	(q)	(r)
		15951	Equipment Compliance Booklet	1.6	FIO													
			Commissioning Procedures	3.4	FIO													
			Performance Verification Test	1.6	FIO													
			Procedures															
			Training	3.6	FIO													
			SD-06 Test Reports															
			Commissioning Report	3.6.2	G RE													
			Performance Verification Test		FIO													
			SD-10 Operation and Maintenance															
			Data															
			Operation Manual	1.5	FIO													
			Maintenance and Repair Manual	1.6	FIO													
		15990	SD-02 Shop Drawings															
			TAB Schematic Drawings and	3.3	G RE													
			Report Forms															
			SD-03 Product Data															
			TAB Related HVAC Submittals	3.2	FIO													
			TAB Procedures	3.5.1	G RE													
			Calibration	1.4	FIO													
			Systems Readiness Check	3.5.2	G RE													
			TAB Execution	3.5.1	G RE													
			TAB Verification	3.5.4	G RE													
			SD-06 Test Reports															
			Design Review Report	3.1	G RE													
			Systems Readiness Check	3.5.2	G RE													
			TAB Report	3.5.3	G RE													

SUBMITTAL REGISTER

CONTRACT NO.

TITLE AND LOCATION

OPS, MAINTENANCE AND STORAGE FACILITIES, SEYMOUR JOHNSON AFB, NC

CONTRACTOR

ACTIVITY NO	TRANSMITTAL NO	SPEC SECT	DESCRIPTION ITEM SUBMITTED	PARAGRAPH #	CLASSIFICATION	GOVT OR A/E REVWR	CONTRACTOR: SCHEDULE DATES			CONTRACTOR ACTION			APPROVING AUTHORITY					
							SUBMIT	APPROVAL NEEDED BY	MATERIAL NEEDED BY	ACTION CODE	DATE OF ACTION	DATE FWD TO APPR AUTH/ DATE RCD FROM CONTR	DATE FWD TO OTHER REVIEWER	DATE RCD FROM OTH REVIEWER	ACTION CODE	DATE OF ACTION	MAILED TO CONTR/ DATE RCD FRM APPR AUTH	REMARKS
(a)	(b)	(c)	(d)	(e)	(f)		(g)	(h)	(i)	(j)	(k)	(l)	(m)	(n)	(o)	(p)	(q)	(r)
		15990	TAB Verification Report	3.5.4	G	RE												
			SD-07 Certificates															
			Ductwork Leak Testing	3.4	FIO													
			TAB Firm	1.5.1	G	RE												
			TAB Specialist	1.5.2	G	RE												
		15995	SD-03 Product Data															
			Commissioning Team	3.1	FIO													
			Test Procedures		FIO													
			Test Schedule		G	RE												
			SD-06 Test Reports															
			Test Reports		G	RE												
		16370	SD-02 Shop Drawings															
			Electrical Distribution System		G	RE												
			As-Built Drawings		G	RE												
			SD-03 Product Data															
			Manufacturer's Catalog		G	RE												
			Material, Equipment, and Fixture		G	RE												
			Lists															
			Installation Procedures		FIO													
			SD-06 Test Reports															
			Factory Test		G	RE												
			Field Testing	3.11	G	RE												
			Test Reports		G	RE												
			SD-07 Certificates															
			Materials and Equipment		FIO													

SUBMITTAL REGISTER

CONTRACT NO.

TITLE AND LOCATION

OPS, MAINTENANCE AND STORAGE FACILITIES, SEYMOUR JOHNSON AFB, NC

CONTRACTOR

ACTIVITY NO	TRANSMITTAL NO	SPEC SECT	DESCRIPTION ITEM SUBMITTED	PARAGRAPH #	CLASSIFICATION	GOVT OR A/E REVWR	CONTRACTOR: SCHEDULE DATES			CONTRACTOR ACTION			APPROVING AUTHORITY					
							SUBMIT	APPROVAL NEEDED BY	MATERIAL NEEDED BY	ACTION CODE	DATE OF ACTION	DATE FWD TO APPR AUTH/ DATE RCD FROM CONTR	DATE FWD TO OTHER REVIEWER	DATE RCD FROM OTH REVIEWER	ACTION CODE	DATE OF ACTION	MAILED TO CONTR/ DATE RCD FRM APPR AUTH	REMARKS
(a)	(b)	(c)	(d)	(e)	(f)		(g)	(h)	(i)	(j)	(k)	(l)	(m)	(n)	(o)	(p)	(q)	(r)
		16370	SD-10 Operation and Maintenance															
			Data															
			Electrical Distribution System		G	RE												
		16375	SD-02 Shop Drawings															
			Electrical Distribution System		G	RE												
			As-Built Drawings		G	RE												
			SD-03 Product Data															
			Manufacturer's Catalog Data		G	RE												
			Material, Equipment, and Fixture		G	RE												
			Lists															
			Installation Procedures		FIO													
			SD-06 Test Reports															
			Factory Tests	2.17	G	RE												
			Field Testing	3.11	G	RE												
			Test Reports	3.11.1	G	RE												
			Cable Installation Reports		G	RE												
			SD-07 Certificates															
			Materials and Equipment		FIO													
			Cable Splicer Qualification		FIO													
			Cable Installer Qualifications		FIO													
			SD-10 Operation and Maintenance															
			Data															
			Electrical Distribution System		G	RE												
		16415	SD-02 Shop Drawings															
			Interior Electrical Equipment		G	RE												
			SD-03 Product Data															

SUBMITTAL REGISTER

CONTRACT NO.

TITLE AND LOCATION

OPS, MAINTENANCE AND STORAGE FACILITIES, SEYMOUR JOHNSON AFB, NC

CONTRACTOR

ACTIVITY NO	TRANSMITTAL NO	SPEC SECT	DESCRIPTION ITEM SUBMITTED	PARAGRAPH #	CLASSIFICATION	GOVT OR A/E REVWR	CONTRACTOR: SCHEDULE DATES			CONTRACTOR ACTION			APPROVING AUTHORITY					
							SUBMIT	APPROVAL NEEDED BY	MATERIAL NEEDED BY	ACTION CODE	DATE OF ACTION	DATE FWD TO APPR AUTH/ DATE RCD FROM CONTR	DATE FWD TO OTHER REVIEWER	DATE RCD FROM OTH REVIEWER	ACTION CODE	DATE OF ACTION	MAILED TO CONTR/ DATE RCD FRM APPR AUTH	REMARKS
(a)	(b)	(c)	(d)	(e)	(f)		(g)	(h)	(i)	(j)	(k)	(l)	(m)	(n)	(o)	(p)	(q)	(r)
		16415	Manufacturer's Catalog		G	RE												
			Material, Equipment, and Fixture		G	RE												
			Lists															
			Installation Procedures		FIO													
			As-Built Drawings	1.2.6	G	RE												
			Onsite Tests	3.24.2	G	RE												
			SD-06 Test Reports															
			Factory Test Reports		G	RE												
			Field Test Plan		G	RE												
			Field Test Reports	3.22	G	RE												
			SD-07 Certificates															
			Materials and Equipment	1.4	FIO													
		16710	SD-02 Shop Drawings															
			Premises Distribution System	1.7	G													
			Record Drawings		G													
			SD-03 Product Data															
			Record Keeping and	1.8	G													
			Documentation															
			Manufacturer's Recommendations		G													
			Test Plan		G													
			Qualifications	1.4	G													
			SD-06 Test Reports															
			Test Reports		G													
			SD-07 Certificates															
			Premises Distribution System	1.7	G													
			Materials and Equipment	2.1	G													

SUBMITTAL REGISTER

CONTRACT NO.

TITLE AND LOCATION

OPS, MAINTENANCE AND STORAGE FACILITIES, SEYMOUR JOHNSON AFB, NC

CONTRACTOR

ACTIVITY NO	TRANSMITTAL NO	SPEC SECT	DESCRIPTION ITEM SUBMITTED	PARAGRAPH #	CLASSIFICATION	GOVT OR A/E REVWR	CONTRACTOR: SCHEDULE DATES			CONTRACTOR ACTION			APPROVING AUTHORITY					
							SUBMIT	APPROVAL NEEDED BY	MATERIAL NEEDED BY	ACTION CODE	DATE OF ACTION	DATE FWD TO APPR AUTH/ DATE RCD FROM CONTR	DATE FWD TO OTHER REVIEWER	DATE RCD FROM OTH REVIEWER	ACTION CODE	DATE OF ACTION	MAILED TO CONTR/ DATE RCD FRM APPR AUTH	REMARKS
(a)	(b)	(c)	(d)	(e)	(f)		(g)	(h)	(i)	(j)	(k)	(l)	(m)	(n)	(o)	(p)	(q)	(r)
		16710	Installers		G													
		16770	SD-02 Shop Drawings															
			Public Address System		FIO													
			SD-03 Product Data															
			Spare Parts		FIO													
			SD-06 Test Reports															
			Approved Test Procedures	3.3	FIO													
			Acceptance Tests	3.3	FIO													
			SD-10 Operation and Maintenance															
			Data															
			Public Address System		FIO													

SECTION TABLE OF CONTENTS

DIVISION 01 - GENERAL REQUIREMENTS

SECTION 01355

ENVIRONMENTAL PROTECTION

10/00

PART 1 GENERAL

1.1 REFERENCES
1.2 DEFINITIONS
1.2.1 Environmental Pollution and Damage
1.2.2 Environmental Protection
1.2.3 Contractor Generated Hazardous Waste
1.2.4 Installation Pest Management Coordinator
1.2.4 Omitted
1.2.5 Land Application for Discharge Water
1.2.6 Pesticide
1.2.7 Pests
1.2.8 Surface Discharge
1.2.9 Waters of the United States
1.2.10 Wetlands
1.3 GENERAL REQUIREMENTS
1.4 SUBCONTRACTORS
1.5 PAYMENT
1.6 SUBMITTALS
1.7 ENVIRONMENTAL PROTECTION PLAN
1.7.1 Compliance
1.7.2 Contents
1.7.3 Appendix
1.8 PROTECTION FEATURES
1.9 OMITTED
1.10 ENVIRONMENTAL ASSESSMENT OF CONTRACT DEVIATIONS
1.11 NOTIFICATION

PART 2 PRODUCTS (NOT USED)

PART 3 EXECUTION

3.1 OMITTED
3.2 LAND RESOURCES
3.2.1 Work Area Limits
3.2.2 Landscape
3.2.3 Erosion and Sediment Controls
3.2.4 Contractor Facilities and Work Areas
3.3 WATER RESOURCES
3.3.1 Omitted
3.3.2 Omitted
3.4 AIR RESOURCES

3.4.1 Particulates
3.4.2 Odors
3.4.3 Sound Intrusions
3.4.4 Burning
3.5 OMITTED
3.6 CHEMICAL MATERIALS MANAGEMENT AND WASTE DISPOSAL
3.6.1 Solid Wastes
3.6.2 Chemicals and Chemical Wastes
3.6.3 Contractor Generated Hazardous Wastes/Excess Hazardous Materials
3.6.4 Fuel and Lubricants
3.6.5 Waste Water
3.7 RECYCLING AND WASTE MINIMIZATION
3.8 OMITTED
3.9 HISTORICAL, ARCHAEOLOGICAL, AND CULTURAL RESOURCES
3.10 BIOLOGICAL RESOURCES
3.11 INTEGRATED PEST MANAGEMENT
3.11.1 Pesticide Delivery and Storage
3.11.2 Qualifications
3.11.3 Pesticide Handling Requirements
3.11.4 Application
3.12 PREVIOUSLY USED EQUIPMENT
3.13 MAINTENANCE OF POLLUTION FACILITIES
3.14 MILITARY MUNITIONS
3.15 TRAINING OF CONTRACTOR PERSONNEL
3.16 OMITTED
3.17 POST CONSTRUCTION CLEANUP

-- End of Section Table of Contents --

CEGS-01355 (October 2000)

SECTION 01355

ENVIRONMENTAL PROTECTION
10/00

PART 1 GENERAL

1.1 REFERENCES

The publications listed below form a part of this specification to the extent referenced. The publications are referred to in the text by basic designation only.

AIR FORCE INSTRUCTION

AFI 32-1053	Pest Management Program

CODE OF FEDERAL REGULATIONS (CFR)

33 CFR 328	Definitions
40 CFR 68	Chemical Accident Prevention Provisions
40 CFR 152 - 186	Pesticide Programs
40 CFR 260	Hazardous Waste Management System: General
40 CFR 261	Identification and Listing of Hazardous Waste
40 CFR 262	Standards Applicable to Generators of Hazardous Waste
40 CFR 279	Standards for the Management of Used Oil
40 CFR 302	Designation, Reportable Quantities, and Notification
40 CFR 355	Emergency Planning and Notification
49 CFR 171 - 178	Hazardous Materials Regulations

ENGINEERING MANUALS (EM)

EM 385-1-1	(1996) U.S. Army Corps on Engineers Safety and Health Requirements Manual

US ARMY CORPS OF ENGINEERS TECHNICAL REPORT

WETLAND MANUAL	Corps of Engineers Wetlands Delineation Manual Technical Report Y-87-1

1.2 DEFINITIONS

1.2.1 Environmental Pollution and Damage

Environmental pollution and damage is the presence of chemical, physical, or biological elements or agents which adversely affect human health or welfare; unfavorably alter ecological balances of importance to human life; affect other species of importance to humankind; or degrade the environment aesthetically, culturally and/or historically.

1.2.2 Environmental Protection

Environmental protection is the prevention/control of pollution and habitat disruption that may occur to the environment during construction. The control of environmental pollution and damage requires consideration of land, water, and air; biological and cultural resources; and includes management of visual aesthetics; noise; solid, chemical, gaseous, and liquid waste; radiant energy and radioactive material as well as other pollutants.

1.2.3 Contractor Generated Hazardous Waste

Contractor generated hazardous waste means materials that, if abandoned or disposed of, may meet the definition of a hazardous waste. These waste streams would typically consist of material brought on site by the Contractor to execute work, but are not fully consumed during the course of construction. Examples include, but are not limited to, excess paint thinners (i.e. methyl ethyl ketone, toluene etc.), waste thinners,excess paints, excess solvents, waste solvents, and excess pesticides, and contaminated pesticide equipment rinse water.

1.2.4 Installation Pest Management Coordinator

Installation Pest Management Coordinator (IPMC) is the individual officially designated by the Installation Commander to oversee the Installation Pest Management Program and the Installation Pest Management Plan.

1.2.4 Omitted

1.2.5 Land Application for Discharge Water

The term "Land Application" for discharge water implies that the Contractor shall discharge water at a rate which allows the water to percolate into the soil. No sheeting action, soil erosion, discharge into storm sewers, discharge into defined drainage areas, or discharge into the "waters of the United States" shall occur. Land Application shall be in compliance with

all applicable Federal, State, and local laws and regulations.

1.2.6 Pesticide

Pesticide is defined as any substance or mixture of substances intended for preventing, destroying, repelling, or mitigating any pest, or intended for use as a plant regulator, defoliant or desiccant.

1.2.7 Pests

The term "pests" means arthropods, birds, rodents, nematodes, fungi, bacteria, viruses, algae, snails, marine borers, snakes, weeds and other organisms (except for human or animal disease-causing organisms) that adversely affect readiness, military operations, or the well-being of personnel and animals; attack or damage real property, supplies, equipment, or vegetation; or are otherwise undesirable.

1.2.8 Surface Discharge

The term "Surface Discharge" implies that the water is discharged with possible sheeting action and subsequent soil erosion may occur. Waters that are surface discharged may terminate in drainage ditches, storm sewers,creeks, and/or "waters of the United States" and would require a permit to discharge water from the governing agency.

1.2.9 Waters of the United States

All waters which are under the jurisdiction of the Clean Water Act, as defined in 33 CFR 328.

1.2.10 Wetlands

Wetlands means those areas that are inundated or saturated by surface or ground water at a frequency and duration sufficient to support, and that under normal circumstances do support, a prevalence of vegetation typically adapted for life in saturated soil conditions. Wetlands generally include swamps, marshes, and bogs. Official determination of whether or not an area is classified as a wetland must be done in accordance with WETLAND MANUAL.

1.3 GENERAL REQUIREMENTS

The Contractor shall minimize environmental pollution and damage that may occur as the result of construction operations. The environmental resources within the project boundaries and those affected outside the limits of permanent work shall be protected during the entire duration of this contract. The Contractor shall comply with all applicable environmental Federal, State, and local laws and regulations. The Contractor shall be responsible for any delays resulting from failure to comply with environmental laws and regulations.

1.4 SUBCONTRACTORS

The Contractor shall ensure compliance with this section by subcontractors.

1.5 PAYMENT

No separate payment will be made for work covered under this section. The Contractor shall be responsible for payment of fees associated with environmental permits, application, and/or notices obtained by the Contractor. All costs associated with this section shall be included in the contract price. The Contractor shall be responsible for payment of all fines/fees for violation or non-compliance with Federal, State, Regional and local laws and regulations.

1.6 SUBMITTALS

Government approval is required for submittals with a "G" designation; submittals not having a "G" designation are for information only. When used, a designation following the "G" designation identifies the office that will review the submittal for the Government. The following shall be submitted in accordance with Section 01330 SUBMITTAL PROCEDURES:

SD-01 Preconstruction Submittals

Environmental Protection Plan; G,RE

The environmental protection plan.

1.7 ENVIRONMENTAL PROTECTION PLAN

Prior to commencing construction activities or delivery of materials to the site, the Contractor shall submit an Environmental Protection Plan for review and approval by the Contracting Officer. The purpose of the Environmental Protection Plan is to present a comprehensive overview of known or potential environmental issues which the Contractor must address during construction. Issues of concern shall be defined within the Environmental Protection Plan as outlined in this section. The Contractor shall address each topic at a level of detail commensurate with the environmental issue and required construction task(s). Topics or issues which are not identified in this section, but which the Contractor considers necessary, shall be identified and discussed after those items formally identified in this section. Prior to submittal of the Environmental Protection Plan, the Contractor shall meet with the Contracting Officer for the purpose of discussing the implementation of the initial Environmental Protection Plan; possible subsequent additions and revisions to the plan including any reporting requirements; and methods for administration of the Contractor's Environmental Plans. The Environmental Protection Plan shall be current and maintained onsite by the Contractor.

1.7.1 Compliance

No requirement in this Section shall be construed as relieving the Contractor of any applicable Federal, State, and local environmental protection laws and regulations. During Construction, the Contractor shall be responsible for identifying, implementing, and submitting for approval any additional requirements to be included in the Environmental Protection Plan.

1.7.2 Contents

The environmental protection plan shall include, but shall not be limited to, the following:

a. Name(s) of person(s) within the Contractor's organization who is(are) responsible for ensuring adherence to the Environmental Protection Plan.

b. Name(s) and qualifications of person(s) responsible for manifesting hazardous waste to be removed from the site, if applicable.

c. Name(s) and qualifications of person(s) responsible for training the Contractor's environmental protection personnel.

d. Description of the Contractor's environmental protection personnel training program.

e. An erosion and sediment control plan which identifies the type and location of the erosion and sediment controls to be provided. The plan shall include monitoring and reporting requirements to assure that the control measures are in compliance with the erosion and sediment control plan, Federal, State, and local laws and regulations. A Storm Water Pollution Prevention Plan (SWPPP) may be substituted for this plan.

f. Drawings showing locations of proposed temporary excavations or embankments for haul roads, stream crossings, material storage areas, structures, sanitary facilities, and stockpiles of excess or spoil materials including methods to control runoff and to contain materials on the site.

g. Traffic control plans including measures to reduce erosion of temporary roadbeds by construction traffic, especially during wet weather. Plan shall include measures to minimize the amount of mud transported onto paved public roads by vehicles or runoff.

h. Work area plan showing the proposed activity in each portion of the area and identifying the areas of limited use or nonuse. Plan should include measures for marking the limits of use areas including methods for protection of features to be preserved within authorized work areas.

i. Drawing showing the location of borrow areas.

j. The Spill Control plan shall include the procedures, instructions, and reports to be used in the event of an unforeseen spill of a substance regulated by 40 CFR 68, 40 CFR 302, 40 CFR 355, and/or regulated under State or Local laws and regulations. The Spill Control Plan supplements the requirements of EM 385-1-1. This plan shall include as a minimum:

1. The name of the individual who will report any spills or hazardous substance releases and who will follow up with complete

documentation. This individual shall immediately notify the Contracting Officer and Facility Response Personnel in addition to the legally required Federal, State, and local reporting channels (including the National Response Center 1-800-424-8802) if a reportable quantity is released to the environment. The plan shall contain a list of the required reporting channels and telephone numbers.

2. The name and qualifications of the individual who will be responsible for implementing and supervising the containment and cleanup.

3. Training requirements for Contractor's personnel and methods of accomplishing the training.

4. A list of materials and equipment to be immediately available at the job site, tailored to cleanup work of the potential hazard(s) identified.

5. The names and locations of suppliers of containment materials and locations of additional fuel oil recovery, cleanup, restoration, and material-placement equipment available in case of an unforeseen spill emergency.

6. The methods and procedures to be used for expeditious contaminant cleanup.

k. A non-hazardous solid waste disposal plan identifying methods and locations for solid waste disposal including clearing debris. The plan shall include schedules for disposal. The Contractor shall identify any subcontractors responsible for the transportation and disposal of solid waste. Licenses or permits shall be submitted for solid waste disposal sites that are not a commercial operating facility. Evidence of the disposal facility's acceptance of the solid waste shall be attached to this plan during the construction. The Contractor shall attach a copy of each of the Non-hazardous Solid Waste Diversion Reports to the disposal plan. The report shall be submitted on the first working day after the first quarter that non-hazardous solid waste has been disposed and/or diverted and shall be for the previous quarter (e.g. the first working day of January, April, July, and October). The report shall indicate the total amount of waste generated and total amount of waste diverted in cubic yards or tons along with the percent that was diverted.

l. A recycling and solid waste minimization plan with a list of measures to reduce consumption of energy and natural resources. The plan shall detail the Contractor's actions to comply with and to participate in Federal, State, Regional, and local government sponsored recycling programs to reduce the volume of solid waste at the source.

m. An air pollution control plan detailing provisions to assure that dust, debris, materials, trash, etc., do not become air borne and travel off the project site.

n. A contaminant prevention plan that: identifies potentially hazardous substances to be used on the job site; identifies the intended actions to prevent introduction of such materials into the air, water, or ground; and details provisions for compliance with Federal, State, and local laws and regulations for storage and handling of these materials. In accordance with EM 385-1-1, a copy of the Material Safety Data Sheets (MSDS) and the maximum quantity of each hazardous material to be on site at any given time shall be included in the contaminant prevention plan. As new hazardous materials are brought on site or removed from the site, the plan shall be updated.

o. A waste water management plan that identifies the methods and procedures for management and/or discharge of waste waters which are directly derived from construction activities, such as concrete curing water, clean-up water, dewatering of ground water, disinfection water, hydrostatic test water, and water used in flushing of lines. If a settling/retention pond is required, the plan shall include the design of the pond including drawings, removal plan, and testing requirements for possible pollutants. If land application will be the method of disposal for the waste water, the plan shall include a sketch showing the location for land application along with a description of the pretreatment methods to be implemented. If surface discharge will be the method of disposal, a copy of the permit and associated documents shall be included as an attachment prior to discharging the waste water. If disposal is to a sanitary sewer, the plan shall include documentation that the Waste Water Treatment Plant Operator has approved the flow rate, volume, and type of discharge.

p. A historical, archaeological, cultural resources biological resources and wetlands plan that defines procedures for identifying and protecting historical, archaeological, cultural resources, biological resources and wetlands known to be on the project site: and/or identifies procedures to be followed if historical archaeological, cultural resources, biological resources and wetlands not previously known to be onsite or in the area are discovered during construction. The plan shall include methods to assure the protection of known or discovered resources and shall identify lines of communication between Contractor personnel and the Contracting Officer.

q. A pesticide treatment plan shall be included and updated, as information becomes available. The plan shall include: sequence of treatment, dates, times, locations, pesticide trade name, EPA registration numbers, authorized uses, chemical composition, formulation, original and applied concentration, application rates of active ingredient (i.e. pounds of active ingredient applied), equipment used for application and calibration of equipment. The Contractor is responsible for Federal, State, Regional and Local pest management record keeping and reporting requirements as well as any additional Installation Project Office specific requirements. The Contractor shall follow AFI 32-1053 Sections 3.4.13 and 3.4.14 for data required to be reported to the Installation.

1.7.3 Appendix

Copies of all environmental permits, permit application packages, approvals to construct, notifications, certifications, reports, and termination documents shall be attached,as an appendix, to the Environmental Protection Plan.

1.8 PROTECTION FEATURES

This paragraph supplements the Contract Clause PROTECTION OF EXISTING VEGETATION, STRUCTURES, EQUIPMENT, UTILITIES, AND IMPROVEMENTS. Prior to start of any onsite construction activities, the Contractor and the Contracting Officer shall make a joint condition survey. Immediately following the survey, the Contractor shall prepare a brief report including a plan describing the features requiring protection under the provisions of the Contract Clauses, which are not specifically identified on the drawings as environmental features requiring protection along with the condition of trees, shrubs and grassed areas immediately adjacent to the site of work and adjacent to the Contractor's assigned storage area and access route(s), as applicable. This survey report shall be signed by both the the Contractor and the Contracting Officer upon mutual agreement as to its accuracy and completeness. The Contractor shall protect those environmental features included in the survey report and any indicated on the drawings, regardless of interference which their preservation may cause to the Contractor's work under the contract.

1.9 OMITTED

1.10 ENVIRONMENTAL ASSESSMENT OF CONTRACT DEVIATIONS

Any deviations, requested by the Contractor, from the drawings,plans and specifications which may have an environmental impact will be subject to approval by the Contracting Officer and may require an extended review, processing, and approval time. The Contracting Officer reserves the right to disapprove alternate methods, even if they are more cost effective, if the Contracting Officer determines that the proposed alternate method will have an adverse environmental impact.

1.11 NOTIFICATION

The Contracting Officer will notify the Contractor in writing of any observed noncompliance with Federal, State or local environmental laws or regulations, permits, and other elements of the Contractor's Environmental Protection plan. The Contractor shall, after receipt of such notice, inform the Contracting Officer of the proposed corrective action and take such action when approved by the Contracting Officer. The Contracting Officer may issue an order stopping all or part of the work until satisfactory corrective action has been taken. No time extensions shall be granted or equitable adjustments allowed to the Contractor for any such suspensions. This is in addition to any other actions the Contracting Officer may take under the contract, or in accordance with the Federal Acquisition Regulation or Federal Law.

PART 2 PRODUCTS (NOT USED)

PART 3 EXECUTION

3.1 OMITTED

3.2 LAND RESOURCES

The Contractor shall confine all activities to areas defined by the drawings and specifications. Prior to the beginning of any construction, the Contractor shall identify any land resources to be preserved within the work area. Except in areas indicated on the drawings or specified to be cleared, the Contractor shall not remove, cut, deface, injure, or destroy land resources including trees, shrubs, vines, grasses, topsoil, and land forms without approval. No ropes, cables, or guys shall be fastened to or attached to any trees for anchorage unless specifically authorized. The Contractor shall provide effective protection for land and vegetation resources at all times as defined in the following subparagraphs. Stone, soil, or other materials displaced into uncleared areas shall be removed by the Contractor.

3.2.1 Work Area Limits

Prior to commencing construction activities, the Contractor shall mark the areas that need not be disturbed under this contract. Isolated areas within the general work area which are not to be disturbed shall be marked or fenced. Monuments and markers shall be protected before construction operations commence. Where construction operations are to be conducted during darkness, any markers shall be visible in the dark. The Contractor's personnel shall be knowledgeable of the purpose for marking and/or protecting particular objects.

3.2.2 Landscape

Trees, shrubs, vines, grasses, land forms and other landscape features indicated and defined on the drawings to be preserved shall be clearly identified by marking, fencing, or wrapping with boards, or any other approved techniques. The Contractor shall restore landscape features damaged or destroyed during construction operations outside the limits of the approved work area.

3.2.3 Erosion and Sediment Controls

The Contractor shall be responsible for providing erosion and sediment control measures in accordance with Federal, State, and local laws and regulations. The erosion and sediment controls selected and maintained by the Contractor shall be such that water quality standards are not violated as a result of the Contractor's construction activities. The area of bare soil exposed at any one time by construction operations should be kept to a minimum. The Contractor shall construct or install temporary and permanent erosion and sediment control best management practices (BMPs) as indicated on the drawings. BMPs may include, but not be limited to, vegetation cover, stream bank stabilization, slope stabilization, silt fences, construction of terraces, interceptor channels, sediment traps, inlet and outfall protection, diversion channels, and sedimentation basins. Any temporary measures shall be removed after the area has been stabilized.

3.2.4 Contractor Facilities and Work Areas

The Contractor's field offices, staging areas, stockpile storage, and temporary buildings shall be placed in areas designated on the drawings or as directed by the Contracting Officer. Temporary movement or relocation of Contractor facilities shall be made only when approved. Erosion and sediment controls shall be provided for on-site borrow and spoil areas to prevent sediment from entering nearby waters. Temporary excavation and embankments for plant and/or work areas shall be controlled to protect adjacent areas.

3.3 WATER RESOURCES

The Contractor shall monitor construction activities to prevent pollution of surface and ground waters. Toxic or hazardous chemicals shall not be applied to soil or vegetation unless otherwise indicated. All water areas affected by construction activities shall be monitored by the Contractor. For construction activities immediately adjacent to impaired surface waters, the Contractor shall be capable of quantifying sediment or pollutant loading to that surface water when required by State or Federally issued Clean Water Act permits.

3.3.1 Omitted
3.3.2 Omitted

3.4 AIR RESOURCES

Equipment operation, activities, or processes performed by the Contractor shall be in accordance with all Federal and State air emission and performance laws and standards.

3.4.1 Particulates

Dust particles; aerosols and gaseous by-products from construction activities; and processing and preparation of materials, such as from asphaltic batch plants; shall be controlled at all times, including weekends, holidays and hours when work is not in progress. The Contractor shall maintain excavations, stockpiles, haul roads, permanent and temporary access roads, plant sites, spoil areas, borrow areas, and other work areas within or outside the project boundaries free from particulates which would cause the Federal, State, and local air pollution standards to be exceeded or which would cause a hazard or a nuisance. Sprinkling, chemical treatment of an approved type, baghouse, scrubbers, electrostatic precipitators or other methods will be permitted to control particulates in the work area. Sprinkling, to be efficient, must be repeated to keep the disturbed area damp at all times. The Contractor must have sufficient, competent equipment available to accomplish these tasks. Particulate control shall be performed as the work proceeds and whenever a particulate nuisance or hazard occurs. The Contractor shall comply with all State and local visibility regulations.

3.4.2 Odors

Odors from construction activities shall be controlled at all times. The

odors shall not cause a health hazard and shall be in compliance with State regulations and/or local ordinances.

3.4.3 Sound Intrusions

The Contractor shall keep construction activities under surveillance and control to minimize environment damage by noise. The Contractor shall comply with the provisions of the State of North Carolina rules.

3.4.4 Burning

Burning shall be prohibited on the Government premises.

3.5 OMITTED

3.6 CHEMICAL MATERIALS MANAGEMENT AND WASTE DISPOSAL

Disposal of wastes shall be as directed below, unless otherwise specified in other sections and/or shown on the drawings.

3.6.1 Solid Wastes

Solid wastes (excluding clearing debris) shall be placed in containers which are emptied on a regular schedule. Handling, storage, and disposal shall be conducted to prevent contamination. Segregation measures shall be employed so that no hazardous or toxic waste will become co-mingled with solid waste.

3.6.2 Chemicals and Chemical Wastes

Chemicals shall be dispensed ensuring no spillage to the ground or water. Periodic inspections of dispensing areas to identify leakage and initiate corrective action shall be performed and documented. This documentation will be periodically reviewed by the Government. Chemical waste shall be collected in corrosion resistant, compatible containers. Collection drums shall be monitored and removed to a staging or storage area when contents are within 6 inches of the top. Wastes shall be classified, managed, stored, and disposed of in accordance with Federal, State, and local laws and regulations.

3.6.3 Contractor Generated Hazardous Wastes/Excess Hazardous Materials

Hazardous wastes are defined in 40 CFR 261, or are as defined by applicable State and local regulations. Hazardous materials are defined in 49 CFR 171 - 178. The Contractor shall, at a minimum, manage and store hazardous waste in compliance with 40 CFR 262 and shall manage and store hazardous waste in accordance with the Installation hazardous waste management plan. The Contractor shall take sufficient measures to prevent spillage of hazardous and toxic materials during dispensing. The Contractor shall segregate hazardous waste from other materials and wastes, shall protect it from the weather by placing it in a safe covered location, and shall take precautionary measures such as berming or other appropriate measures against accidental spillage. The Contractor shall be responsible for storage, describing, packaging, labeling, marking, and placarding of

hazardous waste and hazardous material in accordance with 49 CFR 171 - 178, State, and local laws and regulations. The Contractor shall transport Contractor generated hazardous waste off Government property within 60 days in accordance with the Environmental Protection Agency and the Department of Transportation laws and regulations. The Contractor shall dispose of hazardous waste in compliance with Federal, State and local laws and regulations. Spills of hazardous or toxic materials shall be immediately reported to the Contracting Officer and the Facility Environmental Office. Cleanup and cleanup costs due to spills shall be the Contractor's responsibility. The disposition of Contractor generated hazardous waste and excess hazardous materials are the Contractor's responsibility. The Contractor shall coordinate the disposition of hazardous waste with the Facility's Hazardous Waste Manager and the Contracting Officer.

3.6.4 Fuel and Lubricants

Storage, fueling and lubrication of equipment and motor vehicles shall be conducted in a manner that affords the maximum protection against spill and evaporation. Fuel, lubricants and oil shall be managed and stored in accordance with all Federal, State, Regional, and local laws and regulations. Used lubricants and used oil to be discarded shall be stored in marked corrosion-resistant containers and recycled or disposed in accordance with 40 CFR 279, State, and local laws and regulations. There shall be no storage of fuel on the project site. Fuel must be brought to the project site each day that work is performed.

3.6.5 Waste Water

Disposal of waste water shall be as specified below.

a. Waste water from construction activities, such as onsite material processing, concrete curing, foundation and concrete clean-up, water used in concrete trucks, forms, etc. shall not be allowed to enter water ways or to be discharged prior to being treated to remove pollutants. The Contractor shall dispose of the construction related waste water off-Government property in accordance with all Federal, State, Regional and Local laws and regulations or by collecting and placing it in a retention pond where suspended material can be settled out and/or the water can evaporate to separate pollutants from the water. The site for the retention pond shall be coordinated and approved with the Contracting Officer. The residue left in the pond prior to completion of the project shall be removed, tested, and disposed off-Government property in accordance with Federal, State, and local laws and regulations. The area shall be backfilled to the original grade, top-soiled and seeded/sodded.

b. For discharge of ground water, the Contractor shall surface discharge in accordance with all Federal, State, and local laws and regulations.

c. Water generated from the flushing of lines after disinfection or disinfection in conjunction with hydrostatic testing shall be land applied in accordance with all Federal, State, and local laws and

regulations for land application.

3.7 RECYCLING AND WASTE MINIMIZATION

The Contractor shall participate in State and local government sponsored recycling programs. The Contractor is further encouraged to minimize solid waste generation throughout the duration of the project.

3.8 OMITTED

3.9 HISTORICAL, ARCHAEOLOGICAL, AND CULTURAL RESOURCES

If during excavation or other construction activities any previously unidentified or unanticipated historical, archaeological, and cultural resources are discovered or found, all activities that may damage or alter such resources shall be temporarily suspended. Resources covered by this paragraph include but are not limited to: any human skeletal remains or burials; artifacts; shell, midden, bone, charcoal, or other deposits; rock or coral alignments, pavings, wall, or other constructed features; and any indication of agricultural or other human activities. Upon such discovery or find, the Contractor shall immediately notify the Contracting Officer so that the appropriate authorities may be notified and a determination made as to their significance and what, if any, special disposition of the finds should be made. The Contractor shall cease all activities that may result in impact to or the destruction of these resources. The Contractor shall secure the area and prevent employees or other persons from trespassing on, removing, or otherwise disturbing such resources.

3.10 BIOLOGICAL RESOURCES

The Contractor shall minimize interference with, disturbance to, and damage to fish, wildlife, and plants including their habitat. The Contractor shall be responsible for the protection of threatened and endangered animal and plant species including their habitat in accordance with Federal, State, Regional, and local laws and regulations.

3.11 INTEGRATED PEST MANAGEMENT

In order to minimize impacts to existing fauna and flora, the Contractor, through the Contracting Officer, shall coordinate with the Installation Pest Management Coordinator (IPMC) at the earliest possible time prior to pesticide application. The Contractor shall discuss integrated pest management strategies with the IPMC and receive concurrence from the IPMC through the COR prior to the application of any pesticide associated with these specifications. Installation Project Office Pest Management personnel shall be given the opportunity to be present at all meetings concerning treatment measures for pest or disease control and during application of the pesticide. For termiticide requirements see Section 02364 TERMITICIDE TREATMENT MEASURES FOR SUBTERRANEAN TERMITE CONTROL. The use and management of pesticides are regulated under 40 CFR 152 - 186.

3.11.1 Pesticide Delivery and Storage

Pesticides shall be delivered to the site in the original, unopened

containers bearing legible labels indicating the EPA registration number and the manufacturer's registered uses. Pesticides shall be stored according to manufacturer's instructions and under lock and key when unattended.

3.11.2 Qualifications

For the application of pesticides, the Contractor shall use the services of a subcontractor whose principal business is pest control. The subcontractor shall be licensed and certified in the state where the work is to be performed.

3.11.3 Pesticide Handling Requirements

The Contractor shall formulate, treat with, and dispose of pesticides and associated containers in accordance with label directions and shall use the clothing and personal protective equipment specified on the labeling for use during all phases of the application. Material Safety Data Sheets (MSDS)shall be available for all pesticide products.

3.11.4 Application

Pesticides shall be applied by a State Certified Pesticide Applicator in accordance with EPA label restrictions and recommendation. The Certified Applicator shall wear clothing and personal protective equipment as specified on the pesticide label. Water used for formulating shall only come from locations designated by the Contracting Officer. The Contractor shall not allow the equipment to overflow. Prior to application of pesticide, all equipment shall be inspected for leaks, clogging, wear, or damage and shall be repaired prior to being used.

3.12 PREVIOUSLY USED EQUIPMENT

The Contractor shall clean all previously used construction equipment prior to bringing it onto the project site. The Contractor shall ensure that the equipment is free from soil residuals, egg deposits from plant pests, noxious weeds, and plant seeds. The Contractor shall consult with the USDA jurisdictional office for additional cleaning requirements.

3.13 MAINTENANCE OF POLLUTION FACILITIES

The Contractor shall maintain permanent and temporary pollution control facilities and devices for the duration of the contract or for that length of time construction activities create the particular pollutant.

3.14 MILITARY MUNITIONS

In the event the Contractor discovers or uncovers military munitions as defined in 40 CFR 260, the Contractor shall immediately stop work in that area and immediately inform the Contracting Officer.

3.15 TRAINING OF CONTRACTOR PERSONNEL

The Contractor's personnel shall be trained in all phases of environmental

protection and pollution control. The Contractor shall conduct environmental protection/pollution control meetings for all Contractor personnel prior to commencing construction activities. Additional meetings shall be conducted for new personnel and when site conditions change. The training and meeting agenda shall include: methods of detecting and avoiding pollution; familiarization with statutory and contractual pollution standards; installation and care of devices, vegetative covers, and instruments required for monitoring purposes to ensure adequate and continuous environmental protection/pollution control; anticipated hazardous or toxic chemicals or wastes, and other regulated contaminants; recognition and protection of archaeological sites, artifacts, wetlands, and endangered species and their habitat that are known to be in the area.

3.16 OMITTED

3.17 POST CONSTRUCTION CLEANUP

The Contractor shall clean up all areas used for construction in accordance with Contract Clause: "Cleaning Up". The Contractor shall, unless otherwise instructed in writing by the Contracting Officer, obliterate all signs of temporary construction facilities such as haul roads, work area, structures, foundations of temporary structures, stockpiles of excess or waste materials, and other vestiges of construction prior to final acceptance of the work. The disturbed area shall be graded, filled and the entire area seeded unless otherwise indicated.

-- End of Section --

SECTION TABLE OF CONTENTS

DIVISION 01 - GENERAL REQUIREMENTS

SECTION 01451

CONTRACTOR QUALITY CONTROL

04/97

PART 1 GENERAL

1.1 REFERENCES
1.2 PAYMENT

PART 2 PRODUCTS (Not Applicable)

PART 3 EXECUTION

3.1 GENERAL REQUIREMENTS
3.2 QUALITY CONTROL PLAN
3.2.1 Content of the CQC Plan
3.2.2 Acceptance of Plan
3.2.3 Notification of Changes
3.3 COORDINATION MEETING
3.4 QUALITY CONTROL ORGANIZATION
3.4.1 Personnel Requirements
3.4.2 CQC System Manager
3.4.3 CQC Personnel
3.4.4 Additional Requirement
3.4.5 Organizational Changes
3.5 SUBMITTALS AND DELIVERABLES
3.6 CONTROL
3.6.1 Preparatory Phase
3.6.2 Initial Phase
3.6.3 Follow-up Phase
3.6.4 Additional Preparatory and Initial Phases
3.7 TESTS
3.7.1 Testing Procedure
3.7.2 Testing Laboratories
3.7.2.1 Capability Check
3.7.2.2 Capability Recheck
3.7.3 Onsite Laboratory
3.7.4 Furnishing or Transportation of Samples for Testing
3.8 COMPLETION INSPECTION
3.8.1 Punch-Out Inspection
3.8.2 Pre-Final Inspection
3.8.3 Final Acceptance Inspection
3.9 DOCUMENTATION
3.10 SAMPLE FORMS
3.11 NOTIFICATION OF NONCOMPLIANCE

-- End of Section Table of Contents --

CEGS-01451/S (April 1997)

Includes changes through Notice 3 (May 2000)

SECTION 01451

CONTRACTOR QUALITY CONTROL
04/97

PART 1 GENERAL

1.1 REFERENCES

The publications listed below form a part of this specification to the extent referenced. The publications are referred to in the text by basic designation only.

AMERICAN SOCIETY FOR TESTING AND MATERIALS (ASTM)

ASTM D 3740	(1999b) Minimum Requirements for Agencies Engaged in the Testing and/or Inspection of Soil and Rock as Used in Engineering Design and Construction
ASTM E 329	(1998a) Agencies Engaged in the Testing and/or Inspection of Materials Used in Construction

1.2 PAYMENT

Separate payment will not be made for providing and maintaining an effective Quality Control program, and all costs associated therewith shall be included in the applicable unit prices or lump-sum prices contained in the Bidding Schedule.

PART 2 PRODUCTS (Not Applicable)

PART 3 EXECUTION

3.1 GENERAL REQUIREMENTS

The Contractor is responsible for quality control and shall establish and maintain an effective quality control system in compliance with the Contract Clause titled "Inspection of Construction." The quality control system shall consist of plans, procedures, and organization necessary to produce an end product which complies with the contract requirements. The system shall cover all construction operations, both onsite and offsite, and shall be keyed to the proposed construction sequence. The site project superintendent will be held responsible for the quality of work on the job and is subject to removal by the Contracting Officer for non-compliance with the quality requirements specified in the contract. The site project

superintendent in this context shall be the highest level manager responsible for the overall construction activities at the site, including quality and production. The site project superintendent shall maintain a physical presence at the site at all times, except as otherwise acceptable to the Contracting Officer, and shall be responsible for all construction and construction related activities at the site.

3.2 QUALITY CONTROL PLAN

The Contractor shall furnish for review by the Government, not later than 5 days after receipt of notice to proceed, the Contractor Quality Control (CQC) Plan proposed to implement the requirements of the Contract Clause titled "Inspection of Construction." The plan shall identify personnel, procedures, control, instructions, tests, records, and forms to be used. The Government will consider an interim plan for the first 30 days of operation. Construction will be permitted to begin only after acceptance of the CQC Plan or acceptance of an interim plan applicable to the particular feature of work to be started. Work outside of the features of work included in an accepted interim plan will not be permitted to begin until acceptance of a CQC Plan or another interim plan containing the additional features of work to be started.

3.2.1 Content of the CQC Plan

The CQC Plan shall include, as a minimum, the following to cover all construction operations, both onsite and offsite, including work by subcontractors, fabricators, suppliers, and purchasing agents:

a. A description of the quality control organization, including a chart showing lines of authority and acknowledgment that the CQC staff shall implement the three phase control system for all aspects of the work specified. The staff shall include a CQC System Manager who shall report to the project superintendent.

b. The name, qualifications (in resume format), duties, responsibilities, and authorities of each person assigned a CQC function.

c. A copy of the letter to the CQC System Manager signed by an authorized official of the firm which describes the responsibilities and delegates sufficient authorities to adequately perform the functions of the CQC System Manager, including authority to stop work which is not in compliance with the contract. The CQC System Manager shall issue letters of direction to all other various quality control representatives outlining duties, authorities, and responsibilities. Copies of these letters shall also be furnished to the Government.

d. Procedures for scheduling, reviewing, certifying, and managing submittals, including those of subcontractors, offsite fabricators, suppliers, and purchasing agents. These procedures shall be in accordance with Section 01330 SUBMITTAL PROCEDURES.

e. Control, verification, and acceptance testing procedures for each

specific test to include the test name, specification paragraph requiring test, feature of work to be tested, test frequency, and person responsible for each test. (Laboratory facilities will be approved by the Contracting Officer.)

f. Procedures for tracking preparatory, initial, and follow-up control phases and control, verification, and acceptance tests including documentation.

g. Procedures for tracking construction deficiencies from identification through acceptable corrective action. These procedures shall establish verification that identified deficiencies have been corrected.

h. Reporting procedures, including proposed reporting formats.

i. A list of the definable features of work. A definable feature of work is a task which is separate and distinct from other tasks, has separate control requirements, and may be identified by different trades or disciplines, or it may be work by the same trade in a different environment. Although each section of the specifications may generally be considered as a definable feature of work, there are frequently more than one definable features under a particular section. This list will be agreed upon during the coordination meeting.

3.2.2 Acceptance of Plan

Acceptance of the Contractor's plan is required prior to the start of construction. Acceptance is conditional and will be predicated on satisfactory performance during the construction. The Government reserves the right to require the Contractor to make changes in his CQC Plan and operations including removal of personnel, as necessary, to obtain the quality specified.

3.2.3 Notification of Changes

After acceptance of the CQC Plan, the Contractor shall notify the Contracting Officer in writing of any proposed change. Proposed changes are subject to acceptance by the Contracting Officer.

3.3 COORDINATION MEETING

After the Preconstruction Conference, before start of construction, and prior to acceptance by the Government of the CQC Plan, the Contractor shall meet with the Contracting Officer or Authorized Representative and discuss the Contractor's quality control system. The CQC Plan shall be submitted for review a minimum of 7 calendar days prior to the Coordination Meeting. During the meeting, a mutual understanding of the system details shall be developed, including the forms for recording the CQC operations, control activities, testing, administration of the system for both onsite and offsite work, and the interrelationship of Contractor's Management and control with the Government's Quality Assurance. Minutes of the meeting shall be prepared by the Government and signed by both the Contractor and

the Contracting Officer. The minutes shall become a part of the contract file. There may be occasions when subsequent conferences will be called by either party to reconfirm mutual understandings and/or address deficiencies in the CQC system or procedures which may require corrective action by the Contractor.

3.4 QUALITY CONTROL ORGANIZATION

3.4.1 Personnel Requirements

The requirements for the CQC organization are a CQC System Manager and sufficient number of additional qualified personnel to ensure safety and contract compliance. The Safety and Health Manager shall receive direction and authority from the CQC System Manager and shall serve as a member of the CQC staff. Personnel identified in the technical provisions as requiring specialized skills to assure the required work is being performed properly will also be included as part of the CQC organization.The Contractor's CQC staff shall maintain a presence at the site at all times during progress of the work and have complete authority and responsibility to take any action necessary to ensure contract compliance. The CQC staff shall be subject to acceptance by the Contracting Officer. The Contractor shall provide adequate office space, filing systems and other resources as necessary to maintain an effective and fully functional CQC organization. Complete records of all letters, material submittals, show drawing submittals, schedules and all other project documentation shall be promptly furnished to the CQC organization by the Contractor. The CQC organization shall be responsible to maintain these documents and records at the site at all times, except as otherwise acceptable to the Contracting Officer.

3.4.2 CQC System Manager

The Contractor shall identify as CQC System Manager an individual within the onsite work organization who shall be responsible for overall management of CQC and have the authority to act in all CQC matters for the Contractor. The CQC System Manager shall be a graduate engineer or a graduate of construction management, with a minimum of 5 years construction experience on construction similar to this contract or a construction person with a minimum of 10 years in related work. This CQC System Manager shall be on the site at all times during construction and shall be employed by the prime Contractor. The CQC System Manager shall be assigned no other duties. The CQC System Manager shall have expertise in the civil and architectural construction areas. An alternate for the CQC System Manager shall be identified in the plan to serve in the event of the System Manager's absence. The requirements for the alternate shall be the same as for the designated CQC System Manager.

3.4.3 CQC Personnel

In addition to CQC personnel specified elsewhere in the contract, the Contractor shall provide as part of the CQC organization specialized personnel to assist the CQC System Manager for the following areas: electrical and mechanical. These individuals may be employees of the prime or subcontractor; be responsible to the CQC System Manager; be physically present at the construction site during work on their areas of

responsibility; have the necessary education and/or experience in accordance with the experience matrix listed herein. These individuals may perform other duties but must be allowed sufficient time to perform their assigned quality control duties as described in the Quality Control Plan. These individuals shall be physically present at the construction site during work on their areas of responsibility, or no later than 60 days after Notice to Proceed, whichever is earlier.

Experience Matrix

	Area	Qualifications
a.	Civil	Graduate Civil Engineer with 5 years experience in the type of work being performed on this project or technician with 10 yrs related experience
b.	Mechanical	Graduate Mechanical Engineer with 5 yrs experience or person with 10 yrs related experience
c.	Electrical	Graduate Electrical Engineer with 5 yrs related experience or person with 10 yrs related experience
d.	Architectural	Graduate Architect with 5 yrs experience or person with 10 yrs related experience

3.4.4 Additional Requirement

In addition to the above experience and education requirements the CQC System Manager shall have completed the course entitled "Construction Quality Management For Contractors". This course is offered on a quarterly basis within the Savannah District boundaries. CQC System Managers who have not successfully completed this course must attend the next available training session. Failure to successfully complete this training within the next available training date will be grounds for removal as CQC System Manager. There is currently a nominal fee to cover the cost of the training materials for Contractors who have current contracts with the Savannah District.

3.4.5 Organizational Changes

The Contractor shall maintain the CQC staff at full strength at all times. When it is necessary to make changes to the CQC staff, the Contractor shall revise the CQC Plan to reflect the changes and submit the changes to the Contracting Officer for acceptance.

3.5 SUBMITTALS AND DELIVERABLES

Submittals, if needed, shall be made as specified in Section 01330 SUBMITTAL PROCEDURES. The CQC organization shall be responsible for certifying that all submittals and deliverables are in compliance with the contract requirements.

3.6 CONTROL

Contractor Quality Control is the means by which the Contractor ensures that the construction, to include that of subcontractors and suppliers, complies with the requirements of the contract. At least three phases of control shall be conducted by the CQC System Manager for each definable feature of work as follows:

3.6.1 Preparatory Phase

This phase shall be performed prior to beginning work on each definable feature of work, after all required plans/documents/materials are approved/accepted, and after copies are at the work site. This phase shall include:

a. A review of each paragraph of applicable specifications, reference codes, and standards. A copy of those sections of referenced codes and standards applicable to that portion of the work to be accomplished in the field shall be made available by the Contractor at the preparatory inspection. These copies shall be maintained in the field and available for use by Government personnel until final acceptance of the work.

b. A review of the contract drawings.

c. A check to assure that all materials and/or equipment have been tested, submitted, and approved.

d. Review of provisions that have been made to provide required control inspection and testing.

e. Examination of the work area to assure that all required preliminary work has been completed and is in compliance with the contract.

f. A physical examination of required materials, equipment, and sample work to assure that they are on hand, conform to approved shop drawings or submitted data, and are properly stored.

g. A review of the appropriate activity hazard analysis to assure safety requirements are met.

h. Discussion of procedures for controlling quality of the work including repetitive deficiencies. Document construction tolerances and workmanship standards for that feature of work.

i. A check to ensure that the portion of the plan for the work to be

performed has been accepted by the Contracting Officer.

j. Discussion of the initial control phase.

k. The Government shall be notified at least 48 hours in advance of beginning the preparatory control phase. This phase shall include a meeting conducted by the CQC System Manager and attended by the superintendent, other CQC personnel (as applicable), and the foreman responsible for the definable feature. The results of the preparatory phase actions shall be documented by separate minutes prepared by the CQC System Manager and attached to the daily CQC report. The Contractor shall instruct applicable workers as to the acceptable level of workmanship required in order to meet contract specifications.

3.6.2 Initial Phase

This phase shall be accomplished at the beginning of a definable feature of work. The following shall be accomplished:

a. A check of work to ensure that it is in full compliance with contract requirements. Review minutes of the preparatory meeting.

b. Verify adequacy of controls to ensure full contract compliance. Verify required control inspection and testing.

c. Establish level of workmanship and verify that it meets minimum acceptable workmanship standards. Compare with required sample panels as appropriate.

d. Resolve all differences.

e. Check safety to include compliance with and upgrading of the safety plan and activity hazard analysis. Review the activity analysis with each worker.

f. The Government shall be notified at least 24 hours in advance of beginning the initial phase. Separate minutes of this phase shall be prepared by the CQC System Manager and attached to the daily CQC report. Exact location of initial phase shall be indicated for future reference and comparison with follow-up phases.

g. The initial phase should be repeated for each new crew to work onsite, or any time acceptable specified quality standards are not being met.

3.6.3 Follow-up Phase

Daily checks shall be performed to assure control activities, including control testing, are providing continued compliance with contract requirements, until completion of the particular feature of work. The checks shall be made a matter of record in the CQC documentation. Final follow-up checks shall be conducted and all deficiencies corrected prior to the start of additional features of work which may be affected by the

deficient work. The Contractor shall not build upon nor conceal non-conforming work.

3.6.4 Additional Preparatory and Initial Phases

Additional preparatory and initial phases shall be conducted on the same definable features of work if: the quality of on-going work is unacceptable; if there are changes in the applicable CQC staff, onsite production supervision or work crew; if work on a definable feature is resumed after a substantial period of inactivity; or if other problems develop.

3.7 TESTS

3.7.1 Testing Procedure

The Contractor shall perform specified or required tests to verify that control measures are adequate to provide a product which conforms to contract requirements. Upon request, the Contractor shall furnish to the Government duplicate samples of test specimens for possible testing by the Government. Testing includes operation and/or acceptance tests when specified. The Contractor shall procure the services of a Corps of Engineers approved testing laboratory or establish an approved testing laboratory at the project site. The Contractor shall perform the following activities and record and provide the following data:

a. Verify that testing procedures comply with contract requirements.

b. Verify that facilities and testing equipment are available and comply with testing standards.

c. Check test instrument calibration data against certified standards.

d. Verify that recording forms and test identification control number system, including all of the test documentation requirements, have been prepared.

e. Results of all tests taken, both passing and failing tests, shall be recorded on the CQC report for the date taken. Specification paragraph reference, location where tests were taken, and the sequential control number identifying the test shall be given. If approved by the Contracting Officer, actual test reports may be submitted later with a reference to the test number and date taken. An information copy of tests performed by an offsite or commercial test facility shall be provided directly to the Contracting Officer. Failure to submit timely test reports as stated may result in nonpayment for related work performed and disapproval of the test facility for this contract.

3.7.2 Testing Laboratories

3.7.2.1 Capability Check

The Government reserves the right to check laboratory equipment in the

proposed laboratory for compliance with the standards set forth in the contract specifications and to check the laboratory technician's testing procedures and techniques. Laboratories utilized for testing soils, concrete, asphalt, and steel shall meet criteria detailed in ASTM D 3740 and ASTM E 329.

3.7.2.2 Capability Recheck

If the selected laboratory fails the capability check, the Contractor will be assessed a charge to reimburse the Government for each succeeding recheck of the laboratory or the checking of a subsequently selected laboratory. Such costs will be deducted from the contract amount due the Contractor.

3.7.3 Onsite Laboratory

The Government reserves the right to utilize the Contractor's control testing laboratory and equipment to make assurance tests, and to check the Contractor's testing procedures, techniques, and test results at no additional cost to the Government.

3.7.4 Furnishing or Transportation of Samples for Testing

Costs incidental to the transportation of samples or materials shall be borne by the Contractor. Samples of materials for test verification and acceptance testing by the Government shall be delivered to the following address:

US Army Engineer District, Savannah
Environmental & Materials Unit
200 North Cobb Parkway
Building 400, Suite 404
Marietta, GA 30062

Coordination for each specific test will be made through the Area Office.

3.8 COMPLETION INSPECTION

3.8.1 Punch-Out Inspection

Near the end of the work, or any increment of the work established by a time stated in the Special Clause, "Commencement, Prosecution, and Completion of Work", or by the specifications, the CQC Manager shall conduct an inspection of the work. A punch list of items which do not conform to the approved drawings and specifications shall be prepared and included in the CQC documentation, as required by paragraph DOCUMENTATION. The list of deficiencies shall include the estimated date by which the deficiencies will be corrected. The CQC System Manager or staff shall make a second inspection to ascertain that all deficiencies have been corrected. Once this is accomplished, the Contractor shall notify the Government that the facility is ready for the Government Pre-Final inspection.

3.8.2 Pre-Final Inspection

The Government will perform the pre-final inspection to verify that the facility is complete and ready to be occupied. A Government Pre-Final Punch List may be developed as a result of this inspection. The Contractor's CQC System Manager shall ensure that all items on this list have been corrected before notifying the Government, so that a Final inspection with the customer can be scheduled. Any items noted on the Pre-Final inspection shall be corrected in a timely manner. These inspections and any deficiency corrections required by this paragraph shall be accomplished within the time slated for completion of the entire work or any particular increment of the work if the project is divided into increments by separate completion dates.

3.8.3 Final Acceptance Inspection

The Contractor's Quality Control Inspection personnel, plus the superintendent or other primary management person, and the Contracting Officer's Representative shall be in attendance at the final acceptance inspection. Additional Government personnel including, but not limited to, those from Base/Post Civil Facility Engineer user groups, and major commands may also be in attendance. The final acceptance inspection will be formally scheduled by the Contracting Officer based upon results of the Pre-Final inspection. Notice shall be given to the Contracting Officer at least 14 days prior to the final acceptance inspection and shall include the Contractor's assurance that all specific items previously identified to the Contractor as being unacceptable, along with all remaining work performed under the contract, will be complete and acceptable by the date scheduled for the final acceptance inspection. Failure of the Contractor to have all contract work acceptably complete for this inspection will be cause for the Contracting Officer to bill the Contractor for the Government's additional inspection cost in accordance with the contract clause titled "Inspection of Construction".

3.9 DOCUMENTATION

The Contractor shall maintain current records providing factual evidence that required quality control activities and/or tests have been performed. These records shall include the work of subcontractors and suppliers and shall be on an acceptable form that includes, as a minimum, the following information:

a. Contractor/subcontractor and their area of responsibility.

b. Operating plant/equipment with hours worked, idle, or down for repair.

c. Work performed each day, giving location, description, and by whom. When Network Analysis (NAS) is used, identify each phase of work performed each day by NAS activity number.

d. Test and/or control activities performed with results and references to specifications/drawings requirements. The control phase shall be identified (Preparatory, Initial, Follow-up). List of deficiencies noted, along with corrective action.

e. Quantity of materials received at the site with statement as to acceptability, storage, and reference to specifications/drawings requirements.

f. Submittals and deliverables reviewed, with contract reference, by whom, and action taken.

g. Offsite surveillance activities, including actions taken.

h. Job safety evaluations stating what was checked, results, and instructions or corrective actions.

i. Instructions given/received and conflicts in plans and/or specifications.

j. Contractor's verification statement.

These records shall indicate a description of trades working on the project; the number of personnel working; weather conditions encountered; and any delays encountered. These records shall cover both conforming and deficient features and shall include a statement that equipment and materials incorporated in the work and workmanship comply with the contract. The original and one copy of these records in report form shall be furnished to the Government daily within 24 hours after the date covered by the report, except that reports need not be submitted for days on which no work is performed. As a minimum, one report shall be prepared and submitted for every 7 days of no work and on the last day of a no work period. All calendar days shall be accounted for throughout the life of the contract. The first report following a day of no work shall be for that day only. Reports shall be signed and dated by the CQC System Manager. The report from the CQC System Manager shall include copies of test reports and copies of reports prepared by all subordinate quality control personnel.

3.10 SAMPLE FORMS

Sample forms are included in Attachment 1 to Section 00800.

3.11 NOTIFICATION OF NONCOMPLIANCE

The Contracting Officer will notify the Contractor of any detected noncompliance with the foregoing requirements. The Contractor shall take immediate corrective action after receipt of such notice. Such notice, when delivered to the Contractor at the work site, shall be deemed sufficient for the purpose of notification. If the Contractor fails or refuses to comply promptly, the Contracting Officer may issue an order stopping all or part of the work until satisfactory corrective action has been taken. No part of the time lost due to such stop orders shall be made the subject of claim for extension of time or for excess costs or damages by the Contractor.

-- End of Section --

SECTION TABLE OF CONTENTS

DIVISION 01 - GENERAL REQUIREMENTS

SECTION 01500

TEMPORARY CONSTRUCTION FACILITIES

02/97

PART 1 GENERAL

1.1 GENERAL REQUIREMENTS
1.1.1 Site Plan
1.1.2 Identification of Employees
1.1.3 Employee Parking
1.2 AVAILABILITY AND USE OF UTILITY SERVICES
1.2.1 Payment for Utility Services
1.2.2 Meters and Temporary Connections
1.2.3 Advance Deposit
1.2.4 Final Meter Reading
1.2.5 Sanitation
1.2.6 Telephone
1.3 BULLETIN BOARD, PROJECT SIGN, AND PROJECT SAFETY SIGN
1.3.1 Bulletin Board
1.3.2 Project Signs
1.4 PROTECTION AND MAINTENANCE OF TRAFFIC
1.4.1 Haul Roads
1.4.2 Barricades
1.5 CONTRACTOR'S TEMPORARY FACILITIES
1.5.1 Administrative Field Offices
1.5.2 Storage Area
1.5.3 Supplemental Storage Area
1.5.4 Appearance of Trailers
1.5.5 Maintenance of Storage Area
1.5.6 New Building
1.5.7 Security Provisions
1.6 PLANT COMMUNICATION
1.7 TEMPORARY PROJECT SAFETY FENCING
1.8 PARTNERING
1.9 INSTALLATION REGULATIONS
1.10 TESTING LABORATORIES
1.10.1 Approved Testing Laboratories
1.10.2 Other Laboratory Services
1.11 ENVIRONMENTAL EVALUATION FOR SITE CONTAMINATION - CATEGORY I
1.11.1 Site Evaluation
1.11.2 Contractual Responsibilities of All Parties in the Event of Encounter with Contamination
1.12 CONSTRUCTION SCHEDULE RESTRAINTS
1.12.1 Occupancy
1.12.2 Protection
1.12.3 Phasing and Sequence
1.12.3.1 General
1.12.3.2 Special Work Restraints
1.12.4 Time of Performance
1.12.4.1 Access to Buildings
1.12.4.2 Work Requiring Outages
1.12.5 Outages

1.12.6 Rate to Charge Contractor
1.12.7 Disposition of Materials
1.12.8 Base Civil Engineering Work Clearance Request (AF Form 103)
1.12.9 Labeling of Storage Drums
1.12.10 Contractor Storage Trailer(s) and Buildings(s)
1.12.11 Continuity
1.13 COLOR BOARDS
1.14 REQUEST FOR INFORMATION (RFI) SYSTEM
1.15 PROGRESS PHOTOGRAPHS
1.16 CLEANUP
1.17 RESTORATION OF STORAGE AREA

PART 2 PRODUCTS (NOT APPLICABLE)

PART 3 EXECUTION (NOT APPLICABLE)

-- End of Section Table of Contents --

CEGS-01500/S (February 1997)

SECTION 01500

TEMPORARY CONSTRUCTION FACILITIES
02/97

PART 1 GENERAL

1.1 GENERAL REQUIREMENTS

1.1.1 Site Plan

The Contractor shall prepare a site plan indicating the proposed location and dimensions of any area to be fenced and used by the Contractor, the number of trailers to be used, avenues of ingress/egress to the fenced area and details of the fence installation. Any areas which may have to be graveled to prevent the tracking of mud shall also be identified. The Contractor shall also indicate if the use of a supplemental or other staging area is desired.

1.1.2 Identification of Employees

The Contractor shall be responsible for furnishing to each employee, and for requiring each employee engaged on the work to display, identification as approved and directed by the Contracting Officer. Prescribed identification shall immediately be delivered to the Contracting Officer for cancellation upon release of any employee. When required, the Contractor shall obtain and provide fingerprints of persons employed on the project. Contractor and subcontractor personnel shall wear identifying markings on hard hats clearly identifying the company for whom the employee works.

1.1.3 Employee Parking

Contractor employees shall park privately owned vehicles in an area designated by the Contracting Officer. This area will be within reasonable walking distance of the construction site. Contractor employee parking shall not interfere with existing and established parking requirements of the military installation.

1.2 AVAILABILITY AND USE OF UTILITY SERVICES

1.2.1 Payment for Utility Services

The Government will make all reasonably required utilities available to the Contractor from existing outlets and supplies, as specified in the contract. Unless otherwise provided in the contract, the amount of each utility service consumed shall be charged to or paid for by the Contractor at prevailing rates charged to the Government or, where the utility is produced by the Government, at reasonable rates determined by the Contracting Officer. The Contractor shall carefully conserve any utilities furnished without charge.

1.2.2 Meters and Temporary Connections

The Contractor, at its expense and in a manner satisfactory to the Contracting Officer, shall provide and maintain necessary temporary

connections, distribution lines, and meter bases (Government will provide meters) required to measure the amount of each utility used for the purpose of determining charges. The Contractor shall notify the Contracting Officer, in writing, 5 working days before final electrical connection is desired so that a utilities contract can be established. The Government will provide a meter and make the final hot connection after inspection and approval of the Contractor's temporary wiring installation. The Contractor shall not make the final electrical connection.

1.2.3 Advance Deposit

An advance deposit for utilities consisting of an estimated month's usage or a minimum of $50.00 will be required. The last monthly bills for the fiscal year will normally be offset by the deposit and adjustments will be billed or returned as appropriate. Services to be rendered for the next fiscal year, beginning 1 October, will require a new deposit. Notification of the due date for this deposit will be mailed to the Contractor prior to the end of the current fiscal year.

1.2.4 Final Meter Reading

Before completion of the work and final acceptance of the work by the Government, the Contractor shall notify the Contracting Officer, in writing, 5 working days before termination is desired. The Government will take a final meter reading, disconnect service, and remove the meters. The Contractor shall then remove all the temporary distribution lines, meter bases, and associated paraphernalia. The Contractor shall pay all outstanding utility bills before final acceptance of the work by the Government.

1.2.5 Sanitation

The Contractor shall provide and maintain within the construction area minimum field-type sanitary facilities approved by the Contracting Officer. Government toilet facilities will not be available to Contractor's personnel.

1.2.6 Telephone

The Contractor shall make arrangements and pay all costs for telephone facilities desired.

1.3 BULLETIN BOARD, PROJECT SIGN, AND PROJECT SAFETY SIGN

1.3.1 Bulletin Board

Immediately upon beginning of work, the Contractor shall provide a weatherproof glass-covered bulletin board not less than 36 by 48 inches in size for displaying the Equal Employment Opportunity poster, a copy of the wage decision contained in the contract, Wage Rate Information poster, and other information approved by the Contracting Officer. The bulletin board shall be located at the project site in a conspicuous place easily accessible to all employees, as approved by the Contracting Officer. Legible copies of the aforementioned data shall be displayed until work is completed. Upon completion of work the bulletin board shall be removed by and remain the property of the Contractor.

1.3.2 Project Signs

The Contractor shall furnish and erect a project sign in the location as selected by the Contracting Officer. Details of construction shall be as shown on sketches included in Attachment 1 to Section 00800. The sign shall be constructed of 1/2 inch thick (or metric equivalent), grade A-C, exterior type plywood. The sign shall receive one coat primer paint followed by two coats brown color paint in accordance with Fed. Std. 595a, Color No. 20100 semigloss exterior type enamel. Lettering must be white gloss exterior type enamel (Fed. Std. 595a, Color No. 37875). Windows and door of the Castle and logo background shall be painted white (Fed. Std. 595a, Color No. 37875). The Castle and inner border line shall be brown (Fed. Std. 595a, Color No. 20100). Upon completion of work under this contract, the project sign shall be removed from the job site and shall remain the property of the Contractor.

The Engineering and Services Directorate emblem (AFVA 85-3) may be acquired by sending a letter; a completed DD Form 1149, Requisition and Invoice/Shipping Document; or a DA Form 17, Requisition for Publications (Army customers) to:

The Air Force Publishing Distribution Center
2800 Eastern Boulevard
Baltimore, MD 21220-2898

1.4 PROTECTION AND MAINTENANCE OF TRAFFIC

During construction the Contractor shall provide access and temporary relocated roads as necessary to maintain traffic. The Contractor shall maintain and protect traffic on all affected roads during the construction period except as otherwise specifically directed by the Contracting Officer. Measures for the protection and diversion of traffic, including the provision of watchmen and flagmen, erection of barricades, placing of lights around and in front of equipment and the work, and the erection and maintenance of adequate warning, danger, and direction signs, shall be as required by the State and local authorities having jurisdiction. The traveling public shall be protected from damage to person and property. The Contractor's traffic on roads selected for hauling material to and from the site shall interfere as little as possible with public traffic. The Contractor shall investigate the adequacy of existing roads and the allowable load limit on these roads. The Contractor shall be responsible for the repair of any damage to roads caused by construction operations.

1.4.1 Haul Roads

The Contractor will be required to use the haul routes shown on the plans unless otherwise permitted in writing by the Contracting Officer. When haul routes are not designated on the plans, the Contractor must obtain approval of the Contracting Officer of haul routes he intends to use. The Contractor shall maintain the haul routes and shall keep the dust problem under control by wetting the surface as needed. Sweeping and cleaning of pavements will be done as necessary to remove spillage resulting from the hauling operations. After all hauling has been completed, the Contractor shall restore the earth areas used for the haul routes to original condition by final grading, shaping, compacting, and grassing, and shall clean and sweep all paved areas as required. Any pavement damaged as a result of hauling operations under this contract for both the earth and other materials shall be promptly repaired by the Contractor, as approved by the Contracting Officer. The cost of maintenance and repair of the haul routes, as mentioned above, shall be considered as a subsidiary obligation of the Contractor. The axle load of earth hauling equipment operating on

paved streets shall not exceed 18,000 pounds.

1.4.2 Barricades

The Contractor shall erect and maintain temporary barricades to limit public access to hazardous areas. Such barricades shall be required whenever safe public access to paved areas such as roads, parking areas or sidewalks is prevented by construction activities or as otherwise necessary to ensure the safety of both pedestrian and vehicular traffic. Barricades shall be securely placed, clearly visible with adequate illumination to provide sufficient visual warning of the hazard during both day and night.

1.5 CONTRACTOR'S TEMPORARY FACILITIES

1.5.1 Administrative Field Offices

The Contractor shall provide and maintain administrative field office facilities within the construction area at the designated site. Government office and warehouse facilities will not be available to the Contractor's personnel.

1.5.2 Storage Area

The Contractor shall construct a temporary 6 foot high chain link fence around trailers and materials. The fence shall include plastic strip inserts, colored brown, so that visibility through the fence is obstructed. Fence posts may be driven, in lieu of concrete bases, where soil conditions permit. Trailers, materials, or equipment shall not be placed or stored outside the fenced area unless such trailers, materials, or equipment are assigned a separate and distinct storage area by the Contracting Officer away from the vicinity of the construction site but within the military boundaries. Trailers, equipment, or materials shall not be open to public view with the exception of those items which are in support of ongoing work on any given day. Materials shall not be stockpiled outside the fence in preparation for the next day's work. Mobile equipment, such as tractors, wheeled lifting equipment, cranes, trucks, and like equipment, shall be parked within the fenced area at the end of each work day.

1.5.3 Supplemental Storage Area

Upon Contractor's request, the Contracting Officer will designate another or supplemental area for the Contractor's use and storage of trailers, equipment, and materials. This area may not be in close proximity of the construction site but shall be within the military boundaries. Fencing of materials or equipment will not be required at this site; however, the Contractor shall be responsible for cleanliness and orderliness of the area used and for the security of any material or equipment stored in this area. Utilities will not be provided to this area by the Government.

1.5.4 Appearance of Trailers

Trailers utilized by the Contractor for administrative or material storage purposes shall present a clean and neat exterior appearance and shall be in a state of good repair. Trailers which, in the opinion of the Contracting Officer, require exterior painting or maintenance will not be allowed on the military property.

1.5.5 Maintenance of Storage Area

Fencing shall be kept in a state of good repair and proper alignment. Should the Contractor elect to traverse, with construction equipment or other vehicles, grassed or unpaved areas which are not established roadways, such areas shall be covered with a layer of gravel as necessary to prevent rutting and the tracking of mud onto paved or established roadways; gravel gradation shall be at the Contractor's discretion. Grass located within the boundaries of the construction site shall be mowed for the duration of the project. Grass and vegetation along fences, buildings, under trailers, and in areas not accessible to mowers shall be edged or trimmed neatly.

1.5.6 New Building

In the event a new building is constructed for the temporary project field office, it shall be a minimum 12 feet in width, 16 feet in length and have a minimum of 7 feet headroom. It shall be equipped with approved electrical wiring, at least one double convenience outlet and the required switches and fuses to provide 110-120 volt power. It shall be provided with a work table with stool, desk with chair, two additional chairs, and one legal size file cabinet that can be locked. The building shall be waterproof, shall be supplied with heater, shall have a minimum of two doors, electric lights, a telephone, a battery operated smoke detector alarm, a sufficient number of adjustable windows for adequate light and ventilation, and a supply of approved drinking water. Approved sanitary facilities shall be furnished. The windows and doors shall be screened and the doors provided with dead bolt type locking devices or a padlock and heavy duty hasp bolted to the door. Door hinge pins shall be non-removable. The windows shall be arranged to open and to be securely fastened from the inside. Glass panels in windows shall be protected by bars or heavy mesh screens to prevent easy access to the building through these panels. In warm weather, air conditioning capable of maintaining the office at 50 percent relative humidity and a room temperature 20 degrees F below the outside temperature when the outside temperature is 95 degrees F, shall be furnished. Any new building erected for a temporary field office shall be maintained by the Contractor during the life of the contract and upon completion and acceptance of the work shall become the property of the Contractor and shall be removed from the site. All charges for telephone service for the temporary field office shall be borne by the Contractor, including long distance charges up to a maximum of $75.00 per month.

1.5.7 Security Provisions

Adequate outside security lighting shall be provided at the Contractor's temporary facilities. The Contractor shall be responsible for the security of its own equipment; in addition, the Contractor shall notify the appropriate law enforcement agency requesting periodic security checks of the temporary project field office.

1.6 PLANT COMMUNICATION

Whenever the Contractor has the individual elements of its plant so located that operation by normal voice between these elements is not satisfactory, the Contractor shall install a satisfactory means of communication, such as telephone or other suitable devices. The devices shall be made available for use by Government personnel.

1.7 TEMPORARY PROJECT SAFETY FENCING

As soon as practicable, but not later than 15 days after the date established for commencement of work, the Contractor shall furnish and erect temporary project safety fencing at the work site. The safety fencing shall be a high visibility orange colored, high density polyethylene grid or approved equal, a minimum of 42 inches high, supported and tightly secured to steel posts located on maximum 10 foot centers, constructed at the approved location. The safety fencing shall be maintained by the Contractor during the life of the contract and, upon completion and acceptance of the work, shall become the property of the Contractor and shall be removed from the work site. At the Munitions Storage Building the Contractor shall furnish and erect temporary construction fencing at the work site as noted on Plate C-4 and detailed on Plate C-6.

1.8 PARTNERING

Following contract award, the Government intends to propose a voluntary partnering relationship with the Contractor. This partnering relationship will attempt to draw on strengths of each organization to facilitate communications and minimize delays to achieve a quality product, within budget, and on schedule. Participation in such partnering activities may include attendance at coordination meetings and cooperation in other efforts to promote the partnering relationship. The Government and the Contractor will each bear their own costs for participation in the partnering relationship, with no change in the contract price. Participation will not result in any change in the terms or price of the contract.

1.9 INSTALLATION REGULATIONS

The employees of the Contractor will be required to abide by all installation regulations as published by the Commanding Officer. A copy of these regulations can be obtained from the Area/Resident Engineer at the installation. All costs in connection therewith shall be included in the contract price for the work. All costs in connection therewith shall be included in the contract price for the work.

1.10 TESTING LABORATORIES

Testing is required to be performed by the Contractor as part of his Quality Control Program to verify contract compliance. This Quality Control Testing is to be conducted by a project or commercial laboratory which has been found adequate and qualified by a Corps of Engineers Division Laboratory Inspection Team.

1.10.1 Approved Testing Laboratories

A composite listing of approved testing laboratories within the Savannah District is available upon request. The Contractor should engage the services of a laboratory contained in the composite list. Contractors may obtain the list by calling (678) 354-0310. Fax requests can be made to number (678) 354-0330.

1.10.2 Other Laboratory Services

The Contractor may engage the services of a laboratory other than those approved by Corps of Engineers District Laboratory Inspection Team if they comply with the following:

a. The Contractor identifies and proposes the unapproved laboratory a minimum of 90 days prior to the start of testing. This time is necessary to allow for scheduling an inspection by a Corps of Engineers District Laboratory team. The time for Government inspection will not be the basis for an increase in the contract performance period.

b. All costs of Government inspection shall be the responsibility of the Contractor.

c. The Contractor may request Government inspection and approval prior to award by forwarding a written request to:

US Army Engineer District, Savannah
Environmental and Materials Unit
200 North Cobb Parkway
Building 400, Suite 404
Marietta, GA 30062

1.11 ENVIRONMENTAL EVALUATION FOR SITE CONTAMINATION - CATEGORY I

1.11.1 Site Evaluation

The job site has been evaluated for potential site contamination. The site is located in a traditionally nonhazardous location. The installation has no reason to suspect contamination.

1.11.2 Contractual Responsibilities of All Parties in the Event of Encounter with Contamination

If the Contractor encounters materials or conditions which indicate that there may be contamination on the site, the Contractor shall stop all work on the job site and report the discovery of the contaminants to the Contracting Officer's Representative (COR). The COR, will issue a written order to the Contractor to resume work or to suspend, delay, or interrupt all or any part of the work of this contract for the period of time that the Contracting Officer determines appropriate for the convenience of the Government as provided in FAR 52.212-12 - SUSPENSION OF WORK. The Government will be responsible for making an assessment of the contaminated site if this course of action is determined to be appropriate. After the assessment has been completed, the Government reserves the right to the following courses of action:

a. Direct the Contractor to resume work.

b. Clean up the contaminated site prior to directing the Contractor to resume work. The COR will determine whether the cleanup is to be accomplished by others or the Contractor.

c. Relocate the project site.

d. Terminate the contract for the convenience of the Government as provided in FAR 52.249-1 - TERMINATION FOR CONVENIENCE OF THE GOVERNMENT (FIXED-PRICE) (SHORT FORM) or FAR 52.249-2 - TERMINATION FOR CONVENIENCE OF THE GOVERNMENT (FIXED-PRICE) - ALTERNATE I as applicable.

1.12 CONSTRUCTION SCHEDULE RESTRAINTS

1.12.1 Occupancy

The work to be performed is to be accomplished in facilities which will be occupied and in normal usage during the course of construction. Two weeks' notice is required to vacate buildings. It is the intent of these provisions to provide for maximum coordination between construction activities pursuant to this contract and concurrent ongoing routine activities of base personnel. Interference with and inconvenience to the occupants or routine of the facility shall be held to an absolute minimum.

1.12.2 Protection

Contractor is responsible to provide such covering, shields and barricades as are required to protect building occupants, equipment, stores, supplies, etc., from dust, debris, weather intrusion, water, moisture or other cause of damage resulting from construction.

1.12.3 Phasing and Sequence

1.12.3.1 General

In addition to the submittals required by clause SCHEDULES FOR CONSTRUCTION CONTRACTS (see SECTION 00700, FAR 52.236-15) the Contractor shall submit for approval a summary work schedule setting forth schedule dates for initiation and completion of construction in each work area. No work shall be performed prior to approval of this schedule and all work shall be performed in strict adherence thereto. If departures from this schedule appear to be required or desired, the Contracting Officer shall be promptly notified and his approval will be required prior to implementation of said departure(s).

1.12.3.2 Special Work Restraints

*1
See Plate A-1 for phasing requirements associated with Building 4421.

*1
Work associated with the Munitions Storage Building must be completed within 6 months from Notice to Proceed.

1.12.4 Time of Performance

1.12.4.1 Access to Buildings

All work requiring access to building interiors excluding attics, crawl spaces, etc., and all other work shall be performed between 7:30 a.m. and 4:30 p.m. (normal working hours for base where project is located) excluding official holidays, unless otherwise indicated or approved by the Contracting Officer. Requests to work during other than these normal hours shall be made in writing at least 48 hours in advance. For example, a request to work on a Saturday shall be submitted no later than Thursday at noon.

1.12.4.2 Work Requiring Outages

Work requiring outages of utilities or building systems will be accomplished after normal working hours and/or on weekends whenever possible in accordance with prior approved schedule(s).

1.12.5 Outages

Contractor's work requiring outages of utility systems or building systems

will require 2 weeks' advance notice and will be subject to the approval of the Contracting Officer. Notice shall include type of outage, date, and time outage will commence and estimated duration of outage. Duration of outage will be limited to 4 hours unless otherwise approved.

1.12.6 Rate to Charge Contractor

Water ---------- $0.82 per 1,000 gallons
Electricity ---------- $0.064 per KW hour
Sewer ---------- $0.93 per 1,000 gallons

NOTE: The Contractor will be responsible for all utility tie-ins, lines, meters, and disconnections for these utilities. These utilities are subject to the Contracting Officer's approval.

1.12.7 Disposition of Materials

All nonsalvable or unusable material shall be disposed of off base as directed by the Contracting Officer. All waste material generated by any work under this contract shall be handled, transported, stored, and disposed of off base by the Contractor in accordance with all applicable Federal, State, or local laws, ordinances, regulations, court orders, or other types of rules or rulings having the effect of law.

1.12.8 Base Civil Engineering Work Clearance Request (AF Form 103)

The Contractor shall obtain AF Form 103 prior to work commencement from the Contracting Officer. Upon receipt of an AF Form 103, the Contractor shall be responsible for locating and marking all base owned underground utilities, as well as coordinating local utility companies to stake out utilities if not owned by the base. Historical drawings, as-built drawings, and topographic drawings are available for review at the 4th Civil Engineer Squadron, Design element located in Building 3300. Base owned utilities include but are not limited to electric, water, sewer, steam, communication, telephone, fiber optic, cathodic protection, and fuel lines. Utilities not owned by the base include but are not limited to cable TV, Southern Bell Telephone, and natural gas. The Contractor shall contact ULOCO and the non-base utility companies for location services. In the event that the Contractor damages a utility which is commented in the plans, record drawings, or located by a utility locator, the Contractor shall repair/replace the utility at no additional cost to the Government. Utilities not documented, shown, or located by a locator shall be considered abandoned or unknown. Contractor damage to unknown or abandoned utilities shall be dealt with as a differing site condition.

1.12.9 Labeling of Storage Drums

All 55-gallon or larger drums brought on base for use under this contract and containing new material or used for storage of waste materials or hazardous waste must be labeled with a Department of Transportation (DOT) Proper Shipping Name, DOT Hazardous Identification Number, the Contractor's name, a Contractor representative, and the Contractor's telephone number. Label lettering should have a minimum height of 1/2 inch painted in white paint or other color that is in contract with the color of the drum. The label should be sufficiently durable to equal or exceed the life (including storage and disposal) of the drum.

1.12.10 Contractor Storage Trailer(s) and Buildings(s)

The Contractor shall place or paint a sign on all of his storage trailer(s) and building(s) used on this contract. At a minimum, the sign shall contain he name of the Contractor and a telephone number at which the Contractor can be reached. The trailer(s) and buildings(s) shall be complete with gates and/or doors which can be locked. Only material for this project shall be stored in the trailer(s) or building(s). The Contractor shall remove the storage trailer(s) or building(s) within 30 days after completion of the contract and prior to submitting his final invoice. The area around the storage trailer(s) and building(s) shall be kept clean. This includes the mowing of grass during the growing season. The lawn mower shall be supplied by the Contractor.

The Contractor will be given a lot in the Contractor Storage Area behind Building 2700 for the life of the contract. The Contractor's progress schedule shall include a line item (equal to 1%) for final cleanup of this storage lot. Final payment will not be made until this final cleanup is performed by the Contractor and accepted by Seymour Johnson AFB.

1.12.11 Continuity

All tools, labor and materials required to complete any item of work within a given work area or requiring an outage of any building utility or system shall be available at the site prior to commencement thereof. Once work has commenced on an item of work, said work shall be continuously and diligently performed to completion and acceptance. Breaks in work to be negotiated with the Contracting Officers Representative if other then Holidays.

1.13 COLOR BOARDS

Five sets of color boards shall be submitted, in addition to samples required elsewhere. Such submittals shall be made not later than 60 days prior to approval date required to achieve compliance with approved project schedule. Each set of boards shall include samples of colors and finishes of all exterior and interior building surfaces such as walls, toilet partitions, floors and ceilings. The samples will be presented on 8-inch by 10-1/2-inch boards (modules) with a maximum spread of 24 inches by 31-1/2 inches for foldouts. The modules shall be designed to fit in a standard looseleaf, three-ring binder. If more space is needed, more than one board per set may be submitted. The Contractor shall certify that he has reviewed the color samples in detail and that they are in strict accordance with the contract drawings and specifications, except as may be otherwise explicitly stated. If multiple material and finish (color) schemes are required, samples shall be identified by scheme and coordinated to room names and numbers shown on the architectural floor plans and room finish and color schedule. Submittal of the color boards shall not relieve the Contractor of the responsibility to submit the samples required by technical specifications.

1.14 REQUEST FOR INFORMATION (RFI) SYSTEM

The Government has developed an electronic database, the Request for Information (RFI) System, to track and answer Contractor questions and requests for information and clarification during construction. The use of the RFI System for all requests (the Contractor's as well as the subcontractors'/suppliers') is a contractual requirement for this project. The Contractor will enter the system over the Internet using any WEB browser and any Internet service provider. The Government will provide the Contractor a user identification and password for the system that will only

allow the Contractor to enter and view the requests for this project. The Contractor will provide the Government the E-mail address for the individual(s) inputting into the system in order that E-mail messages can be sent from the Government to the Contractor indicating a response to the request. The Government will provide training in the use of the software, which is a Lotus NOTES application. The Contractor will enter all requests indicating the question, recommended solution (if applicable), and needed response date. The Government will be notified through an E-mail message that the Contractor has entered a request into the system. When the Government has answered the request, an E-mail message will be sent to the Contractor, informing the Contractor that the answer to the request is in the system. The Contractor will enter the system to retrieve the answer using the same procedure to enter the question. The RFI System assigns a unique number to each request. The Contractor will not be reimbursed separately for the required use of this system. The Contractor shall include any costs associated with the use of this system into the appropriate bid item.

1.15 PROGRESS PHOTOGRAPHS

The Contractor shall, during the progress of the project, furnish the Contracting Officer progress photographs and color slides to depict progress of construction. The photographic work shall be performed by a qualified, established, commercial photographer. The photographs and slides shall be taken between the 1st and 5th day of each month and be delivered to the Contracting Officer not later than the 20th day of the same month taken. The photographs and slides shall be taken from not less than six positions for each month as selected by the Contracting Officer. They shall show, inasmuch as practicable, work accomplished during the previous month. The photographs shall be 8-inch by 10-inch color glossy prints and the slides 35 millimeter color slides. Each photograph shall be identified showing date made, contract title and number and a brief description of work depicted and shall be sequentially numbered. The identifying data shall be placed on the back of the prints. Slides shall have a number placed on the frame corresponding to the appropriate identified print, the name of the project, the date and a brief description of work depicted. No identifying data shall appear on the face of prints or in the viewing area of slides. One copy of each photograph and the corresponding negative and slide shall be furnished to the Contracting Officer by the time stipulated above. No separate payment will be made for these services and all costs in connection therewith shall be considered incidental to costs of the overall project.

1.16 CLEANUP

Construction debris, waste materials, packaging material and the like shall be removed from the work site daily. Any dirt or mud which is tracked onto paved or surfaced roadways shall be cleaned away. Materials resulting from demolition activities which are salvageable shall be stored within the fenced area described above or at the supplemental storage area. Stored material not in trailers, whether new or salvaged, shall be neatly stacked when stored.

1.17 RESTORATION OF STORAGE AREA

Upon completion of the project and after removal of trailers, materials, and equipment from within the fenced area, the fence shall be removed and will become the property of the Contractor. Areas used by the Contractor for the storage of equipment or material, or other use, shall be restored

to the original or better condition. Gravel used to traverse grassed areas shall be removed and the area restored to its original condition, including top soil and seeding as necessary.

PART 2 PRODUCTS (NOT APPLICABLE)
PART 3 EXECUTION (NOT APPLICABLE) -- End of Section --

SECTION TABLE OF CONTENTS

DIVISION 01 - GENERAL REQUIREMENTS

SECTION 01780

AS-BUILT DRAWINGS SUBMITTALS

01/99

PART 1 GENERAL

1.1 OMITTED
1.2 SUBMITTALS
1.3 PROJECT RECORD DOCUMENTS
1.3.1 As-Built Drawings
1.3.1.1 Government Furnished Materials
1.3.1.2 Working As-Built and Final As-Built Drawings
1.3.1.3 Drawing Preparation
1.3.1.4 Computer Aided Design and Drafting (CADD) Drawings
1.3.1.5 Omitted
1.3.1.6 Payment

PART 2 PRODUCTS (NOT USED)

PART 3 EXECUTION (NOT USED)

-- End of Section Table of Contents --

CEGS-01780 (January 1999)

SECTION 01780

AS-BUILT DRAWINGS SUBMITTALS
01/99

PART 1 GENERAL

1.1 OMITTED

1.2 SUBMITTALS

Government approval is required for submittals with a "G" designation; submittals not having a "G" designation are for information only. When used, a designation following the "G" designation identifies the office that will review the submittal for the Government. The following shall be submitted in accordance with Section 01330 SUBMITTAL PROCEDURES:

SD-02 Shop Drawings

As-Built Drawings; G

Drawings showing final as-built conditions of the project. The CADD drawings shall consist of two sets of completed final as-built drawings on separate media. One set of media shall be CADD drawing files. The other set of media shall consist of one set of mylars, two sets of blue line prints of the mylars, and the approved marked working as-built prints.

SD-03 Product Data

As-Built Record of Equipment and Materials; G

Two copies of the record listing the as-built materials and equipment incorporated into the construction of the project.

1.3 PROJECT RECORD DOCUMENTS

1.3.1 As-Built Drawings

This paragraph covers as-built drawings complete, as a requirement of the contract. The terms "drawings," "contract drawings," "drawing files," "working as-built drawings" and "final as-built drawings" refer to contract drawings which are revised to be used for final as-built drawings.

1.3.1.1 Government Furnished Materials

One set of electronic CADD files in the specified software and format revised to reflect all bid amendments will be provided by the Government at the preconstruction conference for projects requiring CADD file as-built drawings.

1.3.1.2 Working As-Built and Final As-Built Drawings

The Contractor shall revise two sets of paper drawings by red-line process to show the as-built conditions during the prosecution of the project. These working as-built marked drawings shall be kept current on a weekly basis and available on the job site at all times. Changes from the contract plans which are made in the work or additional information which might be uncovered in the course of construction shall be accurately and neatly recorded as they occur by means of details and notes. Final as-built drawings shall be prepared after the completion of specific phases of work (foundations, utilities, structural steel, etc., as appropriate for the project). The working as-built marked prints and final as-built drawings will be jointly reviewed for accuracy and completeness by the Contracting Officer and the Contractor prior to incremental submission of each monthly pay estimate. If the Contractor fails to maintain the working and finalas-built drawings as specified herein, the Contracting Officer will deduct from the monthly progress payment an amount representing the estimated cost of maintaining the as-built drawings. This monthly deduction will continue until an agreement can be reached between the Contracting Officer and the Contractor regarding the accuracy and completeness of updated drawings. Noncompliance with regard to maintaining as-built drawings will be consideration for an interim unsatisfactory Contractor performance evaluation. The working and final as-built drawings shall show the following information, but not be limited thereto:

a. The actual location, kinds and sizes of all sub-surface utility lines. In order that the location of these lines and appurtenances may be determined in the event the surface openings or indicators become covered over or obscured, the as-built drawings shall show, by offset dimensions to two permanently fixed surface features, the end of each run including each change in direction. Valves, splice boxes and similar appurtenances shall be located by dimensioning along the utility run from a reference point. The average depth below the surface of each run shall also be recorded.

b. The location and dimensions of any changes within the building structure.

c. Correct grade, elevations, cross section, or alignment of roads, earthwork, structures or utilities if any changes were made from contract plans.

d. Changes in details of design or additional information obtained from working drawings specified to be prepared and/or furnished by the Contractor; including but not limited to fabrication, erection, installation plans and placing details, pipe sizes, insulation material, dimensions of equipment foundations, etc.

e. The topography, invert elevations and grades of drainage installed or affected as part of the project construction.

f. Changes or modifications which result from the final inspection.

g. Where contract drawings or specifications present options, only the option selected for construction shall be shown on the final as-built

prints.

h. If borrow material for this project is from sources on Government property, or if Government property is used as a spoil area, the Contractor shall furnish a contour map of the final borrow pit/spoil area elevations.

i. Systems designed or enhanced by the Contractor, such as, HVAC controls, fire alarm, fire sprinkler, and irrigation systems.

j. Modifications (change order price shall include the Contractor's cost to change working and final as-built drawings to reflect modifications) and comply with the following procedures.

(1) Directions in the modification for posting descriptive changes shall be followed.

(2) A modification circle shall be placed at the location of each deletion.

(3) For all new details or sections which are added to a drawing, a modification circle shall be placed by the detail or section title.

(4) For minor changes, a modification circle shall be placed by the area changed on the drawing (each location).

(5) For major changes to a drawing, place a modification circle by the title of the affected plan, section, or detail at each location.

(6) For changes to schedules or drawings, a modification circle shall be placed either by the schedule heading or by the change in the schedule.

(7) The modification circle size shall be 1/2 inch diameter unless the area where the circle is to be placed is crowded. Smaller size circle shall be used for crowded areas.

1.3.1.3 Drawing Preparation

The as-built drawings shall be modified as may be necessary to correctly show the features of the project as it has been constructed by bringing the contract set into agreement with approved working as-built prints, adding such additional drawings as may be necessary. At the time of final inspection, 1 copy of the working as-built prints shall be delivered to the Contracting Officer for review and approval. These working as-built marked prints shall be neat, legible and accurate. These drawings are part of the permanent records of this project and shall be returned to the Contracting Officer. Any drawings damaged or lost by the Contractor shall be satisfactorily replaced by the Contractor at no expense to the Government.

1.3.1.4 Computer Aided Design and Drafting (CADD) Drawings

Only personnel proficient in the preparation of CADD drawings shall be employed to modify the contract drawings or prepare additional new drawings. Additions and corrections to the contract drawings shall be

equal in quality and detail to that of the originals. Line colors, line weights, lettering, layering conventions, and symbols shall be the same as the original line colors, line weights, lettering, layering conventions, and symbols. If additional drawings are required, they shall be prepared using the specified electronic file format applying the same guidance specified for original drawings. The title block and drawing border to be used for any new final as-built drawings shall be identical to that used on the contract drawings. Additions and corrections to the contract drawings shall be accomplished using CADD files . The Contractor will use the most current version of Microstation software using Windows NT operating system. The electronic files will be supplied on ISO 9660 Format compact dics, read-only memory (CD-ROM). The Contractor shall be responsible for providing all program files and hardware necessary to prepare final as-built drawings. The Contracting Officer will review final as-built drawings for accuracy and the Contractor shall make all required corrections, changes, additions, and deletions.

a. When final revisions have been completed, the cover sheet drawing shall show the wording "RECORD DRAWING AS-BUILT" followed by the name of the Contractor in letters at least 3/16 inch high. All other contract drawings shall be marked either "AS-Built" drawing denoting no revisions on the sheet or "Revised As-Built" denoting one or more revisions. Original contract drawings shall be dated in the revision block.

b. After receipt by the Contractor of the approved working as-built prints and approval of completed sections of final as-builts the Contractor shall, within 10 days for each specific phase of work for contracts less than $5 million, or 20 days for each specific phase of work for contracts $5 million and above, make the final as-built submittal. This submittal shall consist of one ISO 9660 compact disc, read-only memory (CD-ROM), one set of mylars, and two sets of prints of these drawings and the return of the approved marked working as-built prints. They shall be complete in all details and identical in form and function to the contract drawing files supplied by the Government. Any transactions or adjustments necessary to accomplish this are the responsibility of the Contractor. The Government reserves the right to reject any drawing files it deems incompatible with the customer's CADD system. All paper prints, drawing files and storage media submitted will become the property of the Government upon final approval. Failure to submit final as-built drawing files and marked prints as specified shall be cause for withholding any payment due the Contractor under this contract and shall be grounds for a final unsatisfactory Contractor performance evaluation. Approval and acceptance of final as-built drawings shall be accomplished before final payment is made to the Contractor.

1.3.1.5 Omitted

1.3.1.6 Payment

No separate payment will be made for as-built drawings required under this contract, and all costs in connection therewith shall be considered a subsidiary obligation of the Contractor.

PART 2 PRODUCTS (NOT USED)

PART 3 EXECUTION (NOT USED)

-- End of Section --

SECTION TABLE OF CONTENTS

DIVISION 02 - SITE WORK

SECTION 02091

PCB BALLASTS, TRANSFORMERS AND HAZARDOUS WASTE LAMP REMOVAL AND RECYLING

PART 1 GENERAL

1.1 WORK REQUIREMENTS
1.2 DEFINITIONS
1.2.1 Certified Recycling Facility (CRF)
1.2.2 North Carolina EPD
1.2.3 Hazardous Materials Transporter
1.2.4 PCB Ballasts
1.2.5 Hazardous Waste Lamps (HWL)
1.2.6 Waste Mercury-Containing Lamp Transfer Facility
1.3 REFERENCES, PUBLICATIONS AND FORMS
1.4 SUBMITTALS

PART 2 PRODUCTS

2.1 GOVERNMENT-FURNISHED ITEMS AND SERVICES
2.2 CONTRACTOR-FURNISHED ITEMS AND SERVICES
2.2.1 Equipment, Materials and Tools
2.2.2 Equipment
2.2.3 Materials
2.2.4 Labeling Collection Containers
2.2.5 Transportation
2.2.6 Forms and Notifications

PART 3 EXECUTION

3.1 SPECIFIC TASKS

-- End of Section Table of Contents --

SECTION 02091

PCB BALLASTS, TRANSFORMERS AND HAZARDOUS WASTE LAMP REMOVAL AND RECYLING

PART 1 GENERAL

Building 4421, Squadrons Operations at Seymour Johnson AFB, NC, scheduled for selective demolition for remodeling and addition. Electrical fixtures, classed as 'Hazardous Waste Lamps' (HWL) found in this building include (but may not be limited to) fluorescent downlight with compact fluorescence, troffers with 2 and 4 lamp fluorescents ranging in length from 20 inches to 8 feet, and interior high intensity direct (HID) fixtures. These fixtures are to be removed prior to demolition. Fixtures are regulated based upon the presence of PCB containing electrical equipment. HWLs are regulated due to the mercury contained in the lamps. Quantities are based upon review of as-built drawings rather than direct inspection. All ballasts were assumed PCB ballast without inspection. Lighted exit signs, when found, were assumed to be fluorescent replacements, although some may be incandescent. Utility (streetlight) metal halide lamps are not included in this estimate. The Contractor shall verify number and type of HWLs and ballasts to be removed and recycled. Estimated quantities are as follows:

To Be Removed: 3 to 4-ft Fluorescent tubes, 460 (444 to be reused)
Ballasts (assumed PCB containing) 230

The State of North Carolina and the Federal EPA considers unbroken mercury containing lamps as universal waste. Unbroken lamps shall be packed and shipped with applicable Department of Transportation Labeling. They do not need full hazardous materials manifesting. They do require a Universal Waste "Bill of Lading" and a state of North Carolina "Universal Waste" number. Broken HWL are considered "Hazardous Waste" and RCRA and DOT requirements apply.

Transformers, capacitors, electrical light ballasts, electromagnets, switches, and voltage regulators are considered PCB Articles, subclassed as PCB Equipment. They shall also be removed and recycled or disposed of as required by local, state and federal regulations. All capacitors are assumed to contain PCBs unless a label or chemical analysis states that they do not. PCB ballasts must be disposed of as hazardous wastes and may not be re-sold to subsequent users.

1.1 WORK REQUIREMENTS

The Contractor shall provide all personnel, transportation, services, materials, equipment, technical and management support required to perform the requirements as defined in this specification. The Contractor shall document the results of all recycling efforts.

1.2 DEFINITIONS

1.2.1 Certified Recycling Facility (CRF)

A facility that can validate that recyclable materials received are manufactured into new materials for commercial sale or are reused onsite by the facility.

1.2.2 North Carolina EPD

North Carolina Environmental Protection Division of the Department of Natural Resources.

1.2.3 Hazardous Materials Transporter

A person engaged in the off-site transportation of waste mercury-containing lamps, or PCB ballasts and transformers by air, rail, highway or water.

1.2.4 PCB Ballasts

Light ballasts weighing less than 50 pounds not labeled "No PCB" and that therefore may contain polychlorinated biphenyls (PCBs).

1.2.5 Hazardous Waste Lamps (HWL)

Any type of high or low pressure lighting device that is unprocessed, contains mercury and generated light through the discharge of electricity either directly or indirectly through a fluorescing coating. Includes fluorescent lamps, mercury lamps, metal halide lamps and high-pressure sodium lamps.

1.2.6 Waste Mercury-Containing Lamp Transfer Facility

Any transportation-related facility including loading docks, parking areas, storage areas and other similar areas where shipments of waste mercury-containing lamps are held during the normal course of transportation for 10 days or less.

1.3 REFERENCES, PUBLICATIONS AND FORMS

The Contractor shall comply with the issue or version (including all changes and amendments) of Federal, State and local environmental statutes and regulations in effect on the day of issuance of this contract, including the applicable portions of the documents cited in the basic contract. References include but are not limited to the following.

Environmental Protection Agency 40 CFR Parts 260, 261, 264, 265, 268, 270 and 273

Environmental Protection Agency, Resource Conservation and Recovery Act (RCRA) (40 CFR 266).

Environmental Protection Agency, Disposal of Polychlorinated Biphenyls (PCBs) Federal Register vol. 63 29 June 1998, p. 25283 together with 40 CFR 761.

Hazardous Waste Management System: Modification of the Hazardous Waste Program; Hazardous Waste Lamps, Final Rule Federal Register Vol. 64 No. 128, July 6 1999 Rules and Regulations

Hazardous Waste and Emergency Responder 29 CFR 1926.65

1.4 SUBMITTALS

Government approval is required for submittals with a "G" designation; submittals not having a "G" designation are for information only. When used, a designation following the "G" designation identifies the office that will review the submittal for the Government. The following shall be submitted in accordance with Section 01330 SUBMITTAL PROCEDURES:

SD-01 Preconstruction Submittals

Spill Prevention and Response Plan; G,RE

Three separately bound copies including the names of workers responsible for handling of PCB articles and HWLs. Submittal shall include the requirements of 29 CFR 1926.65 Emergency Responders and all applicable training and certifications.

SD-07 Certificates

Certification of Approved Recycling or Transfer Facility; G,RE

To be submitted 30 days prior to the removal of recyclable from the site (reference paragraph 3.1.e. 3.1.f) and any time the Contractor changes facilities.

SD-11 Closeout Submittals

PCB Articles and Hazardous Waste Lamps Disposition Report

Three separately bound copies of all logs, invoices, forms, notices, manifests, bills of lading or other shipping documents shall be submitted at the completion of the removal operations specified in this section.

Receipt of Materials at Transfer or Recycling Facility or TSDF

To be submitted no later than 30 days from the date of shipment (reference paragraph 3.1.e. 3.1.f)..

PART 2 PRODUCTS

2.1 GOVERNMENT-FURNISHED ITEMS AND SERVICES

The Government shall not provide any materials or services under this specification.

2.2 CONTRACTOR-FURNISHED ITEMS AND SERVICES

The Contractor shall furnish everything required to meet the conditions of

this specification.

2.2.1 Equipment, Materials and Tools

The Contractor shall furnish all labor, equipment, materials, supplies, containers, labels, tools, vehicles and supervision necessary to perform the work defined in this specification.

2.2.2 Equipment

All equipment which is used by the Contractor to collect, transfer, transport, containerize and otherwise handle waste mercury-containing lamps, PCB ballasts and transformers shall meet all applicable federal and state requirements. Appropriate and permitted vehicles must be used to collect and transport the recyclable hazardous materials to the appropriate transfer and recycling/reclaim facilities.

2.2.3 Materials

The Contractor shall provide appropriate collection containers for the safe collection and shipment of waste mercury-containing lamps that will accommodate 4 foot and 8 foot tube lengths as well as other sized and shaped lamps, and for the collection and shipment of small PCB ballasts and transformers. Containers provided by the Contractor shall meet the requirements of the receiving certified recycling facility and the Department of Transportation (DOT). The Contractor shall also provide appropriate shipping labels for these containers.

2.2.4 Labeling Collection Containers

Logo decals and descriptive labels (i.e. "Used Mercury-Containing lamps" or "PCB Ballasts") shall initially be placed by the Contractor on all containers used to collect these materials respectively. Used Mercury-containing lamps shall not be considered hazardous waste while intact.

2.2.5 Transportation

The Contractor shall provide permitted transportation for the collection, transfer, removal and transport of waste mercury-containing lamps, PCB ballasts and transformers from Fort Benning to appropriate recycling and reclamation facilities.

2.2.6 Forms and Notifications

It is the responsibility of the Contractor to determine which forms must be completed for compliance with State, Federal, and local requirements complete and submit these forms. Copies of all notification forms shall be included in the PCB ARTICLES AND HAZARDOUS WASTE LAMPS DISPOSITION REPORT.

PART 3 EXECUTION

3.1 SPECIFIC TASKS

a. The Contractor shall perform mercury-containing fluorescent light, HID light and PCB ballast/transformer recycling/disposal. These materials are to be recycled within the United States.

b. The Contractor, along with the Contracting Officer or his designated representative, shall determine a fixed quantity of said materials to be removed from the buildings prior to commencement of work. Broken HWL shall be noted at this time. Estimates provided here are to be verified by the Contractor prior to bid submittal.

c All waste mercury-containing lamps shall be delivered to a certified recycling facility (CRF), which has been approved prior to use by the Contracting Officer or his representative, where they shall be disassembled, reclaimed and prepared for marketing as a raw material in a manner that constitutes recycling as defined in the Resource Conservation and Recovery Act (RCRA) (40 CFR 266).

d. PCB ballasts and transformers shall be delivered to a certified recycling facility (CRF) which has been approved prior to use by the Contracting Officer, where they shall be disassembled. PCB-contaminated liquids shall be incinerated in accordance with 40 CFR 720. All other parts of the ballast shall be reclaimed, reused or prepared for marketing as a raw material in a manner that constitutes recycling as defined in RCRA (40 CFR 266).

e. The Contractor must submit copies of manifests, bills of lading and other receipts for every shipment transported off-site from Fort Benning, to a transfer facility or recycling facility. All copies must show name, address and phone number of receiving facility, as well as weight in pounds of materials being received. Receipts must be only for materials removed at Fort Benning under this contract. The Contractor, in accordance with RCRA regulations and the newly adopted State and Federal standards for mercury-containing lamps, must fulfill all applicable transportation and record keeping requirements.

f. The Contractor shall ensure that all mercury-containing lamps, PCB ballasts, and transformers are transported by a permitted hazardous materials transporter directly to a permitted transfer facility or permitted recycling facility, completing proper DOT shipping documentation and obtaining signature of transfer on shipping documentation from the Contracting Officer prior to leaving the site.

g. The Contractor shall take all precautions against breakage of mercury-containing lamps. If any mercury-containing lamps are broken during handling by the Contractor, they are considered to be hazardous waste and handled in accordance RCRA regulation. The Contractor shall be responsible for all costs associated with the cleanup and disposal of hazardous waste generated by the Contractor's employees if intact lamps are broken while being collected and transported.

h. It is the Contractor's responsibility to clean up any pre-existing broken HWL. This material is to be treated, shipped and disposed of as hazardous waste and shall meet all of the requirements (personal protective equipment, hazard posting, site control, emergency responder training,

medical clearance to wear a respirator, etc., as stated in OSHA's Hazardous Waste Site and Emergency Responder, 29 CFR 1926.65). Prior to removal activities, the Contractor shall walk the buildings scheduled for demolition with the Contracting Officer to determine the number of broken HWLs. The Contractor shall submit an estimate for the clean-up and disposal costs of broken HWL and will be reimbursed by the Government. All other breakage caused by the removal and handling of the HWLs shall be the Contractor's responsibility and will not be reimbursable, as the Government will not have generated it.

-- End of Section --

SECTION TABLE OF CONTENTS

DIVISION 02 - SITE WORK

SECTION 02220

DEMOLITION

12/97

PART 1 GENERAL

1.1 REFERENCES
1.2 GENERAL REQUIREMENTS
1.3 SUBMITTALS
1.4 DUST CONTROL
1.5 PROTECTION
1.5.1 Protection of Personnel
1.5.2 Protection of Structures
1.5.3 Protection of Existing Property
1.5.4 Protection From the Weather
1.5.5 Protection of Trees
1.5.6 Environmental Protection
1.6 BURNING
1.7 USE OF EXPLOSIVES

PART 2 PRODUCTS (Not Applicable)

PART 3 EXECUTION

3.1 EXISTING STRUCTURES
3.2 UTILITIES
3.3 FILLING
3.4 DISPOSITION OF MATERIAL
3.4.1 Salvageable Items and Material
3.4.1.1 Material Salvaged for the Contractor
3.4.1.2 Items Salvaged for the Government
3.4.1.3 Omitted
3.4.1.4 Historical Items
3.4.2 Unsalvageable Material
3.5 CLEAN UP
3.6 PAVEMENTS

-- End of Section Table of Contents --

CEGS-02220 (December 1997)

SECTION 02220

DEMOLITION
12/97

PART 1 GENERAL

1.1 REFERENCES

The publications listed below form a part of this specification to the extent referenced. The publications are referred to in the text by basic designation only.

ENGINEERING MANUALS (EM)

EM 385-1-1	(1996) U.S. Army Corps of Engineers Safety and Health Requirements Manual

1.2 GENERAL REQUIREMENTS

The work includes demolition, salvage of identified items and materials, and removal of resulting rubbish and debris. Rubbish and debris shall be removed from Government property daily, unless otherwise directed, to avoid accumulation at the demolition site. Materials that cannot be removed daily shall be stored in areas specified by the Contracting Officer. In the interest of occupational safety and health, the work shall be performed in accordance with EM 385-1-1, Section 23, Demolition, and other applicable Sections. In the interest of conservation, salvage shall be pursued to the maximum extent possible; salvaged items and materials shall be disposed of as specified.

1.3 SUBMITTALS

Government approval is required for submittals with a "G" designation; submittals not having a "G" designation are for information only. When used, a designation following the "G" designation identifies the office that will review the submittal for the Government. The following shall be submitted in accordance with Section 01330 SUBMITTAL PROCEDURES:

SD-03 Product Data

Work Plan

The procedures proposed for the accomplishment of the work. The procedures shall provide for safe conduct of the work, including procedures and methods to provide necessary supports, lateral bracing and shoring when required, careful removal and disposition of materials specified to be salvaged, protection of property which is to remain undisturbed, coordination with other work in

progress, and timely disconnection of utility services. The procedures shall include a detailed description of the methods and equipment to be used for each operation, and the sequence of operations in accordance with EM 385-1-1.

1.4 DUST CONTROL

The amount of dust resulting from demolition shall be controlled to prevent the spread of dust to occupied portions of the construction site and to avoid creation of a nuisance in the surrounding area. Use of water will not be permitted when it will result in, or create, hazardous or objectionable conditions such as ice, flooding and pollution.

1.5 PROTECTION

1.5.1 Protection of Personnel

During the demolition work the Contractor shall continuously evaluate the condition of the structure being demolished and take immediate action to protect all personnel working in and around the demolition site. No area, section, or component of floors, roofs, walls, columns, pilasters, or other structural element will be allowed to be left standing without sufficient bracing, shoring, or lateral support to prevent collapse or failure while workmen remove debris or perform other work in the immediate area.

1.5.2 Protection of Structures

Floors, roofs, walls, columns, pilasters, and other structural components that are designed and constructed to stand without lateral support or shoring, and are determined to be in stable condition, shall remain standing without additional bracing, shoring, of lateral support until demolished, unless directed otherwise by the Contracting Officer. The Contractor shall ensure that no elements determined to be unstable are left unsupported and shall be responsible for placing and securing bracing, shoring, or lateral supports as may be required as a result of any cutting, removal, or demolition work performed under this contract.

1.5.3 Protection of Existing Property

Before beginning any demolition work, the Contractor shall survey the site and examine the drawings and specifications to determine the extent of the work. The Contractor shall take necessary precautions to avoid damage to existing items to remain in place, to be reused, or to remain the property of the Government; any damaged items shall be repaired or replaced as approved by the Contracting Officer. The Contractor shall coordinate the work of this section with all other work and shall construct and maintain shoring, bracing, and supports as required. The Contractor shall ensure that structural elements are not overloaded and shall be responsible for increasing structural supports or adding new supports as may be required as a result of any cutting, removal, or demolition work performed under this contract.

1.5.4 Protection From the Weather

The interior of buildings to remain; salvageable materials and equipment shall be protected from the weather at all times.

1.5.5 Protection of Trees

Trees within the project site which might be damaged during demolition, and which are indicated to be left in place, shall be protected by a 6 foot high fence. The fence shall be securely erected a minimum of 5 feet from the trunk of individual trees or follow the outer perimeter of branches or clumps of trees. Any tree designated to remain that is damaged during the work under this contract shall be replaced in kind or as approved by the Contracting Officer.

1.5.6 Environmental Protection

The work shall comply with the requirements of Section 01355 ENVIRONMENT PROTECTION.

1.6 BURNING

The use of burning at the project site for the disposal of refuse and debris will not be permitted.

1.7 USE OF EXPLOSIVES

Use of explosives will not be permitted.

PART 2 PRODUCTS (Not Applicable)

PART 3 EXECUTION

3.1 EXISTING STRUCTURES

Existing structures indicated shall be removed as indicated. Interior walls, other than retaining walls and partitions, shall be removed to 3 feet below grade or to top of concrete slab on ground. Basement slabs shall be broken up to permit drainage. Sidewalks, curbs, gutters and street light bases shall be removed as indicated.

3.2 UTILITIES

Existing utilities shall be removed as indicated. When utility lines are encountered that are not indicated on the drawings, the Contracting Officer shall be notified prior to further work in that area.

3.3 FILLING

Holes, open basements and other hazardous openings shall be filled in accordance with Section 02315, "Excavation, Filling and Backfilling for Buildings."

3.4 DISPOSITION OF MATERIAL

Title to material and equipment to be demolished, except Government salvage

and historical items, is vested in the Contractor upon receipt of notice to proceed. The Government will not be responsible for the condition, loss or damage to such property after notice to proceed.

3.4.1 Salvageable Items and Material

Contractor shall salvage items and material to the maximum extent possible.

3.4.1.1 Material Salvaged for the Contractor

Material salvaged for the Contractor shall be stored as approved by the Contracting Officer and shall be removed from Government property before completion of the contract. Material salvaged for the Contractor shall not be sold on the site.

3.4.1.2 Items Salvaged for the Government

Salvaged items to remain the property of the Government shall be removed in a manner to prevent damage, and packed or crated to protect the items from damage while in storage or during shipment. Items damaged during removal or storage shall be repaired or replaced to match existing items. Containers shall be properly identified as to contents.

3.4.1.3 Omitted

3.4.1.4 Historical Items

Historical items shall be removed in a manner to prevent damage. The following historical items shall be delivered to the Government for disposition: Corner stones, contents of corner stones, and document boxes wherever located on the site.

3.4.2 Unsalvageable Material

Concrete, masonry, and other noncombustible material, shall be disposed of off site. Combustible material shall be disposed of off the site.

3.5 CLEAN UP

Debris and rubbish shall be removed from basement and similar excavations. Debris shall be removed and transported in a manner that prevents spillage on streets or adjacent areas. Local regulations regarding hauling and disposal shall apply.

3.6 PAVEMENTS

Existing pavements designated for removal shall be saw cut and removed in accordance with the details shown on the drawings and to the limits and depths indicated on the drawings.

-- End of Section --

SECTION TABLE OF CONTENTS

DIVISION 02 - SITE WORK

SECTION 02300

EARTHWORK

12/97

PART 1 GENERAL

1.1 REFERENCES
1.2 OMITTED
1.3 OMITTED
1.4 DEFINITIONS
1.4.1 Satisfactory Materials
1.4.2 Unsatisfactory Materials
1.4.3 Cohesionless and Cohesive Materials
1.4.4 Degree of Compaction
1.4.5 Omitted
1.4.6 Topsoil
1.5 SUBMITTALS
1.6 SUBSURFACE DATA
1.7 CLASSIFICATION OF EXCAVATION
1.8 BLASTING
1.9 UTILIZATION OF EXCAVATED MATERIALS

PART 2 PRODUCTS (Not Applicable)

PART 3 EXECUTION

3.1 STRIPPING OF TOPSOIL
3.2 GENERAL EXCAVATION
3.2.1 Ditches, Gutters, and Channel Changes
3.2.2 Drainage Structures
3.3 SELECTION OF BORROW MATERIAL
3.4 OPENING AND DRAINAGE OF EXCAVATION AND BORROW PITS
3.5 GRADING AREAS
3.6 BACKFILL
3.7 PREPARATION OF GROUND SURFACE FOR EMBANKMENTS
3.7.1 General Requirements
3.7.2 Frozen Material
3.8 EMBANKMENTS
3.8.1 Earth Embankments
3.8.2 Moisture Content
3.9 SUBGRADE PREPARATION
3.9.1 Construction
3.9.2 Moisture Content
3.9.3 Compaction
3.9.3.1 Omitted
3.9.3.2 Subgrade for Pavements
3.9.3.3 Subgrade for Shoulders
3.10 SHOULDER CONSTRUCTION
3.11 FINISHING
3.12 PLACING TOPSOIL
3.13 TESTING

3.13.1 Fill and Backfill Material Gradation, Classification, and Moisture Content
3.13.2 In-Place Densities
3.13.3 Moisture Content
3.13.4 Optimum Moisture and Laboratory Maximum Density
3.13.5 Compaction Control
3.13.6 Tolerance Tests for Subgrades
3.14 SUBGRADE AND EMBANKMENT PROTECTION

-- End of Section Table of Contents --

CEGS-02300 (December 1997)

SECTION 02300

EARTHWORK
12/97

PART 1 GENERAL

1.1 REFERENCES

The publications listed below form a part of this specification to the extent referenced. The publications are referred to in the text by basic designation only.

AMERICAN SOCIETY FOR TESTING AND MATERIALS (ASTM)

ASTM C 136	(1996) Sieve Analysis of Fine and Coarse Aggregates
ASTM D 422	(1963; R 1990) Particle-Size Analysis of Soils
ASTM D 1140	(1992) Amount of Material in Soils Finer than the No. 200 (75-micrometer) Sieve
ASTM D 1556	(1990; R 1996) Density and Unit Weight of Soil in Place by the Sand-Cone Method
ASTM D 1557	(1991) Laboratory Compaction Characteristics of Soil Using Modified Effort (56,000 ft-lbf/cu. ft. (2,700 kN-m/cu. m.))
ASTM D 2216	(1992) Laboratory Determination of Water (Moisture) Content of Soil, and Rock
ASTM D 2487	(1993) Classification of Soils for Engineering Purposes (Unified Soil Classification System)
ASTM D 4318	(1995a) Liquid Limit, Plastic Limit, and Plasticity Index of Soils

1.2 OMITTED
1.3 OMITTED

1.4 DEFINITIONS

1.4.1 Satisfactory Materials

Satisfactory materials shall comprise any materials classified by ASTM D 2487 as GW, GP, GM, GP-GM, GW-GM, GC, GP-GC, GM-GC, SW, SP, SM, SW-SM, SC, SW-SC, SP-SM, SP-SC, CL, ML, and CL-ML. Satisfactory materials for grading shall be free from roots and other organic matter, trash, debris, frozen material, and stones larger than 3 inches in any dimension.

1.4.2 Unsatisfactory Materials

Materials which do not comply with the requirements for satisfactory materials are unsatisfactory. Unsatisfactory materials also include man-made fills; trash; refuse; backfills from previous construction; demolition debris; and material classified as satisfactory which contains root and other organic matter or frozen material. The Contracting Officer shall be notified of any contaminated materials.

1.4.3 Cohesionless and Cohesive Materials

Cohesionless materials include materials classified in ASTM D 2487 as GW, GP, SW, and SP. Cohesive materials include materials classified as GC, GP-GC, GM-GC, SC, SW-SC, SP-SC, ML, CL, CL-ML, MH, and CH and the unsatisfactory organic materials Pt, OL, and OH. Materials classified as GM, GP-GM, GW-GM, SM, SW-SM, and SP-SM will be identified as cohesionless only when the fines are nonplastic. Testing required for classifying materials shall be in accordance with ASTM D 4318, ASTM C 136, ASTM D 422, and ASTM D 1140.

1.4.4 Degree of Compaction

Degree of compaction required is expressed as a percentage of the maximum density obtained by the test procedure presented in ASTM D 1557 abbreviated as a percent of laboratory maximum density.

1.4.5 Omitted

1.4.6 Topsoil

Material suitable for topsoil shall be obtained from required stripping of the project site and/or areas off the installation. Material obtained from off-installation areas suitable for topsoil shall meet the requirements specified for topsoil in Section 02921 SEEDING.

1.5 SUBMITTALS

Government approval is required for submittals with a "G" designation; submittals not having a "G" designation are for information only. When used, a designation following the "G" designation identifies the office that will review the submittal for the Government. The following shall be submitted in accordance with Section 01330 SUBMITTAL PROCEDURES:

SD-03 Product Data

Earthwork; G|RE

Procedure and location for disposal of unused satisfactory material. Blasting plan when blasting is permitted. Proposed source of borrow material.

SD-05 Design Data

Earthwork

Notification of encountering rock in the project. Advance notice on the opening of excavation or borrow areas. Advance notice on shoulder construction for rigid pavements.

SD-06 Test Reports

Testing

Within 24 hours of conclusion of physical tests, three copies of test results.

SD-07 Certificates

Testing; G|RE

Qualifications of the commercial testing laboratory.

1.6 SUBSURFACE DATA

Logs of soil test borings and soil test data are shown on the drawings. These data represent the best subsurface information available; however, variations may exist in the subsurface between boring locations. The water level data indicate only the conditions at the particular time or times the information was obtained and may not indicate variations such as those caused by periods of drought or increased rainfall, seasonal fluctuations in rainfall, changes in the surface drainage pattern, or application of irrigation water.

1.7 CLASSIFICATION OF EXCAVATION

No consideration will be given to the nature of the materials, and all excavation will be designated as unclassified excavation.

1.8 BLASTING

Blasting will not be permitted.

1.9 UTILIZATION OF EXCAVATED MATERIALS

Unsatisfactory materials removed from excavations shall be disposed of off the installation. Satisfactory material removed from excavations shall be used, insofar as practicable, in the construction of fills, embankments, subgrades, shoulders, bedding (as backfill), and for similar purposes. No satisfactory excavated material shall be wasted without specific written authorization. Satisfactory material authorized to be wasted shall be disposed of off the installation. No excavated material shall be disposed of to obstruct the flow of any stream, endanger a partly finished structure, impair the efficiency or appearance of any structure, or be detrimental to the completed work in any way.

PART 2 PRODUCTS (Not Applicable)

PART 3 EXECUTION

3.1 STRIPPING OF TOPSOIL

Within areas to be excavated or to receive fill, topsoil shall be stripped to full depth. Topsoil shall be spread on areas already graded and prepared for topsoil, or transported and deposited in stockpiles convenient to areas that are to receive application of the topsoil later, or at locations indicated or specified. Topsoil shall be kept separate from other excavated materials, brush, litter, objectionable weeds, roots,

stones larger than 2 inches in maximum dimension, and other materials that would interfere with planting and maintenance operations. Any surplus of topsoil from excavations and grading shall be removed from the site and disposed of off the installation.

3.2 GENERAL EXCAVATION

The Contractor shall perform excavation of every type of material encountered within the limits of the project to the lines, grades, and elevations indicated and as specified. Grading shall be in conformity with the typical sections shown and the tolerances specified in paragraph FINISHING. Satisfactory excavated materials shall be transported to and placed in fill or embankment within the limits of the work. Unsatisfactory materials encountered within the limits of the work shall be excavated below grade and replaced with satisfactory materials as directed. Such excavated material and the satisfactory material ordered as replacement shall be included in excavation. Surplus satisfactory excavated material not required for fill or embankment shall be disposed of off the installation. Unsatisfactory excavated material shall be disposed of off the installation. During construction, excavation and fill placement shall be performed in a manner and sequence that will provide proper drainage at all times. Material required for fill or embankment in excess of that produced by excavation within the grading limits shall be excavated from the borrow areas indicated or from approved areas off the installation selected by the Contractor.

3.2.1 Ditches, Gutters, and Channel Changes

Excavation of ditches, gutters, and channel changes shall be accomplished by cutting accurately to the cross sections, grades, and elevations shown. Ditches and gutters shall not be excavated below grades shown. Excessive open ditch or gutter excavation shall be backfilled with satisfactory, thoroughly compacted, material to grades shown. Material excavated shall be disposed of as shown or as directed, except that in no case shall material be deposited less than 4 feet from the edge of a ditch. The Contractor shall maintain excavations free from detrimental quantities of leaves, brush, sticks, trash, and other debris until final acceptance of the work.

3.2.2 Drainage Structures

Excavations shall be made to the lines, grades, and elevations shown, or as directed. Trenches and foundation pits shall be of sufficient size to permit the placement and removal of forms for the full length and width of structure footings and foundations as shown. Rock or other hard foundation material shall be cleaned of loose debris and cut to a firm, level, stepped, or serrated surface. Loose disintegrated rock and thin strata shall be removed. When concrete or masonry is to be placed in an excavated area, the bottom of the excavation shall not be disturbed. Excavation to the final grade level shall not be made until just before the concrete or masonry is to be placed.

3.3 SELECTION OF BORROW MATERIAL

Borrow material shall be selected to meet the requirements and conditions of the particular fill or embankment for which it is to be used. Borrow material shall be obtained from the borrow areas shown or from approved private sources, selected by the Contractor. Unless otherwise provided in the contract, the Contractor shall obtain from the owners the right to

procure material, pay royalties and other charges involved, and bear the expense of developing the sources, including rights-of-way for hauling. Borrow material from approved sources on Government-controlled land may be obtained without payment of royalties. Unless specifically provided, no borrow shall be obtained within the limits of the project site without prior written approval. Necessary clearing, grubbing, and satisfactory drainage of borrow pits and the disposal of debris thereon shall be considered related operations to the borrow excavation.

3.4 OPENING AND DRAINAGE OF EXCAVATION AND BORROW PITS

Except as otherwise permitted, borrow pits and other excavation areas shall be excavated providing adequate drainage. Overburden and other spoil material shall be transported off the installation. Borrow pits shall be neatly trimmed and drained after the excavation is completed. The Contractor shall ensure that excavation of any area, operation of borrow pits, or dumping of spoil material results in minimum detrimental effects on natural environmental conditions.

3.5 GRADING AREAS

Where indicated, work will be divided into grading areas within which satisfactory excavated material shall be placed in embankments, fills, and required backfills. The Contractor shall not haul satisfactory material excavated in one grading area to another grading area except when so directed in writing.

3.6 BACKFILL

Backfill adjacent to any and all types of structures shall be placed and compacted to at least 90 percent laboratory maximum density to prevent wedging action or eccentric loading upon or against the structure. Ground surface on which backfill is to be placed shall be prepared as specified in paragraph PREPARATION OF GROUND SURFACE FOR EMBANKMENTS. Compaction requirements for backfill materials shall also conform to the applicable portions of paragraphs PREPARATION OF GROUND SURFACE FOR EMBANKMENTS, EMBANKMENTS, and SUBGRADE PREPARATION, and Section 02630 STORM-DRAINAGE SYSTEM; and Section 02316 EXCAVATION, TRENCHING, AND BACKFILLING FOR UTILITIES SYSTEMS. Compaction shall be accomplished by sheepsfoot rollers, pneumatic-tired rollers, steel-wheeled rollers, vibratory compactors, or other approved equipment.

3.7 PREPARATION OF GROUND SURFACE FOR EMBANKMENTS

3.7.1 General Requirements

Ground surface on which fill is to be placed shall be stripped of live, dead, or decayed vegetation, rubbish, debris, and other unsatisfactory material; plowed, disked, or otherwise broken up to a depth of 8 inches; pulverized; moistened or aerated as necessary to plus or minus 2.5 percent of optimum moisture; thoroughly mixed; and compacted to at least 90 percent laboratory maximum density. Compaction shall be accomplished by sheepsfoot rollers, pneumatic-tired rollers, steel-wheeled rollers, vibratory compactors, or other approved equipment. The prepared ground surface shall be scarified and moistened or aerated as required just prior to placement of embankment materials to assure adequate bond between embankment material and the prepared ground surface.

3.7.2 Frozen Material

Embankment shall not be placed on a foundation which contains frozen material, or which has been subjected to freeze-thaw action. This prohibition encompasses all foundation types, including the natural ground, all prepared subgrades (whether in an excavation or on an embankment) and all layers of previously placed and compacted earth fill which become the foundations for successive layers of earth fill. All material that freezes or has been subjected to freeze-thaw action during the construction work, or during periods of temporary shutdowns, such as, but not limited to, nights, holidays, weekends, winter shutdowns, or earthwork operations, shall be removed to a depth that is acceptable to the Contracting Officer and replaced with new material. Alternatively, the material shall be thawed, dried, reworked, and recompacted to the specified criteria before additional material is placed. The Contracting Officer will determine when placement of fill shall cease due to cold weather. The Contracting Officer may elect to use average daily air temperatures, and/or physical observation of the soils for his determination. Embankment material shall not contain frozen clumps of soil, snow, or ice.

3.8 EMBANKMENTS

3.8.1 Earth Embankments

Earth embankments shall be constructed from satisfactory materials free of organic or frozen material and rocks with any dimension greater than 3 inches. The material shall be placed in successive horizontal layers of loose material not more than 8 inches in depth. Each layer shall be spread uniformly on a soil surface that has been moistened or aerated as necessary, and scarified or otherwise broken up so that the fill will bond with the surface on which it is placed. After spreading, each layer shall be plowed, disked, or otherwise broken up; moistened or aerated as necessary; thoroughly mixed; and compacted to at least 90 percent laboratory maximum density. Compaction requirements for the upper portion of earth embankments forming subgrade for pavements shall be identical with those requirements specified in paragraph SUBGRADE PREPARATION. Compaction shall be accomplished by sheepsfoot rollers, pneumatic-tired rollers, steel-wheeled rollers, vibratory compactors, or other approved equipment.

3.8.2 Moisture Content

Satisfactory materials in each layer of fill shall contain the amount of moisture within the limits specified below. Materials that are not within the specified limits after compaction shall be reworked regardless of density. The moisture content after compaction shall be as uniform as practicable throughout any one layer and shall be within the limits of 2.5 percentage points above optimum moisture content and 2.5 percentage points below optimum moisture content. Materials which are too wet shall be disced, harrowed, plowed, bladed, or otherwise manipulated to reduce the moisture content to within the specified limits. Materials which are too dry shall be broken up, sprinkled, and thoroughly mixed to bring the moisture content uniformly up to within specified limits. In the event that materials reach the fill which are not within the limits of moisture content specified above, the Contractor shall either adjust the moisture content to bring it within the specified limits or remove it from the fill.

3.9 SUBGRADE PREPARATION

3.9.1 Construction

Subgrade shall be shaped to line, grade, and cross section, and compacted as specified. This operation shall include plowing, disking, and any moistening or aerating required to obtain specified compaction. Materials shall be moistened or aerated as necessary to plus or minus 2.0 percent of optimum moisture. Soft or otherwise unsatisfactory material shall be removed and replaced with satisfactory excavated material or other approved material as directed. Low areas resulting from removal of unsatisfactory material or excavation of rock shall be brought up to required grade with satisfactory materials, and the entire subgrade shall be shaped to line, grade, and cross section and compacted as specified. When the subgrade is in cut, the top 8 inches of subgrade shall be scarified, windrowed, moistened or aerated as necessary to plus or minus 2.0 percent of optimum moisture, thoroughly blended, reshaped, and compacted. The elevation of the finish subgrade shall not vary more than 0.05 foot from the established grade and cross section.

3.9.2 Moisture Content

Satisfactory materials in the subgrade shall contain the amount of moisture within the limits specified below. Materials that are not within the specified limits after compaction shall be reworked regardless of density. The moisture content after compaction shall be as uniform as practicable throughout the subgrade and shall be within the limits of 2.0 percentage points above optimum moisture content and 2.0 percentage points below optimum moisture content. Materials which are too wet shall be disced, harrowed, plowed, bladed, or otherwise manipulated to reduce the moisture content to within the specified limits. Materials which are too dry shall be broken up, sprinkled, and thoroughly mixed to bring the moisture content uniformly up to within specified limits.

3.9.3 Compaction

Compaction shall be accomplished by sheepsfoot rollers, pneumatic-tired rollers, steel-wheeled rollers, vibratory compactors, or other approved equipment.

3.9.3.1 Omitted

3.9.3.2 Subgrade for Pavements

Subgrade for pavements shall be compacted to at least 95 percent laboratory maximum density for a depth below the subgrade of 12 inches in fill or backfill and 6 inches in undisturbed native soil or cut.

3.9.3.3 Subgrade for Shoulders

Subgrade for shoulders shall be compacted to at least 95 percent laboratory maximum density for a depth of 6 inches below finish grade. In areas where the shoulder is to be grassed the top 6 inches shall be compacted to a density of at least 90 percent laboratory maximum density.

3.10 SHOULDER CONSTRUCTION

Shoulders shall be constructed of satisfactory excavated or borrow material or as otherwise shown or specified. Shoulders shall be constructed as soon as possible after adjacent paving is complete, but in the case of rigid pavements, shoulders shall not be constructed until permission of the Contracting Officer has been obtained. The entire shoulder area shall be compacted to at least the percentage of maximum density as specified in

paragraph SUBGRADE PREPARATION above. Compaction shall be accomplished by sheepsfoot rollers, pneumatic-tired rollers, steel-wheeled rollers, vibratory compactors, or other approved equipment. Shoulder construction shall be done in proper sequence in such a manner that adjacent ditches will be drained effectively and that no damage of any kind is done to the adjacent completed pavement. The completed shoulders shall be true to alignment and grade and shaped to drain in conformity with the cross section shown.

3.11 FINISHING

The surface of excavations, embankments, and subgrades shall be finished to a smooth and compact surface in accordance with the lines, grades, and cross sections or elevations shown. The degree of finish for graded areas shall be within 0.1 foot of the grades and elevations indicated except that the degree of finish for subgrades shall be specified in paragraph SUBGRADE PREPARATION. Gutters and ditches shall be finished in a manner that will result in effective drainage. The surface of areas to be turfed shall be finished to a smoothness suitable for the application of turfing materials.

3.12 PLACING TOPSOIL

On areas to receive topsoil, the surface shall be free of materials that would hinder planting or maintenance operations. The compacted subgrade soil shall be scarified to a depth of 2 inches by disking or plowing for the bonding of topsoil with the subsoil. Topsoil shall then be uniformly spread to a thickness of 4 inches, and graded to the elevations and slopes shown and left free of surface irregularities. Topsoil shall be compacted by one pass of a cultipacker, roller, or other approved equipment weighing 100 to 160 pounds per linear foot of roller. Topsoil shall not be placed when the subgrade is frozen, excessively wet, extremely dry, or in a condition otherwise detrimental to seeding, planting, or proper grading.

3.13 TESTING

Testing shall be performed by an approved commercial testing laboratory. Field in-place density shall be determined in accordance with ASTM D 1556. When test results indicate, as determined by the Contracting Officer, that compaction is not as specified, the material shall be removed, replaced and recompacted to meet specification requirements. Tests on recompacted areas shall be performed to determine conformance with specification requirements. Inspections and test results shall be certified by a registered professional civil engineer. These certifications shall state that the tests and observations were performed by or under the direct supervision of the engineer and that the results are representative of the materials or conditions being certified by the tests. The following number of tests, if performed at the appropriate time, will be the minimum acceptable for each type operation.

3.13.1 Fill and Backfill Material Gradation, Classification, and Moisture Content

One test per 100 cubic yards stockpiled or in-place source material. Gradation of fill and backfill material shall be determined in accordance with ASTM D 422 and ASTM D 1140 (wash No. 200, without hydrometer). Liquid limit and plasticity index shall be determined in accordance with ASTM D 4318. Classification of soils shall be in accordance with ASTM D 2487. Moisture content shall be determined in accordance with ASTM D 2216.

3.13.2 In-Place Densities

a. One test per 1,500 square feet, or fraction thereof, of each lift of fill or backfill areas compacted by other than hand-operated machines.

b. One test per 100 square feet, or fraction thereof, of each lift of fill or backfill areas compacted by hand-operated machines.

c. One test per 100 linear feet, or fraction thereof, of each lift of embankment or backfill for roads.

d. One test per 1,000 square feet, or fraction thereof, of subgrade in native soil or cut in all areas, excluding roads.

e. One test per 50 linear feet, or fraction thereof, of subgrade in embankment or backfill, and in native soil or cut in roads.

3.13.3 Moisture Content

In the stockpile(s), excavation, or borrow areas, a minimum of two tests, with one-point or two-point compaction tests, as appropriate, shall be performed per day per type of material or source of material being placed during stable weather conditions. During unstable weather, tests shall be made as dictated by local conditions to ensure the moisture content of the placed materials are within the specified limits.

3.13.4 Optimum Moisture and Laboratory Maximum Density

Tests shall be made for each type material or source of material including borrow material to determine the optimum moisture and laboratory maximum density values. Test procedures and frequency shall be as specified in paragraph TESTING of Section 02315 EXCAVATION, FILLING AND BACKFILLING FOR BUILDINGS.

3.13.5 Compaction Control

The tests required on materials prior to placement and the compaction control procedures and methods specified in Section 02315 EXCAVATION, FILLING AND BACKFILLING FOR BUILDINGS, paragraph TESTING (with exception of paragraph Tests Required During Placement) in regard to compaction control of soils, and utilizing the one-point or two-point compaction methods to relate field density data to laboratory test values, shall fully apply to and be considered a part of this specification section.

3.13.6 Tolerance Tests for Subgrades

Continuous checks on the degree of finish specified in paragraph SUBGRADE PREPARATION shall be made during construction of the subgrades.

3.14 SUBGRADE AND EMBANKMENT PROTECTION

During construction, embankments and excavations shall be kept shaped and drained. Ditches and drains along subgrade shall be maintained to drain effectively at all times. The finished subgrade shall not be disturbed by traffic or other operation and shall be protected and maintained by the Contractor in a satisfactory condition until ballast, subbase, base, or pavement is placed. The storage or stockpiling of materials on the finished subgrade will not be permitted. No subbase, base course, ballast,

or pavement shall be laid until the subgrade has been checked and approved, and in no case shall subbase, base, surfacing, pavement, or ballast be placed on a muddy, spongy, or frozen subgrade.

-- End of Section --

SECTION TABLE OF CONTENTS

DIVISION 02 - SITE WORK

SECTION 02315

EXCAVATION, FILLING AND BACKFILLING FOR BUILDINGS

08/98

PART 1 GENERAL

1.1 REFERENCES
1.2 DEFINITIONS
1.2.1 Degree of Compaction
1.2.2 Maximum Dry Density
1.2.3 Optimum Moisture Content
1.2.4 Subsurface Data
1.2.5 Related Work
1.2.5.1 Site Grading and Excavation and Backfilling for Utilities
1.2.5.2 Termite Protection
1.3 SUBMITTALS
1.4 CONTRACTOR'S OPTION

PART 2 PRODUCTS

2.1 MATERIALS
2.1.1 Satisfactory Materials
2.1.1.1 Natural Insitu Soil
2.1.1.2 Foundation Fill or Backfill
2.1.1.3 Fill or Backfill Adjacent to Walls
2.1.2 Unsatisfactory Materials
2.1.2.1 Natural Insitu Soil
2.1.2.2 Foundation Fill or Backfill
2.1.2.3 Fill or Backfill Adjacent to Walls
2.1.2.4 Wet or Soft Materials
2.1.3 Cohesionless and Cohesive Materials
2.1.4 Coarse Drainage Gravel
2.1.5 Fine Drainage Gravel
2.1.6 Filter Sand
2.2 CAPILLARY WATER BARRIER

PART 3 EXECUTION

3.1 OMITTED
3.2 TOPSOIL
3.3 EXCAVATION
3.4 DRAINAGE AND DEWATERING
3.4.1 Drainage
3.4.2 Dewatering
3.5 SHORING
3.6 CLASSIFICATION OF EXCAVATION
3.7 BLASTING
3.8 UTILITY AND DRAIN TRENCHES
3.9 BORROW
3.10 EXCAVATED MATERIALS
3.11 FINAL GRADE OF SURFACES TO SUPPORT CONCRETE
3.12 SUBGRADE PREPARATION

3.12.1 General
3.12.2 Special Compaction for Foundation Subgrades
3.12.3 Vibratory Rollers
3.13 FILLING AND BACKFILLING
3.13.1 General
3.13.2 Placement of Fill and Backfill Soil Materials
3.13.2.1 Placement of Coarse Drainage Gravel and Filter Sand
3.13.2.2 Placement of Fine Drainage Gravel Placed Around Structures
3.13.3 Moisture Content of Fill and Backfill Soil Materials
3.13.3.1 Moisture Content of Coarse Drainage Gravel and Filter Sand
3.13.3.2 Moisture Content of Fine Drainage Gravel
3.13.4 Compaction of Fill and Backfill Soil Materials
3.13.4.1 Omitted
3.13.4.2 Compaction of Coarse Drainage Gravel and Filter Sand
3.13.4.3 Compaction of Fine Drainage Gravel
3.14 TESTING
3.14.1 Types of Tests
3.14.1.1 Classification Tests
3.14.1.2 Moisture Content
3.14.1.3 Compaction Tests
3.14.1.4 Field Density Tests
3.14.2 Tests Required on Material Prior to Placement
3.14.2.1 General
3.14.2.2 Classification Tests
3.14.2.3 Compaction Tests
3.14.2.4 Moisture Content Tests
3.14.3 Tests Required During Placement
3.14.3.1 Field Density Tests
3.14.3.2 Moisture Content
3.14.3.3 Optimum Moisture and Laboratory Maximum Density
3.14.3.4 Time and Location of Tests
3.14.3.5 Field Density Control
3.14.4 Compaction Control
3.14.5 Compaction Procedure
3.14.5.1 General
3.14.5.2 One-Point Compaction Method
3.14.5.3 Two-Point Compaction Method
3.15 CAPILLARY WATER BARRIER
3.16 GRADING
3.17 SPREADING TOPSOIL
3.18 PROTECTION

-- End of Section Table of Contents --

CEGS-02315 (August 1998)

SECTION 02315

EXCAVATION, FILLING AND BACKFILLING FOR BUILDINGS
08/98

PART 1 GENERAL

1.1 REFERENCES

The publications listed below form a part of this specification to the extent referenced. The publications are referred to in the text by basic designation only.

AMERICAN SOCIETY FOR TESTING AND MATERIALS (ASTM)

ASTM C 33	(1997) Concrete Aggregate
ASTM D 422	(1963; R 1990) Particle-Size Analysis of Soils
ASTM D 1140	(1992) Amount of Material in Soils Finer Than the No. 200 (75-Micrometer) Sieve
ASTM D 1556	(1990; R 1996) Density and Unit Weight of Soil in Place by the Sand-Cone Method
ASTM D 1557	(1991) Laboratory Compaction Characteristics of Soil Using Modified Effort (56,000 ft-lbf/cu. ft. (2,700 kN-m/cu.m.))
ASTM D 2216	(1992) Laboratory Determination of Water (Moisture) Content of Soil, and Rock
ASTM D 2487	(1993) Classification of Soils for Engineering Purposes (Unified Soil Classification System)
ASTM D 4318	(1995a) Liquid Limit, Plastic Limit, and Plasticity Index of Soils

1.2 DEFINITIONS

1.2.1 Degree of Compaction

Degree of compaction is expressed as a percentage of the maximum density obtained by the test procedure presented in ASTM D 1557 abbreviated as percent laboratory maximum density.

1.2.2 Maximum Dry Density

The maximum dry density is expressed as the maximum density obtained when the soil is compacted in accordance with ASTM D 1557, abbreviated as laboratory maximum dry density.

1.2.3 Optimum Moisture Content

The optimum moisture content is the moisture content corresponding to the maximum dry density obtained by the test procedure presented in ASTM D 1557.

1.2.4 Subsurface Data

Logs of soil test borings and soil test data are shown on the drawings. These data represent the best subsurface information available; however, variations may exist in the subsurface between boring locations. The water level data indicate only the conditions at the particular time or times the information was obtained and may not indicate variations such as those caused by periods of drought or increased rainfall, seasonal fluctuations in rainfall, changes in the surface drainage pattern, or application of irrigation water.

1.2.5 Related Work

1.2.5.1 Site Grading and Excavation and Backfilling for Utilities

Site grading and excavation and backfilling for utilities beyond the 5-foot building line are covered under Section 02300 EARTHWORK and Section 02316 EXCAVATION, TRENCHING, AND BACKFILLING FOR UTILITIES SYSTEMS.

1.2.5.2 Termite Protection

Termite protection is specified under Section 02364 TERMITICIDE TREATMENT MEASURES FOR SUBTERRANEAN TERMITE CONTROL.

1.3 SUBMITTALS

Government approval is required for submittals with a "G" designation; submittals not having a "G" designation are for information only. When used, a designation following the "G" designation identifies the office that will review the submittal for the Government. The following shall be submitted in accordance with Section 01330 SUBMITTAL PROCEDURES:

SD-01, Preconstruction Submittals

Vibratory Rollers; G|RE

Data and specifications, at least 30 days prior to their use, of vibratory rollers proposed for compaction of the foundation subgrades for the addition to Building 4421 and the Munitions Storage structure.

SD-03, Product Data

Testing; G|RE

Testing facilities for the performance of laboratory soil tests must be approved by the Contracting Officer prior to work being performed.

SD-06 Test Reports

Field Density Tests
Testing of Fill and Backfill Materials

Copies of all laboratory and field test reports within 24 hours of the

completion of the test. Each report shall be properly identified. Test methods used and compliance with specified test standards shall be described. Summary sheets specified herein shall be submitted as indicated.

Inspection, Equipment and Corrective Action Reports

Copies of inspection reports, equipment specifications, and records of corrective action taken shall be submitted.

SD-07 Certificates

Certificates of Compliance

Certificates of compliance indicating conformance with specified requirements shall be furnished for capillary water barrier materials.

1.4 CONTRACTOR'S OPTION

In place of the filter sand specified herein and shown on the drawings the Contractor may use a geosynthetic drainage layer as specified in 02374 GEOSYNTNTHETIC DRAINAGE LAYER.

PART 2 PRODUCTS

2.1 MATERIALS

2.1.1 Satisfactory Materials

2.1.1.1 Natural Insitu Soil

Satisfactory materials for natural insitu soil supporting building foundations and/or slabs shall be limited to materials classified in ASTM D 2487 as GW, GP, GM, GP-GM, GW-GM, GC, GP-GC, GM-GC, SW, SP, SM, SW-SM, SC,SW-SC, SP-SM, SP-SC, CL, ML, CL-ML, CH, MH, and shall be free of trash, debris, roots or other organic matter, frozen material, and stones larger than 3 inches in any dimension.

2.1.1.2 Foundation Fill or Backfill

Satisfactory material for fill or backfill supporting building foundations and/or slabs shall be limited to materials classified in ASTM D 2487 as GW, GP, GM, GP-GM, GW-GM, GC, GP-GC, GM-GC, SW, SP, SM, SW-SM, SC,SW-SC, SP-SM, SP-SC, CL, ML, CL-ML, and shall be free of trash, debris, roots or other organic matter, frozen material, and stones larger than 3 inches in any dimension.

2.1.1.3 Fill or Backfill Adjacent to Walls

Satisfactory materials for fill or backfill adjacent to walls shall be limited to cohesionless, free draining materials classified in ASTM D 2487 as GW, GP, GM, SW, SP, SM, and SP-SM, and shall be free of trash, debris, roots or other organic matter, frozen material, and stones larger than 3 inches in any dimension.

2.1.2 Unsatisfactory Materials

2.1.2.1 Natural Insitu Soil

Unsatisfactory materials for fill or backfill supporting building

foundations and/or slabs shall be materials classified in ASTM D 2487 as Pt, OH and OL and any other materials not defined as satisfactory. The Contracting Officer shall be notified of any contaminated materials.

2.1.2.2 Foundation Fill or Backfill

Unsatisfactory material for fill or backfill supporting building foundations and/or slabs shall be materials classified in ASTM D 2487 as Pt, OH, OL, CH and MH.

2.1.2.3 Fill or Backfill Adjacent to Walls

Unsatisfactory materials for fill or backfill adjacent to walls shall be materials classified in accordance with ASTM D 2487 as Pt, OH, OL, GC, SC, CL, CH, ML and MH, GP-GM, GW-GM, GC, GP-GC, GM-GC, SW-SM, SC, SW-SC, SP-SC, CL, ML, CL-ML.

2.1.2.4 Wet or Soft Materials

Materials determined by the Contracting Officer as too wet or too soft to provide a stable subgrade, foundation, or fill will be classified as unsatisfactory regardless of classification. However, if such materials do meet the appropriate ASTM D 2487 classification, the Contractor shall at no additional cost to the Government, recondition the materials.

2.1.3 Cohesionless and Cohesive Materials

Cohesionless materials include materials classified in ASTM D 2487 as GW, GP, SW, and SP. Cohesive materials include materials classified as GC,GP-GC, GM-GC, SW-SC, SP-SC, SC, ML, CL, CL-ML, MH, and CH and the unsatisfactory organic materials Pt, OL and OH. Materials classified as GM, GP-GM, GW-GM, SM, SW-SM, and SP-SM will be identified as cohesionless only when the fines have a plasticity index of zero; otherwise they will be considered cohesive.

2.1.4 Coarse Drainage Gravel

Coarse gravel material for the rectangular toe drains shall be obtained from a source provided by the Contractor. Coarse drainage gravel shall be non-calcareous, composed of tough durable particles, and shall not contain any organic material or soft, friable particles in quantities. Blast furnace slag will not be permitted. The gravel material in-place shall meet the requirements of AASHTO M 43, Size No. 57, coarsely graded:

SIEVE SIZE U.S. STANDARD SQUARE MESH	PERCENTAGE BY WEIGHT PASSING INDIVIDUAL SIEVE
1-1/2 inches	100
1 - inch	95-100
1/2 - inch	25-60
No. 4	0-10
No. 8	0-5

2.1.5 Fine Drainage Gravel

Fine drainage gravel shall be obtained from a source provided by the Contractor. Fine drainage gravel material shall be non-calcareous, composed of tough durable particles, and shall not contain organic

material. The fine drainage gravel in-place shall meet the requirements of AASHTO M 43, Size No. 8, with the following gradation:

SIEVE SIZE U.S. STANDARD SQUARE MESH	PERCENTAGE BY WEIGHT PASSING INDIVIDUAL SIEVE
1/2-inch	100
3/8-inch	85-100
No. 4	10-30
No. 8	0-10
No. 16	0-5

2.1.6 Filter Sand

Fine aggregate for the filter sand in-place shall meet the quality requirements of ASTM C 33 grading for fine aggregate with additional limits on the allowable percentage passing the No. 200 sieve as specified below.

SIEVE SIZE U.S. STANDARD SQUARE MESH	PERCENTAGE BY WEIGHT PASSING INDIVIDUAL SIEVE
3/8-inch	100
No. 4	95-100
No. 16	50-85
No. 100	2-10
No. 200	0-5

Additionally, the filter sand shall not contain any organic matter or soft friable particles.

2.2 CAPILLARY WATER BARRIER

Capillary water barrier shall consist of clean, crushed, nonporous stone, crushed gravel, or uncrushed gravel conforming to the requirements of ASTM C 33 for coarse aggregate grading size 57, 67, 7, or 78.

PART 3 EXECUTION

3.1 OMITTED

3.2 TOPSOIL

Topsoil shall be stripped to full depth below existing grade within the designated excavations and grading lines. Topsoil shall be spread on areas already graded and prepared for topsoil, or transported and deposited in stockpiles convenient to areas that are to receive topsoil later, or at locations indicated or specified. Excess topsoil shall be disposed of as specified for excess excavated material.

3.3 EXCAVATION

Excavation shall conform to the dimensions and elevations indicated for each building, structure, and footing except as specified, and shall include trenching for utility and foundation drainage systems to a point 5 feet beyond the building line of each building and structure, excavation for outside grease interceptors and all work incidental thereof. Excavation shall extend a sufficient distance from walls and footings to

allow for placing and removal of forms. Excavations below indicated depths will not be permitted except to remove unsatisfactory material. Unsatisfactory material encountered below the grades shown shall be removed as directed and replaced with satisfactory material; and payment will be made in conformance with the CHANGES clause of the CONTRACT CLAUSES. Satisfactory material removed below the depths indicated, without specific direction of the Contracting Officer, shall be replaced, at no additional cost to the Government, with satisfactory materials to the indicated excavation grade. Satisfactory material shall be placed and compacted as specified in paragraph FILLING AND BACKFILLING. Determination of elevations and measurements of approved overdepth excavation of unsatisfactory material below grades indicated shall be done under the direction of the Contracting Officer.

3.4 DRAINAGE AND DEWATERING

3.4.1 Drainage

Surface water shall be directed away from excavation and construction sites to prevent erosion and undermining of foundations. Diversion ditches, dikes and grading shall be provided and maintained as necessary during construction. Excavated slopes and backfill surfaces shall be protected to prevent erosion and sloughing. Excavation shall be performed so that the site, the area immediately surrounding the site, and the area affecting operations at the site shall be continually and effectively drained.

3.4.2 Dewatering

Groundwater flowing toward or into excavations shall be controlled to prevent sloughing of excavation slopes and walls, boils, uplift and heave in the excavation and to eliminate interference with orderly progress of construction. French drains, sumps, ditches or trenches will not be permitted within 3 feet of the foundation of any structure, except with specific written approval, and after specific contractual provisions for restoration of the foundation area have been made. Control measures shall be taken by the time the excavation reaches the water level in order to maintain the integrity of the in situ material. While the excavation is open, the water level shall be maintained continuously, at least 3 feet below the working level. The Contractor shall provide drainage and dewatering as required to ensure that all footing excavations are accomplished with the subgrade soils remaining dry and firm until after the footings are placed and backfilled.

3.5 SHORING

Shoring, including sheet piling, shall be furnished and installed as necessary to protect workmen, banks, adjacent paving, structures, and utilities. Shoring, bracing, and sheeting shall be removed as excavations are backfilled, in a manner to prevent caving.

3.6 CLASSIFICATION OF EXCAVATION

Excavation will be unclassified regardless of the nature of material encountered.

3.7 BLASTING

Blasting will not be permitted.

3.8 UTILITY AND DRAIN TRENCHES

Trenches for underground utilities systems and drain lines shall be excavated to the required alignments and depths. The bottoms of trenches shall be graded to secure the required slope and shall be tamped if necessary to provide a firm pipe bed. Recesses shall be excavated to accommodate bells and joints so that pipe will be uniformly supported for the entire length.

3.9 BORROW

Where satisfactory materials are not available in sufficient quantity from required excavations, approved materials shall be obtained as specified in Section 02300 EARTHWORK.

3.10 EXCAVATED MATERIALS

Satisfactory excavated material required for fill or backfill shall be placed in the proper section of the permanent work required under this section or shall be separately stockpiled if it cannot be readily placed. Satisfactory material in excess of that required for the permanent work and all unsatisfactory material shall be disposed of as specified in Section 02300 EARTHWORK. No satisfactory material shall be wasted or used for the convenience of the Contractor unless so authorized. Stockpiles and wasted materials shall be placed, graded, and shaped for proper drainage, giving due consideration to drainage from adjacent properties.

3.11 FINAL GRADE OF SURFACES TO SUPPORT CONCRETE

Excavation to final grade shall not be made until just before the capillary water barrier or concrete is to be placed. All surfaces shall be protected from erosion resulting from ponding or flow of water.

3.12 SUBGRADE PREPARATION

3.12.1 General

Unsatisfactory material in surfaces to receive fill or in excavated areas shall be removed and replaced with satisfactory materials as directed by the Contracting Officer. The surface shall be scarified to a depth of 6 inches before the fill is started. Sloped surfaces steeper than 1 vertical to 4 horizontal shall be plowed, stepped, benched, or broken up so that the fill material will bond with the existing material. When subgrades are less than the specified density, the ground surface shall be broken up to a minimum depth of 6 inches, pulverized, and compacted to the specified density. When the subgrade is part fill and part excavation or natural ground, the excavated or natural ground portion shall be scarified to a depth of 12 inches and compacted as specified for the adjacent fill. Material shall not be placed on surfaces that are muddy, frozen, or contain frost. Compaction shall be accomplished by sheepsfoot rollers, pneumatic-tired rollers, steel-wheeled rollers, or other approved equipment well suited to the soil being compacted. Material shall be moistened or aerated as necessary to plus or minus 2.5 percent of optimum moisture. Minimum subgrade density shall be as specified in paragraph FILLING AND BACKFILLING.

3.12.2 Special Compaction for Foundation Subgrades

Due to the presence of loose near-surface soils, special compaction is required for the foundation subgrades for both the addition to Building

4421 and the Munitions Storage structure. Following removal of topsoil and before any excavation or the placement of any fill material, the foundation areas of the addition to Building 4421 and the Munitions Storage structure, to the 5-foot line beyond the building limits, shall receive vibratory compaction with a compactor meeting the requirements of the following paragraph 3.12.3. However, in the case of the addition to Building 4421, the compactor shall operate no closer than 10 feet to the existing Building4421. The compaction shall be accomplished by making a minimum of eight complete passes with the specified roller in each of eight perpendicular directions in the presence of the Contracting Officer. The compaction shall be performed only when weather conditions permit; compaction shall not be performed on wet or saturated subgrades. Notify the Contracting Officer 3 days prior to performing the special compaction.

3.12.3 Vibratory Rollers

Vibratory rollers for compacting the subgrades of the foundations for the addition to Building 4421 and the Munitions Storage structure shall be equipped with a smooth steel compaction drum and shall be operated at a frequency of vibration during compaction operations between 1100 and 1500 vpm. Vibratory rollers may be either towed or self-propelled and shall have an unsprung drum weight that is a minimum of 60 percent of the rollers' static weight. Tower rollers shall have at least 90 percent of their weight transmitted to the ground through the compaction drum when the roller is standing in a level position hitched to the towing vehicle. Rollers shall have a minimum static weight of 20,000 pounds, a minimum dynamic force of 40,000 pounds when operating at 1400 vpm, and an applied force not less than 9,000 pounds per foot of compaction drum length. The level of amplitude and vibration frequency shall be maintained uniform during compaction. The Contractor shall furnish sufficient data, drawings, and computation for verification of the above specifications, and the character and efficiency of this equipment shall be subject to the approval of the Contracting Officer.

3.13 FILLING AND BACKFILLING

3.13.1 General

Filling and backfilling shall not begin until construction below finish grade has been approved, underground utilities systems have been inspected, tested and approved, forms removed and the excavation cleaned of trash and debris. Backfill shall not be placed in areas that are wet, muddy, contain organic materials or are otherwise unacceptable to the Contracting Officer. Satisfactory materials shall be used in bringing fills and backfills to the lines and grades indicated and for replacing unsatisfactory materials. Satisfactory material shall be free from roots and other organic matter, trash, debris, frozen materials, and stones larger than 3 inches in any dimension. Where pipe and or utility lines are coated or wrapped for protection against corrosion, the backfill material up to an elevation of 2 feet above sewer lines and 1 foot above other utility lines shall be free from stones larger than 1 inch in any dimension.

3.13.2 Placement of Fill and Backfill Soil Materials

Satisfactory materials shall be placed in horizontal layers not exceeding 8 inches in loose thickness, or 4 inches in loose thickness where hand-operated compactors are used. After placing, each layer shall be

plowed, disked, or otherwise broken up, moistened or aerated as necessary, thoroughly mixed and compacted as specified. Backfill shall be brought to the indicated finish grade. Heavy equipment for spreading and compacting backfill shall not be operated closer to foundation or retaining walls than a distance equal to the height of backfill above the top of footing; the area remaining shall be compacted in layers not more than 4 inches in loose thickness with power-driven hand tampers suitable for the material being compacted. Backfill shall be placed carefully around pipes or tanks to avoid damage to coatings, wrappings, or tanks. Backfill shall not be placed against foundation walls prior to 7 days after completion of each side of the wall and sloped to drain away from the wall. Prior to compaction, each layer shall be thoroughly and uniformly blended throughout its entire thickness by discing.

3.13.2.1 Placement of Coarse Drainage Gravel and Filter Sand

Coarse drainage gravel and filter sand shall be placed and spread in layers not more than 12 inches in uncompacted thickness. The method of placement of all gravel and sand material shall be controlled to minimize segregation of particle sizes and contamination with other embankment materials.

3.13.2.2 Placement of Fine Drainage Gravel Placed Around Structures

Fine drainage gravel placed for drainage around around bunker structures shall be placed in horizontal layers not exceeding 8 inches in loose lift thickness, or within 4 feet when hand operated compactors are used. After placing, each layer shall be uniformly spread, moistened or aerated as necessary to obtain the specified moisture content, thoroughly mixed and compacted as specified. Backfilling shall not begin until construction below finish grade has been approved, forms removed, and the excavation cleaned of trash and debris. Power driven hand operated compactors shall be used along the closure structure for compaction within 2 feet of concrete structures. Backfill shall not be placed against concrete prior to 7 days after placement. As far as practicable, backfill shall be brought up evenly on each side of the structure and sloped to drain away from the structure.

3.13.3 Moisture Content of Fill and Backfill Soil Materials

Satisfactory materials in each layer of fill or backfill shall contain the amount of moisture within the limits specified below. Materials that are not within the specified limits after compaction shall be reworked regardless of density. The moisture content after compaction shall be as uniform as practicable throughout any one layer and shall be within the limits of 2.5 percentage points above optimum moisture content and 2.5 percentage points below optimum moisture content. Materials which are too wet shall be disced, harrowed, plowed, bladed, or otherwise manipulated to reduce the moisture content to within the specified limits. Materials which are too dry shall be broken up, sprinkled, and thoroughly mixed to bring the moisture content uniformly up to within specified limits. In the event that materials reach the fill which are not within the limits of moisture content specified above, the Contractor shall either adjust the moisture content to bring it within the specified limits or remove it from the fill.

3.13.3.1 Moisture Content of Coarse Drainage Gravel and Filter Sand

The moisture content shall be controlled such that hauling, spreading, and

compacting equipment can operate with normal procedure without excessive rutting of the fill. If the material is too wet or too dry to facilitate proper compaction, the coarse drainage gravel or filter sand shall be wetted or dried as required.

3.13.3.2 Moisture Content of Fine Drainage Gravel

Fine drainage gravel shall be placed, worked, and compacted in a saturated condition. The moisture content after compaction shall be as uniform as practicable throughout any one layer of fine drainage gravel.

3.13.4 Compaction of Fill and Backfill Soil Materials

Compaction shall be accomplished by sheepsfoot roller, pneumatic-tired rollers, smooth-drum vibratory rollers or other approved equipment well suited to the soil being compacted. Generally, sheepsfoot rollers are best suited for compacting cohesive material while smooth-drum vibratory rollers are best suited for compacting cohesionless materials. In areas inaccessible to heavy equipment, or where in the opinion of the Contracting Officer, use of heavy equipment may cause damage to pipes, conduits, or structures, approved power-driven hand tampers suitable for the material being compacted shall be used. Each layer of fill and backfill shall be compacted to not less than the percentage of maximum density specified below.

	Percent Laboratory Maximum Density
Fill, Embankment, and Backfill	
Under structures, building slabs, steps, paved areas, and in trenches	90
Beside structures, footings, and walls	90
Under sidewalks and grassed areas	85
Subgrade (Top of Fill, Embankment, and Backfill)	
Under building slabs, steps, and paved areas, top 12 inches	90
Under footings, top 12 inches	90
Under sidewalks and grassed areas, top 6 inches	85
Subgrade (Undisturbed Native Soil or Cut)	
Under building slabs, steps, and paved areas, top 6 inches	90
Under footings, top 6 inches	90

	Percent Laboratory Maximum Density
Under sidewalks and grassed areas, top 6 inches	85

Approved compacted subgrades that are disturbed by the Contractor's operations or adverse weather shall be scarified and recompacted to the required density prior to further construction thereon. Recompaction over underground utilities and heating lines shall be by hand tamping. For compacted subgrades and/or any lift of fill or backfill that fails to meet the specified density and/or moisture requirements, the entire subgrade and/or entire lift of fill shall be broken up to a minimum depth of 8 inches, pulverized, the moisture content adjusted as necessary, and recompacted to the specified density, even if this action requires the removal and replacement of subsequently placed satisfactory lifts of fill. Tests on recompacted areas shall be performed to determine conformance with specification requirements. Lifts of fill placed without being field density tested will not be accepted as satisfactory under any circumstances.

3.13.4.1 Omitted

3.13.4.2 Compaction of Coarse Drainage Gravel and Filter Sand

Coarse drainage gravel placed in the drains shall be placed in maximum 12 inch loose lifts and compacted by not less than four (4) complete coverages with a vibratory roller. Each lift of gravel within confined spaces which is not accessible to rollers shall be compacted by at least 3 complete coverages with a vibratory plate compactor and as many additional coverages as necessary to achieve the same density obtained with full-size compaction equipment. Filter sand placed along the existing rock fill shall be compacted in accordance with the requirements for the adjacent select earth fill material.

3.13.4.3 Compaction of Fine Drainage Gravel

Fine drainage gravel placed in the drains shall be placed in maximum 12 inch loose lifts and compacted by not less than four (4) complete coverages with a vibratory roller. Each lift of gravel within confined spaces which is not accessible to rollers shall be compacted by at least three 3 complete coverages with a vibratory plate compactor and as many additional coverages as necessary to achieve the same density obtained with full-size compaction equipment.

3.14 TESTING

Testing shall be the responsibility of the Contractor and shall be performed by an approved commercial testing laboratory at no additional cost to the Government. Three copies of test results shall be included with the Contractor's daily construction quality control reports. Inspections and test results shall be certified by a registered professional civil engineer. These certifications shall state that the tests and observations were performed by or under the direct supervision of the engineer and that the results are representative of the materials or conditions being certified by the tests.

3.14.1 Types of Tests

3.14.1.1 Classification Tests

Classification of soils shall be determined in accordance with ASTM D 2487.

a. Liquid Limit and Plasticity Index: Liquid limit and plasticity index shall be determined in accordance with ASTM D 4318.

b. Sieve Analysis: Sieve analysis (wash No. 200, without hydrometer) shall be performed in accordance with ASTM D 422 and ASTM D 1140.

3.14.1.2 Moisture Content

Moisture content shall be determined in accordance with ASTM D 2216.

3.14.1.3 Compaction Tests

Compaction tests shall be performed by the test procedure presented in ASTM D 1557. Adequate testing shall be conducted to establish at least five points with at least one point falling within plus or minus 1.5 percentage points of the plotted optimum moisture content.

3.14.1.4 Field Density Tests

Field in-place densities shall be determined by the sand displacement method in accordance with ASTM D 1556. The Contracting Officer reserves the right to direct the locations where field density tests are to be performed. SAS Form 865 shall be used for recording results of field density tests and submitted with the daily construction quality control reports. Results of density tests shall be maintained on CESAS Form 1177 - Summary of Field Density Tests and an updated copy submitted each week. The Contracting Officer will furnish Government forms to the Contractor.

3.14.2 Tests Required on Material Prior to Placement

3.14.2.1 General

All material from required excavations and borrow shall be tested prior to incorporation into the permanent work. The tests shall be performed on samples representative of the various materials to be utilized. Samples shall be carefully selected to represent the full range of materials to be used as fill and/or backfill. The following minimum number of tests shall be performed on the materials prior to the placement of the materials in the work. Additional tests of these types shall be performed when materials of different classification or compaction characteristics are encountered to determine the properties of the materials. The Contracting Officer reserves the right to direct additional testing as required.

3.14.2.2 Classification Tests

Classification tests shall be performed to determine the acceptability of materials in accordance with paragraph MATERIALS. Such tests on materials proposed for use as fill and/or backfill shall be performed prior to their use. Sufficient classification tests shall be performed to define the full range of all materials proposed for use. A minimum of two classification tests shall be performed on each material classified as satisfactory for use. The Contracting Officer may at any time require additional classification tests to confirm material acceptability.

3.14.2.3 Compaction Tests

Compaction tests shall be performed prior to commencement of construction in order to determine the moisture-density relationships of all satisfactory materials proposed for use as fill and/or backfill. For each compaction test performed, an associated or companion classification test and moisture content test shall be performed. Compaction tests shall be performed in sufficient number to establish the full range of maximum dry density and optimum water content. A minimum of 6 compaction tests shall be performed on materials classified as satisfactory for use. Samples for these tests shall not be obtained from the same locations. The Contracting Officer reserves the right to direct where samples for additional compaction tests are obtained. In the event that the compaction characteristics of materials having the same classification vary appreciably, additional compaction tests shall be performed.

3.14.2.4 Moisture Content Tests

Moisture content tests shall be performed on all materials proposed for use as fill and/or backfill to determine their suitability for use in accordance with paragraph Moisture Content. Moisture content tests shall be performed in sufficient number to determine the full range of moisture contents. Moisture content test shall be performed for each compaction test and as required to determine acceptability of material prior to placement. Not less than two moisture content tests shall be performed on each material classified as satisfactory for use.

3.14.3 Tests Required During Placement

3.14.3.1 Field Density Tests

Acceptance of the compacted materials shall be determined by the results of field in-place density tests. Density tests in randomly selected locations shall be performed in the material and at the minimum frequency specified below:

Material Type	Location of Material	Minimum Test Frequency
Fill, embankment and backfill	Beneath structures, to the 5-foot building line	One test per lift per each increment or fraction of 2,500 square feet
Fill and backfill	Areas beside structures, footings, walls, and areas enclosed by grade beams that are compacted by hand operated compaction equipment	One test per foot of depth per each increment or fraction of 200 square feet or for each 50 linear feet of long narrow (less than 3 feet wide) fills 50 feet or more in length
Subgrade	Under building slabs on grade and paved areas	One test per each increment or

Material Type	Location of Material	Minimum Test Frequency
		fraction of 1500 square feet
Subgrade	Under footings	One test per each column footing and for each increment or fraction of 75 linear feet of wall footings

3.14.3.2 Moisture Content

In the stockpile(s), excavation, or borrow areas, a minimum of two tests, with one-point or two-point compaction tests, as appropriate, shall be performed per day per type of material or source of material being placed during stable weather conditions. During unstable weather, tests shall be made as dictated by the local conditions to ensure the moisture content of the placed materials are within the specified limits.

3.14.3.3 Optimum Moisture and Laboratory Maximum Density

One representative test shall be performed per 250 cubic yards of fill, embankment and backfill, or when any change in material occurs which may affect the optimum moisture content or laboratory maximum density.

3.14.3.4 Time and Location of Tests

The Government reserves the right to specify the location of any test. Whenever there is doubt as to the adequacy of the testing or validity of results, the Contracting Officer may direct that additional tests be performed, at no additional cost to the Government. The field density tests shall be performed at times and locations which will assure the specified compaction is being obtained throughout each lift for all materials placed. Additional field density tests shall be performed in areas where the Contracting Officer determines there is reason to doubt the adequacy of the natural subgrade.

3.14.3.5 Field Density Control

The results of field density tests shall be compared to results of compaction tests performed as required elsewhere in these specifications by the use of the appropriate procedures described in the following paragraphs.

3.14.4 Compaction Control

For fine grained (clayey and silty) soils and for sands with appreciable fines such that normal shaped compaction curves are obtained, results of all compaction tests shall be plotted on a common plot as a family of curves. For each field density test performed, a one-point compaction test, with additional points as needed, shall be performed on the same material on which the field density test was conducted. The one-point compaction test shall be performed on the dry side of the optimum moisture content. For comparison of field density data to the proper laboratory compaction test results, the procedures for the one-point and/or two-point

compaction control methods as described in paragraph Compaction Procedure, shall be used. Compaction curves plotted on the family of curves shall be of such a scale that the optimum moisture content can be interpreted to the nearest 0.1 percent and the maximum dry density can be interpreted to the nearest 0.1 pcf. When a one-point test plots outside the range of the family of curves, an additional five-point compaction test shall be performed.

3.14.5 Compaction Procedure

3.14.5.1 General

The following paragraphs describe methods of relating field density data to desired or specified values. Compaction control of soils requires comparison of fill water content and/or dry density values obtained in field density tests with optimum water content and/or maximum dry density. At a minimum, control shall be in accordance with the One-Point Compaction Method. Where conditions require, the Two-Point Compaction Method shall be used.

3.14.5.2 One-Point Compaction Method

The material from the field density test is allowed to dry to a water content on the dry side of estimated optimum, and then compacted using the same equipment and procedures used in the five-point compaction test. Thorough mixing is required to obtain uniform drying; otherwise, results obtained may be erroneous. The water content and dry density of the compacted sample are determined and then used to estimate its optimum water content and maximum dry density as illustrated in Figure 1 at the end of this section. In Figure 1, the line of optimums is well defined and the compaction curves are approximately parallel to each other, consequently, the one-point compaction method could be used with a relatively high degree of confidence. However, in Figure 2 at the end of this section, the curves are not parallel to each other and in several instances will cross if extended on the dry side. Consequently, the correct curve cannot be determined from the one-point method; therefore, the two-point compaction method should be used. The one-point method should be used only when the data define a relatively good line of optimums.

3.14.5.3 Two-Point Compaction Method

In the two-point test, one sample of material from the location of the field density test is compacted at the fill water content if thought to be at or on the dry side of optimum water content (otherwise, reduced by drying to this condition) using the same equipment and procedures used in the five-point compaction test. A second sample of material is allowed to dry back about 2 to 3 percentage points dry of the water content of the first sample and then compacted in the same manner. At least one point shall fall within 3 percent of the line of optimums. After compaction, the water contents and dry densities for the two samples are determined. The results are used to identify the appropriate compaction curve for the material being tested as shown in Figure 2 at the end of this section. The data shown in Figure 2 warrant the use of the two-point compaction test because the five-point compaction curves are not parallel. Using point A only, as in the one-point test method, would result in appreciable error as the shape of the curve would not be defined. The estimated compaction curve can be more accurately defined by two compaction points.

3.15 CAPILLARY WATER BARRIER

Capillary water barrier under concrete floor and area-way slabs on grade shall be placed directly on the subgrade and shall be compacted with a minimum of two passes of a hand-operated plate-type vibratory compactor.

3.16 GRADING

Areas within 5 feet outside of each building and structure line shall be constructed true-to-grade, shaped to drain, and shall be maintained free of trash and debris until final inspection has been completed and the work has been accepted.

3.17 SPREADING TOPSOIL

Areas outside the building lines from which topsoil has been removed shall be topsoiled. The surface shall be free of materials that would hinder planting or maintenance operations. The compacted subgrade soil shall be scarified to a depth of 2 inches by disking or plowing for the bonding of topsoil with the subsoil. Topsoil shall then be uniformly spread to a thickness of 4 inches and graded to the elevations and slopes shown and left free of surface irregularities. Topsoil shall be compacted by one pass of a cultipacker, roller, or other approved equipment weighing 100 to 160 pounds per linear foot of roller. Topsoil shall not be placed when the subgrade is frozen, excessively wet, extremely dry, or in a condition otherwise detrimental to seeding, planting, or proper grading.

3.18 PROTECTION

Settlement or washing that occurs in graded, topsoiled, or backfilled areas prior to acceptance of the work, shall be repaired and grades reestablished to the required elevations and slopes.

-- End of Section --

SECTION TABLE OF CONTENTS

DIVISION 02 - SITE WORK

SECTION 02316

EXCAVATION, TRENCHING, AND BACKFILLING FOR UTILITIES SYSTEMS

11/97

PART 1 GENERAL

1.1 REFERENCES
1.2 OMITTED
1.3 DEGREE OF COMPACTION
1.4 SUBMITTALS

PART 2 PRODUCTS

2.1 MATERIALS
2.1.1 Satisfactory Materials
2.1.2 Unsatisfactory Materials
2.1.3 Cohesionless and Cohesive Materials
2.1.4 Omitted
2.1.5 Unyielding Material
2.1.6 Unstable Material
2.1.7 Select Granular Material
2.1.8 Initial Backfill Material
2.2 PLASTIC MARKING TAPE
2.3 TRACER WIRE

PART 3 EXECUTION

3.1 EXCAVATION
3.1.1 Trench Excavation Requirements
3.1.1.1 Bottom Preparation
3.1.1.2 Removal of Unyielding Material
3.1.1.3 Removal of Unstable Material
3.1.1.4 Excavation for Appurtenances
3.1.1.5 Jacking, Boring, and Tunneling
3.1.2 Stockpiles
3.2 BACKFILLING AND COMPACTION
3.2.1 Trench Backfill
3.2.1.1 Replacement of Unyielding Material
3.2.1.2 Replacement of Unstable Material
3.2.1.3 Bedding and Initial Backfill
3.2.1.4 Final Backfill
3.2.2 Backfill for Appurtenances
3.3 SPECIAL REQUIREMENTS
3.3.1 Water Lines
3.3.2 Omitted
3.3.3 Plastic Marking Tape
3.3.4 Tracer Wire
3.4 TESTING
3.4.1 Testing Facilities
3.4.2 Testing of Backfill Materials
3.4.3 Field Density Tests
3.4.3.1 Compaction Control

3.4.4 Displacement of Sewers

-- End of Section Table of Contents --

CEGS-02316 (November 1997)

Includes changes through Notice 1 (July 1998)

SECTION 02316

EXCAVATION, TRENCHING, AND BACKFILLING FOR UTILITIES SYSTEMS
11/97

PART 1 GENERAL

1.1 REFERENCES

The publications listed below form a part of this specification to the extent referenced. The publications are referred to in the text by basic designation only.

AMERICAN SOCIETY FOR TESTING AND MATERIALS (ASTM)

ASTM C 136	(1996) Sieve Analysis of Fine and Coarse Aggregates
ASTM D 422	(1963; R 1990) Particle-Size Analysis of Soils
ASTM D 1140	(1992) Amount of Material in Soils Finer Than the No. 200 (75-Micrometer) Sieve
ASTM D 1556	(1990; R 1996) Density and Unit Weight of Soil in Place by the Sand-Cone Method
ASTM D 1557	(1991) Laboratory Compaction Characteristics of Soil Using Modified Effort (56,000 ft-lbf/cu. ft. (2,700 kN-m/cu. m.))
ASTM D 2487	(1993) Classification of Soils for Engineering Purposes (Unified Soil Classification System)

1.2 OMITTED

1.3 DEGREE OF COMPACTION

Degree of compaction shall be expressed as a percentage of the maximum density obtained by the test procedure presented in ASTM D 1557.

1.4 SUBMITTALS

Government approval is required for submittals with a "G" designation; submittals not having a "G" designation are for information only. When used, a designation following the "G" designation identifies the office that will review the submittal for the Government. The following shall be submitted in accordance with Section 01330 SUBMITTAL PROCEDURES:

SD-04 Samples

Tracer Wire; G|RE

Sample of tracer wire, including manufacturer's descriptive technical literature, specifications, and installation instructions. Sample and information shall be submitted at least 60 days prior to the initial installation of any tracer wire.

SD-06 Test Reports

Field Density Tests

Testing of Fill and Backfill Materials

Copies of all laboratory and field test reports within 24 hours of the completion of the test.

SD-07 Certificates

Testing; G|RE

Qualifications of the commercial testing laboratory.

PART 2 PRODUCTS

2.1 MATERIALS

2.1.1 Satisfactory Materials

Satisfactory materials shall comprise any materials classified by ASTM D 2487 as GW, GP, GM, GP-GM, GW-GM, GC, GP-GC, GM-GC, SW, SP, SM, SW-SM, SC, SW-SC, SP-SM, SP-SC, CL, ML, and CL-ML.

2.1.2 Unsatisfactory Materials

Materials which do not comply with the requirements for satisfactory materials are unsatisfactory. Unsatisfactory materials also include man-made fills, trash, refuse, or backfills from previous construction. Unsatisfactory material also includes material classified as satisfactory which contains root and other organic matter, frozen material, and stones larger than 3 inches. The Contracting Officer shall be notified of any contaminated materials.

2.1.3 Cohesionless and Cohesive Materials

Cohesionless materials include materials classified in ASTM D 2487 as GW, GP, SW, and SP. Cohesive materials include materials classified as GC, GP-GC, GM-GC, SW-SC, SP-SC, SC, ML, CL, CL-MH, MH, and CH and the unsatisfactory organic materials Pt, OL and OH. Materials classified as GM, GP-GM, GW-GM, SM, SW-SM, and SP-SM will be identified as cohesionless only when the fines have a plasticity index of zero; otherwise they will be considered cohesive.

2.1.4 Omitted

2.1.5 Unyielding Material

Unyielding material shall consist of rock and gravelly soils with stones greater than 3 inches in any dimension or as defined by the pipe

manufacturer, whichever is smaller.

2.1.6 Unstable Material

Unstable material shall consist of materials too wet to properly support the utility pipe, conduit, or appurtenant structure.

2.1.7 Select Granular Material

Select granular material shall consist of well-graded sand, gravel, crushed gravel, crushed stone or crushed slag composed of hard, tough and durable particles, and shall contain not more than 10 percent by weight of material passing a No. 200 mesh sieve and no less than 95 percent by weight passing the l inch sieve. The maximum allowable aggregate size shall be 2 inches, or the maximum size recommended by the pipe manufacturer, whichever is smaller.

2.1.8 Initial Backfill Material

Initial backfill shall consist of select granular material or satisfactory materials free from rocks 3 inches or larger in any dimension or free from rocks of such size as recommended by the pipe manufacturer, whichever is smaller. When the pipe is coated or wrapped for corrosion protection, the initial backfill material shall be free of stones larger than 1 inch in any dimension or as recommended by the pipe manufacturer, whichever is smaller.

2.2 PLASTIC MARKING TAPE

Plastic marking tape shall be acid and alkali-resistant polyethylene film, 6 inches wide with minimum thickness of 0.004 inch. Tape shall have a minimum strength of 1750 psi lengthwise and 1500 psi crosswise. The tape shall be manufactured with integral wires, foil backing or other means to enable detection by a metal detector when the tape is buried up to 3 feet deep. The tape shall be of a type specifically manufactured for marking and locating underground utilities. The metallic core of the tape shall be encased in a protective jacket or provided with other means to protect it from corrosion. Tape color shall be as specified in TABLE 1 and shall bear a continuous printed inscription describing the specific utility.

TABLE 1. Tape Color

Red:	Electric
Yellow:	Gas, Oil, Dangerous Materials
Orange:	Telephone, Telegraph, Television, Police, and Fire Communications
Blue:	Water Systems
Green:	Sewer Systems

2.3 TRACER WIRE

Tracer wire shall be insulated No. 12 AWG solid copper and of a type specifically manufactured for locating underground utilities. Insulation shall be solid yellow in color. Tracer wire shall be subject to approval by the Contracting Officer.

PART 3 EXECUTION

3.1 EXCAVATION

Excavation of every description, regardless of material encountered, shall be performed to the lines and grades indicated. During excavation, material satisfactory for backfilling shall be stockpiled in an orderly manner at a distance from the banks of the trench equal to 1/2 the depth of the excavation, but in no instance closer than 2 feet. Excavated material not required or not satisfactory for backfill shall be disposed of as specified in Section 02300 EARTHWORK. Grading shall be done as may be necessary to prevent surface water from flowing into the excavation, and any water accumulating shall be removed to maintain the stability of the bottom and sides of the excavation. Unauthorized overexcavation shall be backfilled in accordance with paragraph BACKFILLING AND COMPACTION at no additional cost to the Government.

3.1.1 Trench Excavation Requirements

The trench shall be excavated as recommended by the manufacturer of the pipe to be installed. Trench walls below the top of the pipe shall be sloped, or made vertical, and of such width as recommended in the manufacturer's installation manual. Where no manufacturer's installation manual is available, trench walls shall be made vertical, except that trench construction shall be in accordance with OHSA. Trench walls which are cut back shall be excavated to at least the angle of repose of the soil. Special attention shall be given to slopes which may be adversely affected by weather or moisture content. The trench width below the top of pipe shall not exceed 24 inches plus pipe outside diameter (O.D.) for pipes of less than 24 inches inside diameter and shall not exceed 36 inches plus pipe outside diameter for sizes larger than 24 inches inside diameter. Where recommended trench widths are exceeded, redesign, stronger pipe, or special installation procedures shall be utilized by the Contractor. The cost of redesign, stronger pipe, or special installation procedures shall be borne by the Contractor without any additional cost to the Government.

3.1.1.1 Bottom Preparation

The bottoms of trenches shall be accurately graded to provide uniform bearing and support for the bottom quadrant of each section of the pipe. Bell holes shall be excavated to the necessary size at each joint or coupling to eliminate point bearing. Stones of 3 inches or greater in any dimension, or as recommended by the pipe manufacturer, whichever is smaller, shall be removed to avoid point bearing.

3.1.1.2 Removal of Unyielding Material

Where unyielding material is encountered in the bottom of the trench, such material shall be removed 4 inches below the requiried grade and replaced with suitable materials as provided in paragraph BACKFILLING AND COMPACTION.

3.1.1.3 Removal of Unstable Material

Where unstable material is encountered in the bottom of the trench, such material shall be removed to the depth directed and replaced to the proper grade with select granular material as provided in paragraph BACKFILLING AND COMPACTION. When removal of unstable material is required due to the Contractor's fault or neglect in performing the work, the resulting material shall be excavated and replaced by the Contractor without additional cost to the Government.

3.1.1.4 Excavation for Appurtenances

Excavation for manholes, catch-basins, inlets, or similar structures shall be sufficient to leave at least 12 inches clear between the outer structure surfaces and the face of the excavation or support members and of sufficient size to permit the placement and removal of forms for the full length and width of structure footings and foundations as shown. Removal of unstable material shall be as specified above. When concrete or masonry is to be placed in an excavated area, special care shall be taken not to disturb the bottom of the excavation. Excavation to the final grade level shall not be made until just before the concrete or masonry is to be placed.

3.1.1.5 Jacking, Boring, and Tunneling

Unless otherwise indicated, excavation shall be by open cut except that sections of a trench may be jacked, bored, or tunneled if, in the opinion of the Contracting Officer, the pipe, cable, or duct can be safely and properly installed and backfill can be properly compacted in such sections.

3.1.2 Stockpiles

Stockpiles of satisfactory and unsatisfactory and waste materials shall be placed and graded as specified. Stockpiles shall be kept in a neat and well drained condition, giving due consideration to drainage at all times. The ground surface at stockpile locations shall be cleared, grubbed, and sealed by rubber-tired equipment, excavated satisfactory and unsatisfactory materials shall be separately stockpiled. Stockpiles of satisfactory materials shall be protected from contamination which may destroy the quality and fitness of the stockpiled material. If the Contractor fails to protect the stockpiles, and any material becomes unsatisfactory, such material shall be removed and replaced with satisfactory material from approved sources at no additional cost to the Government. Locations of stockpiles shall be subject to prior approval of the Contracting Officer.

3.2 BACKFILLING AND COMPACTION

Backfill material shall consist of satisfactory material, select granular material, or initial backfill material as required. Backfill shall be placed in layers not exceeding 6 inches loose thickness for compaction by hand operated machine compactors, and 8 inches loose thickness for other than hand operated machines, unless otherwise specified. Each layer shall be compacted to at least 90 percent maximum density, unless otherwise specified.

3.2.1 Trench Backfill

Trenches shall be backfilled to the grade shown. The trench shall be backfilled to 2 feet above the top of pipe prior to performing the required pressure tests. The joints and couplings shall be left uncovered during the pressure test. The trench shall not be backfilled until all specified tests are performed.

3.2.1.1 Replacement of Unyielding Material

Unyielding material removed from the bottom of the trench shall be replaced with select granular material or initial backfill material.

3.2.1.2 Replacement of Unstable Material

Unstable material removed from the bottom of the trench or excavation shall be replaced with select granular material placed in layers not exceeding 6

inches loose thickness.

3.2.1.3 Bedding and Initial Backfill

Bedding shall be of the type and thickness shown. Initial backfill material shall be placed and compacted with approved tampers to a height of at least 1 foot above the utility pipe or conduit. The backfill shall be brought up evenly on both sides of the pipe for the full length of the pipe. Care shall be taken to ensure thorough compaction of the fill under the haunches of the pipe.

3.2.1.4 Final Backfill

The remainder of the trench, except for special materials for roadways, railroads and airfields, shall be filled with satisfactory material. Backfill material shall be placed and compacted as follows:

a. Roadways, Railroads, and Airfields: Backfill shall be placed up to the elevation at which the requirements in Section 02300 EARTHWORK control. Water flooding or jetting methods of compaction will not be permitted.

b. Sidewalks, Turfed or Seeded Areas and Miscellaneous Areas: Backfill shall be deposited in layers of a maximum of 12 inches loose thickness, and compacted to 85 percent maximum density. Compaction by water flooding or jetting will not be permitted. This requirement shall also apply to all other areas not specifically designated above.

3.2.2 Backfill for Appurtenances

After the manhole, catchbasin, inlet, or similar structure has been constructed, backfill shall be placed in such a manner that the structure will not be damaged by the shock of falling earth. The backfill material shall be deposited and compacted as specified for final backfill, and shall be brought up evenly on all sides of the structure to prevent eccentric loading and excessive stress.

3.3 SPECIAL REQUIREMENTS

Special requirements for both excavation and backfill relating to the specific utilities are as follows:

3.3.1 Water Lines

Trenches shall be of a depth to provide a minimum cover of 30 inches in unpaved areas and 36 inches in paved areas from the existing ground surface, or from the indicated finished grade, whichever is lower, to the top of the pipe.

3.3.2 Omitted

3.3.3 Plastic Marking Tape

Warning tapes shall be installed directly above the pipe, at a depth of 18 inches below finished grade unless otherwise shown.

3.3.4 Tracer Wire

In addition to the plastic marking tape, tracer wire shall also be provided for the underground utilities. Tracer wire shall be provided for all pipe lines, including force mains and sprinkler system lines, but excluding storm drain and sanitary sewer lines. Tracer wire shall be provided for all electrical and communication conduits and direct buried cables. Tracer wire shall be installed on the bottom of the trench just to one side of where the pipe, conduit, or cable contacts the trench bottom. The wire shall run continuously between and terminate at valve boxes on water and gas lines, regulator stub-ups on gas lines, sprinkler heads and valve boxes on sprinkler system lines, panel boxes on electrical lines, and other such aboveground appurtenances. Each end of the wire shall have an additional length of at least 2 feet coiled up in the appurtenance.

3.4 TESTING

Testing shall be the responsibility of the Contractor and shall be performed at no additional cost to the Government. Inspections and test results shall be certified by a registered professional civil engineer. These certifications shall state that the tests and observations were performed by or under the direct supervision of the engineer and that the results are representative of the materials or conditions being certified by the tests.

3.4.1 Testing Facilities

Tests shall be performed by an approved commercial testing laboratory. No work requiring testing will be permitted until the facilities have been approved by the Contracting Officer.

3.4.2 Testing of Backfill Materials

Classification of backfill materials shall be determined in accordance with ASTM D 2487 and the moisture-density relations of soils shall be determined in accordance with ASTM D 1557. Grain size of bedding and backfill materials shall be determined in accordance with ASTM C 136 or ASTM D 422 and ASTM D 1140 (wash No. 200, without hydrometer), as appropriate. A minimum of one soil classification and one moisture-density relation test shall be performed on each different type of material used for bedding and backfill.

3.4.3 Field Density Tests

Tests shall be performed in sufficient numbers to ensure that the specified density is being obtained. A minimum of one field density test per lift of backfill for every 100 feet, or fraction thereof, of installation shall be performed. One moisture density relationship shall be determined for every 200 cubic yards of material used. Field in-place density shall be determined in accordance with ASTM D 1556. Copies of field and laboratory tests shall be furnished to the Contracting Officer. When test results indicate, as determined by the Contracting Officer, that compaction is not as specified, the material shall be removed, replaced and recompacted to meet specification requirements. Tests on recompacted areas shall be performed to determine conformance with specification requirements, at no additional cost to the Government.

3.4.3.1 Compaction Control

The tests required on materials prior to placement and the compaction control procedures and methods specified in Section 02315 EXCAVATION,

FILLING, AND BACKFILLING FOR BUILDINGS, Paragraph TESTING (with the exception of paragraph Tests Required During Placement) in regard to compaction control of soils, and utilizing the one-point or two-point compaction methods to relate field density data to laboratory test values, shall fully apply to and be considered a part of this specification section.

3.4.4 Displacement of Sewers

After other required tests have been performed and the trench backfill compacted to the finished grade surface, the pipe shall be inspected to determine whether significant displacement has occurred. This inspection shall be conducted in the presence of the Contracting Officer. Pipe sizes larger than 36 inches shall be entered and examined, while smaller diameter pipe shall be inspected by shining a light or laser between manholes or manhole locations, or by the use of television cameras passed through the pipe. If, in the judgement of the Contracting Officer, the interior of the pipe shows poor alignment or any other defects that would cause improper functioning of the system, the defects shall be remedied as directed at no additional cost to the Government.

-- End of Section --

SECTION TABLE OF CONTENTS

DIVISION 02 - SITE WORK

SECTION 02364

TERMITICIDE TREATMENT MEASURES FOR SUBTERRANEAN TERMITE CONTROL

06/98

PART 1 GENERAL

1.1 SUBMITTALS
1.2 QUALIFICATIONS
1.3 SAFETY REQUIREMENTS
1.4 DELIVERY, STORAGE, AND HANDLING
1.4.1 Delivery
1.4.2 Storage
1.4.3 Handling
1.5 INSPECTION
1.6 WARRANTY

PART 2 PRODUCTS

2.1 TERMITICIDES

PART 3 EXECUTION

3.1 TECHNICAL REPRESENTATIVE
3.2 SITE PREPARATION
3.2.1 Ground Preparation
3.2.2 Verification
3.2.3 Foundation Exterior
3.2.4 Utilities
3.3 SITE CONDITIONS
3.3.1 Soil Moisture
3.3.2 Runoff and Wind Drift
3.3.2.1 Vapor Barriers and Waterproof Membranes
3.3.2.2 Utilities and Vents
3.3.3 Placement of Concrete
3.4 TERMITICIDE TREATMENT
3.4.1 Equipment Calibration and Tank Measurement
3.4.2 Mixing and Application
3.4.3 Treatment Method
3.4.3.1 Surface Application
3.4.3.2 Rodding and Trenching
3.4.4 Sampling
3.5 VERIFICATION OF MEASUREMENT
3.6 CLEAN UP, DISPOSAL, AND PROTECTION
3.6.1 Clean Up
3.6.2 Disposal of Termiticide
3.6.3 Protection of Treated Area
3.7 CONDITIONS FOR SATISFACTORY TREATMENT

3.7.1 Equipment Calibrations and Measurements
3.7.2 Testing
3.7.3 Disturbance of Treated Soils
3.7.4 Termites Found Within the Warranty Period
3.8 RE-TREATMENT

-- End of Section Table of Contents --

CEGS-02364 (June 1998)

SECTION 02364

TERMITICIDE TREATMENT MEASURES FOR SUBTERRANEAN TERMITE CONTROL
06/98

PART 1 GENERAL

1.1 SUBMITTALS

Government approval is required for submittals with a "G" designation; submittals not having a "G" designation are for information only. When used, a designation following the "G" designation identifies the office that will review the submittal for the Government. The following shall be submitted in accordance with Section 01330 SUBMITTAL PROCEDURES:

SD-03 Product Data

Termiticide Application Plan;

Termiticide application plan with proposed sequence of treatment work with dates and times. The termiticide trade name, EPA registration number, chemical composition, formulation, concentration of original and diluted material, application rate of active ingredients, method of application, area/volume treated, amount applied; and the name and state license number of the state certified applicator shall be included.

Termiticides

Manufacturer's label and Material Safety Data Sheet (MSDS) for termiticides proposed for use.

Foundation Exterior

Written verification that other site work will not disturb the treatment.

Utilities and Vents

Written verification that utilities, vents have been located.

Verification of Measurement

Written verification that the volume of termiticide used meets the application rate.

Application Equipment

A listing of equipment to be used.

SD-06 Test Reports

Equipment Calibration and Tank Measurement

Certification of calibration tests conducted on the equipment used in the termiticide application.

Soil Moisture

Soil moisture test result.

SD-07 Certificates

Qualifications

Qualifications and state license number of the termiticide applicator.

1.2 QUALIFICATIONS

The Contractor's principal business shall be pest control. The Contractor shall be licensed and the termiticide applicators certified in the state where the work is to be performed. Termiticide applicators shall also be certified in the U.S. Environmental Protection Agency (EPA) pesticide applicator category which includes structural pest control.

1.3 SAFETY REQUIREMENTS

The Contractor shall formulate, treat, and dispose of termiticides and their containers in accordance with label directions. Use the clothing and personal protective equipment specified on the labeling for use during all phases of the application.

1.4 DELIVERY, STORAGE, AND HANDLING

1.4.1 Delivery

Termiticide material shall be delivered to the site in the original unopened containers bearing legible labels indicating the EPA registration number and manufacturer's registered uses. All other materials to be used on site for the purpose of termite control shall be delivered in new or otherwise good condition as supplied by the manufacturer or formulator.

1.4.2 Storage

Materials shall be stored in designated areas and in accordance with manufacturer's labels. Termiticides and related materials shall be kept under lock and key when unattended.

1.4.3 Handling

Termiticides shall be handled in accordance with manufacturer's labels. Manufacturer's warnings and precautions shall be observed. Materials shall

be handled preventing contamination by dirt, water, and organic material. Protect termiticides from sunlight as recommended by the manufacturer.

1.5 INSPECTION

Termiticides shall be inspected upon arrival at the job site for conformity to type and quality in accordance with paragraph TERMITICIDE. Each label shall bear evidence of registration under the Federal Insecticide, Fungicide, and Rodenticide Act (FIFRA), as amended. Other materials shall be inspected for conformance with specified requirements. Unacceptable materials shall be removed from the job site.

1.6 WARRANTY

The Contractor shall provide a 5 -year written warranty against infestations or reinfestations by subterranean termites of the buildings or building additions constructed under this contract. Warranty shall include annual inspections of the buildings or building additions.

PART 2 PRODUCTS

2.1 TERMITICIDES

Termiticides shall be currently registered by the EPA. Termiticide shall be selected for maximum effectiveness and duration after application. The selected termiticide shall be suitable for the soil and climatic conditions at the project site.

PART 3 EXECUTION

3.1 TECHNICAL REPRESENTATIVE

The certified installation pest management coordinator shall be the technical representative, and shall be present at all meetings concerning treatment measures for subterranean termites. They may be present during treatment application.

3.2 SITE PREPARATION

Site preparation shall be in accordance with Sections 02300 EARTHWORK, and 02315 EXCAVATION, FILLING AND BACKFILLING FOR BUILDINGS. Work related to final grades, landscape plantings, foundations, or any other alterations to finished construction which might alter the condition of treated soils, shall be coordinated with this specification.

3.2.1 Ground Preparation

Food sources shall be eliminated by removing debris from clearing and grubbing and post construction wood scraps such as ground stakes, form boards, and scrap lumber from the site, before termiticide application begins.

3.2.2 Verification

Before work starts, the Contractor shall verify that final grades are as indicated and smooth grading has been completed in accordance with Section 02300 EARTHWORK. Soil particles shall be finely graded with particles no larger than 1 inch and compacted to eliminate soil movement to the greatest degree.

3.2.3 Foundation Exterior

The Contractor shall provide written verification that final grading and landscape planting operations will not disturb treatment of the soil on the exterior sides of foundation walls, grade beams, and similar structures.

3.2.4 Utilities

The Contractor shall provide written verification that the location and identity of HVAC ducts and vents, water and sewer lines, and plumbing have been accomplished prior to the termiticide application.

3.3 SITE CONDITIONS

The following conditions shall determine the time of application.

3.3.1 Soil Moisture

Soils to be treated shall be tested immediately before application. Soil moisture content shall be tested to a minimum depth of 3 inches. The soil moisture shall be as recommended by the termiticide manufacturer. The termiticide will not be applied when soil moisture exceeds manufacturer's recommendations because termiticides do not adhere to the soil particles in saturated soils.

3.3.2 Runoff and Wind Drift

Termiticide shall not be applied during or immediately following heavy rains. Applications shall not be performed when conditions may cause runoff or create an environmental hazard. Applications shall not be performed when average wind speed exceeds 10 miles per hour. The termiticide shall not be allowed to enter water systems, aquifers, or endanger humans or animals.

3.3.2.1 Vapor Barriers and Waterproof Membranes

Termiticide shall be applied prior to placement of a vapor barrier or waterproof membrane.

3.3.2.2 Utilities and Vents

Prior to application, HVAC ducts and vents located in treatment area shall be turned off and blocked to protect people and animals from termiticide.

3.3.3 Placement of Concrete

Concrete covering treated soils shall be placed as soon as the termiticide has reached maximum penetration into the soil. Time for maximum

penetration shall be as recommended by the manufacturer.

3.4 TERMITICIDE TREATMENT

3.4.1 Equipment Calibration and Tank Measurement

Immediately prior to commencement of termiticide application, calibration tests shall be conducted on the application equipment to be used and the application tank shall be measured to determine the volume and contents. These tests shall confirm that the application equipment is operating within the manufacturer's specifications and will meet the specified requirements. The Contractor shall provide written certification of the equipment calibration test results within 1 week of testing.

3.4.2 Mixing and Application

Formulating, mixing, and application shall be performed in the presence of the Contracting Officer or the technical representative. A closed system is recommended as it prevents the termiticide from coming into contact with the applicator or other persons. Water for formulating shall only come from designated locations. Filling hoses shall be fitted with a backflow preventer meeting local plumbing codes or standards. Overflow shall be prevented during the filling operation. Prior to each day of use, the equipment used for applying termiticides shall be inspected for leaks, clogging, wear, or damage. Any repairs are to be performed immediately.

3.4.3 Treatment Method

For areas to be treated, the Contractor shall establish complete and unbroken vertical and/or horizontal soil poison barriers between the soil and all portions of the intended structure which may allow termite access to wood and wood related products.

3.4.3.1 Surface Application

Surface application shall be used for establishing horizontal barriers. Surface applicants shall be applied as a coarse spray and provide uniform distribution over the soil surface. Termiticide shall penetrate a minimum of 1 inch into the soil, or as recommended by the manufacturer.

3.4.3.2 Rodding and Trenching

Rodding and trenching shall be used for establishing vertical soil barriers. Trenching shall be to the depth of the foundation footing. Width of trench shall be as recommended by the manufacturer, or as indicated. Rodding or other approved method may be implemented for saturating the base of the trench with termiticide. Immediately after termiticide has reached maximum penetration as recommended by the manufacturer, backfilling of the trench shall commence. Backfilling shall be in 6 inch rises or layers. Each rise shall be treated with termiticide.

3.4.4 Sampling

The Contracting Officer may draw from stocks at the job site, at any time

and without prior notice, samples of the termiticides used to determine if the amount of active ingredient specified on the label is being applied.

3.5 VERIFICATION OF MEASUREMENT

Once termiticide application has been completed, tank contents shall be measured to determine the remaining volume. The total volume measurement of used contents for the application shall equal the established application rate for the project site conditions. The Contractor shall provide written verification of the measurements.

3.6 CLEAN UP, DISPOSAL, AND PROTECTION

Once application has been completed, the Contractor shall proceed with clean up and protection of the site without delay.

3.6.1 Clean Up

The site shall be cleaned of all material associated with the treatment measures, according to label instructions, and as indicated. Excess and waste material shall be removed and disposed off site.

3.6.2 Disposal of Termiticide

The Contractor shall dispose of residual termiticides and containers off Government property, and in accordance with label instructions and EPA criteria.

3.6.3 Protection of Treated Area

Immediately after the application, the area shall be protected from other use by erecting barricades and providing signage as required or directed.

3.7 CONDITIONS FOR SATISFACTORY TREATMENT

3.7.1 Equipment Calibrations and Measurements

Where results from the equipment calibration and tank measurements tests are unsatisfactory, re-treatment will be required.

3.7.2 Testing

Should an analysis, performed by a third party, indicate that the samples of the applied termiticide contain less than the amount of active ingredient specified on the label, and/or if soils are treated to a depth less than specified or approved, re-treatment will be required.

3.7.3 Disturbance of Treated Soils

Soil and fill material disturbed after treatment shall be re-treated before placement of slabs or other covering structures.

3.7.4 Termites Found Within the Warranty Period

If live subterranean termite infestation or termite damage is discovered during the warranty period, the Contractor shall re-treat the site.

3.8 RE-TREATMENT

Where re-treatment is required, the Contractor shall:

a. Re-treat the soil and/or perform other treatment as necessary for prevention or elimination of subterranean termite infestation.

b. Repair damage caused by termite infestation.

-- End of Section --

SECTION TABLE OF CONTENTS

DIVISION 02 - SITE WORK

SECTION 02374

GEOSYNTHETIC DRAINAGE LAYER

12/99

PART 1 GENERAL

1.1 REFERENCES
1.2 OMITTED
1.3 SUBMITTALS
1.4 OMITTED
1.5 DELIVERY, STORAGE AND HANDLING
1.6 CONTRACTOR OPTION

PART 2 PRODUCTS

2.1 GEOSYNTHETIC DRAINAGE LAYER
2.2 GEOTEXTILE PROPERTIES
2.3 SAMPLING AND TESTING
2.3.1 Manufacturing Quality Control Testing

PART 3 EXECUTION

3.1 INSTALLATION
3.1.1 Surface Preparation
3.1.2 Placement
3.1.3 Seams and Overlaps
3.1.3.1 Geonet Side Seams
3.1.3.2 Geonet End Seams
3.1.3.3 Geonet Fasteners
3.1.3.4 Geotextile Seams
3.1.3.5 Geocomposite Edges
3.1.4 Stacked Geosynthetic Drainage Layers
3.1.5 Corners
3.1.6 Penetrations
3.2 REPAIRS
3.2.1 Geonet Damage
3.2.2 Geotextile Damage
3.3 PROTECTION AND BACKFILLING

-- End of Section Table of Contents --

CEGS-02374 (December 1999)

SECTION 02374

GEOSYNTHETIC DRAINAGE LAYER
12/99

PART 1 GENERAL

1.1 REFERENCES

The publications listed below form a part of the specification to the extent referenced. The publications are referred to in the text by basic designation only.

AMERICAN SOCIETY FOR TESTING AND MATERIALS (ASTM)

ASTM D 413	(1982; R 1998) Rubber Property - Adhesion to Flexible Substrate
ASTM D 1505	(1998) Density of Plastics by the Density-Gradient Technique
ASTM D 4218	(1996) Test Method for Determination of Carbon Black Content in Polyethylene Compounds by the Muffle-Furnace Technique
ASTM D 4491	(1999) Water Permeability of Geotextiles by Permittivity
ASTM D 4632	(1991; R 1996) Grab Breaking Load and Elongation of Geotextiles
ASTM D 4716	(1995) Determining the (In-Plane) Flow Rate Per Unit Width and Hydraulic Transmissivity of a Geosynthetic using a Constant Head
ASTM D 4751	(1999) Apparent Opening Size of Geotextiles
ASTM D 5199	(1998) Nominal Thickness of Geotextiles and Geomembranes
ASTM D 5261	(1992; R 1996) Measuring Mass per Unit Area of Geotextiles
ASTM D 5596	(1994) Microscopic Evaluation of the Dispersion of Carbon Black in Polyolefin Geosynthetics

1.2 OMITTED

1.3 SUBMITTALS

Government approval is required for submittals with a "G" designation; submittals not having a "G" designation are for information only. When used, a designation following the "G" designation identifies the office that will review the submittal for the Government. The following shall be submitted in accordance with Section 01330 SUBMITTAL PROCEDURES:

SD-03 Product Data

Sampling and Testing

Manufacturer's quality control manual.

Seams and Overlaps

End seam details.

Penetrations

Penetration details.

SD-04 Samples

Geosynthetic Drainage Layer

One properly identified 24 by 24 inch minimum size geosynthetic drainage layer sample with any attached geotextiles. The fasteners proposed for use shall also be submitted.

SD-06 Test Reports

Geosynthetic Drainage Layer

Manufacturer's quality control test results. Test results not meeting the requirements in Table 1 will result in rejection of applicable rolls.

1.4 OMITTED

1.5 DELIVERY, STORAGE AND HANDLING

Geosynthetic drainage layer material shall not be damaged during shipping, storage, or handling. Any drainage layer material found to be damaged shall be repaired or replaced. Material shall be delivered only after the required submittals have been approved. Each roll shall be labelled with the Manufacturer's name, product identification, lot number, roll number, and roll dimensions. Rolls that have attached geotextiles shall be individually wrapped in plastic.

1.6 CONTRACTOR OPTION

The Contractor may, at his option and with notice to the Contracting Officer, use material special under this Section in place of the filter sand layer shown on the drawings and specified in Section 02315 EXCAVATION, FILLING, AND BACKFILLING FOR BUILDINGS.

PART 2 PRODUCTS

2.1 GEOSYNTHETIC DRAINAGE LAYER

The polymer used to manufacture the geonet component of the geosynthetic drainage layer shall be polyethylene which is clean and free of any foreign contaminants. Regrind material which consists of edge trimmings and other scraps may be used to manufacture the geonet; however, post-consumer recycled materials shall not be used. The geosynthetic drainage layer shall conform to the property requirements listed in Table 1 and shall be free of defects.

2.2 GEOTEXTILE PROPERTIES

The geonet shall be covered on top with nonwoven geotextile. Geocomposite shall be created by heat bonding geotextile to the geonet. Geotextile attached to the geocomposite shall meet the requirements listed in Table 1. Where applicable, Table 1 property values represent minimum average roll values (MARV) in the weakest principal direction. The value for AOS represents the maximum average roll value.

TABLE 1 - GEOSYNTHETIC DRAINAGE LAYER PROPERTIES

PROPERTY	TEST METHOD	TEST VALUE	MINIMUM TESTING FREQUENCY
GEONET			
Thickness, minimum average	ASTM D 5199	200 mil	15,000 lbs
Thickness, lowest individual	ASTM D 5199	-10 percent	15,000 lbs
Polymer Density, minimum	ASTM D 1505	0.940 g/cc	200,000 lbs
Carbon Black Content	ASTM D 4218	2-3 percent	15,000 lbs
Carbon Black Dispersion	ASTM D 5596	Note 1	45,000 lbs
GEOTEXTILE			
Mass/Unit Area, minimum	ASTM D 5261	6.0 oz/sq yds	20,000 sq yds
Grab Strength, minimum	ASTM D 4632	160 lbs	20,000 sq yds
Permittivity, minimum	ASTM D 4491	1.0/sec	100,000 sq yds
AOS(O95), maximum	ASTM D 4751	.21 mm	100,000 sq yds

TABLE 1 - GEOSYNTHETIC DRAINAGE LAYER PROPERTIES

PROPERTY	TEST METHOD	TEST VALUE	MINIMUM TESTING FREQUENCY
GEOCOMPOSITE			
Transmissivity, minimum, including attached geotextiles Note 2	ASTM D 4716	7 gal/min-foot	100,000 sq yds
Geonet/Geotextile Adhesion Note 3	ASTM D 413	1.0 lbs/inch	100,000 sq yds

Note 1: Carbon black dispersion for 10 different views:
8 of 10 in Category 1 or 2; and
All 10 in Category 1, 2, or 3.

Note 2: Manufacturing quality control transmissivity tests shall be measured using water at 20 degrees C with a gradient of 1.0 under a normal pressure of 1.4 psi. A minimum seating period of 15 minutes shall be used.

Note 3: Average of five equally spaced tests across the roll width.

2.3 SAMPLING AND TESTING

2.3.1 Manufacturing Quality Control Testing

Manufacturing quality control test methods and frequencies shall be in accordance with Table 1 unless otherwise approved.

PART 3 EXECUTION

3.1 INSTALLATION3.1.1 Surface Preparation

Prior to placement of the geosynthetic drainage layer, the subgrade shall be cleaned of all materials which could damage the drainage layer.

3.1.2 Placement

The geosynthetic drainage layer shall not be damaged during placement. Faulty or damaged material shall be replaced or repaired as specified in paragraph REPAIRS. The drainage layer shall be unrolled in the direction of maximum slope, keeping the net flat against the subgrade to minimize wrinkles and folds. The drainage layer shall not be dragged across textured geomembrane if a geotextile is attached to the surface facing the geomembrane. Adequate ballast (e.g. sandbags) shall be placed to prevent uplift by wind prior to covering.

3.1.3 Seams and Overlaps

3.1.3.1 Geonet Side Seams

Geonet side seams shall be overlapped a minimum of 4 inches. Side seam fastener spacing shall be a maximum of 5 feet.

3.1.3.2 Geonet End Seams

Geonet end seams shall be overlapped a minimum of 1 foot. End seam fastener spacing shall be a maximum of 6 inches. The overlaps shall be in the direction of flow. Geonet to geonet contact shall be required at geocomposite end seam connections. End seams shall not be allowed on side slopes steeper than 4 horizontal on 1 vertical.

3.1.3.3 Geonet Fasteners

Geonet rolls shall be tied together with plastic fasteners. The fasteners shall be a contrasting color from the geonet and attached geotextiles. Metallic fasteners will not be allowed.

3.1.3.4 Geotextile Seams

The geotextile component of the geocomposite shall be overlapped in the direction of flow. Holes placed in geotextile to allow seaming of geonet rolls shall be covered by placing geotextile cap strips. Cap strips shall be a minimum of 2 feet in width and shall be thermally bonded to the geotextile component of the geocomposite.

3.1.3.5 Geocomposite Edges

Cap strips shall be placed over any exposed edges of geocomposite. Cap strips shall be as described in paragraph: Geotextile Seams.

3.1.4 Stacked Geosynthetic Drainage Layers

When geosynthetic drainage layers are to be stacked, roll ends and edges shall be staggered so that joints do not lie above one another. Stacked layers shall be laid in the same direction and in a manner that prevents interlocking.

3.1.5 Corners

In the corners of side slopes, an extra layer of drainage layer material shall be installed from the top to the bottom of the slope.

3.1.6 Penetrations

A geotextile apron shall be attached to penetrations so that soil is prevented from getting into the drainage layer. The apron of the attached geotextile shall extend out from the penetration a minimum of 2 feet. The apron geotextile shall be thermally bonded to the geotextile component of the geocomposite.

3.2 REPAIRS

3.2.1 Geonet Damage

Repairs shall be made by placing a patch of the geosynthetic drainage layer over the damaged area. The patch shall extend a minimum of 2 feet beyond the edge of the damage. Approved fasteners, spaced every 6 inches around the patch, shall be used to hold the patch in place. If more than 25 percent of the roll width is damaged, approval must be obtained to repair or replace the damaged roll.

3.2.2 Geotextile Damage

Damaged geotextile shall be repaired by placing a patch of geotextile over the damaged area with a minimum of 12 inches of overlap in all directions. The geotextile patch shall be thermally bonded in place.

3.3 PROTECTION AND BACKFILLING

The geosynthetic drainage layer shall be covered with the specified materials within 14 days of acceptance. Cover soil shall be placed from the bottom of the slope upward and shall not be dropped directly onto the drainage layer from a height greater than 3 feet. The cover soil shall be pushed out over the geosynthetic drainage layer in an upward tumbling motion so that wrinkles in the drainage layer do not fold over. No equipment shall be operated on the top surface of the geosynthetic drainage layer without permission from the Contracting Officer. The initial loose soil lift thickness shall be 12 inches. Equipment with ground pressures no greater than 7 psi shall be used to place the first lift of soil. A minimum of 18 inches of soil shall be maintained between construction equipment with a ground pressure greater than 7 psi and the drainage layer. Cover soil compaction and testing requirements are described in Section 02300 EARTHWORK and 02315 EXCAVATION, FILLING, AND BACKFILLING FOR BUILDINGS.

-- End of Section --

SECTION TABLE OF CONTENTS

DIVISION 02 - SITE WORK

SECTION 02510

WATER DISTRIBUTION SYSTEM

04/98

PART 1 GENERAL

1.1 REFERENCES
1.2 PIPING
1.2.1 Service Lines
1.2.2 Distribution Lines 80 mm (3 Inches) or Larger
1.2.3 Supply Lines 80 mm (3 Inches) or Larger
1.2.4 Sprinkler Supply Lines
1.2.5 Potable Water Lines
1.2.6 Plastic Piping System
1.2.7 Excavation, Trenching, and Backfilling
1.3 OMITTED
1.4 MANUFACTURER'S REPRESENTATIVE
1.5 SUBMITTALS
1.6 HANDLING
1.6.1 Coated and Wrapped Steel Pipe
1.6.2 Polyethylene (PE) Pipe Fittings and Accessories
1.6.3 Miscellaneous Plastic Pipe and Fittings

PART 2 PRODUCTS

2.1 PIPE
2.1.1 Reinforced and Prestressed Concrete Pipe
2.1.2 Plastic Pipe
2.1.2.1 PE Plastic Pipe
2.1.2.2 PVC Plastic Pipe
2.1.2.3 Oriented Polyvinyl Chloride (PVCO) Plastic Pipe
2.1.3 Reinforced Plastic Mortar Pressure (RPMP) Pipe
2.1.4 Reinforced Thermosetting Resin Pipe (RTRP)
2.1.4.1 RTRP-I
2.1.4.2 RTRP-II
2.1.5 Ductile-Iron Pipe
2.1.6 Omitted
2.1.7 Copper Tubing
2.2 FITTINGS AND SPECIALS
2.2.1 Reinforced Concrete Pipe System
2.2.2 PVC Pipe System
2.2.3 RTRP and RPMP Pipe
2.2.4 Ductile-Iron Pipe System
2.2.5 Omitted
2.2.6 Copper Tubing System
2.3 JOINTS
2.3.1 Gaskets for Reinforced Concrete Pipe

2.3.2 Plastic Pipe Jointing
2.3.2.1 PE Pipe
2.3.2.2 PVC Pipe
2.3.2.3 PVCO Pipe
2.3.3 RPMP Pipe
2.3.4 RTRP Pipe
2.3.4.1 RTRP-I, Grade 1 and 2
2.3.4.2 RTRP-II, Grade 1 and 2
2.3.5 Ductile-Iron Pipe Jointing
2.3.6 Steel Pipe Jointing
2.3.6.1 Steel Pipe, Not Galvanized
2.3.6.2 Mechanical Couplings
2.3.7 Omitted
2.3.8 Isolation Joints
2.3.9 Copper Tubing Jointing
2.4 VALVES
2.4.1 Check Valves
2.4.2 Gate Valves
2.4.3 Rubber-Seated Butterfly Valves
2.4.4 Omitted
2.4.5 Omitted
2.4.6 Indicator Post for Valves
2.5 VALVE BOXES
2.6 VALVE PITS
2.7 FIRE HYDRANTS
2.8 OMITTED
2.9 MISCELLANEOUS ITEMS
2.9.1 Service Clamps
2.9.2 Corporation Stops
2.9.3 Goosenecks
2.9.4 Service Stops
2.9.5 Tapping Sleeves
2.9.6 Service Boxes
2.9.7 Disinfection
2.9.8 Meters
2.9.9 Meter Boxes

PART 3 EXECUTION

3.1 INSTALLATION
3.1.1 Cutting of Pipe
3.1.2 Adjacent Facilities
3.1.2.1 Sewer Lines
3.1.2.2 Water Lines
3.1.2.3 Copper Tubing Lines
3.1.2.4 Nonferrous Metallic Pipe
3.1.3 Joint Deflection
3.1.3.1 Allowable for Reinforced Concrete Pipe
3.1.3.2 Offset for Flexible Plastic Pipe
3.1.3.3 Allowable for Ductile-Iron Pipe
3.1.3.4 Allowable for Steel Pipe
3.1.3.5 Allowable for RPMP Pipe
3.1.4 Placing and Laying
3.1.4.1 Reinforced Concrete Pipe Installation

3.1.4.2 Plastic Pipe Installation
3.1.4.3 Piping Connections
3.1.4.4 Penetrations
3.1.4.5 Flanged Pipe
3.1.5 Jointing
3.1.5.1 Reinforced Concrete Pipe Requirements
3.1.5.2 PE Pipe Requirements
3.1.5.3 PVC Plastic Pipe Requirements
3.1.5.4 RTRP I, RTRP II and RPMP Pipe
3.1.5.5 Ductile-Iron Pipe Requirements
3.1.5.6 Not Galvanized Steel Pipe Requirements
3.1.5.7 Galvanized Steel Pipe Requirements
3.1.5.8 Copper Tubing Requirements
3.1.5.9 Bonded Joints Requirements
3.1.5.10 Isolation Joints and Dielectric Fittings
3.1.5.11 Transition Fittings
3.1.6 Installation of Service Lines
3.1.6.1 Service Lines (2 Inches) and Smaller
3.1.6.2 Service Lines Larger than 2 Inches
3.1.6.3 Service Lines for Sprinkler Supplies
3.1.7 Omitted
3.1.8 Setting of Fire Hydrants, Meters, Valves and Valve Boxes
3.1.8.1 Location of Fire Hydrants
3.1.8.2 Location of Meters
3.1.8.3 Location of Valves
3.1.8.4 Location of Service Boxes
3.1.9 Tapped Tees and Crosses
3.1.10 Thrust Restraint
3.1.10.1 Thrust Blocks
3.1.10.2 Restrained Joints
3.2 HYDROSTATIC TESTS
3.2.1 Pressure Test
3.2.2 Leakage Test
3.2.3 Time for Making Test
3.2.4 Concurrent Hydrostatic Tests
3.3 BACTERIALDISINFECTION
3.3.1 Bacteriological Disinfection
3.4 CLEANUP

-- End of Section Table of Contents --

CEGS-02510 (April 1998)

Includes changes through Notice 4 (July 2000)

SECTION 02510

WATER DISTRIBUTION SYSTEM
04/98

PART 1 GENERAL

1.1 REFERENCES

The publications listed below form a part of this specification to the extent referenced. The publications are referred to in the text by basic designation only.

AMERICAN SOCIETY FOR TESTING AND MATERIALS (ASTM)

ASTM B 88	(1996) Seamless Copper Water Tube (Metric)
ASTM D 1599	(1999) Resistance to Short-Time Hydraulic Failure Pressure of Plastic Pipe, Tubing, and Fittings
ASTM D 1784	(1999a) Rigid Poly(Vinyl Chloride) (PVC) Compounds and Chlorinated Poly(Vinyl Chloride) (CPVC) Compounds
ASTM D 1785	(1999) Poly(Vinyl Chloride) (PVC) Plastic Pipe, Schedules 40, 80, and 120
ASTM D 2241	(1996b) Poly(Vinyl Chloride) (PVC) Pressure-Rated Pipe (SDR Series)
ASTM D 2464	(1999) Threaded Poly(Vinyl Chloride) (PVC) Plastic Pipe Fittings, Schedule 80
ASTM D 2466	(1999) Poly(Vinyl Chloride) (PVC) Plastic Pipe Fittings, Schedule 40
ASTM D 2467	(1999) Poly(Vinyl Chloride) (PVC) Plastic Pipe Fittings, Schedule 80
ASTM D 2564	(1996a) Solvent Cements for Poly(Vinyl Chloride) (PVC) Plastic Piping Systems
ASTM D 2657	(1997) Heat Fusion Joining Polyolefin Pipe and Fittings

ASTM D 2774	(1994) Underground Installation of Thermoplastic Pressure Piping
ASTM D 2855	(1996) Making Solvent-Cemented Joints with Poly(Vinyl Chloride) (PVC) Pipe and Fittings
ASTM D 2996	(1995) Filament-Wound "Fiberglass" (Glass-Fiber-Reinforced Thermosetting-Resin) Pipe
ASTM D 2997	(1995) Centrifugally Cast "Fiberglass" (Glass-Fiber-Reinforced Thermosetting-Resin) Pipe
ASTM D 3139	(1998) Joints for Plastic Pressure Pipes Using Flexible Elastomeric Seals
ASTM D 3839	(1994a) Underground Installation of "Fiberglass" (Glass-Fiber-Reinforced Thermosetting Resin) Pipe
ASTM D 4161	(1996) "Fiberglass"(Glass-Fiber-Reinforced Thermosetting Resin) Pipe Joints Using Elastomeric Seals
ASTM F 477	(1999) Elastomeric Seals (Gaskets) for Joining Plastic Pipe
ASTM F 1483	(1998) Oriented Poly(Vinyl Chloride), PVCO, Pressure Pipe

ASME INTERNATIONAL (ASME)

ASME B1.20.1	(1983; R 1992) Pipe Threads, General Purpose (Inch)
ASME B16.1	(1998) Cast Iron Pipe Flanges and Flanged Fittings
ASME B16.26	(1988) Cast Copper Alloy Fittings for Flared Copper Tubes

AMERICAN WATER WORKS ASSOCIATION (AWWA)

AWWA B300	(1992) Hypochlorites
AWWA B301	(1992) Liquid Chlorine
AWWA C104	(1995) Cement-Mortar Lining for Ductile-Iron Pipe and Fittings for Water
AWWA C105	(1993) Polyethylene Encasement for Ductile-Iron Pipe Systems

AWWA C110	(1993) Ductile-Iron and Gray-Iron Fittings, 3 In. Through 48 In. (75 mm through 1200 mm), for Water and Other Liquids
AWWA C111	(1995) Rubber-Gasket Joints for Ductile-Iron Pressure Pipe and Fittings
AWWA C115	(1996) Flanged Ductile-Iron Pipe With Ductile-Iron or Gray-Iron Threaded Flanges
AWWA C151	(1996) Ductile-Iron Pipe, Centrifugally Cast, for Water or Other Liquids
AWWA C153	(1994; Errata Nov 1996) Ductile-Iron Compact Fittings, 3 In. Through 24 In. (76 mm through 610 mm) and 54 In. through 64 In. (1,400 mm through 1,600 mm) for Water Service
AWWA C200	(1997) Steel Water Pipe - 6 In. (150 mm) and Larger
AWWA C203	(1997) Coal-Tar Protective Coatings and Linings for Steel Water Pipelines - Enamel and Tape - Hot-Applied
AWWA C207	(1994) Steel Pipe Flanges for Waterworks Service - Sizes 4 In. Through 144 In. (100 mm through 3,600 mm)
AWWA C300	(1997) Reinforced Concrete Pressure Pipe, Steel-Cylinder Type, for Water and Other Liquids
AWWA C301	(1992) Prestressed Concrete Pressure Pipe, Steel-Cylinder Type, for Water and Other Liquids
AWWA C303	(1995) Concrete Pressure Pipe, Bar-Wrapped, Steel Cylinder Type
AWWA C500	(1993; C500a) Metal-Sealed Gate Valves for Water Supply Service
AWWA C502	(1994; C502a) Dry-Barrel Fire Hydrants
AWWA C504	(1994) Rubber-Seated Butterfly Valves
AWWA C509	(1994; Addendum 1995) Resilient-Seated Gate Valves for Water Supply Service
AWWA C600	(1993) Installation of Ductile-Iron Water

	Mains and Their Appurtenances
AWWA C606	(1997) Grooved and Shouldered Joints
AWWA C651	(1992) Disinfecting Water Mains
AWWA C800	(1989) Underground Service Line Valves and Fittings
AWWA C900	(1997; C900a) Polyvinyl Chloride (PVC) Pressure Pipe, 4 In. Through 12 In., for Water Distribution
AWWA C901	(1996) Polyethylene (PE) Pressure Pipe and Tubing, 1/2 In. Through 3 In., for Water Service
AWWA C905	(1997) Polyvinyl Chloride (PVC) Water Transmission Pipe, Nominal Diameters 14 In. Through 36 In.
AWWA C909	(1998) Molecularly Oriented Polyvinyl Chloride (PVCO) Pressure Pipe, 4 IN through 12 IN (100 mm through 300 mm), for Water Distribution
AWWA C950	(1995) Fiberglass Pressure Pipe
AWWA M23	(1980) Manual: PVC Pipe - Design and Installation

ASBESTOS CEMENT PIPE PRODUCERS ASSOCIATION (ACPPA)

ACPPA Work Practices	(1988) Recommended Work Practices for A/C Pipe

DUCTILE IRON PIPE RESEARCH ASSOCIATION (DIPRA)

DIPRA-Restraint Design	(1997) Thrust Restraint Design for Ductile Iron Pipe

MANUFACTURERS STANDARDIZATION SOCIETY OF THE VALVE AND FITTINGS INDUSTRY (MSS)

MSS SP-80	(1997) Bronze Gate, Globe, Angle and Check Valves

NATIONAL FIRE PROTECTION ASSOCIATION (NFPA)

NFPA 24	(1995) Installation of Private Fire Service Mains and Their Appurtenances
NFPA 49	(1994) Hazardous Chemicals Data

NFPA 325-1	(1994) Fire Hazard Properties of Flammable Liquids, Gases, and Volatile Solids
NFPA 704	(1996) Identification of the Fire Hazards of Materials for Emergency Response

NSF INTERNATIONAL (NSF)

NSF 14	(1998) Plastics Piping Components and Related Materials
NSF 61	(1999) Drinking Water System Components - Health Effects (Sections 1-9)

THE SOCIETY FOR PROTECTIVE COATINGS (SSPC)

SSPC Paint 21	(1991) White or Colored Silicone Alkyd Paint
SSPC Paint 25	(1991) Red Iron Oxide, Zinc Oxide, Raw Linseed Oil and Alkyd Primer (Without Lead and Chromate Pigments)

1.2 PIPING

This section covers water distribution service lines, and connections to building service at a point approximately 5 feet outside buildings and structures to which service is required. The Contractor shall have a copy of the manufacturer's recommendations for each material or procedure to be utilized available at the construction site at all times.

1.2.1 Service Lines

Piping for water service lines less than 3 inchesin diameter shall be galvanized steel, polyvinyl chloride (PVC) plastic, Oriented PVC plastic polyethylene, or copper tubing, unless otherwise shown or specified. Piping for water service lines 3 inchesand larger shall be ductile iron, polyvinyl chloride (PVC) plastic, filament-wound or centrifugally cast reinforced thermosetting resin, reinforced plastic mortar pressure pipe or steel, unless otherwise shown or specified.

1.2.2 Distribution Lines 80 mm (3 Inches) or Larger

Piping for water distribution lines 3 inches or larger shall be ductile iron, polyvinyl chloride (PVC) through 36 inch nominal diameter plastic, Oriented PVC plastic filament-wound or centrifugally cast reinforced thermosetting resin, reinforced plastic mortar pressure pipe, or reinforced concrete, unless otherwise shown or specified.

1.2.3 Supply Lines 80 mm (3 Inches) or Larger

Piping for water supply lines 3 inches or larger shall be ductile iron, polyvinyl chloride (PVC) plastic, through 36 inch nominal diameter, Oriented PVC plastic filament-wound reinforced or centrifugally cast

reinforced thermosetting resin, reinforced plastic mortar pressure pipe, steel, or reinforced concrete, unless otherwise shown or specified.

1.2.4 Sprinkler Supply Lines

Piping for water lines supplying sprinkler systems for building fire protection shall conform to NFPA 24 from the point of connection with the water distribution system to the building 5 foot line.

1.2.5 Potable Water Lines

Piping and components of potable water systems which come in contact with the potable water shall conform to NSF 61.

1.2.6 Plastic Piping System

Plastic piping system components (PVC, polyethylene, thermosetting resin and reinforced plastic mortar pressure) intended for transportation of potable water shall comply with NSF 14 and be legibly marked with their symbol.

1.2.7 Excavation, Trenching, and Backfilling

Excavation, trenching, and backfilling shall be in accordance with the applicable provisions of Section 02316 EXCAVATION, TRENCHING, AND BACKFILLING FOR UTILITIES SYSTEMS, except as modified herein.

1.3 OMITTED

1.4 MANUFACTURER'S REPRESENTATIVE

The Contractor shall have a manufacturer's field representative present at the jobsite during the installation and testing of PE, RTRP, and/or RPMP pipe to provide technical assistance and to verify that the materials are being installed in accordance with the manufacturer's prescribed procedures. When the representative feels that the Contractor is installing and testing the PE, RTRP, and/or RPMP pipe in a satisfactory manner, certification shall be written to note which individuals employed by the Contractor are capable of properly installing the pipe. The field representative shall advise the Contractor of unsatisfactory conditions immediately when they occur. Such conditions include improper diameter of pipe ends, damaged interior liner, poorly prepared joints, improper curing of joints, moving pipe before joints are cured, bending pipe to follow abrupt changes in trench contours, leaving pipe ends open in trench overnight, not properly drying joints after rain storms, exceeding effective adhesive life, sharp objects in trench bed, backfill that could damage pipe, improper procedure for concrete encasement of pipe, omission of thrust blocks at changes in direction or any other condition which could have an adverse effect on the satisfactory completion and operation of the piping system.

1.5 SUBMITTALS

Government approval is required for submittals with a "G" designation;

submittals not having a "G" designation are for information only. When used, a designation following the "G" designation identifies the office that will review the submittal for the Government. The following shall be submitted in accordance with Section 01330 SUBMITTAL PROCEDURES:

SD-03 Product Data

Installation.

The manufacturer's recommendations for each material or procedure to be utilized.

Waste Water Disposal Method.

The method proposed for disposal of waste water from hydrostatic tests and disinfection, prior to performing hydrostatic tests.

Satisfactory Installation.

A statement signed by the principal officer of the contracting firm stating that the installation is satisfactory and in accordance with the contract drawings and specifications, and the manufacturer's prescribed procedures and techniques, upon completion of the project and before final acceptance.

SD-06 Test Reports

Bacteriological Disinfection.

Test results from commercial laboratory verifying disinfection.

SD-07 Certificates

Manufacturer's Representative.

The name and qualifications of the manufacturer's representative and written certification from the manufacturer that the representative is technically qualified in all phases of PE, RTRP, and/or RPMP pipe laying and jointing and experienced to supervise the work and train the Contractor's field installers, prior to commencing installation.

Installation.

A statement signed by the manufacturer's field representative certifying that the Contractor's personnel are capable of properly installing the pipe on the project.

1.6 HANDLING

Pipe and accessories shall be handled to ensure delivery to the trench in sound, undamaged condition, including no injury to the pipe coating or lining. If the coating or lining of any pipe or fitting is damaged, the repair shall be made by the Contractor in a satisfactory manner, at no

additional cost to the Government. No other pipe or material shall be placed inside a pipe or fitting after the coating has been applied. Pipe shall be carried into position and not dragged. Use of pinch bars and tongs for aligning or turning pipe will be permitted only on the bare ends of the pipe. The interior of pipe and accessories shall be thoroughly cleaned of foreign matter before being lowered into the trench and shall be kept clean during laying operations by plugging or other approved method. Before installation, the pipe shall be inspected for defects. Material found to be defective before or after laying shall be replaced with sound material without additional expense to the Government. Rubber gaskets that are not to be installed immediately shall be stored in a cool and dark place.

1.6.1 Coated and Wrapped Steel Pipe

Coated and wrapped steel pipe shall be handled in conformance with AWWA C203.

1.6.2 Polyethylene (PE) Pipe Fittings and Accessories

PE pipe, fittings, and accessories shall be handled in conformance with AWWA C901.

1.6.3 Miscellaneous Plastic Pipe and Fittings

Polyvinyl Chloride (PVC), Reinforced Thermosetting Resin Pipe (RTRP), and Reinforced Plastic Mortar Pressure (RPMP) pipe and fittings shall be handled and stored in accordance with the manufacturer's recommendations. Storage facilities shall be classified and marked in accordance with NFPA 704, with classification as indicated in NFPA 49 and NFPA 325-1.

PART 2 PRODUCTS

2.1 PIPE

Pipe shall conform to the respective specifications and other requirements specified below.

2.1.1 Reinforced and Prestressed Concrete Pipe

Steel cylinder reinforced concrete pipe shall conform to AWWA C300, AWWA C301, or AWWA C303 and shall be designed to withstand a working pressure of not less than 150 psi unless otherwise shown or specified.

2.1.2 Plastic Pipe

2.1.2.1 PE Plastic Pipe

Pipe, tubing, and heat-fusion fittings shall conform to AWWA C901.

2.1.2.2 PVC Plastic Pipe

Pipe, couplings and fittings shall be manufactured of material conforming to ASTM D 1784, Class 12454B.

a. Pipe Less Than 4 inch Diameter:

(1) Screw-Joint: Pipe shall conform to dimensional requirements of ASTM D 1785 Schedule 80, with joints meeting requirements of 150 psi working pressure, 200 psi hydrostatic test pressure, unless otherwise shown or specified. Pipe couplings when used, shall be tested as required by ASTM D 2464.

(2) Elastomeric-Gasket Joint: Pipe shall conform to dimensional requirements of ASTM D 1785 Schedule 40, with joints meeting the requirements of 150 psi working pressure, 200 psi hydrostatic test pressure, unless otherwise shown or specified, or it may be pipe conforming to requirements of ASTM D 2241, elastomeric joint, with the following applications:

SDR	Maximum Working Pressure psi	Minimum Hydrostatic Pressure psi
26	100	133
21	120	160
17	150	200
13.5	200	266

(3) Solvent Cement Joint: Pipe shall conform to dimensional requirements of ASTM D 1785 or ASTM D 2241 with joints meeting the requirements of 150 psi working pressure and 200 psi hydrostatic test pressure.

b. Pipe 4 through 12 inch Diameter: Pipe, couplings and fittings shall conform to AWWA C900, Class 150, CIOD pipe dimensions, elastomeric-gasket joint, unless otherwise shown or specified.

c. Pipe 14 through 36 inch Diameter: Pipe shall conform to AWWA C905 unless otherwise shown or specified.

2.1.2.3 Oriented Polyvinyl Chloride (PVCO) Plastic Pipe

Pipe, couplings, and fittings shall be manufactured of material conforming to ASTM D 1784, Class 12454-B. Pipe shall conform to AWWA C909, Class 150, and to ASTM F 1483 and shall have an outside diameter equal to cast iron outside diameter.

2.1.3 Reinforced Plastic Mortar Pressure (RPMP) Pipe

RPMP shall be produced by centrifugal casting and shall have an OD 12 to 48 inches equal to ductile-iron, with a 150 psi pressure rating and with a minimum pipe stiffness of 36 psi. RPMP shall be in accordance with AWWA C950.

2.1.4 Reinforced Thermosetting Resin Pipe (RTRP)

Pipe shall have a quick-burst strength greater than or equal to four times

the normal working pressure of the pipe. The quick-burst strength test shall conform to the requirements of ASTM D 1599.

2.1.4.1 RTRP-I

RTRP-I shall conform to ASTM D 2996, except pipe shall have an outside diameter equal to cast iron outside diameter or standard weight steel pipe. The pipe shall be suitable for a normal working pressure of 150 psi at 73 degrees F. The inner surface of the pipe shall have a smooth uniform continuous resin-rich surface liner conforming to ASTM D 2996.

2.1.4.2 RTRP-II

RTRP-II shall conform to ASTM D 2997. Pipe shall have an outside diameter equal to standard weight steel pipe.

2.1.5 Ductile-Iron Pipe

Ductile-iron pipe shall conform to AWWA C151, working pressure not less than 150 psi, unless otherwise shown or specified. Pipe shall be cement-mortar lined in accordance with AWWA C104. Linings shall be standard. When installed underground, pipe shall be encased with polyethylene in accordance with AWWA C105. Flanged ductile iron pipe with threaded flanges shall be in accordance with AWWA C115.

2.1.6 Omitted

2.1.7 Copper Tubing

Copper tubing shall conform to ASTM B 88, Type K, annealed.

2.2 FITTINGS AND SPECIALS

2.2.1 Reinforced Concrete Pipe System

Fittings and specials required for closures, curves, bends, branches and connections to valves, pipe, or structures shall be approved by the Contracting Officer and conform to the details furnished by the manufacturer and to AWWA C300, AWWA C301, or AWWA C303, as applicable.

2.2.2 PVC Pipe System

a. For pipe less than 4 inch diameter, fittings for threaded pipe shall conform to requirements of ASTM D 2464, threaded to conform to the requirements of ASME B1.20.1 for use with Schedule 80 pipe and fittings; fittings for solvent cement jointing shall conform to ASTM D 2466 or ASTM D 2467; and fittings for elastomeric-gasket joint pipe shall be iron conforming to AWWA C110 or AWWA C111. Iron fittings and specials shall be cement-mortar lined (standard thickness) in accordance with AWWA C104.

b. For pipe 4 inch diameter and larger, fittings and specials shall be iron, bell end in accordance with AWWA C110, 150 psi pressure rating unless otherwise shown or specified, except that profile of

bell may have special dimensions as required by the pipe manufacturer; or fittings and specials may be of the same material as the pipe with elastomeric gaskets, all in conformance with AWWA C900. Iron fittings and specials shall be cement-mortar lined (standard thickness) in accordance with AWWA C104. Fittings shall be bell and spigot or plain end pipe, or as applicable. Ductile iron compact fittings shall be in accordance with AWWA C153.

2.2.3 RTRP and RPMP Pipe

Fittings and specials shall be compatible with the pipe supplied. Filament wound or molded fittings up to 6 inches shall conform to AWWA C950. Iron fittings shall be cement-mortar lined in accordance with AWWA C104 and shall conform to AWWA C110 and AWWA C111. Fittings shall be suitable for working and testing pressures specified for the pipe.

2.2.4 Ductile-Iron Pipe System

Fittings and specials shall be suitable for 150 psi pressure rating, unless otherwise specified. Fittings and specials for mechanical joint pipe shall conform to AWWA C110. Fittings and specials for use with push-on joint pipe shall conform to AWWA C110 and AWWA C111. Fittings and specials for grooved and shouldered end pipe shall conform to AWWA C606. Fittings and specials shall be cement-mortar lined (standard thickness) in accordance with AWWA C104. Ductile iron compact fittings shall conform to AWWA C153.

2.2.5 Omitted

2.2.6 Copper Tubing System

Fittings and specials shall be flared and conform to ASME B16.26.

2.3 JOINTS

2.3.1 Gaskets for Reinforced Concrete Pipe

Rubber-gasket joints shall be of the type using a bell-and-spigot joint design of steel. The gaskets shall conform to AWWA C300, AWWA C301, or AWWA C303, as applicable.

2.3.2 Plastic Pipe Jointing

2.3.2.1 PE Pipe

Joints for pipe fittings and couplings shall be strong tight joints as specified for PE in Paragraph INSTALLATION. Joints connecting pipe of differing materials shall be made in accordance with the manufacturer's recommendation, and as approved by the Contracting Officer.

2.3.2.2 PVC Pipe

Joints, fittings, and couplings shall be as specified for PVC pipe. Joints connecting pipe of differing materials shall be made in accordance with the manufacturer's recommendations, and as approved by the Contracting Officer.

2.3.2.3 PVCO Pipe

Joints shall conform to ASTM D 3139. Elastomeric gaskets shall conform to ASTM F 477.

2.3.3 RPMP Pipe

Joints shall be bell and spigot gasket coupling utilizing an elastomeric gasket in accordance with ASTM D 4161.

2.3.4 RTRP Pipe

2.3.4.1 RTRP-I, Grade 1 and 2

Joints shall be bell and spigot with elastomeric gasket, mechanical coupling with elastomeric gasket, threaded and bonded coupling, or tapered bell and spigot with compatible adhesive. All RTRP-I materials shall be products of a single manufacturer.

2.3.4.2 RTRP-II, Grade 1 and 2

Joints shall be the bell and spigot type with elastomeric gasket, bell and spigot with adhesive, butt-jointed with adhesive bonded reinforced overlay, mechanical, flanged, threaded or commercially available proprietary joints, provided they are capable of conveying water at the pressure and temperature of the pipe.

2.3.5 Ductile-Iron Pipe Jointing

a. Mechanical joints shall be of the stuffing box type and shall conform to AWWA C111.

b. Push-on joints shall conform to AWWA C111.

c. Rubber gaskets and lubricants shall conform to the applicable requirements of AWWA C111.

2.3.6 Steel Pipe Jointing

2.3.6.1 Steel Pipe, Not Galvanized

a. Mechanical couplings shall be as specified.

b. Bell-and-spigot joints for use with rubber gaskets shall conform to AWWA C200, as appropriate for the type of pipe. Rubber gaskets shall conform to applicable requirements of AWWA C200.

c. Flanges shall conform to AWWA C207, and shall be used only in above ground installation or where shown on the drawings, or when approved.

2.3.6.2 Mechanical Couplings

Mechanical couplings for steel pipe shall be the sleeve type, or when approved, the split-sleeve type and shall provide a tight flexible joint under all reasonable conditions, such as pipe movements caused by expansion, contraction, slight setting or shifting in the ground, minor variations in trench gradients, and traffic vibrations. Couplings shall be of strength not less than the adjoining pipeline.

2.3.7 Omitted

2.3.8 Isolation Joints

Isolation joints shall be installed between nonthreaded ferrous and nonferrous metallic pipe, fittings and valves. Isolation joints shall consist of a sandwich-type flange isolation gasket of the dielectric type, isolation washers, and isolation sleeves for flange bolts. Isolation gaskets shall be full faced with outside diameter equal to the flange outside diameter. Bolt isolation sleeves shall be full length. Units shall be of a shape to prevent metal-to-metal contact of dissimilar metallic piping elements.

a. Sleeve-type couplings shall be used for joining plain end pipe sections. The two couplings shall consist of one steel middle ring, two steel followers, two gaskets, and the necessary steel bolts and nuts to compress the gaskets.

b. Split-sleeve type couplings may be used in aboveground installations when approved in special situations and shall consist of gaskets and a housing in two or more sections with the necessary bolts and nuts.

2.3.9 Copper Tubing Jointing

Joints shall be compression-pattern flared and shall be made with the specified fittings.

2.4 VALVES

2.4.1 Check Valves

Check valves shall be designed for a minimum working pressure of 150 psi or as indicated. Valves shall have a clear waterway equal to the full nominal diameter of the valve. Valves shall open to permit flow when inlet pressure is greater than the discharge pressure, and shall close tightly to prevent return flow when discharge pressure exceeds inlet pressure. The size of the valve, working pressure, manufacturer's name, initials, or trademark shall be cast on the body of each valve. Valves 2 inches and larger shall be outside lever and spring type.

a. Valves 2 inches and smaller shall be all bronze designed for screwed fittings, and shall conform to MSS SP-80, Class 150, Types 3 and 4 as suitable for the application.

b. Valves larger than 2 inches shall be iron body, bronze mounted, shall have flanged ends, and shall be the non-slam type. Flanges

shall be the Class 125 type conforming to ASME B16.1.

2.4.2 Gate Valves

Gate valves shall be designed for a working pressure of not less than 150 psi. Valve connections shall be as required for the piping in which they are installed. Valves shall have a clear waterway equal to the full nominal diameter of the valve, and shall be opened by turning counterclockwise. The operating nut or wheel shall have an arrow, cast in the metal, indicating the direction of opening.

a. Valves smaller than 3 inches shall be all bronze and shall conform to MSS SP-80, Type 1, Class 150.

b. Valves 3 inches and larger shall be iron body, bronze mounted, and shall conform to AWWA C500. Flanges shall not be buried. An approved pit shall be provided for all flanged connections.

c. Resilient-Seated Gate Valves: For valves 3 to 12 inches in size, resilient-seated gate valves shall conform to AWWA C509.

2.4.3 Rubber-Seated Butterfly Valves

Rubber-seated butterfly valves shall conform to the performance requirements of AWWA C504. Wafer type valves conforming to the performance requirements of AWWA C504 in all respects, but not meeting laying length requirements will be acceptable if supplied and installed with a spacer providing the specified laying length. All tests required by AWWA C504 shall be met. Flanged-end valves shall be installed in an approved pit and provided with a union or sleeve-type coupling in the pit to permit removal. Mechanical-end valves 3 through 10 inches in diameter may be direct burial if provided with a suitable valve box, means for manual operation, and an adjacent pipe joint to facilitate valve removal. Valve operators shall restrict closing to a rate requiring approximately 60 seconds, from fully open to fully closed.

2.4.4 Omitted

2.4.5 Omitted

2.4.6 Indicator Post for Valves

Each valve shown on the drawings with the designation "P.I.V." shall be equipped with indicator post conforming to the requirements of NFPA 24. Operation shall be by a wrench which shall be attached to each post.

2.5 VALVE BOXES

Valve boxes shall be cast iron or concrete, except that concrete boxes may be installed only in locations not subjected to vehicular traffic. Cast-iron boxes shall be extension type with slide-type adjustment and with flared base. The minimum thickness of metal shall be 3/16 inch. Concrete boxes shall be the standard product of a manufacturer of precast concrete equipment. The word "WATER" shall be cast in the cover. The box length

shall adapt, without full extension, to the depth of cover required over the pipe at the valve location.

2.6 VALVE PITS

Valve pits shall be constructed at locations indicated or as required above and in accordance with the details shown. Concrete shall have compressive strength of 3000 psi in accordance with Section 03300CAST-IN-PLACE STRUCTURAL CONCRETE.

2.7 FIRE HYDRANTS

Hydrants shall be dry-barrel type conforming to AWWA C502 with valve opening at least 5 inches in diameter and designed so that the flange at the main valve seat can be removed with the main valve seat apparatus remaining intact, closed and reasonably tight against leakage and with a breakable valve rod coupling and breakable flange connections located no more than 8 inches above the ground grade. Hydrants shall have a 6 inch bell connection, two 2-1/2 inch hose connections and one 4-1/2 inch pumper connection. Outlets shall have American National Standard fire-hose coupling threads. Working parts shall be bronze. Design, material, and workmanship shall be equal to the latest stock pattern ordinarily produced by the manufacturer. Hydrants shall be painted with 1 coat of red iron oxide, zinc oxide primer conforming to SSPC Paint 25 and 2 finish coats of silicone alkyd paint conforming to SSPC Paint 21, of the installation's standard colors or as directed by the Contracting Officer. Suitable bronze adapter for each outlet, with caps, shall be furnished.

2.8 OMITTED

2.9 MISCELLANEOUS ITEMS

2.9.1 Service Clamps

Service clamps shall have a pressure rating not less than that of the pipe to be connected and shall be either the single or double flattened strap type. Clamps shall have a galvanized malleable-iron body with cadmium plated straps and nuts. Clamps shall have a rubber gasket cemented to the body.

2.9.2 Corporation Stops

Corporation stops shall have standard corporation stop thread conforming to AWWA C800 on the inlet end, with flanged joints, compression pattern flared tube couplings, or wiped joints for connections to goosenecks.

2.9.3 Goosenecks

Copper tubing for gooseneck connections shall conform to the applicable requirements of ASTM B 88, Type K, annealed. Length of cable requirement connections shall be in accordance with standard practice.

2.9.4 Service Stops

Service stops shall be water-works inverted-ground-key type, oval or round flow way, tee handle, without drain. Pipe connections shall be suitable for the type of service pipe used. All parts shall be of bronze with female iron-pipe-size connections or compression-pattern flared tube couplings, and shall be designed for a hydrostatic test pressure not less than 200 psi.

2.9.5 Tapping Sleeves

Tapping sleeves of the sizes indicated for connection to existing main shall be the cast gray, ductile, or malleable iron, split-sleeve type with flanged or grooved outlet, and with bolts, follower rings and gaskets on each end of the sleeve. Construction shall be suitable for a maximum working pressure of 150 psi. Bolts shall have square heads and hexagonal nuts. Longitudinal gaskets and mechanical joints with gaskets shall be as recommended by the manufacturer of the sleeve. When using grooved mechanical tee, it shall consist of an upper housing with full locating collar for rigid positioning which engages a machine-cut hole in pipe, encasing an elastomeric gasket which conforms to the pipe outside diameter around the hole and a lower housing with positioning lugs, secured together during assembly by nuts and bolts as specified, pretorqued to 50 foot-pound.

2.9.6 Service Boxes

Service boxes shall be cast iron or concrete and shall be extension service boxes of the length required for the depth of the line, with either screw or slide-type adjustment. The boxes shall have housings of sufficient size to completely cover the service stop or valve and shall be complete with identifying covers.

2.9.7 Disinfection

Chlorinating materials shall conform to the following:

Chlorine, Liquid: AWWA B301.

Hypochlorite, Calcium and Sodium: AWWA B300.

2.9.8 Meters

Meters shall be provided by NCNG utility company.

2.9.9 Meter Boxes

Meter boxes shall be provided by NCNG utility company..

PART 3 EXECUTION

3.1 INSTALLATION

3.1.1 Cutting of Pipe

Cutting of pipe shall be done in a neat and workmanlike manner without damage to the pipe. Unless otherwise recommended by the manufacturer and

authorized by the Contracting Officer, cutting shall be done with an approved type mechanical cutter. Wheel cutter shall be used when practicable. Copper tubing shall be cut square and all burrs shall be removed. Squeeze type mechanical cutters shall not be used for ductile iron.

3.1.2 Adjacent Facilities

3.1.2.1 Sewer Lines

Where the location of the water pipe is not clearly defined in dimensions on the drawings, the water pipe shall not be laid closer horizontally than 10 feet from a sewer except where the bottom of the water pipe will be at least 12 inches above the top of the sewer pipe, in which case the water pipe shall not be laid closer horizontally than 6 feet from the sewer. Where water lines cross under gravity-flow sewer lines, the sewer pipe, for a distance of at least 10 feet each side of the crossing, shall be fully encased in concrete or shall be made of pressure pipe with no joint located within 3 feet horizontally of the crossing. Water lines shall in all cases cross above sewage force mains or inverted siphons and shall be not less than 2 feet above the sewer main. Joints in the sewer main, closer horizontally than 3 feet to the crossing, shall be encased in concrete.

3.1.2.2 Water Lines

Water lines shall not be laid in the same trench with sewer lines, gas lines, fuel lines, or electric wiring.

3.1.2.3 Copper Tubing Lines

Copper tubing shall not be installed in the same trench with ferrous piping materials.

3.1.2.4 Nonferrous Metallic Pipe

Where nonferrous metallic pipe, e.g. copper tubing, crosses any ferrous piping material, a minimum vertical separation of 12 inchesshall be maintained between pipes.

3.1.3 Joint Deflection

3.1.3.1 Allowable for Reinforced Concrete Pipe

Maximum allowable deflections from a straight line or grade, as required by vertical curves, horizontal curves, or offsets, shall be 5 degrees for reinforced concrete pipe unless a lesser amount is recommended by the manufacturer. Long radius curves in reinforced concrete pipe shall be formed by straight pipe in which spigot rings are placed on a bevel. Slight deflections may be made by straight pipe, provided that the maximum joint opening caused by such deflection does not exceed the maximum recommended by the pipe manufacturer. Short radius curves and closures shall be formed by shorter lengths of pipe, bevels, or fabricated specials specified.

3.1.3.2 Offset for Flexible Plastic Pipe

Maximum offset in alignment between adjacent pipe joints shall be as recommended by the manufacturer and approved by the Contracting Officer, but shall not exceed 5 degrees.

3.1.3.3 Allowable for Ductile-Iron Pipe

The maximum allowable deflection shall be as given in AWWA C600. If the alignment requires deflection in excess of the above limitations, special bends or a sufficient number of shorter lengths of pipe shall be furnished to provide angular deflections within the limit set forth.

3.1.3.4 Allowable for Steel Pipe

For pipe with bell-and-spigot rubber-gasket joints, maximum allowable deflections from a straight line or grade, as required by vertical curves, horizontal curves, or offsets shall be 5 degrees unless a lesser amount is recommended by the manufacturer. Short-radius curves and closures shall be formed by short lengths of pipe or fabricated specials specified.

3.1.3.5 Allowable for RPMP Pipe

For pipe with bell and spigot rubber gasket joints, maximum allowable deflections from a straight line or grade shall be 4 degrees determined by the diameter, unless a lesser amount is recommended by the manufacturer. Short-radius curves and closures shall be formed by short lengths of pipe or fabricated specials specified.

3.1.4 Placing and Laying

Pipe and accessories shall be carefully lowered into the trench by means of derrick, ropes, belt slings, or other authorized equipment. Water-line materials shall not be dropped or dumped into the trench. Abrasion of the pipe coating shall be avoided. Except where necessary in making connections with other lines or as authorized by the Contracting Officer, pipe shall be laid with the bells facing in the direction of laying. The full length of each section of pipe shall rest solidly upon the pipe bed, with recesses excavated to accommodate bells, couplings, and joints. Pipe that has the grade or joint disturbed after laying shall be taken up and relaid. Pipe shall not be laid in water or when trench conditions are unsuitable for the work. Water shall be kept out of the trench until joints are complete. When work is not in progress, open ends of pipe, fittings, and valves shall be securely closed so that no trench water, earth, or other substance will enter the pipes or fittings. Where any part of the coating or lining is damaged, the repair shall be made by and at the Contractor's expense in a satisfactory manner. Pipe ends left for future connections shall be valved, plugged, or capped, and anchored, as shown.

3.1.4.1 Reinforced Concrete Pipe Installation

Reinforced concrete pipe shall be installed in accordance with recommendations of the pipe manufacturer. Before laying reinforced concrete pipe, the outside surface of the spigot and the inside surface of

the bell shall be cleaned and an acceptable vegetable-compound lubricant applied to the inside surface of the bell and to the rubber gasket. Where prescribed by the pipe manufacturer, the gasket shall be placed in the groove on the end of the pipe before the pipe is placed in the trench. After the pipe has been forced together, the position of the rubber gasket shall be checked with a feeler gauge in accordance with the pipe manufacturer's recommendations. Tapping of reinforced concrete cylinder pipe shall be done in accordance with the manufacturer's approved recommendations. Where the manufacturer recommends that the taps be made by attaching the rubber-gasketed saddle to the outside of the pipe using U-bolts, the saddle shall be grouted in if necessary, the mortar coating shall be chipped away, even with the hole in the saddle plate. The exposed circumferential wires shall be removed and the cylinder and concrete core drilled out, and the steel saddle and U-bolts shall be protected by concrete encasement.

3.1.4.2 Plastic Pipe Installation

RTRP shall be installed in accordance with ASTM D 3839. RPMP shall be installed in accordance with the manufacturer's recommendations. PE Pipe shall be installed in accordance with ASTM D 2774. PVC pipe shall be installed in accordance with AWWA M23.

3.1.4.3 Piping Connections

Where connections are made between new work and existing mains, the connections shall be made by using specials and fittings to suit the actual conditions. When made under pressure, these connections shall be installed using standard methods as approved by the Contracting Officer. Connections to existing asbestos-cement pipe shall be made in accordance with ACPPA Work Practices.

3.1.4.4 Penetrations

Pipe passing through walls of valve pits and structures shall be provided with ductile-iron or Schedule 40 steel wall sleeves. Annular space between walls and sleeves shall be filled with rich cement mortar. Annular space between pipe and sleeves shall be filled with mastic.

3.1.4.5 Flanged Pipe

Flanged pipe shall only be installed above ground or with the flanges in valve pits.

3.1.5 Jointing

3.1.5.1 Reinforced Concrete Pipe Requirements

The inside and outside annular spaces between abutting sections of concrete pipe shall be filled with rich cement mortar in accordance with the pipe manufacturer's recommendations. Excess mortar shall be removed from interior annular spaces, leaving a smooth and continuous surface between pipe sections. Exposed portions of steel joint rings shall be protected from corrosion by a metallic coating or by an approved nonmetallic coating.

Rubber gaskets shall be handled, lubricated where necessary, and installed in accordance with the pipe manufacturer's recommendations.

3.1.5.2 PE Pipe Requirements

Jointing shall comply with ASTM D 2657, Technique I-Socket Fusion or Technique II-Butt Fusion.

3.1.5.3 PVC Plastic Pipe Requirements

a. Pipe less than 4 inch diameter: Threaded joints shall be made by wrapping the male threads with approved thread tape or applying an approved lubricant, then threading the joining members together. The joint shall be tightened using strap wrenches to prevent damage to the pipe and/or fitting. To avoid excessive torque, joints shall be tightened no more than one thread past hand-tight. Preformed rubber-ring gaskets for elastomeric-gasket joints shall be made in accordance with ASTM F 477 and as specified. Pipe ends for push-on joints shall be beveled to facilitate assembly and marked to indicate when the pipe is fully seated. The gasket shall be prelubricated to prevent displacement. The gasket and ring groove in the bell or coupling shall match. The manufacturer of the pipe or fitting shall supply the elastomeric gasket. Couplings shall be provided with stops or centering rings to assure that the coupling is centered on the joint. Solvent cement joints shall use sockets conforming to ASTM D 2467. The solvent cement used shall meet the requirements of ASTM D 2564; the joint assembly shall be made in accordance with ASTM D 2855 and the manufacturer's specific recommendations.

b. Pipe 4 through 12 inch diameter: Joints shall be elastomeric gasket as specified in AWWA C900. Jointing procedure shall be as specified for pipe less than 4 inch diameter with configuration using elastomeric ring gasket.

c. Pipe 14 through 36 inch diameter: Joints shall be elastomeric gasket push-on joints made in accordance with AWWA M23.

3.1.5.4 RTRP I, RTRP II and RPMP Pipe

a. RTRP I: Assembly of the pipe shall be done in conformance with the manufacturer's written instruction and installation procedures. Field joints shall be prepared as specified by the pipe manufacturer. Several pipe joints having interference-fit type couplings may be field bonded and cured simultaneously. However, the pipe shall not be moved and additional joints shall not be made until the previously laid joints are completely cured. Joints not having interference-fit type coupling shall be fitted with a clamp which shall hold the joint rigidly in place until the joint cement has completely cured. The clamps shall have a protective material on the inner surface to prevent damage to the plastic pipe when the clamp is tightened in place. The pipe manufacturer shall provide a device or method to determine when the joint is pulled against the pipe stop. Additionally, the pipe

manufacturer shall furnish a gauge to measure the diameter of the spigot ends to ensure the diameter conforms to the tolerances specified by the manufacturer. All pipe ends shall be gauged. Factory certified tests shall have been satisfactorily performed to verify that short-term rupture strength is 1,500 psior greater when carried out in accordance with ASTM D 1599. At any ambient temperature, field bonded epoxy-cemented joints shall be cured with a self-regulating, thermostatically temperature controlled, electrical heating blanket for the time and temperature recommended by the manufacturer for the applicable size and type of joint, or by an alternate heating method recommended by the manufacturer and approved by the Contracting Officer. The joint sections shall not be moved during heating, or until the joint has cooled to ambient temperature.

b. RTRP II: A reinforced overlay joint shall be used to join sections together through a placement of layers of reinforcement fiberglass roving, mat, tape or fabric thoroughly saturated with compatible catalyzed resin.

c. RPMP: Bell and spigot gasket-sealing coupling shall be used to connect pipes. The spigot shall be lubricated prior to push-together assembly.

d. Fittings and Specials for RTRP and RPMP Pipe: Metal to RTRP and RPMP pipe connections shall be made by bolting steel flanges to RTRP and RPMP pipe flanges. Cast-iron fitting with gasket bell or mechanical joint may be used with RTRP if pipe has cast iron outside diameter. Steel flanges shall be flat-faced type. Where raised-face steel flanges are used, spacer rings shall be used to provide a flat-face seat for RTRP and RPMP pipe flanges. A full-face Buna "N" gasket 1/8 inch thick with a shore hardness of 50-60 shall be used between all flanged connections. The RTRP and RPMP pipe flange shall have raised sealing rings. Flat washers shall be used under all nuts and bolts on RTRP and RPMP pipe flanges. Bolts and nuts shall be of noncorrosive steel and torqued to not more than 100 foot pounds.Flanges shall not be buried. A concrete pit shall be provided for all flanged connections.

3.1.5.5 Ductile-Iron Pipe Requirements

Mechanical and push-on type joints shall be installed in accordance with AWWA C600 for buried lines or AWWA C606 for grooved and shouldered pipe above ground or in pits.

3.1.5.6 Not Galvanized Steel Pipe Requirements

a. Mechanical Couplings: Mechanical couplings shall be installed in accordance with the recommendations of the couplings manufacturer.

b. Rubber Gaskets: Rubber gaskets shall be handled, lubricated where necessary, and installed in accordance with the pipe manufacturer's recommendations.

3.1.5.7 Galvanized Steel Pipe Requirements

Screw joints shall be made tight with a stiff mixture of graphite and oil, inert filler and oil, or with an approved graphite compound, applied with a brush to the male threads only. Compounds shall not contain lead.

3.1.5.8 Copper Tubing Requirements

Joints shall be made with flared fittings. The flared end tube shall be pulled tightly against the tapered part of the fitting by a nut which is part of the fitting, so there is metal-to-metal contact.

3.1.5.9 Bonded Joints Requirements

Bonded joints shall be installed in accordance with details specified for joints in paragraph JOINTS.

3.1.5.10 Isolation Joints and Dielectric Fittings

Isolation joints and dielectric fittings shall be installed in accordance with details specified in paragraph JOINTS. Dielectric unions shall be encapsulated in a field-poured coal-tar covering, with at least 1/8 inch thickness of coal tar over all fitting surfaces.

3.1.5.11 Transition Fittings

Connections between different types of pipe and accessories shall be made with transition fittings approved by the Contracting Officer.

3.1.6 Installation of Service Lines

Service lines shall include the pipeline connecting building piping to water distribution lines to the connections with the building service at a point approximately 5 feet outside the building where such building service exists. Where building services are not installed, the Contractor shall terminate the service lines approximately 5 feet from the site of the proposed building at a point designated by the Contracting Officer. Such service lines shall be closed with plugs or caps. All service stops and valves shall be provided with service boxes. Service lines shall be constructed in accordance with the following requirements:

3.1.6.1 Service Lines (2 Inches) and Smaller

Service lines 2 inches and smaller shall be connected to the main by a directly-tapped corporation stop or by a service clamp. A corporation stop and a copper gooseneck shall be provided with either type of connection. Maximum sizes for directly-tapped corporation stops and for outlets with service clamps shall be as in TABLE I. Where 2 or more gooseneck connections to the main are required for an individual service, such connections shall be made with standard branch connections. The total clear area of the branches shall be at least equal to the clear area of the service which they are to supply.

TABLE I. SIZE OF CORPORATION STOPS AND OUTLET

Pipe Size Inches	Corporation Stops, Inches For Ductile-Iron Pipe	Outlets w/Service Clamps, Inches Single & Double Strap
3	--	1
4	1	1
6	1-1/4	1-1/2
8	1-1/2	2
10	1-1/2	2
12 & larger	2	2

NOTE:

a. Service lines 1-1/2 inches and smaller shall have a service stop.

b. Service lines 2 inches in size shall have a gate valve.

3.1.6.2 Service Lines Larger than 2 Inches

Service lines larger than 2 inches shall be connected to the main by a tapped saddle, tapping sleeve and valve, service clamp or reducing tee, depending on the main diameter and the service line diameter, and shall have a gate valve. Lines 3 inches and larger may use rubber-seated butterfly valves as specified above, or gate valves.

3.1.6.3 Service Lines for Sprinkler Supplies

Water service lines used to supply building sprinkler systems for fire protection shall be connected to the water distribution main in accordance with NFPA 24.

3.1.7 Omitted

3.1.8 Setting of Fire Hydrants, Meters, Valves and Valve Boxes

3.1.8.1 Location of Fire Hydrants

Fire hydrants shall be located and installed as shown. Each hydrant shall be connected to the main with a 6 inch branch line having at least as much cover as the distribution main. Hydrants shall be set plumb with pumper nozzle facing the roadway, with the center of the lowest outlet not less than 18 inches above the finished surrounding grade, and the operating nut not more than 48 inches above the finished surrounding grade. Fire hydrants designated on the drawings as low profile shall have the lowest outlet not less than 18 inches above the finished surrounding grade, the

top of the hydrant not more than 24 inches above the finished surrounding grade. Except where approved otherwise, the backfill around hydrants shall be thoroughly compacted to the finished grade immediately after installation to obtain beneficial use of the hydrant as soon as practicable. The hydrant shall be set upon a slab of concrete not less than 4 inches thick and 15 inchessquare. Not less than 7 cubic feet of free-draining broken stone or gravel shall be placed around and beneath the waste opening of dry barrel hydrants to ensure drainage.

3.1.8.2 Location of Meters

Meters and meter boxes shall be installed at the locations shown on the drawings. The meters shall be centered in the boxes to allow for reading and ease of removal or maintenance.

3.1.8.3 Location of Valves

After delivery, valves, including those in hydrants, shall be drained to prevent freezing and shall have the interiors cleaned of all foreign matter before installation. Stuffing boxes shall be tightened and hydrants and valves shall be fully opened and fully closed to ensure that all parts are in working condition. Check, pressure reducing, vacuum, and air relief valves shall be installed in valve pits. Valves and valve boxes shall be installed where shown or specified, and shall be set plumb. Valve boxes shall be centered on the valves. Boxes shall be installed over each outside gate valve unless otherwise shown. Where feasible, valves shall be located outside the area of roads and streets. Earth fill shall be tamped around each valve box or pit to a distance of 4 feet on all sides of the box, or the undisturbed trench face if less than 4 feet.

3.1.8.4 Location of Service Boxes

Where water lines are located below paved streets having curbs, the boxes shall be installed directly back of the curbs. Where no curbing exists, service boxes shall be installed in accessible locations, beyond the limits of street surfacing, walks and driveways.

3.1.9 Tapped Tees and Crosses

Tapped tees and crosses for future connections shall be installed where shown.

3.1.10 Thrust Restraint

Plugs, caps, tees and bends deflecting 11.25 degrees or more, either vertically or horizontally, on waterlines 4 inches in diameter or larger, and fire hydrants shall be provided with thrust restraints. Valves shall be securely anchored or shall be provided with thrust restraints to prevent movement. Thrust restraints shall be either thrust blocks or, for ductile-iron pipes, restrained joints.

3.1.10.1 Thrust Blocks

Thrust blocking shall be concrete of a mix not leaner than: 1 cement,

2-1/2 sand, 5 gravel; and having a compressive strength of not less than 2,000 psi after 28 days. Blocking shall be placed between solid ground and the hydrant or fitting to be anchored. Unless otherwise indicated or directed, the base and thrust bearing sides of thrust blocks shall be poured directly against undisturbed earth. The sides of thrust blocks not subject to thrust may be poured against forms. The area of bearing shall be as shown or as directed. Blocking shall be placed so that the fitting joints will be accessible for repair. Steel rods and clamps, protected by galvanizing or by coating with bituminous paint, shall be used to anchor vertical down bends into gravity thrust blocks.

3.1.10.2 Restrained Joints

For ductile-iron pipe, restrained joints shall be designed by the Contractor or the pipe manufacturer in accordance with DIPRA-Restraint Design.

3.2 HYDROSTATIC TESTS

Where any section of a water line is provided with concrete thrust blocking for fittings or hydrants, the hydrostatic tests shall not be made until at least 5 days after installation of the concrete thrust blocking, unless otherwise approved.

3.2.1 Pressure Test

After the pipe is laid, the joints completed, fire hydrants permanently installed, and the trench partially backfilled leaving the joints exposed for examination, the newly laid piping or any valved section of piping shall, unless otherwise specified, be subjected for 1 hour to a hydrostatic pressure test of 200 psi. Water supply lines designated on the drawings shall be subjected for 1 hour to a hydrostatic pressure test of 200 psi. Each valve shall be opened and closed several times during the test. Exposed pipe, joints, fittings, hydrants, and valves shall be carefully examined during the partially open trench test. Joints showing visible leakage shall be replaced or remade as necessary. Cracked or defective pipe, joints, fittings, hydrants and valves discovered in consequence of this pressure test shall be removed and replaced with sound material, and the test shall be repeated until the test results are satisfactory. The requirement for the joints to remain exposed for the hydrostatic tests may be waived by the Contracting Officer when one or more of the following conditions is encountered:

a. Wet or unstable soil conditions in the trench.

b. Compliance would require maintaining barricades and walkways around and across an open trench in a heavily used area that would require continuous surveillance to assure safe conditions.

c. Maintaining the trench in an open condition would delay completion of the project.

The Contractor may request a waiver, setting forth in writing the reasons for the request and stating the alternative procedure proposed to comply

with the required hydrostatic tests. Backfill placed prior to the tests shall be placed in accordance with the requirements of Section 02316 EXCAVATION, TRENCHING, AND BACKFILLING FOR UTILITIES SYSTEMS.

3.2.2 Leakage Test

Leakage test shall be conducted after the pressure tests have been satisfactorily completed. The duration of each leakage test shall be at least 2 hours, and during the test the water line shall be subjected to not less than 200 psi pressure. Water supply lines designated on the drawings shall be subjected to a pressure equal to 200 psi. Leakage is defined as the quantity of water to be supplied into the newly laid pipe, or any valved or approved section, necessary to maintain pressure within 5 psi of the specified leakage test pressure after the pipe has been filled with water and the air expelled. Piping installation will not be accepted if leakage exceeds the allowable leakage which is determined by the following formula:

L = 0.0001351ND(P raised to 0.5 power)

L = Allowable leakage in gallons per hour
N = Number of joints in the length of pipeline tested
D = Nominal diameter of the pipe in inches
P = Average test pressure during the leakage test, in psi gauge

Should any test of pipe disclose leakage greater than that calculated by the above formula, the defective joints shall be located and repaired until the leakage is within the specified allowance, without additional cost to the Government.

3.2.3 Time for Making Test

Except for joint material setting or where concrete thrust blocks necessitate a 5-day delay, pipelines jointed with rubber gaskets, mechanical or push-on joints, or couplings may be subjected to hydrostatic pressure, inspected, and tested for leakage at any time after partial completion of backfill. Cement-mortar lined pipe may be filled with water as recommended by the manufacturer before being subjected to the pressure test and subsequent leakage test.

3.2.4 Concurrent Hydrostatic Tests

The Contractor may elect to conduct the hydrostatic tests using either or both of the following procedures. Regardless of the sequence of tests employed, the results of pressure tests, leakage tests, and disinfection shall be as specified. Replacement, repair or retesting required shall be accomplished by the Contractor at no additional cost to the Government.

a. Pressure test and leakage test may be conducted concurrently.

b. Hydrostatic tests and disinfection may be conducted concurrently, using the water treated for disinfection to accomplish the hydrostatic tests. If water is lost when treated for disinfection and air is admitted to the unit being tested, or if any repair

procedure results in contamination of the unit, disinfection shall be reaccomplished.

3.3 BACTERIALDISINFECTION

3.3.1 Bacteriological Disinfection

Before acceptance of potable water operation, each unit of completed waterline shall be disinfected as prescribed by AWWA C651. From several points in the unit, personnel from the Contractor's commercial laboratory shall take at least 3 water samples from different points, approved by the Contracting Officer, in proper sterilized containers and perform a bacterial examination in accordance with state approved methods. The commercial laboratory shall be certified by the state's approving authority for examination of potable water. The disinfection shall be repeated until tests indicate the absence of pollution for at least 2 full days. The unit will not be accepted until satisfactory bacteriological results have been obtained.

3.4 CLEANUP

Upon completion of the installation of water lines, and appurtenances, all debris and surplus materials resulting from the work shall be removed.

-- End of Section --

SECTION TABLE OF CONTENTS

DIVISION 02 - SITE WORK

SECTION 02531

SANITARY SEWERS

05/98

PART 1 GENERAL

1.1 REFERENCES
1.2 GENERAL REQUIREMENTS
1.3 OMITTED
1.4 SUBMITTALS

PART 2 PRODUCTS

2.1 PIPE
2.1.1 Concrete Pipe
2.1.2 Plastic Pipe
2.1.2.1 ABS Pipe
2.1.2.2 PVC Pipe
2.1.2.3 High Density Polyethylene Pipe
2.1.3 Reinforced Plastic Mortar Pipe (RPMP)
2.1.4 Reinforced Thermosetting Resin Pipe (RTRP)
2.1.4.1 Filament Wound RTRP-I
2.1.4.2 Centrifugally Cast RTRP-II
2.1.5 Ductile Iron Pipe
2.2 REQUIREMENTS FOR FITTINGS
2.2.1 Fittings for Concrete Pipe
2.2.2 Fittings for Plastic Pipe
2.2.2.1 Fittings for ABS Pipe
2.2.2.2 Fittings for PVC Pipe
2.2.2.3 Fittings for High Density Polyethylene Pipe
2.2.3 Fittings for RPMP
2.2.4 Fittings for RTRP
2.2.5 Fittings for Ductile Iron Pipe
2.3 JOINTS
2.3.1 Concrete Pipe Jointing
2.3.2 Plastic Pipe Jointing
2.3.2.1 ABS Pipe Jointing
2.3.2.2 High Density Polyethylene Pipe Jointing
2.3.3 RPMP Jointing
2.3.4 RTRP Jointing
2.3.5 Ductile Iron Pipe Jointing
2.4 BRANCH CONNECTIONS
2.5 FRAMES AND COVERS
2.6 STEEL LADDER
2.7 CEMENT MORTAR
2.7.1 Portland Cement
2.7.2 Portland Cement Concrete

2.8 STRUCTURES
2.8.1 Precast Reinforced Concrete Manhole Sections
2.8.2 Glass-Fiber-Reinforced Polyester Manholes

PART 3 EXECUTION

3.1 INSTALLATION
3.1.1 Adjacent Facilities
3.1.1.1 Water Lines
3.1.1.2 Omitted
3.1.1.3 Structural Foundations
3.1.2 Pipe Laying
3.1.2.1 Caulked Joints
3.1.2.2 Trenches
3.1.2.3 Backfill
3.1.2.4 Width of Trench
3.1.2.5 Jointing
3.1.2.6 Handling and Storage
3.1.3 Leakage Tests
3.1.4 Test for Deflection
3.2 CONCRETE CRADLE AND ENCASEMENT
3.3 INSTALLATION OF WYE BRANCHES
3.4 MANHOLE DETAILS
3.4.1 General Requirements
3.4.2 Steel Ladder Anchorage
3.4.3 Jointing, Plastering and Sealing
3.4.4 Setting of Frames and Covers
3.4.5 External Preformed Rubber Joint Seals
3.5 CONNECTING TO EXISTING MANHOLES
3.6 BUILDING CONNECTIONS
3.7 CLEANOUTS AND OTHER APPURTENANCES

-- End of Section Table of Contents --

CEGS-02531 (May 1998)

Includes changes through Notice 1 (October 1999)

SECTION 02531

SANITARY SEWERS
05/98

PART 1 GENERAL

1.1 REFERENCES

The publications listed below form a part of this specification to the extent referenced. The publications are referred to in the text by basic designation only.

AMERICAN SOCIETY FOR TESTING AND MATERIALS (ASTM)

ASTM A 123/A 123M	(1997a) Zinc (Hot-Dip Galvanized) Coatings on Iron and Steel Products
ASTM C 14	(1995) Concrete Sewer, Storm Drain, and Culvert Pipe
ASTM C 33	(1993) Concrete Aggregates
ASTM C 76	(1998) Reinforced Concrete Culvert, Storm Drain, and Sewer Pipe
ASTM C 94	(1998) Ready-Mixed Concrete
ASTM C 150	(1997) Portland Cement
ASTM C 270	(1997ael) Mortar for Unit Masonry
ASTM C 443	(1998) Joints for Circular Concrete Sewer and Culvert Pipe, Using Rubber Gaskets
ASTM C 478	(1997) Precast Reinforced Concrete Manhole Sections

ASTM C 478M	(1997) Precast Reinforced Concrete Manhole Sections (Metric)
ASTM C 828	(1998) Low-Pressure Air Test of Vitrified Clay Pipe Lines
ASTM C 924	(1989; R 1997) Concrete Pipe Sewer Lines by Low-Pressure Air Test Method
ASTM C 972	(1995) Compression-Recovery of Tape Sealant
ASTM D 412	(1998a) Vulcanized Rubber and Thermoplastic Rubbers and Thermoplastic Elastomers - Tension
ASTM D 624	(1991; R 1998) Tear Strength of Conventional Vulcanized Rubber and Thermoplastic Elastomers
ASTM D 1784	(1999) Rigid Poly(Vinyl Chloride) (PVC) Compounds and Chlorinated Poly(Vinyl Chloride) (CPVC) Compounds
ASTM D 2680	(1995a)Acrylonitrile-Butadiene-Styrene (ABS) and Poly(Vinyl Chloride) (PVC) Composite Sewer Piping
ASTM D 2751	(1996a) Acrylonitrile-Butadiene-Styrene (ABS) Sewer Pipe and Fittings
ASTM D 2996	(1995) Filament-Wound "Fiberglass" (Glass-Fiber-Reinforced Thermosetting-Resin) Pipe
ASTM D 2997	(1995) Centrifugally Cast "Fiberglass" (Glass-Fiber-Reinforced-Thermosetting-Resin) Pipe
ASTM D 3034	(1998) Type PSM Poly(Vinyl Chloride) (PVC) Sewer Pipe and Fittings
ASTM D 3212	(1996a) Joints for Drain and Sewer Plastic Pipes Using Flexible Elastomeric Seals
ASTM D 3262	(1996) "Fiberglass" (Glass-Fiber-Reinforced Thermosetting-Resin) Sewer Pipe
ASTM D 3350	(1996) Polyethylene Plastics Pipe and Fittings Materials
ASTM D 3753	(1981; R 1991) Glass-Fiber-Reinforced Polyester Manholes

ASTM D 3840	(1988) "Fiberglass" (Glass-Fiber-Reinforced Thermosetting-Resin) Pipe Fittings for Nonpressure Applications
ASTM D 4161	(1996)"Fiberglass" (Glass-Fiber-Reinforced Thermosetting Resin) Pipe Joints Using Flexible Elastomeric Seals
ASTM F 402	(1993) Safe Handling of Solvent Cements, Primers, and Cleaners Used for Joining Thermoplastic Pipe and Fittings
ASTM F 477	(1996a) Elastomeric Seals (Gaskets) for Joining Plastic Pipe
ASTM F 714	(1997) Polyethylene (PE) Plastic pipe (SDR-PR) Based on Outside Diameter
ASTM F 794	(1997) Poly(Vinyl Chloride) (PVC) Profile Gravity Sewer Pipe and Fittings Based on Controlled Inside Diameter
ASTM F 894	(1998) Polyethylene (PE) Large Diameter Profile Wall Sewer and Drain Pipe
ASTM F 949	(1996a) Poly(Vinyl Chloride) (PVC) Corrugated Sewer Pipe with a Smooth Interior and Fittings

AMERICAN WATER WORKS ASSOCIATION (AWWA)

AWWA C110	(1993) Ductile-Iron and Gray-Iron Fittings, 3 In. Through 48 In. (75 mm through 1200 mm), for Water and Other Liquids
AWWA C111	(1995) Rubber-Gasket Joints for Ductile-Iron Pressure Pipe and Fittings
AWWA C115	(1996) Flanged Ductile-Iron Pipe with Ductile-Iron or Gray-Iron Threaded Flanges
AWWA C151	(1996) Ductile-Iron Pipe, Centrifugally Cast, for Water or Other Liquids

NATIONAL FIRE PROTECTION ASSOCIATION (NFPA)

NFPA 49	(1994) Hazardous Chemicals Data
NFPA 325-1	(1994) Fire Hazard Properties of Flammable Liquids, Gases, and Volatile Solids

NFPA 704	(1996) Identification of the Fire Hazards of Materials for Emergency Response

UNI-BELL PVC PIPE ASSOCIATION (UBPPA)

UBPPA UNI-B-6	(1990) Recommended Practice for the Low-Pressure Air Testing of Installed Sewer Pipe
UBPPA UNI-B-9	(1990; Addenda 1994) Recommended Performance Specification for Polyvinyl Chloride (PVC) Profile Wall Gravity Sewer Pipe and Fittings Based on Controlled Inside Diameter (Nominal Pipe Sizes 4-48 inch)

1.2 GENERAL REQUIREMENTS

The construction required herein shall include appurtenant structures and building sewers to points of connection with the building drains 5 feet outside the building to which the sewer system is to be connected. The Contractor shall replace damaged material and redo unacceptable work at no additional cost to the Government. Excavation and backfilling is specified in Section 02315 EXCAVATION, FILLING, AND BACKFILLING. Backfilling shall be accomplished after inspection by the Contracting Officer. Before, during, and after installation, plastic pipe and fittings shall be protected from any environment that would result in damage or deterioration to the material. The Contractor shall have a copy of the manufacturer's instructions available at the construction site at all times and shall follow these instructions unless directed otherwise by the Contracting Officer. Solvents, solvent compounds, lubricants, elastomeric gaskets, and any similar materials required to install the plastic pipe shall be stored in accordance with the manufacturer's recommendation and shall be discarded if the storage period exceeds the recommended shelf life. Solvents in use shall be discarded when the recommended pot life is exceeded.

1.3 OMITTED

1.4 SUBMITTALS

Government approval is required for submittals with a "G" designation; submittals not having a "G" designation are for information only. When used, a designation following the "G" designation identifies the office that will review the submittal for the Government. The following shall be submitted in accordance with Section 01330 SUBMITTAL PROCEDURES:

SD-07 Certificates

Portland Cement

Certificates of compliance stating the type of cement used in manufacture of concrete pipe, fittings and precast manholes.

Joints

Certificates of compliance stating that the fittings or gaskets used for waste drains are oil resistant.

PART 2 PRODUCTS

2.1 PIPE

Pipe shall conform to the respective specifications and other requirements specified below.

2.1.1 Concrete Pipe

Concrete pipe 24 inches or less in diameter, unless otherwise shown or specified, shall be nonreinforced and conform to ASTM C 14, Class 1. Concrete pipe greater than 24 inches in diameter shall be reinforced and conform to ASTM C 76, Class 2. Pipe less than 36 inches in diameter shall be bell and spigot type. Pipe 36 inches or greater in diameter shall be bell and spigot type, tongue and groove type, or modified tongue and groove type.

2.1.2 Plastic Pipe

Acrylonitrile-butadiene-styrene (ABS) and polyvinyl chloride (PVC) composite sewer piping shall conform to ASTM D 2680. Size 8 inch through 15 inch diameter.

2.1.2.1 ABS Pipe

ASTM D 2751.

2.1.2.2 PVC Pipe

ASTM D 3034, Type PSM with a maximum SDR of 35, Size 15 inches or less in diameter. ASTM F 949 for corrugated sewer pipes with a smooth interior. UBPPA UNI-B-9 and ASTM F 794, Series 46, for ribbed sewer pipe with smooth interior, size 8 inch through 48 inch diameters. PVC shall be certified by the compounder as meeting the requirements of ASTM D 1784, cell Class 12454B. The pipe stiffness shall be greater than or equal to 735/D for cohesionless material pipe trench backfills.

2.1.2.3 High Density Polyethylene Pipe

ASTM F 894, Class 63, size 18 inch through 120 inch. ASTM F 714, size 4 inch through 48 inch. The polyethylene shall be certified by the resin producer as meeting the requirements of ASTM D 3350, cell Class 334433C. The pipe stiffness shall be greater than or equal to 1170/D for cohesionless material pipe trench backfills.

2.1.3 Reinforced Plastic Mortar Pipe (RPMP)

Reinforced plastic mortar pipe shall be produced by centrifugal casting and shall have an outside diameter equal to dectile iron pipe dimensions from 18 inch to 48 inch. The inner surface of the pipe shall have a smooth

uniform continuous resin-rich surface liner. The minimum pipe stiffness shall be 36 psi. RPMP shall be in accordance with ASTM D 3262.

2.1.4 Reinforced Thermosetting Resin Pipe (RTRP)

ASTM D 3262.

2.1.4.1 Filament Wound RTRP-I

RTRP-I shall conform to ASTM D 2996, except pipe shall have an outside diameter equal to cast iron outside diameter or standard weight steel pipe. The pipe shall be suitable for a normal working pressure of 150 psi at 73 degrees F.The inner surface of the pipe shall have a smooth uniform continuous resin-rich surface liner conforming to ASTM D 2996.

2.1.4.2 Centrifugally Cast RTRP-II

RTRP-II shall conform to ASTM D 2997. Pipe shall have an outside diameter equal to standard weight steel pipe.

2.1.5 Ductile Iron Pipe

Pipe shall conform to AWWA C151 unless otherwise shown or specified.

2.2 REQUIREMENTS FOR FITTINGS

Fittings shall be compatible with the pipe supplied and shall have a strength not less than that of the pipe. Fittings shall conform to the respective specifications and other requirements specified below.

2.2.1 Fittings for Concrete Pipe

ASTM C 14 for pipe 24 inches or less in diameter. ASTM C 76 for pipe greater than 24 inches in diameter.

2.2.2 Fittings for Plastic Pipe

ABS and PVC composite sewer pipe fittings shall conform to ASTM D 2680.

2.2.2.1 Fittings for ABS Pipe

ASTM D 2751.

2.2.2.2 Fittings for PVC Pipe

ASTM D 3034 for type PSM pipe. ASTM F 949 for corrugated sewer pipe with a smooth interior. UBPPA UNI-B-9 and ASTM F 794, Series 46, for ribbed sewer pipe with smooth interior.

2.2.2.3 Fittings for High Density Polyethylene Pipe

ASTM F 894.

2.2.3 Fittings for RPMP

ASTM D 3840.

2.2.4 Fittings for RTRP

ASTM D 3262.

2.2.5 Fittings for Ductile Iron Pipe

Mechanical fittings shall conform to AWWA C110, rated for 150 psi. Push-on fittings shall conform to AWWA C110and AWWA C111, rated for 150 psi.

2.3 JOINTS

Joints installation shall comply with the manufacturer's instructions. Fittings and gaskets utilized for waste drains or industrial waste lines shall be certified by the manufacturer as oil resistant.

2.3.1 Concrete Pipe Jointing

Joints and gaskets shall conform to ASTM C 443.

2.3.2 Plastic Pipe Jointing

Flexible plastic pipe (PVC or high density polyethylene pipe) gasketed joints shall conform to ASTM D 3212.

2.3.2.1 ABS Pipe Jointing

ASTM D 2751, solvent weld or bell and spigot O-ring joint, size 12 inches or less in diameter, dimensions and tolerances in accordance with Table 2 of ASTM D 2751.

2.3.2.2 High Density Polyethylene Pipe Jointing

Rubber gasket joints shall conform to ASTM C 443.

2.3.3 RPMP Jointing

Joints shall be bell and spigot gasket coupling utilizing an elastomeric gasket in accordance with ASTM D 4161 and ASTM F 477.

2.3.4 RTRP Jointing

Joints shall be bell and spigot type utilizing an elastomeric gasket in accordance with ASTM F 477.

2.3.5 Ductile Iron Pipe Jointing

Push-on joints shall conform to AWWA C111. Mechanical joints shall conform to AWWA C111 as modified by AWWA C151. Flanged joints shall conform to AWWA C115.

2.4 BRANCH CONNECTIONS

Branch connections shall be made by use of regular fittings or solvent cemented saddles as approved. Saddles for ABS and PVC composite pipe shall conform to Figure 2 of ASTM D 2680; saddles for ABS pipe shall comply with Table 3 of ASTM D 2751; and saddles for PVC pipe shall conform to Table 4 of ASTM D 3034.

2.5 FRAMES AND COVERS

Frames and covers shall be cast iron, ductile iron or reinforced concrete. Cast iron frames and covers shall be as indicated or shall be of type suitable for the application, circular, without vent holes. The frames and covers shall have a combined weight of not less than 400 pounds. Reinforced concrete frames and covers shall be as indicated or shall conform to ASTM C 478 or ASTM C 478M. The word "Sewer" shall be stamped or cast into covers so that it is plainly visible.

2.6 STEEL LADDER

A steel ladder shall be provided where the depth of a manhole exceeds 3 feet. The ladder shall not be less than 16 inches in width, with 3/4 inch diameter rungs spaced 12 inches apart. The two stringers shall be a minimum 3/8 inch thick and 2 inches wide. Ladders and inserts shall be galvanized after fabrication in conformance with ASTM A 123/A 123M.

2.7 CEMENT MORTAR

Cement mortar shall conform to ASTM C 270, Type M with Type II cement.

2.7.1 Portland Cement

Portland cement shall conform to ASTM C 150, Type II for concrete used in concrete pipe, concrete pipe fittings, and manholes and type optional with the Contractor for cement used in concrete cradle, concrete encasement, and thrust blocking. Where aggregates are alkali reactive, as determined by Appendix XI of ASTM C 33, a cement containing less than 0.60 percent alkalies shall be used.

2.7.2 Portland Cement Concrete

Portland cement concrete shall conform to ASTM C 94, compressive strength of 4000 psi at 28 days, except for concrete cradle and encasement or concrete blocks for manholes. Concrete used for cradle and encasement shall have a compressive strength of 2500 psi minimum at 28 days. Concrete in place shall be protected from freezing and moisture loss for 7 days.

2.8 STRUCTURES

2.8.1 Precast Reinforced Concrete Manhole Sections

Precast reinforced concrete manhole sections shall conform to ASTM C 478, except that portland cement shall be as specified herein. Joints shall be

cement mortar, an approved mastic, rubber gaskets, a combination of these types; or the use of external preformed rubber joint seals and extruded rolls of rubber with mastic adhesive on one side.

2.8.2 Glass-Fiber-Reinforced Polyester Manholes

Glass-fiber-reinforced polyester manholes shall conform to ASTM D 3753.

PART 3 EXECUTION

3.1 INSTALLATION

3.1.1 Adjacent Facilities

3.1.1.1 Water Lines

Where the location of the sewer is not clearly defined by dimensions on the drawings, the sewer shall not be closer horizontally than 10 feet to a water-supply main or service line, except that where the bottom of the water pipe will be at least 12 inches above the top of the sewer pipe, the horizontal spacing may be a minimum of 6 feet. Where gravity-flow sewers cross above water lines, the sewer pipe for a distance of 10 feet on each side of the crossing shall be fully encased in concrete or shall be acceptable pressure pipe with no joint closer horizontally than 3 feet to the crossing. The thickness of the concrete encasement including that at the pipe joints shall be not less than 4 inches.

3.1.1.2 Omitted

3.1.1.3 Structural Foundations

Where sewer pipe is to be installed within 3 feet of an existing or proposed building or structural foundation such as a retaining wall, control tower footing, water tank footing, or any similar structure, the sewer pipe shall be sleeved as specified above. Contractor shall ensure there is no damage to these structures, and no settlement or movement of foundations or footing.

3.1.2 Pipe Laying

a. Pipe shall be protected during handling against impact shocks and free fall; the pipe interior shall be free of extraneous material.

b. Pipe laying shall proceed upgrade with the spigot ends of bell-and-spigot pipe and tongue ends of tongue-and-groove pipe pointing in the direction of the flow. Each pipe shall be laid accurately to the line and grade shown on the drawings. Pipe shall be laid and centered so that the sewer has a uniform invert. As the work progresses, the interior of the sewer shall be cleared of all superfluous materials.

c. Before making pipe joints, all surfaces of the portions of the pipe to be joined shall be clean and dry. Lubricants, primers, and adhesives shall be used as recommended by the pipe

manufacturer. The joints shall then be placed, fitted, joined, and adjusted to obtain the degree of water tightness required.

d. ABS composite pipe ends with exposed truss and filler material shall be coated with solvent weld material before making the joint to prevent water or air passage at the joint between the inner and outer wall of the pipe.

e. Installations of solvent weld joint pipe, using ABS or PVC pipe and fittings shall be in accordance with ASTM F 402. The Contractor shall ensure adequate trench ventilation and protection for workers installing the pipe.

3.1.2.1 Caulked Joints

The packing material shall be well packed into the annular space to prevent the entrance of lead into the pipe. The remainder of the space shall be filled with molten lead that is hot enough to show a rapid change in color when stirred. Scum shall be removed before pouring. The lead shall be caulked to form a tight joint without overstraining the bell and shall have a minimum depth of 1 inch after caulking.

3.1.2.2 Trenches

Trenches shall be kept free of water and as dry as possible during bedding, laying, and jointing and for as long a period as required. When work is not in progress, open ends of pipe and fittings shall be satisfactorily closed so that no trench water or other material will enter the pipe or fittings.

3.1.2.3 Backfill

As soon as possible after the joint is made, sufficient backfill material shall be placed along the pipe to prevent pipe movement off line or grade. Plastic pipe shall be completely covered to prevent damage from ultraviolet light.

3.1.2.4 Width of Trench

If the maximum width of the trench at the top of the pipe, as specified in Section 02315 EXCAVATION, FILLING, AND BACKFILLING, is exceeded for any reason other than by direction, the Contractor shall install, at no additional cost to the Government, concrete cradling, pipe encasement, or other bedding required to support the added load of the backfill.

3.1.2.5 Jointing

Joints between different pipe materials shall be made as specified, using approved jointing materials.

3.1.2.6 Handling and Storage

Pipe, fittings and joint material shall be handled and stored in accordance with the manufacturer's recommendations. Storage facilities for plastic

pipe, fittings, joint materials and solvents shall be classified and marked in accordance with NFPA 704, with classification as indicated in NFPA 49 and NFPA 325-1.

3.1.3 Leakage Tests

Lines shall be tested for leakage by low pressure air testing, infiltration tests or exfiltration tests, as appropriate. Low pressure air testing for vitrified clay pipes shall be as prescribed in ASTM C 828. Low pressure air testing for concrete pipes shall be as prescribed in ASTM C 828. Low pressure air testing for PVC pipe shall be as prescribed in UBPPA UNI-B-6. Low pressure air testing procedures for other pipe materials shall use the pressures and testing times prescribed in ASTM C 828 and ASTM C 924, after consultation with the pipe manufacturer. Prior to infiltration or exfiltration tests, the trench shall be backfilled up to at least the lower half of the pipe. If required, sufficient additional backfill shall be placed to prevent pipe movement during testing, leaving the joints uncovered to permit inspection. Visible leaks encountered shall be corrected regardless of leakage test results. When the water table is 2 feet or more above the top of the pipe at the upper end of the pipeline section to be tested, infiltration shall be measured using a suitable weir or other device acceptable to the Contracting Officer. When the Contracting Officer determines that infiltration cannot be properly tested, an exfiltration test shall be made by filling the line to be tested with water so that a head of at least 2 feet is provided above both the water table and the top of the pipe at the upper end of the pipeline to be tested. The filled line shall be allowed to stand until the pipe has reached its maximum absorption, but not less than 4 hours. After absorption, the head shall be re-established. The amount of water required to maintain this water level during a 2-hour test period shall be measured. Leakage as measured by either the infiltration test or exfiltration test shall not exceed 25 gal per inch diameter per mile of pipeline per day. When leakage exceeds the maximum amount specified, satisfactory correction shall be made and retesting accomplished. Testing, correction, and retesting shall be made at no additional cost to the Government.

3.1.4 Test for Deflection

When flexible pipe is used, a deflection test shall be made on the entire length of the installed pipeline not less than 30 days after the completion of all work including the leakage test, backfill, and placement of any fill, grading, paving, concrete, or superimposed loads. Deflection shall be determined by use of a deflection device or by use of a spherical, spheroidal, or elliptical ball, a cylinder, or circular sections fused to a common shaft. The ball, cylinder, or circular sections shall have a diameter, or minor diameter as applicable, of 92.5 percent of the inside diameter of the pipe, but 95 percent for RPMP and RTRP. A tolerance of plus 0.5 percent will be permitted. The ball, cylinder, or circular sections shall be of a homogeneous material throughout, shall have a density greater than 1.0 as related to water at 39.2 degrees F, and shall have a surface brinell hardness of not less than 150. The device shall be center bored and through bolted with a 1/4 inch minimum diameter steel shaft having a yield strength of 70,000 psi or more, with eyes at each end for attaching pulling cables. The eye shall be suitably backed with flange

or heavy washer; a pull exerted on the opposite end of the shaft shall produce compression throughout the remote end of the ball, cylinder or circular section. Circular sections shall be spaced so that the distance from the external faces of the front and back sections shall equal or exceed the diameter of the circular section. Failure of the ball, cylinder, or circular section to pass freely through a pipe run, either by being pulled through or by being flushed through with water, shall be cause for rejection of that run. When a deflection device is used for the test in lieu of the ball, cylinder, or circular sections described, such device shall be approved prior to use. The device shall be sensitive to 1.0 percent of the diameter of the pipe being measured and shall be accurate to 1.0 percent of the indicated dimension. Installed pipe showing deflections greater than 7.5 percent of the normal diameter of the pipe, or 5 percent for RTRP and RPMP, shall be retested by a run from the opposite direction. If the retest also fails, the suspect pipe shall be replaced at no cost to the Government.

3.2 CONCRETE CRADLE AND ENCASEMENT

The pipe shall be supported on a concrete cradle, or encased in concrete where indicated or directed.

3.3 INSTALLATION OF WYE BRANCHES

Wye branches shall be installed where sewer connections are indicated or where directed. Cutting into piping for connections shall not be done except in special approved cases. When the connecting pipe cannot be adequately supported on undisturbed earth or tamped backfill, the pipe shall be encased in concrete backfill or supported on a concrete cradle as directed. Concrete required because of conditions resulting from faulty construction methods or negligence by the Contractor shall be installed at no additional cost to the Government. The installation of wye branches in an existing sewer shall be made by a method which does not damage the integrity of the existing sewer. One acceptable method consists of removing one pipe section, breaking off the upper half of the bell of the next lower section and half of the running bell of wye section. After placing the new section, it shall be rotated so that the broken half of the bell will be at the bottom. The two joints shall then be made with joint packing and cement mortar.

3.4 MANHOLE DETAILS

3.4.1 General Requirements

Manholes shall be constructed of glass-fiber-reinforced polyester, prefabricated plastic, concrete, or precast concrete manhole sections. The invert channels shall be smooth and semicircular in shape conforming to the inside of the adjacent sewer section. Changes in direction of flow shall be made with a smooth curve of as large a radius as the size of the manhole will permit. Changes in size and grade of the channels shall be made gradually and evenly. The invert channels shall be formed directly in the concrete of the manhole base, or shall be built up with brick and mortar, or shall be half tile laid in concrete, or shall be constructed by laying full section sewer pipe through the manhole and breaking out the top half

after the surrounding concrete has hardened. Pipe connections shall be made to manhole using water stops, standard O-ring joints, special manhole coupling, or shall be made in accordance with the manufacturer's recommendation. The Contractor's proposed method of connection, list of materials selected, and specials required, shall be approved prior to installation. The floor of the manhole outside the channels shall be smooth and shall slope toward the channels not less than 1 inch per foot nor more than 2 inches per foot. Free drop inside the manholes shall not exceed 18 inches, measured from the invert of the inlet pipe to the top of the floor of the manhole outside the channels; drop manholes shall be constructed whenever the free drop would otherwise be greater than 1 foot 6 inches.

3.4.2 Steel Ladder Anchorage

Ladder shall be adequately anchored to the wall by means of steel inserts spaced not more than 6 feet apart vertically, and shall be installed to provide at least 6 inches of space between the wall and the rungs. The wall along the line of the ladder shall be vertical for its entire length.

3.4.3 Jointing, Plastering and Sealing

Mortar joints shall be completely filled and shall be smooth and free from surplus mortar on the inside of the manhole. Mortar and mastic joints between precast rings shall be full-bedded in jointing compound and shall be smoothed to a uniform surface on both the interior and exterior of the manhole. Installation of rubber gasket joints between precast rings shall be in accordance with the recommendations of the manufacturer. Precast rings may also be sealed by the use of extruded rolls of rubber with mastic adhesive on one side.

3.4.4 Setting of Frames and Covers

Unless otherwise indicated, tops of frames and covers shall be set flush with finished grade in paved areas or 2 inches higher than finished grade in unpaved areas. Frame and cover assemblies shall be sealed to manhole sections using external preformed rubber joint seals that meet the requirements of ASTM D 412 and ASTM D 624, or other methods specified in paragraph Jointing, Plastering and Sealing, unless otherwise specified.

3.4.5 External Preformed Rubber Joint Seals

External preformed rubber joint seals and extruded rolls of rubber with mastic adhesive shall meet the requirements of ASTM D 412 and ASTM C 972 to ensure conformance with paragraph Leakage Tests. The seal shall be multi-section with neoprene rubber top section and all lower sections made of Ethylene Propylene Di Monomer (EPDM) rubber with a minimum thickness of 60 mils. Each unit shall consist of a top and a bottom section and shall have mastic on the bottom of the bottom section and mastic on the top and bottom of the top section. The mastic shall be non-hardening butyl rubber sealant and shall seal to the cone/top slab of the manhole/catch basin and over the lip of the casting. One unit shall seal a casting and up to six, 2 inch adjusting rings. The bottom section shall be 12 inches in height. A 6 inch high top section will cover up to two, 2 inchadjusting rings. A

12 inch high bottom section will cover up to six, 2 inch adjusting rings. Extension sections shall cover up to two more adjusting rings. Each extension shall overlap the bottom section by 2 inches and shall be overlapped by the top section by 2 inches.

3.5 CONNECTING TO EXISTING MANHOLES

Pipe connections to existing manholes shall be made so that finish work will conform as nearly as practicable to the applicable requirements specified for new manholes, including all necessary concrete work, cutting, and shaping. The connection shall be centered on the manhole. Holes for the new pipe shall be of sufficient diameter to allow packing cement mortar around the entire periphery of the pipe but no larger than 1.5 times the diameter of the pipe. Cutting the manhole shall be done in a manner that will cause the least damage to the walls.

3.6 BUILDING CONNECTIONS

Building connections shall include the lines to and connection with the building waste drainage piping at a point approximately 5 feet outside the building, unless otherwise indicated. Where building drain piping is not installed, the Contractor shall terminate the building connections approximately 5 feet from the site of the building at a point and in a manner designated.

3.7 CLEANOUTS AND OTHER APPURTENANCES

Cleanouts and other appurtenances shall be installed where shown on the drawings or as directed by the Contracting Officer, and shall conform to the detail of the drawings.

-- End of Section --

SECTION TABLE OF CONTENTS

DIVISION 02 - SITE WORK

SECTION 02547

BITUMINOUS PAVEMENT WITH BASE COURSE

01/98

PART 1 GENERAL

1.1 REFERENCES
1.2 DESCRIPTION OF WORK
1.3 DESCRIPTION OF TERMS
1.4 APPLICABLE SPECIFICATIONS
1.5 OMITTED
1.6 OMITTED
1.7 SUBMITTALS
1.8 SAFETY PRECAUTIONS
1.9 EQUIPMENT, TOOLS, AND MACHINES
1.9.1 Bituminous Distributors
1.9.2 Single-Pass, Surface-Treatment Machines
1.9.3 Heating Equipment for Storage Tanks
1.9.4 Power Rollers
1.9.5 Mechanical Spreaders
1.9.6 Brooms and Blowers
1.9.7 Scales
1.9.8 Weighhouse
1.10 SAMPLING AND TESTING
1.10.1 Wear Test
1.10.2 Soundness Test
1.11 WEATHER LIMITATIONS

PART 2 PRODUCTS

2.1 MATERIALS
2.1.1 Aggregate Base Coat
2.1.2 Primer Coat
2.1.3 Tack Coat
2.1.4 Bituminous Plant Mix Pavement
2.1.5 Asphalt Cement for Plant Mix
2.1.6 Bituminous Concrete Binder Course
2.1.7 Bituminous Concrete Surface Course
2.1.8 Bituminous Materials

PART 3 EXECUTION

3.1 ESTABLISHMENT OF JOB-MIX FORMULA, INCLUDING SAMPLING AND TESTING
3.1.1 Establishment
3.1.2 Sampling and Testing

-- End of Section Table of Contents --

SAVH-02547

SECTION 02547

BITUMINOUS PAVEMENT WITH BASE COURSE
01/98

PART 1 GENERAL

1.1 REFERENCES

The publications listed below form a part of this specification to the extent referenced. The publications are referred to in the text by basic designation only.

AMERICAN SOCIETY FOR TESTING AND MATERIALS (ASTM)

ASTM C 88	(1990) Soundness of Aggregates by Use of Sodium Sulfate or Magnesium Sulfate
ASTM C 131	(1989) Resistance to Degradation of Small-Size Coarse Aggregate by Abrasion and Impact in the Los Angeles Machine
ASTM D 75	(1987; R 1992) Sampling Aggregates
ASTM D 140	(1993) Sampling Bituminous Materials

1.2 DESCRIPTION OF WORK

The work covered by this section consists of the construction of a bituminous pavement consisting of a base course, bituminous prime and tack coats and a bituminous surface course and/or courses on a properly prepared subgrade and in conformity with the lines, grades, thicknesses and typical section and/or sections shown on the plans. The construction of the bituminous pavement shall conform to the requirements of the "North Carolina Department of Transportation Standard Specifications for Roads and Structures," 1990 Edition, except for the modifications or revisions specified herein.

1.3 DESCRIPTION OF TERMS

Wherever in the North Carolina Department of Transportation (NCDOT) Standard Specifications for Roads and Structures, hereinafter referred to as the "Standard Specifications," the following terms are used, the intent shall be as follows:

"State" ---------- U.S. Government

"Commission" ---------- Corps of Engineers, Party of the First Part

"Engineer" ---------- Contracting Officer, Corps of Engineers

1.4 APPLICABLE SPECIFICATIONS

The following sections of NCDOT Standard Specifications form a part of this section of the specifications, except as hereinafter modified:

Section	Section Title
101	Definition of Terms
520	Aggregate Base Course, (Type - A Aggregate)
600	Prime Coat
605	Tack Coat
610	Bituminous Plant Mix Pavements - General
620	Asphalt Cement for Plant Mix
640	Bituminous Concrete Binder Course, Type H
645	Bituminous Concrete Surface Course, Type I-1
1020	Bituminous Materials

All sections referenced in the designated sections above shall also form a part of these Technical Provisions.

1.5 OMITTED

1.6 OMITTED

1.7 SUBMITTALS

Government approval is required for submittals with a "G" designation; submittals not having a "G" designation are for information only. When used, a designation following the "G" designation identifies the office that will review the submittal for the Government. The following shall be submitted in accordance with Section 01330 SUBMITTAL PROCEDURES:

SD-04 Samples

Pavement Samples and Plant Mixtures

Provide pavement samples and plant mixture samples as described in paragraph 3.2.2 and 3.5

SD-06 Test Reports

Tests; G,RE

Copies of pavement job mix formula and test data results, within 24 hours after completion of each test.

SD-07 Certificates

Waybills and Delivery Tickets

Copies of waybills and delivery tickets shall be submitted during progress of the work.

1.8 SAFETY PRECAUTIONS

No smoking, or open flames shall be permitted within 25 feetof heating, distributing, or transferring operations of bituminous materials other than bituminous emulsions. When tar is used, a full-face, organic, vapor-type respirator and protective creams shall be used by personnel exposed to fumes. Protective creams shall not substitute for cover clothing.

1.9 EQUIPMENT, TOOLS, AND MACHINES

1.9.1 Bituminous Distributors

The distributors shall have pneumatic tires of such width and number that the load produced on the base surface does not exceed 650 pounds per inch of tire width. Distributors shall be designed and equipped to distribute bituminous material uniformly at even heat on various widths of surface at readily determined and controlled rates ranging from 0.05 to 2.00 gallons per square yard, with a pressure range of 25 to 75 psi. The allowable variation from any specified rate shall not exceed 5 percent. Distributor equipment shall include a separate power unit for the bitumen pump, full-circulation spray bars, tachometer, pressure gauges, volume-measuring devices, a thermometer for reading the temperature of tank contents, and a hose attachment suitable for applying bituminous material to areas not accessible with distributor spray bar. The distributor shall be equipped for circulation and agitation of bituminous material during the heating process.

1.9.2 Single-Pass, Surface-Treatment Machines

The machines shall be capable of spraying bituminous material and spreading aggregate in one pass. Bituminous spraying equipment shall conform to the requirements given above for a bituminous distributor. The machine shall be capable of spreading aggregates at controlled amounts per square yard as specified. In addition, the single-pass, surface-treatment machine shall be capable of placing a surface treatment adjacent to an existing surface treatment, forming a joint of the same thickness and uniformity as other portions of the surface treatment. Ridges or blank spaces will not be permitted. Joints in the second application shall be formed at least 1 foot from those formed in the first application.

1.9.3 Heating Equipment for Storage Tanks

The equipment shall consist of coils and equipment for producing steam or hot oil and be designed to prevent the introduction of steam or hot oil into the material. An armored thermometer with a range of 100 to 400 degrees F shall be affixed to the tank so the temperature of the bituminous material may be determined at all times.

1.9.4 Power Rollers

Power rollers shall be steel-wheeled or pneumatic-tired type, conforming to

the following requirements:

a. Steel-wheeled rollers shall have at least one steel drum and weigh a minimum of 5 tons. Steel wheels of the rollers shall be equipped with adjustable scrapers.

b. Pneumatic-tired rollers shall be self-propelled and have wheels mounted on two axles in such manner that the rear tires will not follow in the tracks of the forward group. Tires shall be uniformly inflated to not less than 60 psi nor more than 80 psi pressure. The pneumatic-tired rollers shall be equipped with boxes or platforms for ballast loading and shall be loaded so that the tire print width of each wheel is not less than the clear distance between tire prints.

1.9.5 Mechanical Spreaders

The spreaders shall be adjustable and capable of spreading aggregate at controlled amounts per square yard, as specified.

1.9.6 Brooms and Blowers

The machines shall be of the power type, capable of cleaning surfaces to be treated.

1.9.7 Scales

The scales shall be standard truck scales of the beam type equipped with a weight-recording device. The scales shall be sufficient in size and capacity to accommodate the trucks used in hauling aggregates. The scales shall be tested and approved by an inspector of the State Inspection Bureau charged with scale inspection within the state in which the project is located. If an official of the inspection bureau is not available, the scales shall be tested in accordance with state specifications by the Contractor in the presence of the Contracting Officer. The Contractor shall have the necessary number of standard weights on hand at all times for testing the scales.

1.9.8 Weighhouse

The house shall be weatherproof and shall be constructed in a manner to afford adequate protection for the indicating and recording devices of the scales.

1.10 SAMPLING AND TESTING

The sampling and testing shall be the responsibility of the Contractor. Sampling and testing shall be performed by an approved commercial testing laboratory, or by the Contractor, subject to approval. Sampling shall be in accordance with ASTM D 75 for aggregates and ASTM D 140 for bituminous material, unless otherwise directed. Tests shall be performed in sufficient number to insure that materials meet specified requirements.

1.10.1 Wear Test

The wear test shall be performed in accordance with ASTM C 131 to ensure that aggregates have a percentage of wear not exceeding 40 percent after 500 revolutions. One test shall be performed for every 50 cubic yards of aggregates in stockpiles or at the source.

1.10.2 Soundness Test

The soundness test shall be performed as specified by ASTM C 88 to ensure that aggregates have a weight loss not greater than 10 percent when subjected to five cycles of the magnesium sulfate test. One test shall be performed for every 500 cubic yards of aggregates in stockpiles or at the source.

1.11 WEATHER LIMITATIONS

Bituminous surface treatment shall be applied only when the existing surface or base course is dry. Bituminous surface treatment shall not be applied when either the atmospheric temperature, in the shade, is below 50 degrees F or the pavement surface to be treated is below 70 degrees F unless otherwise directed.

PART 2 PRODUCTS

2.1 MATERIALS

Mineral aggregate and bituminous material of the following types, gradations, grades, and consistencies that meet the requirements of stripping, wear, and soundness tests as specified by NCDOT and in paragraph SAMPLING AND TESTING shall be used.

2.1.1 Aggregate Base Coat

Aggregate base course, Type A, per NCDOT Sec 520.

2.1.2 Primer Coat

Primer coat per NCDOT Sec 600.

2.1.3 Tack Coat

Tack coat per NCDOT Sec 605.

2.1.4 Bituminous Plant Mix Pavement

Bituminous plant mix pavement per NCDOT Sec 610.

2.1.5 Asphalt Cement for Plant Mix

Asphalt cement for plant mix per NCDOT Sec 620.

2.1.6 Bituminous Concrete Binder Course

Bituminous concrete binder course , Type H, per NCDOT 640.

2.1.7 Bituminous Concrete Surface Course

Bituminous concrete surface course, Type I-1, per NCDOT Sec 645.

2.1.8 Bituminous Materials

Bituminous materials per NCDOT Section 1020.

PART 3 EXECUTION

3.1 ESTABLISHMENT OF JOB-MIX FORMULA, INCLUDING SAMPLING AND TESTING

The bituminous plant mix surface course shall be applied in accordance with the Standard Specifications using asphaltic concrete "I-1." If a bituminous concrete binder course is specified, it shall be Type "H."

3.1.1 Establishment

When the estimated quantity of bituminous pavement mixture exceeds 300 tons but is less than 1,000 tons, the job-mix formula together with all pertinent laboratory and field test data shall be furnished the Contracting Officer for review and approval at least 45 days prior to beginning paving operations. Simultaneously, the same job-mix formula and data together with sufficient sized samples and source of materials shall be furnished the Director, U.S. Army Corps of Engineers, South Atlantic Division Testing Laboratory at 611 South Cobb Drive, Marietta, Georgia 30060 for review and check testing by the Government.

3.1.2 Sampling and Testing

The above mentioned samples and test data concerning the satisfactoriness of all materials in the mixture to be used in this work, including the Marshall test properties, shall be furnished for approval by the Contracting Officer as specified above, except for small projects where the plant mixture is 300 tons and less as specified below. The Division Testing Laboratory will notify the Contracting Officer of the satisfactoriness of the proposed mix design prior to the Contractor beginning placement of pavement. The Contractor shall perform the necessary density tests of the compacted base course and the compacted bituminous surface course as directed at no additional cost to the Government.

-- End of Section --

SECTION TABLE OF CONTENTS

DIVISION 02 - SITE WORK

SECTION 02621

FOUNDATION DRAINAGE SYSTEM

01/98

PART 1 GENERAL

1.1 REFERENCES
1.2 SUBMITTALS
1.3 DELIVERY, STORAGE AND HANDLING

PART 2 PRODUCTS

2.1 MATERIALS
2.1.1 Omitted
2.1.2 Omitted
2.1.3 Omitted
2.1.4 Omitted
2.1.5 Omitted
2.1.6 Omitted
2.1.7 Omitted
2.1.8 Omitted
2.1.9 Omitted
2.1.10 Omitted
2.1.11 Omitted
2.1.12 Omitted
2.1.13 Plastic Pipe
2.1.13.1 Corrugated Polyethylene (PE) Drainage Pipe
2.1.13.2 Omitted
2.1.13.3 Polyvinyl Chloride (PVC) Pipe
2.1.13.4 Circular Perforations in Plastic Pipe
2.1.14 Fittings
2.1.15 Cleanouts and Piping Through Walls
2.1.16 Omitted
2.1.17 Bedding and Pervious Backfill for Foundation Drains

PART 3 EXECUTION

3.1 GENERAL REQUIREMENTS
3.1.1 Extent
3.1.2 Omitted
3.1.3 Drainage Lines
3.2 INSTALLATION
3.2.1 Trenching and Excavation
3.2.2 Bedding
3.2.3 Pipe Laying
3.2.4 Jointing
3.2.4.1 Perforated Pipes

3.2.4.2 Omitted
3.2.4.3 Omitted
3.2.4.4 Omitted
3.2.4.5 Omitted
3.2.4.6 Omitted
3.2.4.7 Omitted
3.2.4.8 Omitted
3.2.4.9 PVC Pipe
3.2.4.10 Corrugated Polyethylene
3.2.5 Omitted
3.2.6 Backfilling

-- End of Section Table of Contents --

CEGS-02621 (January 1998)
GUIDE SPECIFICATION FOR CONSTRUCTION

Includes changes through Notice 1 (August 2000)

SECTION 02621

FOUNDATION DRAINAGE SYSTEM
01/98

PART 1 GENERAL

1.1 REFERENCES

The publications listed below form a part of this specification to the extent referenced. The publications are referred to in the text by basic designation only.

AMERICAN SOCIETY FOR TESTING AND MATERIALS (ASTM)

ASTM D 3034	(1998) Type PSM Poly(Vinyl Chloride) (PVC) Sewer Pipe and Fittings
ASTM D 3212	(1996a) Joints for Drain and Sewer Plastic Pipes Using Flexible Elastomeric Seals
ASTM F 405	(1997) Corrugated Polyethylene (PE) Tubing and Fittings
ASTM F 667	(1997) Large Diameter Corrugated Polyethylene Tubing and Fittings
ASTM F 758	(1995) Smooth-Wall Poly(Vinyl Chloride) (PVC) Plastic Underdrain Systems for Highway, Airport, and Similar Drainage
ASTM F 949	(1999) Poly(Vinyl Chloride) (PVC) Corrugated Sewer Pipe With a Smooth Interior and Fittings

1.2 SUBMITTALS

Government approval is required for submittals with a "G" designation; submittals not having a "G" designation are for information only. When used, a designation following the "G" designation identifies the office that will review the submittal for the Government. The following shall be submitted in accordance with Section 01330 SUBMITTAL PROCEDURES:

SD-04 Samples

Materials.

Two randomly selected samples of each type of pipe and fitting, prior to delivery of materials to the site.

SD-07 Certificates

Materials.

Certifications from the manufacturers attesting that materials meet specification requirements.

1.3 DELIVERY, STORAGE AND HANDLING

Materials placed in storage shall be stored with protection from the weather, humidity and temperature variations, dirt and dust, or other contaminants. Plastic pipe shall not be exposed to direct sunlight for more than 6 months from time of manufacturer to installation.

PART 2 PRODUCTS

2.1 MATERIALS

Pipe for foundation drainage system shall be of the type and size indicated. Appropriate transitions, adapters, or joint details shall be used where pipes of different types or materials are connected.

2.1.1 Omitted
2.1.2 Omitted
2.1.3 Omitted
2.1.4 Omitted
2.1.5 Omitted
2.1.6 Omitted
2.1.7 Omitted
2.1.8 Omitted
2.1.9 Omitted
2.1.10 Omitted
2.1.11 Omitted
2.1.12 Omitted

2.1.13 Plastic Pipe

Plastic pipe shall contain ultraviolet inhibitor to provide protection from exposure to direct sunlight.

2.1.13.1 Corrugated Polyethylene (PE) Drainage Pipe

The Contractor shall furnish ASTM F 405 heavy duty for pipe 3 to 6 inches in diameter inclusive. Fittings shall be pipe manufacturer's standard type and shall conform to the indicated specification.

2.1.13.2 Omitted

2.1.13.3 Polyvinyl Chloride (PVC) Pipe

ASTM F 758, Type PS 46, ASTM D 3034, or ASTM F 949 with a minimum pipe stiffness of 46 psi.

2.1.13.4 Circular Perforations in Plastic Pipe

Circular holes shall be cleanly cut, not more than 5/16 inch or less than 3/16 inch in diameter, and arranged in rows parallel to the longitudinal axis of the pipe. Perforations shall be approximately 3 inches apart, center-to-center, along rows. The rows shall be approximately 1-1/2 inches apart and arranged in a staggered pattern so that all perforations lie at the midpoint between perforations in adjacent rows. The rows shall be spaced over not more than 155 degrees of circumference. The spigot or tongue end of the pipe shall not be perforated for a length equal to the depth of the socket and perforations shall continue at uniform spacing over the entire length of the pipe. Manufacturer's standard perforated pipe which essentially meets these requirements may be used with prior approval of the Contracting Officer.

2.1.14 Fittings

Fittings shall be of compatible materials for pipe, of corresponding weight and quality, and as specified herein.

2.1.15 Cleanouts and Piping Through Walls

Cleanout pipe and fittings and piping through walls and footings shall be cast-iron soil pipe. Each cleanout shall have a brass ferrule and a cast-brass screw-jointed plug with socket or raised head for wrench.

2.1.16 Omitted

2.1.17 Bedding and Pervious Backfill for Foundation Drains

Bedding and drainage backfill shall be in accordance with Section 02315 EXCAVATION, FILLING, AND BACKFILLING FOR BUILDINGS.

PART 3 EXECUTION

3.1 GENERAL REQUIREMENTS

3.1.1 Extent

Foundation drainage shall be furnished and installed as a complete system as shown.

3.1.2 Omitted

3.1.3 Drainage Lines

Drainage lines shall be constructed of perforated pipe.

3.2 INSTALLATION

3.2.1 Trenching and Excavation

Required trenching and excavation shall be in accordance with Section 02315 EXCAVATION, FILLING, AND BACKFILLING FOR BUILDINGS. Trenches shall be kept dry during installation of drainage system. Changes in direction of drain lines shall be made with 1/8 bends. Wye fittings shall be used at intersections.

3.2.2 Bedding

Graded bedding, minimum 6 inches in depth, shall be placed in the bottom of trench for its full width and length and compacted as specified prior to laying of foundation drain pipe. Each section shall rest firmly upon the bedding, through the entire length, with recesses formed for bell joints. Except for recesses for bell joints, the bedding shall fully support the lower quadrant of the pipe.

3.2.3 Pipe Laying

Drain lines shall be laid to true grades and alignment with a continuous fall in the direction of flow. Bells of pipe sections shall face upgrade. Interior of pipe shall be cleaned thoroughly before being laid. When drain lines are left open for connection to discharge lines, the open ends shall be temporarily closed and the location marked with wooden stakes. Perforated pipe shall be laid with perforations facing down. Any length that has had its grade or joints disturbed shall be removed and relaid at no additional cost to the Government. Perforated corrugated polyethylene drainage tubing and plastic piping shall be installed in accordance with manufacturer's specifications and as specified herein. Tubing and piping with physical imperfections shall not be installed.

3.2.4 Jointing

3.2.4.1 Perforated Pipes

Perforated types of drain pipes shall be laid with closed joints.

3.2.4.2 Omitted
3.2.4.3 Omitted
3.2.4.4 Omitted
3.2.4.5 Omitted
3.2.4.6 Omitted
3.2.4.7 Omitted
3.2.4.8 Omitted

3.2.4.9 PVC Pipe

PVC pipe joints shall be in accordance with ASTM D 3034, ASTM D 3212, or ASTM F 949.

3.2.4.10 Corrugated Polyethylene

Corrugated polyethylene (PE) pipe joints shall be in accordance with ASTM F 405 or ASTM F 667.

3.2.5 Omitted

3.2.6 Backfilling

After joints and connections have been inspected and approved, the specified drainage backfill material shall be placed for the full width of the trench and full width between pipe and adjacent walls and 12 inches above the top of the pipe. The backfill shall be placed preventing displacement of or injury to the pipe or tile. Backfill shall be compacted as specified in Section 02315 EXCAVATION, FILLING AND BACKFILLING FOR BUILDINGS.

-- End of Section --

SECTION TABLE OF CONTENTS

DIVISION 02 - SITE WORK

SECTION 02630

STORM-DRAINAGE SYSTEM

03/00

PART 1 GENERAL

1.1 REFERENCES
1.2 OMITTED
1.3 SUBMITTALS
1.4 DELIVERY, STORAGE, AND HANDLING
1.4.1 Delivery and Storage
1.4.2 Handling

PART 2 PRODUCTS

2.1 PIPE FOR CULVERTS AND STORM DRAINS
2.1.1 Concrete Pipe
2.1.1.1 Reinforced Arch Culvert and Storm Drainpipe
2.1.1.2 Reinforced Elliptical Culvert and Storm Drainpipe
2.1.1.3 Nonreinforced Pipe
2.1.1.4 Cast-In-Place Nonreinforced Conduit
2.1.2 Omitted
2.1.3 Omitted
2.1.4 Omitted
2.1.5 Omitted
2.1.6 Omitted
2.1.7 Ductile Iron Culvert Pipe
2.1.8 PVC Pipe
2.1.8.1 Type PSM PVC Pipe
2.1.8.2 Profile PVC Pipe
2.1.8.3 Smooth Wall PVC Pipe
2.1.8.4 Corrugated PVC Pipe
2.2 DRAINAGE STRUCTURES
2.2.1 Flared End Sections
2.3 MISCELLANEOUS MATERIALS
2.3.1 Concrete
2.3.2 Mortar
2.3.3 Precast Concrete Segmental Blocks
2.3.4 Brick
2.3.5 Precast Reinforced Concrete Manholes
2.3.6 Omitted
2.3.7 Frame and Cover for Gratings
2.3.8 Joints
2.3.8.1 Flexible Watertight Joints
2.3.8.2 External Sealing Bands
2.3.8.3 Flexible Watertight, Gasketed Joints
2.3.8.4 PVC Plastic Pipes

2.3.8.5 Omitted
2.3.8.6 Omitted
2.3.8.7 Omitted
2.3.8.8 Ductile Iron Pipe
2.4 STEEL LADDER
2.5 DOWNSPOUT BOOTS
2.6 RESILIENT CONNECTORS
2.7 HYDROSTATIC TEST ON WATERTIGHT JOINTS
2.7.1 Concrete, Clay, PVC and PE Pipe
2.7.2 Corrugated Steel and Aluminum Pipe

PART 3 EXECUTION

3.1 EXCAVATION FOR PIPE CULVERTS, STORM DRAINS, AND DRAINAGE STRUCTURES
3.2 BEDDING
3.2.1 Concrete Pipe Requirements
3.2.2 Omitted
3.2.3 Omitted
3.2.4 Ductile Iron Pipe
3.2.5 Plastic Pipe
3.3 PLACING PIPE
3.3.1 Concrete, PVC, Ribbed PVC and Ductile Iron Pipe
3.3.2 Elliptical and Elliptical Reinforced Concrete Pipe
3.3.3 Omitted
3.3.4 Omitted
3.4 JOINTING
3.4.1 Concrete Pipe
3.4.1.1 Cement-Mortar Bell-and-Spigot Joint
3.4.1.2 Cement-Mortar Oakum Joint for Bell-and-Spigot Pipe
3.4.1.3 Cement-Mortar Diaper Joint for Bell-and-Spigot Pipe
3.4.1.4 Cement-Mortar Tongue-and-Groove Joint
3.4.1.5 Cement-Mortar Diaper Joint for Tongue-and-Groove Pipe
3.4.1.6 Plastic Sealing Compound Joints for Tongue-and-Grooved Pipe
3.4.1.7 Flexible Watertight Joints
3.4.1.8 External Sealing Band Joint for Noncircular Pipe
3.5 DRAINAGE STRUCTURES
3.5.1 Manholes and Inlets
3.5.2 Walls and Headwalls
3.6 STEEL LADDER INSTALLATION
3.7 BACKFILLING
3.7.1 Backfilling Pipe in Trenches
3.7.2 Backfilling Pipe in Fill Sections
3.7.3 Movement of Construction Machinery
3.7.4 Compaction
3.7.4.1 General Requirements
3.7.4.2 Minimum Density
3.7.5 Determination of Density
3.8 PIPELINE TESTING

-- End of Section Table of Contents --

CEGS-02630 (March 2000)

SECTION 02630

STORM-DRAINAGE SYSTEM
03/00

PART 1 GENERAL

1.1 REFERENCES

The publications listed below form a part of this specification to the extent referenced. The publications are referred to in the text by basic designation only.

ACI INTERNATIONAL (ACI)

ACI 346/346R	(1990) Standard Specification for Cast-in-Place Nonreinforced Concrete Pipe and Recommendations

AMERICAN ASSOCIATION OF STATE HIGHWAY AND TRANSPORTATION OFFICIALS (AASHTO)

AASHTO HB-16	(1996) Standard Specifications for Highway Bridges
AASHTO M 198	(1998) Joints for Circular Concrete Sewer and Culvert Pipe Using Flexible Watertight Gaskets

AMERICAN SOCIETY FOR TESTING AND MATERIALS (ASTM)

ASTM A 536	(1999el) Ductile Iron Castings
ASTM A 716	(1995) Ductile Iron Culvert Pipe
ASTM A 929/A 929M	(1997) Steel Sheet, Metallic-Coated by the Hot-Dip Process for Corrugated Steel Pipe
ASTM C 32	(1999el) Sewer and Manhole Brick (Made from Clay or Shale)
ASTM C 55	(1999) Concrete Brick
ASTM C 62	(1997a) Building Brick (Solid Masonry Units Made from Clay or Shale)
ASTM C 139	(1999) Concrete Masonry Units for Construction of Catch Basins and Manholes

ASTM C 231	(1997el) Air Content of Freshly Mixed Concrete by the Pressure Method
ASTM C 270	(1997) Mortar for Unit Masonry
ASTM C 425	(1998b) Compression Joints for Vitrified Clay Pipe and Fittings
ASTM C 443	(1998) Joints for Circular Concrete Sewer and Culvert Pipe, Using Rubber Gaskets
ASTM C 655	(1995a) Reinforced Concrete D-Load Culvert, Storm Drain, and Sewer Pipe
ASTM C 828	(1998) Low-Pressure Air Test of Vitrified Clay Pipe Lines
ASTM C 923	(1998) Resilient Connectors Between Reinforced Concrete Manhole Structures, Pipes and Materials
ASTM D 1056	(1998) Flexible Cellular Materials - Sponge or Expanded Rubber
ASTM D 1171	(1994) Rubber Deterioration - Surface Ozone Cracking Outdoors or Chamber (Triangular Specimens)
ASTM D 1556	(1990; R 1996) Density and Unit Weight of Soil in Place by the Sand-Cone Method
ASTM D 1557	(1998) Laboratory Compaction Characteristics of Soil Using Modified Effort (56,000 ft-lbf/cu. ft. (2,700 kN-m/cu.m.))
ASTM D 1751	(1999) Preformed Expansion Joint Filler for Concrete Paving and Structural Construction (Nonextruding and Resilient Bituminous Types)
ASTM D 1752	(1984; R 1996el) Preformed Sponge Rubber and Cork Expansion Joint Fillers for Concrete Paving and Structural Construction
ASTM D 1784	(1999a) Rigid Poly(Vinyl Chloride) (PVC) Compounds and Chlorinated Poly(Vinyl Chloride) (CPVC) Compounds
ASTM D 2216	(1992) Laboratory Determination of Water (Moisture) Content of Soil, and Rock
ASTM D 2321	(1989; R 1995) Underground Installation of Thermoplastic Pipe for Sewers and Other

	Gravity-Flow Applications
ASTM D 3034	(1998) Type PSM Poly(Vinyl Chloride) (PVC) Sewer Pipe and Fittings
ASTM D 3212	(1996a) Joints for Drain and Sewer Plastic Pipes Using Flexible Elastomeric Seals
ASTM F 679	(1995) Poly(Vinyl Chloride) (PVC) Large-Diameter Plastic Gravity Sewer Pipe and Fittings
ASTM F 794	(1999) Poly(Vinyl Chloride) (PVC) Profile Gravity Sewer Pipe and Fittings Based on Controlled Inside Diameter
ASTM F 949	(1999) Poly(Vinyl Chloride) (PVC) Corrugated Sewer Pipe with a Smooth Interior and Fittings
ASTM F 1417	(1992; R 1998) Installation Acceptance of Plastic Gravity Sewer Lines Using Low-Pressure Air

1.2 OMITTED

1.3 SUBMITTALS

Government approval is required for submittals with a "G" designation; submittals not having a "G" designation are for information only. When used, a designation following the "G" designation identifies the office that will review the submittal for the Government. The following shall be submitted in accordance with Section 01330 SUBMITTAL PROCEDURES:

SD-03 Product Data

Placing Pipe

Printed copies of the manufacturer's recommendations for installation procedures of the material being placed, prior to installation.

SD-07 Certificates

Pipeline Testing
Hydrostatic Test on Watertight Joints
Frame and Cover for Gratings

Certified copies of test reports demonstrating conformance to applicable pipe specifications, before pipe is installed. Certification on the ability of frame and cover or gratings to carry the imposed live load.

1.4 DELIVERY, STORAGE, AND HANDLING

1.4.1 Delivery and Storage

Materials delivered to site shall be inspected for damage, unloaded, and stored with a minimum of handling. Materials shall not be stored directly on the ground. The inside of pipes and fittings shall be kept free of dirt and debris. Before, during, and after installation, plastic pipe and fittings shall be protected from any environment that would result in damage or deterioration to the material. The Contractor shall have a copy of the manufacturer's instructions available at the construction site at all times and shall follow these instructions unless directed otherwise by the Contracting Officer. Solvents, solvent compounds, lubricants, elastomeric gaskets, and any similar materials required to install plastic pipe shall be stored in accordance with the manufacturer's recommendations and shall be discarded if the storage period exceeds the recommended shelf life. Solvents in use shall be discarded when the recommended pot life is exceeded.

1.4.2 Handling

Materials shall be handled in a manner that ensures delivery to the trench in sound, undamaged condition. Pipe shall be carried to the trench, not dragged.

PART 2 PRODUCTS

2.1 PIPE FOR CULVERTS AND STORM DRAINS

Pipe for culverts and storm drains shall be of the sizes indicated and shall conform to the requirements specified.

2.1.1 Concrete Pipe

ASTM C 76, Class III or IV, or ASTM C 655, equivalent strength D-Load.

2.1.1.1 Reinforced Arch Culvert and Storm Drainpipe

ASTM C 506, Class A-II.

2.1.1.2 Reinforced Elliptical Culvert and Storm Drainpipe

ASTM C 507. Horizontal elliptical pipe shall be Class HE-II. Vertical elliptical pipe shall be Class VE-II.

2.1.1.3 Nonreinforced Pipe

ASTM C 14, Class 2.

2.1.1.4 Cast-In-Place Nonreinforced Conduit

ACI 346/346R, except that testing shall be the responsibility of and at the expense of the Contractor. In the case of other conflicts between ACI 346/346R and project specifications, requirements of ACI 346/346R shall govern.

2.1.2 Omitted

2.1.3 Omitted
2.1.4 Omitted
2.1.5 Omitted
2.1.6 Omitted

2.1.7 Ductile Iron Culvert Pipe

ASTM A 716.

2.1.8 PVC Pipe

The pipe manufacturer's resin certification, indicating the cell classification of PVC used to manufacture the pipe, shall be submitted prior to installation of the pipe.

2.1.8.1 Type PSM PVC Pipe

ASTM D 3034, Type PSM, maximum SDR 35, produced from PVC certified by the compounder as meeting the requirements of ASTM D 1784, minimum cell class 12454-B.

2.1.8.2 Profile PVC Pipe

ASTM F 794, Series 46, produced from PVC certified by the compounder as meeting the requirements of ASTM D 1784, minimum cell class 12454-B.

2.1.8.3 Smooth Wall PVC Pipe

ASTM F 679 produced from PVC certified by the compounder as meeting the requirements of ASTM D 1784, minimum cell class 12454-B.

2.1.8.4 Corrugated PVC Pipe

ASTM F 949 produced from PVC certified by the compounder as meeting the requirements of ASTM D 1784, minimum cell class 12454-B.

2.2 DRAINAGE STRUCTURES

2.2.1 Flared End Sections

Sections shall be of a standard design fabricated from zinc coated steel sheets meeting requirements of ASTM A 929/A 929M.

2.3 MISCELLANEOUS MATERIALS

2.3.1 Concrete

Unless otherwise specified, concrete and reinforced concrete shall conform to the requirements for 3000 psi concrete under Section 03300 CAST-IN-PLACE STRUCTURAL CONCRETE. The concrete mixture shall have air content by volume of concrete, based on measurements made immediately after discharge from

the mixer, of 5 to 7 percent when maximum size of coarse aggregate exceeds 1-1/2 inches. Air content shall be determined in accordance with ASTM C 231. The concrete covering over steel reinforcing shall not be less than 1 inch thick for covers and not less than 1-1/2 inches thick for walls and flooring. Concrete covering deposited directly against the ground shall have a thickness of at least 3 inches between steel and ground. Expansion-joint filler material shall conform to ASTM D 1751, or ASTM D 1752, or shall be resin-impregnated fiberboard conforming to the physical requirements of ASTM D 1752.

2.3.2 Mortar

Mortar for pipe joints, connections to other drainage structures, and brick or block construction shall conform to ASTM C 270, Type M, except that the maximum placement time shall be 1 hour. The quantity of water in the mixture shall be sufficient to produce a stiff workable mortar but in no case shall exceed 1.0 gallons of water per sack of cement. Water shall be clean and free of harmful acids, alkalies, and organic impurities. The mortar shall be used within 30 minutes after the ingredients are mixed with water. The inside of the joint shall be wiped clean and finished smooth. The mortar head on the outside shall be protected from air and sun with a proper covering until satisfactorily cured.

2.3.3 Precast Concrete Segmental Blocks

Precast concrete segmental block shall conform to ASTM C 139, not more than 8 inches thick, not less than 8 inches long, and of such shape that joints can be sealed effectively and bonded with cement mortar.

2.3.4 Brick

Brick shall conform to ASTM C 62, Grade SW; ASTM C 55, Grade S-I or S-II; or ASTM C 32, Grade MS. Mortar for jointing and plastering shall consist of one part portland cement and two parts fine sand. Lime may be added to the mortar in a quantity not more than 25 percent of the volume of cement. The joints shall be filled completely and shall be smooth and free from surplus mortar on the inside of the structure. Brick structures shall be plastered with 1/2 inch of mortar over the entire outside surface of the walls. For square or rectangular structures, brick shall be laid in stretcher courses with a header course every sixth course. For round structures, brick shall be laid radially with every sixth course a stretcher course.

2.3.5 Precast Reinforced Concrete Manholes

Precast reinforced concrete manholes shall conform to ASTM C 478. Joints between precast concrete risers and tops shall be made with flexible watertight, rubber-type gaskets meeting the requirements of paragraph JOINTS.

2.3.6 Omitted

2.3.7 Frame and Cover for Gratings

Frame and cover for gratings shall be cast gray iron, ASTM A 48, Class 35B; cast ductile iron, ASTM A 536, Grade 65-45-12; or cast aluminum, ASTM B 26, Alloy 356. Weight, shape, size, and waterway openings for grates and curb inlets shall be as indicated on the plans.

2.3.8 Joints

2.3.8.1 Flexible Watertight Joints

a. Materials: Flexible watertight joints shall be made with plastic or rubber-type gaskets for concrete pipe and with factory-fabricated resilient materials for clay pipe. The design of joints and the physical requirements for plastic gaskets shall conform to AASHTO M 198, and rubber-type gaskets shall conform to ASTM C 443. Factory-fabricated resilient joint materials shall conform to ASTM C 425. Gaskets shall have not more than one factory-fabricated splice, except that two factory-fabricated splices of the rubber-type gasket are permitted if the nominal diameter of the pipe being gasketed exceeds 54 inches.

b. Test Requirements: Watertight joints shall be tested and shall meet test requirements of paragraph HYDROSTATIC TEST ON WATERTIGHT JOINTS. Rubber gaskets shall comply with the oil resistant gasket requirements of ASTM C 443. Certified copies of test results shall be delivered to the Contracting Officer before gaskets or jointing materials are installed. Alternate types of watertight joint may be furnished, if specifically approved.

2.3.8.2 External Sealing Bands

Requirements for external sealing bands shall conform to ASTM C 877.

2.3.8.3 Flexible Watertight, Gasketed Joints

a. Gaskets: When infiltration or exfiltration is a concern for pipe lines, the couplings may be required to have gaskets. The closed-cell expanded rubber gaskets shall be a continuous band approximately 7 inches wide and approximately 3/8 inch thick, meeting the requirements of ASTM D 1056, Type 2 A1, and shall have a quality retention rating of not less than 70 percent when tested for weather resistance by ozone chamber exposure, Method B of ASTM D 1171. Rubber O-ring gaskets shall be 13/16 inch in diameter for pipe diameters of 36 inches or smaller and 7/8 inch in diameter for larger pipe having 1/2 inch deep end corrugation. Rubber O-ring gaskets shall be 1-3/8 inches in diameter for pipe having 1 inch deep end corrugations. O-rings shall meet the requirements of AASHTO M 198 or ASTM C 443. Flexible plastic gaskets shall conform to requirements of AASHTO M 198, Type B.

b. Connecting Bands: Connecting bands shall be of the type, size and sheet thickness of band, and the size of angles, bolts, rods and lugs as indicated or where not indicated as specified in the applicable standards or specifications for the pipe. Exterior rivet heads in the longitudinal seam under the connecting band

shall be countersunk or the rivets shall be omitted and the seam welded. Watertight joints shall be tested and shall meet the test requirements of paragraph HYDROSTATIC TEST ON WATERTIGHT JOINTS.

2.3.8.4 PVC Plastic Pipes

Joints shall be solvent cement or elastomeric gasket type in accordance with the specification for the pipe and as recommended by the pipe manufacturer.

2.3.8.5 Omitted
2.3.8.6 Omitted
2.3.8.7 Omitted

2.3.8.8 Ductile Iron Pipe

Couplings and fittings shall be as recommended by the pipe manufacturer.

2.4 STEEL LADDER

Steel ladder shall be provided where the depth of the manhole exceeds 3 feet. These ladders shall be not less than 16 inches in width, with 3/4 inch diameter rungs spaced 12 inches apart. The two stringers shall be a minimum 3/8 inch thick and 2-1/2 inches wide. Ladders and inserts shall be galvanized after fabrication in conformance with ASTM A 123.

2.5 DOWNSPOUT BOOTS

Boots used to connect exterior downspouts to the storm-drainage system shall be of gray cast iron conforming to ASTM A 48, Class 30B or 35B. Shape and size shall be as indicated.

2.6 RESILIENT CONNECTORS

Flexible, watertight connectors used for connecting pipe to manholes and inlets shall conform to ASTM C 923.

2.7 HYDROSTATIC TEST ON WATERTIGHT JOINTS

2.7.1 Concrete, Clay, PVC and PE Pipe

A hydrostatic test shall be made on the watertight joint types as proposed. Only one sample joint of each type needs testing; however, if the sample joint fails because of faulty design or workmanship, an additional sample joint may be tested. During the test period, gaskets or other jointing material shall be protected from extreme temperatures which might adversely affect the performance of such materials. Performance requirements for joints in reinforced and nonreinforced concrete pipe shall conform to AASHTO M 198 or ASTM C 443. Test requirements for joints in clay pipe shall conform to ASTM C 425. Test requirements for joints in PVC and PE plastic pipe shall conform to ASTM D 3212.

2.7.2 Corrugated Steel and Aluminum Pipe

A hydrostatic test shall be made on the watertight joint system or coupling band type proposed. The moment strength required of the joint is expressed as 15 percent of the calculated moment capacity of the pipe on a transverse section remote from the joint by the AASHTO HB-16 (Division II, Section 26). The pipe shall be supported for the hydrostatic test with the joint located at the point which develops 15 percent of the moment capacity of the pipe based on the allowable span in feet for the pipe flowing full or 40,000 foot-pounds, whichever is less. Performance requirements shall be met at an internal hydrostatic pressure of 10 psi for a 10 minute period for both annular corrugated metal pipe and helical corrugated metal pipe with factory reformed ends.

PART 3 EXECUTION

3.1 EXCAVATION FOR PIPE CULVERTS, STORM DRAINS, AND DRAINAGE STRUCTURES

Excavation of trenches, and for appurtenances and backfilling for culverts and storm drains, shall be in accordance with the applicable portions of Section 02316 "Excavation, TRENCHING, AND BACKFILLING FOR UTILITIES SYSTEMS".

3.2 BEDDING

The bedding surface for the pipe shall provide a firm foundation of uniform density throughout the entire length of the pipe.

3.2.1 Concrete Pipe Requirements

When no bedding class is specified or detailed on the drawings, concrete pipe shall be bedded in a soil foundation accurately shaped and rounded to conform to the lowest one-fourth of the outside portion of circular pipe or to the lower curved portion of pipe arch for the entire length of the pipe or pipe arch. When necessary, the bedding shall be tamped. Bell holes and depressions for joints shall be not more than the length, depth, and width required for properly making the particular type of joint.

3.2.2 Omitted
3.2.3 Omitted

3.2.4 Ductile Iron Pipe

Bedding for ductile iron pipe shall be as shown on the drawings.

3.2.5 Plastic Pipe

Bedding for PVC pipe shall meet the requirements of ASTM D 2321. Bedding, haunching, and initial backfill shall be either Class IB or II material.

3.3 PLACING PIPE

Each pipe shall be thoroughly examined before being laid; defective or damaged pipe shall not be used. Plastic pipe shall be protected from exposure to direct sunlight prior to laying, if necessary to maintain adequate pipe stiffness and meet installation deflection requirements.

Pipelines shall be laid to the grades and alignment indicated. Proper facilities shall be provided for lowering sections of pipe into trenches. Lifting lugs in vertically elongated metal pipe shall be placed in the same vertical plane as the major axis of the pipe. Pipe shall not be laid in water, and pipe shall not be laid when trench conditions or weather are unsuitable for such work. Diversion of drainage or dewatering of trenches during construction shall be provided as necessary. Deflection of installed flexible pipe shall not exceed the following limits:

TYPE OF PIPE	MAXIMUM ALLOWABLE DEFLECTION (%)
Ductile Iron Culvert	3
Plastic	7.5

Not less than 30 days after the completion of backfilling, the Government may perform a deflection test on the entire length of installed flexible pipe using a mandrel or other suitable device. Installed flexible pipe showing deflections greater than those indicated above shall be retested by a run from the opposite direction. If the retest also fails, the suspect pipe shall be replaced at no cost to the Government.

3.3.1 Concrete, PVC, Ribbed PVC and Ductile Iron Pipe

Laying shall proceed upgrade with spigot ends of bell-and-spigot pipe and tongue ends of tongue-and-groove pipe pointing in the direction of the flow.

3.3.2 Elliptical and Elliptical Reinforced Concrete Pipe

The manufacturer's reference lines, designating the top of the pipe, shall be within 5 degrees of a vertical plane through the longitudinal axis of the pipe, during placement. Damage to or misalignment of the pipe shall be prevented in all backfilling operations.

3.3.3 Omitted
3.3.4 Omitted

3.4 JOINTING

3.4.1 Concrete Pipe

3.4.1.1 Cement-Mortar Bell-and-Spigot Joint

The first pipe shall be bedded to the established gradeline, with the bell end placed upstream. The interior surface of the bell shall be thoroughly cleaned with a wet brush and the lower portion of the bell filled with mortar as required to bring inner surfaces of abutting pipes flush and even. The spigot end of each subsequent pipe shall be cleaned with a wet brush and uniformly matched into a bell so that sections are closely fitted. After each section is laid, the remainder of the joint shall be filled with mortar, and a bead shall be formed around the outside of the

joint with sufficient additional mortar. If mortar is not sufficiently stiff to prevent appreciable slump before setting, the outside of the joint shall be wrapped or bandaged with cheesecloth to hold mortar in place.

3.4.1.2 Cement-Mortar Oakum Joint for Bell-and-Spigot Pipe

A closely twisted gasket shall be made of jute or oakum of the diameter required to support the spigot end of the pipe at the proper grade and to make the joint concentric. Joint packing shall be in one piece of sufficient length to pass around the pipe and lap at top. This gasket shall be thoroughly saturated with neat cement grout. The bell of the pipe shall be thoroughly cleaned with a wet brush, and the gasket shall be laid in the bell for the lower third of the circumference and covered with mortar. The spigot of the pipe shall be thoroughly cleaned with a wet brush, inserted in the bell, and carefully driven home. A small amount of mortar shall be inserted in the annular space for the upper two-thirds of the circumference. The gasket shall be lapped at the top of the pipe and driven home in the annular space with a caulking tool. The remainder of the annular space shall be filled completely with mortar and beveled at an angle of approximately 45 degrees with the outside of the bell. If mortar is not sufficiently stiff to prevent appreciable slump before setting, the outside of the joint thus made shall be wrapped with cheesecloth. Placing of this type of joint shall be kept at least five joints behind laying operations.

3.4.1.3 Cement-Mortar Diaper Joint for Bell-and-Spigot Pipe

The pipe shall be centered so that the annular space is uniform. The annular space shall be caulked with jute or oakum. Before caulking, the inside of the bell and the outside of the spigot shall be cleaned.

a. Diaper Bands: Diaper bands shall consist of heavy cloth fabric to hold grout in place at joints and shall be cut in lengths that extend one-eighth of the circumference of pipe above the spring line on one side of the pipe and up to the spring line on the other side of the pipe. Longitudinal edges of fabric bands shall be rolled and stitched around two pieces of wire. Width of fabric bands shall be such that after fabric has been securely stitched around both edges on wires, the wires will be uniformly spaced not less than 8 inches apart. Wires shall be cut into lengths to pass around pipe with sufficient extra length for the ends to be twisted at top of pipe to hold the band securely in place; bands shall be accurately centered around lower portion of joint.

b. Grout: Grout shall be poured between band and pipe from the high side of band only, until grout rises to the top of band at the spring line of pipe, or as nearly so as possible, on the opposite side of pipe, to ensure a thorough sealing of joint around the portion of pipe covered by the band. Silt, slush, water, or polluted mortar grout forced up on the lower side shall be forced out by pouring, and removed.

c. Remainder of Joint: The remaining unfilled upper portion of the joint shall be filled with mortar and a bead formed around the

outside of this upper portion of the joint with a sufficient amount of additional mortar. The diaper shall be left in place. Placing of this type of joint shall be kept at least five joints behind actual laying of pipe. No backfilling around joints shall be done until joints have been fully inspected and approved.

3.4.1.4 Cement-Mortar Tongue-and-Groove Joint

The first pipe shall be bedded carefully to the established gradeline with the groove upstream. A shallow excavation shall be made underneath the pipe at the joint and filled with mortar to provide a bed for the pipe. The grooved end of the first pipe shall be thoroughly cleaned with a wet brush, and a layer of soft mortar applied to the lower half of the groove. The tongue of the second pipe shall be cleaned with a wet brush; while in horizontal position, a layer of soft mortar shall be applied to the upper half of the tongue. The tongue end of the second pipe shall be inserted in the grooved end of the first pipe until mortar is squeezed out on interior and exterior surfaces. Sufficient mortar shall be used to fill the joint completely and to form a bead on the outside.

3.4.1.5 Cement-Mortar Diaper Joint for Tongue-and-Groove Pipe

The joint shall be of the type described for cement-mortar tongue-and-groove joint in this paragraph, except that the shallow excavation directly beneath the joint shall not be filled with mortar until after a gauze or cheesecloth band dipped in cement mortar has been wrapped around the outside of the joint. The cement-mortar bead at the joint shall be at least 1/2 inch, thick and the width of the diaper band shall be at least 8 inches. The diaper shall be left in place. Placing of this type of joint shall be kept at least five joints behind the actual laying of the pipe. Backfilling around the joints shall not be done until the joints have been fully inspected and approved.

3.4.1.6 Plastic Sealing Compound Joints for Tongue-and-Grooved Pipe

Sealing compounds shall follow the recommendation of the particular manufacturer in regard to special installation requirements. Surfaces to receive lubricants, primers, or adhesives shall be dry and clean. Sealing compounds shall be affixed to the pipe not more than 3 hours prior to installation of the pipe, and shall be protected from the sun, blowing dust, and other deleterious agents at all times. Sealing compounds shall be inspected before installation of the pipe, and any loose or improperly affixed sealing compound shall be removed and replaced. The pipe shall be aligned with the previously installed pipe, and the joint pulled together. If, while making the joint with mastic-type sealant, a slight protrusion of the material is not visible along the entire inner and outer circumference of the joint when the joint is pulled up, the pipe shall be removed and the joint remade. After the joint is made, all inner protrusions shall be cut off flush with the inner surface of the pipe. If nonmastic-type sealant material is used, the "Squeeze-Out" requirement above will be waived.

3.4.1.7 Flexible Watertight Joints

Gaskets and jointing materials shall be as recommended by the particular

manufacturer in regard to use of lubricants, cements, adhesives, and other special installation requirements. Surfaces to receive lubricants, cements, or adhesives shall be clean and dry. Gaskets and jointing materials shall be affixed to the pipe not more than 24 hours prior to the installation of the pipe, and shall be protected from the sun, blowing dust, and other deleterious agents at all times. Gaskets and jointing materials shall be inspected before installing the pipe; any loose or improperly affixed gaskets and jointing materials shall be removed and replaced. The pipe shall be aligned with the previously installed pipe, and the joint pushed home. If, while the joint is being made the gasket becomes visibly dislocated the pipe shall be removed and the joint remade.

3.4.1.8 External Sealing Band Joint for Noncircular Pipe

Surfaces to receive sealing bands shall be dry and clean. Bands shall be installed in accordance with manufacturer's recommendations.

3.5 DRAINAGE STRUCTURES

3.5.1 Manholes and Inlets

Construction shall be of reinforced concrete, plain concrete, brick, precast reinforced concrete, or precast concrete segmental blocks complete with frames and covers or gratings; and with fixed galvanized steel ladders where indicated. Pipe studs and junction chambers of prefabricated corrugated metal manholes shall be fully bituminous-coated and paved when the connecting branch lines are so treated. Pipe connections to concrete manholes and inlets shall be made with flexible, watertight connectors.

3.5.2 Walls and Headwalls

Construction shall be as indicated.

3.6 STEEL LADDER INSTALLATION

Ladder shall be adequately anchored to the wall by means of steel inserts spaced not more than 6 feet vertically, and shall be installed to provide at least 6 inches of space between the wall and the rungs. The wall along the line of the ladder shall be vertical for its entire length.

3.7 BACKFILLING

3.7.1 Backfilling Pipe in Trenches

After the pipe has been properly bedded, selected material from excavation or borrow, at a moisture content that will facilitate compaction, shall be placed along both sides of pipe in layers not exceeding 6 inches in loose thickness. The backfill shall be brought up evenly on both sides of pipe for the full length of pipe. The fill shall be thoroughly compacted under the haunches of the pipe. Each layer shall be thoroughly compacted with mechanical tampers or rammers. This method of filling and compacting shall continue until the fill has reached an elevation of at least 12 inches above the top of the pipe. The remainder of the trench shall be backfilled and compacted by spreading and rolling or compacted by mechanical rammers

or tampers in layers not exceeding 6 inches in loose thickness. Tests for density shall be made to ensure conformance to the compaction requirements specified below. Where it is necessary, in the opinion of the Contracting Officer, that sheeting or portions of bracing used be left in place, the contract will be adjusted accordingly. Untreated sheeting shall not be left in place beneath structures or pavements.

3.7.2 Backfilling Pipe in Fill Sections

For pipe placed in fill sections, backfill material and the placement and compaction procedures shall be as specified below. The fill material shall be uniformly spread in layers longitudinally on both sides of the pipe, not exceeding 6 inches in loose thickness, and shall be compacted by rolling parallel with pipe or by mechanical tamping or ramming. Prior to commencing normal filling operations, the crown width of the fill at a height of 12 inches above the top of the pipe shall extend a distance of not less than twice the outside pipe diameter on each side of the pipe or 12 feet, whichever is less. After the backfill has reached at least 12 inches above the top of the pipe, the remainder of the fill shall be placed and thoroughly compacted in layers not exceeding 6 inches in loose thickness.

3.7.3 Movement of Construction Machinery

When compacting by rolling or operating heavy equipment parallel with the pipe, displacement of or injury to the pipe shall be avoided. Movement of construction machinery over a culvert or storm drain at any stage of construction shall be at the Contractor's risk. Any damaged pipe shall be repaired or replaced.

3.7.4 Compaction

3.7.4.1 General Requirements

Cohesionless materials include gravels, gravel-sand mixtures, sands, and gravelly sands. Cohesive materials include clayey and silty gravels, gravel-silt mixtures, clayey and silty sands, sand-clay mixtures, clays, silts, and very fine sands. When results of compaction tests for moisture-density relations are recorded on graphs, cohesionless soils will show straight lines or reverse-shaped moisture-density curves, and cohesive soils will show normal moisture-density curves.

3.7.4.2 Minimum Density

Backfill over and around the pipe and backfill around and adjacent to drainage structures shall be compacted at the approved moisture content to the following applicable minimum density, which will be determined as specified below.

a. Under airfield and heliport pavements, paved roads, streets, parking areas, and similar-use pavements including adjacent shoulder areas, the density shall be not less than 90 percent of maximum density, up to the elevation where requirements for pavement subgrade materials and compaction shall control.

b. Under unpaved or turfed traffic areas, density shall not be less than 85 percent of maximum density.

c. Under nontraffic areas, density shall be not less than that of the surrounding material.

3.7.5 Determination of Density

Testing shall be the responsibility of the Contractor and performed at no additional cost to the Government. Testing shall be performed by an approved commercial testing laboratory. Laboratory tests for moisture-density relations shall be made in accordance with ASTM D 1557 except that mechanical tampers may be used provided the results are correlated with those obtained with the specified hand tamper. Field density tests shall be determined in accordance with ASTM D 1556. Moisture content shall be determined in accordance with ASTM D 2216. Testing of backfill materials, frequency of testing, and compaction control shall be as specified in Section 02316 EXCAVATION, TRENCHING, AND BACKFILLING FOR UTILITIES SYSTEMS. Test results shall be furnished to the Contracting Officer.

3.8 PIPELINE TESTING

Lines shall be tested for leakage by low pressure air or water testing or exfiltration tests, as appropriate. Low pressure air testing for vitrified clay pipes shall conform to ASTM C 828. Low pressure air testing for concrete pipes shall conform to ASTM C 924. Low pressure air testing for plastic pipe shall conform to ASTM F 1417. Low pressure air testing procedures for other pipe materials shall use the pressures and testing times prescribed in ASTM C 828 or ASTM C 924, after consultation with the pipe manufacturer. Testing of individual joints for leakage by low pressure air or water shall conform to ASTM C 1103. Prior to exfiltration tests, the trench shall be backfilled up to at least the lower half of the pipe. If required, sufficient additional backfill shall be placed to prevent pipe movement during testing, leaving the joints uncovered to permit inspection. Visible leaks encountered shall be corrected regardless of leakage test results. When the water table is 2 feet or more above the top of the pipe at the upper end of the pipeline section to be tested, infiltration shall be measured using a suitable weir or other device acceptable to the Contracting Officer. An exfiltration test shall be made by filling the line to be tested with water so that a head of at least 2 feet is provided above both the water table and the top of the pipe at the upper end of the pipeline to be tested. The filled line shall be allowed to stand until the pipe has reached its maximum absorption, but not less than 4 hours. After absorption, the head shall be reestablished. The amount of water required to maintain this water level during a 2-hour test period shall be measured. Leakage as measured by the exfiltration test shall not exceed 0.2 gallons per inch in diameter per 100 feet of pipeline per hour. When leakage exceeds the maximum amount specified, satisfactory correction shall be made and retesting accomplished. Testing, correcting, and retesting shall be made at no additional cost to the Government.

-- End of Section --

SECTION TABLE OF CONTENTS

DIVISION 02 - SITE WORK

SECTION 02754

CONCRETE PAVEMENTS FOR SMALL PROJECTS

03/97

PART 1 GENERAL

1.1 REFERENCES
1.2 SYSTEM DESCRIPTION
1.3 OMITTED
1.4 ACCEPTABILITY OF WORK
1.4.1 Evaluation Sampling
1.4.2 Surface Testing
1.4.2.1 Surface Smoothness Requirements
1.4.2.2 Surface Smoothness Testing Method
1.4.3 Omitted
1.4.4 Plan Grade Testing and Conformance
1.5 PRECONSTRUCTION TESTING OF MATERIALS
1.6 SUBMITTALS
1.7 EQUIPMENT
1.7.1 Batching and Mixing
1.7.2 Transporting Equipment
1.7.3 Delivery Equipment
1.7.4 Paver-Finisher
1.7.4.1 Paver-Finisher with Fixed Forms
1.7.4.2 Slipform Paver-Finisher
1.7.4.3 Other Types of Finishing Equipment
1.7.5 Curing Equipment
1.7.6 Texturing Equipment
1.7.6.1 Fabric Drag
1.7.6.2 Deep Texturing Equipment
1.7.7 Sawing Equipment
1.7.8 Straightedge

PART 2 PRODUCTS

2.1 CEMENTITIOUS MATERIALS
2.1.1 Portland Cement
2.1.2 Omitted
2.1.3 Omitted
2.1.4 Pozzolan (Fly Ash)
2.2 AGGREGATES
2.2.1 Coarse Aggregate
2.2.2 Fine Aggregate
2.3 CHEMICAL ADMIXTURES
2.4 CURING MATERIALS
2.5 WATER
2.6 JOINT MATERIALS

2.6.1 Expansion Joint Material
2.6.2 Slip Joint Material
2.7 REINFORCING
2.7.1 General
2.8 DOWELS AND TIE BARS
2.8.1 Dowels
2.9 OMITTED
2.10 SPECIFIED CONCRETE STRENGTH AND OTHER PROPERTIES
2.11 MIXTURE PROPORTIONS
2.11.1 Composition Concrete
2.11.2 Concrete Mixture Proportioning Studies
2.11.3 Mixture Proportioning Procedure
2.11.4 Average Strength Required for Mixtures

PART 3 EXECUTION

3.1 CONDITIONING OF UNDERLYING MATERIAL
3.2 WEATHER LIMITATIONS
3.2.1 Hot Weather Paving
3.2.2 Cold Weather Paving
3.3 CONCRETE PRODUCTION
3.3.1 General Requirements
3.3.2 Transporting and Transfer-Spreading Operations
3.4 PAVING
3.4.1 Consolidation
3.4.2 Operation
3.4.3 Required Results
3.4.4 Fixed Form Paving
3.4.5 Slipform Paving
3.4.6 Placing Reinforcing Steel
3.4.7 Placing Dowels and Tie Bars
3.4.7.1 Contraction Joints
3.4.7.2 Construction Joints-Fixed Form Paving
3.4.7.3 Omitted
3.4.7.4 Expansion Joints
3.5 FINISHING
3.5.1 Machine Finishing With Fixed Forms
3.5.2 Machine Finishing With Slipform Pavers
3.5.3 Surface Correction
3.5.4 Hand Finishing
3.5.5 Texturing
3.5.5.1 Fabric-Drag Surface Finish
3.5.5.2 Broom Texturing
3.5.6 Edging
3.6 CURING
3.6.1 Membrane Curing
3.6.2 Moist Curing
3.7 JOINTS
3.7.1 Longitudinal Construction Joints
3.7.2 Transverse Construction Joints
3.7.3 Expansion Joints
3.7.4 Slip Joints
3.7.5 Contraction Joints
3.7.5.1 Sawed Joints

3.7.5.2 Insert-Type Joints
3.7.6 Thickened Edge Joints
3.8 REPAIR, REMOVAL, AND REPLACEMENT OF SLABS
3.8.1 Removal and Replacement of Full Slabs
3.8.2 Repairing Spalls Along Joints
3.8.3 Areas Defective in Plan Grade or Smoothness
3.9 EXISTING CONCRETE PAVEMENT REMOVAL AND REPAIR
3.10 PAVEMENT PROTECTION
3.11 TESTING AND INSPECTION FOR CONTRACTOR QUALITY CONTROL (CQC)
3.11.1 Batch Plant Control
3.11.2 Concrete Mixture
3.11.3 Inspection Before Placing
3.11.4 Paving Operations
3.11.5 Curing Inspection
3.11.6 Cold-Weather Protection
3.11.7 Reports

-- End of Section Table of Contents --

CEGS-02754 (March 1997)

Includes changes through Notice 1 (March 1999)

SECTION 02754
CONCRETE PAVEMENTS FOR SMALL PROJECTS
03/97

PART 1 GENERAL

1.1 REFERENCES

The publications listed below form a part of this specification to the extent referenced. The publications are referred to in the text by basic designation only.

ACI INTERNATIONAL (ACI)

ACI 211.1	(1991) Standard Practice for Selecting Proportions for Normal, Heavyweight, and Mass Concrete
ACI 301	(1996) Standard Specification for Structural Concrete
ACI 305R	(1991) Hot Weather Concreting

AMERICAN SOCIETY FOR TESTING AND MATERIALS (ASTM)

ASTM A 184/A 184M	(1996) Fabricated Deformed Steel Bar Mats for Concrete Reinforcement
ASTM A 615/A 615M	(1996a) Deformed and Plain Billet-Steel Bars for Concrete Reinforcement
ASTM C 31/C 31M	(1996) Making and Curing Concrete Test Specimens in the Field
ASTM C 33	(1997) Concrete Aggregates
ASTM C 39	(1996) Compressive Strength of Cylindrical Concrete Specimens
ASTM C 94	(1997) Ready-Mixed Concrete
ASTM C 123	(1996) Lightweight Pieces in Aggregate
ASTM C 143	(1990a) Slump of Hydraulic Cement Concrete
ASTM C 150	(1997) Portland Cement

ASTM C 192/C 192M	(1995) Making and Curing Concrete Test Specimens in the Laboratory
ASTM C 231	(1997) Air Content of Freshly Mixed Concrete by the Pressure Method
ASTM C 260	(1995) Air-Entraining Admixtures for Concrete
ASTM C 494	(1992) Chemical Admixtures for Concrete
ASTM C 618	(1997) Coal Fly Ash and Raw or Calcined Natural Pozzolan for Use as a Mineral Admixture in Concrete
ASTM C 666	(1992) Resistance of Concrete to Rapid Freezing and Thawing
ASTM C 1077	(1997) Laboratories Testing Concrete and Concrete Aggregates for Use in Construction and Criteria for Laboratory Evaluation
ASTM D 1751	(1983; R 1991) Preformed Expansion Joint Filler for Concrete Paving and Structural Construction (Nonextruding and Resilient Bituminous Types)
ASTM D 1752	(1984; R 1996) Preformed Sponge Rubber and Cork Expansion Joint Fillers for Concrete Paving and Structural Construction

ARMY CORPS OF ENGINEERS (COE)

COE CRD-C 130	(1989) Scratch Hardness of Coarse Aggregate Particles
COE CRD-C 300	(1990) Specifications for Membrane-Forming Compounds for Curing Concrete

NATIONAL READY-MIXED CONCRETE ASSOCIATION (NRMCA)

NRMCA CPMB 100	(1996) Concrete Plant Standards

1.2 SYSTEM DESCRIPTION

This section is intended to stand alone for construction of concrete (rigid) pavement. However, where the construction covered herein interfaces with other sections, the construction at each interface shall conform to the requirements of both this section and the other section, including tolerances for both.

1.3 OMITTED

1.4 ACCEPTABILITY OF WORK

The pavement will be accepted on the basis of tests made by the Government and by the Contractor or its suppliers, as specified herein. The Government may, at its discretion, make check tests to validate the results of the Contractor's testing. Concrete samples shall be taken by the Contractor at the placement to determine the slump, air content, and strength of the concrete. Test cylinders shall be made for determining conformance with the strength requirements of these specifications and, when required, for determining the time at which pavements may be placed into service. All air content measurements shall be determined in accordance with ASTM C 231. All slump tests shall be made in accordance with ASTM C 143. All test cylinders shall be 6 by 12 inch cylinders and shall be fabricated in accordance with ASTM C 192/C 192M, using only steel molds, cured in accordance with ASTM C 31/C 31M, and tested in accordance with ASTM C 39. A strength test shall be the average of the strengths of two cylinders made from the same sample of concrete and tested at 28 days. The Contractor shall furnish all materials, labor, and facilities required for molding, curing, testing, and protecting test specimens at the site and in the laboratory.

1.4.1 Evaluation Sampling

Sampling, testing, and mixture proportioning shall be performed by a commercial Testing Laboratory, conforming with ASTM C 1077. The individuals who sample and test concrete and concrete constituents shall be certified as American Concrete Institute (ACI) Concrete Field Testing Technicians, Grade I. The individuals who perform the inspection of concrete shall be certified as ACI Concrete Construction Inspector, Level II. All mix design, weekly quality control reports, smoothness reports, and project certification reports shall be signed by a Registered Engineer.

1.4.2 Surface Testing

Surface testing for surface smoothness and plan grade shall be performed as indicated below by the Testing Laboratory. The measurements shall be properly referenced in accordance with paving lane identification and stationing, and a report given to the Government within 24 hours after measurement is made. A final report of surface testing, signed by a Registered Engineer, containing all surface measurements and a description of all actions taken to correct deficiencies, shall be provided to the Government upon conclusion of surface testing.

1.4.2.1 Surface Smoothness Requirements

The finished surfaces of the pavements shall have no abrupt change of 1/8 inch or more, and all pavements shall be within the tolerances specified in Table 1 when checked with the straightedge.

TABLE 1
STRAIGHTEDGE SURFACE SMOOTHNESS--PAVEMENTS

Pavement Category	Direction of Testing	Tolerances inches
Roads and Streets	Longitudinal	3/16
	Transverse	1/4
Tank Hardstands, Parking Areas, Open Storage Areas	Longitudinal	1/4
	Transverse	1/4

1.4.2.2 Surface Smoothness Testing Method

The surface of the pavement shall be tested with the straightedge to identify all surface irregularities exceeding the tolerances specified above. The entire area of the pavement shall be tested in both a longitudinal and a transverse direction on parallel lines approximately 15 feet apart. The straightedge shall be held in contact with the surface and moved ahead one-half the length of the straightedge for each successive measurement. The amount of surface irregularity shall be determined by placing the straightedge on the pavement surface and allowing it to rest upon the two highest spots covered by its length and measuring the maximum gap between the straightedge and the pavement surface, in the area between these two high points.

1.4.3 Omitted

1.4.4 Plan Grade Testing and Conformance

The finished surface of the pavements shall conform, within the tolerances shown in Table 1, to the lines, grades, and cross sections shown. The finished surface of new abutting pavements shall coincide at their juncture. The finished surface of airfield runway, taxiway, and apron pavements shall vary not more than 0.04 foot above or below the plan grade line or elevation indicated. The surfaces of other pavements shall vary not more than 0.06 foot above or below the plan grade line or elevation indicated. Each pavement category shall be checked by the Contractor for conformance with plan grade requirements by running lines of levels at intervals to determine the elevation at each joint intersection.

1.5 PRECONSTRUCTION TESTING OF MATERIALS

The Contractor shall not be entitled to any additional payment or extension of time because of delays caused by sampling and testing additional sources, or samples, necessitated by failure of any samples. Aggregates shall be sampled and tested by the Test Laboratory and shall be representative of the materials to be used for the project. Test results, signed by a Registered Engineer, shall be submitted 30 days before commencing paving. No aggregate shall be used unless test results show that it meets all requirements of these specifications, including compliance with ASTM C 33 and deleterious materials limitations.

1.6 SUBMITTALS

Government approval is required for submittals with a "G" designation; submittals not having a "G" designation are for information only. When used, a designation following the "G" designation identifies the office that will review the submittal for the Government. The following shall be submitted in accordance with Section 01330 SUBMITTAL PROCEDURES:

SD-03 Product Data

Equipment; G, RE

Manufacturer's literature on the concrete plant; mixing equipment; hauling equipment; placing and finishing, and curing equipment; at least 7 days prior to start of paving.

Paving

Paving Schedules at least 7 days prior to start of paving.

Mixture Proportions; G, RE

The report of the Contractor's mixture proportioning studies showing the proportions of all ingredients and supporting information on aggregate and other materials that will be used in the manufacture of concrete, at least 14 days prior to commencing concrete placing operations.

1.7 EQUIPMENT

1.7.1 Batching and Mixing

The batching plant shall conform to NRMCA CPMB 100, the equipment requirements in ASTM C 94, and as specified. Water shall not be weighed or measured cumulatively with another ingredient. All concrete materials batching shall meet ASTM C 94 requirements. Mixers shall be stationary mixers. Batching, mixers, mixing time, permitted reduction of mixing time, and concrete uniformity shall meet the requirements of ASTM C 94, and shall be documented in the initial weekly QC Report.

1.7.2 Transporting Equipment

Transporting equipment shall be in conformance with ASTM C 94 and as specified herein. Concrete shall be transported to the paving site in rear-dump trucks, in truck mixers designed with extra large blading and rear opening specifically for low slump concrete, or in agitators. Bottom-dump trucks shall not be used for delivery of concrete.

1.7.3 Delivery Equipment

When concrete transport equipment cannot operate on the paving lane, side-delivery transport equipment consisting of self-propelled moving conveyors shall be used to deliver concrete from the transport equipment

and discharge it in front of the paver. Front-end loaders, dozers, or similar equipment shall not be used to distribute the concrete.

1.7.4 Paver-Finisher

The paver-finisher shall be a heavy-duty, self-propelled machine designed specifically for paving and finishing high quality pavement. The paver-finisher shall spread, consolidate, and shape the plastic concrete to the desired cross section in one pass. The paver-finisher shall be equipped with a full width "knock-down" auger, capable of operating in both directions, which will evenly spread the fresh concrete in front of the screed or extrusion plate. Immersion vibrators shall be gang mounted at the front of the paver on a frame equipped with suitable controls so that all vibrators can be operated at any desired depth within the slab or completely withdrawn from the concrete. The vibrators shall be automatically controlled so that they will be immediately stopped as forward motion of the paver ceases. The spacing of the immersion vibrators across the paving lane shall be as necessary to properly consolidate the concrete, but the clear distance between vibrators shall not exceed 30 inches, and the outside vibrators shall not exceed 12 inches from the edge of the lane. The paver-finisher shall be equipped with a transversely oscillating screed or an extrusion plate to shape, compact, and smooth the surface.

1.7.4.1 Paver-Finisher with Fixed Forms

The paver-finisher shall be equipped with wheels designed to ride the forms, keep it aligned with the forms, and to spread the preventing deformation of the forms.

1.7.4.2 Slipform Paver-Finisher

The slipform paver-finisher shall be automatically controlled and crawler mounted with padded tracks. Horizontal alignment shall be electronically referenced to a taut wire guideline. Vertical alignment shall be electronically referenced on both sides of the paver to a taut wire guideline, to an approved laser control system, or to a ski operating on a completed lane. Control from a slope-adjustment control or control operating from the underlying material shall not be used.

1.7.4.3 Other Types of Finishing Equipment

Clary screeds or other rotating tube floats will not be allowed on the project.

1.7.5 Curing Equipment

Equipment for curing is specified in paragraph CURING.

1.7.6 Texturing Equipment

Texturing equipment shall be as specified below.

1.7.6.1 Fabric Drag

A fabric drag shall consist of a piece of fabric material as wide as the lane width securely attached to a separate wheel mounted frame spanning the paving lane or to one of the other similar pieces of equipment. The material shall be wide enough to provide 12 to 18 inches dragging flat on the pavement surface. The fabric material shall be clean, reasonably new burlap, kept clean and saturated during use.

1.7.6.2 Deep Texturing Equipment

Texturing equipment shall consist of a stiff bristled broom or a comb with spring wire tines forming a drag at least 4 feet long. This drag shall be mounted in a wheeled frame spanning the paving lane and constructed to mechanically pull the drag in a straight line across the paving lane perpendicular to the centerline.

1.7.7 Sawing Equipment

Equipment for sawing joints and for other similar sawing of concrete shall be standard diamond-tip-bladed concrete saws mounted on a wheeled chassis.

1.7.8 Straightedge

The Contractor shall furnish and maintain at the job site one 12 foot straightedge for testing concrete surface smoothness. The straightedge shall be constructed of aluminum or magnesium alloy and shall have blades of box or box-girder cross section with flat bottom, adequately reinforced to insure rigidity and accuracy. Straightedges shall have handles for operation on the pavement.

PART 2 PRODUCTS

2.1 CEMENTITIOUS MATERIALS

Cementitious materials shall be portland cement or portland-pozzolan cement and shall conform to appropriate specifications listed below.

2.1.1 Portland Cement

Portland cement shall conform to ASTM C 150 Type II, low-alkali.

2.1.2 Omitted

2.1.3 Omitted

2.1.4 Pozzolan (Fly Ash)

Fly ash shall conform to ASTM C 618 Class F, including all the supplementary optional physical requirements.

2.2 AGGREGATES

Aggregates shall consist of clean, hard, uncoated particles meeting the requirements of ASTM C 33, including deleterious materials, abrasion loss

and soundness requirements of ASTM C 33, and other requirements specified herein. Aggregate not having a satisfactory demonstrable service record shall have a durability factor of 50 or more when subjected to freezing and thawing in concrete in accordance with ASTM C 666.

In addition to the grading requirements specified for coarse aggregate and for fine aggregate, the combined aggregate grading shall meet the following requirements.

a. If necessary, a blending aggregate shall be used to meet the required combined grading. This blending aggregate shall be batched separately. The combined grading of all aggregates used, in the proportions selected, shall be computed on the basis of cumulative percent retained on each sieve specified for fine and coarse aggregate.

b. The materials selected and the proportions used shall be such that when the Coarseness Factor (CF) and the Workability Factor (W) are plotted on a diagram as described in d. below, the point thus determined shall fall within the parallelogram described therein.

c. The Coarseness Factor (CF) shall be determined from the the following equation:

CF = (cumulative percent retained on the 3/8 in. sieve)(100)/(cumulative percent retained on the No. 8 sieve)

The Workability Factor (W) is defined as the cumulative percent passing the No. 8 sieve. However, W shall be adjusted, upwards only, by 2.5 percentage points for each 94 pounds of cementitious material per cubic yard greater than 564 pounds per cubic yard.

d. A diagram shall be plotted using a rectangular scale with W on the Y-axis with units from 20 (bottom) to 45 (top), and with CF on the X-axis with units from 80 (left side) to 30 (right side). On this diagram a parallelogram shall be plotted with corners at the following coordinates (CF-75, W-28), (CF-75, W-40), (CF-45, W-32.5), and (CF-45, W-41). If the point determined by the intersection of the computed CF and W does not fall within the above parallelogram, the grading of each size of aggregate used and the proportions selected shall be changed as necessary.

e. In addition, the individual percent retained on each sieve shall be plotted for the combined aggragate grading, on either rectangular or semi-log graph paper. The graph shall show a relative smooth transition between coarse and fine aggregate and shall have no major valleys or peaks in the area smaller than the No. 8 sieve. If this plot does not meet the above criteria, the grading of each size aggregate used and the proportions selected shall be changed as necessary.

2.2.1 Coarse Aggregate

Coarse aggregate shall consist of crushed gravel, crushed stone, or a

combination thereof. The nominal maximum size of the coarse aggregate shall be 3/4 inches. When the nominal maximum size is greater than 1 inch, the aggregates shall be furnished in two ASTM C 33 size groups, No. 67 and No. 4. The amount of deleterious material in each size of coarse aggregate shall not exceed the limits shown in ASTM C 33 Class 1N, 4M or 4S, depending on the weathering region, and the following limits:

a. Lightweight particles 1.0 max. percent by mass (ASTM C 123).

b. Other soft particles 2.0 max. percent by mass (COE CRD-C 130).

c. Total of all deleterious 5.0 max. percent by mass (substances listed in ASTM C 33 and above, exclusive of material finer than No. 200 sieve).

d. The separation medium for lightweight particles shall have a density of Sp. Gr. of 2.0.

2.2.2 Fine Aggregate

Fine aggregate shall consist of natural sand, manufactured sand, or a combination of the two, and shall be composed of clean, hard, durable particles. All fine aggregate shall be composed of clean, hard, durable particles meeting the requirements of ASTM C 33 and the requirements herein. The amount of deleterious material in the fine aggregate shall not exceed the limits in ASTM C 33and shall not exceed the following limits:

a. Lightweight particles (ASTM C 123) 1.0 percent max. by mass using a medium Sp. Gr. of 2.0.

b. The total of all deleterious material types, listed in ASTM C 33 and above, shall not exceed 3.0 percent of the mass of the fine aggregate.

2.3 CHEMICAL ADMIXTURES

Air-entraining admixture shall conform to ASTM C 260. An accelerator shall be used only when specified in paragraph SPECIFIED CONCRETE STRENGTH AND OTHER PROPERTIES and shall not be used to reduce the amount of cementitious material used. Accelerator shall conform to ASTM C 494Type C. Calcium chloride and admixtures containing calcium chloride shall not be used. A water-reducing or retarding admixture shall meet the requirements of ASTM C 494. Type G or H admixtures are not allowed.

2.4 CURING MATERIALS

Membrane forming curing compound shall be a white pigmented compound conforming to COE CRD-C 300. Burlap shall be new or shall be clean material never used for anything other than curing concrete.

2.5 WATER

Water for mixing and curing shall be clean, potable, and free of injurious amounts of oil, acid, salt, or alkali.

2.6 JOINT MATERIALS

2.6.1 Expansion Joint Material

Expansion joint filler shall be a preformed material conforming to ASTM D 1751. Expansion joint filler shall be 3/4 inch thick.

2.6.2 Slip Joint Material

Slip joint material shall be 1/4 inch thick expansion joint filler conforming to ASTM D 1751 or ASTM D 1752.

2.7 REINFORCING

2.7.1 General

Reinforcing bars shall conform to ASTM A 615/A 615M Grade 60. Bar mats shall conform to ASTM A 184/A 184M. Reinforcement shall be free from loose, flaky rust, loose scale, oil, grease, mud, or other coatings that might reduce the bond with concrete.

2.8 DOWELS AND TIE BARS

2.8.1 Dowels

Dowels shall be single piece, plain (non-deformed) steel bars conforming to ASTM A 615/A 615M Grade 60 or higher. Dowels shall be free of loose, flaky rust and loose scale and shall be clean and straight.

2.9 OMITTED

2.10 SPECIFIED CONCRETE STRENGTH AND OTHER PROPERTIES

Specified compressive strength, f'c, for concrete is 4000 psi at 28 days. Maximum allowable water-cementitious material ratio is 0.45. The water-cementitious material ratio is based on absolute volume equivalency, where the ratio is determined using the weight of cement for a cement only mix, or using the total volume of cement plus pozzolan converted to an equivalent weight of cement by the absolute volume equivalency method described in ACI 211.1. The concrete shall be air-entrained with a total air content of 6 plus or minus 1 percent. The maximum allowable slump of the concrete shall be 3 inchesfor pavement constructed with fixed forms. For slipformed pavement, the maximum allowable slump shall be 1-1/4 inches. The strength of the concrete will be considered satisfactory so long as the average of all sets of three consecutive test results equals or exceeds the specified compressive strength f'c and no individual test result falls below the specified strength f'c by more than 500 psi. Additional analysis or testing, including taking cores and/or load tests may be required at the Contractor's expense when the strength of the concrete in the structure is considered potentially deficient.

2.11 MIXTURE PROPORTIONS

2.11.1 Composition Concrete

Composition concrete shall be composed of cementitious material, water, fine and coarse aggregates, and admixtures. Fly ash, if used, shall be used only at a rate between 15 and 35 percent by mass of the total cementitious material. Admixtures shall consist of air entraining admixture and may also include water-reducing admixture. High range water-reducing admixtures and admixtures to produce flowable concrete shall not be used. No substitutions shall be made in the materials used in the mixture proportions without additional tests to show that the quality of the concrete is satisfactory.

2.11.2 Concrete Mixture Proportioning Studies

Trial design batches, mixture proportioning studies, and testing shall be the responsibility of the Contractor, and shall be performed by the Test Laboratory and signed by a Registered Engineer. No concrete pavement shall be placed until the Contracting Officer has approved the Contractor's mixture proportions. All materials used in mixture proportioning studies shall be representative of those proposed for use on the project. If there is a change in materials, additional mixture design studies shall be made using the new materials. Trial mixtures having proportions, slumps, and air content suitable for the work shall be based on methodology described in ACI 211.1. At least three different water-cementitious ratios, which will produce a range of strength encompassing that required on the project, shall be used. Laboratory trial mixtures shall be proportioned for maximum permitted slump and air content. Maximum sand content shall be 40 percent of the total aggregate SSD weight. Aggregate quantities shall be based on the mass in a saturated surface dry condition.

2.11.3 Mixture Proportioning Procedure

The Contractor shall perform the following:

a. Fabricate, cure and test 6 test cylinders per age for each mixture at 7 and 28 days.

b. Using the average strength for each w/(c+p), plot the results from each of the three mixtures on separate graphs for w/(c+p) versus 28-day strength.

c. From the graphs select a w/(c+p) which will produce a mixture giving a 28-day strength equal to the required strength determined in accordance with the following paragraph.

2.11.4 Average Strength Required for Mixtures

In order to ensure meeting, during production, the strength requirements specified, the mixture proportions selected shall produce a required average strength, f'cr, exceeding the specified strength, f'c, in accordance with procedures in Chapter 3 of ACI 301, "Proportioning."

PART 3 EXECUTION

3.1 CONDITIONING OF UNDERLYING MATERIAL

Underlying material, upon which concrete is to be placed shall be clean, damp, and free from debris, waste concrete or cement, frost, ice, and standing or running water. After the underlying material has been prepared for concrete placement, no equipment shall be permitted thereon.

3.2 WEATHER LIMITATIONS

3.2.1 Hot Weather Paving

The temperature of concrete shall not exceed 90 degrees F. Steel forms, dowels and reinforcing shall be cooled prior to concrete placement when steel temperatures are greater than 120 degrees F.

3.2.2 Cold Weather Paving

The ambient temperature of the air at the placing site and the temperature of surfaces to receive concrete shall be not less 40 degrees F. The temperature of the concrete when placed shall be not less than 50 degrees F. Materials entering the mixer shall be free from ice, snow, or frozen lumps. Salt, chemicals or other materials shall not be incorporated in the concrete to prevent freezing. Calcium chloride shall not be used at any time. Covering and other means shall be provided for maintaining the concrete at a temperature of at least 50 degrees F for not less than 72 hours after placing, and at a temperature above freezing for the remainder of the curing period. Pavement damaged by freezing shall be completely removed and replaced at the Contractor's expense as specified in paragraph, REPAIR, REMOVAL, AND REPLACEMENT OF SLABS.

3.3 CONCRETE PRODUCTION

3.3.1 General Requirements

Concrete shall be deposited in front of the paver within 45 minutes from the time cement has been charged into the mixing drum, except that if the ambient temperature is above 90 degrees F, the time shall be reduced to 30 minutes. Every load of concrete delivered to the paving site shall be accompanied by a batch ticket from the operator of the batching plant. Tickets shall show at least the mass, or volume, of all ingredients in each batch delivered, and the time of day. Tickets shall be delivered to the placing foreman who shall keep them on file and deliver them to the Government daily.

3.3.2 Transporting and Transfer-Spreading Operations

Non-agitating equipment shall be used only on smooth roads and for haul time less than 15 minutes. Equipment shall be allowed to operate on the underlying material only if no damage is done to the underlying material and its degree of compaction. Any disturbance to the underlying material that does occur shall be corrected before the paver-finisher reaches the location of the disturbance and the equipment shall be replaced or procedures changed to prevent any future damage. Additional water may be added to truck mixers to bring the slump within the specified range

provided the mixture water-cement ratio is not exceeded.

3.4 PAVING

Pavement shall be constructed with paving and finishing equipment utilizing fixed forms or slipforms.

3.4.1 Consolidation

The paver vibrators shall be inserted into the concrete not closer to the underlying material than 2 inches. The vibrators or any tamping units in front of the paver shall be automatically controlled so that they shall be stopped immediately as forward motion ceases. Excessive vibration shall not be permitted. Concrete in small, odd-shaped slabs or in locations inaccessible to the paver mounted vibration equipment shall be vibrated with a hand-operated immersion vibrator. Vibrators shall not be used to transport or spread the concrete.

3.4.2 Operation

When the paver is operated between or adjacent to previously constructed pavement (fill-in lanes), provisions shall be made to prevent damage to the previously constructed pavement, including keeping the existing pavement surface free of any debris, and placing rubber mats beneath the paver tracks. Transversely oscillating screeds and extrusion plates shall overlap the existing pavement the minimum possible, but in no case more than 8 inches.

3.4.3 Required Results

The paver-finisher shall be operated to produce a thoroughly consolidated slab throughout, true to line and grade within specified tolerances. The paver-finishing operation shall produce a surface finish free of irregularities, tears, voids of any kind, and any other discontinuities. It shall produce only a very minimum of paste at the surface. Multiple passes of the paver-finisher shall not be permitted. The equipment and its operation shall produce a finished surface requiring no hand finishing, other than the use of cutting straightedges, except in very infrequent instances. No water, other than true fog sprays (mist), shall be applied to the concrete surface during paving and finishing.

3.4.4 Fixed Form Paving

Forms shall be steel, except that wood forms may be used for curves having a radius of 150 feet or less, and for fillets. Forms may be built up with metal or wood, added only to the base, to provide an increase in depth of not more than 25 percent. The base width of the form shall be not less than eight-tenths of the vertical height of the form, except that forms 8 inches or less in vertical height shall have a base width not less than the vertical height of the form. Wood forms for curves and fillets shall be adequate in strength and rigidly braced. Forms shall be set on firm material cut true to grade so that each form section when placed will be firmly in contact with the underlying layer for its entire base. Forms shall not be set on blocks or on built-up spots of underlying material.

Forms shall remain in place at least 12 hours after the concrete has been placed. Forms shall be removed without injuring the concrete.

3.4.5 Slipform Paving

The slipform paver shall shape the concrete to the specified and indicated cross section in one pass, and shall finish the surface and edges so that only a very minimum amount of hand finishing is required. Dowels shall not be installed by dowel inserters attached to the paver or by any other means of inserting the dowels into the plastic concrete.

3.4.6 Placing Reinforcing Steel

Reinforcement shall be positioned on suitable chairs securely fastened to the subgrade prior to concrete placement, or may be placed on an initial layer of consolidated concrete, with the subsequent layer placed within 30 minutes of the first layer placement.

3.4.7 Placing Dowels and Tie Bars

Dowels shall be installed with alignment not greater than 1/8 inch per ft. Except as otherwise specified below, location of dowels shall be within a horizontal tolerance of plus or minus 5/8 inch and a vertical tolerance of plus or minus 3/16 inch. The portion of each dowel intended to move within the concrete or expansion cap shall be painted with one coat of rust inhibiting primer paint, and then oiled just prior to placement. Dowels in joints shall be omitted when the center of the dowel is located within a horizontal distance from an intersecting joint equal to or less than one-fourth of the slab thickness.

3.4.7.1 Contraction Joints

Dowels in longitudinal and transverse contraction joints within the paving lane shall be held securely in place by means of rigid metal basket assemblies. The dowels shall be welded to the assembly or held firmly by mechanical locking arrangements that will prevent them from becoming distorted during paving operations. The basket assemblies shall be held securely in the proper location by means of suitable anchors.

3.4.7.2 Construction Joints-Fixed Form Paving

Installation of dowels shall be by the bonded-in-place method, supported by means of devices fastened to the forms. Installation by removing and replacing in preformed holes will not be permitted.

3.4.7.3 Omitted

3.4.7.4 Expansion Joints

Dowels in expansion joints shall be installed by the bonded-in-place method or by bonding into holes drilled in hardened concrete, using procedures specified above.

3.5 FINISHING

Clary screeds, "bridge deck" finishers, or other rotating pipe or tube type equipment shall not be permitted. The sequence of machine operations shall be transverse finishing, longitudinal machine floating if used, straightedge finishing, texturing, and then edging of joints. Hand finishing shall be used only infrequently and only on isolated areas of odd slab shapes and in the event of a breakdown of the mechanical finishing equipment. Supplemental hand finishing for machine finished pavement shall be kept to an absolute minimum. Equipment to be used for supplemental hand finishing shall primarily be 10 to 12 feet cutting straightedges; only very sparing use of bull floats shall be allowed. At no time shall water be added to the surface of the slab in any way, except for fog (mist) sprays to prevent plastic shrinkage cracking.

3.5.1 Machine Finishing With Fixed Forms

The machine shall be designed to ride the forms. Machines that cause displacement of the forms shall be replaced. The machine shall make only one pass over each area of pavement. If the equipment and procedures do not produce a surface of uniform texture, true to grade, in one pass, the operation shall be immediately stopped and the equipment, mixture, and procedures adjusted as necessary.

3.5.2 Machine Finishing With Slipform Pavers

If there is sufficient concrete slurry or fluid paste on the surface that it runs over the edge of the pavement, the paving operation shall be immediately stopped and the equipment, mixture, or operation modified to prevent formation of such slurry. Any slurry which does run down the vertical edges shall be immediately removed. No slurry, concrete or concrete mortar shall be used to build up along the edges of the pavement to compensate for excessive edge slump, either while the concrete is plastic or after it hardens.

3.5.3 Surface Correction

While the concrete is still plastic, irregularities and marks in the pavement surface shall be eliminated by means of cutting straightedges, 10 to 12 feet in length. Depressions shall be filled with freshly mixed concrete, struck off, consolidated, and refinished. Projections above the required elevation shall also be struck off and refinished. Long-handled, flat "bull floats" shall be used sparingly and only as necessary to correct minor, scattered surface defects. Finishing with hand floats and trowels shall be held to the absolute minimum necessary. Joints and edges shall not be overfinished.

3.5.4 Hand Finishing

Hand finishing operations shall be used only for those unusual slabs as specified previously. Grate tampers (jitterbugs) shall not be used. As soon as placed and vibrated, the concrete shall be struck off and screeded. The surface shall be tamped with a strike-off and tamping screed, or vibratory screed. Immediately following the final tamping of the surface, the pavement shall be floated longitudinally. Long-handled, flat bull

floats shall be used sparingly and only as necessary to correct surface defects. Finishing with hand floats and trowels shall be held to the absolute minimum necessary. Joints and edges shall not be overfinished. No water shall be added to the pavement during finishing operations.

3.5.5 Texturing

Before the surface sheen has disappeared and before the concrete hardens, the surface of the pavement shall be given a texture as described herein. Following initial texturing on the first day of placement, the Placing Foreman, Contracting Officer representative, and a representative of the Using Agency shall inspect the texturing for compliance with design requirements. After curing is complete, all textured surfaces shall be thoroughly power broomed to remove all debris. The concrete in areas of recesses for tie-down anchors, lighting fixtures, and other outlets in the pavement shall be finished to provide a surface of the same texture as the surrounding area.

3.5.5.1 Fabric-Drag Surface Finish

Surface texture shall be applied by dragging the surface of the pavement, in the direction of the concrete placement, with a moist fabric drag. The dragging shall produce a uniform finished surface having a fine sandy texture without disfiguring marks.

3.5.5.2 Broom Texturing

Surface texture shall be applied using a mechanical stiff bristle broom drag of a type that will uniformly score the surface transverse to the pavement center line. The broom shall be capable of traversing the full width of the pavement in a single pass at a uniform speed and with a uniform pressure. Successive passes of the broom shall be overlapped the minimum necessary to obtain a uniformly textured surface. The scores should be uniform in appearance and approximately 1/16 inchin depth but not more than 1/8 inch in depth. Hand brooming will be permitted only on isolated odd shaped slabs or slabs where hand finishing is permitted.

3.5.6 Edging

After texturing has been completed, the edge of the slabs along the forms shall be carefully finished with an edging tool to form a smooth rounded surface of 1/8 inch radius. No water shall be added to the surface during edging.

3.6 CURING

Concrete shall be continuously protected against loss of moisture and rapid temperature changes for at least 7 days from the completion of finishing operations. Unhardened concrete shall be protected from rain and flowing water. During hot weather with low humidity and/or wind, the Contractor shall institute measures to prevent plastic shrinkage cracks from developing. ACI 305R contains means of predicting plastic shrinkage cracking and preventative measures. Plastic shrinkage cracks that occur shall be filled by injection of epoxy resin after the concrete hardens.

Plastic shrinkage cracks shall never be troweled over or filled with slurry. Curing shall be accomplished by one of the following methods.

3.6.1 Membrane Curing

A uniform coating of white-pigmented membrane-forming curing compound shall be applied to the entire exposed surface of the concrete including pavement edges as soon as the free water has disappeared from the surface after finishing. If evaporation is high and no moisture is present on the surface even though bleeding has not stopped, fog sprays shall be used to keep the surface moist until setting of the cement occurs. Curing compound shall then be immediately applied. Curing compound shall be applied to the finished surfaces by means of a self-propelled automatic spraying machine, equipped with multiple spraying nozzles with wind shields, spaning the newly paved lane. The curing compound shall be applied at a maximum application rate of 200 square feet per gallon. The application of curing compound by hand-operated, mechanical powered pressure sprayers will be permitted only on odd widths or shapes of slabs where indicated and on concrete surfaces exposed by the removal of forms. The compound shall form a uniform, continuous, cohesive film that will not check, crack, or peel and that will be free from pinholes and other discontinuities. Areas where the curing compound develops the above defects or is damaged by heavy rainfall, sawing or other construction operations within the curing period, shall be immediately resprayed.

3.6.2 Moist Curing

Concrete to be moist-cured shall be maintained continuously wet for the entire curing period, commencing immediately after finishing. Surfaces shall be cured by ponding, by continuous sprinkling, by continuously saturated burlap or cotton mats, or by continuously saturated plastic coated burlap. Impervious sheet curing shall not be used.

3.7 JOINTS

No deviation from the jointing pattern shown on the drawings shall be made without written approval of the Design District Pavement or Geotechnical Engineer. All joints shall be straight, perpendicular to the finished grade of the pavement, and continuous from edge to edge or end to end of the pavement with no abrupt offset and no gradual deviation greater than 1/2 inch.

3.7.1 Longitudinal Construction Joints

Dowels shall be installed in the longitudinal construction joints, or the edges shall be thickened as indicated. The dimensions of the keyway shall not vary more than plus or minus 1/8 inch from the dimensions indicated and shall not deviate more than plus or minus 1/4 inch from the mid-depth of the pavement. If any length of completed keyway of 5 feet or more fails to meet the above tolerances, dowels shall be installed.

3.7.2 Transverse Construction Joints

Transverse construction joints shall be installed at a planned transverse

joint, at the end of each day's placing operations and when concrete placement is interrupted. Transverse construction joints shall be constructed either by utilizing headers and hand placement and finishing techniques, or by placing concrete beyond the transverse construction joint location and then saw cutting full depth and removing concrete back to the transverse construction joint location. For the latter case, dowels shall be installed using methods for dowels installed in hardened concrete described above. All transverse construction joints shall be dowelled.

3.7.3 Expansion Joints

Expansion joints shall be formed where indicated, and about any structures and features that project through or into the pavement, using preformed joint filler of the type, thickness, and width indicated, and shall extend the full slab depth. Edges of the concrete at the joint face shall be edged. The joint filler strips shall be installed to form a recess at the pavement surface to be filled with joint sealant. Expansion joints shall be constructed with dowels or thickened edges for load transfer.

3.7.4 Slip Joints

Slip joints shall be installed the full depth of the slab using expansion joint preformed joint filler material attached to the face of the original concrete placement. A reservoir for joint sealant shall be constructed at the top of the joint. Edges of the joint face shall be edged.

3.7.5 Contraction Joints

Transverse and longitudinal contraction joints shall be of the weakened-plane or dummy type. Longitudinal contraction joints shall be constructed by sawing a groove in the hardened concrete with a power-driven saw. Transverse contraction joints shall be constructed in conformance with requirements for sawed joints and insert-type contraction joints.

3.7.5.1 Sawed Joints

Sawed contraction joints shall be constructed by sawing a groove in the concrete with a 1/8 inch blade to the indicated depth. The time of initial sawing shall vary depending on existing and anticipated weather conditions and shall be such as to prevent uncontrolled cracking of the pavement. Sawing of the joints shall commence as soon as the concrete has hardened sufficiently to permit cutting the concrete without chipping, spalling, or tearing. The joints shall be sawed at the required spacing consecutively in the sequence of the concrete placement. Sawing at a given joint location shall be discontinued when a crack develops ahead of the saw cut. Immediately after the joint is sawed, the saw cut and adjacent concrete surface shall be thoroughly flushed with water until all waste from sawing is removed from the joint. The surface shall be resprayed with curing compound as soon as free water disappears. The top of the joint opening and the joint groove at exposed edges shall be tightly sealed with cord or backer rod before the concrete in the region of the joint is resprayed with curing compound.

3.7.5.2 Insert-Type Joints

Insert-type joints shall not be used for slipformed pavements. Insert-type non-metallic contraction joints shall be constructed by installing a preformed insert in the plastic concrete to form a weakened plane to induce cracking. Inserts shall be installed using a machine equipped with a vibrating bar for cutting a groove in the plastic concrete for placement of the insert or for vibrating the insert into place at the prescribed joint location. The installed insert shall be perpendicular to the finished grade of the pavement, with the top of the insert not more than 1/8 inch below the pavement surface.

3.7.6 Thickened Edge Joints

Underlying material in the transition area shall meet the requirements for smoothness and compaction specified for all other areas of the underlying material.

3.8 REPAIR, REMOVAL, AND REPLACEMENT OF SLABS

New pavement slabs that contain full-depth cracks shall be removed and replaced, as specified herein at no cost to the Government. Removal and replacement shall be full depth, shall be full width of the paving lane, and the limit of removal shall be from each original transverse joint . The Contracting Officer will determine whether cracks extend full depth of the pavement and may require minimum 6 inch diameter cores to be drilled on the crack to determine depth of cracking. Cores shall be drilled and the hole later filled by the Contractor with a well consolidated concrete mixture bonded to the walls of the hole with epoxy resin. Drilling of cores and refilling holes shall be at no expense to the Government. Cracks that do not extend full depth of slab shall be cleaned and then pressure injected with epoxy resin, Type IV, Grade 1. The Contractor shall ensure that the crack is not widened during epoxy resin injection. Where a full depth crack intersects the original transverse joint, the slab(s) containing the crack shall be removed and replaced, with dowels installed, as required below. Spalls along joints shall be repaired as specified.

3.8.1 Removal and Replacement of Full Slabs

Unless there are keys or dowels present, all edges of the slab shall be sawcut full depth. If keys, dowels, or tie bars are present along any edges, these edges shall be sawed full depth 6 inches from the edge if only keys are present, or just beyond the end of dowels or tie bars if they are present. These joints shall then be carefully sawed on the joint line to within 1 inch of the depth of the dowel or key. The main slab shall be further divided by sawing full depth, at appropriate locations, and each piece lifted out and removed. The narrow strips along keyed or doweled edges shall be carefully broken up and removed. Care shall be taken to prevent damage to the dowels, tie bars, or keys or to concrete to remain in place. Protruding portions of dowels shall be painted and lightly oiled. The joint face below keys or dowels shall be suitably trimmed so that there is no abrupt offset. If underbreak occurs at any point along any edge, the area shall be hand-filled with concrete, producing an even joint face from top to bottom, before replacing the removed slab. If underbreak over 4 inches deep occurs, the entire slab containing the underbreak shall be

removed and replaced. Where there are no dowels, tie bars, or keys on an edge, or where they have been damaged, dowels of the size and spacing as specified for other joints in similar pavement shall be installed by epoxy grouting them into holes drilled into the existing concrete. Original damaged dowels or tie bars shall be cut off flush with the joint face. All four edges of the new slab shall thus contain dowels or original keys or original tie bars. Prior to placement of new concrete, the underlying material shall be graded and recompacted, and the surfaces of all four joint faces shall be cleaned of all loose material and contaminants, and coated with a double application of membrane forming curing compound as bond breaker. Placement of concrete shall be as specified for original construction. The resulting joints around the new slab shall be prepared and sealed as specified.

3.8.2 Repairing Spalls Along Joints

Spalls along joints and cracks shall be repaired by first making a vertical saw cut at least 1 inch outside the spalled area and to a depth of at least 2 inches. Saw cuts shall be straight lines forming rectangular areas. The concrete between the saw cut and the joint, or crack, shall be chipped out to remove all unsound concrete. The cavity shall be thoroughly cleaned with high pressure water jets supplemented with compressed air to remove all loose material. Immediately before filling the cavity, a prime coat shall be applied to the dry cleaned surface of all sides and bottom of the cavity, except any joint face. The prime coat shall be applied in a thin coating and scrubbed into the surface with a stiff-bristle brush. Prime coat for portland cement repairs shall be a neat cement grout and for epoxy resin repairs shall be epoxy resin, Type III, Grade 1. The cavity shall be filled with low slump portland cement concrete or mortar, or with epoxy resin concrete or mortar. Portland cement concrete shall be used for larger spalls, those more than 1/3 cu. ft. in size after removal operations; portland cement mortar shall be used for spalls between 0.03 and 1/3 cu. ft; and epoxy resin mortar or Type III, Grade 3 epoxy resin for those spalls less than 0.03 cu. ft. in size after removal operations. Portland cement concretes and mortars shall be very low slump mixtures, proportioned, mixed, placed, tamped, and cured. If the materials and procedures are approved in writing, latex modified concrete mixtures may be used for repairing spalls less than 1/3 cu.ft. in size. Epoxy resin mortars shall be made with Type III, Grade 1, epoxy resin, using proportions, mixing, placing, tamping and curing procedures as recommended by the manufacturer. Any repair material on the surrounding surfaces of the existing concrete shall be removed before it hardens. Where the spalled area abuts a joint, an insert or other bond-breaking medium shall be used to prevent bond at the joint face. A reservoir for the joint sealant shall be sawed to the dimensions required for other joints.

3.8.3 Areas Defective in Plan Grade or Smoothness

In areas not meeting the specified limits for surface smoothness and plan grade, high areas shall be reduced to attain the required smoothness and grade, except as depth is limited below. High areas shall be reduced by grinding the hardened concrete with a surface grinding machine after the concrete is 14 days or more old. The depth of grinding shall not exceed 1/4 inch. All pavement areas requiring plan grade or surface smoothness

corrections in excess of the specified limits, shall be removed and replaced. In pavement areas given a wire comb or tined texture, areas exceeding 25 square feet that have been corrected by rubbing or grinding shall be retextured by grooving machine sawn grooves meeting the requirements for the wire comb or tined texture. All areas in which grinding has been performed will be subject to the thickness tolerances specified in paragraph Thickness. Any grinding performed on individual slabs with excessive deficiencies shall be performed at the Contractor's own decision without entitlement to additional compensation if eventual removal of the slab is required.

3.9 EXISTING CONCRETE PAVEMENT REMOVAL AND REPAIR

Existing concrete pavement shall be removed as indicated and as specified in Section 02220 DEMOLITION modified, and expanded as specified herein. Removal, repair and replacement shall be made as indicated and as specified in paragraph REPAIR, REMOVAL, AND REPLACEMENT OR SLABS.

3.10 PAVEMENT PROTECTION

The Contractor shall protect the pavement against all damage prior to final acceptance of the work. Traffic shall be excluded from the new pavement. As a construction expedient in paving intermediate lanes between newly paved pilot lanes, operation of the hauling equipment will be permitted on the new pavement after the pavement has been cured for 7 days and the joints have been sealed or otherwise protected. All new and existing pavement carrying construction traffic or equipment shall be continuously kept completely clean. Special cleaning and care shall be used where Contractor's traffic uses or crosses active airfield pavement.

3.11 TESTING AND INSPECTION FOR CONTRACTOR QUALITY CONTROL (CQC)

Paragraph ACCEPTABILITY OF WORK contains additional CQC requirements. The Contractor shall perform the inspection and tests described below and, based upon the results of these inspections and tests, shall take the action required and submit reports as specified. When, in the opinion of the Contracting Officer, the paving operation is out of control, concrete placement shall cease.

3.11.1 Batch Plant Control

A daily report shall be prepared indicating checks made for scale accuracy with test weights, checks of batching accuracy, and corrective action taken prior to and during placement for weighing or batching, type and source of cement used, type and source of pozzolan or slag used, amount and source of admixtures used, aggregate source, the required aggregate and water masses per cubic yd, amount of water as free moisture in each size of aggregate, and the batch aggregate and water masses per cubic yd. for each class of concrete batched during each day's plant operation.

3.11.2 Concrete Mixture

a. Air Content Testing. Air content tests shall be made when test specimens are fabricated. In addition, at least two other tests

for air content shall be made on randomly selected batches of each separate concrete mixture produced during each 8-hour period of paving. Whenever air content reaches specified limits, an immediate confirmatory test shall be made. If the second test also shows air content at or exceeding specified limits, an adjustment shall immediately be made in the amount of air-entraining admixture batched to bring air content within specified limits. If the next adjusted batch of concrete is not within specified limits, concrete placement shall be halted until concrete air content is within specified limits.

b. Slump Testing. Slump tests shall be made when test specimens are fabricated. Additional tests shall be made when excessive variation in workability is reported by the placing foreman or Government inspector. Whenever slump approaches the maximum limit, an adjustment shall immediately be made in the batch masses of water and fine aggregate, without exceeding the maximum w/(c+p). When a slump result exceeds the specification limit, no further concrete shall be delivered to the paving site until adjustments have been made and slump is again within the limit.

c. Temperature. The temperature of the concrete shall be measured when strength specimens are fabricated.

d. Concrete Strength Testing. Four (4) cylinders from the same batch shall be fabricated, cured and tested for compressive strength, testing two cylinders at 7-day and two cylinders at 28-day age. A minimum of one set of four (4) cylinders shall be fabricated, cured and tested for each shift of concrete placement. Control charts for strength, showing the 7-day and 28-day CQC compressive strengths, and the 28-day required compressive strength, shall be maintained and submitted with weekly CQC Reports.

3.11.3 Inspection Before Placing

Underlying materials, joint locations and types, construction joint faces, forms, reinforcing, dowels, and embedded items shall be inspected by a Registered Engineer in sufficient time prior to each paving operation in order to certify to the Contracting Officer that they are ready to receive concrete. The results of each inspection shall be reported in writing, and the certification signed by the Registered Engineer, prior to each days' paving.

3.11.4 Paving Operations

The placing foreman shall supervise all placing and paving operations, shall determine that the correct quality of concrete is placed in each location as shown, shall insure that the concrete is consolidated full depth and that finishing is performed as specified. The placing foreman shall be responsible for measuring and recording concrete temperatures and ambient temperature hourly during placing operations, weather conditions, time of placement, volume of concrete placed, and method of paving and any problems encountered.

3.11.5 Curing Inspection

a. Moist Curing Inspections. Each day on both work and non-work days, an inspection shall be made of all areas subject to moist curing. The surface moisture condition shall be noted and recorded. When any inspection finds an area of inadequate curing, immediate corrective action shall be taken, and the required curing period for the area shall be extended by 1 day.

b. Membrane Curing Inspection. At the end of each day's placement, the CQC Representative shall determine the quantity of compound used by measurement of the container; shall determine the area of concrete surface covered; shall then compute the rate of coverage in square feet per gallon and shall also note whether or not coverage is uniform. When the coverage rate of the curing compound is less than that specified or when the coverage is not uniform, the entire surface shall be sprayed again.

3.11.6 Cold-Weather Protection

At least once per day, an inspection shall be made of all areas subject to cold-weather protection. Any deficiencies shall be noted, corrected, and reported.

3.11.7 Reports

All results of tests or inspections conducted shall be reported informally as they are completed and in writing daily. A weekly report, signed by a registered engineer, shall be prepared for the updating of control charts and test data, and all CQC inspections and actions covering the entire period from the start of the construction through the current week. Reports of failures and the action taken shall be confirmed in writing in the routine reports. The Contracting Officer has the right to examine all CQC records. A copy of weekly reports shall be faxed to the Design District Pavement or Geotechnical Engineer. At the completion of concrete placement, a certification report shall be prepared containing mix designs, all updated control charts and concrete test data, quality control reports, smoothness reports, and other pertinent data on the concrete, with a certification by a registered engineer that the concrete placed meets all specification requirements. A copy of the certification report shall be mailed to the Design District pavement or Geotechnical Engineer.

-- End of Section --

SECTION TABLE OF CONTENTS

DIVISION 02 - SITE WORK

SECTION 02770

CONCRETE SIDEWALKS AND CURBS AND GUTTERS

03/98

PART 1 GENERAL

1.1 REFERENCES
1.2 OMITTED
1.3 OMITTED
1.4 SUBMITTALS
1.5 WEATHER LIMITATIONS
1.5.1 Placing During Cold Weather
1.5.2 Placing During Warm Weather
1.6 PLANT, EQUIPMENT, MACHINES, AND TOOLS
1.6.1 General Requirements
1.6.2 Slip Form Equipment

PART 2 PRODUCTS

2.1 CONCRETE
2.1.1 Air Content
2.1.2 Slump
2.1.3 Reinforcement Steel
2.2 CONCRETE CURING MATERIALS
2.2.1 Impervious Sheet Materials
2.2.2 Burlap
2.2.3 White Pigmented Membrane-Forming Curing Compound
2.3 CONCRETE PROTECTION MATERIALS
2.4 JOINT FILLER STRIPS
2.4.1 Contraction Joint Filler for Curb and Gutter
2.4.2 Expansion Joint Filler, Premolded
2.5 JOINT SEALANTS
2.5.1 Joint Sealant, Cold-Applied
2.5.2 Joint Sealant, Hot-Poured
2.6 FORM WORK
2.6.1 Sidewalk Forms
2.6.2 Curb and Gutter Forms

PART 3 EXECUTION

3.1 SUBGRADE PREPARATION
3.1.1 Sidewalk Subgrade
3.1.2 Curb and Gutter Subgrade
3.1.3 Maintenance of Subgrade
3.2 FORM SETTING
3.2.1 Sidewalks
3.2.2 Curbs and Gutters

3.3 SIDEWALK CONCRETE PLACEMENT AND FINISHING
3.3.1 Formed Sidewalks
3.3.2 Concrete Finishing
3.3.3 Edge and Joint Finishing
3.3.4 Surface and Thickness Tolerances
3.4 CURB AND GUTTER CONCRETE PLACEMENT AND FINISHING
3.4.1 Formed Curb and Gutter
3.4.2 Curb and Gutter Finishing
3.4.3 Concrete Finishing
3.4.4 Joint Finishing
3.4.5 Surface and Thickness Tolerances
3.5 SIDEWALK JOINTS
3.5.1 Sidewalk Contraction Joints
3.5.2 Sidewalk Expansion Joints
3.6 CURB AND GUTTER JOINTS
3.6.1 Contraction Joints
3.6.2 Expansion Joints
3.7 CURING AND PROTECTION
3.7.1 General Requirements
3.7.1.1 Mat Method
3.7.1.2 Impervious Sheeting Method
3.7.1.3 Membrane Curing Method
3.7.2 Backfilling
3.7.3 Protection
3.7.4 Protective Coating
3.7.4.1 Application
3.7.4.2 Precautions
3.8 FIELD QUALITY CONTROL
3.8.1 General Requirements
3.8.2 Concrete Testing
3.8.2.1 Strength Testing
3.8.2.2 Air Content
3.8.2.3 Slump Test
3.8.3 Thickness Evaluation
3.8.4 Surface Evaluation
3.9 SURFACE DEFICIENCIES AND CORRECTIONS
3.9.1 Thickness Deficiency
3.9.2 High Areas
3.9.3 Appearance

-- End of Section Table of Contents --

CEGS-02770 (March 1998)

Includes changes through Notice 1 (April 1999)

SECTION 02770

CONCRETE SIDEWALKS AND CURBS AND GUTTERS
03/98

PART 1 GENERAL

1.1 REFERENCES

The publications listed below form a part of this specification to the extent referenced. The publications are referred to in the text by basic designation only.

AMERICAN ASSOCIATION OF STATE HIGHWAY AND TRANSPORTATION OFFICIALS (AASHTO)

AASHTO M 182	(1991) Burlap Cloth Made from Jute or Kenaf

AMERICAN SOCIETY FOR TESTING AND MATERIALS (ASTM)

ASTM A 185	(1997) Steel Welded Wire Fabric, Plain, for Concrete Reinforcement
ASTM A 615/A 615M	(1996a) Deformed and Plain Billet-Steel Bars for Concrete Reinforcement
ASTM A 616/A 616M	(1996a) Rail-Steel Deformed and Plain Bars for Concrete Reinforcement
ASTM A 617/A 617M	(1996a) Axle-Steel Deformed and Plain Bars for Concrete Reinforcement
ASTM C 31/C 31M	(1996) Making and Curing Concrete Test Specimens in the Field
ASTM C 143	(1990a) Slump of Hydraulic Cement Concrete
ASTM C 171	(1997) Sheet Materials for Curing Concrete
ASTM C 172	(1997) Sampling Freshly Mixed Concrete
ASTM C 173	(1996) Air Content of Freshly Mixed Concrete by the Volumetric Method
ASTM C 231	(1997) Air Content of Freshly Mixed Concrete by the Pressure Method

ASTM C 309	(1997) Liquid Membrane-Forming Compounds for Curing Concrete
ASTM C 920	(1995) Elastomeric Joint Sealants
ASTM D 1751	(1983; R 1991) Preformed Expansion Joint Filler for Concrete Paving and Structural Construction (Nonextruding and Resilient Bituminous Types)
ASTM D 1752	(1984; R 1996) Preformed Sponge Rubber and Cork Expansion Joint Fillers for Concrete Paving and Structural Construction
ASTM D 3405	(1996) Joint Sealants, Hot-Applied, for Concrete and Asphalt Pavements

1.2 OMITTED

1.3 OMITTED

1.4 SUBMITTALS

Government approval is required for submittals with a "G" designation; submittals not having a "G" designation are for information only. When used, a designation following the "G" designation identifies the office that will review the submittal for the Government. The following shall be submitted in accordance with Section 01330 SUBMITTAL PROCEDURES:

SD-03 Product Data

Concrete

Copies of certified delivery tickets for all concrete used in the construction.

SD-06 Test Reports

Field Quality Control

Copies of all test reports within 24 hours of completion of the test.

1.5 WEATHER LIMITATIONS

1.5.1 Placing During Cold Weather

Concrete placement shall not take place when the air temperature reaches 40 degrees F and is falling, or is already below that point. Placement may begin when the air temperature reaches 35 degrees F and is rising, or is already above 40 degrees F. Provisions shall be made to protect the concrete from freezing during the specified curing period. If necessary to place concrete when the temperature of the air, aggregates, or water is below 35 degrees F, placement and protection shall be approved in writing.

Approval will be contingent upon full conformance with the following provisions. The underlying material shall be prepared and protected so that it is entirely free of frost when the concrete is deposited. Mixing water and aggregates shall be heated as necessary to result in the temperature of the in-place concrete being between 50 and 85 degrees F. Methods and equipment for heating shall be approved. The aggregates shall be free of ice, snow, and frozen lumps before entering the mixer. Covering and other means shall be provided for maintaining the concrete at a temperature of at least 50 degrees F for not less than 72 hours after placing, and at a temperature above freezing for the remainder of the curing period.

1.5.2 Placing During Warm Weather

The temperature of the concrete as placed shall not exceed 85 degrees F except where an approved retarder is used. The mixing water and/or aggregates shall be cooled, if necessary, to maintain a satisfactory placing temperature. The placing temperature shall not exceed 95 degrees F at any time.

1.6 PLANT, EQUIPMENT, MACHINES, AND TOOLS

1.6.1 General Requirements

Plant, equipment, machines, and tools used in the work shall be subject to approval and shall be maintained in a satisfactory working condition at all times. The equipment shall have the capability of producing the required product, meeting grade controls, thickness control and smoothness requirements as specified. Use of the equipment shall be discontinued if it produces unsatisfactory results. The Contracting Officer shall have access at all times to the plant and equipment to ensure proper operation and compliance with specifications.

1.6.2 Slip Form Equipment

Slip form paver or curb forming machine, will be approved based on trial use on the job and shall be self-propelled, automatically controlled, crawler mounted, and capable of spreading, consolidating, and shaping the plastic concrete to the desired cross section in 1 pass.

PART 2 PRODUCTS

2.1 CONCRETE

Concrete shall conform to the applicable requirements of Section 03300 CAST-IN-PLACE STRUCTURAL CONCRETE except as otherwise specified. Concrete shall have a minimum compressive strength of 3500 psi at 28 days. Maximum size of aggregate shall be 1-1/2 inches.

2.1.1 Air Content

Mixtures shall have air content by volume of concrete of 5 to 7 percent, based on measurements made immediately after discharge from the mixer.

2.1.2 Slump

The concrete slump shall be 2 inches plus or minus 1 inch where determined in accordance with ASTM C 143.

2.1.3 Reinforcement Steel

Reinforcement bars shall conform to ASTM A 615/A 615M, ASTM A 616/A 616M, or ASTM A 617/A 617M. Wire mesh reinforcement shall conform to ASTM A 185.

2.2 CONCRETE CURING MATERIALS

2.2.1 Impervious Sheet Materials

Impervious sheet materials shall conform to ASTM C 171, type optional, except that polyethylene film, if used, shall be white opaque.

2.2.2 Burlap

Burlap shall conform to AASHTO M 182.

2.2.3 White Pigmented Membrane-Forming Curing Compound

White pigmented membrane-forming curing compound shall conform to ASTM C 309, Type 2.

2.3 CONCRETE PROTECTION MATERIALS

Concrete protection materials shall be a linseed oil mixture of equal parts, by volume, of linseed oil and either mineral spirits, naphtha, or turpentine. At the option of the contractor, commercially prepared linseed oil mixtures, formulated specifically for application to concrete to provide protection against the action of deicing chemicals may be used, except that emulsified mixtures are not acceptable.

2.4 JOINT FILLER STRIPS

2.4.1 Contraction Joint Filler for Curb and Gutter

Contraction joint filler for curb and gutter shall consist of hard-pressed fiberboard.

2.4.2 Expansion Joint Filler, Premolded

Expansion joint filler, premolded, shall conform to ASTM D 1751 or ASTM D 1752, 3/8 inch thick, unless otherwise indicated.

2.5 JOINT SEALANTS

2.5.1 Joint Sealant, Cold-Applied

Joint sealant, cold-applied shall conform to ASTM C 920.

2.5.2 Joint Sealant, Hot-Poured

Joint sealant, hot-poured shall conform to ASTM D 3405.

2.6 FORM WORK

Form work shall be designed and constructed to ensure that the finished concrete will conform accurately to the indicated dimensions, lines, and elevations, and within the tolerances specified. Forms shall be of wood or steel, straight, of sufficient strength to resist springing during depositing and consolidating concrete. Wood forms shall be surfaced plank, 2 inches nominal thickness, straight and free from warp, twist, loose knots, splits or other defects. Wood forms shall have a nominal length of 10 feet. Radius bends may be formed with 3/4 inch boards, laminated to the required thickness. Steel forms shall be channel-formed sections with a flat top surface and with welded braces at each end and at not less than two intermediate points. Ends of steel forms shall be interlocking and self-aligning. Steel forms shall include flexible forms for radius forming, corner forms, form spreaders, and fillers. Steel forms shall have a nominal length of 10 feet with a minimum of 3 welded stake pockets per form. Stake pins shall be solid steel rods with chamfered heads and pointed tips designed for use with steel forms.

2.6.1 Sidewalk Forms

Sidewalk forms shall be of a height equal to the full depth of the finished sidewalk.

2.6.2 Curb and Gutter Forms

Curb and gutter outside forms shall have a height equal to the full depth of the curb or gutter. The inside form of curb shall have batter as indicated and shall be securely fastened to and supported by the outside form. Rigid forms shall be provided for curb returns, except that benders or thin plank forms may be used for curb or curb returns with a radius of 10 feet or more, where grade changes occur in the return, or where the central angle is such that a rigid form with a central angle of 90 degrees cannot be used. Back forms for curb returns may be made of 1-1/2 inch benders, for the full height of the curb, cleated together. In lieu of inside forms for curbs, a curb "mule" may be used for forming and finishing this surface, provided the results are approved.

PART 3 EXECUTION

3.1 SUBGRADE PREPARATION

The subgrade shall be constructed to the specified grade and cross section prior to concrete placement. Subgrade shall be placed and compacted in conformance with Section 02315, "EXCAVATION, FILLING AND BACKFILLING."

3.1.1 Sidewalk Subgrade

The subgrade shall be tested for grade and cross section with a template extending the full width of the sidewalk and supported between side forms.

3.1.2 Curb and Gutter Subgrade

The subgrade shall be tested for grade and cross section by means of a template extending the full width of the curb and gutter. The subgrade shall be of materials equal in bearing quality to the subgrade under the adjacent pavement.

3.1.3 Maintenance of Subgrade

The subgrade shall be maintained in a smooth, compacted condition in conformity with the required section and established grade until the concrete is placed. The subgrade shall be in a moist condition when concrete is placed. The subgrade shall be prepared and protected to produce a subgrade free from frost when the concrete is deposited.

3.2 FORM SETTING

Forms shall be set to the indicated alignment, grade and dimensions. Forms shall be held rigidly in place by a minimum of 3 stakes per form placed at intervals not to exceed 4 feet. Corners, deep sections, and radius bends shall have additional stakes and braces, as required. Clamps, spreaders, and braces shall be used where required to ensure rigidity in the forms. Forms shall be removed without injuring the concrete. Bars or heavy tools shall not be used against the concrete in removing the forms. Any concrete found defective after form removal shall be promptly and satisfactorily repaired. Forms shall be cleaned and coated with form oil each time before concrete is placed. Wood forms may, instead, be thoroughly wetted with water before concrete is placed, except that with probable freezing temperatures, oiling is mandatory.

3.2.1 Sidewalks

Forms for sidewalks shall be set with the upper edge true to line and grade with an allowable tolerance of 1/8 inch in any 10 foot long section. After forms are set, grade and alignment shall be checked with a 10 foot straightedge. Forms shall have a transverse slope as indicated with the low side adjacent to the roadway. Side forms shall not be removed for 12 hours after finishing has been completed.

3.2.2 Curbs and Gutters

The forms of the front of the curb shall be removed not less than 2 hours nor more than 6 hours after the concrete has been placed. Forms back of curb shall remain in place until the face and top of the curb have been finished, as specified for concrete finishing. Gutter forms shall not be removed while the concrete is sufficiently plastic to slump in any direction.

3.3 SIDEWALK CONCRETE PLACEMENT AND FINISHING

3.3.1 Formed Sidewalks

Concrete shall be placed in the forms in one layer. When consolidated and finished, the sidewalks shall be of the thickness indicated. After

concrete has been placed in the forms, a strike-off guided by side forms shall be used to bring the surface to proper section to be compacted. The concrete shall be consolidated with an approved vibrator, and the surface shall be finished to grade with a strike off.

3.3.2 Concrete Finishing

After straightedging, when most of the water sheen has disappeared, and just before the concrete hardens, the surface shall be finished with a wood float or darby to a smooth and uniformly fine granular or sandy texture free of waves, irregularities, or tool marks. A scored surface shall be produced by brooming with a fiber-bristle brush in a direction transverse to that of the traffic, followed by edging.

3.3.3 Edge and Joint Finishing

All slab edges, including those at formed joints, shall be finished with an edger having a radius of 1/8 inch. Transverse joint shall be edged before brooming, and the brooming shall eliminate the flat surface left by the surface face of the edger. Corners and edges which have crumbled and areas which lack sufficient mortar for proper finishing shall be cleaned and filled solidly with a properly proportioned mortar mixture and then finished.

3.3.4 Surface and Thickness Tolerances

Finished surfaces shall not vary more than 5/16 inch from the testing edge of a 10-foot straightedge. Permissible deficiency in section thickness will be up to 1/4 inch.

3.4 CURB AND GUTTER CONCRETE PLACEMENT AND FINISHING

3.4.1 Formed Curb and Gutter

Concrete shall be placed to the section required in a single lift. Consolidation shall be achieved by using approved mechanical vibrators. Curve shaped gutters shall be finished with a standard curb "mule".

3.4.2 Curb and Gutter Finishing

Approved slipformed curb and gutter machines may be used in lieu of hand placement.

3.4.3 Concrete Finishing

Exposed surfaces shall be floated and finished with a smooth wood float until true to grade and section and uniform in texture. Floated surfaces shall then be brushed with a fine-hair brush with longitudinal strokes. The edges of the gutter and top of the curb shall be rounded with an edging tool to a radius of 1/2 inch. Immediately after removing the front curb form, the face of the curb shall be rubbed with a wood or concrete rubbing block and water until blemishes, form marks, and tool marks have been removed. The front curb surface, while still wet, shall be brushed in the same manner as the gutter and curb top. The top surface of gutter and

entrance shall be finished to grade with a wood float.

3.4.4 Joint Finishing

Curb edges at formed joints shall be finished as indicated.

3.4.5 Surface and Thickness Tolerances

Finished surfaces shall not vary more than 1/4 inch from the testing edge of a 10-foot straightedge. Permissible deficiency in section thickness will be up to 1/4 inch.

3.5 SIDEWALK JOINTS

Sidewalk joints shall be constructed to divide the surface into rectangular areas. Transverse contraction joints shall be spaced at a distance equal to the sidewalk width or 5 feet on centers, whichever is less, and shall be continuous across the slab. Longitudinal contraction joints shall be constructed along the centerline of all sidewalks 10 feet or more in width. Transverse expansion joints shall be installed at sidewalk returns and opposite expansion joints in adjoining curbs. Where the sidewalk is not in contact with the curb, transverse expansion joints shall be installed as indicated. Expansion joints shall be formed about structures and features which project through or into the sidewalk pavement, using joint filler of the type, thickness, and width indicated.

3.5.1 Sidewalk Contraction Joints

The contraction joints shall be formed in the fresh concrete by cutting a groove in the top portion of the slab to a depth of at least one-fourth of the sidewalk slab thickness, using a jointer to cut the groove, or by sawing a groove in the hardened concrete with a power-driven saw, unless otherwise approved. Sawed joints shall be constructed by sawing a groove in the concrete with a 1/8 inch blade to the depth indicated. An ample supply of saw blades shall be available on the job before concrete placement is started, and at least one standby sawing unit in good working order shall be available at the jobsite at all times during the sawing operations.

3.5.2 Sidewalk Expansion Joints

Expansion joints shall be formed with 3/8 inch joint filler strips. Joint filler shall be placed with top edge 1/4 inch below the surface and shall be held in place with steel pins or other devices to prevent warping of the filler during floating and finishing. Immediately after finishing operations are completed, joint edges shall be rounded with an edging tool having a radius of 1/8 inch, and concrete over the joint filler shall be removed. At the end of the curing period, expansion joints shall be cleaned and filled with joint sealant. The joint opening shall be thoroughly cleaned before the sealing material is placed. Sealing material shall not be spilled on exposed surfaces of the concrete. Concrete at the joint shall be surface dry and atmospheric and concrete temperatures shall be above 50 degrees F at the time of application of joint sealing material. Excess material on exposed surfaces of the concrete shall be

removed immediately and concrete surfaces cleaned.

3.6 CURB AND GUTTER JOINTS

Curb and gutter joints shall be constructed at right angles to the line of curb and gutter.

3.6.1 Contraction Joints

Contraction joints shall be constructed directly opposite contraction joints in abutting portland cement concrete pavements and spaced so that monolithic sections between curb returns will not be less than 5 feet nor greater than 15 feet in length. Contraction joints shall be constructed by means of 1/8 inch thick separators and of a section conforming to the cross section of the curb and gutter. Separators shall be removed as soon as practicable after concrete has set sufficiently to preserve the width and shape of the joint and prior to finishing.

3.6.2 Expansion Joints

Expansion joints shall be formed by means of preformed expansion joint filler material cut and shaped to the cross section of curb and gutter. Expansion joints shall be provided in curb and gutter directly opposite expansion joints of abutting portland cement concrete pavement, and shall be of the same type and thickness as joints in the pavement. Where curb and gutter do not abut portland cement concrete pavement, expansion joints at least 3/8 inch in width shall be provided at intervals not exceeding 15 feet. Expansion joints shall be provided in nonreinforced concrete gutter at locations indicated. Expansion joints shall be sealed immediately following curing of the concrete or as soon thereafter as weather conditions permit. Expansion joints and the top 1 inch depth of curb and gutter contraction-joints shall be sealed with joint sealant. The joint opening shall be thoroughly cleaned before the sealing material is placed. Sealing material shall not be spilled on exposed surfaces of the concrete. Concrete at the joint shall be surface dry and atmospheric and concrete temperatures shall be above 50 degrees F at the time of application of joint sealing material. Excess material on exposed surfaces of the concrete shall be removed immediately and concrete surfaces cleaned.

3.7 CURING AND PROTECTION

3.7.1 General Requirements

Concrete shall be protected against loss of moisture and rapid temperature changes for at least 7 days from the beginning of the curing operation. Unhardened concrete shall be protected from rain and flowing water. All equipment needed for adequate curing and protection of the concrete shall be on hand and ready for use before actual concrete placement begins. Protection shall be provided as necessary to prevent cracking of the pavement due to temperature changes during the curing period.

3.7.1.1 Mat Method

The entire exposed surface shall be covered with 2 or more layers of

burlap. Mats shall overlap each other at least 6 inches.The mat shall be thoroughly wetted with water prior to placing on concrete surface and shall be kept continuously in a saturated condition and in intimate contact with concrete for not less than 7 days.

3.7.1.2 Impervious Sheeting Method

The entire exposed surface shall be wetted with a fine spray of water and then covered with impervious sheeting material. Sheets shall be laid directly on the concrete surface with the light-colored side up and overlapped 12 inches when a continuous sheet is not used. The curing medium shall not be less than 18-inches wider than the concrete surface to be cured, and shall be securely weighted down by heavy wood planks, or a bank of moist earth placed along edges and laps in the sheets. Sheets shall be satisfactorily repaired or replaced if torn or otherwise damaged during curing. The curing medium shall remain on the concrete surface to be cured for not less than 7 days.

3.7.1.3 Membrane Curing Method

A uniform coating of white-pigmented membrane-curing compound shall be applied to the entire exposed surface of the concrete as soon after finishing as the free water has disappeared from the finished surface. Formed surfaces shall be coated immediately after the forms are removed and in no case longer than 1 hour after the removal of forms. Concrete shall not be allowed to dry before the application of the membrane. If any drying has occurred, the surface of the concrete shall be moistened with a fine spray of water and the curing compound applied as soon as the free water disappears. Curing compound shall be applied in two coats by hand-operated pressure sprayers at a coverage of approximately 200 square feet per gallon for the total of both coats. The second coat shall be applied in a direction approximately at right angles to the direction of application of the first coat. The compound shall form a uniform, continuous, coherent film that will not check, crack, or peel and shall be free from pinholes or other imperfections. If pinholes, abrasion, or other discontinuities exist, an additional coat shall be applied to the affected areas within 30 minutes. Concrete surfaces that are subjected to heavy rainfall within 3 hours after the curing compound has been applied shall be resprayed by the method and at the coverage specified above. Areas where the curing compound is damaged by subsequent construction operations within the curing period shall be resprayed. Necessary precautions shall be taken to insure that the concrete is properly cured at sawed joints, and that no curing compound enters the joints. The top of the joint opening and the joint groove at exposed edges shall be tightly sealed before the concrete in the region of the joint is resprayed with curing compound. The method used for sealing the joint groove shall prevent loss of moisture from the joint during the entire specified curing period. Approved standby facilities for curing concrete pavement shall be provided at a location accessible to the jobsite for use in the event of mechanical failure of the spraying equipment or other conditions that might prevent correct application of the membrane-curing compound at the proper time. Concrete surfaces to which membrane-curing compounds have been applied shall be adequately protected during the entire curing period from pedestrian and vehicular traffic, except as required for joint-sawing operations and

surface tests, and from any other possible damage to the continuity of the membrane.

3.7.2 Backfilling

After curing, debris shall be removed and the area adjoining the concrete shall be backfilled, graded, and compacted to conform to the surrounding area in accordance with lines and grades indicated.

3.7.3 Protection

Completed concrete shall be protected from damage until accepted. The Contractor shall repair damaged concrete and clean concrete discolored during construction. Concrete that is damaged shall be removed and reconstructed for the entire length between regularly scheduled joints. Refinishing the damaged portion will not be acceptable. Removed damaged portions shall be disposed of as directed.

3.7.4 Protective Coating

Protective coating of linseed oil mixture shall be applied to the exposed-to-view concrete surface.

3.7.4.1 Application

Curing and backfilling operation shall be completed prior to applying two coats of protective coating. Concrete shall be surface dry and clean before each application. Coverage shall be by spray application at not more than 50 square yards per gallon for first application and not more than 70 square yards per gallon for second application, except that the number of applications and coverage for each application for commercially prepared mixture shall be in accordance with the manufacturer's instructions. Coated surfaces shall be protected from vehicular and pedestrian traffic until dry.

3.7.4.2 Precautions

Protective coating shall not be heated by direct application of flame or electrical heaters and shall be protected from exposure to open flame, sparks, and fire adjacent to open containers or applicators. Material shall not be applied at ambient or material temperatures lower than 50 degrees F.

3.8 FIELD QUALITY CONTROL

3.8.1 General Requirements

The Contractor shall perform the inspection and tests described and meet the specified requirements for inspection details and frequency of testing. Based upon the results of these inspections and tests, the Contractor shall take the action and submit reports as required below, and any additional tests to insure that the requirements of these specifications are met.

3.8.2 Concrete Testing

3.8.2.1 Strength Testing

The Contractor shall provide molded concrete specimens for strength tests. Samples of concrete placed each day shall be taken not less than once a day nor less than once for every 250 cubic yards of concrete. The samples for strength tests shall be taken in accordance with ASTM C 172. Cylinders for acceptance shall be molded in conformance with ASTM C 31/C 31M by an approved testing laboratory. Each strength test result shall be the average of 2 test cylinders from the same concrete sample tested at 28 days, unless otherwise specified or approved. Concrete specified on the basis of compressive strength will be considered satisfactory if the averages of all sets of three consecutive strength test results equal or exceed the specified strength, and no individual strength test result falls below the specified strength by more than 500 psi.

3.8.2.2 Air Content

Air content shall be determined in accordance with ASTM C 173 or ASTM C 231. ASTM C 231 shall be used with concretes and mortars made with relatively dense natural aggregates. Two tests for air content shall be made on randomly selected batches of each class of concrete placed during each shift. Additional tests shall be made when excessive variation in concrete workability is reported by the placing foreman or the Government inspector. If results are out of tolerance, the placing foreman shall be notified and he shall take appropriate action to have the air content corrected at the plant. Additional tests for air content will be performed on each truckload of material until such time as the air content is within the tolerance specified.

3.8.2.3 Slump Test

Two slump tests shall be made on randomly selected batches of each class of concrete for every 250 cubic yards, or fraction thereof, of concrete placed during each shift. Additional tests shall be performed when excessive variation in the workability of the concrete is noted or when excessive crumbling or slumping is noted along the edges of slip-formed concrete.

3.8.3 Thickness Evaluation

The anticipated thickness of the concrete shall be determined prior to placement by passing a template through the formed section or by measuring the depth of opening of the extrusion template of the curb forming machine. If a slip form paver is used for sidewalk placement, the subgrade shall be true to grade prior to concrete placement and the thickness will be determined by measuring each edge of the completed slab.

3.8.4 Surface Evaluation

The finished surface of each category of the completed work shall be uniform in color and free of blemishes and form or tool marks.

3.9 SURFACE DEFICIENCIES AND CORRECTIONS

3.9.1 Thickness Deficiency

When measurements indicate that the completed concrete section is deficient in thickness by more than 1/4 inch the deficient section will be removed, between regularly scheduled joints, and replaced.

3.9.2 High Areas

In areas not meeting surface smoothness and plan grade requirements, high areas shall be reduced either by rubbing the freshly finished concrete with carborundum brick and water when the concrete is less than 36 hours old or by grinding the hardened concrete with an approved surface grinding machine after the concrete is 36 hours old or more. The area corrected by grinding the surface of the hardened concrete shall not exceed 5 percent of the area of any integral slab, and the depth of grinding shall not exceed 1/4 inch. Pavement areas requiring grade or surface smoothness corrections in excess of the limits specified above shall be removed and replaced.

3.9.3 Appearance

Exposed surfaces of the finished work will be inspected by the Government and any deficiencies in appearance will be identified. Areas which exhibit excessive cracking, discoloration, form marks, or tool marks or which are otherwise inconsistent with the overall appearances of the work shall be removed and replaced.

-- End of Section --

SECTION TABLE OF CONTENTS

DIVISION 02 - SITE WORK

SECTION 02921

SEEDING

06/98

PART 1 GENERAL

1.1 REFERENCES
1.2 SUBMITTALS
1.3 SOURCE INSPECTION
1.4 DELIVERY, INSPECTION, STORAGE, AND HANDLING
1.4.1 Delivery
1.4.1.1 Delivered Topsoil
1.4.1.2 Soil Amendments
1.4.1.3 Pesticides
1.4.2 Inspection
1.4.3 Storage
1.4.4 Handling
1.4.5 Time Limitation

PART 2 PRODUCTS

2.1 SEED
2.1.1 Seed Classification
2.1.2 Permanent Seed Species and Mixtures
2.1.3 Omitted
2.1.4 Quality
2.1.5 Seed Mixing
2.1.6 Substitutions
2.2 TOPSOIL
2.3 SOIL AMENDMENTS
2.3.1 pH Adjuster
2.3.1.1 Limestone
2.3.1.2 Hydrated Lime
2.3.1.3 Burnt Lime
2.3.2 Fertilizer
2.3.3 Nitrogen Carrier Fertilizer
2.3.4 Organic Material
2.3.4.1 Bonemeal
2.3.4.2 Rotted Manure
2.3.4.3 Decomposed Wood Derivatives
2.3.4.4 Recycled Compost
2.3.4.5 Worm Castings
2.3.5 Soil Conditioner
2.3.5.1 Sand
2.3.5.2 Super Absorbent Polymers
2.3.5.3 Calcined Clay
2.3.5.4 Gypsum

2.3.5.5 Expanded Shale, Clay, or Slate (ESCS)
2.4 MULCH
2.4.1 Straw
2.4.2 Hay
2.4.3 Wood Cellulose Fiber
2.4.4 Paper Fiber
2.5 OMITTED
2.6 WATER
2.7 PESTICIDE
2.8 SURFACE EROSION CONTROL MATERIAL
2.8.1 Surface Erosion Control Blanket
2.8.2 Surface Erosion Control Fabric
2.8.3 Surface Erosion Control Net
2.8.4 Surface Erosion Control Chemicals
2.8.5 Hydrophilic Colloids
2.8.6 Erosion Control Material Anchors

PART 3 EXECUTION

3.1 INSTALLING SEED TIME AND CONDITIONS
3.1.1 Seeding Time
3.1.2 Seeding Conditions
3.1.3 Equipment Calibration
3.1.4 Soil Test
3.2 SITE PREPARATION
3.2.1 Finished Grade and Topsoil
3.2.2 Application of Soil Amendments
3.2.2.1 Applying pH Adjuster
3.2.2.2 Applying Fertilizer
3.2.2.3 Applying Soil Conditioner
3.2.2.4 Applying Super Absorbent Polymers
3.2.3 Tillage
3.2.4 Prepared Surface
3.2.4.1 Preparation
3.2.4.2 Lawn Area Debris
3.2.4.3 Field Area Debris
3.2.4.4 Protection
3.3 INSTALLATION
3.3.1 Installing Seed
3.3.1.1 Broadcast Seeding
3.3.1.2 Rolling
3.3.2 Omitted
3.3.3 Mulching
3.3.3.1 Hay or Straw Mulch
3.3.3.2 Mechanical Anchor
3.3.3.3 Omitted
3.3.3.4 Non-Asphaltic Tackifier
3.3.3.5 Omitted
3.3.3.6 Wood Cellulose Fiber, Paper Fiber, and Recycled Paper
3.3.4 Watering Seed
3.4 SURFACE EROSION CONTROL
3.4.1 Surface Erosion Control Material
3.4.2 Omitted
3.5 QUANTITY CHECK

3.6 APPLICATION OF PESTICIDE
3.6.1 Technical Representative
3.6.2 Application
3.7 RESTORATION AND CLEAN UP
3.7.1 Restoration
3.7.2 Clean Up
3.8 PROTECTION OF INSTALLED AREAS
3.9 SEED ESTABLISHMENT PERIOD
3.9.1 Commencement
3.9.2 Satisfactory Stand of Grass Plants
3.9.2.1 Lawn Area
3.9.2.2 Field Area
3.9.3 Maintenance During Establishment Period
3.9.3.1 Mowing
3.9.3.2 Post-Fertilization
3.9.3.3 Pesticide Treatment
3.9.3.4 Repair or Reinstall
3.9.3.5 Maintenance Record

-- End of Section Table of Contents --

CEGS-02921 (June 1998)

SECTION 02921

SEEDING
06/98

PART 1 GENERAL

1.1 REFERENCES

The publications listed below form a part of this specification to the extent referenced. The publications are referred to in the text by basic designation only.

AGRICULTURAL MARKETING SERVICE (AMS)

AMS-01	(Aug 95) Federal Seed Act Regulations Part 201

AMERICAN SOCIETY FOR TESTING AND MATERIALS (ASTM)

ASTM C 602	(1995a) Agricultural Liming Materials
ASTM D 4972	(1995a) pH of Soils
ASTM D 5268	(1992; R 1996) Topsoil Used for Landscaping Purposes
ASTM D 5883	(1996) Standard Guide for Use of Rotary Kiln Produced Expanded Shale, Clay or Slate (ESCS) as a Mineral Amendment in Topsoil Used for Landscaping and Related Purposes

1.2 SUBMITTALS

Government approval is required for submittals with a "G" designation; submittals not having a "G" designation are for information only. When used, a designation following the "G" designation identifies the office that will review the submittal for the Government. The following shall be submitted in accordance with Section 01330 SUBMITTAL PROCEDURES:

SD-03 Product Data

Equipment
Chemical Treatment Material

Manufacturer's literature including physical characteristics, application and installation instructions for equipment, surface erosion control material and chemical treatment material.

Equipment

A listing of equipment to be used for the seeding operation.

Delivery;

Delivery schedule.

Finished Grade and Topsoil

Finished grade status.

Topsoil

Availability of topsoil from the stripping and stock piling operation.

Quantity Check

Bag count or bulk weight measurements of material used compared with area covered to determine the application rate and quantity installed.

Seed Establishment Period

Calendar time period for the seed establishment period. When there is more than one seed establishment period, the boundaries of the seeded area covered for each period shall be described.

Maintenance Record

Maintenance work performed, area repaired or reinstalled, diagnosis for unsatisfactory stand of grass plants.

Application of Pesticide

Pesticide treatment plan with sequence of treatment work with dates and times. The pesticide trade name, EPA registration number, chemical composition, formulation, concentration of original and diluted material, application rate of active ingredients, method of application, area treated, amount applied; and the name and state license number of the state certified applicator shall be included.

SD-06 Test Reports

Soil Test

Certified reports of inspections and laboratory tests, prepared by an independent testing agency, including analysis and interpretation of test results. Each report shall be properly identified. Test methods used and compliance with recognized test standards shall be described.

SD-07 Certificates

Seed
pH Adjuster
Fertilizer
Asphalt Adhesive
Pesticide

Prior to the delivery of materials, certificates of compliance attesting that materials meet the specified requirements. Certified copies of the material certificates shall include the following:

a. Seed. Classification, botanical name, common name, percent pure live seed, minimum percent germination and hard seed, maximum percent weed seed content, and date tested.

b. pH Adjuster. Calcium carbonate equivalent and sieve analysis.

c. Fertilizer. Chemical analysis and composition percent.

d. Asphalt Adhesive: Composition.

e. Pesticide. EPA registration number and registered uses.

1.3 SOURCE INSPECTION

The source of delivered topsoil shall be subject to inspection.

1.4 DELIVERY, INSPECTION, STORAGE, AND HANDLING

1.4.1 Delivery

A delivery schedule shall be provided at least 10 calendar days prior to the first day of delivery.

1.4.1.1 Delivered Topsoil

Prior to the delivery of any topsoil, its availability shall be verified in paragraph TOPSOIL. A soil test shall be provided for topsoil delivered to the site.

1.4.1.2 Soil Amendments

Soil amendments shall be delivered to the site in the original, unopened containers bearing the manufacturer's chemical analysis. In lieu of containers, soil amendments may be furnished in bulk. A chemical analysis shall be provided for bulk deliveries.

1.4.1.3 Pesticides

Pesticide material shall be delivered to the site in the original, unopened

containers bearing legible labels indicating the EPA registration number and the manufacturer's registered uses.

1.4.2 Inspection

Seed shall be inspected upon arrival at the job site for conformity to species and quality. Seed that is wet, moldy, or bears a test date five months or older, shall be rejected. Other materials shall be inspected for compliance with specified requirements. The following shall be rejected: open soil amendment containers or wet soil amendments; topsoil that contains slag, cinders, stones, lumps of soil, sticks, roots, trash or other material over a minimum 1-1/2 inch diameter; and topsoil that contains viable plants and plant parts. Unacceptable materials shall be removed from the job site.

1.4.3 Storage

Materials shall be stored in designated areas. Seed, lime, and fertilizer shall be stored in cool, dry locations away from contaminants. Chemical treatment material shall be stored according to manufacturer's instructions and not with seeding operation materials.

1.4.4 Handling

Except for bulk deliveries, materials shall not be dropped or dumped from vehicles.

1.4.5 Time Limitation

Hydroseeding time limitation for holding seed in the slurry shall be a maximum 24 hours.

PART 2 PRODUCTS

2.1 SEED

2.1.1 Seed Classification

State-approved seed of the latest season's crop shall be provided in original sealed packages bearing the producer's guaranteed analysis for percentages of mixture, purity, germination, hard seed, weed seed content, and inert material. Labels shall be in conformance with AMS-01 and applicable state seed laws.

2.1.2 Permanent Seed Species and Mixtures

Permanent seed species and mixtures shall be proportioned by weight as follows:

Botanical Name	Common Name	Mixture Percent by Weight	Percent Pure Live Seed
EREMOCHLOA OPHIUROIDES	CENTIPEDE	95	88

2.1.3 Omitted

2.1.4 Quality

Weed seed shall be a maximum 1 percent by weight of the total mixture.

2.1.5 Seed Mixing

The mixing of seed may be done by the seed supplier prior to delivery, or on site as directed.

2.1.6 Substitutions

Substitutions will not be allowed without written request and approval from the Contracting Officer.

2.2 TOPSOIL

Topsoil shall be as defined in ASTM D 5268. When available, the topsoil shall be the existing surface soil stripped and stockpiled onsite in accordance with Section 02300 EARTHWORK. When additional topsoil is required beyond the available topsoil from the stripping operation, topsoil shall be delivered and amended as recommended by the soil test for the seed specified. Topsoil shall be free from slag, cinders, stones, lumps of soil, sticks, roots, trash or other material over a minimum 1-1/2 inch diameter. Topsoil shall be free from viable plants and plant parts.

2.3 SOIL AMENDMENTS

Soil amendments shall consist of pH adjuster, fertilizer, organic material and soil conditioners meeting the following requirements. Vermiculite shall not be used.

2.3.1 pH Adjuster

The pH adjuster shall be an agricultural liming material in accordance with ASTM C 602. These materials may be burnt lime, hydrated lime, ground limestone, sulfur, or shells. The pH adjuster shall be used to create a favorable soil pH for the plant material specified.

2.3.1.1 Limestone

Limestone material shall contain a minimum calcium carbonate equivalent of 80 percent. Gradation: A minimum 95 percent shall pass through a No. 8 sieve and a minimum 55 percent shall pass through a No. 60 sieve. To

raise soil pH, ground limestone shall be used.

2.3.1.2 Hydrated Lime

Hydrated lime shall contain a minimum calcium carbonate equivalent of 110 percent. Gradation: A minimum 100 percent shall pass through a No. 8 sieve and a minimum 97 percent shall pass through a No. 60 sieve.

2.3.1.3 Burnt Lime

Burnt lime shall contain a minimum calcium carbonate equivalent of 140 percent. Gradation: A minimum 95 percent shall pass through a No. 8 sieve and a minimum 35 percent shall pass through a No. 60 sieve.

2.3.2 Fertilizer

It shall be as recommended by the soil test. Fertilizer shall be controlled release commercial grade, free flowing, uniform in composition, and consist of a nitrogen-phosphorus-potassium ratio. The fertilizer shall be derived from sulphur coated urea, urea formaldehyde, plastic or polymer coated pills, or isobutylenediurea (IBDU). Fertilizer shall be balanced with the inclusion of trace minerals and micro-nutrients.

2.3.3 Nitrogen Carrier Fertilizer

It shall be as recommended by the soil test. Nitrogen carrier fertilizer shall be commercial grade, free flowing, and uniform in composition. The fertilizer may be a liquid nitrogen solution.

2.3.4 Organic Material

Organic material shall consist of either bonemeal, rotted manure, decomposed wood derivatives, recycled compost, or worm castings.

2.3.4.1 Bonemeal

Bonemeal shall be finely ground, steamed bone product containing from 2 to 4 percent nitrogen and 16 to 40 percent phosphoric acid.

2.3.4.2 Rotted Manure

Rotted manure shall be unleached horse, chicken or cattle manure containing a maximum 25 percent by volume of straw, sawdust, or other bedding materials. It shall contain no chemicals or ingredients harmful to plants. The manure shall be heat treated to kill weed seeds and be free of stones, sticks, and soil.

2.3.4.3 Decomposed Wood Derivatives

Decomposed wood derivatives shall be ground bark, sawdust, yard trimmings, or other wood waste material that is free of stones, sticks, soil, and toxic substances harmful to plants, and is fully composted or stabilized with nitrogen.

2.3.4.4 Recycled Compost

Compost shall be a well decomposed, stable, weed free organic matter source. Compost shall be derived from food; agricultural or industrial residuals; biosolids (treated sewage sludge); yard trimmings; or source-separated or mixed solid waste. The compost shall possess no objectionable odors and shall not resemble the raw material from which it was derived. The material shall not contain substances toxic to plants. Gradation: The compost material shall pass through a 3/8 inch screen, possess a pH of 5.5 to 8.0, and have a moisture content between 35-55 percent by weight. The material shall not contain more than 1 percent by weight of man-made foreign matter. Compost shall be cleaned of plastic materials larger than 2 inches in length.

2.3.4.5 Worm Castings

Worm castings shall be screened from worms and food source, and shall be commercially packaged.

2.3.5 Soil Conditioner

Soil conditioner shall be sand, super absorbent polymers, calcined clay, or gypsum for use singly or in combination to meet the requirements of the soil test.

2.3.5.1 Sand

Sand shall be clean and free of toxic materials. Gradation: A minimum 95 percent by weight shall pass a No. 10 sieve and a minimum 10 percent by weight shall pass a No. 16 sieve. Greensand shall be balanced with the inclusion of trace minerals and nutrients.

2.3.5.2 Super Absorbent Polymers

To improve water retention in soils, super absorbent polymers shall be sized and applied according to the manufacturer's recommendations. Polymers shall be added as a soil amendment and be cross-linked polyacrylamide, with an absorption capacity of 250-400 times its weight.

2.3.5.3 Calcined Clay

Calcined clay shall be granular particles produced from montmorillonite clay calcined to a minimum temperature of 1200 degrees F. Gradation: A minimum 90 percent shall pass a No. 8 sieve; a minimum 99 percent shall be retained on a No. 60 sieve; and a maximum 2 percent shall pass a No. 100 sieve. Bulk density: A maximum 40 pounds per cubic foot.

2.3.5.4 Gypsum

Gypsum shall be commercially packaged, free flowing, and a minimum 95 percent calcium sulfate by volume.

2.3.5.5 Expanded Shale, Clay, or Slate (ESCS)

Rotary kiln produced ESCS material shall be in conformance with ASTM D 5883.

2.4 MULCH

Mulch shall be free from weeds, mold, and other deleterious materials. Mulch materials shall be native to the region.

2.4.1 Straw

Straw shall be stalks from oats, wheat, rye, barley, or rice, furnished in air-dry condition and with a consistency for placing with commercial mulch-blowing equipment.

2.4.2 Hay

Hay shall be native hay, sudan-grass hay, broomsedge hay, or other herbaceous mowings, furnished in an air-dry condition suitable for placing with commercial mulch-blowing equipment.

2.4.3 Wood Cellulose Fiber

Wood cellulose fiber shall not contain any growth or germination-inhibiting factors and shall be dyed an appropriate color to facilitate placement during application. Composition on air-dry weight basis: 9 to 15 percent moisture, pH range from 4.5 to 6.0.

2.4.4 Paper Fiber

Paper fiber mulch shall be recycled news print that is shredded for the purpose of mulching seed.

2.5 OMITTED

2.6 WATER

Water shall be the responsibility of the Contractor, unless otherwise noted. Water shall not contain elements toxic to plant life.

2.7 PESTICIDE

Pesticide shall be insecticide, herbicide, fungicide, nematocide, rodenticide or miticide. For the purpose of this specification, a soil fumigant shall have the same requirements as a pesticide. The pesticide material shall be EPA registered and approved.

2.8 SURFACE EROSION CONTROL MATERIAL

Surface erosion control material shall conform to the following:

2.8.1 Surface Erosion Control Blanket

Blanket shall be machine produced mat of wood excelsior formed from a web of interlocking wood fibers; covered on one side with either knitted straw blanket-like mat construction; covered with biodegradable plastic mesh; or

interwoven biodegradable thread, plastic netting, or twisted kraft paper cord netting.

2.8.2 Surface Erosion Control Fabric

Fabric shall be knitted construction of polypropylene yarn with uniform mesh openings 3/4 to 1 inch square with strips of biodegradable paper. Filler paper strips shall have a minimum life of 6 months.

2.8.3 Surface Erosion Control Net

Net shall be heavy, twisted jute mesh, weighing approximately 1.22 pounds per linear yard and 4 feet wide with mesh openings of approximately 1 inch square.

2.8.4 Surface Erosion Control Chemicals

Chemicals shall be high-polymer synthetic resin or cold-water emulsion of selected petroleum resins.

2.8.5 Hydrophilic Colloids

Hydrophilic colloids shall be physiologically harmless to plant and animal life without phytotoxic agents. Colloids shall be naturally occurring, silicate powder based, and shall form a water insoluble membrane after curing. Colloids shall resist mold growth.

2.8.6 Erosion Control Material Anchors

Erosion control anchors shall be as recommended by the manufacturer.

PART 3 EXECUTION

3.1 INSTALLING SEED TIME AND CONDITIONS

3.1.1 Seeding Time

Seed shall be installed from spring to fall

3.1.2 Seeding Conditions

Seeding operations shall be performed only during periods when beneficial results can be obtained. When drought, excessive moisture, or other unsatisfactory conditions prevail, the work shall be stopped when directed. When special conditions warrant a variance to the seeding operations, proposed alternate times shall be submitted for approval.

3.1.3 Equipment Calibration

Immediately prior to the commencement of seeding operations, calibration tests shall be conducted on the equipment to be used. These tests shall confirm that the equipment is operating within the manufacturer's specifications and will meet the specified criteria. The equipment shall be calibrated a minimum of once every day during the operation. The

calibration test results shall be provided within 1 week of testing.

3.1.4 Soil Test

Delivered topsoil, existing soil in smooth graded areas, and stockpiled topsoil shall be tested in accordance with ASTM D 5268 and ASTM D 4972 for determining the particle size, pH, organic matter content, textural class, chemical analysis, soluble salts analysis, and mechanical analysis. Sample collection on site shall be random over the entire site. Sample collection for stockpiled topsoil shall be at different levels in the stockpile. The soil shall be free from debris, noxious weeds, toxic substances, or other materials harmful to plant growth. The test shall determine the quantities and type of soil amendments required to meet local growing conditions for the seed species specified.

3.2 SITE PREPARATION

3.2.1 Finished Grade and Topsoil

The Contractor shall verify that finished grades are as indicated on drawings, and the placing of topsoil, smooth grading, and compaction requirements have been completed in accordance with Section 02300 EARTHWORK, prior to the commencement of the seeding operation.

3.2.2 Application of Soil Amendments

3.2.2.1 Applying pH Adjuster

The pH adjuster shall be applied as recommended by the soil test. The pH adjuster shall be incorporated into the soil to a maximum 4 inch depth or may be incorporated as part of the tillage operation.

3.2.2.2 Applying Fertilizer

The fertilizer shall be applied as recommended by the soil test. Fertilizer shall be incorporated into the soil to a maximum 4 inch depth or may be incorporated as part of the tillage or hydroseeding operation.

3.2.2.3 Applying Soil Conditioner

The soil conditioner shall be as recommended by the soil test. The soil conditioner shall be spread uniformly over the soil a minimum 1 inch depth and thoroughly incorporated by tillage into the soil to a maximum 4 inch depth.

3.2.2.4 Applying Super Absorbent Polymers

Polymers shall be spread uniformly over the soil as recommended by the manufacturer and thoroughly incorporated by tillage into the soil to a maximum 4 inch depth.

3.2.3 Tillage

Soil on slopes up to a maximum 3-horizontal-to-1-vertical shall be tilled

to a minimum 4 inch depth. On slopes between 3-horizontal-to-1-vertical and 1-horizontal-to-1 vertical, the soil shall be tilled to a minimum 2 inch depth by scarifying with heavy rakes, or other method. Rototillers shall be used where soil conditions and length of slope permit. On slopes 1-horizontal-to-1 vertical and steeper, no tillage is required. Drainage patterns shall be maintained as indicated on drawings. Areas compacted by construction operations shall be completely pulverized by tillage. Soil used for repair of surface erosion or grade deficiencies shall conform to topsoil requirements. The pH adjuster, fertilizer, and soil conditioner may be applied during this procedure.

3.2.4 Prepared Surface

3.2.4.1 Preparation

The prepared surface shall be a maximum 1 inch below the adjoining grade of any surfaced area. New surfaces shall be blended to existing areas. The prepared surface shall be completed with a light raking to remove debris.

3.2.4.2 Lawn Area Debris

Debris and stones over a minimum 5/8 inch in any dimension shall be removed from the surface.

3.2.4.3 Field Area Debris

Debris and stones over a minimum 3 inch in any dimension shall be removed from the surface.

3.2.4.4 Protection

Areas with the prepared surface shall be protected from compaction or damage by vehicular or pedestrian traffic and surface erosion.

3.3 INSTALLATION

Prior to installing seed, any previously prepared surface compacted or damaged shall be reworked to meet the requirements of paragraph SITE PREPARATION. Seeding operations shall not take place when the wind velocity will prevent uniform seed distribution.

3.3.1 Installing Seed

Seeding method shall be Broadcast Seeding. Seeding procedure shall ensure even coverage. Gravity feed applicators, which drop seed directly from a hopper onto the prepared soil, shall not be used because of the difficulty in achieving even coverage, unless otherwise approved. Absorbent polymer powder shall be mixed with the dry seed at the rate recommended by the manufacturer.

3.3.1.1 Broadcast Seeding

Seed shall be uniformly broadcast using broadcast seeders. Half the total

rate of seed application shall be broadcast in 1 direction, with the remainder of the seed rate broadcast at 90 degrees from the first direction. Seed shall be covered a maximum 1/4 inch depth by disk harrow, steel mat drag, cultipacker, or other approved device.

3.3.1.2 Rolling

The entire area shall be firmed with a roller not exceeding 90 pounds per foot roller width. Slopes over a maximum 3-horizontal-to-1 vertical shall not be rolled. Areas seeded with seed drills equipped with rollers shall not be rolled.

3.3.2 Omitted

3.3.3 Mulching

3.3.3.1 Hay or Straw Mulch

Hay or straw mulch shall be spread uniformly at the rate of 2 tons per acre. Mulch shall be spread by hand, blower-type mulch spreader, or other approved method. Mulching shall be started on the windward side of relatively flat areas or on the upper part of steep slopes, and continued uniformly until the area is covered. The mulch shall not be bunched or clumped. Sunlight shall not be completely excluded from penetrating to the ground surface. All areas installed with seed shall be mulched on the same day as the seeding. Mulch shall be anchored immediately following spreading.

3.3.3.2 Mechanical Anchor

Mechanical anchor shall be a V-type-wheel land packer; a scalloped-disk land packer designed to force mulch into the soil surface; or other suitable equipment.

3.3.3.3 Omitted

3.3.3.4 Non-Asphaltic Tackifier

Hydrophilic colloid shall be applied at the rate recommended by the manufacturer, using hydraulic equipment suitable for thoroughly mixing with water. A uniform mixture shall be applied over the area.

3.3.3.5 Omitted

3.3.3.6 Wood Cellulose Fiber, Paper Fiber, and Recycled Paper

Wood cellulose fiber, paper fiber, or recycled paper shall be applied as part of the hydroseeding operation. The mulch shall be mixed and applied in accordance with the manufacturer's recommendations.

3.3.4 Watering Seed

Watering shall be started immediately after completing the seeding of an area. Water shall be applied to supplement rainfall at a rate sufficient

to ensure moist soil conditions to a minimum 1 inch depth. Run-off and puddling shall be prevented. Watering trucks shall not be driven over turf areas, unless otherwise directed. Watering of other adjacent areas or plant material shall be prevented.

3.4 SURFACE EROSION CONTROL

3.4.1 Surface Erosion Control Material

Where indicated or as directed, surface erosion control material shall be installed in accordance with manufacturer's instructions. Placement of the material shall be accomplished without damage to installed material or without deviation to finished grade.

3.4.2 Omitted

3.5 QUANTITY CHECK

For materials provided in bags, the empty bags shall be retained for recording the amount used. For materials provided in bulk, the weight certificates shall be retained as a record of the amount used. The amount of material used shall be compared with the total area covered to determine the rate of application used. Differences between the quantity applied and the quantity specified shall be adjusted as directed.

3.6 APPLICATION OF PESTICIDE

When application of a pesticide becomes necessary to remove a pest or disease, a pesticide treatment plan shall be submitted and coordinated with the installation pest management program.

3.6.1 Technical Representative

The certified installation pest management coordinator shall be the technical representative, and shall be present at all meetings concerning treatment measures for pest or disease control. They may be present during treatment application.

3.6.2 Application

A state certified applicator shall apply required pesticides in accordance with EPA label restrictions and recommendations. Clothing and personal protective equipment shall be used as specified on the pesticide label. A closed system is recommended as it prevents the pesticide from coming into contact with the applicator or other persons. Water for formulating shall only come from designated locations. Filling hoses shall be fitted with a backflow preventer meeting local plumbing codes or standards. Overflow shall be prevented during the filling operation. Prior to each day of use, the equipment used for applying pesticide shall be inspected for leaks, clogging, wear, or damage. Any repairs are to be performed immediately. A pesticide plan shall be submitted.

3.7 RESTORATION AND CLEAN UP

3.7.1 Restoration

Existing turf areas, pavements, and facilities that have been damaged from the seeding operation shall be restored to original condition at Contractor's expense.

3.7.2 Clean Up

Excess and waste material shall be removed from the seeded areas and shall be disposed offsite. Adjacent paved areas shall be cleaned.

3.8 PROTECTION OF INSTALLED AREAS

Immediately upon completion of the seeding operation in an area, the area shall be protected against traffic or other use by erecting barricades and providing signage as required, or as directed.

3.9 SEED ESTABLISHMENT PERIOD

3.9.1 Commencement

The seed establishment period to obtain a healthy stand of grass plants shall begin on the first day of work under this contract and shall end 3 months after the last day of the seeding operation. Written calendar time period shall be furnished for the seed establishment period. When there is more than 1 seed establishment period, the boundaries of the seeded area covered for each period shall be described. The seed establishment period shall be coordinated with Sections 02922 SODDING, and 02930 EXTERIOR PLANTING. The seed establishment period shall be modified for inclement weather, shut down periods, or for separate completion dates of areas.

3.9.2 Satisfactory Stand of Grass Plants

Grass plants shall be evaluated for species and health when the grass plants are a minimum 1 inch high.

3.9.2.1 Lawn Area

A satisfactory stand of grass plants from the seeding operation for a lawn area shall be a minimum 20 grass plants per square foot. Bare spots shall be a maximum 9 inches square. The total bare spots shall be a maximum 2 percent of the total seeded area.

3.9.2.2 Field Area

A satisfactory stand of grass plants from the seeding operation for a field area shall be a minimum 10 grass plants per square foot. The total bare spots shall not exceed 2 percent of the total seeded area.

3.9.3 Maintenance During Establishment Period

Maintenance of the seeded areas shall include eradicating weeds, insects and diseases; protecting embankments and ditches from surface erosion; maintaining erosion control materials and mulch; protecting installed areas

from traffic; mowing; watering; and post-fertilization.

3.9.3.1 Mowing

a. Lawn Areas: Lawn areas shall be mowed to a minimum 3 inch height when the turf is a maximum 4 inches high. Clippings shall be removed when the amount cut prevents sunlight from reaching the ground surface.

b. Field Areas: Field areas shall be mowed once during the season to a minimum 3 inch height. Clippings shall be removed when the amount cut prevents sunlight from reaching the ground surface.

3.9.3.2 Post-Fertilization

The fertilizer shall be applied as recommended by the soil test. A maximum 1/2 pound per 1000 square feet of actual available nitrogen shall be provided to the grass plants. The application shall be timed prior to the advent of winter dormancy and shall be made without burning the installed grass plants.

3.9.3.3 Pesticide Treatment

Treatment for disease or pest shall be in accordance with paragraph APPLICATION OF PESTICIDE.

3.9.3.4 Repair or Reinstall

Unsatisfactory stand of grass plants and mulch shall be repaired or reinstalled, and eroded areas shall be repaired in accordance with paragraph SITE PREPARATION.

3.9.3.5 Maintenance Record

A record of each site visit shall be furnished, describing the maintenance work performed; areas repaired or reinstalled; and diagnosis for unsatisfactory stand of grass plants.

-- End of Section --

SECTION TABLE OF CONTENTS

DIVISION 02 - SITE WORK

SECTION 02922

SODDING

06/98

PART 1 GENERAL

1.1 REFERENCES
1.2 SUBMITTALS
1.3 SOURCE INSPECTION
1.4 DELIVERY, INSPECTION, STORAGE, AND HANDLING
1.4.1 Delivery
1.4.1.1 Sod
1.4.1.2 Delivered Topsoil
1.4.1.3 Soil Amendments
1.4.1.4 Pesticides
1.4.2 Inspection
1.4.3 Storage
1.4.3.1 Sod
1.4.3.2 Other Material Storage
1.4.4 Handling
1.4.5 Time Limitation

PART 2 PRODUCTS

2.1 SOD
2.1.1 Sod Classification
2.1.2 Grass Species
2.1.3 Quality
2.1.4 Thickness
2.1.5 Anchors
2.1.6 Substitutions
2.2 TOPSOIL
2.3 SOIL AMENDMENTS
2.3.1 pH Adjuster
2.3.1.1 Limestone
2.3.1.2 Hydrated Lime
2.3.1.3 Burnt Lime
2.3.2 Fertilizer
2.3.3 Nitrogen Carrier Fertilizer
2.3.4 Organic Material
2.3.4.1 Bonemeal
2.3.4.2 Rotted Manure
2.3.4.3 Decomposed Wood Derivatives
2.3.4.4 Recycled Compost
2.3.4.5 Worm Castings
2.3.5 Soil Conditioner
2.3.5.1 Sand

2.3.5.2 Super Absorbent Polymers
2.3.5.3 Calcined Clay
2.3.5.4 Gypsum
2.3.5.5 Expanded Shale, Clay, or Slate (ESCS)
2.4 WATER
2.5 PESTICIDE

PART 3 EXECUTION

3.1 INSTALLING SOD TIME AND CONDITIONS
3.1.1 Sodding Time
3.1.2 Sodding Conditions
3.1.3 Equipment Calibration
3.1.4 Soil Test
3.2 SITE PREPARATION
3.2.1 Finished Grade and Topsoil
3.2.2 Application of Soil Amendments
3.2.2.1 Applying pH Adjuster
3.2.2.2 Applying Fertilizer
3.2.2.3 Applying Soil Conditioner
3.2.2.4 Applying Super Absorbent Polymers
3.2.3 Tillage
3.2.4 Prepared Surface
3.2.4.1 Preparation
3.2.4.2 Protection
3.3 INSTALLATION
3.3.1 Installing Sod
3.3.2 Finishing
3.3.3 Rolling
3.3.4 Watering Sod
3.4 TEMPORARY SEEDING
3.4.1 Soil Amendments, Tillage and Watering
3.4.2 Remaining Soil Amendments
3.5 QUANTITY CHECK
3.6 APPLICATION OF PESTICIDE
3.6.1 Technical Representative
3.6.2 Application
3.7 RESTORATION AND CLEAN UP
3.7.1 Restoration
3.7.2 Clean Up
3.8 PROTECTION OF INSTALLED AREAS
3.9 SOD ESTABLISHMENT PERIOD
3.9.1 Commencement
3.9.2 Satisfactory Stand of Grass Plants
3.9.3 Maintenance During Establishment Period
3.9.3.1 Mowing
3.9.3.2 Post-Fertilization
3.9.3.3 Pesticide Treatment
3.9.3.4 Repair
3.9.3.5 Maintenance Record

-- End of Section Table of Contents --

CEGS-02922 (June 1998)

SECTION 02922

SODDING
06/98

PART 1 GENERAL

1.1 REFERENCES

AMERICAN SOCIETY FOR TESTING AND MATERIALS (ASTM)

ASTM C 602	(1995a) Agricultural Liming Materials
ASTM D 4972	(1995a) pH of Soils
ASTM D 5268	(1992; R 1996) Topsoil Used for Landscaping Purposes
ASTM D 5883	(1996) Standard Guide for Use of Rotary Kiln Produced Expanded Shale, Clay or Slate (ESCS) as a Mineral Amendment in Topsoil Used for Landscaping and Related Purposes

1.2 SUBMITTALS

Government approval is required for submittals with a "G" designation; submittals not having a "G" designation are for information only. When used, a designation following the "G" designation identifies the office that will review the submittal for the Government. The following shall be submitted in accordance with Section 01330 SUBMITTAL PROCEDURES:

SD-03 Product Data

Equipment
Chemical Treatment Material

Manufacturer's literature including physical characteristics, application and installation instructions for equipment and chemical treatment material.

Equipment

A listing of equipment to be used for the sodding operation.

Delivery

Delivery schedule.

Finished Grade and Topsoil

Finished grade status.

Topsoil

Availability of topsoil from the stripping and stock piling operation.

Quantity Check

Bag count or bulk weight measurements of material used compared with area covered to determine the application rate and quantity installed. The quantity of sod used shall be compared against the total area installed.

Sod Establishment Period

Calendar time period for the sod establishment period. When there is more than one sod establishment period, the boundaries of the sodded area covered for each period shall be described.

Maintenance Record

Maintenance work performed, area repaired or reinstalled, diagnosis for unsatisfactory stand of grass plants.

Application of Pesticide

Pesticide treatment plan with sequence of treatment work with dates and times. The pesticide trade name, EPA registration number, chemical composition, formulation, concentration of original and diluted material, application rate of active ingredients, method of application, area treated, amount applied; and the name and state license number of the state certified applicator shall be included.

SD-06 Test Reports

Soil Test

Certified reports of inspections and laboratory tests, prepared by an independent testing agency, including analysis and interpretation of test results. Each report shall be properly identified. Test methods used and compliance with recognized test standards shall be described.

SD-07 Certificates

Sod
pH Adjuster
Fertilizer
Pesticide

Prior to the delivery of materials, certificates of compliance attesting that materials meet the specified requirements. Certified copies of the material certificates shall include the following:

a. Sod. Classification, botanical name, common name, mixture percentage of species, percent purity, quality grade, field location and state certification.

b. pH Adjuster. Calcium carbonate equivalent and sieve analysis.

c. Fertilizer. Chemical analysis and composition percent.

d. Pesticide. EPA registration number and registered uses.

1.3 SOURCE INSPECTION

The sources of sod material and delivered topsoil shall be subject to inspection.

1.4 DELIVERY, INSPECTION, STORAGE, AND HANDLING

1.4.1 Delivery

A delivery schedule shall be provided at least 10 calendar days prior to the first day of delivery.

1.4.1.1 Sod

Sod shall be protected during delivery to prevent desiccation, internal heat buildup, or contamination.

1.4.1.2 Delivered Topsoil

Prior to the delivery of any topsoil, its availability shall be verified in paragraph TOPSOIL. A soil test shall be provided for topsoil delivered to the site.

1.4.1.3 Soil Amendments

Soil amendments shall be delivered to the site in the original, unopened containers bearing the manufacturer's chemical analysis. In lieu of containers, soil amendments may be furnished in bulk. A chemical analysis shall be provided for bulk deliveries.

1.4.1.4 Pesticides

Pesticide material shall be delivered to the site in the original, unopened containers bearing legible labels indicating the EPA registration number and the manufacturer's registered uses.

1.4.2 Inspection

Sod shall be inspected upon arrival at the job site for conformity to species. Sod shall be checked for visible broadleaf weeds, and a visible consistency with no obvious patches of foreign grasses that exceed 2 percent of the canopy. Sod that is heating up, dry, moldy, yellow, irregularly shaped, torn, or of uneven thickness shall be rejected. Other materials shall be inspected for compliance with specified requirements. Open soil amendment containers or wet soil amendments; topsoil that contains slag, cinders, stones, lumps of soil, sticks, roots, trash or other material over a minimum 1-1/2 inch diameter; and topsoil that contains viable plants and plant parts, shall be rejected. Unacceptable materials shall be removed from the job site.

1.4.3 Storage

1.4.3.1 Sod

Sod shall be stored in designated areas and kept in a moist condition by watering with a fine mist, and covered with moist burlap, straw, or other covering. Covering shall allow air to circulate, preventing internal heat from building up. Sod shall be protected from exposure to wind and direct sunlight until installed.

1.4.3.2 Other Material Storage

Materials shall be stored in designated areas. Lime and fertilizer shall be stored in cool, dry locations, away from contaminants. Chemical treatment material shall be stored according to manufacturer's instructions and not with sod operation materials.

1.4.4 Handling

Sod shall not be damaged during handling. Except for bulk deliveries, materials shall not be dropped or dumped from vehicles.

1.4.5 Time Limitation

Time limitation between harvesting and installing sod shall be a maximum 36 hours.

PART 2 PRODUCTS

2.1 SOD

2.1.1 Sod Classification

Nursery-grown sod shall be provided as classified by applicable state laws. Sod section shall be sized to permit rolling and lifting without breaking.

2.1.2 Grass Species

Grass species shall be proportioned as follows:

Botanical Name	Common Name
EREMOCHLOA OPHIUROIDES	CENTIPEDE

2.1.3 Quality

Sod shall be relatively free of thatch, diseases, nematodes, soil-borne insects, weeds or undesirable plants, stones larger than 1 inch in diameter, woody plant roots, and other materials detrimental to a healthy stand of grass plants. Broadleaf weeds and patches of foreign grasses shall be a maximum 2 percent of the sod section.

2.1.4 Thickness

Sod shall be machine cut to a minimum 1-3/8 inch thickness. Measurement for thickness shall exclude top growth and thatch.

2.1.5 Anchors

Sod anchors shall be as recommended by the sod supplier.

2.1.6 Substitutions

Substitutions will not be allowed without written request and approval from the Contracting Officer.

2.2 TOPSOIL

Topsoil shall be as defined in ASTM D 5268. When available, the topsoil shall be the existing surface soil stripped and stockpiled onsite. When additional topsoil is required beyond the available topsoil from stripping operation, topsoil shall be delivered and amended as recommended by the soil test for the sod species specified. Topsoil shall be free from slag, cinders, stones, lumps of soil, sticks, roots, trash, or other material over a maximum 1-1/2 inch diameter. Topsoil shall be free from viable plants and plant parts.

2.3 SOIL AMENDMENTS

Soil amendments shall consist of pH adjuster, fertilizer, organic material, and soil conditioners meeting the following requirements. Vermiculite shall not be used.

2.3.1 pH Adjuster

The pH adjuster shall be an agricultural liming material in accordance with ASTM C 602. These materials may be burnt lime, hydrated lime, ground limestone, or shells. The pH adjuster shall be used to create a favorable soil pH for the plant material specified.

2.3.1.1 Limestone

Limestone material shall contain a minimum calcium carbonate equivalent of 80 percent. Gradation: A minimum 95 percent shall pass through a No. 8 sieve and a minimum 55 percent shall pass through a No. 60 sieve. To raise soil pH, ground limestone shall be used.

2.3.1.2 Hydrated Lime

Hydrated lime shall contain a minimum calcium carbonate equivalent of 110 percent. Gradation: A minimum 100 percent shall pass through a No. 8 sieve and a minimum 97 percent shall pass through a No. 60 sieve.

2.3.1.3 Burnt Lime

Burnt lime shall contain a minimum calcium carbonate equivalent of 140 percent. Gradation: A minimum 95 percent shall pass through a No. 8 sieve and a minimum 35 percent shall pass through a No. 60 sieve.

2.3.2 Fertilizer

It shall be as recommended by the soil test. Fertilizer shall be controlled release commercial grade, free flowing, uniform in composition, and consist of a nitrogen-phosphorus-potassium ratio. The fertilizer shall be derived from sulphur coated urea, urea formaldehyde, plastic or polymer coated pills, or isobutylenediurea (IBDU). Fertilizer shall be balanced with the inclusion of trace minerals and micro-nutrients.

2.3.3 Nitrogen Carrier Fertilizer

It shall be as recommended by the soil test. Nitrogen carrier fertilizer shall be commercial grade, free flowing, and uniform in composition. The fertilizer may be a liquid nitrogen solution.

2.3.4 Organic Material

Organic material shall consist of either bonemeal, rotted manure, decomposed wood derivatives, recycled compost, or worm castings.

2.3.4.1 Bonemeal

Bonemeal shall be finely ground, steamed bone product containing from 2 to 4 percent nitrogen and 16 to 40 percent phosphoric acid.

2.3.4.2 Rotted Manure

Rotted manure shall be unleached horse, chicken or cattle manure containing a maximum 25 percent by volume straw, sawdust, or other bedding materials. Manure shall contain no chemicals or ingredients harmful to plants. The manure shall be heat treated to kill weed seeds and be free of stones, sticks, and soil.

2.3.4.3 Decomposed Wood Derivatives

Decomposed wood derivatives shall be ground bark, sawdust, yard trimmings, or other wood waste material free of stones, sticks, soil, and toxic

substances harmful to plants, fully composted or stabilized with nitrogen.

2.3.4.4 Recycled Compost

Compost shall be a well decomposed, stable, weed free organic matter source. Compost shall be derived from food; agricultural or industrial residuals; biosolids (treated sewage sludge); yard trimmings; or source-separated or mixed solid waste. The compost shall possess no objectionable odors and shall not resemble the raw material from which it was derived. The material shall not contain substances toxic to plants. Gradation: The compost material shall pass through a 3/8 inch screen, possess a pH of 5.5 to 8.0, and have a moisture content between 35-55 percent by weight. The material shall not contain more than 1 percent or less by weight of man-made foreign matter. Compost shall be cleaned of plastic materials larger than 2 inches in length.

2.3.4.5 Worm Castings

Worm castings shall be screened from worms and food source, and shall be commercially packaged.

2.3.5 Soil Conditioner

Soil conditioner shall be sand, super absorbent polymers, calcined clay, or gypsum for use singly or in combination to meet the requirements for topsoil.

2.3.5.1 Sand

Sand shall be clean and free of toxic materials. Gradation: A minimum 95 percent by weight shall pass a No. 10 sieve and a minimum 10 percent by weight shall pass a No. 16 sieve. Greensand shall be balanced with the inclusion of trace minerals and nutrients.

2.3.5.2 Super Absorbent Polymers

To improve water retention in soils, super absorbent polymers shall be sized and applied according to the manufacturer's recommendations. Polymers shall be added as a soil amendment and be cross-linked polyacrylamide with an absorption capacity of 250-400 times its weight.

2.3.5.3 Calcined Clay

Calcined clay shall be granular particles produced from montmorillonite clay calcined to minimum temperature of 1200 degrees F. Gradation: A minimum 90 percent passing No. 8 sieve; a minimum 99 percent shall be retained on a No. 60 sieve; and a maximum 2 percent shall pass a No. 100 sieve. Bulk density: A maximum 40 pounds per cubic foot.

2.3.5.4 Gypsum

Gypsum shall be commercially packaged, free flowing, and a minimum 95 percent calcium sulfate by volume.

2.3.5.5 Expanded Shale, Clay, or Slate (ESCS)

Rotary kiln produced ESCS material shall be in conformance with ASTM D 5883.

2.4 WATER

Water shall be the responsibility of the Contractor unless otherwise noted. Water shall not contain elements toxic to plant life.

2.5 PESTICIDE

Pesticide shall be insecticide, herbicide, fungicide, nematocide, rodenticide or miticide. For the purpose of this specification, a soil fumigant shall have the same requirements as a pesticide. The pesticide material shall be EPA registered and approved.

PART 3 EXECUTION

3.1 INSTALLING SOD TIME AND CONDITIONS

3.1.1 Sodding Time

Sod shall be installed from spring to fall.

3.1.2 Sodding Conditions

Sodding operations shall be performed only during periods when beneficial results can be obtained. When drought, excessive moisture or other unsatisfactory conditions prevail, the work shall be stopped when directed. When special conditions warrant a variance to the sodding operations, proposed alternate times shall be submitted for approval.

3.1.3 Equipment Calibration

Immediately prior to the commencement of sodding operations, calibration tests shall be conducted on the equipment to be used. These tests shall confirm that the equipment is operating within the manufacturer's specifications and will meet the specified criteria. The equipment shall be calibrated a minimum of once every day during the operation. Provide calibration test results within one week of testing.

3.1.4 Soil Test

Delivered topsoil, existing soil in smooth graded areas, and stockpiled topsoil shall be tested in accordance with ASTM D 5268 and ASTM D 4972 for determining the particle size, pH, organic matter content, textural class, chemical analysis, soluble salts analysis, and mechanical analysis. Sample collection on site shall be random over the entire site. Sample collection for stockpiled topsoil shall be at different levels in the stockpile. The soil shall be free from debris, noxious weeds, toxic substances, or other materials harmful to plant growth. The test shall determine the quantities and type of soil amendments required to meet local growing conditions for the sod species specified.

3.2 SITE PREPARATION

3.2.1 Finished Grade and Topsoil

Prior to the commencement of the sodding operation, the Contractor shall verify that finished grades are as indicated on drawings; the placing of topsoil, smooth grading, and compaction requirements have been completed.

3.2.2 Application of Soil Amendments

3.2.2.1 Applying pH Adjuster

The pH adjuster shall be applied at the rate recommended by the soil test. The pH adjuster shall be incorporated into the soil to a maximum 4 inch depth or may be incorporated as part of the tillage operation.

3.2.2.2 Applying Fertilizer

The fertilizer shall be applied at the rate recommended by the soil test. Fertilizer shall be incorporated into the soil to a maximum 4 inch depth or may be incorporated as part of the tillage or hydroseeding operation.

3.2.2.3 Applying Soil Conditioner

The soil conditioner shall be as recommended by the soil test. The soil conditioner shall be spread uniformly over the soil a minimum 1 inch depth and thoroughly incorporated by tillage into the soil to a maximum 4 inches depth.

3.2.2.4 Applying Super Absorbent Polymers

Polymers shall be spread uniformly over the soil as recommended by the manufacturer and thoroughly incorporated by tillage into the soil to a maximum 2 inches deep prior to placement of sod.

3.2.3 Tillage

Soil on slopes up to a maximum 3-horizontal-to-1-vertical shall be tilled to a minimum 4 inches deep. On slopes between 3-horizontal-to-1-vertical and 1-horizontal-to-1 vertical, the soil shall be tilled to a minimum 2 inches deep by scarifying with heavy rakes, or other method. Rototillers shall be used where soil conditions and length of slope permit. On slopes 1-horizontal-to-1 vertical and steeper, no tillage is required. Drainage patterns shall be maintained as indicated on drawings. Areas compacted by construction operations shall be completely pulverized by tillage. Soil used for repair of surface erosion or grade deficiencies shall conform to topsoil requirements. The pH adjuster, fertilizer, and soil conditioner may be applied during this procedure.

3.2.4 Prepared Surface

3.2.4.1 Preparation

The prepared surface shall be a maximum 1 inch below the adjoining grade

of any surfaced area. New surfaces shall be blended to existing areas. The prepared surface shall be rolled and completed with a light raking to remove from the surface debris and stones over a minimum 5/8 inch in any dimension.

3.2.4.2 Protection

Areas within the prepared surface shall be protected from compaction or damage by vehicular or pedestrian traffic and surface erosion.

3.3 INSTALLATION

Prior to installing sod, any previously prepared surface compacted or damaged shall be reworked to meet the requirements of paragraph SITE PREPARATION. Areas shall be sodded as indicated. Adequate soil moisture shall be ensured prior to sodding by spraying water on the area to be sodded and wetting the soil to a maximum 1 inch depth.

3.3.1 Installing Sod

Rows of sod sections shall be placed parallel to and tightly against each other. Joints shall be staggered laterally. The sod sections shall not be stretched or overlapped. All joints shall be butted tight. Voids and air drying of roots shall be prevented. Sod sections shall be laid across the slope on long slopes. Sod sections shall be laid at right angles to the flow of water in ditches. Sod sections shall be anchored on slopes steeper than 3-horizontal-to-1-vertical. Anchoring may be required when surface weight or pressure upon placed sod sections is anticipated to cause lateral movement. Sod anchors shall be placed a minimum 2 feet on center with a minimum 2 anchors per sod section.

3.3.2 Finishing

Displacement of the sod shall be prevented by tamping or rolling the sod in place and knitting the sod to the soil. Air pockets shall be eliminated and a true and even surface shall be provided. Frayed edges shall be trimmed, and holes or missing corners shall be patched with sod.

3.3.3 Rolling

The entire area shall be firmed with a roller not exceeding 90 pounds per foot roller width. Slopes over a maximum 3-horizontal-to-1 vertical shall not be rolled.

3.3.4 Watering Sod

Watering shall be started immediately after completing each day of installing sod. Water shall be applied at least 3 times per week to supplement rainfall, at a rate sufficient to ensure moist soil conditions to a minimum depth of 1 inch. Run-off, puddling, and wilting shall be prevented. Unless otherwise directed, watering trucks shall not be driven over turf areas. Watering of other adjacent areas or plant material shall be prevented.

3.4 TEMPORARY SEEDING

When directed during contract delays affecting the sodding operation or when a quick cover is required to prevent surface erosion, the areas designated shall be seeded with annual seed in accordance with Section 02921 SEEDING. When there is no Section 02921 SEEDING provided in the project, an annual seed species and application rate shall be submitted for approval.

3.4.1 Soil Amendments, Tillage and Watering

When soil amendments have not been applied to the area, the quantity of 1/2 of the required soil amendments shall be applied and the area tilled in accordance with paragraph SITE PREPARATION. The area shall be watered in accordance with paragraph Watering Sod as required.

3.4.2 Remaining Soil Amendments

The remaining soil amendments shall be applied in accordance with the paragraph Tillage when the surface is prepared for installing sod.

3.5 QUANTITY CHECK

For materials provided in bags, the empty bags shall be retained for recording the amount used. For materials provided in bulk, the weight certificates shall be retained as a record of the amount used. The amount of the material used shall be compared with the total area covered to determine the rate of application. The quantity of sod used shall be compared against the total area established with sod. Differences between the quantity applied and the quantity specified shall be adjusted as directed.

3.6 APPLICATION OF PESTICIDE

When application of a pesticide becomes necessary to remove a pest or disease, a pesticide treatment plan shall be submitted and coordinated with the installation pest management program.

3.6.1 Technical Representative

The certified installation pest management coordinator shall be the technical representative, and shall be present at all meetings concerning treatment measures for pest or disease control. They may be present during treatment application.

3.6.2 Application

A state certified applicator shall apply required pesticides in accordance with EPA label restrictions and recommendations. Clothing and personal protective equipment shall be used as specified on the pesticide label. A closed system is recommended as it prevents the pesticide from coming into contact with the applicator or other persons. Water for formulating shall only come from designated locations. Filling hoses shall be fitted with a backflow preventer meeting local plumbing codes or standards. Overflow shall be prevented during the filling operation. Prior to each day of use,

the equipment used for applying pesticide shall be inspected for leaks, clogging, wear, or damage. Any repairs are to be performed immediately.

3.7 RESTORATION AND CLEAN UP

3.7.1 Restoration

Existing turf areas, pavements, and facilities that have been damaged from the sodding operation shall be restored to original condition at Contractor's expense.

3.7.2 Clean Up

Excess and waste material shall be removed from the sodded areas and shall be disposed offsite. Adjacent paved areas shall be cleaned.

3.8 PROTECTION OF INSTALLED AREAS

Immediately upon completion of the sodding operation in an area, the area shall be protected against traffic or other use by erecting barricades and providing signage as required, or as directed.

3.9 SOD ESTABLISHMENT PERIOD

3.9.1 Commencement

The sod establishment period to obtain a healthy stand of grass plants shall begin on the first day of work under this contract and shall end 3 months after the last day of sodding operation. Written calendar time period shall be furnished for the sod establishment period. When there is more than 1 sod establishment period, the boundaries of the sodded area covered for each period shall be described. The sod establishment period should be coordinated with Section 02930 EXTERIOR PLANTING. The sod establishment period shall be modified for inclement weather, shut down periods, or for separate completion dates of areas.

3.9.2 Satisfactory Stand of Grass Plants

Grass plants shall be evaluated for species and health. A satisfactory stand of grass plants from the sodding operation shall be living sod uniform in color and leaf texture. Bare spots shall be a maximum 2 inch square. Joints between sod pieces shall be tight and free from weeds and other undesirable growth.

3.9.3 Maintenance During Establishment Period

Maintenance of the sodded areas shall include eradicating weeds, insects and diseases; protecting embankments and ditches from surface erosion; maintaining erosion control materials and mulch; protecting installed areas from traffic; mowing; watering; and post-fertilization.

3.9.3.1 Mowing

Sodded areas shall be mowed to a minimum 3 inch height when the turf is a

maximum 4 inch height. Clippings shall be removed when the amount cut prevents sunlight from reaching the ground surface.

3.9.3.2 Post-Fertilization

The fertilizer shall be applied as recommended by the soil test. A maximum 1/2 pound per 1000 square feet of actual available nitrogen shall be provided to the grass plants. The application shall be timed prior to the advent of winter dormancy and shall be made without burning the installed grass plants.

3.9.3.3 Pesticide Treatment

Treatment for disease or pest shall be in accordance with paragraph APPLICATION OF PESTICIDE.

3.9.3.4 Repair

Unsatisfactory stand of grass plants shall be repaired or reinstalled, and eroded areas shall be repaired in accordance with paragraph SITE PREPARATION.

3.9.3.5 Maintenance Record

A record of each site visit shall be furnished which describes the maintenance work performed; areas repaired or reinstalled; and diagnosis for unsatisfactory stand of grass plants.

-- End of Section --

SECTION TABLE OF CONTENTS

DIVISION 02 - SITE WORK

SECTION 02930

EXTERIOR PLANTING

06/98

PART 1 GENERAL

1.1 REFERENCES
1.2 SUBMITTALS
1.3 SOURCE INSPECTIONS
1.4 DELIVERY, INSPECTION, STORAGE, AND HANDLING
1.4.1 Delivery
1.4.1.1 Plant Material Identification
1.4.1.2 Protection During Delivery
1.4.1.3 Delivered Topsoil
1.4.1.4 Soil Amendments
1.4.1.5 Pesticide Material
1.4.2 Inspection
1.4.3 Storage
1.4.3.1 Plant Material Storage
1.4.3.2 Other Material Storage
1.4.4 Handling
1.4.5 Time Limitation
1.5 WARRANTY

PART 2 PRODUCTS

2.1 PLANT MATERIAL
2.1.1 Plant Material Classification
2.1.2 Plant Schedule
2.1.3 Substitutions
2.1.4 Quality
2.1.5 Growing Conditions
2.1.6 Method of Shipment to Maintain Health of Root System
2.1.6.1 Balled and Burlapped (BB) Plant Material
2.1.6.2 Omitted
2.1.6.3 Omitted
2.1.6.4 Omitted
2.1.6.5 Container-Grown (C) Plant Material
2.1.7 Growth of Trunk and Crown
2.1.7.1 Deciduous Trees
2.1.7.2 omitted
2.1.7.3 Deciduous Shrubs
2.1.7.4 Coniferous Evergreen Plant Material
2.1.7.5 Broadleaf Evergreen Plant Material
2.1.7.6 Ground Cover and Vine Plant Material
2.1.8 Plant Material Size
2.1.9 Plant Material Measurement

2.2 TOPSOIL
2.3 SOIL AMENDMENTS
2.3.1 pH Adjuster
2.3.1.1 Limestone
2.3.1.2 Hydrated Lime
2.3.1.3 Burnt Lime
2.3.2 Omitted
2.3.3 Organic Material
2.3.3.1 Omitted
2.3.3.2 Rotted Manure
2.3.3.3 Omitted
2.3.3.4 Recycled Compost
2.3.4 Soil Conditioner
2.3.4.1 Sand
2.4 MULCH
2.4.1 Inorganic Mulch
2.4.2 Organic Mulch
2.4.2.1 Recycled Mulch
2.5 OMITTED
2.6 OMITTED
2.7 OMITTED
2.8 OMITTED
2.9 OMITTED
2.10 OMITTED
2.11 OMITTED
2.12 OMITTEDM
2.13 WATER
2.14 PESTICIDE

PART 3 EXECUTION

3.1 INSTALLING PLANT MATERIAL TIME AND CONDITIONS
3.1.1 Omitted
3.1.2 Omitted
3.1.3 Plant Material Conditions
3.1.4 Tests
3.1.4.1 Percolation Test
3.1.4.2 Soil Test
3.2 SITE PREPARATION
3.2.1 Finished Grade, Topsoil and Underground Utilities
3.2.2 Layout
3.2.3 Protecting Existing Vegetation
3.3 EXCAVATION
3.3.1 Obstructions Below Ground
3.3.2 Turf Removal
3.3.3 Plant Pits
3.4 INSTALLATION
3.4.1 Setting Plant Material
3.4.1.1 Omitted
3.4.2 Omitted
3.4.3 Backfill Soil Mixture
3.4.4 Omitted
3.4.5 Backfill Procedure
3.4.5.1 Balled and Burlapped, and Balled and Platformed Plant

Material
3.4.5.2 Omitted
3.4.5.3 Container-Grown and Balled and Potted Plant Material
3.4.5.4 Earth Berm
3.4.6 Plant Bed
3.4.7 Watering
3.5 FINISHING
3.5.1 Plant Material
3.5.2 Omitted
3.5.3 Placing Mulch
3.5.4 Pruning
3.6 MAINTENANCE DURING PLANTING OPERATION
3.7 APPLICATION OF PESTICIDE
3.7.1 Omitted
3.7.2 Application
3.8 RESTORATION AND CLEAN UP
3.8.1 Restoration
3.8.2 Clean Up
3.9 PLANT ESTABLISHMENT PERIOD
3.9.1 Commencement
3.9.2 Maintenance During Establishment Period
3.9.2.1 Watering Plant Material
3.9.2.2 Weeding
3.9.2.3 Pesticide Treatment
3.9.2.4 Omitted
3.9.2.5 Plant Pit Settling
3.9.2.6 Maintenance Record
3.9.3 Unhealthy Plant Material
3.9.4 Replacement Plant Material
3.9.5 Maintenance Instructions

-- End of Section Table of Contents --

CEGS-02930 (June 1998)

Includes changes through Notice 2 (November 2000)

SECTION 02930

EXTERIOR PLANTING
06/98

PART 1 GENERAL

1.1 REFERENCES

The publications listed below form a part of this specification to the extent referenced. The publications are referred to in the text by basic designation only.

AMERICAN NURSERY AND LANDSCAPE ASSOCIATION (ANLA)

ANLA Z60.1	(1996) Nursery Stock

AMERICAN NATIONAL STANDARDS INSTITUTE (ANSI)

ANSI A300	(1995) Tree Care Operations - Trees, Shrubs and other Woody Plant Maintenance

AMERICAN SOCIETY FOR TESTING AND MATERIALS (ASTM)

ASTM C 602	(1995a) Agricultural Liming Materials
ASTM D 4972	(1995a) pH of Soils
ASTM D 5268	(1992; R 1996) Topsoil Used for Landscaping Purposes

1.2 SUBMITTALS

Government approval is required for submittals with a "G" designation; submittals not having a "G" designation are for information only. When used, a designation following the "G" designation identifies the office that will review the submittal for the Government. The following shall be submitted in accordance with Section 01330 SUBMITTAL PROCEDURES:

SD-02 Shop Drawings

Shop Drawings

Scale drawings defining areas to receive plant materials.

SD-06 Test Reports

Soil Test
Percolation Test

Certified reports of inspections and laboratory tests, prepared by an independent testing agency, including analysis and interpretation of test results. Each report shall be properly identified. Test methods used and compliance with recognized test standards shall be described.

SD-07 Certificates

Plant Material; G, RE
Topsoil
pH Adjuster
Organic Material
Soil Conditioner
Organic Mulch
Pesticide

Prior to delivery of materials, certificates of compliance attesting that materials meet the specified requirements. Certified copies of the material certificates shall include the following.

a. Plant Material: Classification, botanical name, common name, size, quantity by species, and location where grown.

b. Topsoil: Particle size, pH, organic matter content, textural class, soluble salts, chemical and mechanical analyses.

c. pH Adjuster: Sieve analysis and calcium carbonate equivalent.

d. Organic Material: Composition and source.

e. Soil Conditioner: Composition and source.

f. Organic Mulch: Composition, source, and treatment against fungi growth.

g. Pesticide. EPA registration number and registered uses.

1.3 SOURCE INSPECTIONS

The nursery or source of plant material and the source of delivered topsoil shall be subject to inspection.

1.4 DELIVERY, INSPECTION, STORAGE, AND HANDLING

1.4.1 Delivery

A delivery schedule shall be provided at least 10 calendar days prior to the first day of delivery.

1.4.1.1 Plant Material Identification

Plant material shall be identified with attached, durable, waterproof labels and weather-resistant ink, stating the correct botanical plant name and size.

1.4.1.2 Protection During Delivery

Plant material shall be protected during delivery to prevent desiccation and damage to the branches, trunk, root system, or earth ball. Branches shall be protected by tying-in. Exposed branches shall be covered during transport.

1.4.1.3 Delivered Topsoil

Prior to the delivery of any topsoil, the availability of topsoil shall be verified in paragraph TOPSOIL. A soil test shall be provided for delivered topsoil.

1.4.1.4 Soil Amendments

Soil amendments shall be delivered to the site in the original, unopened containers bearing the manufacturer's chemical analysis. In lieu of containers, soil amendments may be furnished in bulk. A chemical analysis shall be provided for bulk deliveries.

1.4.1.5 Pesticide Material

Pesticide material shall be delivered to the site in the original, unopened containers bearing legible labels indicating the Environmental Protection Agency (EPA) registration number and the manufacturer's registered uses.

1.4.2 Inspection

Plant material shall be well shaped, vigorous and healthy with a healthy, well branched root system, free from disease, harmful insects and insect eggs, sun-scald injury, disfigurement or abrasion. Plant material shall be checked for unauthorized substitution and to establish nursery grown status. Plant material showing desiccation, abrasion, sun-scald injury, disfigurement, or unauthorized substitution shall be rejected. The plant material shall exhibit typical form of branch to height ratio; and meet the caliper and height measurements specified. Plant material that measures less than specified, or has been poled, topped off or headed back, shall be rejected. Container-grown plant material shall show new fibrous roots and the root mass shall contain its shape when removed from the container. Plant material with broken or cracked balls; or broken containers shall be rejected. Bare-root plant material that is not dormant or is showing roots were pulled from the ground shall be rejected. Other materials shall be inspected for compliance with paragraph PRODUCTS. Open soil amendment containers or wet soil amendments shall be rejected. Topsoil that contains slag, cinders, stones, lumps of soil, sticks, roots, trash or other material larger than 1-1/2 inch diameter shall be rejected. Topsoil that contains viable plant material and plant parts shall be rejected. Unacceptable material shall be removed from the job site.

1.4.3 Storage

1.4.3.1 Plant Material Storage

Plant material not installed on the day of arrival at the site shall be stored and protected in designated areas. Plant material shall not be stored longer than 30 days. Plant material shall be protected from direct exposure to wind and sun. Bare-root plant material shall be heeled-in. All plant material shall be kept in a moist condition by watering with a fine mist spray until installed.

1.4.3.2 Other Material Storage

Storage of other material shall be in designated areas. Soil amendments shall be stored in dry locations and away from contaminants. Chemical treatment material shall be stored according to manufacturer's instructions and not with planting operation material.

1.4.4 Handling

Plant material shall not be injured in handling. Cracking or breaking the earth ball of balled and burlapped plant material shall be avoided. Plant material shall not be handled by the trunk or stems. Materials shall not be dropped from vehicles.

1.4.5 Time Limitation

Except for container-grown plant material, the time limitation from digging to installing plant material shall be a maximum 90 days. The time limitation between installing the plant material and placing the mulch shall be a maximum 24 hours.

1.5 WARRANTY

Furnished plant material shall have a warranty for plant growth to be in a vigorous growing condition for a minimum 12 month period. A minimum 12 month calendar time period for the warranty of plant growth shall be provided regardless of the contract time period. When plant material is determined to be unhealthy in accordance with paragraph PLANT ESTABLISHMENT PERIOD, it shall be replaced once under this warranty.

PART 2 PRODUCTS

2.1 PLANT MATERIAL

2.1.1 Plant Material Classification

The plant material shall be nursery grown stock conforming to ANLA Z60.1 and shall be the species specified.

2.1.2 Plant Schedule

The plant schedule shall provide botanical names as included in one or more

of the publications listed under "Nomenclature" in ANLA Z60.1.

2.1.3 Substitutions

Substitutions will not be permitted without written request and approval from the Contracting Officer.

2.1.4 Quality

Well shaped, well grown, vigorous plant material having healthy and well branched root systems in accordance with ANLA Z60.1 shall be provided. Plant material shall be provided free from disease, harmful insects and insect eggs, sun-scald injury, disfigurement and abrasion. Plant material shall be free of shock or damage to branches, trunk, or root systems, which may occur from the digging and preparation for shipment, method of shipment, or shipment. Plant quality is determined by the growing conditions; method of shipment to maintain health of the root system; and growth of the trunk and crown as follows.

2.1.5 Growing Conditions

Plant material shall be native to or well-suited to the growing conditions of the project site. Plant material shall be grown under climatic conditions similar to those at the project site.

2.1.6 Method of Shipment to Maintain Health of Root System

2.1.6.1 Balled and Burlapped (BB) Plant Material

Ball size and ratio shall be in accordance with ANLA Z60.1. The ball shall be of a diameter and depth to encompass enough fibrous and feeding root system necessary for the full recovery of the plant. The plant stem or trunk shall be centered in the ball. All roots shall be clean cut at the ball surface. Roots shall not be pulled from the ground. Before shipment the root ball shall be dipped in gels containing mycorrhizal fungi inoculum. The root ball shall be completely wrapped with burlap or other suitable material and securely laced with biodegradable twine.

2.1.6.2 Omitted
2.1.6.3 Omitted
2.1.6.4 Omitted

2.1.6.5 Container-Grown (C) Plant Material

Container size shall be in accordance with ANLA Z60.1. Plant material shall be grown in a container over a duration of time for new fibrous roots to have developed and for the root mass to retain its shape and hold together when removed from the container. Container-grown plant material shall be inoculated with mycorrhizal fungi during germination in the nursery. Before shipment the root system shall be dipped in gels containing mycorrhizal fungi inoculum. The container shall be sufficiently rigid to hold ball shape and protect root mass during shipping.

2.1.7 Growth of Trunk and Crown

2.1.7.1 Deciduous Trees

A height to caliper relationship shall be provided in accordance with ANLA Z60.1. Height of branching shall bear a relationship to the size and species of tree specified and with the crown in good balance with the trunk. The trees shall not be "poled" or the leader removed.

a. Single stem: The trunk shall be reasonably straight and symmetrical with crown and have a persistent main leader.

b. Multi-stem: All countable stems, in aggregate, shall average the size specified. To be considered a stem, there shall be no division of the trunk which branches more than 6 inches from ground level.

2.1.7.2 omitted

2.1.7.3 Deciduous Shrubs

Deciduous shrubs shall have the height and number of primary stems recommended by ANLA Z60.1. Acceptable plant material shall be well shaped, with sufficient well-spaced side branches, and recognized by the trade as typical for the species grown in the region of the project.

2.1.7.4 Coniferous Evergreen Plant Material

Coniferous Evergreen plant material shall have the height-to-spread ratio recommended by ANLA Z60.1. The coniferous evergreen trees shall not be "poled" or the leader removed. Acceptable plant material shall be exceptionally heavy, well shaped and trimmed to form a symmetrical and tightly knit plant. The form of growth desired shall be as indicated.

2.1.7.5 Broadleaf Evergreen Plant Material

Broadleaf evergreen plant material shall have the height-to-spread ratio recommended by ANLA Z60.1. Acceptable plant material shall be well shaped and recognized by the trade as typical for the variety grown in the region of the project.

2.1.7.6 Ground Cover and Vine Plant Material

Ground cover and vine plant material shall have the minimum number of runners and length of runner recommended by ANLA Z60.1. Plant material shall have heavy, well developed and balanced crown with vigorous, well developed root system and shall be furnished in containers.

2.1.8 Plant Material Size

Plant material shall be furnished in sizes indicated. Plant material larger in size than specified may be provided at no additional cost to the Government.

2.1.9 Plant Material Measurement

Plant material measurements shall be in accordance with ANLA Z60.1.

2.2 TOPSOIL

Topsoil shall be as defined in ASTM D 5268. When available, the topsoil shall be the existing surface soil stripped and stockpiled onsite in accordance with Section 02300 EARTHWORK. When additional topsoil is required beyond the available topsoil from the stripping operation, topsoil shall be delivered and amended as recommended by the soil test for the plant material specified. Topsoil shall be free from slag, cinders, stones, lumps of soil, sticks, roots, trash or other material over a minimum 1-1/2 inch diameter. Topsoil shall be free from viable plants and plant parts.

2.3 SOIL AMENDMENTS

Soil amendments shall consist of pH adjuster, organic material and soil conditioners meeting the following requirements. Vermiculite is not recommended.

2.3.1 pH Adjuster

The pH adjuster shall be an agricultural liming material in accordance with ASTM C 602. These materials may be burnt lime, hydrated lime, ground limestone, or shells. The pH adjuster shall be used to create a favorable soil pH for the plant material specified.

2.3.1.1 Limestone

Limestone material shall contain a minimum calcium carbonate equivalent of 80 percent. Gradation: A minimum 95 percent shall pass through a No. 8 sieve and a minimum 55 percent shall pass through a No. 60 sieve. To raise soil pH, ground limestone shall be used.

2.3.1.2 Hydrated Lime

Hydrated lime shall contain a minimum calcium carbonate equivalent of 110 percent. Gradation: A minimum 100 percent shall pass through a No. 8 sieve and a minimum 97 percent shall pass through a No. 60 sieve.

2.3.1.3 Burnt Lime

Burnt lime shall contain a minimum calcium carbonate equivalent of 140 percent. Gradation: A minimum 95 percent shall pass through a No. 8 sieve and a minimum 35 percent shall pass through a No. 60 sieve.

2.3.2 Omitted

2.3.3 Organic Material

Organic material shall consist of either peat, rotted manure, or recycled compost.

2.3.3.1 Omitted

2.3.3.2 Rotted Manure

Rotted manure shall be unleached horse, chicken, or cattle manure containing a maximum 25 percent by volume of straw, sawdust, or other bedding materials. Manure shall contain no chemicals or ingredients harmful to plants. The manure shall be heat treated to kill weed seeds and shall be free of stones, sticks, and soil.

2.3.3.3 Omitted

2.3.3.4 Recycled Compost

Compost shall be a well decomposed, stable, weed free organic matter source. It shall be derived from food, agricultural, or industrial residuals; biosolids (treated sewage sludge); yard trimmings; or source-separated or mixed solid waste. The compost shall possess no objectionable odors and shall not resemble the raw material from which it was derived. The material shall not contain substances toxic to plants. Gradation: The compost material shall pass through a 3/8 inch screen, possess a pH of 5.5 to 8.0, and have a moisture content between 35-55 percent by weight. The material shall not contain more than 1 percent or less by weight of man-made foreign matter. Compost shall be cleaned of plastic materials larger than 2 inches in length.

2.3.4 Soil Conditioner

Soil conditioner shall be sand to meet topsoil requirements for the plant material specified.

2.3.4.1 Sand

Sand shall be clean and free of toxic materials. Gradation: A minimum 95 percent by weight shall pass a No. 10 sieve and a minimum 10 percent by weight shall pass a No. 16 sieve. Greensand shall be balanced with the inclusion of trace minerals and nutrients.

2.4 MULCH

Mulch shall be free from weeds, mold, and other deleterious materials. Mulch materials shall be native to the region. Rotted manure is not recommended to be used as a mulch because it would encourage surface rooting of the plant material and weeds.

2.4.1 Inorganic Mulch

When inorganic mulch is required for decorative purposes around shrubs and ground cover, it shall be provided in areas designated, and consist of one of the following:

a. riverbank stone ranging in size from 1 to 3/8 inches

b. crusher run rock ranging in size from 1 to 3/8 inches

c. marble chips ranging in size from 1 to 3/8 inches

2.4.2 Organic Mulch

Organic mulch materials shall be native to the project site and consist of recycled mulch.

2.4.2.1 Recycled Mulch

Recycled mulch for trees shall be pine needles with a gradation that passes through a 2-1/2 x 2-1/2 inch screen. It shall be cleaned of all sticks a minimum 1 inch in diameter and plastic materials a minimum 3 inch length. The material shall be treated to retard the growth of mold and fungi.

2.5 OMITTED
2.6 OMITTED
2.7 OMITTED
2.8 OMITTED
2.9 OMITTED
2.10 OMITTED
2.11 OMITTED
2.12 OMITTEDM

2.13 WATER

Unless otherwise directed, water shall be the responsibility of the Contractor. Water shall not contain elements toxic to plant life.

2.14 PESTICIDE

Pesticide shall be insecticide, herbicide, fungicide, nematocide, rodenticide or miticide. For the purpose of this specification a soil fumigant shall have the same requirements as a pesticide. The pesticide material shall be EPA registered and approved.

PART 3 EXECUTION

3.1 INSTALLING PLANT MATERIAL TIME AND CONDITIONS

3.1.1 Omitted
3.1.2 Omitted

3.1.3 Plant Material Conditions

Planting operations shall be performed only during periods when beneficial results can be obtained. When drought, excessive moisture, frozen ground or other unsatisfactory conditions prevail, the work shall be stopped when directed. When special conditions warrant a variance to the planting operations, proposed planting times shall be submitted for approval.

3.1.4 Tests

3.1.4.1 Percolation Test

Test for percolation shall be done to determine positive drainage of plant pits and beds. A positive percolation shall consist of a minimum 1 inch per 3 hours; when a negative percolation test occurs, a shop drawing shall be submitted indicating the corrective measures.

3.1.4.2 Soil Test

Delivered topsoil, excavated plant pit soil, and stockpiled topsoil shall be tested in accordance with ASTM D 5268 and ASTM D 4972 for determining the particle size, pH, organic matter content, textural class, chemical analysis, soluble salts analysis, and mechanical analysis. Sample collection onsite shall be random over the entire site. Sample collection for stockpiled topsoil shall be at different levels in the stockpile. The soil shall be free from debris, noxious weeds, toxic substances, or other materials harmful to plant growth. The test shall determine the quantities and type of soil amendments required to meet local growing conditions for the plant material specified.

3.2 SITE PREPARATION

3.2.1 Finished Grade, Topsoil and Underground Utilities

The Contractor shall verify that finished grades are as indicated on drawings, and that the placing of topsoil, the smooth grading, and the compaction requirements have been completed in accordance with Section 02300 EARTHWORK, prior to the commencement of the planting operation. The location of underground utilities and facilities in the area of the planting operation shall be verified. Damage to underground utilities and facilities shall be repaired at the Contractor's expense.

3.2.2 Layout

Plant material locations and bed outlines shall be staked on the project site before any excavation is made. Plant material locations may be adjusted to meet field conditions.

3.2.3 Protecting Existing Vegetation

When there are established lawns in the planting area, the turf shall be covered and/or protected during planting operations. Existing trees, shrubs, and plant beds that are to be preserved shall be barricaded along the dripline to protect them during planting operations.

3.3 EXCAVATION

3.3.1 Obstructions Below Ground

When obstructions below ground affect the work, shop drawings showing proposed adjustments to plant material location, type of plant and planting method shall be submitted for approval.

3.3.2 Turf Removal

Where the planting operation occurs in an existing lawn area, the turf shall be removed from the excavation area to a depth that will ensure the removal of the entire root system.

3.3.3 Plant Pits

Plant pits for ball and burlapped or container plant material shall be dug to a depth equal to the height of the root ball as measured from the base of the ball to the base of the plant trunk. Plant pits for bare-root plant material shall be dug to a depth equal to the height of the root system. Plant pits shall be dug a minimum 50 percent wider than the ball or root system to allow for root expansion. The pit shall be constructed with sides sloping towards the base as a cone, to encourage well aerated soil to be available to the root system for favorable root growth. Cylindrical pits with vertical sides shall not be used.

3.4 INSTALLATION

3.4.1 Setting Plant Material

Plant material shall be set plumb and held in position until sufficient soil has been firmly placed around root system or ball. In relation to the surrounding grade, the plant material shall be set even with the grade at which it was grown.

3.4.1.1 Omitted
3.4.2 Omitted

3.4.3 Backfill Soil Mixture

The backfill soil mixture may be a mix of topsoil and soil amendments suitable for the plant material specified. When practical, the excavated soil from the plant pit that is not amended provides the best backfill and shall be used.

3.4.4 Omitted

3.4.5 Backfill Procedure

Prior to backfilling, all metal, wood, synthetic products, or treated burlap devices shall be removed from the ball or root system avoiding damage to the root system. The backfill procedure shall remove air pockets from around the root system. Additional requirements are as follows.

3.4.5.1 Balled and Burlapped, and Balled and Platformed Plant Material

Biodegradable burlap and tying material shall be carefully opened and folded back from the top a minimum 1/3 depth from the top of the root ball. Backfill mixture shall be added to the plant pit in 6 inch layers with each layer tamped.

3.4.5.2 Omitted

3.4.5.3 Container-Grown and Balled and Potted Plant Material

The plant material shall be carefully removed from containers that are not biodegradeable. Prior to setting the plant in the pit, a maximum 1/4 depth of the root mass, measured from the bottom, shall be spread apart to promote new root growth. For plant material in biodegradable containers the container shall be split prior to setting the plant with container. Backfill mixture shall be added to the plant pit in 6 inch layers with each layer tamped.

3.4.5.4 Earth Berm

An earth berm, consisting of backfill soil mixture, shall be formed with a minimum 4 inch height around the edge of the plant pit to aid in water retention and to provide soil for settling adjustments.

3.4.6 Plant Bed

Plant material shall be set in plant beds according to the drawings. Backfill soil mixture shall be placed on previously scarified subsoil to completely surround the root balls, and shall be brought to a smooth and even surface, blending to existing areas.

3.4.7 Watering

Plant pits and plant beds shall be watered immediately after backfilling, until completely saturated.

3.5 FINISHING

3.5.1 Plant Material

Prior to placing mulch, the installed area shall be uniformly edged to provide a clear division line between the planted area and the adjacent turf area, shaped as indicated. The installed area shall be raked and smoothed while maintaining the earth berms.

3.5.2 Omitted

3.5.3 Placing Mulch

The placement of mulch shall occur a maximum 48 hours after planting. Mulch, used to reduce soil water loss, regulate soil temperature and prevent weed growth, shall be spread to cover the installed area with a minimum 4 inch uniform thickness. Mulch shall be kept out of the crowns of shrubs, ground cover, and vines and shall be kept off buildings, sidewalks and other facilities.

3.5.4 Pruning

Pruning shall be accomplished by trained and experienced personnel. The pruning of trees and palms shall be in accordance with ANSI A300. Only dead or broken material shall be pruned from installed plants. The typical growth habit of individual plant material shall be retained. Clean cuts

shall be made flush with the parent trunk. Improper cuts, stubs, dead and broken branches shall be removed. "Headback" cuts at right angles to the line of growth will not be permitted. Trees shall not be poled or the leader removed, nor shall the leader be pruned or "topped off".

3.6 MAINTENANCE DURING PLANTING OPERATION

Installed plant material shall be maintained in a healthy growing condition. Maintenance operations shall begin immediately after each plant is installed to prevent desiccation and shall continue until the plant establishment period commences. Installed areas shall be kept free of weeds, grass, and other undesired vegetation. The maintenance includes maintaining the mulch, watering, and adjusting settling.

3.7 APPLICATION OF PESTICIDE

When application of a pesticide becomes necessary to remove a pest or disease, a pesticide treatment plan shall be submitted and coordinated with the installation pest management program.

3.7.1 Omitted

3.7.2 Application

A state certified applicator shall apply required pesticides in accordance with EPA label restrictions and recommendations. Clothing and personal protective equipment shall be used as specified on the pesticide label. A closed system is recommended as it prevents the pesticide from coming into contact with the applicator or other persons. Water for formulating shall only come from designated locations. Filling hoses shall be fitted with a backflow preventer meeting local plumbing codes or standards. Overflow shall be prevented during the filling operation. Prior to each day of use, the equipment used for applying pesticide shall be inspected for leaks, clogging, wear, or damage. Any repairs are to be performed immediately.

3.8 RESTORATION AND CLEAN UP

3.8.1 Restoration

Turf areas, pavements and facilities that have been damaged from the planting operation shall be restored to original condition at the Contractor's expense.

3.8.2 Clean Up

Excess and waste material shall be removed from the installed area and shall be disposed offsite. Adjacent paved areas shall be cleared.

3.9 PLANT ESTABLISHMENT PERIOD

3.9.1 Commencement

Upon completion of the last day of the planting operation, the plant establishment period for maintaining installed plant material in a healthy

growing condition shall commence and shall be in effect for a minimum of 90 days or the remaining contract time period, whichever is longer, not to exceed 12 months. Written calendar time period shall be furnished for the plant establishment period. When there is more than one plant establishment period, the boundaries of the planted area covered for each period shall be described. The plant establishment period shall be coordinated with Sections 02921 SEEDING; and 02922 SODDING. The plant establishment period shall be modified for inclement weather shut down periods, or for separate completion dates for areas.

3.9.2 Maintenance During Establishment Period

Maintenance of plant material shall include straightening plant material, ; correcting girdling; supplementing mulch; pruning dead or broken branch tips; maintaining plant material labels; watering; eradicating weeds, insects and disease; post-fertilization; and removing and replacing unhealthy plants.

3.9.2.1 Watering Plant Material

The plant material shall be watered as necessary to prevent desiccation and to maintain an adequate supply of moisture within the root zone. An adequate supply of moisture is estimated to be the equivalent of 1 inch absorbed water per week, delivered in the form of rain or augmented by watering. Run-off, puddling and wilting shall be prevented. Unless otherwise directed, watering trucks shall not be driven over turf areas. Watering of other adjacent areas or existing plant material shall be prevented.

3.9.2.2 Weeding

Grass and weeds in the installed areas shall not be allowed to reach a maximum 3 inches height before being completely removed, including the root system.

3.9.2.3 Pesticide Treatment

Treatment for disease or pest shall be in accordance with paragraph APPLICATION OF PESTICIDE.

3.9.2.4 Omitted

3.9.2.5 Plant Pit Settling

When settling occurs to the backfill soil mixture, additional backfill soil shall be added to the plant pit or plant bed until the backfill level is equal to the surrounding grade. Serious settling that affects the setting of the plant in relation to the maximum depth at which it was grown requires replanting in accordance with paragraph INSTALLATION. The earth berm shall be maintained.

3.9.2.6 Maintenance Record

A record shall be furnished describing the maintenance work performed, the

quantity of plant losses, diagnosis of the plant loss, and the quantity of replacements made on each site visit.

3.9.3 Unhealthy Plant Material

A tree shall be considered unhealthy or dead when the main leader has died back, or up to a maximum 25 percent of the crown has died. A shrub shall be considered unhealthy or dead when up to a maximum 25 percent of the plant has died. This condition shall be determined by scraping on a branch an area 1/16 inch square, maximum, to determine if there is a green cambium layer below the bark. The Contractor shall determine the cause for unhealthy plant material and shall provide recommendations for replacement. Unhealthy or dead plant material shall be removed immediately and shall be replaced as soon as seasonal conditions permit.

3.9.4 Replacement Plant Material

Unless otherwise directed, plant material shall be provided for replacement in accordance with paragraph PLANT MATERIAL. Replacement plant material shall be installed in accordance with paragraph INSTALLATION, and recommendations in paragraph PLANT ESTABLISHMENT PERIOD. Plant material shall be replaced in accordance with paragraph WARRANTY. An extended plant establishment period shall not be required for replacement plant material.

3.9.5 Maintenance Instructions

Written instructions shall be furnished containing drawings and other necessary information for year-round care of the installed plant material; including, when and where maintenance should occur, and the procedures for plant material replacement,.

-- End of Section --