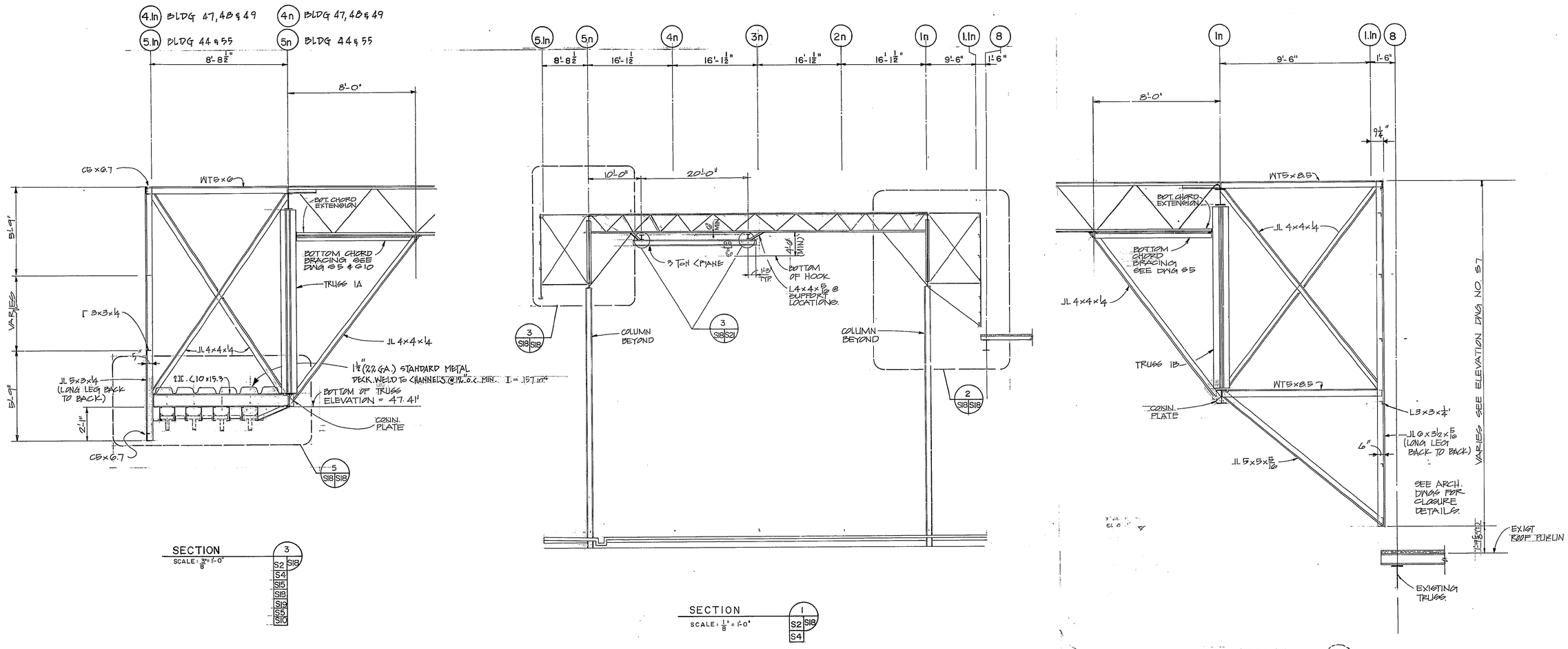

NOTES:
1. FOR GENERAL NOTES SEE DWG S-23
2. ALL BRACING CONNECTION SHALL DEVELOP FULL CAPACITY OF MEMBER.

SCALE: 3/4" = 1'-0"
SCALE: 1/8" = 1'-0"
SCALE: 3/8" = 1'-0"

SYMBOL	ZONE	DESCRIPTION	DATE	BY
		REVISIONS		

WURZ WISECARVER & PRUETT
ARCHITECTS ENGINEERS
ATLANTA GEORGIA

U. S. ARMY
ENGINEER DISTRICT, SAVANNAH
CORPS OF ENGINEERS
SAVANNAH, GEORGIA

NOSE DOCK EMPENNAGE ENCLOSURE

BUILDING SECTIONS

ROBINS AIR FORCE BASE GEORGIA

SIZE	INVITATION NO.	DRAWING NO.	PLATE
F	DACA 21-85-B-0090	39-01-08	S-18

SCALE: AS SHOWN SHEET 48

48

FORMAT 6

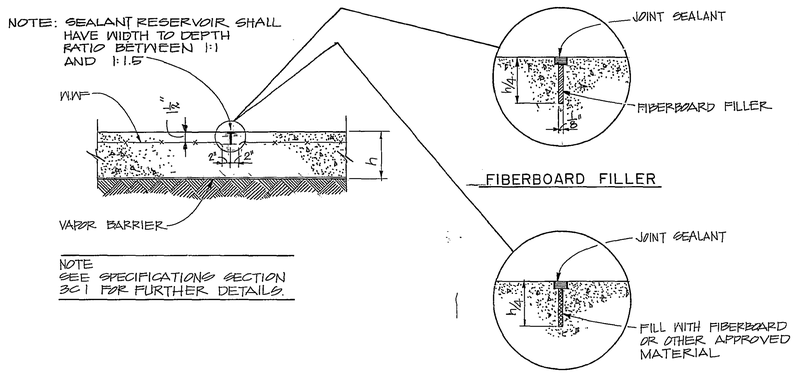

NOTE
SEE SPECIFICATIONS SECTION 3C1 FOR FURTHER DETAILS.

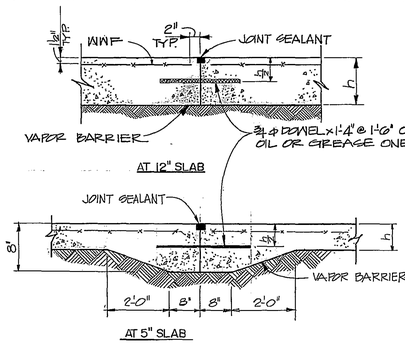

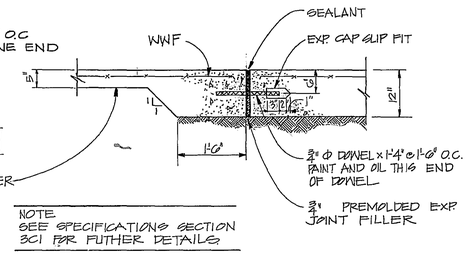

NOTE
SEE SPECIFICATIONS SECTION 3C1 FOR FUTHER DETAILS

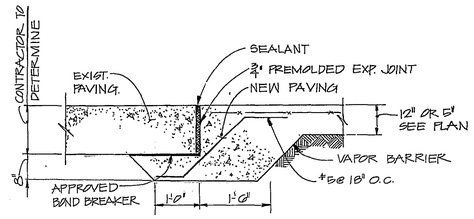

CONTRACTION JOINT DETAILS — SAWED

NO SCALE

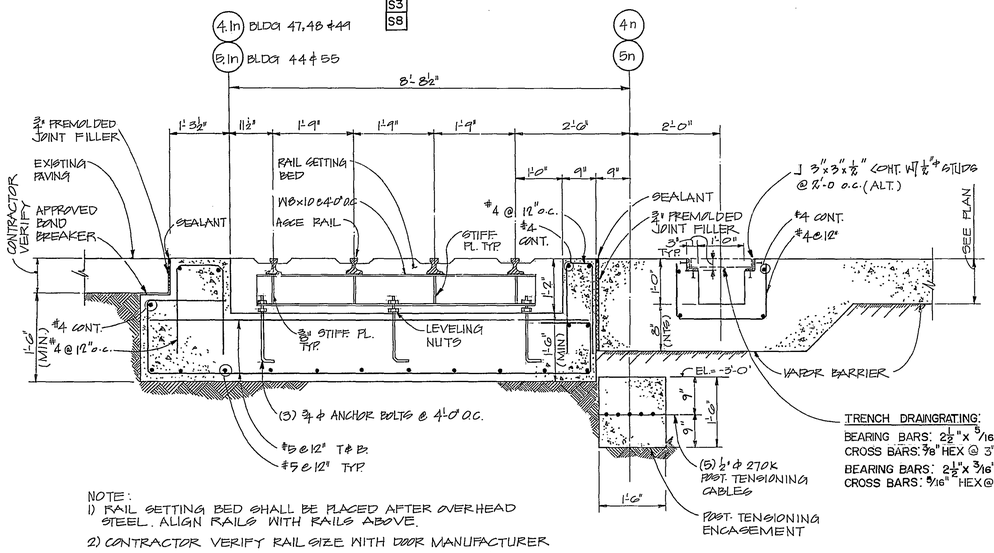

NOTE:
1) RAIL SETTING BED SHALL BE PLACED AFTER OVERHEAD STEEL. ALIGN RAILS WITH RAILS ABOVE.
2) CONTRACTOR VERIFY RAIL SIZE WITH DOOR MANUFACTURER.
3) POST-TENSIONING ENGAGEMENT MUST PLACED AND CABLES TENSIONED PRIOR TO ANY OTHER CONCRETE PLACEMENT.
4) SEE ARCH. DWGS FOR EXTENT OF RAILS.

CONSTRUCTION JOINT DETAIL

NO SCALE

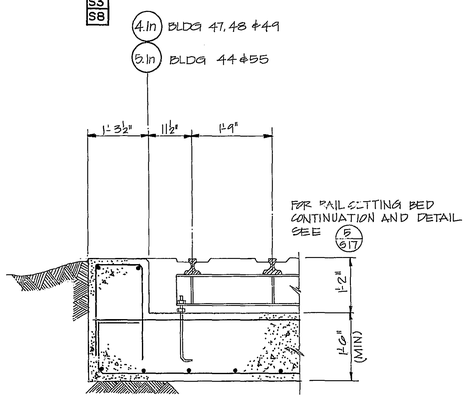

EXPANSION JOINT DETAIL

SCALE: ¾" = 1'-0"

EXP. JOINT DETAIL @ INTERFACE OF NEW AND EXISTING PAVEMENT

NO SCALE

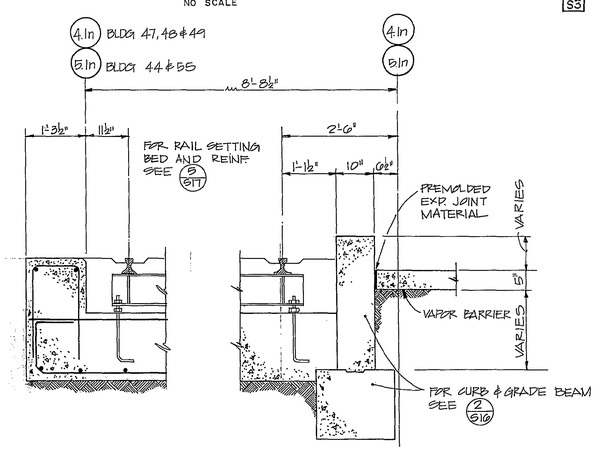

SECTION

SCALE: ¾" = 1'-0"

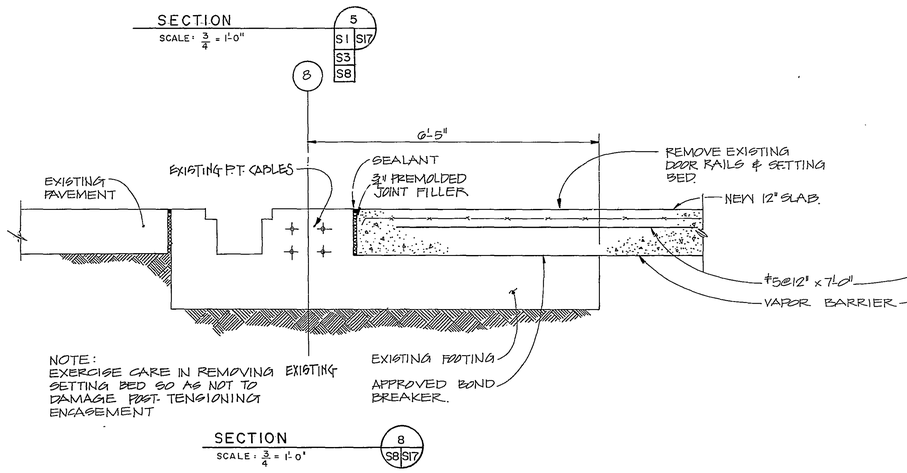

SECTION

SCALE: ¾" = 1'-0"

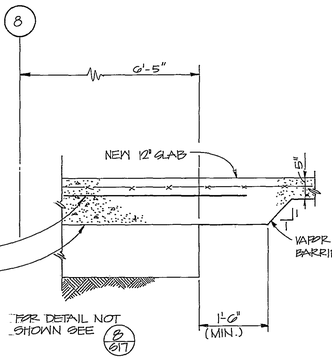

SECTION

SCALE: ¾" = 1'-0"

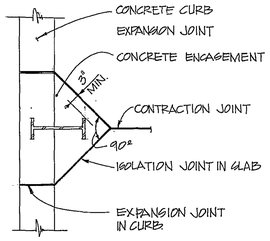

TYPICAL ISOLATION JOINT DETAIL

(N.T.S)

NOTE:
1) SEE S-23 FOR NOTES.

SECTION

SCALE: ¾" = 1'-0"

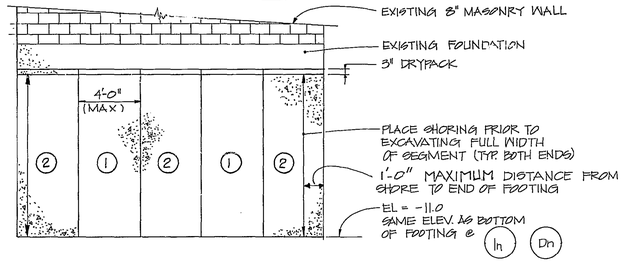

NOTE:
1) SEE S-23 FOR UNDERPINNING NOTES.

UNDERPINNING DETAIL

SCALE: ¼" = 1'-0"

12" 6" 0 1' 2' SCALE: ¾" = 1'-0"

12" 0 5" 10" SCALE: ¼" = 1'-0"

SYMBOL	ZONE	DESCRIPTION	DATE	BY
		REVISIONS		

WURZ WISECARVER & PRUETT ARCHITECTS ENGINEERS ATLANTA GEORGIA

U. S. ARMY ENGINEER DISTRICT, SAVANNAH CORPS OF ENGINEERS SAVANNAH, GEORGIA

NOSE DOCK EMPENNAGE ENCLOSURE

FOUNDATION DETAILS

ROBINS AIR FORCE BASE GEORGIA

SIZE	INVITATION NO.	DRAWING NO.	PLATE
F	DACA 21-85-B-0090	39-01-08	S-17

SCALE: AS SHOWN SHEET 47

FORMAT 6

AF 24365C

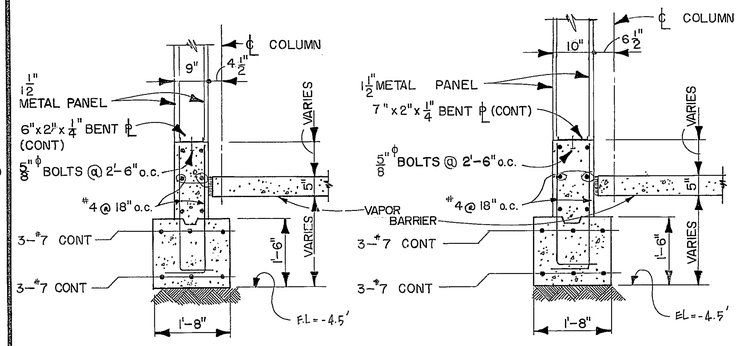

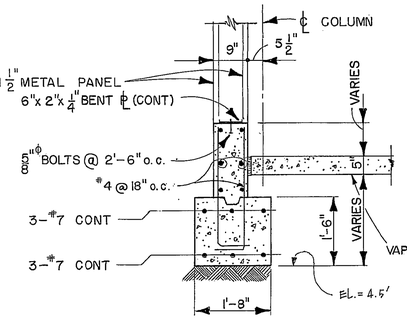

COLUMN AND FOOTING SCHEDULE

TYPE		A	B	C	D	E	F	G *	H
COLUMN SIZE		W14x43	W14x90	W14x43	W21x68	W21x68	W18x53	W14x43	W14x43
ELEVATION TOP OF BASE PL		-2.71'	-2.71'	-2.79'	-2.71'	-2.79'	-2.79'	DETERMINE IN FIELD	-2.71'
BASE PL ↔ x ↕ x THICK		18"x18"x1½"	18"x18"x1½"	18"x12"x1"	25"x12¼"x1¼"	25"x12¼"x1¼"	18"x18"x1½"	18"x12"x1"	18"x18"x1½"
ANCHOR BOLTS		(6)1⅛"ϕ A325	(6)1⅛"ϕ A325	(4)¾"ϕ A307	(6)1⅛"ϕ A325	(4)¾"ϕ A307	(4)¾"ϕ A307	40-¾"ϕ EXP BOLTS MIN. ULT. SHEAR=16K	(6)1¼"ϕ A325
PEDESTAL	TOP ELEVATION	-3.0'	-3.0'	-3.0'	-3.0'	-3.0'	-3.0'	—	-3.0'
	SIZE ↔ x ↕	5'-6"x2'-0"	2'-0"x5'-6"	1'-8"x1'-8"	5'-6"x2'-0"	1'-8"x1'-8"	1'-8"x1'-8"	—	5'-6"x2'-0" 2'-0"x5'-6"
	VERT. REINF.	#6@8"	#6@8"	4-#8	#6@8"	4-#8	4-#6	—	#6@8"
	HORZ. REINF.	#5@12"	#5@12"	#4 TIES@1'-4"	#5@12"	#4 TIES@1'-4"	#4 TIES@1'-4"	—	#5@12"
FOOTING	BOTT. ELEVATION	-11.5'	-11.5'	-11.5'	-11.5'	-6.0'	-11.5'	—	-12.5'
	SIZE ↔ x ↕ xTHK	9'-0"x9'-0"x1'-6"	9'-0"x9'-0"x1'-6"	1'-8"x4'-0"x1'-6"	9'-0"x9'-0"x1'-6"	4'-6"x4'-6"x1'-3"	4'-6"x4'-6"x1'-3"	—	9'-0"x9'-0"x1'-9"
	TOP BARS (E.W.)	8-#6	8-#6	NONE	8-#6	NONE	NONE	—	10-#6
	BOTT. BARS (E.W.)	8-#6	8-#6	4-#4	8-#6	4-#5 E.W.	4-#5	—	10-#6

NOTE:
SEE SHEET S21 FOR BASE PLATE DETAILS.
SEE (11/S16) FOR ANCHOR BOLT DETAILS

SECTION 1 / SCALE ¾"=1'-0" — (1/S16) S-1, S-3, S-8

SECTION 2 / SCALE ¾"=1'-0" — (2/S16) S-1, S-3, S-8

SECTION 3 / SCALE ¾"=1'-0" — (3/S16) S-1, S-3, S-8

* NOTE: TYPE G IS AN EXISTING FOOTING — SEE DETAIL (9/S16)

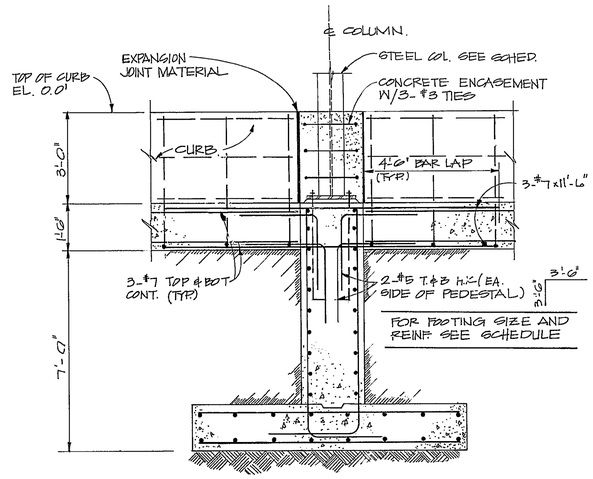

DETAIL AT FOOTING TYPE A & D — (4/S16) S-1, S-3, S-8
SCALE ½" = 1'-0"

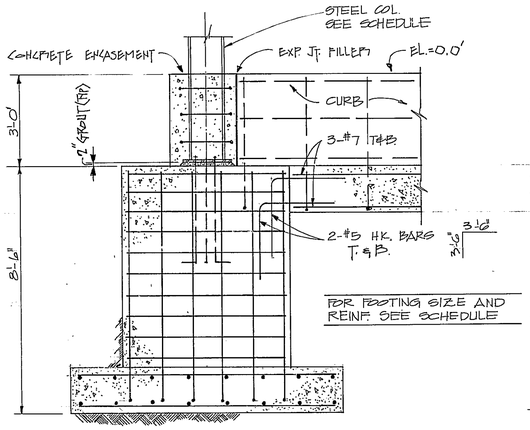

DETAIL AT FOOTING TYPE A — (5/S16) S-1, S-3, S-8
SCALE ½" = 1'-0"

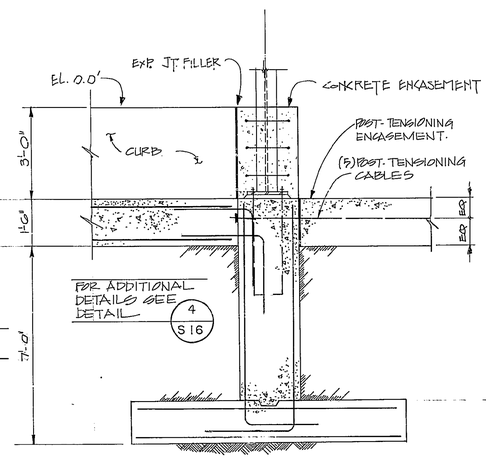

DETAIL AT FOOTING TYPE B — (6/S16) S-1, S-3, S-8
SCALE ½" = 1'-0"

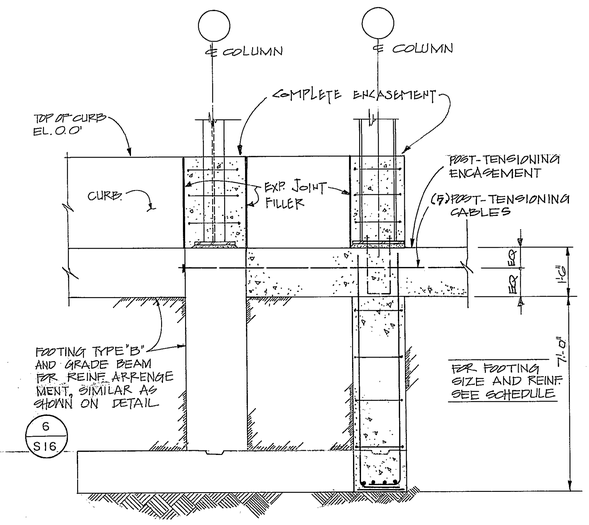

DETAIL AT FOOTING TYPE B & C — (7/S16) S-1, S-3, S-8
SCALE ½" = 1'-0"

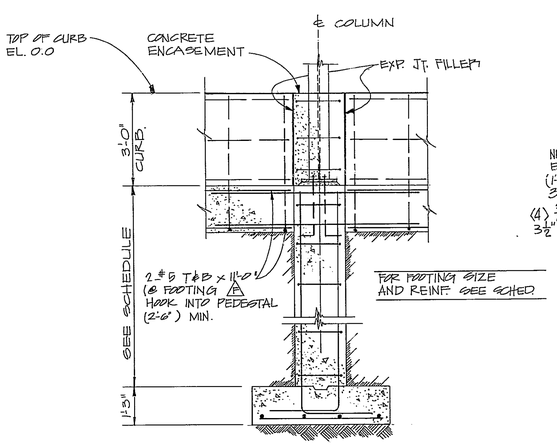

DETAIL AT FOOTING TYPE E & F — (8/S16) S-1, S-3, S-8
SCALE ½" = 1'-0"

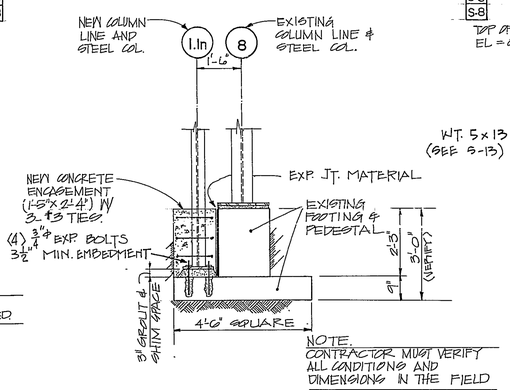

DETAIL AT FOOTING TYPE G — (9/S16) S-1, S-3, S-8
SCALE ½" = 1'-0"

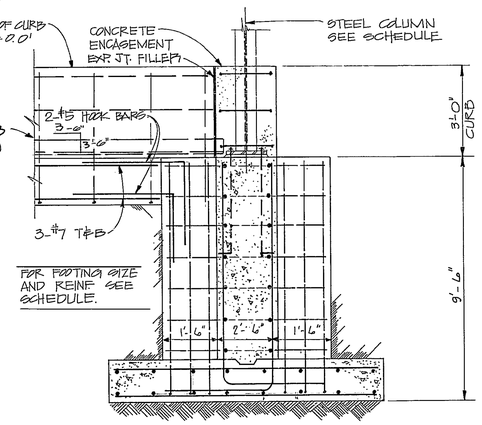

DETAIL AT FOOTING TYPE H — (10/S16) S-8
SCALE ½" = 1'-0"

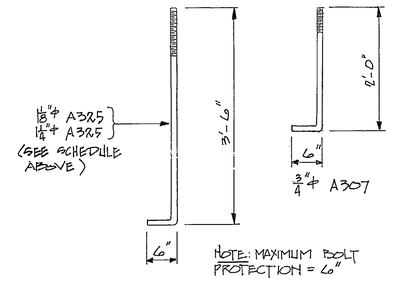

TYP. ANCHOR BOLTS — (11/S16 S16)
SCALE 1" = 1'-0"

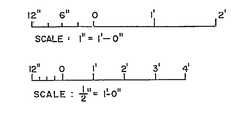

NOTE:
1) SEE S-93 FOR NOTES

SYMBOL	ZONE	DESCRIPTION	DATE	BY
		REVISIONS		

WURZ WISECARVER & PRUETT ARCHITECTS ENGINEERS ATLANTA GEORGIA

U. S. ARMY ENGINEER DISTRICT, SAVANNAH CORPS OF ENGINEERS SAVANNAH, GEORGIA

NOSE DOCK EMPENNAGE ENCLOSURE

FOUNDATION DETAILS

ROBINS AIR FORCE BASE GEORGIA

SIZE	INVITATION NO.	DRAWING NO.	PLATE
F	DACA 21-84-B-0090	39-01-08	S-16
SCALE: AS SHOWN		SHEET 46	

46

FORMAT 6

AF 24369C

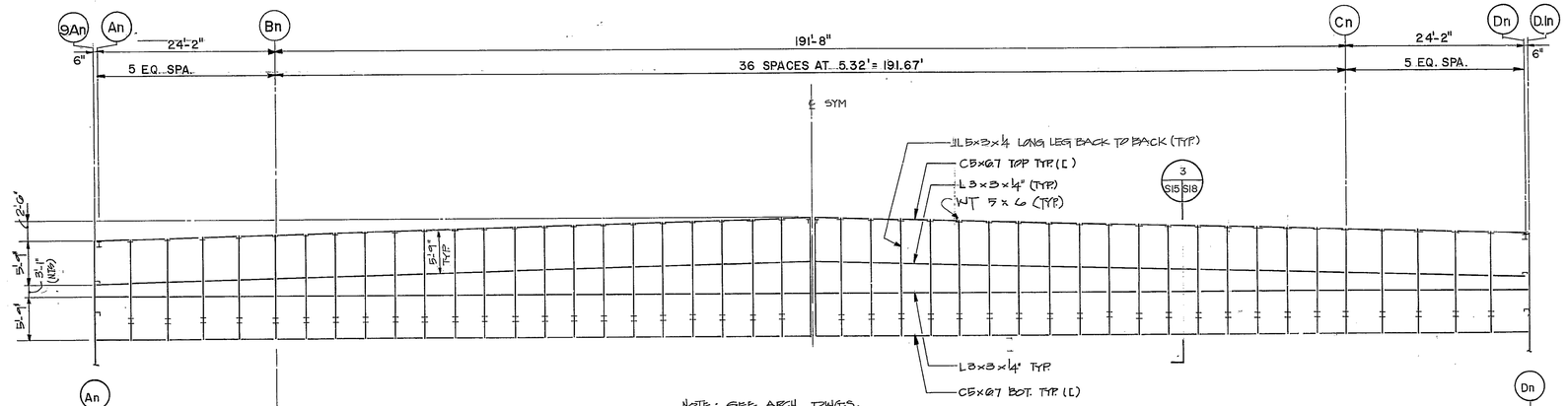

NOTE: SEE ARCH. DWGS. FOR HANGAR DOORS (DOORS TO BE DESIGNED BY MAN'F. PER TYP. DETAILS & SPECIFICATIONS)

ELEVATION
SCALE ⅛" = 1'-0"
1 — S2 S15 S4 S9

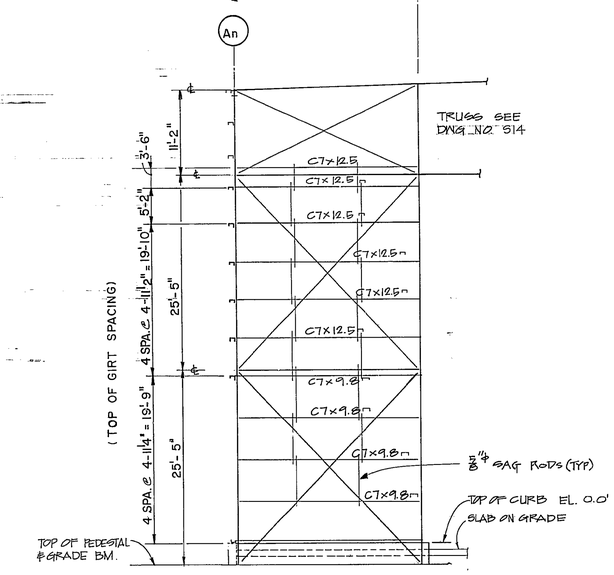

FOR FOUNDATION SEE DWG NO. S14

ELEVATION
SCALE ⅛" = 1'-0"
2 — S2 S15 S4 S9

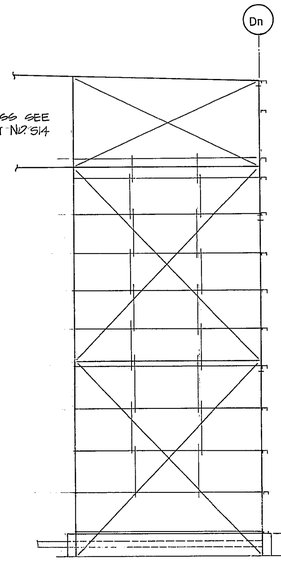

SEE S-14 FOR FOUNDATION

ELEVATION
SCALE ⅛" = 1'-0"
3 — S2 S15 S4 S9

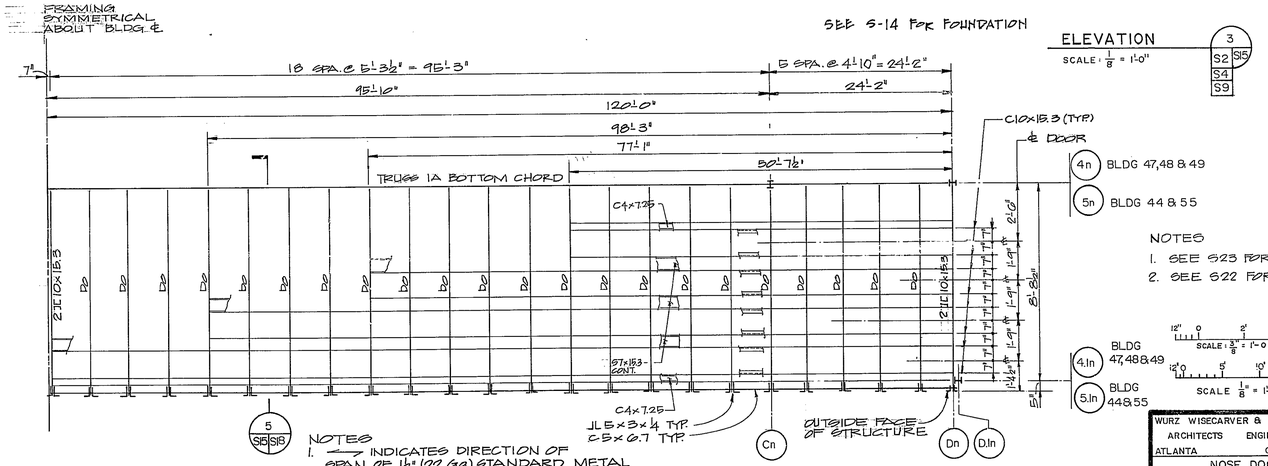

NOTES
1. SEE S23 FOR GENERAL NOTES
2. SEE S22 FOR WIND GIRT CONNECTION

SCALE ⅜" = 1'-0"
SCALE ⅛" = 1'-0"

DOOR HEAD FRAMING PLAN
SCALE: ⅛" = 1'-0" HORIZONTAL
⅜" = 1'-0" VERTICAL
4 — S2 S15 S4 S9

NOTES
1. ⟷ INDICATES DIRECTION OF SPAN OF 1½" (22 Ga) STANDARD METAL ROOF DECK (MIN. I = .157 in⁴ WELD TO C10x15.3 @ 12" O.C
2. DOOR MANUFACTURER SHALL LOCATE ACCESS OPENINGS ABOVE TOP ROLLERS AS REQ'D CONTRACTOR SHALL PROVIDE C6x8.2 TO SUPPORT METAL DECK @ OPENING LOCATIONS.

SYMBOL	ZONE	DESCRIPTION	DATE	BY
		REVISIONS		

WURZ WISECARVER & PRUETT ARCHITECTS ENGINEERS ATLANTA GEORGIA

U. S. ARMY ENGINEER DISTRICT, SAVANNAH CORPS OF ENGINEERS SAVANNAH, GEORGIA

NOSE DOCK EMPENNAGE ENCLOSURE

BUILDING 44,47,48 & 49
EXTERIOR ELEVATIONS

ROBINS AIR FORCE BASE GEORGIA

SIZE	INVITATION NO.	DRAWING NO.	PLATE
F	DACA-21-85-B-0090	39-01-08	S15

SCALE: AS SHOWN SHEET 45

45

FORMAT 6

AI 24369C

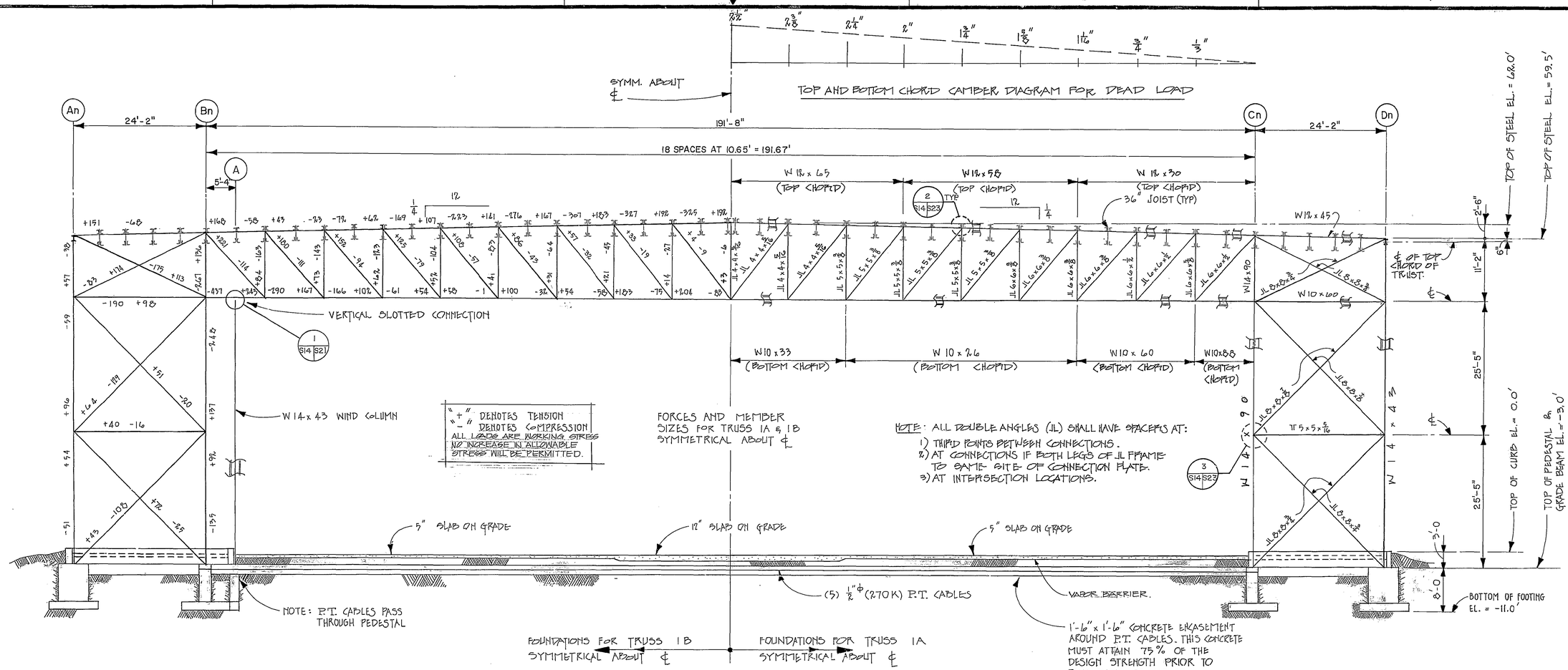

ROOF TRUSS 1A & 1B

SCALE: 1/8" = 1'-0"

NOTES:
1) SEE S-23 FOR NOTES.
2) SEE S-23 FOR TYPICAL CONNECTIONS.

SYMBOL	ZONE	DESCRIPTION	DATE	BY
		REVISIONS		

WURZ WISECARVER & PRUETT
ARCHITECTS ENGINEERS
ATLANTA GEORGIA

U. S. ARMY
ENGINEER DISTRICT, SAVANNAH
CORPS OF ENGINEERS
SAVANNAH, GEORGIA

NOSE DOCK EMPENNAGE ENCLOSURE

ROOF TRUSS 1A & 1B

ROBINS AIR FORCE BASE GEORGIA

SIZE	INVITATION NO.	DRAWING NO.	PLATE
F	DACA 21-85-B-0090	39-01-08	S-14

SCALE: 1/8" = 1'-0" SHEET 44

44

FORMAT 6

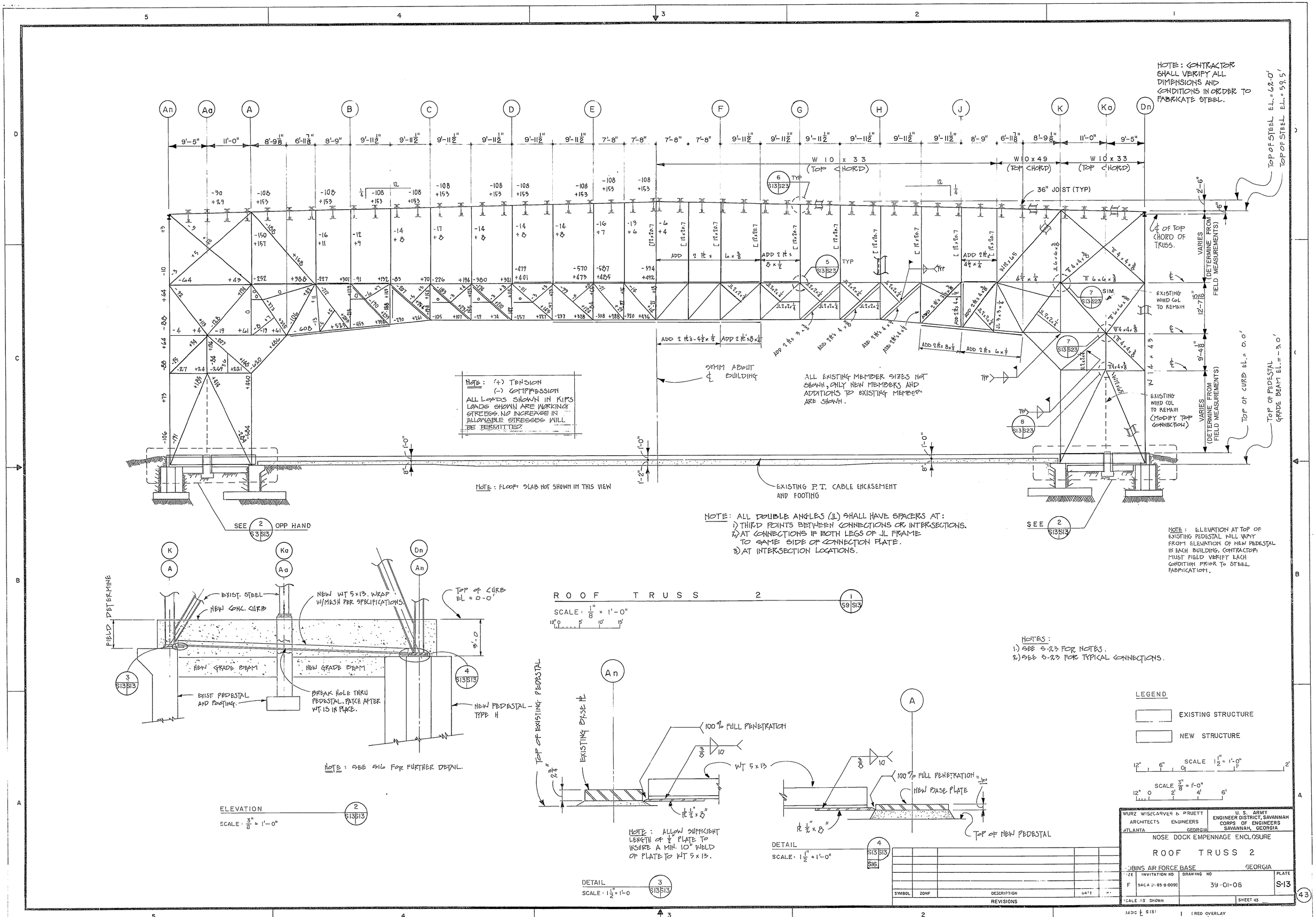

NOTE: CONTRACTOR SHALL VERIFY ALL DIMENSIONS AND CONDITIONS IN ORDER TO FABRICATE STEEL.
TOP OF STEEL EL. = 62.0'
TOP OF STEEL EL. = 59.5'
W 10 x 33 (TOP CHORD)
W 10 x 49 (TOP CHORD)
W 10 x 33 (TOP CHORD)
36" JOIST (TYP)
℄ OF TOP CHORD OF TRUSS.
VARIES (DETERMINE FROM FIELD MEASUREMENTS)
EXISTING WIND COL TO REMAIN
EXISTING WIND COL TO REMAIN (MODIFY TOP CONNECTION)
TOP OF CURB EL. = 0.0'
TOP OF PEDESTAL GRADE BEAM EL. = -3.0'
SYMM ABOUT ℄ BUILDING
ALL EXISTING MEMBER SIZES NOT SHOWN, ONLY NEW MEMBERS AND ADDITIONS TO EXISTING MEMBERS ARE SHOWN.
NOTE: (+) TENSION
(-) COMPRESSION
ALL LOADS SHOWN IN KIPS LOADS SHOWN ARE WORKING STRESSES. NO INCREASE IN ALLOWABLE STRESSES WILL BE PERMITTED.
NOTE: FLOOR SLAB NOT SHOWN IN THIS VIEW
EXISTING P.T. CABLE ENCASEMENT AND FOOTING
SEE 2 S3 S13 OPP HAND
SEE 2 S13 S13
NOTE: ALL DOUBLE ANGLES (JL) SHALL HAVE SPACERS AT:
1) THIRD POINTS BETWEEN CONNECTIONS OR INTERSECTIONS.
2) AT CONNECTIONS IF BOTH LEGS OF JL FRAME TO SAME SIDE OF CONNECTION PLATE.
3) AT INTERSECTION LOCATIONS.
NOTE: ELEVATION AT TOP OF EXISTING PEDESTAL WILL VARY FROM ELEVATION OF NEW PEDESTAL IN EACH BUILDING. CONTRACTOR MUST FIELD VERIFY EACH CONDITION PRIOR TO STEEL FABRICATION.
ROOF TRUSS 2
SCALE: 1/8" = 1'-0"
NOTES:
1.) SEE S-23 FOR NOTES.
2.) SEE S-23 FOR TYPICAL CONNECTIONS.
FIELD DETERMINE
EXIST. STEEL
NEW CONC. CURB
NEW WT 5x13. WRAP W/MESH PER SPECIFICATIONS.
TOP OF CURB EL = 0-0'
NEW GRADE BEAM
NEW GRADE BEAM
EXIST PEDESTAL AND FOOTING.
BREAK HOLE THRU PEDESTAL. PATCH AFTER WT. IS IN PLACE.
NEW PEDESTAL - TYPE H
NOTE: SEE S16 FOR FURTHER DETAIL.
ELEVATION
SCALE: 3/8" = 1'-0"
TOP OF EXISTING PEDESTAL
EXISTING BASE PL
100% FULL PENETRATION
WT 5x13
NOTE: ALLOW SUFFICIENT LENGTH OF 1/2" PLATE TO INSURE A MIN. 10" WELD OF PLATE TO WT 5x13.
DETAIL
SCALE: 1 1/2" = 1'-0
100% FULL PENETRATION
NEW BASE PLATE
TOP OF NEW PEDESTAL
DETAIL
SCALE: 1 1/2" = 1'-0"
LEGEND
EXISTING STRUCTURE
NEW STRUCTURE
SCALE 1 1/2" = 1'-0"
SCALE 3/8" = 1'-0"
WURZ WISECARVER & PRUETT ARCHITECTS ENGINEERS ATLANTA GEORGIA
U. S. ARMY ENGINEER DISTRICT, SAVANNAH CORPS OF ENGINEERS SAVANNAH, GEORGIA
NOSE DOCK EMPENNAGE ENCLOSURE
ROOF TRUSS 2
ROBINS AIR FORCE BASE GEORGIA
SIZE F
INVITATION NO DACA 21-85-B-0090
DRAWING NO 39-01-08
PLATE S-13
SCALE AS SHOWN
SHEET 43
SYMBOL ZONE DESCRIPTION DATE
REVISIONS
BASIC ℄ S13
RED OVERLAY FOR ℄ S13
FORMAT 6
43

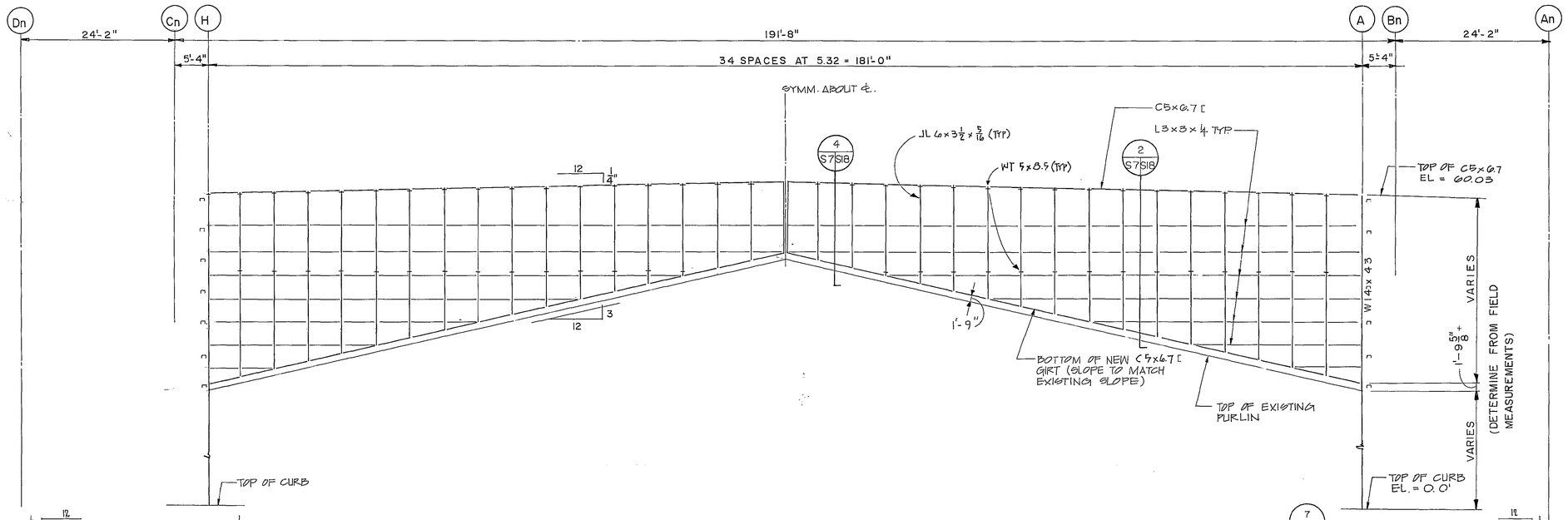

ELEVATION 1 S2 S7 S4

SCALE: 1/8" = 1'-0"

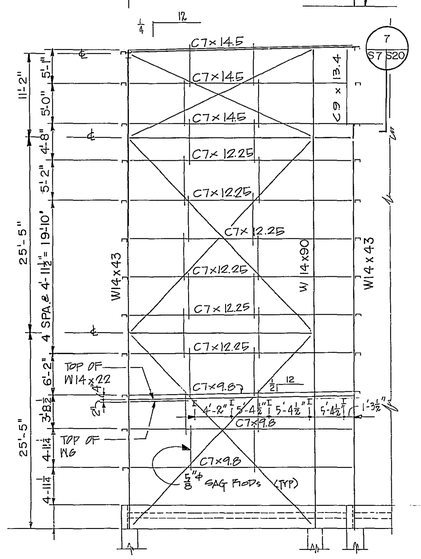

SEE S-14 FOR FOUNDATION

ELEVATION AT COLUMN LINE In 2 S2 S7

SCALE: 1/8" = 1'-0"

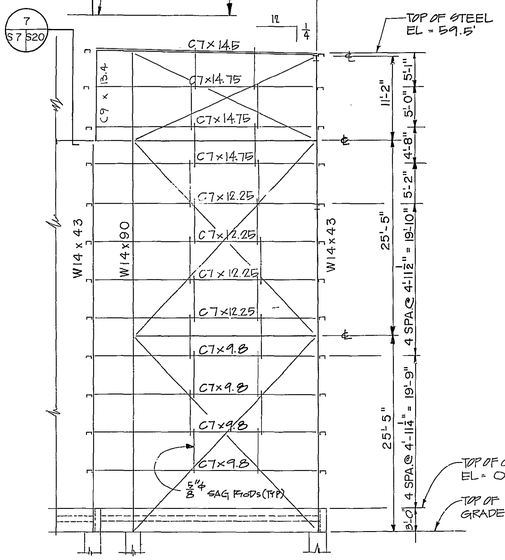

SEE S-14 FOR FOUNDATION

ELEVATION 3 S2 S7 S4

SCALE: 1/8" = 1'-0"

NOTES

1) SEE S-23 FOR NOTES.
2) SEE S-22 FOR WIND GIRT CONNECTIONS.

SCALE 1/8" = 1'-0"

SYMBOL	ZONE	DESCRIPTION	DATE	BY
		REVISIONS		

WURZ WISECARVER & PRUETT
ARCHITECTS ENGINEERS
ATLANTA GEORGIA

U. S. ARMY
ENGINEER DISTRICT, SAVANNAH
CORPS OF ENGINEERS
SAVANNAH, GEORGIA

NOSE DOCK EMPENNAGE ENCLOSURE
BUILDING 44
EXTERIOR ELEVATIONS

ROBINS AIR FORCE BASE GEORGIA

SIZE	INVITATION NO.	DRAWING NO.	PLATE
F	DACA 21-85-B-0090	39-01-08	S-7

SCALE: 1/8" = 1'-0" SHEET 37

37

FORMAT 6

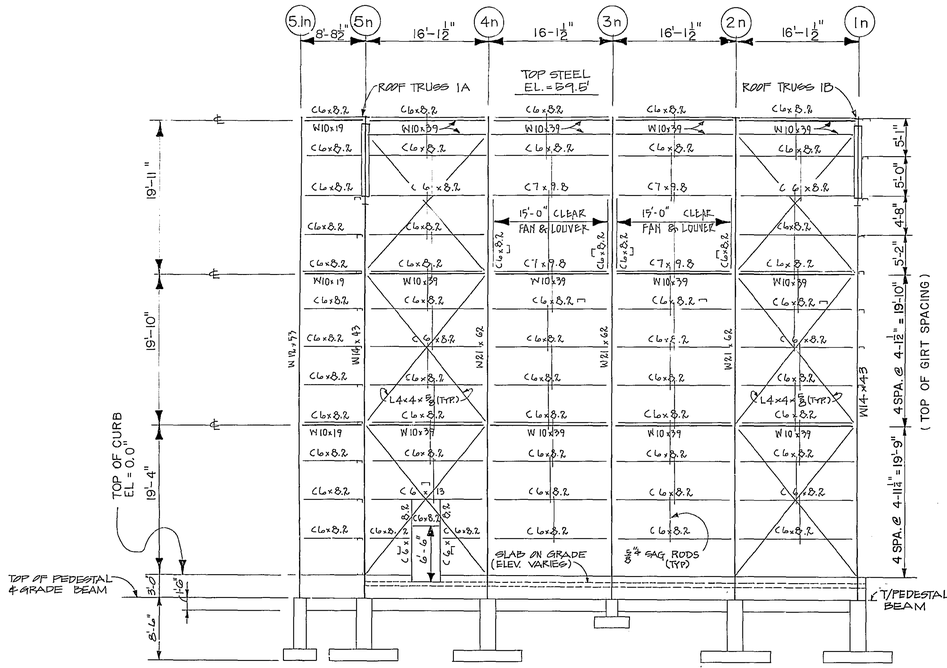

ELEVATION
SCALE: ⅛" = 1'-0"

SEE 2 / S6 S21 FOR X BRACING DETAILS

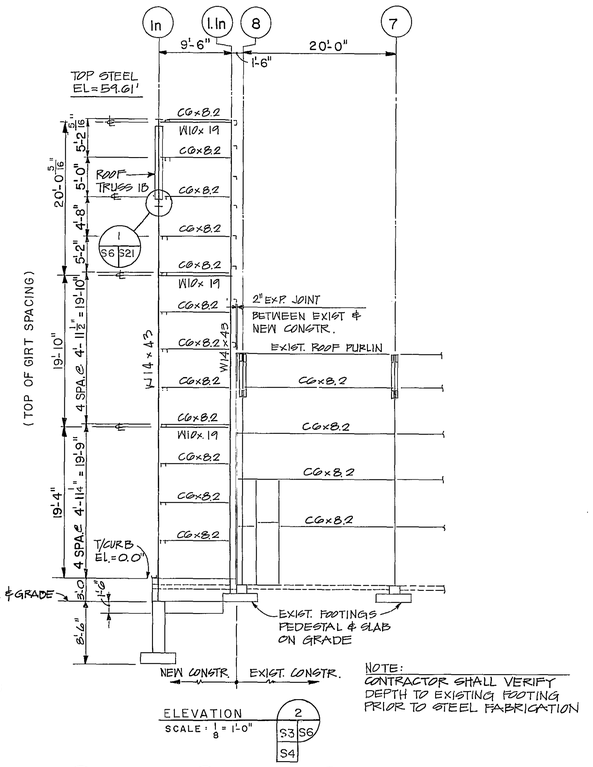

NOTE:
CONTRACTOR SHALL VERIFY DEPTH TO EXISTING FOOTING PRIOR TO STEEL FABRICATION

ELEVATION
SCALE: ⅛" = 1'-0"

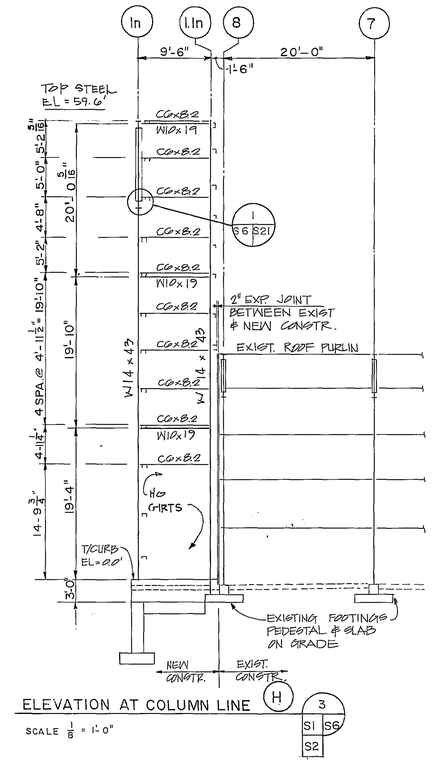

ELEVATION AT COLUMN LINE (H)
SCALE ⅛" = 1'-0"

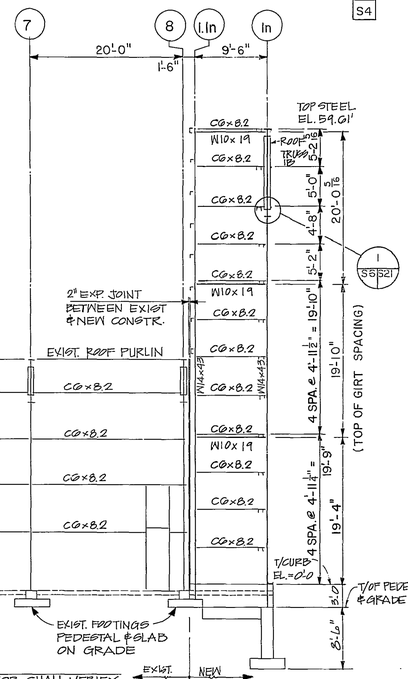

NOTE.
CONTRACTOR SHALL VERIFY DEPTH TO EXISTING FOOTING PRIOR TO STEEL FABRICATION

ELEVATION
SCALE: ⅛" = 1'-0"

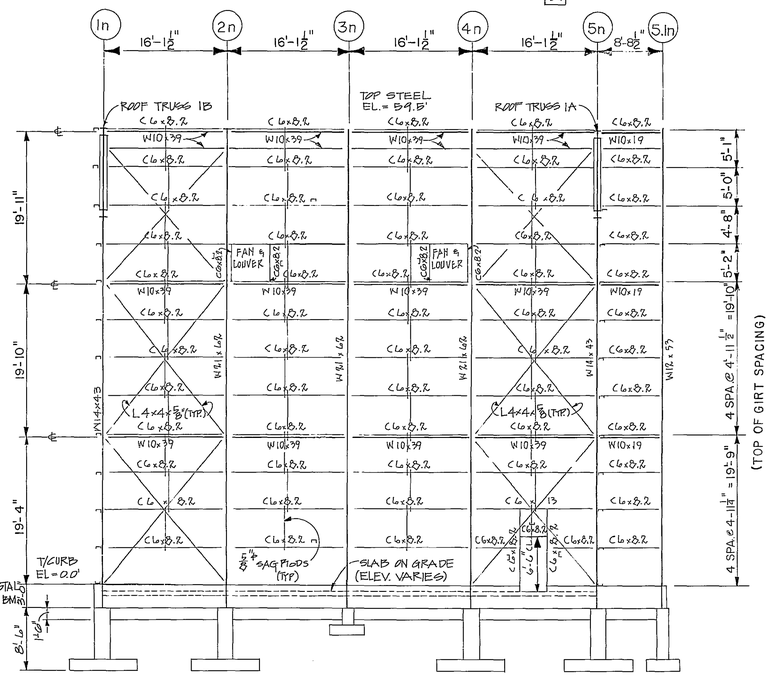

ELEVATION
SCALE: ⅛" = 1'-0"

SEE 2 / S6 S21 FOR X BRACING DETAILS.

NOTES:
1) SEE S23 FOR NOTES.
2) SEE S22 FOR WIND GIRT CONNECTIONS.

12'0 5' 10' 15'
SCALE ⅛" = 1'-0"

SYMBOL	ZONE	DESCRIPTION	DATE	BY
		REVISIONS		

WURZ WISECARVER & PRUETT
ARCHITECTS ENGINEERS
ATLANTA GEORGIA

U. S. ARMY
ENGINEER DISTRICT, SAVANNAH
CORPS OF ENGINEERS
SAVANNAH, GEORGIA

NOSE DOCK EMPENNAGE ENCLOSURE

BUILDING 44
EXTERIOR ELEVATIONS

ROBINS AIR FORCE BASE GEORGIA

SIZE	INVITATION NO.	DRAWING NO.	PLATE
F	DACA 21-85-B-0090	39-01-08	S-6

SCALE ⅛"=1'-0" SHEET 36

36

FORMAT 6

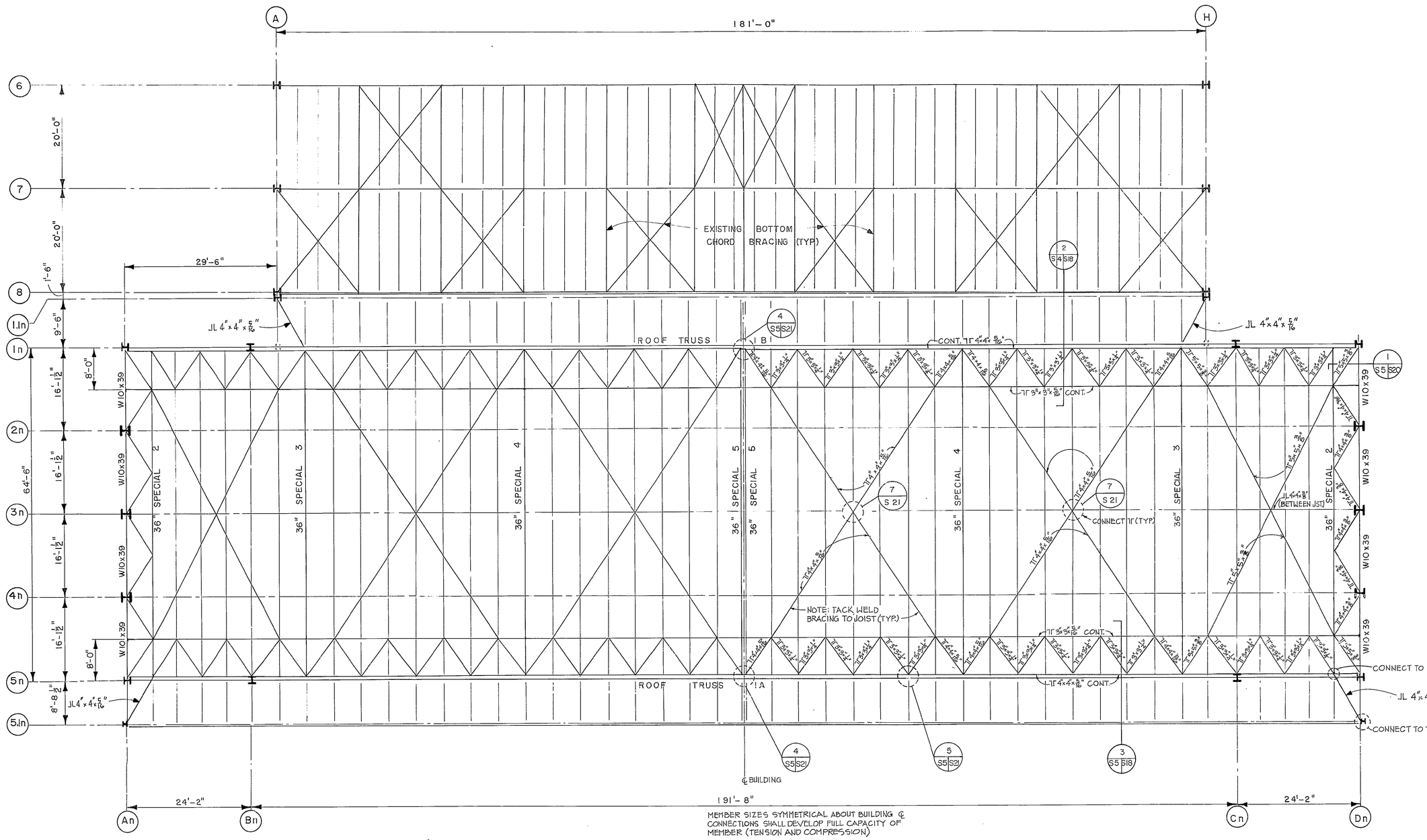

BOTTOM CHORD BRACING REFLECTED PLAN (1 / S5 S5)

SCALE: 1/8" = 1'-0"

12" 0 5' 10' 15'

NOTES

1) SEE SHEETS S2 & S4 FOR ROOF FRAMING DETAILS.
2) SEE S 23 FOR NOTES

LEGEND

EXISTING STRUCTURE

NEW STRUCTURE

SYMBOL	ZONE	DESCRIPTION	DATE	BY
		REVISIONS		

WURZ WISECARVER & PRUETT
ARCHITECTS ENGINEERS
ATLANTA GEORGIA

U. S. ARMY
ENGINEER DISTRICT, SAVANNAH
CORPS OF ENGINEERS
SAVANNAH, GEORGIA

NOSE DOCK EMPENNAGE ENCLOSURE

BUILDING 44
BOTTOM CHORD BRACING

ROBINS AIR FORCE BASE GEORGIA

SIZE	INVITATION NO	DRAWING NO	PLATE
F	DACA 21-85 B 0090	39-01-08	S-5

SCALE: 1/8" = 1'-0" SHEET 35

(35)

FORMAT 6

ROOF FRAMING PLAN

SCALE 1/8" = 1'-0"

NOTES

1) SEE S-23 FOR NOTES.
2) SEE S-16 FOR COLUMN SCHEDULE.
3) SEE S-22 FOR WINDGIRT CONNECTIONS.
4) SEE S-5 FOR BOTTOM CHORD BRACING

LEGEND

EXISTING STRUCTURE

NEW STRUCTURE

WURZ WISECARVER & PRUETT ARCHITECTS ENGINEERS ATLANTA GEORGIA	U. S. ARMY ENGINEER DISTRICT, SAVANNAH CORPS OF ENGINEERS SAVANNAH, GEORGIA
NOSE DOCK EMPENNAGE ENCLOSURE	
BUILDING 44 ROOF FRAMING PLAN	
ROBINS AIR FORCE BASE	GEORGIA
INVITATION NO DACA 21-85-B-0090	DRAWING NO 39-01-08 / PLATE S-2
SCALE 1/8" = 1'-0"	SHEET 32

REVISIONS: SYMBOL | ZONE | DESCRIPTION | DATE | BY

(BASIC SHT ℄ S2) (RED OVERLAY FOR ℄ S2)

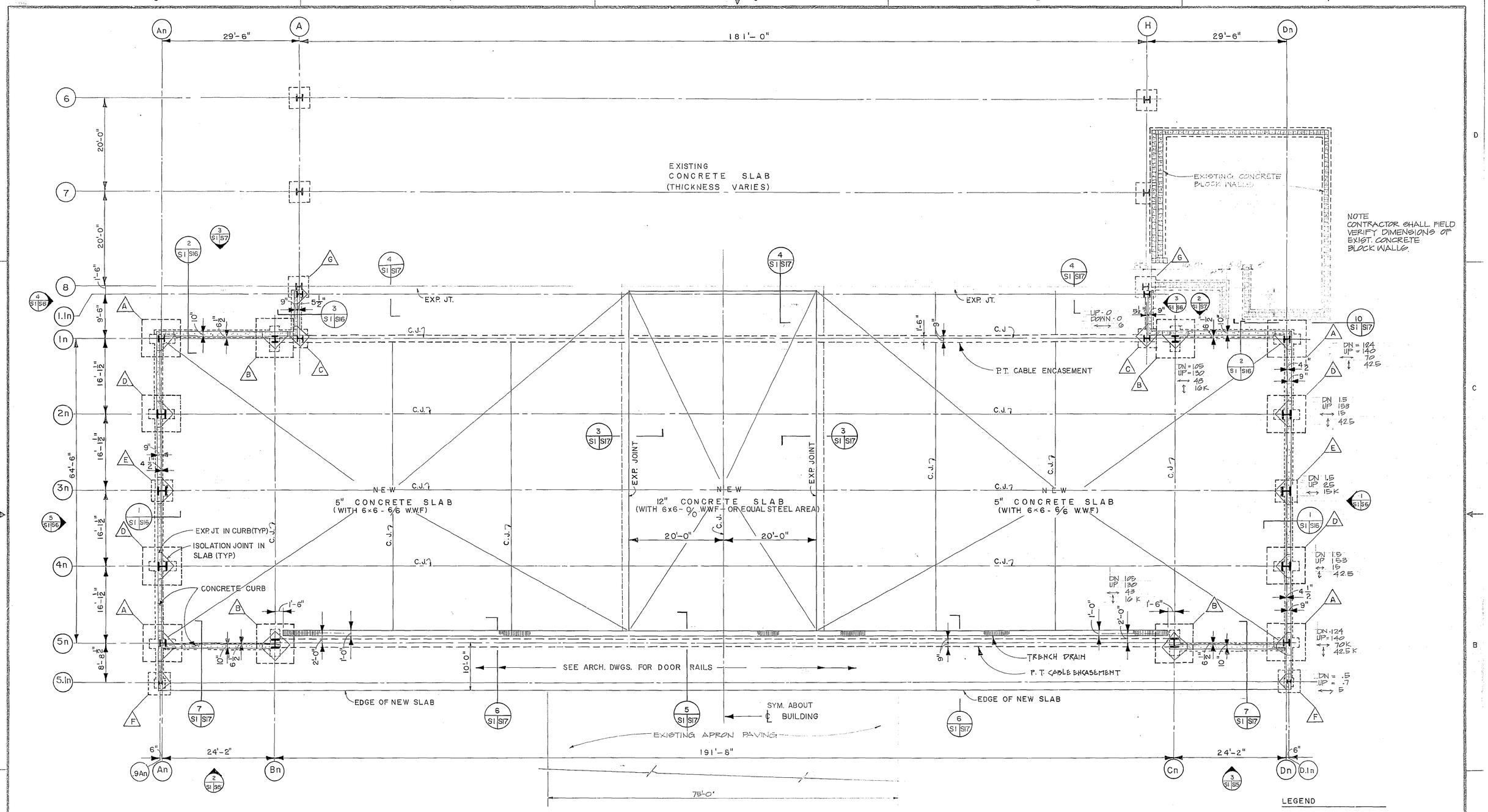

FOUNDATION PLAN (1 / S1 S1)

SCALE: 1/8" = 1'-0"

LEGEND

EXISTING STRUCTURE

NEW STRUCTURE

NOTES:

1) TOP OF CURB = 0.0' = 284.10'
2) SEE SHEET P2 FOR LOCATIONS OF UNDERGROUND UTILITIES PRIOR TO EXCAVATING.
3) CONTRACTOR SHALL LOCATE CONSTRUCTION JOINTS @ CONTRACTATION JOINTS AS REQUIRED, SEE SHEET S-17 FOR TYPICAL DETAILS.
4) ALL SLAB ON GRADE SHALL RECEIVE A HARDENER PER THE SPECIFICATIONS.
5) C.J. DENOTES CONTRACTION JOINT
6) SEE S-23 FOR NOTES.
7) SEE S-16 FOR FOUNDATION AND COLUMN SCHEDULE.
8) SEE S-16 & S-17 FOR FOUNDATION DETAILS
9) REACTIONS INDICATED ARE IN KIPS. UPLIFT REACTIONS INCLUDE A 1.5 SAFETY FACTOR. REACTION ARE SYMMETRICAL ABOUT BUILDING ℄.
10) REACTIONS SHOWN ARE WORKING STREES AND NO INCREASE IN ALLOWABLE STRESSES IS PERMITTED
11) NEW SLAB SHALL MATCH ELEVATION OF EXISTING SLAB @ INTERFACES. SLOPE SHALL BE UNIFORM BETWEEN INTERFACES.

SYMBOL	ZONE	DESCRIPTION	DATE	BY
		REVISIONS		

DESIGN	CHECK	WURZ / WISECARVER & PRUETT ARCHITECTS ENGINEERS ATLANTA GEORGIA	U.S. ARMY ENGINEER DISTRICT, SAVANNAH CORPS OF ENGINEERS SAVANNAH, GEORGIA
JBF	JOK		

PREPARED BY: James A. O'Kon
PROJECT MANAGER
RECOMMENDED: [signature]
CHIEF, MIL. PRG. & MGMT. BRANCH
DATE: 01 SEPT 83

NOSE DOCK EMPENNAGE ENCLOSURE

BUILDING 44 FOUNDATION PLAN

RUBINS AIR FORCE BASE GEORGIA

SIZE	INVITATION NO.	DRAWING NO.	PLATE
F	DACA21-85-B-0090	39-01-08	S-1

SCALE: 1/8" = 1'-0" SHEET 31

BASIC SHT. FOR PL S-1 | IRED OVERLAY FOR PL S-1)

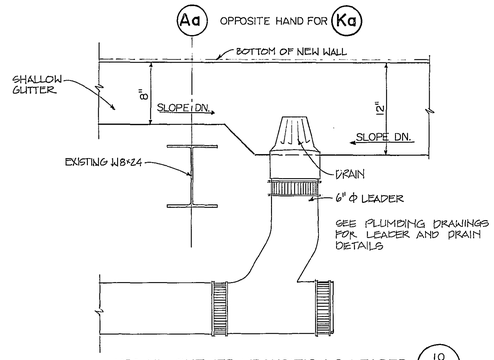

DETAIL-GUTTER TRANSITION & LEADER (10 / A-13 | A20)
BLDGS. 47,48,49
SCALE $1\frac{1}{2}$"= 1'-0"

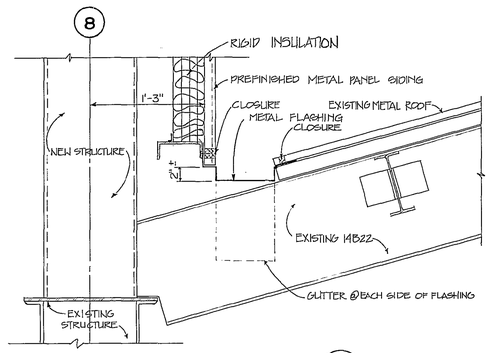

DETAIL-FLASHING (9 / A-13 | A20)
℄ BLDGS. 47,48,49
SCALE $1\frac{1}{2}$"= 1'-0"

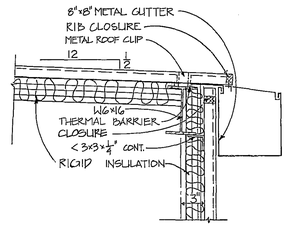

DETAIL - EAVE (4 / A-9 | A20)
LOW ROOF - BLDG. 44
SCALE $1\frac{1}{2}$"= 1'-0"

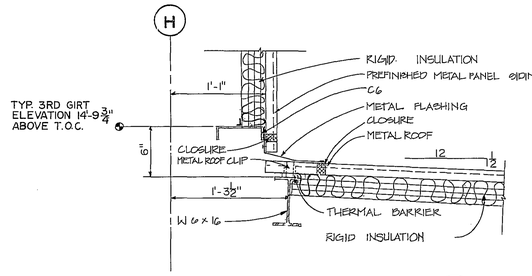

DETAIL-FLASHING (3 / A-9 | A20)
LOW ROOF-BLDG.44
SCALE $1\frac{1}{2}$"= 1'-0"

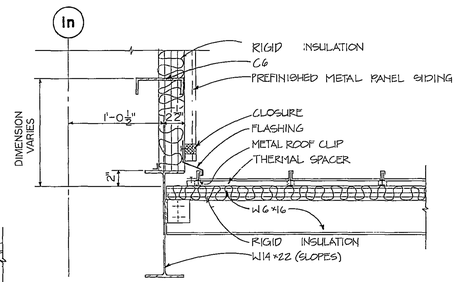

DETAIL- FLASHING (5 / A-9 | A20)
LOW ROOF - BLDG. 44
SCALE $1\frac{1}{2}$"= 1'-0"

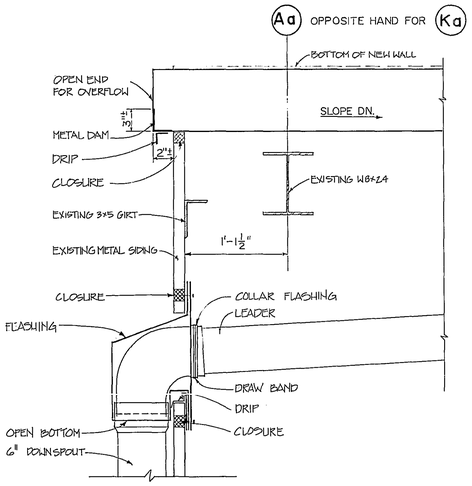

DETAIL-SHALLOW GUTTER, LEADER & D.S. (11 / A-13 | A20 / A-14 / A-15)
BLDGS. 47,48,49
SCALE $1\frac{1}{2}$"= 1'-0"

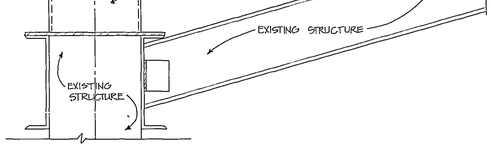

DETAIL-SHALLOW GUTTER (8 / A-13 | A20 / A16)
BLDGS. 47,48,49
SCALE $1\frac{1}{2}$"= 1'-0"

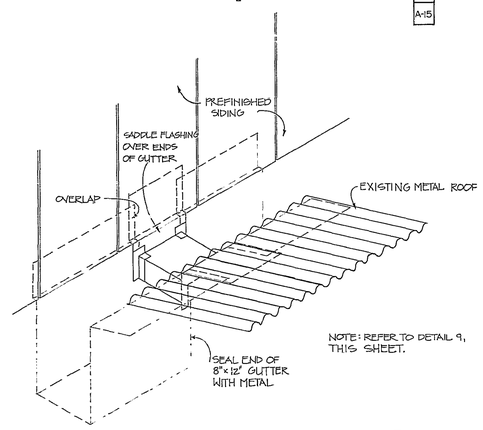

NOTE: REFER TO DETAIL 9, THIS SHEET.

ISOMETRIC-SADDLE FLASHING (12 / A-13 | A20)
℄ BLDGS. 47,48,49
SCALE $1\frac{1}{2}$"= 1'-0"

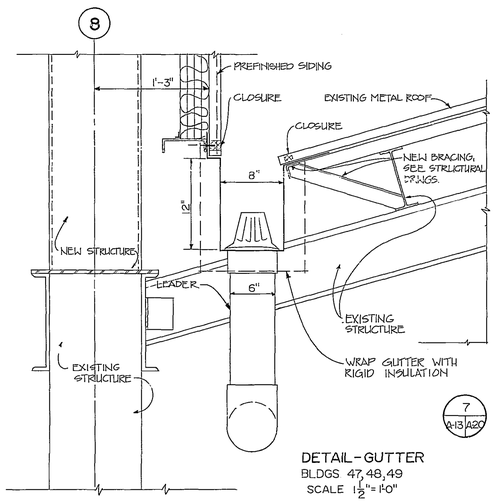

DETAIL-GUTTER (7 / A-13 | A20)
BLDGS 47,48,49
SCALE $1\frac{1}{2}$"= 1'-0"

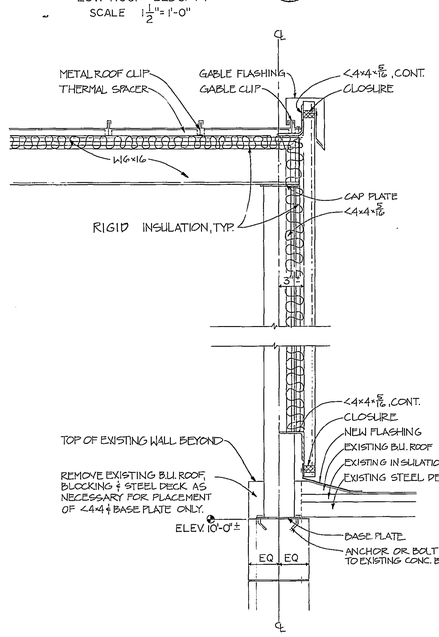

DETAIL - EAVE & FLASHING (6 / A-9 | A20)
LOW ROOF - BLDG. 44
SCALE $1\frac{1}{2}$"= 1'-0"

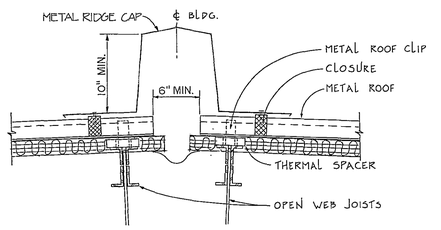

DETAIL - RIDGE CAP (1 / A-2 | A-20 / A-4 / A-6 | A-6 / A-15 | A-7 / A-12 | A-9 / A-13 | A-10)
SCALE $1\frac{1}{2}$"= 1'-0"
12" 6" 0 1'

NOTE: ALL WORK ON THIS SHEET IS NEW, UNLESS OTHERWISE NOTED.

SYMBOL	ZONE	DESCRIPTION	DATE	BY

REVISIONS

WURZ, WISECARVER & PRUETT ARCHITECTS
ATLANTA GEORGIA

U. S. ARMY ENGINEER DISTRICT, SAVANNAH CORPS OF ENGINEERS
SAVANNAH, GEORGIA

NOSE DOCK EMPENNAGE ENCLOSURE

MISCELLANEOUS DETAILS

ROBINS AIR FORCE BASE GEORGIA

SIZE	INVITATION NO.	DRAWING NO.	PLATE
F	DACA21-85-B-0090	39-01-08	A-20

SCALE AS NOTED SHEET 30

30

FORMAT 6

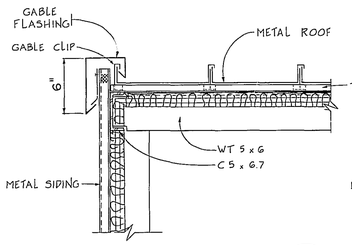

DETAIL - EAVE

SCALE 1½" = 1'-0"

12 | A-3 | A-19 | A-7 | A-15 | A-17

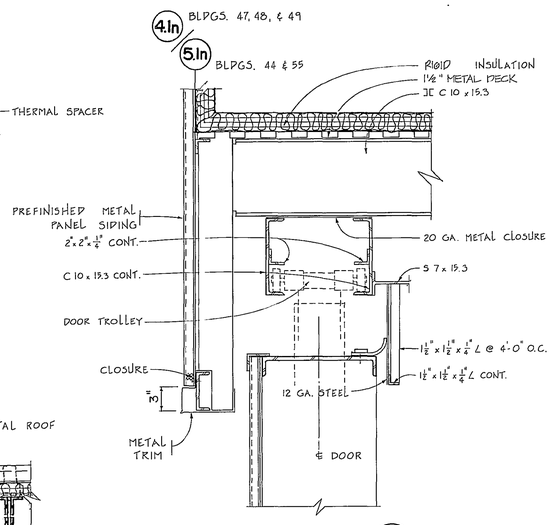

DETAIL - OVERHEAD FLASHING

SCALE 1½" = 1'-0"

11 | A-17 | A-19

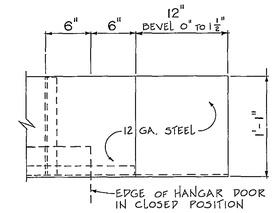

DETAIL - OVERHEAD FLASHING

SCALE 1½" = 1'-0"

7 | A-19 | A-19

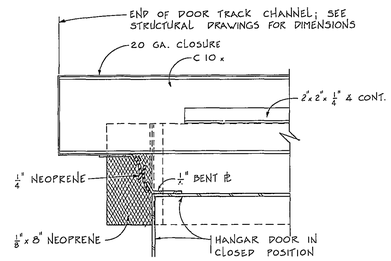

DETAIL - OVERHEAD FLASHING

SCALE 1½" = 1'-0"

6 | A-19 | A-19

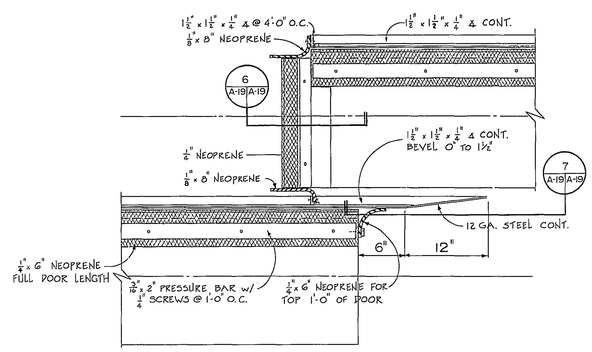

DETAIL - OVERHEAD FLASHING

SCALE 1½" = 1'-0"

5 | A-19 | A-19

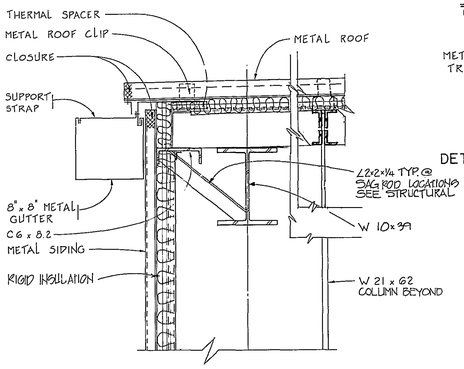

DETAIL - EAVE

SCALE 1½" = 1'-0"

13 | A-3 | A-19 | A-4 | A-15 | A-7 | A-14 | A-8

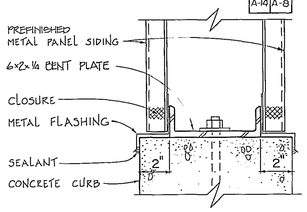

DETAIL - SILL & FLASHING

SCALE 3" = 1'-0"

14 | A-17 | A-19

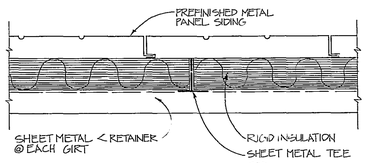

DETAIL

TYPICAL VERTICAL JOINT AT WALL INSULATION

SCALE 3" = 1'-0"

16 | A-19 | A-19

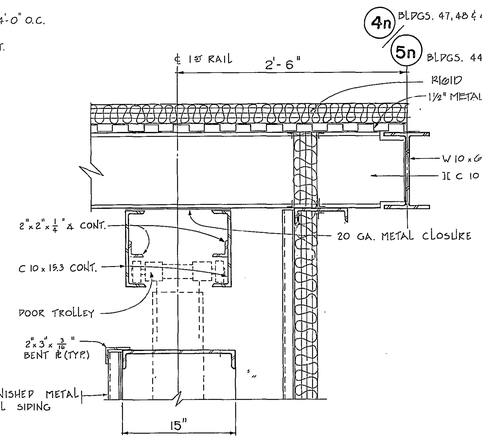

DETAIL - OVERHEAD FLASHING

SCALE 1½" = 1'-0"

8 | A-17 | A-19

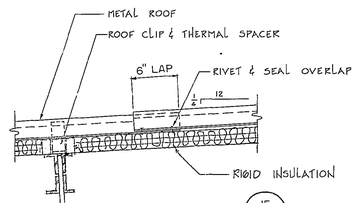

DETAIL - ROOF OVERLAP

SCALE 1½" = 1'-0"

15 | A-19 | A-19

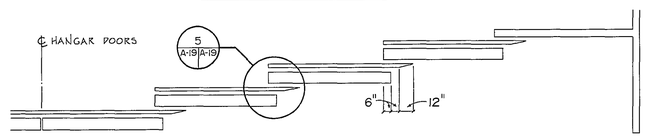

HALF PLAN - OVERHEAD FLASHING

NOT TO SCALE

4 | A-19 | A-19

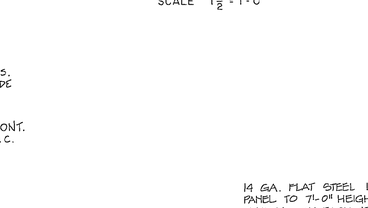

DETAIL

SCALE 3" = 1'-0"

10 | A-19 | A-19

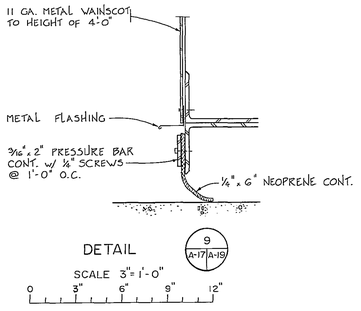

DETAIL

SCALE 3" = 1'-0"

9 | A-17 | A-19

0 3" 6" 9" 12"

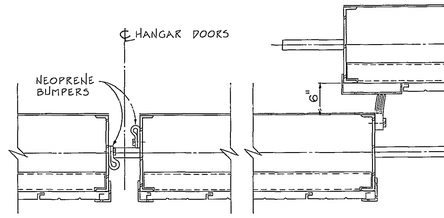

DETAIL

SCALE 1" = 1'-0"

3 | A-1 | A-19 | A-5 | A-10 | A-11 | A-12

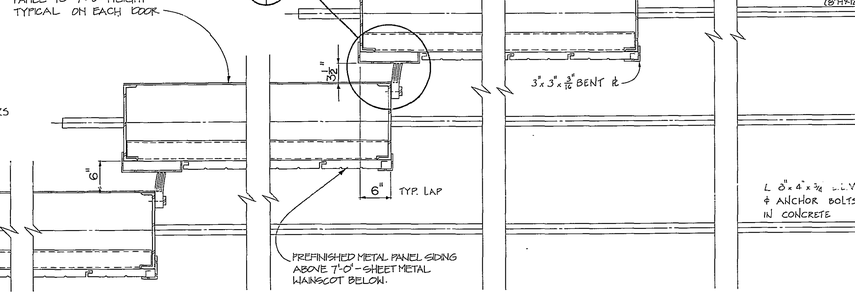

DETAIL

SCALE 1" = 1'-0"

2 | A-1 | A-19 | A-5 | A-10 | A-11 | A-12

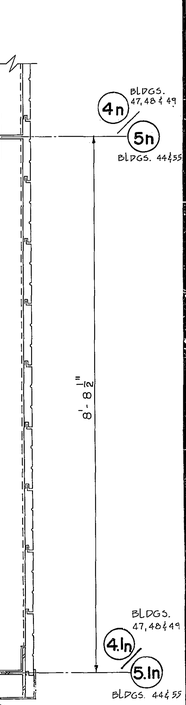

PLAN - HANGAR DOORS

SCALE 1" = 1'-0"

12" 6" 0 1'

1 | A-1 | A-19 | A-5 | A-10 | A-11 | A-12

NOTE: ALL WORK ON THIS SHEET IS NEW UNLESS OTHERWISE NOTED.

SYMBOL	ZONE	DESCRIPTION	DATE	BY
		REVISIONS		

WURZ, WISECARVER & PRUETT ARCHITECTS
ATLANTA GEORGIA

U. S. ARMY ENGINEER DISTRICT, SAVANNAH CORPS OF ENGINEERS SAVANNAH, GEORGIA

NOSE DOCK EMPENNAGE ENCLOSURE

HANGAR DOOR & MISC. DETAILS

ROBINS AIR FORCE BASE GEORGIA

SIZE	INVITATION NO.	DRAWING NO.	PLATE
F	DACA21-85-B-0090	39-01-08	A-19
SCALE AS NOTED		SHEET 29	

29

FORMAT 6

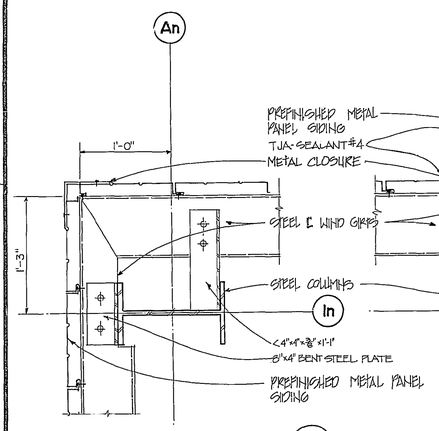

DETAIL AT CORNER

SCALE 1½"=1'-0"

BUILDINGS 44 & 55 ONLY

14 | A-1 | A-18 | A-5

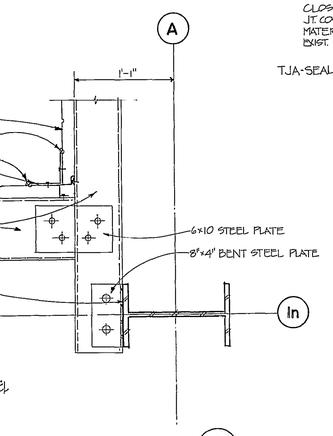

DETAIL AT CORNER

SCALE 1½"=1'-0"

BUILDINGS 44 & 55 ONLY

13 | A-1 | A-18 | A-5

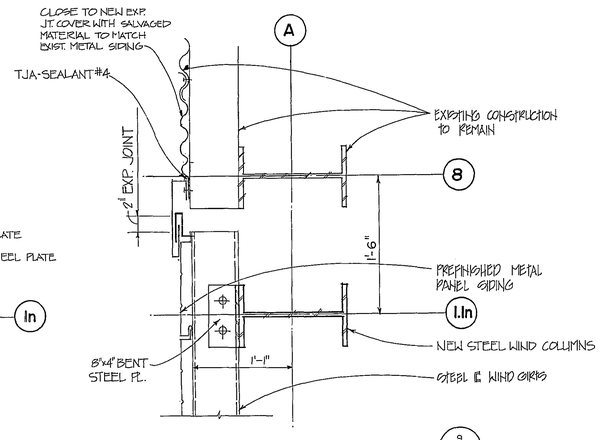

EXPANSION JOINT DETAIL

SCALE 1½"=1'-0"

BUILDINGS 44 & 55 ONLY

9 | A-1 | A-18 | A-3 | A-4 | A-5 | A-7 | A-8

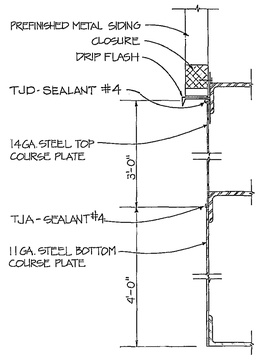

DETAIL - HANGAR DOOR

SCALE 3"=1'-0"

16 | A-17 | A-18

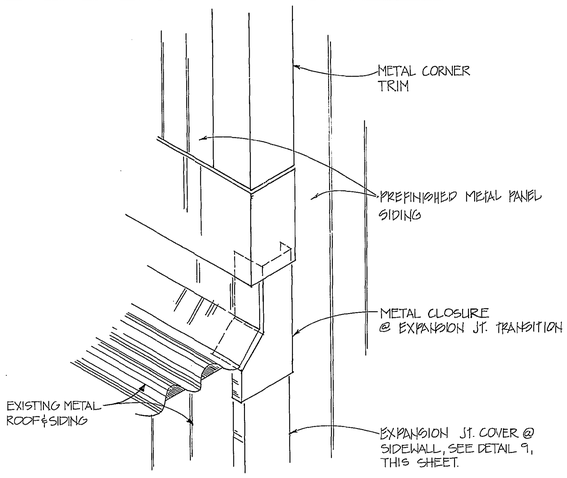

EXPANSION JOINT TRANSITION

SCALE 1½"=1'-0"

15 | A-18 | A-18

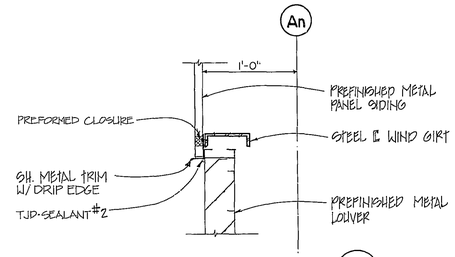

LOUVER HEAD DETAIL

SCALE 1½"=1'-0"

6 | A-3 | A-18 | A-4 | A-7 | A-8 | A-14 | A-15

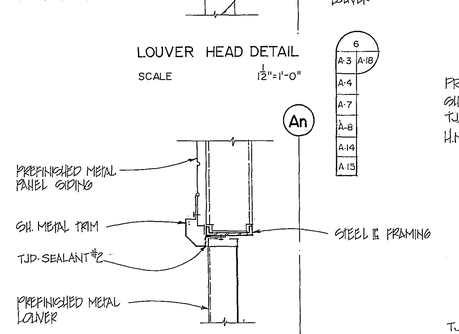

LOUVER JAMB DETAIL

SCALE 1½"=1'-0"

5 | A-3 | A-18 | A-4 | A-7 | A-8 | A-14 | A-15

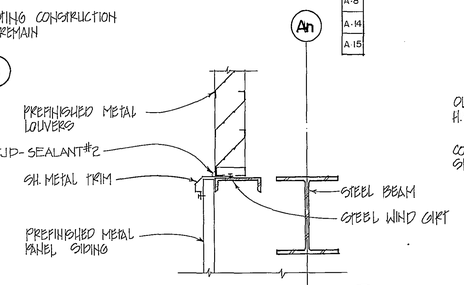

LOUVER SILL DETAIL

SCALE 1½"=1'-0"

4 | A-3 | A-18 | A-4 | A-7 | A-8 | A-14 | A-15

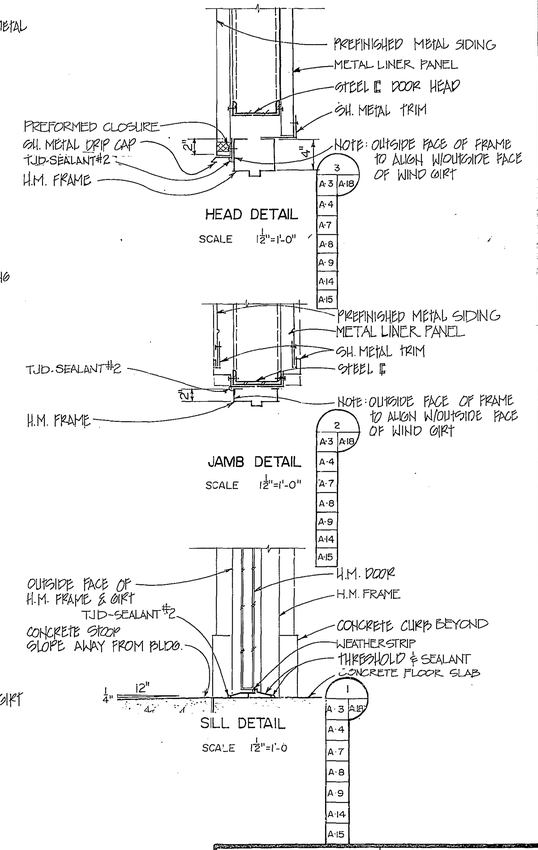

HEAD DETAIL

SCALE 1½"=1'-0"

3 | A-3 | A-18 | A-4 | A-7 | A-8 | A-9 | A-14 | A-15

JAMB DETAIL

SCALE 1½"=1'-0"

2 | A-3 | A-18 | A-4 | A-7 | A-8 | A-9 | A-14 | A-15

SILL DETAIL

SCALE 1½"=1'-0

1 | A-3 | A-18 | A-4 | A-7 | A-8 | A-9 | A-14 | A-15

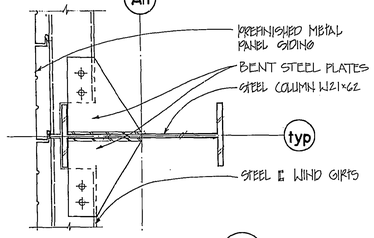

TYPICAL DETAIL

SCALE 1½"=1'-0"

12 | A-1 | A-18 | A-5 | A-10 | A-11 | A-12

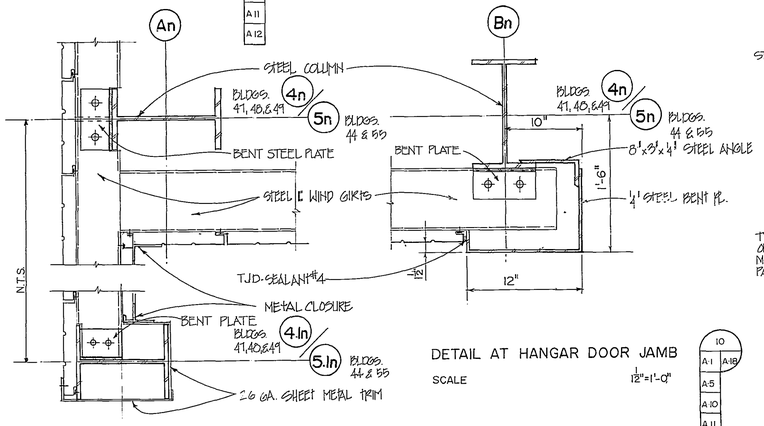

DETAIL AT HANGAR DOOR JAMB

SCALE 1½"=1'-0"

10 | A-1 | A-18 | A-5 | A-10 | A-11 | A-12

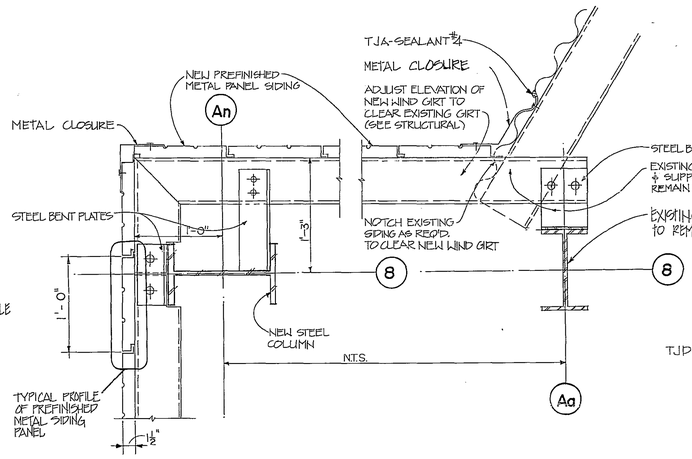

DETAIL AT CORNER

SCALE 1½"=1'-0"

BUILDINGS 47,48,& 49 ONLY

8 | A-10 | A-8 | A-11 | A-12

DETAIL AT INTERFACE

SCALE 1½"=1'-0"

BUILDINGS 47,48,& 49 ONLY

7 | A-10 | A-18 | A-11 | A-12

DETAIL AT WING WALL

SCALE 1½"=1'-0"

11 | A-1 | A-18 | A-5 | A-10 | A-11 | A-12

NOTE: ALL WORK ON THIS SHEET IS NEW UNLESS OTHERWISE NOTED.

SCALE 1½"=1'-0"

12" 6" 0 1'

SYMBOL	ZONE	DESCRIPTION	DATE	BY
		REVISIONS		

WURZ, WISECARVER & PRUETT ARCHITECTS
ATLANTA GEORGIA

U. S. ARMY ENGINEER DISTRICT, SAVANNAH CORPS OF ENGINEERS SAVANNAH, GEORGIA

NOSE DOCK EMPENNAGE ENCLOSURE
TYPICAL DETAILS

ROBINS AIR FORCE BASE GEORGIA

SIZE	INVITATION NO.	DRAWING NO	PLATE
F	DACA2-85-B-0090	39-01-08	A-18

SCALE AS NOTED SHEET 28

28

FORMAT 6

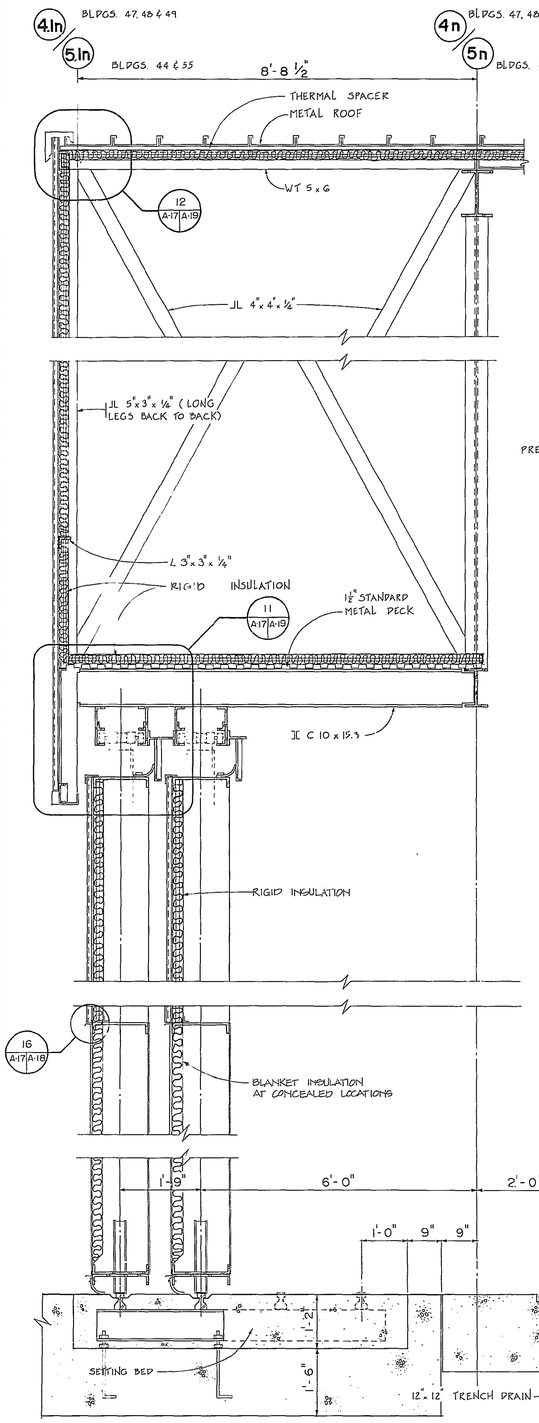

WALL SECTION
SCALE 3/4" = 1'-0"

1 | A-1 | A-17 | A-5 | A-10 | A-11 | A-12

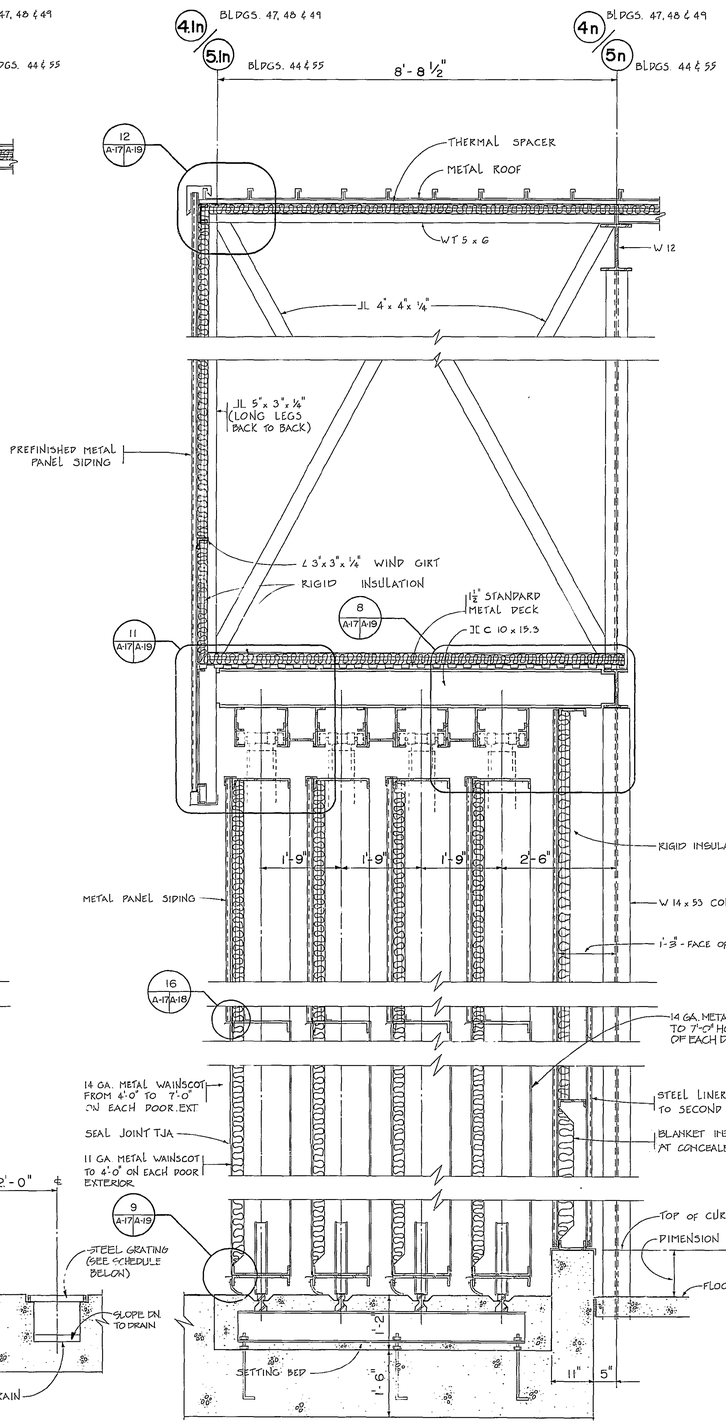

WALL SECTION
SCALE 3/4" = 1'-0"

2 | A-1 | A-17 | A-5 | A-10 | A-11 | A-12

TRENCH DRAIN GRATING

TO 20'-0" EACH SIDE OF BLDG ℄
BEARING BARS - 2 1/2" x 5/16" @ 2" o.c.
CROSS BARS - 3/8" HEX @ 3'o.c.

OUTSIDE 20'-0" OF BLDG ℄
BEARING BARS - 2 1/2" x 3/16" @ 2" o.c.
CROSS BARS - 5/16" HEX @ 3'o.c.

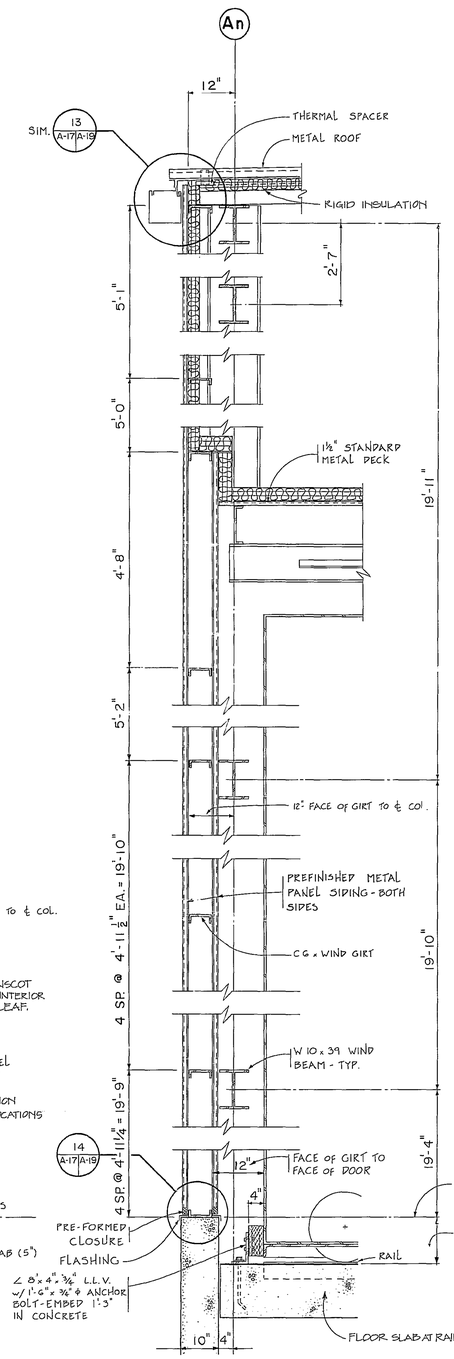

WALL SECTION
SCALE 3/4" = 1'-0"

3 | A-1 | A-17 | A-5 | A-10 | A-11 | A-12

NOTE: ALL WORK ON THIS SHEET IS NEW, UNLESS OTHERWISE NOTED.

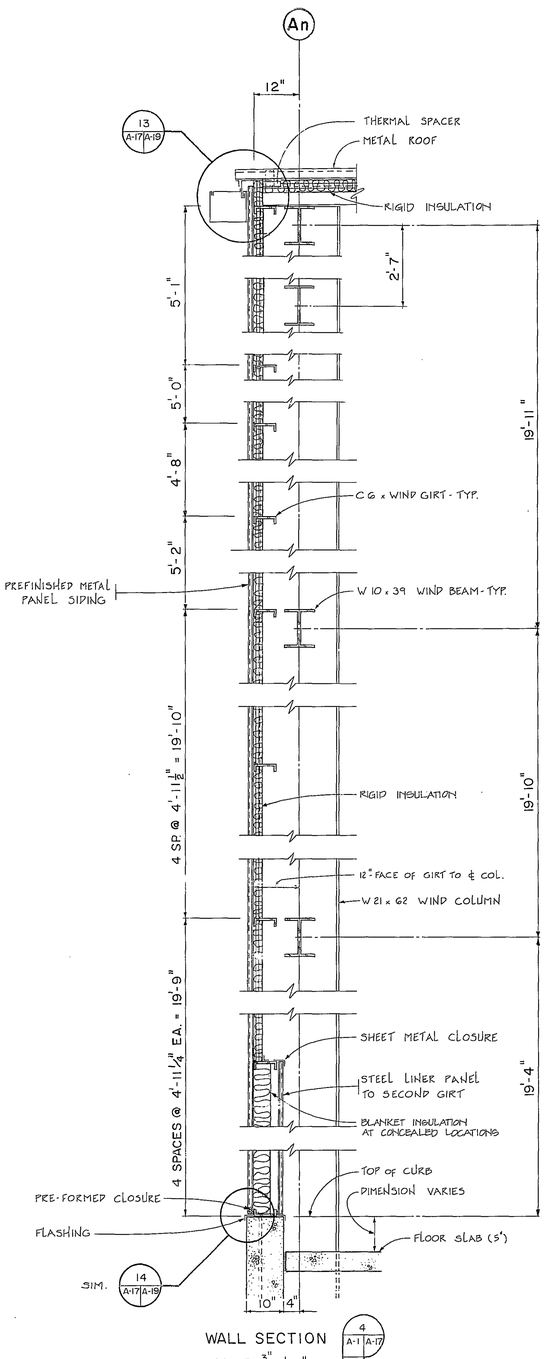

WALL SECTION
SCALE 3/4" = 1'-0"

4 | A-1 | A-17 | A-5 | A-10 | A-11 | A-12

SCALE 3/4" = 1'-0"
12" 6" 0' 1' 2'

SYMBOL	ZONE	DESCRIPTION	DATE	BY
		REVISIONS		

WURZ, WISECARVER & PRUETT ARCHITECTS
ATLANTA GEORGIA

U. S. ARMY ENGINEER DISTRICT, SAVANNAH CORPS OF ENGINEERS SAVANNAH, GEORGIA

NOSE DOCK EMPENNAGE ENCLOSURE

WALL SECTIONS

ROBINS AIR FORCE BASE GEORGIA

SIZE	INVITATION NO.	DRAWING NO.	PLATE
F	DACA21-85-B-0090	39-01-08	A-17

SCALE 3/4" = 1'-0" SHEET 27

27

FORMAT 6

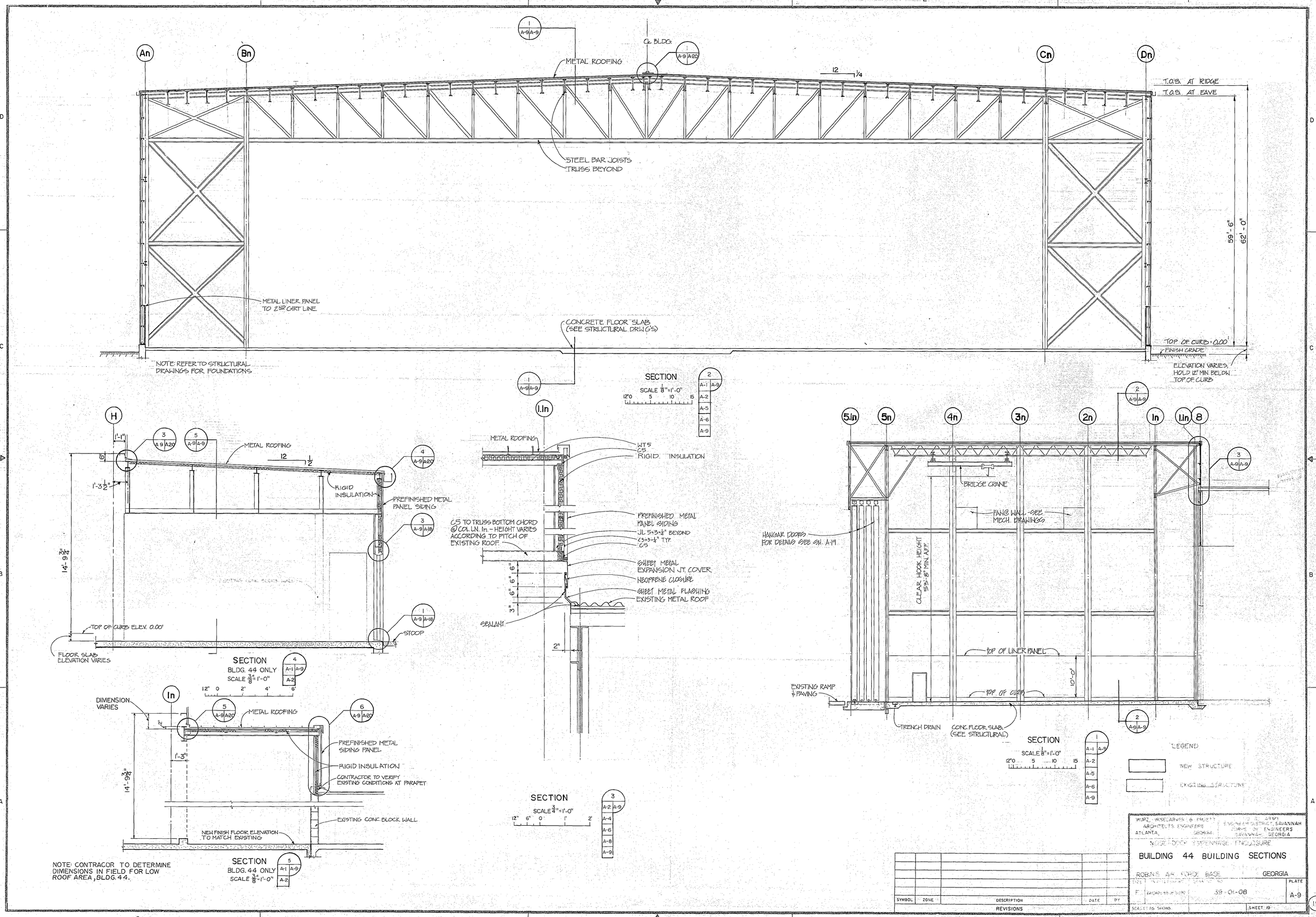

SYMBOL	ZONE	DESCRIPTION	DATE	BY
		REVISIONS		

WURZ, WISELARVER & PROJETT
ARCHITECTS ENGINEERS
ATLANTA, GEORGIA

U.S. ARMY
ENGINEER DISTRICT, SAVANNAH
CORPS OF ENGINEERS
SAVANNAH, GEORGIA

NOSE-DOCK EXPENSE ENCLOSURE

BUILDING 44 BUILDING SECTIONS

ROBINS AIR FORCE BASE GEORGIA

SIZE	DRAWING NO.	DATE	PLATE
F	39-01-06		A-9

SCALE AS SHOWN SHEET 19

19

FORMAT 6

TRACING SHEET A-9 (RED OVERLAY FOR BASIC R. A-9)

19

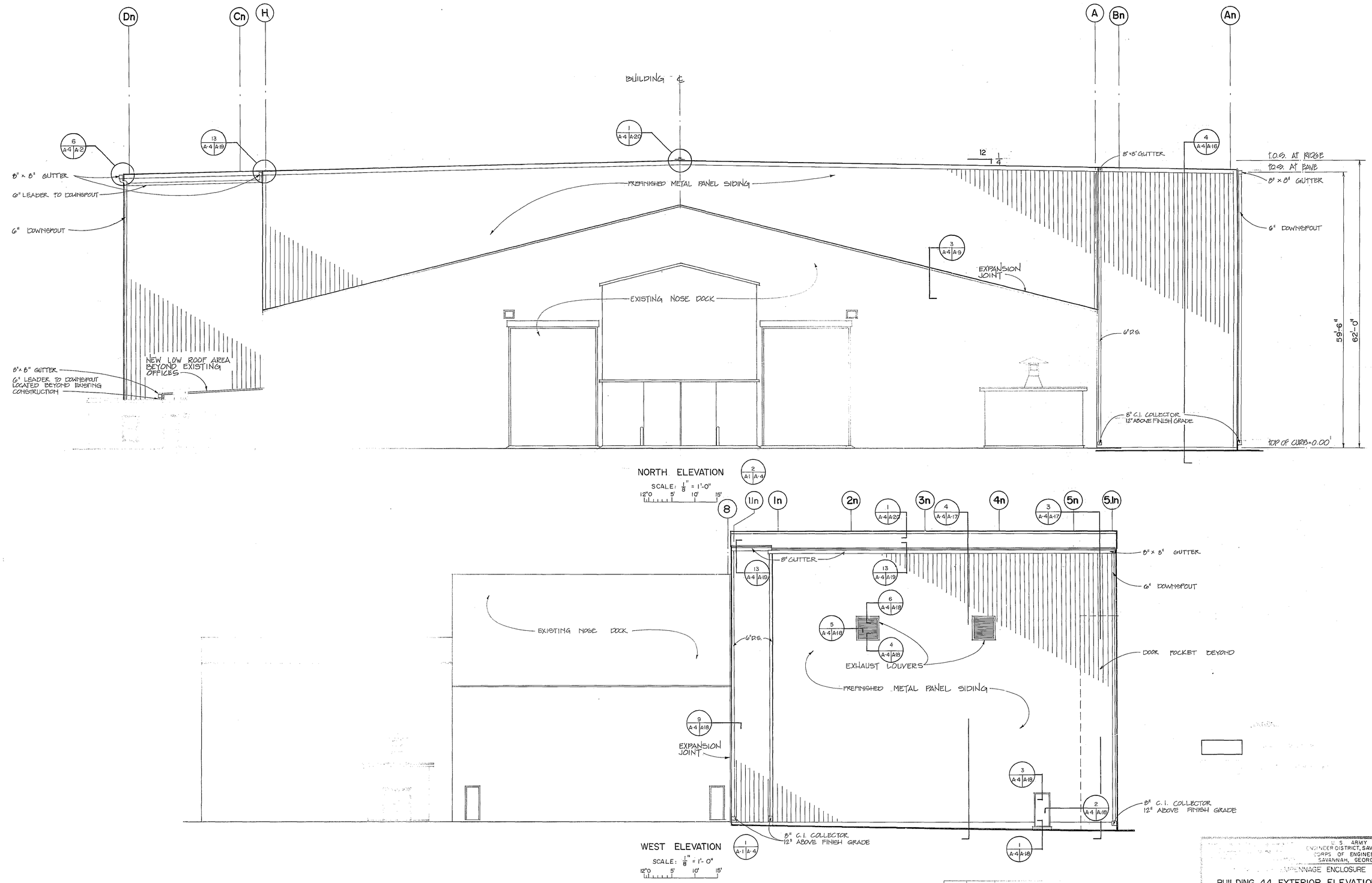

U.S. ARMY
ENGINEER DISTRICT, SAVANNAH
CORPS OF ENGINEERS
SAVANNAH, GEORGIA

EMPENNAGE ENCLOSURE

BUILDING 44 EXTERIOR ELEVATIONS

BASE GEORGIA

39-01-08

PLATE A-4

SHEET 14

14

(RED OVERLAY FOR BASIC R. A-4)

FORMAT 6

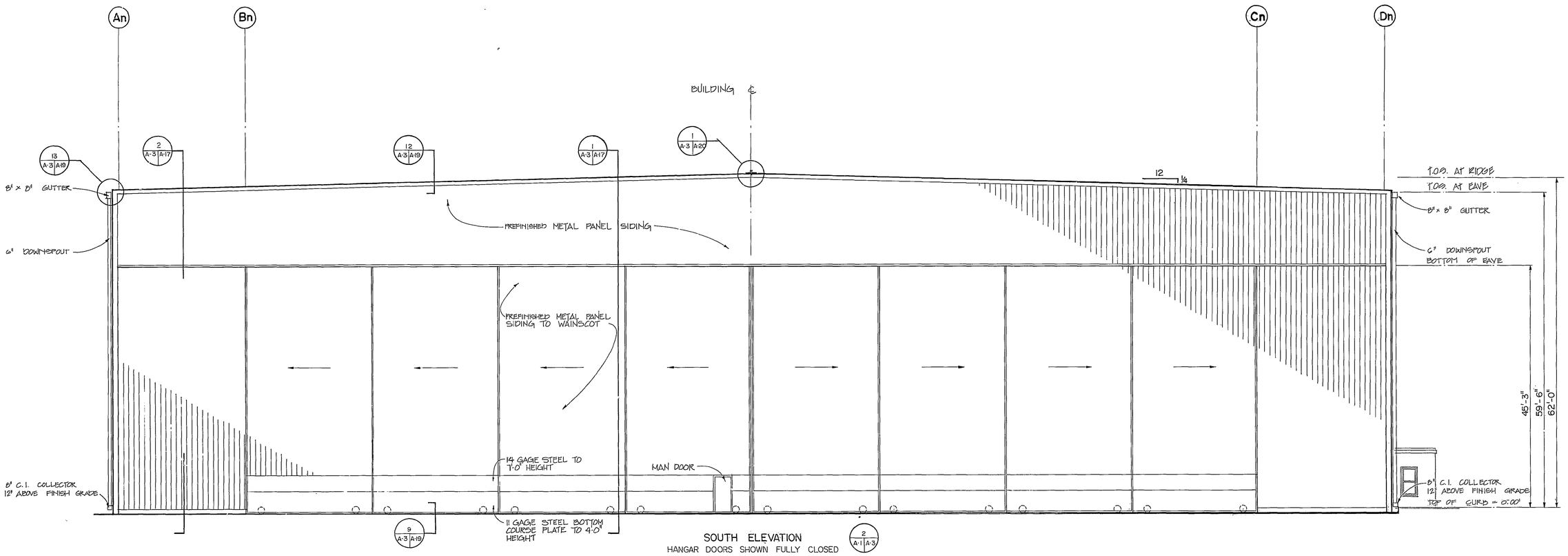

SYMBOL	ZONE	DESCRIPTION

REVISIONS

WURZ, WISECARVER & PRUETT
ARCHITECTS-ENGINEERS
ATLANTA GEORGIA

U. S. ARMY
ENGINEER DISTRICT, SAVANNAH
CORPS OF ENGINEERS
SAVANNAH, GEORGIA

NOSE DOCK EMPENNAGE ENCLOSURE

BUILDING 44 EXTERIOR ELEVATIONS

ROBINS AIR FORCE BASE GEORGIA

SIZE	INVITATION NO.	DRAWING NO.	PLATE
	DACA21-85-B-0090	39-01-08	A-3

SHEET 13

13

(RED OVERLAY FOR BASIC R. A-3)

FORMAT 6

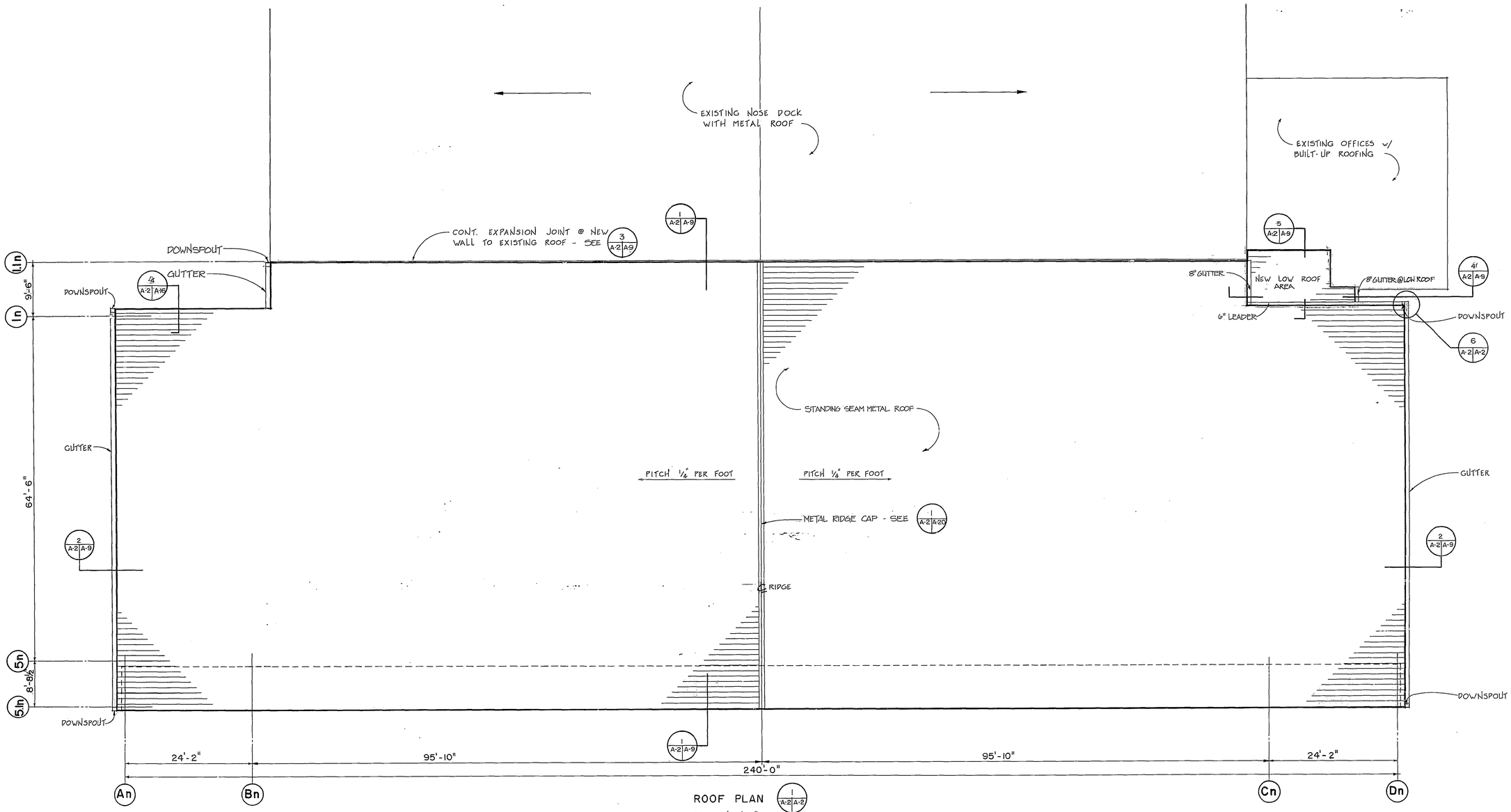

ROOF PLAN 1 A-2 A-2

SCALE 1/8" = 1'-0"

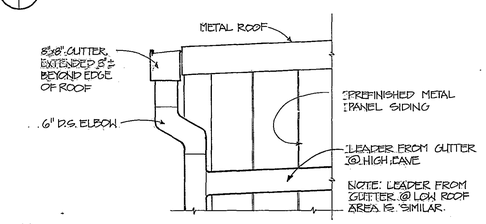

DETAIL-GUTTER & D.S. AT CORNER 6 A-2 A-2

BLDG.44 ONLY

SCALE 3/4" = 1'-0"

ALL WORK SHOWN ON THIS SHEET IS NEW UNLESS OTHERWISE NOTED.

SYMBOL	ZONE	DESCRIPTION	DATE	BY
		REVISIONS		

WURZ, WISECARVER & PRUETT
ARCHITECTS · ENGINEERS
ATLANTA GEORGIA

U. S. ARMY
ENGINEER DISTRICT, SAVANNAH
CORPS OF ENGINEERS
SAVANNAH, GEORGIA

NOSE DOCK EMPENNAGE ENCLOSURE

BUILDING 44 ROOF PLAN

ROBINS AIR FORCE BASE GEORGIA

SIZE	INVITATION NO.	DRAWING NO.	PLATE
F	DACA21-85-B-0090	39-01-08	A-2

SCALE: AS SHOWN SHEET 12

12

FORMAT 6

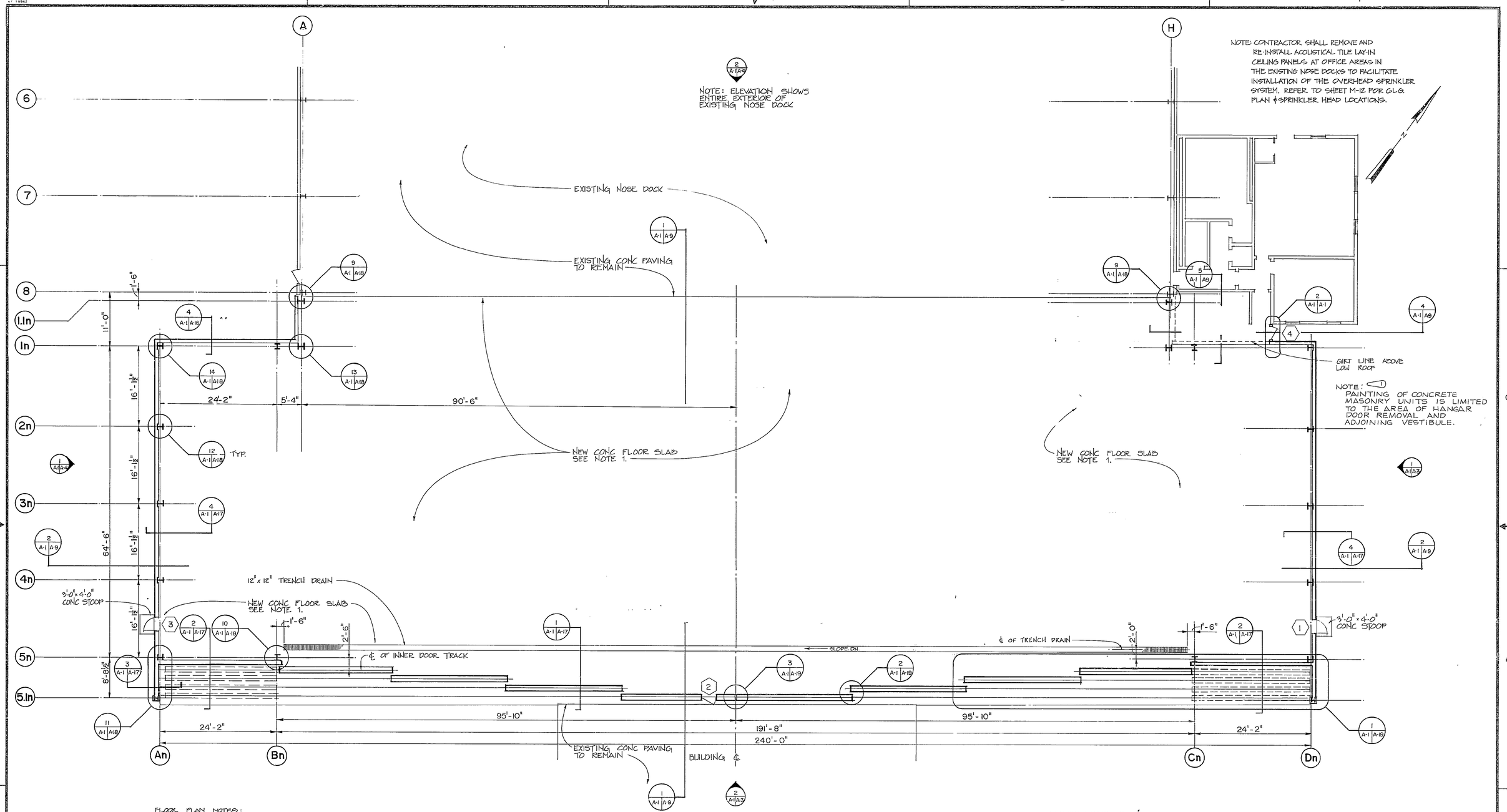

FLOOR PLAN NOTES:

1) EXISTING CONCRETE APRON AND RAMP PAVING TO BE REMOVED TO LIMITS INDICATED AND REPLACED WITH NEW CONCRETE FLOOR SLAB. REFER TO STRUCTURAL DRAWINGS FOR THICKNESSES, REINFORCING, SLOPES, ETC. OF NEW FLOOR SLABS.

2) CONSTRUCTION OF EMPENNAGE ENCLOSURE TO BE SYMMETRICAL ABOUT BUILDING CENTERLINE

PLAN

SCALE: 1/8" = 1'-0"

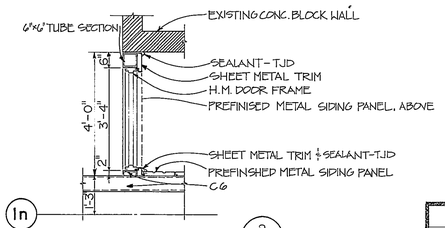

DETAIL-PLAN AT DOOR

LOW ROOF AREA

SCALE 1/2"=1'-0"

LEGEND

NEW STRUCTURE

EXISTING STRUCTURE

STRUCTURE TO BE REMOVED

DOOR SCHEDULE

MARK	TYPE	MAT'L		SIZE			HRDWRE SET	DETAILS			REMS.
		DOOR	FRAME	WIDTH	HEIGHT	THICK.		HEAD	JAMB	SILL	
1	A	H.M.	H.M.	3'-0"	6'-8"	1¾"	2	3/A-18	2/A-18	1/A-18	
2	B	H.M	STL.	3'-0"	6'-8"	1¾"	1	BY HANGER DOOR MFGR.			
3	A	H.M.	H.M.	3'-0"	6'-8"	1¾"	2	3/A-18	2/A-18	1/A-18	
4	A	H.M.	H.M.	3'-0"	6'-8"	1¾"	2	3/A-18	2/A-18	1/A-18	

SYMBOL	ZONE	DESCRIPTION	DATE	BY
1	C-1	REVISED IN ACCORDANCE WITH AMENDMENT NO.0003	5 DEC 84	

REVISIONS

DESIGN	CHECK
W.R.P	J.A.W.

WURZ, WISECARVER & PRUETT ARCHITECTS-ENGINEERS ATLANTA GEORGIA

U. S. ARMY ENGINEER DISTRICT, SAVANNAH CORPS OF ENGINEERS SAVANNAH, GEORGIA

PREPARED BY

PRINCIPAL OF FIRM

REVIEWED

PROJECT MANAGER

RECOMMENDED

CHIEF, MIL PROGRAM & MGMT BRANCH

DATE: 01 SEPT 83

NOSE DOCK EMPENNAGE ENCLOSURE

BUILDING 44 FLOOR PLAN

ROBINS AIR FORCE BASE GEORGIA

SIZE	INVITATION NO	DRAWING NO	PLATE
F	DACA21-85-B-0090	39-01-08	A-1

SCALE: AS SHOWN SHEET 11

(BASIC SHEET A-1) (RED OVERLAY FOR BASIC & A-1)

AF 24369C

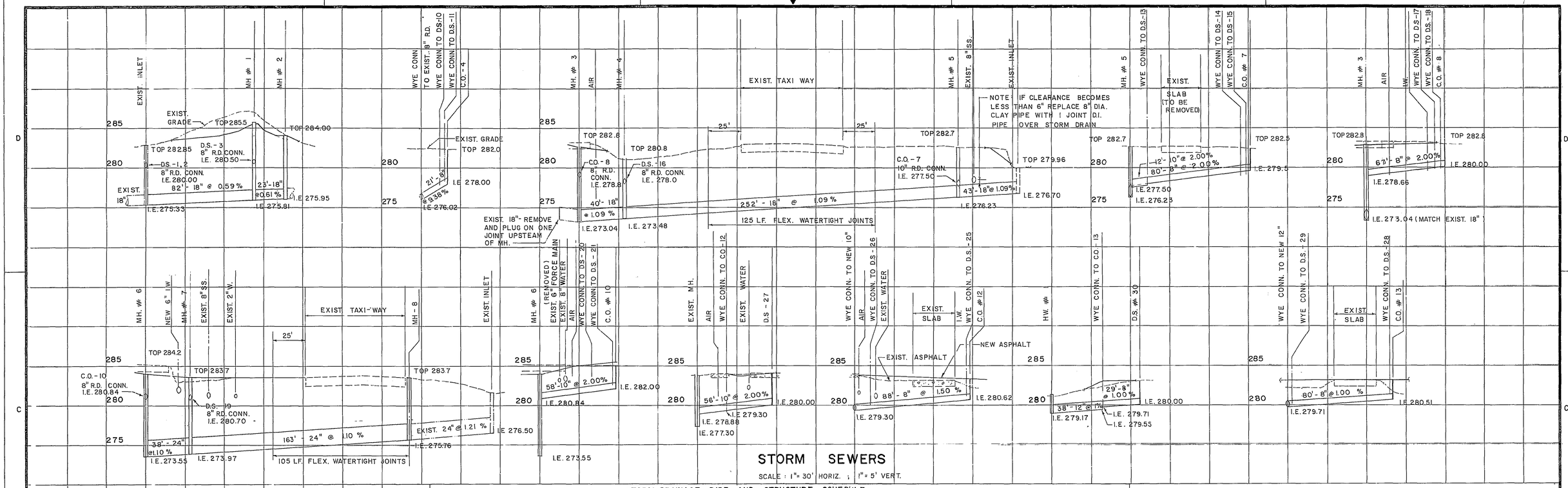

STORM DRAINAGE PIPE AND STRUCTURE SCHEDULE

STRUCTURE. FROM	TO	HORIZ. DISTANCE BETWEEN STRUCT. (IN FT.)	CONC., CLAY OR TYPE "E" C.M. PIPE: DIA. (INCHES)	SLOPE %	INVERT ELEV. DOWN-STREAM	INVERT ELEV. UP-STREAM	PIPE CLASS	GAGE C.M.	TYPE "A" C.M. PIPE: DIA. INCHES	SLOPE %	INVERT ELEV. DOWN-STREAM	INVERT ELEV. UP-STREAM	GAGE C.M.	STRUCTURE NO.	TYPE OF STRUCTURE	DEPTH OF STR. (IN FEET)	TOP OF M.H. OR INLET	TYPE GRATE	NO. OF GRATES	REMARKS
EXIST	MH-1	82	18	0.59	275.33	275.81	III	16	24	0.59	275.33	275.81	16		EXISTING	7.5	282.8			GRATE INLET
MH-1	MH-2	23	18	0.61	275.81	275.95	III	16	24	0.61	275.81	275.95	16	MH-1	TYPE "A"	10.2	286.0			M.H. FRAME & COVER
														MH-2	TYPE "A"	8.0	284.0			
EXIST.	C.O-4	21	8	9.38	276.02	278.00	EX. STR.	16	8	9.38	276.02	278.00	16	C.O-4	CLEANOUT	4.0	282.0			
MH-3	MH-4	40	18	1.09	273.04	273.48	III	16	24	1.09	273.04	273.48	16	MH-3	TYPE "A"	9.8	282.8			MH FRAME & COVER
MH-4	MH-5	252	18	1.09	273.48	276.23	III		24	1.09	273.48	276.23	16	MH-4	TYPE "A"	7.3	280.8			MH FRAME & COVER
ACROSS TAXIWAY		125	18	1.09			IV							MH-5	TYPE "A"	6.5	282.7			MH FRAME & COVER
MH-5	EXIST.	43	18	1.09	276.23	276.70	III	16	24	1.09	276.23	276.70	16							
MH-5	WYE	12	10	2.00	277.50	277.74	EX. STR.	16	10	2.00	277.50	277.74	16	WYE						
WYE	C.O-7	80	8	2.00	277.90	279.50	EX. STR.	16	10	2.00	277.90	279.34	16	CO-7	CLEANOUT	3.0	282.5			
MH-3	C.O-8	67	8	2.00	278.66	280.00	EX. STR.	16	10	2.00	278.50	279.84	16	C.O-8	CLEANOUT	2.8	282.8			
MH-6	MH-7	38	24	1.10	273.55	273.97	III	16	30	0.85	273.55	273.87	16	MH-6	TYPE "A"	10.7	284.2			MH FRAME & COVER
MH-7	MH-8	163	24	1.10	273.97	275.76	III	16	30	0.85	273.47	275.26	16	MH-7	TYPE "A"	9.7	283.7			MH FRAME & COVER
ACROSS TAXIWAY		105	24	1.10			IV							MH-8	TYPE "A"	7.9	283.7			MH FRAME & COVER
MH-6	C.O-10	58	10	2.00	280.84	282.00	EX. STR.	16	10	2.00	280.68	281.84	16	C.O-10	CLEANOUT	3.5	285.5			
EXIST.	DS-27	56	10	2.00	278.88	279.30	EX. STR.	16	10	2.00	278.72	279.14	16	DS-27	DOWNSPOUT	4				
WYE	CO-12	88	8	1.50	279.30	280.62	EX. STR.	16	10	1.32	279.30	280.46	16	CO-12	CLEANOUT	2.9	283.5			
HW-1	WYE	38	12	1.00	279.17	279.55	EX. STR.	16	12	1.00	279.17	279.55	16	HW-1	HEADWALL					STRAIGHT HEADWALL
WYE	DS-30	29	8	1.00	219.71	280.00	EX. STR.	16	8	1.00	279.71	280.00	16	DS-30	DOWNSPOUT	3				
WYE	CO-13	80	8	1.00	279.71	280.51	EX. STR.	16	10	1.00	279.71	280.51	16	CO-13	CLEANOUT	2	282.5			

NOTES:

1. PIPE LENGTHS SHOWN ON PLANS OR IN TABLES ARE SCALED DISTANCES. ACTUAL LENGTHS OF PIPE NEEDED SHALL BE DETERMINED IN THE FIELD.
2. CLAY, OR NON-REINFORCED CONCRETE PIPE MUST MEET STRENGTH REQUIREMENTS FOR SAME SIZE OF REINFORCED CONCRETE PIPE.
3. PIPE-CLASS IS BASED ON A D-LOAD, AS APPLIED TO REINFORCED CONCRETE PIPE AND IS THE TEST LOAD IN POUNDS PER LINEAR FOOT PER FOOT OF DIAMETER TO PRODUCE ULTIMATE FAILURE.
4. THE TOP ELEVATION OF MANHOLES, INLETS AND GRATES MAY BE ADJUSTED AS APPROVED BY THE CONTRACTING OFFICER TO COINCIDE WITH FINAL FINISHED GRADES.
5. 8" DIA. EXTRA STRENGTH CONCRETE, CLAY OR 16 GA. C.M. PIPE SHALL BE USED FOR ROOF DRAIN DOWNSPOUT COLLECTORS.
6. STORM DRAINAGE PIPE MATERIAL SHALL BE REINFORCED CONCRETE OR CORRUGATED METAL OF THE CLASSES AND STRENGTHS SHOWN.

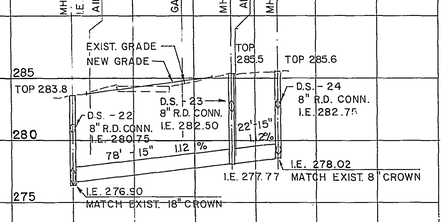

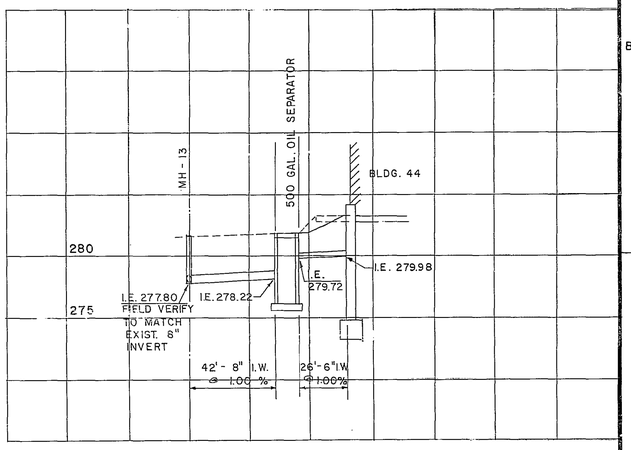

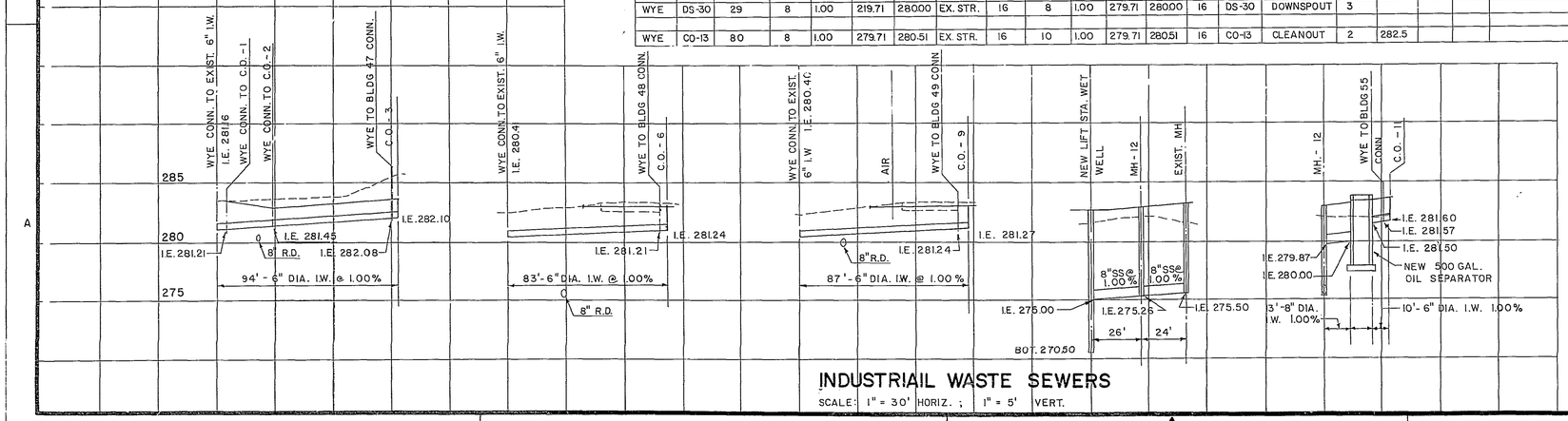

INDUSTRIAIL WASTE SEWERS
SCALE: 1" = 30' HORIZ. ; 1" = 5' VERT.

GRAPHIC SCALES
1" = 5' 5' 0' 5' 10'
1" = 30' 30' 0' 30' 60'

SYMBOL	ZONE	DESCRIPTION	DATE	BY
		REVISIONS		

WURZ, WISECARVER & PRUETT ARCHITECTS · ENGINEERS ATLANTA GEORGIA.

U. S. ARMY ENGINEER DISTRICT, SAVANNAH CORPS OF ENGINEERS SAVANNAH, GEORGIA

NOSE DOCK EMPENNAGE ENCLOSURE

SEWER PROFILES

ROBINS AIR FORCE BASE GEORGIA

SIZE	INVITATION NO.	DRAWING NO.	PLATE
F	DACA 21-85-B-0090	39 - 01 - 08	P - 7

SCALE. AS SHOWN SHEET 10

10

FORMAT 6

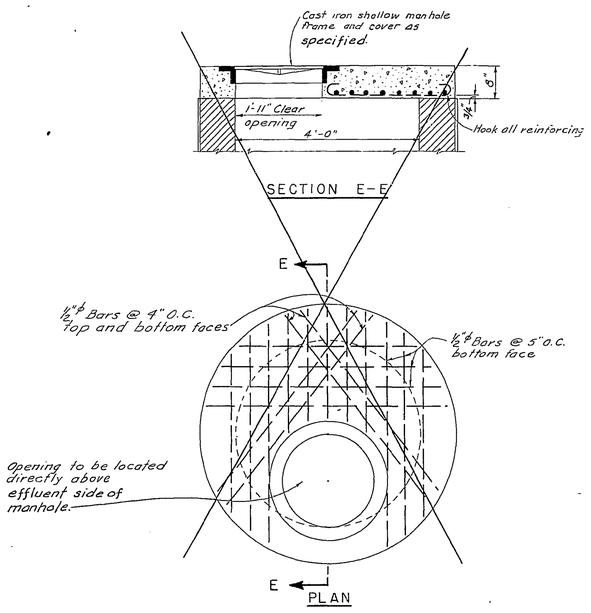

SHALLOW MANHOLE TOP SLAB

SCALE: 3/4 INCH = 1 FOOT

Notes:
1. Walls may be of other material than brick if and as included in the contract specifications.
2. Cast Iron Covers & Frames design is based on a wheel load of 16,000 lbs. plus 25% allowance for impact & the use of class 20 Cast Iron (Fed. Spec. QQ-I-652) other designs differing only in non-essential details & as approved by the Contracting Officer may be used. Weight shall not be less than 400 lbs.
3. A Reverse Wye Branch may be used in the drop connection in lieu of the std. shown in the Typical Section with Drop Connections.
4. Use 3/4" ϕ or 5/8" □ W.I. or Steel Rungs or Cast Iron Steps of approved design. Rungs or steps will not be required on manholes less than 12' deep.
5. When depth of manhole is less than 6'-0" the manhole shall be constructed with straight sides with inside diameter of 4'-0" and with shallow manhole top as shown in Section E-E.
6. Cover Frames shall be securely installed in a bed of cement mortar.
7. Pipe and pipe fittings for drop manhole connections shall be vitrified clay or concrete conforming to the requirements of the sewer specifications.
8. Walls to be 8" thick to 13 foot depth, walls to be increased to 12" thickness in sections below 13 foot depth.

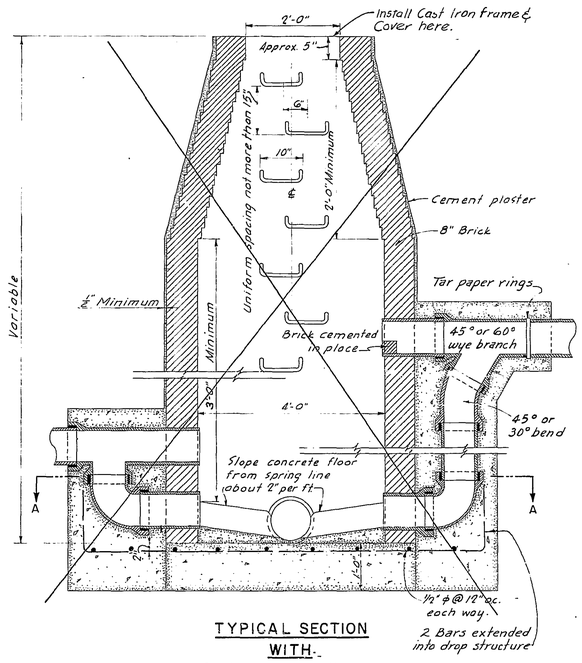

TYPICAL SECTION WITH DROP CONNECTIONS

SCALE: 3/4" = 1'-0"

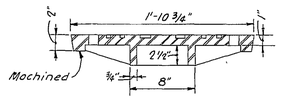

SECTION D-D

SCALE: 1 1/2" = 1'-0"

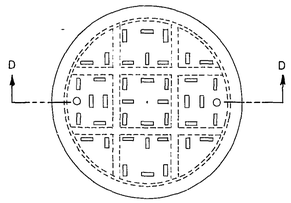

PLAN OF COVER

SCALE: 1 1/2" = 1'-0"

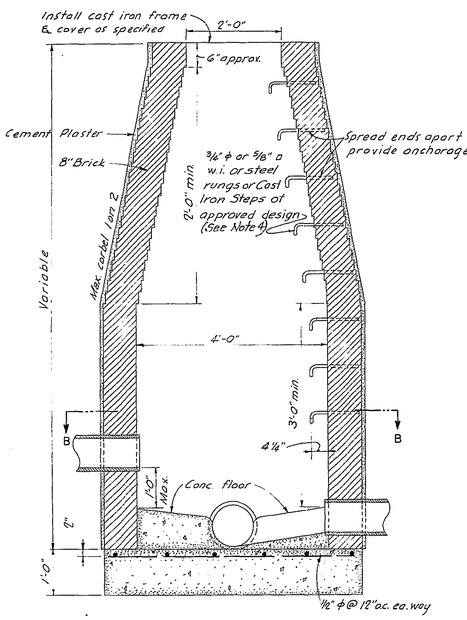

TYPICAL SECTION WITH USUAL CONNECTIONS

SCALE: 3/4" = 1'-0"

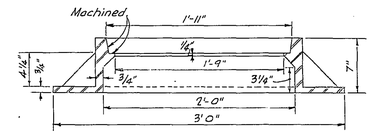

SECTION C-C

SCALE: 1 1/2" = 1'-0"

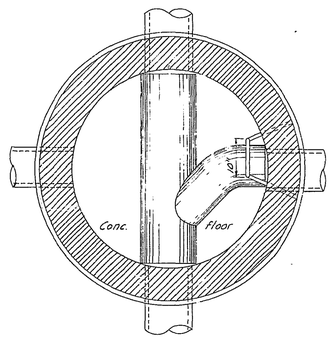

HORIZONTAL SECTION B-B

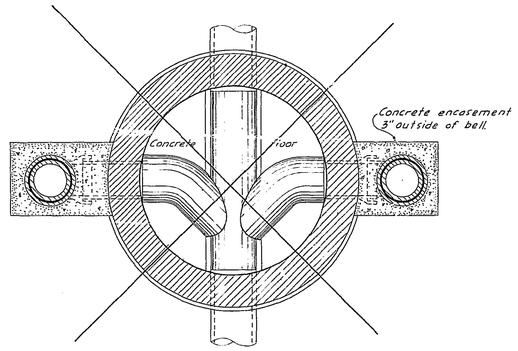

HORIZONTAL SECTION A-A

SCALE: 3/4" = 1'-0"

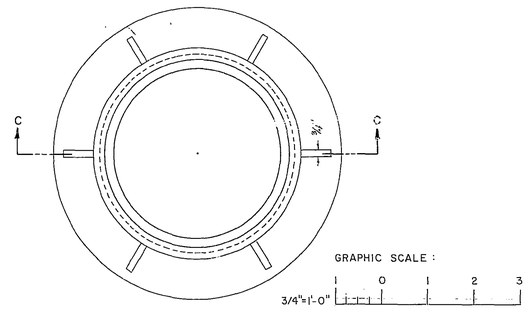

PLAN OF FRAME

SCALE: 1 1/2" = 1'-0"

GRAPHIC SCALE :
3/4"=1'-0" 0 1 2 3
1 1/2"=1'-0" 0

SANITARY SEWER MANHOLE DETAILS

SYMBOL	ZONE	DESCRIPTION REVISIONS	DATE	BY
1		ADAPTED BY HARTRAMPF/POWELL INC. AND ISSUED BY SAVANNAH DISTRICT FOR ROBINS AFB UNDER INVITATION NO. DACA-21-84-B-0019		

WURZ, WISECARVER & PRUETT ARCHITECTS · ENGINEERS ATLANTA GEORGIA

U.S. ARMY ENGINEER DISTRICT SAVANNAH CORPS OF ENGINEERS SAVANNAH, GEORGIA

NOSE DOCK EMPENNAGE ENCLOSURE

SITE DETAILS

ROBINS AIR FORCE BASE GEORGIA

SIZE	INVITATION NO.	FILE NO.	PLATE
F	DACA 21-85-B-0090	39 - 01 - 08	P-5

SCALE AS SHOWN SHEET 8

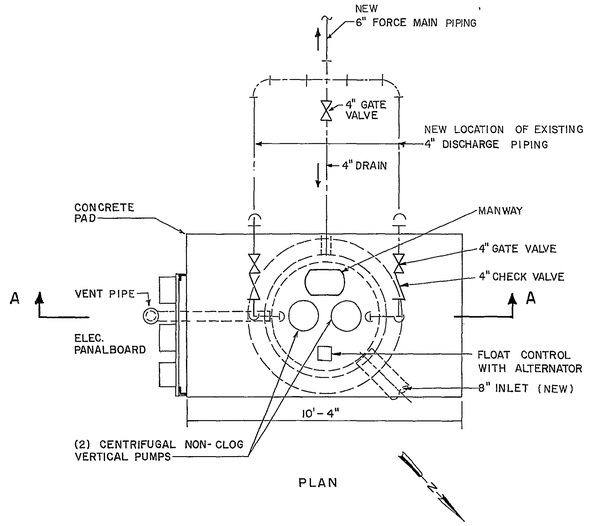

PLAN

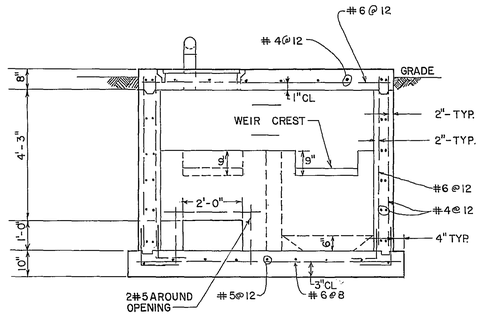

SECTION B-B

SCALE : 1/2" = 1'-0"

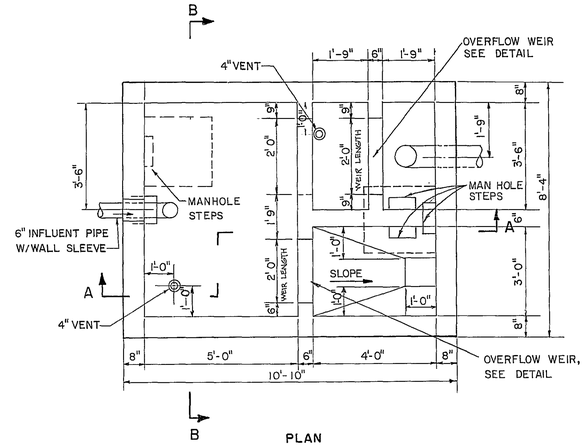

PLAN

SCALE : 1/2" = 1'-0"

NOTE:
WEIRS TOP SHALL BE LEVELED BEFORE TIGHTNING BOLTS

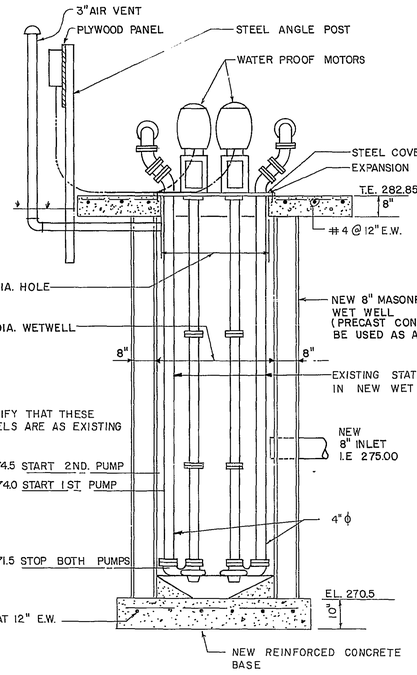

SECTION A-A

SEWAGE LIFT STATION (1 / P-3 | P-2)

SCALE: 1/2"= 1'-0"

NOTE:
LIFT STATION DETAILS REFLECT THE EXISTING LIFT STATION EQUIPMENT INSTALLED IN A NEW LOCATION ON A NEW WET WELL.

REFER TO PLATE P-2 FOR EXACT LOCATION OF LIFT STATION AND TO PROCEDURES ON THIS PLATE FOR RELOCATION INSTRUCTIONS.

ALL EXISTING EQUIPMENT (IE PUMPS, MOTORS, CONTROLS, AND STATION PIPING) SHALL BE REMOVED FROM THE EXISTING LOCATION AND INSTALLED IN THE NEW LOCATION IN SAME CONDITION

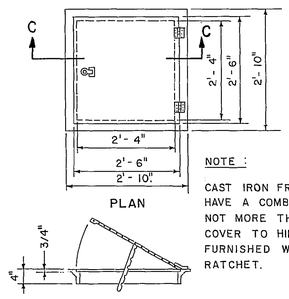

PLAN

SECTION C-C

NOTE :

CAST IRON FRAME & COVER TO HAVE A COMBINED WEIGHT OF NOT MORE THAN 250 LBS. COVER TO HINGED TYPE AND FURNISHED W/ADJUSTABLE RATCHET.

DETAIL - MANHOLE FRAME & COVER

SCALE : 3/4" = 1'-0"

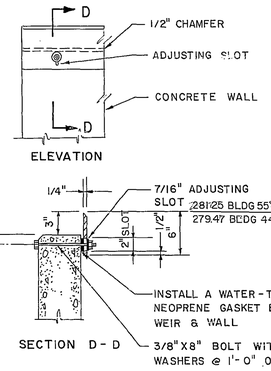

SECTION D-D

DETAIL - OVERFLOW WEIR INSTALLATION

SCALE : 1/2" = 1'-0"

DETAIL TYPICAL FOR BOTH WEIRS

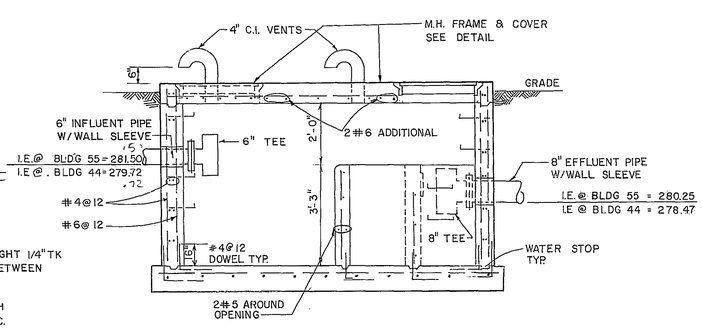

SECTION A-A

SCALE: 1/2"=1'-0"

CONSTRUCTION OF OIL SEPARATOR FOR BLDG. 55 AND BLDG 44 IS IDENTICAL EXCEPT FOR MINOR DIFFERENCES IN ELEVATION

PROCEDURE FOR RELOCATION OF EXSTING LIFT STATION

THESE NOTES DESCRIBE GENERALLY THE PROCESS FOR REMOVAL AND RELOCATION OF EXISTING LIFT STATION PRIOR TO THIS WORK, THE CONTRACTOR SHALL SUBMITT A DETAILED SCHEDULE OR PLAN TO THE CONTRACTING OFFICER FOR APPROVAL.

MECHANICAL

1. CONSTRUCT NEW WET WELL, FORCE MAIN GRAVITY SEWER LINE AND MANHOLES ROUGH GRADE NEW LIFT STATION SITE.
2. PROVIDE TEMPORARY PUMPS, CAPABLE OF MEETING THE PRESENT HEAD-CAPACITY REQUIREMENTS. CONNECT PUMP DISCHARGE TEMPORARILY TO EXISTING FORCE MAIN. PROVIDE TEMPORARY POWER FOR PUMPS.
3. REMOVE EXISTING PUMPS, CONTROLS, AND STATION PIPING, AND INSTALL AT NEW WET WELL.
4. MAKE ALL NECESSARY PIPE CONNECTIONS TO ACTIVATE NEW STATION.
5. START UP PUMPS AT NEW STATION.
6. REMOVE TEMPORARY PUMPS AND DEMOLISH EXISTING WET WELL.
7. COMPLETE FINISH GRADING AFTER CONSTRUCTION OF OIL SEPARATOR AND INSTALL SECURITY FENCE.

ELECTRICAL

1. PROVIDE TEMPORARY POWER FOR TEMPORARY PUMPS.
2. THE CONTRACTOR SHALL RELOCATE THE NORMAL AND EMERGENCY POWER BACKBOARDS TO THE NEW LIFT STATION LOCATION. THE BACKBOARDS SHALL BE ORIENTATED SO ALL CONNECTIONS TO EQUIPMENT CAN BE REUSED.
3. PROVIDE A NEW 4-#2 THW CU. CONDUCTOR IN 1 1/2" R.S. CONDUIT INSTALLED UNDER GRADE FROM EXISTING MAIN SERVICE JUNCTION BOX TO THE NEW ELECTRICAL PANEL'S LOCATION.
4. PROVIDE A NEW 4-#8 THW CU. CONDUCTOR IN 1" R.S. CONDUIT INSTALLED UNDER GRADE FROM THE EXISTING SAFETY SWITCH MOUNTED ON THE POLE TO THE NEW ELECTRICAL PANEL'S LOCATION.
5. AFTER ALL ELECTRICAL EQUIPMENT IS RELOCATED THE CONTRACTOR SHALL RECONNECT ALL EQUIPMENT AS BEFORE.

TESTING

1. PROVIDE TEST NECESSARY TO INSURE THAT REINSTALLED PUMPS MATCH EXISTING PREFORMANCE REQUIREMENTS AND THAT ALL EQUIPMENT, CONTROLS, VALVES, ETC ARE OPERATING PROPERLY.

NOTE:
ALL WORK ON THIS SHEET IS NEW WORK

OIL SEPARATOR (1 / P-3 | P-2)

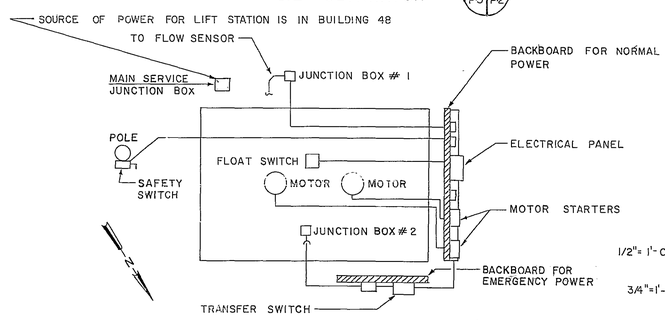

GRAPHIC SCALE :

1/2"= 1'-0" 1 0 1 2 3 4 5

3/4"=1'-0" 1 0 1 2 3

LIFT STATION ELECTRICAL RELOCATION PLAN

NO SCALE

NOTE : THIS PLAN DEPICTS THE LIFT STATION EQUIPMENT AS IT EXIST BEFORE RELOCATION.

SYMBOL	ZONE	DESCRIPTION	DATE	BY
		REVISIONS		

WURZ, WISECARVER & PRUETT ARCHITECTS · ENGINEERS ATLANTA GEORGIA

U. S. ARMY ENGINEER DISTRICT, SAVANNAH CORPS OF ENGINEERS SAVANNAH, GEORGIA

NOSE DOCK EMPENNAGE ENCLOSURE

SITE DETAILS

ROBINS AIR FORCE BASE GEORGIA

SIZE	INVITATION NO.	DRAWING NO.	PLATE
F	DACA-21-85-B-0090	39 - 01 - 08	P-3

SCALE AS SHOWN SHEET 6

6

FORMAT 6

ELECTRICAL NOTES

1. 12.47 KV PRIM. Δ, 480Y /277 V. SECONDARY 500 KVA MINERAL OIL TRANSFORMER SHALL HAVE THE FOLLOWING EQUIPMENT: LOAD BREAK PRIMARY VOLTAGE SWITCH, EXTERNAL TAP CHANGERS, PULSE INITIATING KILOWATT HOUR DEMAND METER COMPATABLE WITH THE EXISTING EMCS (ENERGY MANAGEMENT CONTROL SYSTEM), POWER AND CURRENT TRANSFORMERS AS REQUIRED BY NECESSARY METERS, LIGHTNING ARRESTORS ON TRANSFORMER PRIMARY, SECONDARY PROTECTION, AND OTHER ITEMS COVERED IN SPECIFICATIONS
2. PROVIDE DISTRIBUTION SURGE ARRESTORS AND MOUNTING HARDWARE ON POLE.
3. PROVIDE 100 AMP., 15 KV DROP LINK FUSED CUTOUTS AND MOUNTING HARDWARE ON POLE. FUSE AT 32 AMPS.
4. SEE PLATE E-22 FOR POLE DETAILS
5. PROVIDE A POTHEAD AT THE END OF THE UNDERGROUND CONDUIT LOCATED HIGH ON THE POLE. POTHEAD SHALL BE MOUNTED AS CLOSE TO THE AERIAL TO TERMINATOR AS POSSIBLE.
6. SEE PLATE E-4 FOR ELECTRICAL DETAILS

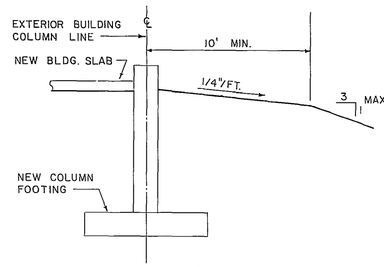

SECTION (1 / P-1 | P-2)
NOT TO SCALE

TYPICAL ALL ENCLOSURES

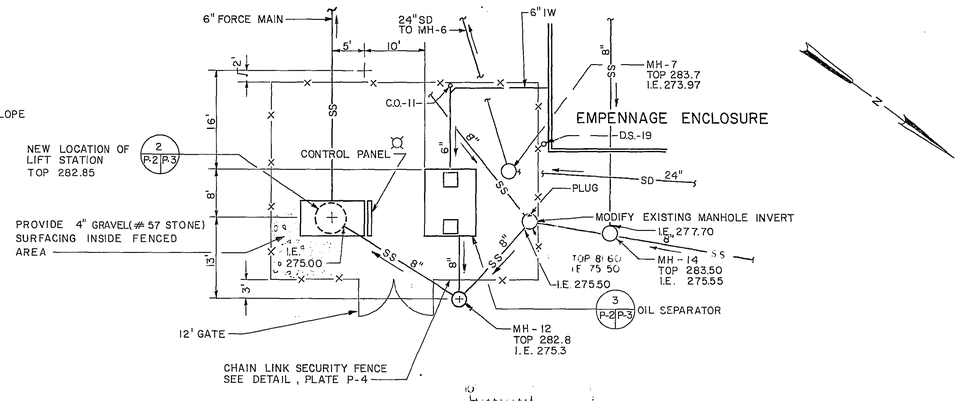

DETAIL (1 / P-2 | P-2)
SCALE: 1" = 10'-0"

GENERAL NOTES

1. REFER TO PLATE P-1 FOR LEGEND AND GENERAL NOTES.
2. SEE APPENDIX A OF SPECIFICATIONS FOR COMPLETE LOGS OF BORINGS
3. RELOCATE EXISTING LIFT STATION PUMPS AS SHOWN. SEE PLATE P-3 FOR SPECIFIC INSTRUCTIONS.

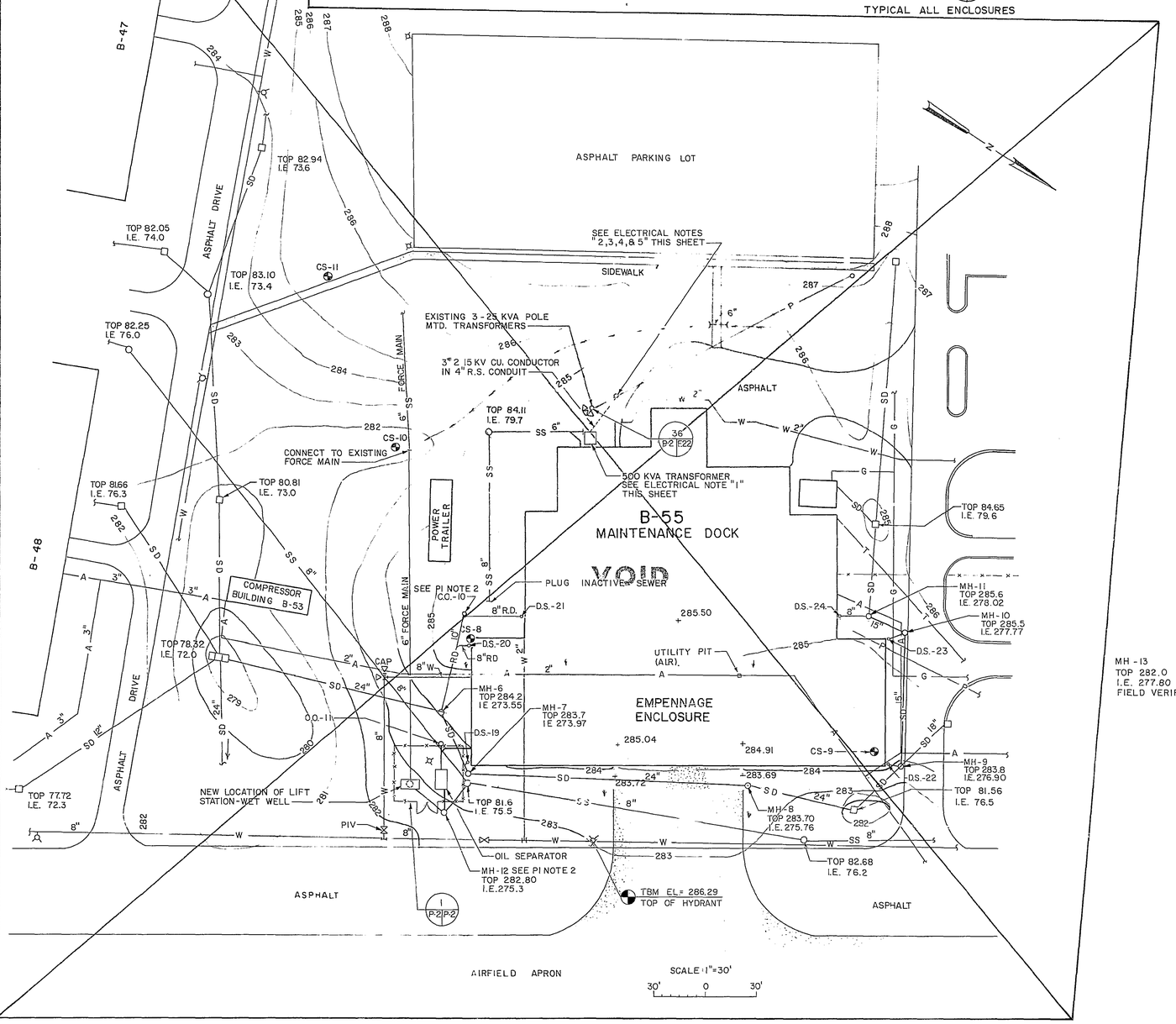

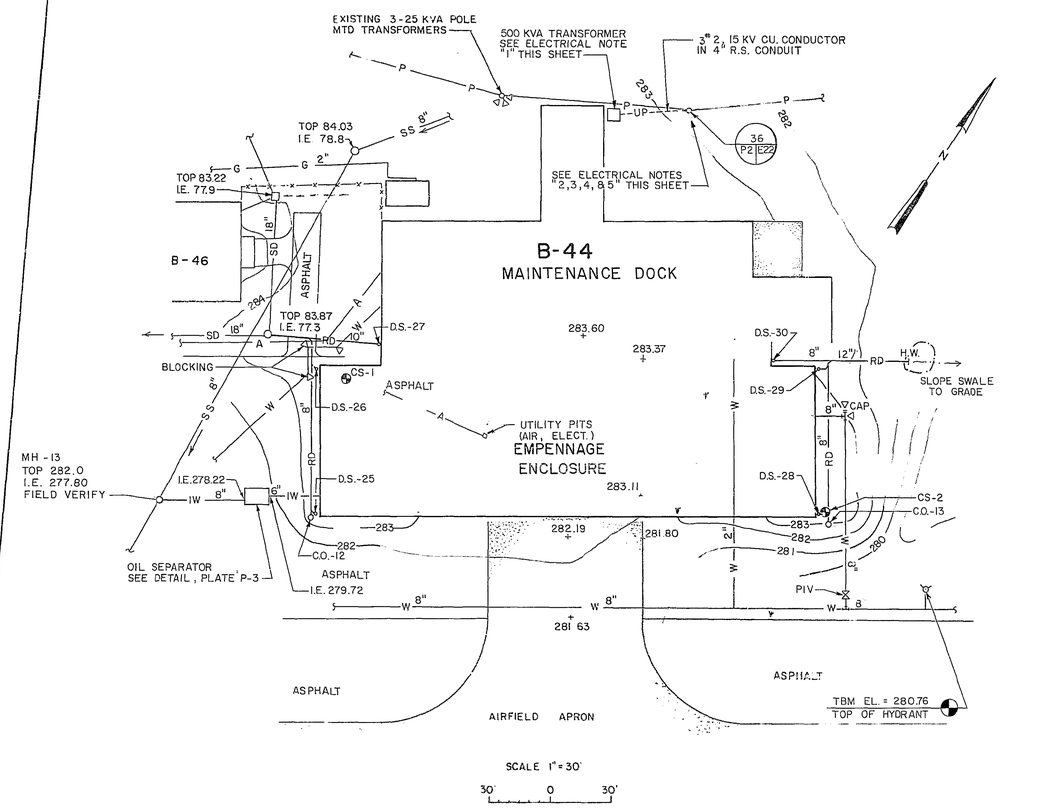

SYMBOL	ZONE	DESCRIPTION	DATE	BY
REVISIONS				

WURZ, WISECARVER & PRUETT ARCHITECTS ENGINEERS ATLANTA GEORGIA

U. S. ARMY ENGINEER DISTRICT, SAVANNAH CORPS OF ENGINEERS SAVANNAH, GEORGIA

NOSE DOCK EMPENNAGE ENCLOSURE
SITE PREPARATION PLAN
BUILDING 44
ROBINS AIR FORCE BASE GEORGIA

SIZE	INVITATION NO.	DRAWING NO	PLATE
F	DACA 21-85-B 0090	39 - 01 - 08	P-2
SCALE AS SHOWN		SHEET 5	

BASIC SHEET (RED OVERLAY FOR BASIC R. P-2)

FORMAT E