US Army Corps
of Engineers
Savannah District

Robins AFB
Georgia

Solicitation Number
DACA21-03-R-0025
Corrosion Control De-paint (FY03, UHHZ003014) and Paint (FY04, UHHZ003011) Facilities
Volume I of III - Proposal Requirements, Contract Forms, and Conditions of the Contract
May 2003

PHASE TWO OF TWO PHASE DESIGN/BUILD SUBMITTAL PROCEDURE

THIS SOLICITATION IS UNRESTRICTED PURSUANT TO THE "BUSINESS OPPORTUNITY DEVELOPMENT REFORM ACT OF 1988" (PUBLIC LAW 100-656)

U.S. ARMY ENGINEER DISTRICT, SAVANNAH
CORPS OF ENGINEERS
100 WEST OGLETHORPE AVENUE
SAVANNAH, GEORGIA 31401-3640

PROJECT TABLE OF CONTENTS

SECTION NUMBER	TITLE

VOLUME 1

PROPOSAL REQUIREMENTS, CONTRACT FORMS, AND CONDITIONS OF THE CONTRACT

00010	SOLICITATION, OFFER, & AWARD (SF 1442) AND BIDDING SCHEDULE
00100	INSTRUCTIONS, CONDITIONS & NOTICES TO OFFERORS
00600	REPRESENTATIONS AND CERTIFICATIONS
00700	CONTRACT CLAUSES
00800	SPECIAL CONTRACT REQUIREMENTS
	ATTACHMENT 1

DIVISION 01 - GENERAL REQUIREMENTS

01010	GENERAL PROJECT DESCRIPTION AND DESIGN REQUIREMENTS
01012	DESIGN AFTER AWARD (DESIGN/BUILD)
01013	DEPAINT FACILITY TECHNICAL DESIGN CRITERIA
01014	PAINT FACILITY TECHNICAL DESIGN CRITERIA
01312A	QUALITY CONTROL SYSTEM (QCS)
01320A	PROJECT SCHEDULE
~~01322~~	~~CONTRACTOR PREPARED NETWORK ANALYSIS SYSTEM (NAS)~~
01330/S	SUBMITTAL PROCEDURES (DESIGN/BUILD)
01355A	ENVIRONMENTAL PROTECTION
01415	METRIC MEASUREMENTS
01420	SOURCES FOR REFERENCE PUBLICATIONS
01451A	CONTRACTOR QUALITY CONTROL
01500	TEMPORARY CONSTRUCTION FACILITIES
01780	AS-BUILT DRAWINGS SUBMITTALS
01781n	OPERATION AND MAINTENANCE DATA

VOLUME 2

Appendix A	References
Appendix B	New Site Drawings
Appendix C	Functional Room Requirements, a room-by-room summary of specific user requirements for functions within the new facility
Appendix D	Geotechnical ~~Report~~Information
Appendix E	As-built Drawings for Building 44
Appendix F	Proposed Schematic New Work Floor Plan - Building 44
Appendix G	Specific Base Wide Technical Specifications
Appendix H	Process Material Safety Data Sheets

VOLUME 3

Appendix I Environmental and Abatement Information

Appendix J Existing Information on Buildings 51, 53, 55, and 56

Appendix K Existing Photos of Building 60

Appendix L Base Architectural Compatibility Standard

Appendix M Base Facility Standard

Appendix N Interior Design Presentation Format

Appendix O Example Permits

Appendix P Integrated Natural Resources Management Plan – Robins AFB, Georgia

Appendix Q Process Flow Diagrams

Appendix R Robins AFB Weather Data

Appendix S Existing Compressed Air Plant Information

Appendix T Existing Storm Sewer Drawings

SOLICITATION, OFFER, AND AWARD *(Construction, Alteration, or Repair)*	1. SOLICITATION NO. DACA21-03-R-0025-0008	2. TYPE OF SOLICITATION [ ] SEALED BID (IFB) [X] NEGOTIATED *(RFP)*	3. DATE ISSUED 03-Mar-2003	PAGE OF PAGES 1 OF 216

IMPORTANT - The "offer" section on the reverse must be fully completed by offeror.

4. CONTRACT NO.	5. REQUISITION/PURCHASE REQUEST NO.	6. PROJECT NO.

7. ISSUED BY CODE DACA21	8. ADDRESS OFFER TO *(If Other Than Item 7)* CODE
US ARMY ENGINEER DISTRICT SAVANNAH 100 W OGLETHORPE AVE SAVANNAH GA 31401-3640 TEL: FAX:	**See Item 7** TEL: FAX:

9. FOR INFORMATION CALL:	A. NAME	B. TELEPHONE NO. *(Include area code)* *(NO COLLECT CALLS)*
	ELLIOTT WILLIAMSON III	(912)652-5709

SOLICITATION

NOTE: In sealed bid solicitations "offer" and "offeror" mean "bid" and "bidder".

10. THE GOVERNMENT REQUIRES PERFORMANCE OF THE WORK DESCRIBED IN THESE DOCUMENTS *(Title, identifying no., date):*

PROJECT: CORROSION CONTROL DE-PAINT, FY03, L.I. UHHZ003014 AND PAINT, FY 04, L.I. UHHZ0030011 FACILITIES

POC: elliott.williamson@sas02.usace.army.mil
Phone: 912 652-5709

Contracting Officer: Colleen O'Keefe
email: colleen.okeefe@sas02.usace.army.mil
Phone: 912-652-5075

* Section 00800, 52.211-10 Commencement, Prosecution, and Completion of Work

11. The Contractor shall begin performance within 10 calendar days and complete it within _____ calendar days after receiving [ ] award, [X] notice to proceed. This performance period is [ ] mandatory, [X] negotiable. *(See* 52.211-10 *.)*

12 A. THE CONTRACTOR MUST FURNISH ANY REQUIRED PERFORMANCE AND PAYMENT BONDS? *(If "YES," indicate within how many calendar days after award in Item 12B.)* [X] YES [ ] NO	12B. CALENDAR DAYS

13. ADDITIONAL SOLICITATION REQUIREMENTS:

A. Sealed offers in original and 5 copies to perform the work required are due at the place specified in Item 8 by 05:00 PM *(hour)* local time 11 Sep 2003 *(date).* If this is a sealed bid solicitation, offers must be publicly opened at that time. Sealed envelopes containing offers shall be marked to show the offeror's name and address, the solicitation number, and the date and time offers are due.

B. An offer guarantee [X] is, [ ] is not required.

C. All offers are subject to the (1) work requirements, and (2) other provisions and clauses incorporated in the solicitation in full text or by reference.

D. Offers providing less than 120 calendar days for Government acceptance after the date offers are due will not be considered and will be rejected.

SOLICITATION, OFFER, AND AWARD (Continued)

(Construction, Alteration, or Repair)

OFFER ***(Must be fully completed by offeror)***

14. NAME AND ADDRESS OF OFFEROR *(Include ZIP Code)*	15. TELEPHONE NO. *(Include area code)*
	16. REMITTANCE ADDRESS *(Include only if different than Item 14)* **See Item 14**
CODE / FACILITY CODE	

17. The offeror agrees to perform the work required at the prices specified below in strict accordance with the terms of this solicitation, if this offer is accepted by the Government in writing within _____ calendar days after the date offers are due. *(Insert any number equal to or greater than the minimum requirements stated in Item 13D. Failure to insert any number means the offeror accepts the minimum in Item 13D.)*

AMOUNTS	SEE SCHEDULE OF PRICES

18. The offeror agrees to furnish any required performance and payment bonds.

19. ACKNOWLEDGMENT OF AMENDMENTS

(The offeror acknowledges receipt of amendments to the solicitation -- give number and date of each)

AMENDMENT NO.										
DATE										

20A. NAME AND TITLE OF PERSON AUTHORIZED TO SIGN OFFER *(Type or print)*	20B. SIGNATURE	20C. OFFER DATE

AWARD ***(To be completed by Government)***

21. ITEMS ACCEPTED:

22. AMOUNT	23. ACCOUNTING AND APPROPRIATION DATA

24. SUBMIT INVOICES TO ADDRESS SHOWN IN *(4 copies unless otherwise specified)*	**ITEM**	25. OTHER THAN FULL AND OPEN COMPETITION PURSUANT TO ☐ 10 U.S.C. 2304(c) ☐ 41 U.S.C. 253(c)
26. ADMINISTERED BY CODE		27. PAYMENT WILL BE MADE BY: CODE

CONTRACTING OFFICER WILL COMPLETE ITEM 28 OR 29 AS APPLICABLE

☐ 28. NEGOTIATED AGREEMENT *(Contractor is required to sign this document and return _____ copies to issuing office.)* Contractor agrees to furnish and deliver all items or perform all work, requisitions identified on this form and any continuation sheets for the consideration stated in this contract. The rights and obligations of the parties to this contract shall be governed by (a) this contract award, (b) the solicitation, and (c) the clauses, representations, certifications, and specifications or incorporated by reference in or attached to this contract.

☐ 29. AWARD *(Contractor is not required to sign this document.)* Your offer on this solicitation, is hereby accepted as to the items listed. This award consummates the contract, which consists of (a) the Government solicitation and your offer, and (b) this contract award. No further contractual document is necessary.

30A. NAME AND TITLE OF CONTRACTOR OR PERSON AUTHORIZED TO SIGN *(Type or print)*		31A. NAME OF CONTRACTING OFFICER *(Type or print)* TEL: EMAIL:
30B. SIGNATURE	30C. DATE	31B. UNITED STATES OF AMERICA BY / 31C. AWARD DATE

Section 00010 - Solicitation Contract Form

NOTICE TO OFFERORS

NOTICE TO OFFERORS

1. HAND-CARRIED OR MAILED PROPOSALS:

All proposals must be clearly identified with the contractor's name and address. To ensure timely and proper handling, the lower left corner of the outermost wrapper must indicate the Request For Proposal No., Due Date of Proposal, Time by which Proposals are Due, and Title of Project.

The Government will not be responsible for proposals delivered to any location or to anyone other than those designated to receive proposals on its behalf as indicated below.

Proposals delivered by commercial carrier and those sent by U.S. Mail, including U.S. Express Mail, must be addressed as indicated below. Proposals shall not be addressed to any specific person.

U.S. Army Engineer District, Savannah
ATTN: CESAS-CT-C
100 West Oglethorpe Avenue
Savannah, Georgia 31401-3640

Mailroom personnel on the first floor of 100 West Oglethorpe Avenue must receive proposals sent by U.S. Mail or delivered by commercial carrier by the time specified in Block 13 of the SF1442 for receipt of proposals.

Hand-carried proposals must also be delivered to mailroom personnel on the first floor of 100 West Oglethorpe Avenue by the time specified in Block 13 of SF1442 for receipt of proposals. Due to increased security requirements it is suggested that hand carried proposals be delivered 30 minutes prior to the specified time of receipt.

Offerors are cautioned that there is no parking in or around the building, and visitors must pass through security and sign in prior to being allowed access to the mailroom. Sufficient time must therefore be allowed when hand carrying proposals.

2. FACSIMILE MODIFICATIONS OF PROPOSALS ARE NOT AUTHORIZED.

SUPPLIES OR SERVICES AND PRICE/COSTS SCHEDULE

CORROSION CONTROL DE-PAINT FACILITY
ROBINS AFB, GA

TOTAL BASE BID (ITEMS 0001 THRU 0005)----------$_____

TOTAL BASE BID PLUS OPTIONS 1 THRU 9----------$_____
(ITEMS 0001 THRU 0015)

ITEM NO	SUPPLIES/SERVICES	QUANTITY	UNIT		AMOUNT
0001		1	Lump Sum		_____
	BASE BID ENGINEERING, DESIGN SERVICES AND CONSTRUCT A DE-PAINT FACILITY, INCLUDING SITE WORK, PREPARATION AND DEVELOPMENT, UTILITIES; DESIGN, CONSTRUCT ADDITION/ALTERATIONS BUILDING 44; AND DEMOLITION OF BUILDINGS 51,55 and 60, COMPLETE				

ITEM NO	SUPPLIES/SERVICES	QUANTITY	UNIT	UNIT PRICE	AMOUNT
0002		5	Square Meter	_____	_____
	BASE BID REMOVAL AND DISPOSAL, ASBESTOS FLOOR TILE AND MASTIC				

ITEM NO	SUPPLIES/SERVICES	QUANTITY	UNIT	UNIT PRICE	AMOUNT
0003		5	Square Meter	_____	_____
	BASE BID REMOVAL AND DISPOSAL, ASBESTOS DUCT INSULATION AND MASTIC				

ITEM NO	SUPPLIES/SERVICES	QUANTITY	UNIT	UNIT PRICE	AMOUNT
0004		5	Square Meter	_____	_____
	BASE BID REMOVAL AND DISPOSAL, ASBESTOS PIPE INSULATION				

ITEM NO	SUPPLIES/SERVICES	QUANTITY	UNIT	UNIT PRICE	AMOUNT
0005		22.70	KG	_____	_____
	BASE BID REMOVAL AND DISPOSAL, SPECIAL WASTE				

ITEM NO	SUPPLIES/SERVICES	QUANTITY	UNIT		AMOUNT
0006		1	Lump Sum		_____
	OPTION 1 ENGINEERING, DESIGN SERVICES AND CONSTRUCT AND INSTALL AIR CONDITIONING DE-PAINT HLANGAR BAY, CONSTITUTES DE-PAINT PORTION OF AIR CONDITIONING PLANT CONSTRUCTED IN ADDITION TO OPTION 0004				

ITEM NO	SUPPLIES/SERVICES	QUANTITY	UNIT	UNIT PRICE	AMOUNT
0007					
	DELETED				

ITEM NO	SUPPLIES/SERVICES	QUANTITY	UNIT	UNIT PRICE	AMOUNT
0007AA		5			
	DELETED				

ITEM NO	SUPPLIES/SERVICES	QUANTITY	UNIT	UNIT PRICE	AMOUNT
0007AB		1			
	DELETED				

ITEM NO	SUPPLIES/SERVICES	QUANTITY	UNIT	UNIT PRICE	AMOUNT
0007AC					
	DELETED				

ITEM NO	SUPPLIES/SERVICES	QUANTITY	UNIT	UNIT PRICE	AMOUNT
0007AD					
	DELETED				

ITEM NO	SUPPLIES/SERVICES	QUANTITY	UNIT	AMOUNT
0008		1	Lump Sum	_____
	OPTION 2 ENGINEERING, DESIGN SERVICES AND CONSTRUCTION, ACQUISITION AND INSTALLATION OF DE-PAINT FACILITY EQUIPMENT, COMPLETE			

ITEM NO	SUPPLIES/SERVICES	QUANTITY	UNIT	AMOUNT
0009		1	Lump Sum	_____
	OPTION 3 ENGINEERING. DESIGN SERVICES, AND CONSTRUCT A PAINT FACILITY, INCLUDING SITE PREPARATION AND DEVELOPMENT, INCLUDING UTILITIES, SITE WORK, DEMOLITION OF BUILDINGS 53 AND 56, COMPLETE			

ITEM NO	SUPPLIES/SERVICES	QUANTITY	UNIT		AMOUNT
0010		1	Lump Sum		_____

OPTION 4
ENGINEERING, DESIGN SERVICES, AND CONSTRUCT AND INSTALL OF AIR CONDITIONING PAINT HANGAR BAY, COMPLETE

ITEM NO	SUPPLIES/SERVICES	QUANTITY	UNIT		AMOUNT
0011		1	Lump Sum		_____

OPTION 5
ENGINEERING, DESIGN SERVICES, CONSTRUCTION, ACQUISITION AND INSTALLATION OF PAINT FACILITY EQUIPMENT, COMPLETE

ITEM NO	SUPPLIES/SERVICES	QUANTITY	UNIT	UNIT PRICE	AMOUNT
0012		5	Square Meter	_____	_____

OPTION 6
REMOVAL AND DISPOSAL, ASBESTOS FLOOR TILE AND MASTIC

ITEM NO	SUPPLIES/SERVICES	QUANTITY	UNIT	UNIT PRICE	AMOUNT
0013		5	Square Meter	_____	_____
	OPTION 7 REMOVAL AND DISPOSAL, ASBESTOS DUCT INSULATION AND MASTIC			_	

ITEM NO	SUPPLIES/SERVICES	QUANTITY	UNIT	UNIT PRICE	AMOUNT
0014		5	Square Meter	_____	_____
	OPTION 8 REMOVAL AND DISPOSAL, ASBESTOS PIPE INSULATION			_	

ITEM NO	SUPPLIES/SERVICES	QUANTITY	UNIT	UNIT PRICE	AMOUNT
0015		22.70	KG	_____	_____
	OPTION 9 REMOVAL AND DISPOSAL, SPECIAL WASTE			_	_

CLAUSES INCORPORATED BY FULL TEXT

52.232-4001 COST LIMITATION – JUNE 1999

The contract award for design and construction shall not exceed as follows:

The contract award for design and construction shall not exceed the following limitations (offerors are under no obligation to approach these amounts):

Base Bid	$22,004,560
Options 3,6,7,8,9	$23,790,103

The above cost limitations are based on Conventional Design/Review/Approval/Construction and/or Fast Track Design/Construction Schedule.

Option 1 will not be awarded unless Option 4 is awarded.

Options 1,2,4, and 5 are funded with CPP, Transformation CCP and Pacer Expense 670 funding.

Options 3,6,7,8, and 9 will not be immediately awarded because the project is funded with FY04 funds. It is believed that the project will be funded; however cannot be guaranteed.

Offerors are under no obligation to approach this amount.

(End of Clause)

NOTES TO OFFERORS

PREPROPOSAL CONFERENCE

GENERAL: The Government will hold a preproposal conference at Robins Air Force Base, Georgia on 16 June 2003 beginning at 9:00 AM in the Conference Room in Building 1555, 775 Macon Street, Robins Air Force Base, Georgia 31098-2207. All Offerors are strongly encouraged to attend this conference. The conference will be conducted in two parts. In the first part, the Government will hold an information session, at which time the Government will explain the evaluation process and the key elements of the technical requirements. The Government will then conduct a site visit of the site designed for this project. Following the site visit, there will be a question and answer session.

QUESTIONS/ANSWERS: The Government requests that questions be provided in writing in advance of the conference. Questions may be submitted via e-mail to Mr. Julian Fant at elliott.williamson@sas02.usace.army.mil. At the conference the Government will accept and attempt to answer additional written questions after advance questions have been addressed.

REGISTRATION: Contractors are requested to register prior to the conference by providing the name and firm for each attendee. This information should be submitted to elliott.williamson@sas02.usace.army.mil or by phone at (478) 926-2103.

ENTERING ROBINS AIR FORCE BASE: Contractors are to allow adequate time to process through security checkpoint.

ACCOMMODATIONS: Attendees are responsible for their own travel and hotel accommodations.

NOTE No. 1. Offerors must insert a price on all numbered items of the Schedule. Failure to do so will disqualify the bid.

NOTE No. 2. The field overhead costs through the contract duration are inclusive in the offered price for the contract, regardless of whether a compressed schedule is proposed.

NOTE No. 3. COST LIMITATION;

The contract award for design and construction shall not exceed the following limitations (offerors are under no obligation to approach these amounts):

Base Bid	$22,004,560
Options 3,6,7,8,9	$23,790,103

The above cost limitations are based on Conventional Design/Review/Approval/Construction and/or Fast Track Design/Construction Schedule.

Option 1 will not be awarded unless Option 4 is awarded.

Options 1, 2, 4, and 5 are funded with CPP, Transformation CCP and Pacer Expense 670 funding.

Options 3,6,7,8 and 9 will not be immediately awarded because the project is funded with FY04 funds. It is believed that the project will be funded; however cannot be guaranteed.

NOTE No. 6: Technical Evaluation Proposal Rating Worksheet, Factor 2-5b, Schedule Information, states that your proposed schedule will be considered more favorably if it indicates project completion prior to the Government indicated maximum duration. In addition to those submittals, indicate below your proposed contract completion period and intent of fast tracking. The contract completion days the offeror proposes will be made a part of the contract and of which liquidated damages will apply.

Contract Performance Period (Base Bid plus Option 2) _____ Calendar Days

Contract Performance Period (Base Bid plus All Options) _____ Calendar Days

Fast Tracking _____ yes _____ no

Section 00100 - Bidding Schedule/Instructions to Bidders

SUBMISSION AND EVALUATION

PROPOSAL SUBMISSION REQUIREMENTS AND INSTRUCTIONS

1. PROPOSAL OVERVIEW.

1.1 General. In as much as the proposal will describe the capability of the offeror to perform any resultant contract, as well as describe its understanding of the requirements of the Statement of Work, it should be specific and complete in every detail. The proposal should be prepared simply and economically, providing straightforward, concise delineation of capabilities to satisfactorily perform the contract being sought. The proposal should therefore be practical, legible, clear and coherent.

1.2 Proposal Submissions and the Two (2) Phase Design-Build Process. This process requires potential contractors to submit their performance and capability information initially (Phase 1) for review and consideration by the Government. Following the review, evaluation, and rating of these proposals, the Government will select up to three of the highest rated contractors to receive the technical requirements package and provide a technical and cost proposal for consideration by the Government at Phase 2. The technical and cost proposals of the selected contractors will be reviewed by the Government. The technical information contained in the Phase 2 proposal will be reviewed and evaluated by the Government in accordance with the evaluation criteria set out in PHASE 2 EVALUATION MANUAL. The final evaluation rating used for comparison, selection, and award will reflect both the rating received in Phase 1 and the evaluation rating received in Phase 2. Cost information will not be rated in either phase but will be evaluated in response to the funding limitations set out in Section 00010 – PRICE PROPOSAL SCHEDULE and other offeror's price proposals.

1.3 FOR THOSE CONTRACTORS WHO COMPETE IN BOTH PHASE 1 AND PHASE 2, THE CONTRACTOR'S PROPOSAL SHALL BE DEFINED AS ALL INFORMATION, WHICH WAS SUBMITTED IN RESPONSE TO THE REQUIREMENTS OF BOTH PHASES OF THE SOLICITATION.

1.4 Compliance Statement: The Offerors selected to compete in Phase 2 are required to certify that all items submitted in its technical proposal comply with the RFP requirements and any differences, deviations or exceptions have been identified and explained. Offerors are required to complete the statement and submit it with their technical proposal. Even if there are no differences, deviations or exceptions, the Offeror must submit the Compliance Statement and state that none exist.

Statement of Compliance

[*Insert name of the offeror*] hereby certifies that all items submitted in this proposal and final design documents (after contract award) comply with the solicitation requirements. The criteria specified in Request for Proposal No. [*Insert RFP Number*] are binding contract criteria and in case of any conflict after award, between [*Insert RFP Number*] and the contractor's proposal, the Request for Proposal criteria shall govern unless there is a written and signed agreement between the contractor and the Government waiving a specific requirement. Should this proposal result in the award of a contract. This statement will be included on each sheet of drawings and on the cover of the specifications.

1.5 Exceptions. Exceptions to the contractual terms and conditions of the solicitation (e.g., standard company terms and conditions) must not be included in the proposal.

1.6 TWO-PHASE DESIGN-BUILD STIPENDS AND LIMITED RIGHTS TO TECHNICAL DESIGN PROPOSALS

(a) This Solicitation uses the Two-Phase Design-Build selection procedures, as described in FAR Sub Part 36.3, and provides for payment of a "stipend" to those unsuccessful Phase Two offerors, not selected for award of the resulting Design-Build contract.

(b) The Government offers to pay a stipend of $90,000.00 to the unsuccessful Phase Two Offerors in consideration for preparation of a Phase Two technical design proposal, otherwise meeting the minimum requirements described herein, and in consideration for the unsuccessful offeror granting the Government the limited rights to use the technical design proposal, as described herein.

(c) Acceptance of a stipend is voluntary. An otherwise eligible, unsuccessful Phase Two Offeror may decline acceptance of a stipend. In that event, the Offeror will retain full rights to its Phase Two proposal and the Government's rights, described in this clause, are inapplicable to that proposal.

(d) Upon acceptance of a stipend by the unsuccessful Phase Two Offeror, the Government may utilize all or any part of the Offeror's technical design proposal in solicitations or contracts for other projects, whether they be for design-build or for traditional full design-bid-build construction, renovation maintenance or repair projects. In that event, all provisions of the DFARS Clause: "GOVERNMENT RIGHTS (UNLIMITED) or the DFARS Clause: "DRAWINGS AND OTHER PROPERTY TO BECOME THE PROPERTY OF THE GOVERNMENT", as applicable to this Solicitation, are applicable.

(e) If the Government deems it desirable to adopt or use any feature of a technical design proposal in the design-build contract resulting from this Solicitation, from an unsuccessful Phase Two Offeror, which accepted a stipend, the following rights are applicable.

(1) The Government may use those features of an unsuccessful Offeror's proposal which were not a significant evaluation criteria used in a Best Value Trade-off process, in comparison of the unsuccessful Offeror's proposal with the successful Offeror's proposal, unless both proposals were rated essentially equal for that evaluation criteria and where the comparison between those features did not significantly affect the selection determination, either by itself or in combination with other similar comparisons of relatively equally rated evaluation criteria.

(2) The Government agrees not to incorporate a feature of an unsuccessful proposal, without that Offeror's written authorization if, in a trade-off analysis between the proposal and the successful proposal, the feature was considered to be significantly more advantageous than the same or related feature in the successful proposal. The Government also agrees not to incorporate multiple features of an unsuccessful proposal, without that Offeror's written authorization, which, in combination, would significantly improve the successful design.

(3) Notwithstanding the restrictions in paragraphs (1) and (2) above, the Government may incorporate features from separate, unsuccessful design proposals which individually meet those restrictions but in combination, may result in significant improvement to the final design of this project.

(f) To be eligible for a stipend, the unsuccessful Offeror's technical design proposal must be essentially rated as "Satisfactory" in all Phase Two technical evaluation criteria areas and must be considered a "conforming proposal," essentially conforming to this Solicitation's Government furnished design criteria.

2. PHASE 1 PROPOSAL SUBMISSION INSTRUCTIONS

2.1 Who May Submit.

2.1.1 Proposals may be submitted by firms formally organized as design/build entities, or by design firms and construction contractors that have associated specifically for this project. In the latter case, a single design firm or construction contractor may offer more than one proposal by entering into more than one such association. For the

purpose of this solicitation, no distinction is made between formally organized design/build entities and project-specific design/build associations. Both are referred to as the design/build offeror, (or simply "Offeror"), or the design/build contractor, (or simply "Contractor"), after award of a contract.

2.1.2 Any legally organized Offeror may submit a proposal.

2.2 Where to Submit. Offerors shall submit their proposal packages to the Savannah District at the address shown in Block 7 of Standard Form 1442.

2.3 Submission Deadline. Proposals shall be received by the Savannah District no later than the time and date specified in Block 13 of Standard Form 1442.

2.4 General Requirements.

2.4.1 In order to effectively and equitably evaluate all proposals, the Contracting Officer must receive information sufficiently detailed to allow review and evaluation by the Government.

2.4.2 Tabs. Proposal shall be organized and tabbed as shown.

2.4.3 Size of Printed Matter Submissions.

2.4.3.1 Written materials shall be on 8-1/2" x 11" paper.

2.4.3.2 The proposals shall contain a detailed table of contents. If more than one binder is used, the complete table of contents shall be included in each. Any materials submitted but not required by this solicitation, (such as company brochures), shall be relegated to appendices.

2.4.4 Number of Copies. Offerors shall submit the original and five (5) hard copies of their Phase One Proposal.

2.4.5 Electronic Copy of Submissions. In addition to the hard copies of the proposal, Offerors shall also submit the Phase 1 Proposal on a CD ROM disk. The proposal should be in MS Word, Adobe Acrobat PDF file, or WordPerfect format. The electronic version shall be either a single file tabbed in the same order as the hard copy or multiple files hyperlinked to a single table of contents.

2.5 Submission Format.

2.5.1 The Phase One Proposal will be tabbed and submitted in a three ring binder in the following format:

PHASE 1 PROPOSAL

TAB A

SF 1442
Section 00600 – Representations and Certifications
PROPOSAL DATA SHEET

TAB B – FACTOR 1-1 Offeror Past Performance Information

Past Performance Information Sheets

TAB C – FACTOR 1-2 Technical Approach Narrative

TAB D – FACTOR 1-3 Corporate Relevant Specialized Experience

Corporate Relevant Specialized Experience Sheets (Example Projects)

TAB E - Other Information

THE FOLLOWING FACTORS WILL BE EVALUATED IN PHASE I:

Factor 1-1 Offeror Past Performance
Factor 1-2 Technical Narrative Approach
Factor 1-3 Corporate relevant Specialized Experience

All three factors are equal in value.

2.6 CONTRACTOR SUBMITTAL for TAB B – FACTOR 1-1 Offeror Past Performance Information. A sample Past Performance Evaluation Questionnaire is included at the end of this section. The offeror shall identify the three completed projects (or substantially complete) to be used for reference and evaluation purposes and provide a questionnaire to the Point of Contact for each project listed for completion. When completed, these forms shall be mailed, or e-mailed to the Savannah District Contract Specialist identified in the sample transmittal letter provided. It is the contractor's responsibility to ensure that the reference documentation is provided. The Government may not make additional requests for past performance information from the references. Copies of the evaluation form shall be provided to the Savannah District directly from the reference. **Projects from which questionnaires are received shall have been completed within five years of the date of this solicitation.** The Government may contact sources other than those provided by the Offeror for information with respect to past performance. These other sources may include CCASS (Construction Contractor Appraisal Support System), ACASS (Architect-Engineer Contractor Appraisal Support System), telephone interviews with organizations familiar with the Offeror's performance, and Government personnel with personal knowledge of the Offeror's performance capability. The experience of individuals will not be credited under this factor but will be evaluated under "Project Key Personnel" in Phase 2.

2.6.1 EVALUATION OF FACTOR 1-1 OFFEROR PAST PERFORMANCE INFORMATION.

The Government will evaluate the Offeror's past performance using the sources available to it including, the example projects identified by the Offeror, Past Performance Evaluation Questionnaires received, ACASS, and CCASS. Offerors may be provided an opportunity to address any negative past performance information about which the Offeror has not previously had an opportunity to respond. The Government treats an Offeror's lack of past performance as having no positive or negative evaluation significance. The experience of individuals will not be credited under this factor but will be evaluated under "key personnel." The Government will evaluate past performance based on the elements listed below:

Quality of Construction. Based on information provided in the questionnaire and other information, the Government will assess the quality of the actual construction undertaken and the standards of workmanship exhibited by the Offeror's team.

Timeliness of Performance. The Government will evaluate all information available with respect to the Offeror completing past projects within the scheduled completion times.

Documentation. The Government will evaluate all information available with respect to the Offeror's level of meeting customer satisfaction on timeliness and quality of the documentation, reports, and other written materials completed by the Offeror on past projects.

Customer Satisfaction. The Government will evaluate all information available with respect to the Offeror's past customer satisfaction, cooperation with customers, and interaction on past projects.

Subcontractor Management. The Government will evaluate all information available with respect to the Offeror's management of subcontractors on past projects.

2.7 CONTRACTOR SUBMITTAL FOR TAB C – FACTOR 1-2 Technical Approach Narrative. Describe in general terms how the offeror will approach the design and construction of these facilities. Technical Approach Narrative shall be limited to a maximum of ten (10) typewritten pages, 12 pitch, and double-spaced**.** At a minimum the narrative should address the following:

Does the Offeror demonstrate a suitable understanding of the process to enable it to adequately address and anticipate the risks associated with Design/Build processes?

The roles and responsibilities of the various sub-contractors for design, construction and equipment acquisition shall be addressed.

How does the Offeror continue the design phase of the project and incorporate User comments and reviews into the process?

The Offeror's Design Quality Control Program shall be briefly described.

What is the design team's involvement throughout the construction period?

How does the Offeror integrate construction subcontractors into the design process?

What are the Offeror's processes for handling construction, design, and equipment acquisition problems?

Offeror's implementation plans to utilize "fast track" procedures on this project whereby preliminary site construction activities can begin prior to 100% completion of the design documents.

Offerors are cautioned that this narrative shall not exceed ten (10) pages and that the Government review staff will review and evaluate only the information contained on the first ten pages in this section.

2.7.1 EVALUATION OF FACTOR 1-2 TECHNICAL APPROACH NARRATIVE.

The Government will evaluate the overall understanding of the two-phase design-build process being used in this solicitation including the following:

Does the Offeror demonstrate a suitable understanding of the process to enable it to adequately address and anticipate the risks associated with Design/Build processes?

The roles and responsibilities of the various sub-contractors for design, construction and equipment acquisition shall be addressed.

How does the Offeror continue the design phase of the project and incorporate User comments and reviews into the process?

The Offeror's Design Quality Control Program shall be briefly described.

What is the design team's involvement throughout the construction period?

How does the Offeror integrate construction subcontractors into the design process?

What are the Offeror's processes for handling construction, design and equipment acquisition problems?

Offeror's implementation plans to utilize "fast track" procedures on this project whereby preliminary site construction activities can begin prior to 100% completion of the design documents.

2.8 CONTRACTOR SUBMITTAL FOR TAB D – FACTOR 1-3 CORPORATE RELEVANT SPECIALIZED EXPERIENCE.

Provide at least three examples of projects for which the offeror has been responsible. The examples should be as similar as possible to this solicitation in project type and scope. Provide references (with contract names and telephone numbers) for all examples cited. Each example shall indicate the general character, scope, location, cost, and date of completion of the project. Offeror should clearly define their role in the project. If the offeror represents the combining of two or more companies for the purpose of this RFP, each company shall list project examples. **Example projects must have been completed not later than five years prior to the date of this solicitation**. The experience of individuals will not be credited under this factor but will be evaluated under "Project Key Personnel" in Phase 2.

2.8.1 EVALUATION OF FACTOR 1-3 CORPORATE RELEVANT SPECIALIZED EXPERIENCE

The Government will review the example projects provided by the Offeror to evaluate and rate the recent experience of the Offeror in similar projects. The example projects, which most closely resemble the project identified in this solicitation, will receive the highest consideration. If the Offeror cannot provide suitable relevant experience and the evaluators consider that the information provided indicates that the Offeror has no relevant experience, a determination will be made as to the risk this lack of corporate experience presents to the Government and the proposal will be evaluated accordingly. Experience will be evaluated using the elements listed below. The experience of individuals will not be credited under this factor but will be evaluated under "key personnel" in Phase Two.

Similar construction projects completed: **The Government will evaluate the number and size of contracts completed, or substantially completed, by the Offeror of similar scope and complexity in the past five (5) years.**

Multiple phasing type construction projects completed: The Government will evaluate overall corporate experience in performing construction contracts in which phasing, maintaining facilities in operations and close coordination with the customer was involved.

Military construction projects completed: **The Government will evaluate the number and size of large military construction projects undertaken by the Offeror in the past five (5) years.**

2.9 No cost information shall be included in the Phase 1 proposal package.

3. PHASE 2 PROPOSAL SUBMISSION INSTRUCTIONS

3.1 Who May Submit. Proposals may be submitted by the Offerors who receive written notification from the Savannah District Contracting Officer that their firm has been selected to participate in Phase 2 of this solicitation. No more than three Offerors will compete in Phase 2 under typical circumstances. The Government intends to announce the names of Offerors selected for Phase 2 in the FEDBIZOPS website unless an Offeror provides written notification and explanation for not wanting this information released.

3.2 General Requirements.

3.2.1 Title Page. Include the title of the solicitation, solicitation number, Offeror name, and date of the submittal.

3.2.2 Table of Contents. The proposals shall contain a detailed table of contents. If more than one binder is used, the complete table of contents shall be included in each. Any materials submitted but not required by this solicitation, (such as company brochures), shall be relegated to appendices.

3.2.3 Tabs. Proposal shall be organized and tabbed as shown.

3.2.4 Size of Printed Matter Submissions.

3.2.4.1 Written materials: 8-1/2" x 11" format.

3.2.5.2 Drawing sheets:

3.2.5.2.1 Offerors shall submit one set of full size drawings (approximately 30" x 42").

3.2.5.2.2 Offerors shall submit five half-size sheets (approximately 15" x 21").

3.2.5.3.3 Drawings shall be bound.

3.2.5.3.4 Drawings submitted for the proposal may be done with any CAD software available to the Offeror. However, the drawings for 60% and Final design submittals will be done and submitted in the latest version of Microstation format only. Conversions from AutoCAD are discouraged because of file incompatibility and the added work necessary for the conversion.

3.2.5.4 Electronic Submission. In addition to the hard copies required above, all Offerors that advance to Phase 2 shall submit on a CD-ROM their complete submittal. This includes the Phase One Submission and the Phase Two Submission (Volumes I and II) including all drawings. Written portions of the proposal should be in MS Word, Adobe Acrobat PDF, or WordPerfect format. The electronic version shall be either a single file tabbed in the same order as the hard copy or multiple files hyperlinked to a single table of contents. Drawings should be in one of the following formats: Microstation DGN, Adobe Acrobat PDF, Max View CAL (with Sendable INDEX.SVD), or Auto Cad DWG. Any portion of the proposal not available in electronic format, i.e. cut sheets, should be scanned in Adobe Acrobat PDF format. The CD ROM must be clearly labeled by solicitation number, project name, installation, and Offeror's name.

3.3 SUBMISSION FORMAT PHASE 2 PROPOSAL, VOLUME I – Contract Requirements & Price Proposal

3.3.1 Submit original and one (1) copy of VOLUME I - Contract Requirements & Price Proposal. This information shall be submitted in separate three-ring binders labeled "Contract Requirements & Price Proposal" and will be organized as follows:

TAB A – SF 1442, completed and signed by an authorized person from the company or team.
TAB B – Proposal Schedule “Supplies or Services Price/Cost”
TAB C – Bid Bond
TAB D– Financial Information (latest financial statement, annual reports, Dun & Bradstreet Ratings etc.)
TAB E – Statement of Compliance (See paragraph 1.4)

3.4 SUBMISSION FORMAT PHASE 2 PROPOSAL, VOLUME II – Technical Proposal Offerors shall submit original and five (5) copies of VOLUME II and five (5) half-size copies of all drawings and one (1) full-size copy of all

drawings. Information shall be submitted in separate three-ring binders labeled "Technical Information" and shall be organized as follows:

VOLUME II –TECHNICAL INFORMATION.

TAB A – BETTERMENTS

TAB B – FACTOR 2-1: BUILDING FUNCTION AND AESTHETICS

TAB C – FACTOR 2-2: BUILDING SYSTEMS
TAB D – FACTOR 2-3: EQUIPMENT
TAB E – FACTOR 2-4: SITE DESIGN CONSIDERATIONS
TAB F – FACTOR 2-5: OFFEROR MANAGEMENT PLANS AND SCHEDULES
TAB G – ANY OTHER INFORMATION PROVIDED BY THE OFFEROR

DRAWINGS (Minimum drawings required are outlined in each section)

3.4.1 The technical data described below shall be submitted as part of the formal proposal. All alternate designs shall be graphically described on separate drawings from the basic proposal. Offerors are advised that the required data listed below will be utilized for technical review and evaluation and used for determination of a "Quality Rating" by a Technical Evaluation Team. Materials indicated in the design/construction criteria, but not indicated in the Offeror's specifications, will be assumed to be included and a part of the proposal. Designs, catalog cuts, etc. submitted in response to Factors 2-1 thru 2-5 below will address the Base Bid and all Options unless specifically indicated differently (e.g. floor plans will be submitted for the De-paint facility (Base Bid) and the Paint Facility (Option 3)). Design, catalog cuts, etc. submitted will be clearly identified as to what it is associated (e.g. Base Bid, Option 1, etc.).

3.4.2 Incomplete Proposals. Failure to submit all the data indicated in this section may be cause for determining a proposal incomplete and, therefore, not considered for technical evaluation in Phase 2, or for subsequent award.

3.5 PHASE 2 EVALUATION FACTORS AND SUB-FACTORS:

Factor 2-1 Building Function and Aesthetics

Sub-factor 2-1a Functional Arrangement
Sub-factor 2-1b Building Aesthetics
Sub-factor 2-1c Appropriate Facilities
Sub-factor 2-1d Minimum Space and Facility Size

Factor 2-2 Building Systems

Sub-factor 2-2a Building Heating, Ventilation, Plumbing Sysstems and Fire Protection
Sub-factor 2-2b Building Structural Systems
Sub-factor 2-**2**c Electrical Power Lighting, Grounding and Communication Systems.

Factor 2-3 Equipment

Factor 2-4 Site Development

Sub-factor 2-4a Area Development
Sub-factor 2-4b Force Protection Considerations
Sub-factor 2-4c Site Utilities

Factor 2-5 Management Plans and Schedules

Sub-factor 2-5a Key Personnel
Sub-factor 2-5b Schedule
Sub-factor 2-5c Small & Disadvantage Business Utilization.

Weights among factors and sub factors:

Factor 2-1 Building Function and Aesthetics, Factor 2-2 Building Systems and 2-3 Equipment are equal and more important than Factor 2-4 Site Development and Factor 2-5 Offeror Management Plans and Schedules. Factor 2-4 Site Development is more important than Factor 2-5 Management Plans and Schedules.

Factor 2-1 Building Function and Aesthetics, sub factor 2-1a Functional Arrangement is more important the sub factor 2-1b Building Aesthetics. Sub factor 2-1c Appropriate Facilities and 2-1d Minimum Space and Facility Size are "Go/No Go" factors and will be rated as pass/fail.

Factor 2-2 Building Systems, sub factor 2-2a Building Heating, Ventilation, Plumbing Systems and Fire Protection is equal to sub factor 2-2b Building Structural Systems and more important than sub factor 2-2 c Electrical Power Lighting, Grounding and Communication Systems.

Factor 2-4 Site Design sub factor 2-4a Area Development is more important than sub factor 2-4b Force Protection Considerations and sub factor 2-4c Site Utilities. Sub factors 2-4b **Force Protection** and 2-4c **Site Utilities** are equal in weight.

Factor 2-5 Offeror Management Plans and Schedules, sub factor 2-5a Key Personnel and sub factor 2-5b Schedule are equal and more important that 2-5c Small and Disadvantage Business Utilization.

TECHNICAL FACTORS when combined are more important than PRICE.

4. TAB A – BETTERMENTS

4. 1 Definition of Betterments. "Betterment" is defined as any component or system, which meets and exceeds the minimum requirements, stated in the Request for Proposal. This includes all proposed betterments listed in accordance with the "Proposal Submission Requirements" of this TAB, and all Government identified betterments.

4.2 During discussions, the Government may request that betterments be removed from the Offeror's proposal in order to reduce costs.

4.3 The minimum requirements of the contract are identified in the Request for Proposal. All betterments offered in the proposal become a requirement of the awarded contract.

4.4 Submission of Betterments. The Offeror shall identify "Betterments" in the following manner:

Short descriptive title of the betterment and how it exceeds RFP requirements.

Narrative of the proposed betterment and rationale as to why it has been included.

Reference in the Offeror's proposal where the betterment is shown or specified.

Estimated value of the betterment.

5. CONTRACTOR SUBMITTAL FOR TAB B-FACTOR 2-1: BUILDING FUNCTION AND AESTHETICS

5.1 Architectural Narrative. State the proposed image or design theme of this proposal. Describe interior design theme. Describe any special features or finishes that contribute to the proposed design theme. Describe construction of typical interior partitions. List all architectural deviations included in the proposal. Describe how the interior space arrangement supports the process equipment systems and how it supports the control of contaminants into the "clean" areas. Describe how the architectural layout/features (especially the dock roof/ceiling profile) impact the mechanical systems (uniformity of air flow, total quantity of air flow), equipment (aircraft access systems such as tail stands and telescoping manlifts) and electrical systems (lighting, non-explosion-proof areas). Describe any "trade-off" considerations made, such as increased wall/roof insulation decreasing the size/energy consumption of the mechanical systems.

5.2 List of Specifications. Provide a list of titles of specifications proposed to use in the design. It is not necessary to include sections required in this RFP.

5.3 Architectural Drawings. Drawings shall be provided in sufficient detail for reviewers to visualize how the designer has interpreted the RFP functional and operational requirements in his proposal. Drawings shall include, but not be limited to, the following:

5.3.1 Floor Plan(s). Floor plans for each floor shall be drawn accurately to scale and shall be shown at 1/8" = 1'-0" minimum scale unless otherwise noted. Show gross floor area tabulations on lower portion of plate. Label all spaces. Indicate net area of all spaces. Show all doors and windows. Show required furniture as dashed-line blocks to demonstrate that the spaces will accommodate the items. Show aircraft with dotted line. Show overall building dimensions. If the floor plan(s) must be drawn in segments in order to comply with the requirements on the proper scale, provide a separate 1/16"=1'-0" or smaller scale composite floor plan showing exterior walls, interior partitions, circulation elements and cross referencing for enlarged floor plans.

5.3.2 Building Elevations. Exterior elevations shall be drawn to 1/8"=1'-0" scale for all four major building elevations. If elevations must be drawn in segments in order to comply with the requirements on proper scale, provide separate 1/16"=1'-0" or smaller composite elevations as required to fit on one sheet. Elevations shall show all windows, doors, canopies, and platforms. All building exterior materials and roof pitches shall be noted clearly.

5.3.3 Typical Wall Section. Provide one exterior wall section indicating the predominant exterior wall and wall/roof intersection condition. Show overall wall thickness and eave height. Note all materials. Wall section shall be unbroken where practical and drawn at ¾"= 1'-0" scale.

5.3.4 Roof Plan. Roof plans for each building shall be drawn accurately to scale and shall be shown at least 1/16" = 1'-0" minimum scale unless otherwise noted. All roof slopes shall be indicated.

5.4 EVALUATION OF FACTOR 2-1 BUILDING FUNCTION AND AESTHTICS

This factor considers the overall functional layout and interaction of the spaces in the facilities as well as exterior considerations. The sub factors to be considered deal with the planning and design of the spaces with respect to corrosion control de-paint and paint of aircraft. Closely associated with the functional layout of the spaces and facilities, this factor considers the aesthetics of the interior areas as well as the exterior finishes and design of the facilities, up to and including the overall environment created by the design proposed. The sub factors described below will be evaluated in the following order of importance:

Sub factor 2-1a is more important than sub factor 2-1b.

Sub factors 2-1c and 2-1d are “GO/NO GO” factors and will be rated as pass/fail without an adjectival component.

SUBFACTOR 2-1a. FUNCTIONAL ARRANGEMENT: The following items will be considered in the evaluation of the functional arrangement of the various facilities:

(a) Does the building floor plan provide space arrangement well suited to the mission of the facility? Does the proposal allow backing the aircraft in the hangar? Those proposals that have the aircraft backing into the hangars will be viewed nore favorably.

(b) Evaluate the Offeror’s floor plan with respect to the functional and spatial relationship requirements established in the Statement of Work.

(c) Does the Offeror’s floor plan demonstrate compliance with the mandatory requirements for equipment and aircraft while allowing suitable space for circulation and other requirements?

(d) Does the Offeror’s floor plan allow for suitable workflow and access necessary to successfully operate this facility in accordance with its mission? Does the proposal allow backing the aircraft in the hangars?

SUBFACTOR 2-1b. Building Aesthetics. The following items will be considered (Materials will be evaluated in Factor 2-2):

(1) Exterior Considerations:

(a) Facades, roof lines, and delineation of entrances.
(b) Proportions of fenestration in relation to elevations.
(c) Shadow effects, materials, and textures.
(d) Proportion and scale within the structure.
(e) Compliance with Installation Design Guide Recommendations
(f) Conformance to adjacent structures architectural styles
(g) Exterior color schemes proposed.
(h) Other aesthetic considerations.

(2) Interior Considerations:

(a) Do the ceiling heights, hallway widths, and other space sizes and configurations provided develop a workable solution to the facility mission?
(b) Does the interior design theme provide for an interesting, attractive environment?
(c) Is the interior system and finishes proposed suitable for use in an industrial facility? Are these systems suitable for a heavy usage environment?

SUBFACTOR 2-1c APPROPRIATE FACILITIES

From an overall perspective, does the proposal include all the required facilities as described in the Statement of Work?

SUBFACTOR 2-1d MINIMUM SPACE AND FACILITY SIZE

Does the proposal include all the mandatory spaces in response to the requirements set forth in the Statement of Work? For each of the spaces with a minimum limitation, does the proposal comply with these requirements? Insufficient information contained in the proposal to evaluate this item will be considered a “NO GO” and will represent a “FAIL” rating.

6. CONTRACTOR SUBMITTAL FOR TAB C – FACTOR 2-2: BUILDING SYSTEMS

6.1. STRUCTURAL SUBMITTAL REQUIREMENTS. The structural portion of the proposal must outline the proposed methods and materials of design and construction. The submittal shall include the following:

6.1.1 Structural Narrative. Provide a general description of the scope of the project and all of the major structures. Give overall building dimensions and a description of the principal features such as wall and roof construction proposed. If the building is irregularly shaped, explain where seismic joints will be placed to create regular shapes or provide a statement that a dynamic analysis of the building will be performed.

6.1.1.1 Provide a description of the framing system chosen.

6.1.1.2 Provide a description of the lateral load resisting system and how these loads will be transmitted to the foundations.

6.1.1.3 Provide a description of the anticipated foundations based on information provided in the RFP.

6.1.1.4 Provide a description/discussion on the structural framing deflection requirements that includes the teleplatform/crane loads, wind loads (lateral), etc.

6.1.1.5 Provide a list of special design features including features to be used in compliance with the AT/FP requirements.

6.1.2 Fire Resistance Statement. State the required fire resistance criteria for all portions of the structural system and the proposed method of meeting these requirements.

6.1.3 Design Analysis. State the live loads for which the facility is to be designed. Include roof and floor loads. Provide the wind loads, lateral earth pressure loads, seismic loads, etc. as applicable. Complete analysis is not necessary, only tabulation of loads is required.

6.1.4 Outline Specifications. The offeror shall provide a list of titles of specifications he proposes to use in the design, if sections are not provided in this RFP.

6.2 MECHANICAL SUBMITTAL REQUIREMENTS.

6.2.1 Heating, Ventilating, and Air Conditioning Narrative. Narrative of design analysis will contain the following:

6.2.1.1 Design conditions used in calculations - inside and outside temperatures, personnel load, outside air or ventilation requirements, U-factors, and other special conditions.

6.2.1.2 Block loads for heating and cooling shall be calculated using ASHRAE-based methods. Where passive solar applications prove feasible and cost effective, the Offeror shall employ a load calculation method that can incorporate all applicable passive solar factors. All load calculation software must be traditionally used by the industry.

6.2.1.3 A description of all HVAC systems to be considered in a life cycle cost analysis (LCCA). A LCCA, using the program LCCID, of each of the HVAC systems described shall be submitted by the successful contractor – after contract award, verifying that the system selected for the building is the most efficient and is within the energy budget. For additional requirements, see **the Statement of Work.**

6.2.1.4.A description of piping systems including type of pipe, insulation requirements, and whether concealed or exposed, including catalog cuts.

6.2.1.5 Show through sketches, drawings and calculations that the proposed equipment will provide uniform cross flow ventilation in the de-painting and painting areas. Equipment that offeror states " will provide the uniform cross flow ventilation" will be further identified by submitting catalog cut sheets. Only one catalog cut sheet will be submitted for each piece of equipment. Catalog cuts are used to establish a level of quality and become a contractual obligation upon contract award. Also discuss the De-paint and Paint hangar devices to adjust and balance the airflow at the supply and exhaust to provide uniform airflow across the cross section of the hangar.

6.2.1.6 **Controls System Narrative** . A description of the proposed Direct Digital Controls System to be used. Provide a description of the control system of the de-paint and paint hangars and sketched of the proposed de-paint and paint control panel layouts.

6.2.1.7 Catalog Cuts. Brief description of various items of equipment, including catalog cuts. Catalog cuts are used to establish a level of quality and become a contractual obligation upon contract award. Only one catalog cut sheet will be submitted for each piece of equipment. Manufacturers, level of quality, warranties, etc. are more important to the evaluators than selections of specific sizes or capacities.

6.2.1.8 Specifications. List of specifications to be used.

6.2.1.9 Plumbing Narrative. Provide a brief description of miscellaneous systems such as compressed air (capacity, pressure, piping, location of air outlets, etc.), roof drainage, natural gas (pressure, quantity, and equipment to be served), and other special systems.

6.2.1.9.1 Specifications. The offeror shall provide a list of titles of specifications he proposes to use in the design, if section not provided in the RFP.

6.2.2 Deleted

6.2.3 Mechanical Drawings. Provide plan view showing the following:

6.2.3.1 Heating, Ventilating, and Air Conditioning Drawings. Heating, ventilating, and air conditioning equipment layout - chillers or refrigeration compressors, boilers, pumps, condensers or cooling tower, air handling units, fans, hoods, and other items of major equipment required for the facility. Show required maintenance clearances around the equipment that is being proposed.

6.2.3.2 Commissioning Plan. Provide a detailed narrative of the plan for commissioning, testing and balancing the airflow in the De-paint and Paint hangars.

6.3 ELECTRICAL DESIGN SUBMITTAL REQUIREMENTS.

6.3.1 Interior Electrical System Design Narrative. Provide an overview of the interior electrical design describing the major features of the power, lighting, communication and security systems.

6.3.2 Interior Lighting System. Provide an Interior Concept Lighting Schedule tabulating room names, fixture types, lighting intensities, and basis of design (e.g., IES criteria, RFP requirement). The schedule shall address all spaces.

6.3.3 Interior Lighting Fixture Catalog Cuts. Provide a single catalog cut sheet for each fixture type. This cut sheet shall be correlated to the Concept Lighting Schedule and shall establish the aesthetic, physical, functional and photometric characteristics of the fixture. Catalog cuts are used to establish a level of quality and become a contractual obligation upon contract award.

6.3.4 Interior Electrical Drawings. Provide lighting, power and signal plans for the facilities. The plans shall indicate locations of devices and fixtures only; no wiring shall be shown. Fixtures shall be marked to correlate to the Interior Concept Lighting Schedule.

6.3.5 Exterior Electrical Distribution System Design Narrative. Provide an overview of the exterior electrical design describing the major features of the power, lighting and communication systems.

6.3.6 Exterior Electrical Equipment Catalog Cuts. Provide catalog cuts of electrical distribution equipment. Only one catalog cut sheet will be submitted for each piece of equipment. Catalog cuts are used to establish a level of quality and become a contractual obligation upon contract award.

6.3.7 Exterior Electrical Drawings. Provide a separate electrical site plan indicating all existing to be removed, existing to remain, and new utility lines and equipment required to serve the project. Utility lines shown shall include electrical power lines, telephone and other communication lines. The plan shall also show all buildings, trees, roads and driveways, parking areas, and any other items necessary for functional and operating adequacy. Indicate the connection points and the approximate routing of lines through the site. Indicate the locations of transformers, switches and cable termination cabinets. Also indicate on the drawings the lighting fixture type proposed within each area (no layout is required).

6.3.8 Specifications. Provide a list of specifications proposed for use in the design but not included in the RFP.

6.3.9 Energy Conservation Design Narrative. Energy conservation measures shall be indicated. The narrative shall describe measures and techniques that are proposed in the electrical design that will conserve energy.

6.4 FIRE PROTECTION DESIGN SUBMITTAL REQUIREMENTS.

6.4.1 Fire Protection Narrative. A narrative will be provided addressing the following items for each building type in this project:

6.4.1.1 Automatic fire extinguishing systems and hose standpipe systems: Identification of all areas provided with sprinkler protection and the type of sprinkler system provided, sprinkler hazard classification for these areas, areas protected by other automatic suppression systems and the type system provided, and buildings provided with hose standpipe systems and the type of standpipe system provided and indication if fire pumps are required and where the pump will be located.

6.4.1.2 Credentials of Fire Protection Engineer. Provide the credentials of the fire protection engineer in the proposal submittal. The design of the fire protection features shall be by a qualified fire protection engineer meeting one of the following conditions: a.) An engineer with a Bachelor of Science or Masters of Science Degree in fire protection engineering from an accredited university engineering program, plus a minimum of 5 years' work experience in fire protection engineering. b.) A registered professional engineer who has passed the National Council of Examiners for Engineering and Surveys (NCEE) fire protection engineering written examination. c.) A registered P.E. in a related engineering discipline with a minimum of 5 years' experience dedicated to fire protection engineering.

6.4.1.3 Specifications. Provide a list of all UFGS guide specifications to be used.

6.5 EVALUATION FOR FACTOR 2-2 BUILDING SYSTEMS

This factor considers the materials, layout, maintainability, quality, durability, maintenance considerations, and any aspects of the proposed building systems and materials. Additional consideration will be given to all proposed systems or materials, which exceed the minimum requirements of the RFP. Offerors are encouraged to present energy, maintenance, and life cycle cost improvements, which will lead to the overall improvement in the final facilities, constructed. The following sub factors shall be considered in evaluating this factor. The levels of importance are as follows:

Sub factor 2-2a and 2-2b are equal and more important than sub factor 2-2c.

SUB FACTOR 2-2a. Building Heating, Ventilating, Air Conditioning, Plumbing Systems and Fire Protection Systems. Evaluate the heating, air conditioning, and ventilating systems proposed. Evaluation will concentrate on the proposed schematic drawing information presented, the design approach narratives, and the equipment and material catalog information included in the proposals. The systems proposed must meet the minimum requirements set out in the Statement of Work and shall represent systems which are fully integrated into the building structure and are fully capable of environmental control of the spaces. Systems serving the de-paint and paint hangars shall incorporate devices to adjust and balance the airflow at the supply and exhaust to provide uniform airflow across the cross section of the hangar. Within this sub factor, the automatic temperature controls will also be considered. Where addressed in the Statement of Work, the proposed automatic temperature controls systems proposed shall be 100% compatible and integrated into the existing Installation-Wide UMCS without translators or third party interface devices. Additional considerations will be given to proposals that incorporate energy recovery systems, high efficiency systems, energy conservation considerations, thermal storage systems, and other systems and features designed to enhance the overall performance of the facility while reducing the operating and maintenance costs expected. Evaluate the proposed fire suppression systems. Ensure that the design will be accomplished by a fire protection professional.

SUBFACTOR 2-2b. Building Structural Systems. Evaluate the structural systems and sub-systems proposed for installation in the facilities. While no detail drawings or calculations are required or desired, this sub factor will evaluate the narrative descriptions of the structural systems proposed. Consideration will be given to overall life cycle maintenance of the systems and also to considerations of materials selected with respect to the expected use. Additional considerations will be given to proposed systems with a long expected life (greater than 25 years) vs. a system requiring greater cyclical replacement.

SUBFACTOR 2-2c. Electrical Power, Lighting, Grounding, and Communications Systems. Evaluate the electrical power and lighting systems proposed for installation. Evaluation will concentrate on the proposed schematic drawing information presented, the design approach narratives, and the equipment and material catalog information included in the proposals. The systems proposed must meet the minimum requirements set forth in the Statement of Work and shall represent systems that are fully integrated into the building structure. Additional consideration will be given to proposals that incorporate energy saving materials or materials that represent a lower life cycle cost to the Base.

7. CONTRACTOR SUBMITTAL FOR TAB D FACTOR 2-3 EQUIPMENT

7.1 Equipment. This factor considers the equipment materials, layout, maintainability, quality, durability and maintenance considerations. The following information will be submitted:

7.2 Equipment Narrative. The RFP identifies process equipment to be used for the de-painting and painting of aircraft and provided by the contractor. Provide a narrative addressing all process equipment identified in the RFP for acquisition with this project and provided by the contractor. Address equipment compatibility within the facilities, and performance on a system level.

7.3 Catalog Cuts. Provide catalog cuts for each piece of equipment. Only one catalog cut sheet will be submitted for each piece of equipment. Catalog cuts are used to establish a level of quality and become a contractual obligation upon contract award. Manufacturers level of quality and warranties are important to the evaluators.

7.4 Equipment Drawings. Provide a 1/4 inch = 1 foot scale (1:50) plan showing equipment layout in the facilities. The drawings will show the location of trenches, platforms, pipes, compressors, etc.

7.5. EVALUATION OF FACTOR 2-3 EQUIPMENT:

This factor considers the equipment materials, layout, maintainability, quality, durability and maintenance considerations. Additional consideration will be given to all proposed equipment that exceeds the minimum requirements of the RFP. Offerors are encouraged to present energy and maintenance data.

FACTOR 2-3 Equipment. Evaluate the equipment proposed. Evaluation will concentrate on the proposed schematic drawing information presented, the design approach narratives, and the equipment and material catalog information included in the proposals. The equipment proposed must meet the minimum requirements set out in the Statement of Work. Additional considerations will be given to proposals that incorporate equipment quality and efficiency that enhances the overall performance of the equipment while reducing the operating and maintenance costs expected.

8. CONTRACTOR SUBMITTAL FOR TAB E – FACTOR 2-4 SITE DEVELOPMENT SUBMITTAL REQUIREMENTS. The site development portion of the proposal must outline the proposed site demolition, layout, grading, storm drainage, and erosion control practices of design and construction. A topographic survey will be provided at Phase II to the Offerors in Metric units. The proposal shall include the following:

8.1 General Site Development Narrative State the purpose, functional layout of all major structures in relation to aircraft apron, aircraft parking, vehicle parking and access drives, the extent of grading and drainage system, as well as erosion control measures in sufficient detail to delineate and characterize functional features and the desired image or visual appearance of this project. The narrative shall reflect setbacks requirements as indicated in the statement of work, as well as the visual characteristics of the surrounding topography. Include a statement addressing Force Protection Compliance. Also include a statement of any requirements for traffic control signals and signage plans. Provide a brief statement of the exterior construction materials to be used in the project.
Provide a description of the utility systems chosen.

8.2 Design Calculations.

8.2.1 Storm drainage pipe design calculations shall not be required for the proposal submittal. Storm drainage pipe design calculations for the final design submittal shall show that the pipes are adequately sized using the Rational Method in accordance with technical instructions.

8.3 Outline Specifications. Provide a list of titles of specifications proposed for use in the design, if the section is not provided in this RFP.

8.4 Site Development Drawings. Drawings shall be shown at 1 in = 30ft scale (or 1:400 in Metric units). All drawings shall have a Legend, North Arrow, and graphic bar scales. Drawings shall be provided in sufficient detail and annotated so that Government may visualize how the designer has interpreted the user's functional and operational requirements in his proposal for final design. Drawings shall include, the following:

8.4.1 Demolition Plan. The plan shall show all demolition.

8.4.2 Layout Plan. This plan should show the building layout in relation to aircraft aprons, parking areas, access drives, and pedestrian walkways. This plan should show overall dimensions of parking lots, aircraft parking aprons and striping modifications, minimum building setbacks (in compliance with Force Protection), minimum setback from Streets or Roads and utility pad locations (this includes dumpster, electrical and mechanical equipment pads). The Layout Plan will also show location of sidewalks, access drives, retaining walls, fencing, site steps, service vehicle drives, handicap parking spaces, and curb and gutter. The use of patterning shall be required to distinguish between concrete pavement and bituminous asphalt pavement. The submitted layout plan shall also show dimensions of major items such as building, parking lot rather than coordinates of corner points.

8.4.3 Grading and Drainage Plan. This Plan should show contour elevations at 1-foot (250mm) minimum interval and critical spot elevations, as well as finish floor elevations. This plan should also show the locations of storm inlets, curb inlets, manholes, storm drainage pipes, culverts, headwalls, storm water control structure, detention pond area, and drainage ditches. Drainage ditches shall be kept to a minimum due to the highly erodable soil. Curb cuts for drainage of parking lots and access drives are prohibited.

8.4.4 Site Utility Plan. Indicate locations of outside utilities where required to support the project. Show same scale as other site work drawings. The plan shall include a general utility layout with connection points, valve fittings and requirements for pneumatic ejector, sewage pumps and sump pumps and the relative placement of water and sanitary sewer systems. The layout plans should take into account the ease of maintenance and utility corridors.

8.5. EVALUATION OF FACTOR 2-4 SITE DEVELOPMENT

This factor considers the layout and planning of the site and various specialties that comprise a good site development plan. All elements of site design will be considered in this factor, with the exception of the design and materials utilized for utility systems that will be evaluated under a different factor. The following sub factors shall be considered in evaluating this factor. The levels of importance are as follows:

Sub factor 2-4a is more important than Sub factors 2-4b and 2-4c.

Sub factor 2-4b and 2-4c are equal in weight.

SUB FACTOR 2-4a. Area Development Plan. This sub factor evaluates the overall development concept proposed in the Offeror's plan with respect to the placement and orientation of the facilities, parking areas, pedestrian ways, site lighting, and other aspects which comprise the overall site development. Proposals that reflect the design intent and direction as outlined in the Statement of Work will receive the most consideration during the evaluation process.

SUBFACTOR 2-4b. Force Protection Considerations. This sub factor evaluates the inclusion of the site restraints imposed by the Force Protection requirements in the Statement of Work into the Offeror's proposal. The proposal must address this sub factor specifically. If a proposal is rated "unsatisfactory" in this sub factor the proposal may be eliminated from further consideration.

SUBFACTOR 2-4c. Site Utilities. This factor evaluates the technical performance of the proposed site utility and exterior utility distribution systems. The quality of the proposed design as well as the materials selected will be considered in this item. Emphasis will be placed on durability, corrosion resistance, ease of maintenance, and life cycle cost of materials selected. Consideration will be given to the suitability of the chosen materials for the site soil conditions present. Site engineering will consider all aspects of the proposal beyond the 5-ft line from all new facilities.

9. CONTRACTOR SUBMITTALS FOR TAB F SUBFACTOR 2-5 OFFEROR MANAGEMENT PLANS AND SCHEDULES

9.1 SUB-FACTOR 2-4a - PROJECT KEY PERSONNEL

9.1.1 Provide the names, resumes, and levels of responsibility of the principal managers and technical personnel who will be directly responsible for the day-to-day design and construction activities. Include, as a minimum the following:

Project Manager

Project Architect

Project Mechanical Engineer

Project Electrical Engineer

Construction Manager

Construction Quality Control Manager

Design Quality control Manager

9.1.2 Indicate whether each individual has had a significant part in any of the project examples cited. If reassignment of personnel is considered possible, provide the names and resumes of the alternative professionals in each assignment.

9.1.3 Provide a narrative and/or diagram that outline the relationships and interaction between each of the key personnel above.

9.1.4 Provide a narrative of any past successes of partnering with the government.

9.1.5 Project key personnel shall include the key construction subcontractors and the extent of their role with respect to the design phases of this project. For each subcontractor, the prime contractor's experience working with that sub should be indicated and the subs past experience in work similar in nature to the project being evaluated should be submitted. Only one subcontractor will be identified for each major portion of work. Key subcontractors shall include, but are not limited to:

Metal building subcontractor(s)

Concrete subcontractor(s)

Mechanical subcontractor(s)

Site Development subcontractor(s).

Electrical Subcontractor (s)

Note: To change those subcontractor(s) and key personnel identified by the offeror will require the agreement of the government.

9.2 SUBFACTOR 2-5 b. Schedule.

9.2.1 Integrated Design and Construction Schedule with all areas clearly identified. The schedule for design and construction shall be task oriented, indicating dates by which milestones are to be achieved. The offeror may use a critical path or other method of his/her choice; however, the schedules shall be graphically represented. The total duration of the contract will not exceed 1470 days for the Base Bid plus Option 2 and 1650 days for the Base Bid plus All Options. Clearly indicate the total duration of the contract, in days, on the schedule for the Base Bid plus Option 2 and for the Base Bid plus All Options. Assume a Notice To Proceed date of 15 October 2003.

9.2.2. The offeror shall also submit a narrative explaining how the schedules will be achieved.

9.3. SUBFACTOR 2-5c SMALL AND DISADVANTAGED BUSINESS UTILIZATION

9.3.1 Offers from large business are required to provide a narrative discussion of their plan for utilization of small and small disadvantaged businesses. At a minimum, the narrative shall discuss:

Goals for subcontracting with small and small disadvantaged businesses in sufficient detail to allow Government evaluators to determine that these goals are realistic, justifiable, positive, and in accordance with the Government's policy to maximize opportunities for these types of businesses.

The extent to which small disadvantaged businesses, and where appropriate, historically black colleges and universities/minority institutions (HBCU/MI) have been identified for participation as part of the Offeror's team.

The Offeror's past and present commitment to providing subcontracting opportunities and encouragement to small and small disadvantaged businesses.

9.3.1.1 For Offerors information the following are the U.S. Army Corps of Engineers Subcontracting Targets for FY03:

57.2% of planned subcontracting dollars placed with Small business concerns

8.9% of planned subcontracting dollars placed with Small Disadvantaged business concerns

3% of planned subcontracting dollars placed with HubZone small business concerns

8.1% of planned subcontracting dollars placed with Women owned small business concerns

3% of planned subcontracting dollars placed with Service-Disabled Veteran-owned small business concerns

9.4 EVALUATION OF FACTOR 2-5 MANAGEMENT PLANS AND SCHEDULES

This factor evaluates the Offeror’s Project Management Plans as well as the proposed schedule for completion of the entire design-build project. Through this factor the Government will evaluate the Offeror’s understanding of the solicitation provisions with respect to an integrated design-build process and the associated quality control, scheduling, coordination, and contract close out provisions.

Sub factors 2-5a Key Personnel and 2-5b Schedule are equal in importance and each is more important than Sub factor 2-5c Management Plans and Schedules.

9.4.1 EVALUATION OF SUBFACTOR 2-5a PROJECT KEY PERSONNEL

The Government will evaluate and rate the Key Personnel identified. The resumes and levels of responsibility of the principal managers and technical personnel who will be directly responsible for the day-to-day design and construction activities will be evaluated. Data should indicate whether each individual has had a significant part in any of the project examples cited. If reassignment of personnel is considered possible, the names and resumes of the alternative professionals for each assignment will be evaluated. Additional consideration will be given to individuals who have past experience with Corps of Engineers construction project operations and who have completed the Corps sponsored Quality Control Class.

9.4.2 EVALUATION OF SUBFACTOR 2-5b SCHEDULE

The schedule will be evaluated to assess the inclusion of “fast tracking” and the rationale of how the Offeror intends to comply with the submitted schedule. The schedule must reflect a single task oriented structure for both design and construction. The schedule will be reviewed for completeness and the inclusion of milestones. A schedule that improves on the Government supplied maximum durations will be considered more favorably during the evaluation.

9.4.3 EVALUATION OF SUB FACTOR 2-5c SMALL BUSINESS UTILIZATION

The Government will evaluate narratives provided for the following elements. Greater detail and specificity will be given greater credit than general statements and commitments:

The extent to which the goals for subcontracting with small and small disadvantaged businesses are realistic, justifiable, positive, and in accordance with the Government's policy to maximize opportunities for these types of businesses.

The extent to which small disadvantaged businesses, and where appropriate, historically black colleges and universities/minority institutions (HBCU/MI) have been identified for participation as part of the Offeror's team.

The Offeror's past commitment to providing subcontracting opportunities and encouragement to small and small disadvantaged businesses.

PROPOSAL DATA SHEET – PHASE 1

NOTE TO OFFERORS
This OFFEROR PERFORMANCE CAPABILITY PROPOSAL DATA SHEET must be completed and attached as the first page of the body of your proposal. The information required by this data sheet may be completed directly on this form or attached to the form as supplemental data sheets.

1. NAME OF OFFEROR.

Name of Offeror(s):

If a joint venture or contractor-subcontractor association of firms, list the individual firms and briefly describe the nature of the association.

Firm 1:

Firm 2:

Nature of Association:

2. DUNS NUMBER AND CCASS IDENTIFICATION NUMBER FOR OFFEROR
(If more than one DUNS number is to be considered explain affiliation to offeror)

3. ACASS IDENTIFICATION NUMBER FOR DESIGN FIRM

4.AUTHORIZED NEGOTIATORS.

The offeror represents that the following persons are authorized to negotiate on its behalf with the Government in connection with this Request for Proposals (RFP).

[List names, titles, and telephone number of the authorized negotiator.]

Name of Person Authorized to Negotiate:

Negotiator's Address:

Negotiator's Telephone:

5. PAST PERFORMANCE PROJECTS.

5.1 Provide information for three completed or substantially completed projects that are being or have been constructed by the Offeror to be used for reference and evaluation purposes. These should be the same projects for which Past Performance Questionnaires have been provided to the Procurement Point of Contact.

5.2 If the offeror is made up of separate design and construction companies that have combined for this project, then this item must be completed twice (once for each company), for a total of six projects.

5.3 For each project provide the information shown. Failure to provide this minimum information may result in lower ratings.

6. LIQUIDATED DAMAGES. On an attached sheet, list any projects within the last five years that have been assessed liquidated damages. Provide an explanation.

7. TERMINATED PROJECTS. On an attached sheet, list any projects within the last five years that have been terminated. Provide an explanation.

8. GOVERNMENT PROJECTS. On an attached sheet, list all contracts with the Government within the last five years. Indicate Government contract number and contracting agency (with contact names and telephone numbers).

9. CADD CAPABILITIES. On an attached sheet, describe your office capabilities for using CADD (Computer Aided Design and Drafting) and other forms of automation on this project. This information shall be limited to two 8 ½ by 11 sheets of paper, double spaced, 12 pitch font.

SAMPLE

FACTOR 1-1 PAST PERFORMANCE INFORMATION
(Offerors should submit for at least three projects)

Project Title:

Location:

Contract number:

Procuring activity:

Procurement point of contact and telephone number:

List date of construction completion or percent completion if construction is underway:

Address of building(s):

Address and telephone number of owner:

Indicate type of project (private sector, Government, planned unit development, etc.):

General character:

Total cost:

Total cost of all modifications:

SAMPLE

FACTOR 1-3 CORPORATE RELEVANT SPECIALIZED EXPERIENCE.

Project Title:

Location:

Contract number:

Nature of involvement in this project, i.e. General Contractor, subcontractor, designer:

Procuring activity:

Procurement point of contact and telephone number:

List date of construction completion or percent completion if construction is underway:

Address of building(s):

Address and telephone number of owner:

Indicate type of project (private sector, Government, planned unit development, etc.):

General character:

Total cost:

SAMPLE TRANSMITTAL LETTER
AND
PAST PERFORMANCE EVALUATION QUESTIONNAIRE

Date: _____

To: _____
_____
_____

We have listed your firm as a reference for work we have performed for you as listed below. Our firm has submitted a proposal under a project advertised by the U.S. Army Corps of Engineers, Savannah District: **Corrosion Control De-Paint, FY 03, L.I. UHHZ003014 and Paint, FY 04, L.I. UHHZ003011 Facilities, Robins Air Force Base Georgia.** In accordance with Federal Acquisition Regulations (FAR), an evaluation of our firm's past performance will be completed by the Corps of Engineers. Your candid response to the attached questionnaire will assist the evaluation team in this process.

We understand that you have a busy schedule and your participation in this evaluation is greatly appreciated. Please complete the enclosed questionnaire as thoroughly as possible. Space is provided for comments. Understand that while the responses to this questionnaire may be released to the offeror, FAR 15.306 (e)(4) prohibits the release of the names of the persons providing the responses. Complete confidentiality will be maintained. Furthermore, a questionnaire has also been sent to _____ of your organization. Only one response from each office is required. If at all possible, we suggest that you individually answer this questionnaire and then coordinate your responses with that of _____, to forge a consensus on one overall response from your organization.

Please send your completed questionnaire to the following address to arrive NOT LATER THAN March *28*, *2003*:

U.S. Army Engineer District, Savannah
Contracting Division (CESAS-CT-C)
ATTN: Mary Corbin
100 W. Oglethorpe Ave.
Savannah, GA 31402

The questionnaires can also be emailed to mary.m.corbin@sas02.usace.army.mil. If you have questions regarding the attached questionnaire, or require assistance, please contact Mary Corbin at 912-652-5289. Thank you for your assistance.

PAST PERFORMANCE EVALUATION QUESTIONNAIRE

Upon completion of this form, please send directly to the U.S. Army Corps of Engineers in the enclosed addressed envelope or email to mary.m.corbin@sas02.usace.army.mil. Do not return this form to our offices. Thank you.

1. Contractor/Name & Address (City and State):

2. Type of Contract: Fixed Price _____ Cost Reimbursement _____
Other (Specify) _____Award Amount $_____

3. Title of Project/Contract Number:
_____
_____
_____

4. Description of Work: (Attach additional pages as necessary)

5. Complexity of Work: High _____ Mid _____ Routine _____

6. Location of Work: _____

7. Date of Award: _____

8. Status: Active _____ (provide percent complete)

Complete _____ (provide completion date)

9. Name, address and telephone number of person completing this questionnaire:

10. QUALITY OF CONSTRUCTION:

Evaluate the contractor's performance in complying with contract requirements, quality achieved and overall technical expertise demonstrated. In order to use this questionnaire as a viable evaluation tool, please provide remarks to substantiate your ratings.

Outstanding Quality	
Above Average Quality	
Satisfactory Quality	
Marginal Quality	
Unsatisfactory or Experienced Significant Quality Problems	

Remarks: _____

_____

_____

_____

11. TIMELINESS OF PERFORMANCE:

To what extent did the contractor meet the contract and/or individual task order schedules if the contract was an indefinite delivery type contract?

Completed Substantially Ahead of Schedule (Outstanding)	
Completed Ahead of Schedule (Above Average)	
Completed on Schedule with Minor Delays Under Extenuating Circumstances (Satisfactory)	
Completed Behind Schedule (Marginal)	
Experienced Significant Delays without Justification (Unsatisfactory)	

Remarks: _____

_____

_____

12. CUSTOMER SATISFACTION:

To what extent were the end users satisfied with the completed project:

Exceptionally Satisfied (Outstanding)	
Highly Satisfied (Above Average)	
Satisfied (Satisfactory)	
Somewhat Dissatisfied (Marginal)	
Highly Dissatisfied (Unsatisfactory)	

Remarks:

_____

_____

_____

13. SUBCONTRACTOR MANAGEMENT:

Evaluate the contractor's performance for management of the subcontractors:

Exceptionally Satisfied with Contractors Management Techniques (Outstanding)	
Highly Satisfied with Contractors Management Techniques (Above Average)	
Satisfied with Contractors Management Techniques (Satisfactory)	
Somewhat Dissatisfied with Contractors Management Techniques (Marginal)	
Highly Dissatisfied with Contractors Management Techniques (Unsatisfactory)	

Remarks:

_____

_____

_____

14. If given the opportunity, would you work with this contractor again?

Yes _____ No _____ Not Sure _____

Remarks:

_____

_____

_____

_____

_____

15. OTHER REMARKS:

Use the space below to provide other information related to the contractor's performance. This may include the contractor's selection and management of subcontractors, flexibility in dealing with contract challenges, their overall concern for the Government's interest (if applicable), project awards received, etc.

_____

_____

_____

_____

_____

_____

_____

_____

PHASE 1 EVALUATION MANUAL

1. GENERAL

The purpose of this document is to establish a uniform evaluation procedure for Phase 1 of the solicitation based on contractually defined criteria. The Evaluation Team will evaluate each proposal individually using the qualitative/quantitative procedures which follow. Each proposal will be reviewed and rated by each of the evaluators. During this process, discrepancies between evaluations will be discussed and resolved within the team. Following the completion of the individual evaluations, a consensus evaluation will be derived. The results of this consensus evaluation will be documented and presented to the Contracting Officer/Source Selection Authority for determination of which proposals proceed into Phase 2 of the solicitation process.

2. PROPOSAL REQUIREMENTS

2.1 Proposal Submission Requirements and Instructions identifies all the necessary submittal information to be included in the proposals. Proposals which reach the evaluation stage have passed an initial Contracting Division review to assure that they are complete and responsive. All proposals which are provided to the evaluation team will be evaluated and rated.

2.2 Past Performance Questionnaires. Each Offeror has been requested to have at least three questionnaires from previous projects completed and forwarded directly to the Savannah District for use by the evaluation team in past performance evaluation and risk analysis. The Government may contact the points of contact indicated on these questionnaires for additional information and to assure validity of the information received. The Government may contact sources other than those provided by the Offeror for information with respect to past performance. These other sources may include ACASS (Architect-Engineer Contract Administration Support System), CCASS (Construction Contractor Appraisal Support System), telephone interviews, and Government personnel with personal knowledge of the Offeror's performance capability. If more than three questionnaires are returned, the evaluation team shall evaluate all questionnaires. If less than three questionnaires are returned, the proposal shall receive a rating commensurate with the contractor's performance risk as determined by the evaluation team.

3. INDIVIDUAL PROPOSAL RATING WORKSHEETS

3.1 Worksheets are provided on the following pages that the evaluators will use to review and rate the individual proposals.

3.2 Comments are required to support all ratings.

4. RATING METHODOLOGY

4.1 Proposals will be evaluated in each Evaluation Factor based on the following rating scheme:

RATING	EXPLANATION
Outstanding/Very Low Performance Risk	Based on the Offeror's Phase One Submittal, no doubt exists that the Offeror will successfully perform the required effort.
Above Average/Low Performance Risk	Based on the Offeror's Phase One Submittal, little doubt exists that the Offeror will successfully perform the required effort.
Satisfactory/Moderate Performance Risk	Based on the Offeror's Phase One Submittal, some doubt exists that the Offeror will successfully perform the required effort. Normal contractor emphasis should preclude any problems.
Marginal/High Performance Risk	Based on the Offeror's Phase One Submittal, substantial doubt exists that the Offeror will successfully perform the required effort.
Unsatisfactory/Unacceptable Performance Risk	Based on the Offeror's Phase One Submittal, extreme doubt exists that the Offeror will successfully perform the required effort.

4.2 Yes - No Ratings. Where the specific evaluation sheets indicate a YES – NO Rating these items shall be treated as information items. They are included in the evaluation worksheets to assure a similar focus among the evaluators and to ensure that individual evaluators do not overlook proposal information provided.

4.2.1 GO - NO GO Ratings. **GO**. The technical proposal conforms completely to the solicitation requirements and presents low risk to the Government. **NO-GO**. The proposal does not meet the minimum levels of acceptability and presents an unacceptably high risk to the Government.

4.3 Weighting of Factors. Relative Importance Definitions: For the purpose of this evaluation, the following terms will be used to establish the relative importance of the factors and subfactors:

Significantly More Important*:* The criterion is at least two times greater in value than another criterion.

More Important: The criterion is greater in value than another criterion but less than two times greater.

Equal: The criterion is of the same value or nearly the same as another criterion.

4.4 Factor Relative Weights. Factor 1-1 Past Performance, Factor 1-2 Technical Approach Narrative and Factor 1-3 Corporate Relevant Specialized Experience are considered equal in value.

5. OVERALL PROPOSAL RATING

5.1 Each member of the Government evaluation team will independently will consider all information

provided in the Phase 1 proposal. Once these individual analyses are completed, the team will meet and determine a rating for each of the evaluation factors for Phase 1 by consensus decision.

5.2 Following completion of the consensus rating, each proposal will be assigned a single overall adjectival rating. This final overall rating, along with ratings on individual factors, will be provided to the Contracting Officer/Source Selection Authority and used in making the determination of which Offerors will proceed to Phase 2 of the solicitation. In no case will more than three (3) proposals be included in the Phase 2 process.

5.3 No proposals which receive an overall rating of Unsatisfactory or Marginal will be forwarded to Phase 2 regardless of the total number of proposals received.

5.4 It is the responsibility of the evaluation team to provide and document sufficient strengths, weaknesses, and omissions to support the assigned rating for each factor as well as the overall Phase 1 rating. Comments are required for all ratings.

Offeror: _____

Evaluator:_____

Factor 1-1 Summary and Overall Rating

Item No.	Description	Rating
1.	Were three Past Performance Questionnaires Received?	YES/NO
2.	Do All the Questionnaires Received Reflect Projects Completed Within the Last 5 Years?	YES/NO
3.	Were ACASS/CCASS Ratings available?	YES/NO
4.	Do you have any Personal Experience with the Offeror?	YES/NO
5.	PAST PERFORMANCE	
OVERALL FACTOR 1-1 RATING		

Elements to be addressed when evaluating Past Performance are: Quality of Construction, Timeliness of Performance, Documentation, Customer Satisfaction and Subcontractor Management.

Strengths.

Weaknesses.

Other.

Offeror: _____

Evaluator:_____

Factor 1-2 Summary and Overall Rating

Item No.	Description	Rating
1.	Was Technical Approach Narrative Included in Proposal?	YES – NO
2.	Technical Approach	
OVERALL FACTOR 1-2 RATING		

Elements to be addressed when evaluating the Technical Approach Narrative are: Does the offeror have an understanding of the two-phase design-build process; Are the Roles and Responsibilities of the subcontractors for design, construction and equipment acquisition addressed; does the narrative address continuation of the design phase incorporating user comments and reviews in the process; does the narrative address the Design Quality Control Program; Is the design team involved throughout the construction period; Are construction subcontractors integrated into the design process; does the narrative address processes for handling construction, design and equipment acquisition problems; does the offeror propose to fast track and if so, does the narrative adequately address the implementation of fast track.

Strengths.

Weaknesses.

Other.

Offeror: _____

Evaluator:_____

Factor 1-3 Summary and Overall Rating

OFFEROR RELEVANT EXPERIENCE

Item No.	Description	Rating
1.	Were at least three example projects provided.	YES – NO
2.	Were the projects completed w/in the last 5 years	YES-NO
3.	Offeror's Relevant Experience	
OVERALL FACTOR 1-3 RATING		

Elements to be addressed when evaluating relevant experience are: Are the example projects provided similar in size, scope and complexity; do the example projects contain phasing of work; does the offeror have experience with military construction projects similar ins size and complexity.

Strengths.

Weaknesses.

Other.

Offeror: _____

Evaluator:_____

Phase 1 Summary and Overall Rating

Item No.	Description	Rating
1.	Factor 1-1 Offeror Past Performance	
2.	Factor 1-2 Technical Approach Narrative	
3.	Factor 1-3 Offeror Relevant Experience	
OVERALL PHASE 1 RATING		

_____
Board Member

Offeror: _____

PHASE 1 SOURCE SELECTION BOARD SUMMARY RATINGS

FACTOR No.	Description	Board Member 1	Board Member 2	Board Member 3	Board Member 4	Board Member 5	CONSENSUS
1-1	**Offeror Past Performance**						
1-2	**Technical Approach Narrative**						
1-3	**Offeror Relevant Experience**						
OVERALL PHASE 1 RATING							

_____ _____
Board Member 1 Board Member 2

_____ _____
Board Member 3 Board Member 4

_____ _____
Board Member 5 Board Chairperson

PHASE 2 EVALUATION MANUAL

1. GENERAL. The purpose of this document is to establish a uniform evaluation procedure for Phase 2 of the solicitation based on contractually defined criteria. This process will be an extension of the Phase 1 evaluation process. The Evaluation Team will evaluate each proposal individually using the qualitative/quantitative procedures that follow. Each proposal will be reviewed and rated by each of the evaluators. During this process, discrepancies between evaluations will be discussed and resolved within the team. Following the completion of the individual evaluations, a consensus evaluation will be derived. The results of this consensus evaluation will be used to set the competitive range for the purposes of discussions and as the basis for the best value decision by the Contracting Officer/ Source Selection Authority.

2. PROPOSAL REQUIREMENTS. Proposal Submission Requirements and Instructions located in Section 00100 identifies all the necessary submittal information to be included in the proposals. Proposals that reach the evaluation stage have passed an initial Contracting Division review to assure that they are complete and responsive. All proposals that are provided to the evaluation team will be evaluated and rated.

3. INDIVIDUAL PROPOSAL RATING WORKSHEETS

3.1 Worksheets are provided on the following pages that the evaluators will use to review and rate the individual proposals.

3.2 Comments are required to support all ratings.

4. RATING METHODOLOGY

4.1 **General.** The proposals from the Offerors who reach Phase 2 will be evaluated by a team to determine compliance with this solicitation (as a minimum), and to evaluate the quality of the proposed materials, methods, and procedures. Each of the evaluation Factors for Phase 2 will be evaluated by the Government and a final overall rating for the proposals will be determined by consensus of the Government evaluation team. Evaluation criteria (factors and sub-factors) will be rated using the following adjectival descriptions. Evaluators will apply the appropriate adjective to each criterion rated. The evaluator's narrative explanation must clearly establish that the Offeror's submittal meets the definitions established below:

> **OUTSTANDING:** Information submitted in the proposal demonstrates the Offeror's potential to significantly exceed performance or capability standards identified in the solicitation. The Offeror has clearly demonstrated an understanding of all aspects of the requirements to the extent that timely and highest quality performance is anticipated and risk to the Government is very low. The Offeror has convincingly demonstrated that the RFP requirements have been analyzed, evaluated, and synthesized into approaches, plans, and techniques that, when implemented, should result in outstanding, effective, efficient, and economical performance under the contract. An assigned rating within "outstanding" indicates that, in terms of the specific factor (or sub-factor), the submittal contains essentially no significant weaknesses, deficiencies or disadvantages. The proposal has exceptional strengths that will significantly benefit the Government. The proposal exceeds an "Above Average" rating. **The proposal significantly exceeds most or all solicitation requirements. The proposal presents very low risk to the Government.**
>
> **ABOVE AVERAGE -** Information submitted in the proposal demonstrates the Offeror's potential to exceed performance or capability standards. The proposal has one or more strengths that will benefit the Government. The areas in which the Offeror exceeds the requirements are anticipated to result in a high level of efficiency or productivity or quality. An assigned rating within "Above Average" indicates that, in terms of the specific factor (or sub-factor), any deficiencies noted are of a minor nature that should not seriously

affect the Offeror's performance. The submittal demonstrates that the requirements of the RFP are well understood and the approach will likely result in a high quality of performance which represents low risk to the Government. A rating within "Above Average" is used when there are no indications of exceptional features or innovations that could prove to be beneficial, or contrarily, weaknesses that could diminish the quality of the effort or increase the risk of failure. Disadvantages are minimal. The submittal contains excellent features that will likely produce results very beneficial to the Government. Response exceeds a "Satisfactory" rating. **The proposal fully meets all RFP requirements and significantly exceeds many of the RFP requirements. The proposal presents low risk to the Government.**

SATISFACTORY - Information submitted in the proposal demonstrates the Offeror's potential to meet performance or capability standards. The proposal presents an acceptable solution to the Government's requirements. The proposal meets minimum RFP requirements. Few or no advantages or strengths are presented. The Offeror's proposal contains weaknesses in several areas that are not offset by strengths in other areas. Complete and comprehensive proposal; exemplifies an understanding of the scope and depth of the task requirements and the Offeror's understanding of the Government's requirements. A rating of "Satisfactory" indicates that, in terms of the specific factor (or sub-factor), there is sufficient confidence that a fully compliant level of performance will be achieved with moderate risk to the Government. Response exceeds a "Marginal" rating. **No significant advantages or disadvantages. The proposal presents moderate risk to the Government.**

MARGINAL - Information submitted in the proposal demonstrates the Offeror's potential to marginally meet performance or capability standards necessary for minimal, but still acceptable contract performance. The proposal is not adequately responsive or does not address the specific factor(s) (or sub-factor(s)). The Offeror's interpretation of the Government's requirements is so superficial, incomplete, vague, incompatible, incomprehensible, or incorrect as to be unacceptable. The assignment of a rating within the bounds of "Marginal" indicates that the evaluator feels that mandatory corrective action would be required to prevent significant deficiencies from affecting the overall project. The Offeror's qualifications demonstrate an acceptable understanding of the requirements of the RFP and the approach will likely result in an adequate quality of performance, which represents a high level of risk to the Government. Low probability of success, although the proposal has a reasonable chance of becoming at least acceptable. Response exceeds an "Unsatisfactory" rating. **Significant disadvantages. Substantial doubt exists that the Offeror will successfully perform the required effort. The proposal presents high risk to the Government.**

UNSATISFACTORY - The proposal fails to demonstrate that it meets performance or capability standards required in the RFP. The proposal is unacceptable. Requirements can only be met with major changes to the proposal. The proposal does not meet the minimum requirements of the RFP. There is no reasonable expectation that acceptable performance would be achieved. The Offeror's proposal has many deficiencies and/or gross omissions; fails to provide a reasonable, logical approach to fulfilling much of the Government's requirements; or, fails to meet many of the minimum requirements. The Offeror's proposal is so unacceptable that they would have to be completely revised in order to make it acceptable. **Very significant disadvantages. Extreme doubt that the Offeror will perform the required effort. The proposal presents unacceptably high risk to the Government.**

4.2 YES – NO Ratings. Where the specific evaluation sheets indicate a YES – NO Rating these items shall be treated as information items. They are included in the evaluation worksheets to assure a similar focus among the evaluators and to ensure that individual evaluators do not overlook proposal information provided.

4.3 GO - NO GO Ratings. GO. The technical proposal conforms completely to the solicitation requirements and presents low risk to the Government. **N0-GO**. The proposal does not meet the minimum levels of acceptability and presents an unacceptably high risk to the Government.

4.4 Weighting of Factors. Relative Importance Definitions: For the purpose of this evaluation, the following terms will be used to establish the relative importance of the factors and sub-factors:

Significantly More Important*:* The criterion is at least two times greater in value than another criterion.

More Important: The criterion is greater in value than another criterion but less than two times greater.

Equal: The criterion is of the same value or nearly the same as another criterion.

4.5 Factor Relative Weights. The following factors will be evaluated and rated for each proposal:

TECHNICAL FACTORS when combined are more important than PRICE.

5. OVERALL PROPOSAL RATING

5.1 The intent of the evaluation worksheets that follow is to focus the evaluators on the key issues and concerns with respect to construction, operation, and function of the facilities. These worksheets are meant to stimulate thought and analysis and provide a framework in which to document concerns, strengths, weaknesses, and omissions. Evaluators are encouraged to document all observations and analyses when analyzing the individual proposals, and to share that analysis with the team during the consensus discussions.

5.2 It is the responsibility of the evaluation team to provide and document strengths, weaknesses, and omissions to support the assigned rating in each Factor as well as the overall Phase 2 rating. Comments are required for all ratings.

5.3 The Chairperson shall provide a copy of the Phase 1 ratings for each Offeror. The evaluation team, will then weigh the assigned ratings from Phase 1 and Phase 2, take into account the assembled strengths and weaknesses, and provide an overall proposal rating for each Offeror. During the consensus evaluation, a single “consensus rating” worksheet shall be completed for each proposal and signed by all the evaluators. It is imperative that all comments and supporting rational for the rating assigned be included on this consensus sheet. This final combined rating shall be used for comparison and in the trade off process as applicable.

5.4 Following the completion of the consensus discussions and rating assignments, the individual rating worksheets from each of the evaluators will be collected by the Chairperson and provided to the Contracting Officer. Each evaluator shall sign the final consensus rating sheet.

6. BASIS OF AWARD

6.1 In order to determine which proposal represents the best overall value, the Government will compare proposals to one another. The Government will award a firm fixed-price contract to that responsible Offeror whose submittal and price proposal contain the combination of those criteria described in this document offering the best overall value to the Government. Best value will be determined by a comparative assessment of proposals against all source selection criteria in this RFP.

6.2 The Government is concerned with striking the most advantageous balance between technical features and cost to the Government..

6.3 As technical ratings and relative advantages and disadvantages become less distinct, differences in price between proposals are of increased importance in determining the most advantageous proposal. Conversely, as differences in price become less distinct, differences in scoring and relative advantages and disadvantages between proposals are of increased importance to the determination.

6.4 The Government reserves the right to accept other than the lowest priced offer. The right is also reserved to reject any and all offers. The basis of award will be a conforming offer, the price or cost of which may or may not be the lowest. If other than the lowest offer, it must be sufficiently more advantageous than the lowest offer to justify the payment of additional amounts.

6.5 Offerors are reminded to include their best technical and price terms in their initial offer and not to automatically assume that they will have an opportunity to participate in discussions or be asked to submit a revised offer. The Government may make award of a conforming proposal without discussions, if deemed to be within the best interests of the Government.

Offeror: _____

Evaluator:_____

PROPOSAL RATING WORKSHEET

FACTOR 2-1
BUILDING FUNCTION AND AESTHETICS

General: In some areas the evaluators will be required to use subjective judgment based on experience and expertise to arrive at a rating adjective. In this most basic area the sub-factors are concerned with the "appeal" of the facility as well as its functionality in space arrangement and work/living space circulation patterns. This sub-factor will also consider the aesthetics of the interior and exterior of the proposed facilities. The last two sub-factors are GO/NO GO items. If either of these items is a "NO GO" rating, the entire factor (2-1) shall be rated as "UNSATISFACTORY".

Sub Factor 2-1a Functional Arrangement is more important than Sub Factor 2-1b Building Aesthetics

Elements to be addressed when evaluating Functional Arrangement are:

Does floor plan provide space arrangement suited to the mission of the facility?	Does floor plan meet the functional and spatial relationship requirements of the SOW?
Does the floor plan demonstrate compliance with the mandatory requirements for equipment and aircraft while allowing suitable space for circulation and other requirements?	Does the floor plan allow for suitable workflow and access necessary to operate the facility IAW its mission?
Does the floor plan allow aircraft to be backed into the hangers?	

/__ / Outstanding /__ / Above Average /__ / Satisfactory /__ / Marginal /__ / Unsatisfactory

Strengths.

Weaknesses.

Other Comments.

Offeror: _____

Evaluator:_____

PROPOSAL RATING WORKSHEET
BUILDING FUNCTION AND AESTHETICS
FACTOR 2-1
(Continued)

Sub Factor 2-1b Building Aesthetics

Elements to be addressed when evaluating Building Aesthetics are:

(1) Exterior Considerations:	Facades, roof lines, delineation of entrances. Proportions of fenestration in relation to elevations. Shadow effects, materials, and textures. Proportion and scale with in the structure. Compliance with Installation Design Guide. Conformance to adjacent structures/architectural styles. Exterior color schemes proposed. Other aesthetic considerations.
(2) Interior Considerations	Do the ceiling heights, hallway widths and other space sizes and configurations provide a workable solution to the facility mission? Does the interior design theme provide for an interesting attractive environment? Are the interior system and finishes suitable for use in an industrial facility? Are these systems suitable for a heavy usage environment?

/__ / Outstanding /__ / Above Average /__ / Satisfactory /__ / Marginal /__ / Unsatisfactory

Strengths.

Weaknesses.

Other Comments.

Offeror: _____

Evaluator:_____

PROPOSAL RATING WORKSHEET
BUILDING FUNCTION AND AESTHETICS
FACTOR 2-1
(Continued)

SUBFACTOR 2-1 c. Appropriate Facilities. From an overall perspective, does the proposal include all the required facilities as described in the Statement of Work? Insufficient information contained in the proposal to evaluate this item will be considered a "NO GO".

/__ / GO /__ / NO GO

Comments.

SUBFACTOR 2-1 d. Minimum Space and Facility Size. Does the proposal include all the mandatory in response to the requirements set forth in the statement of work? For each of the spaces with a minimum limitation, does the proposal comply with the requirements? Insufficient information contained in the proposal to evaluate this item will be considered a "NO GO".

/__ / GO /__ / NO GO

Comments.

Offeror: _____

Evaluator:_____

PROPOSAL RATING WORKSHEET

BUILDING SYSTEMS
FACTOR 2-2

SUBFACTOR 2-2a BUILDING HVAC, PLUMBING, AND FIRE PROTECTION

Sub-factors 2-2a and 2-2b are equal and more important than 2-2c.

Elements to be addressed when evaluating Building HVAC, Plumbing and Fire Protection are:

HVAC NARRATIVE	Does the narrative include design conditions used in calculations, description of piping systems, sketches, drawings and calculations showing that the proposed equipment will provide uniform cross flow ventilation. Does narrative address De-paint and Paint hangar devices to adjust and balance the airflow at the supply and exhaust to provide uniform airflow across the cross section of the hangar.
PLUMBING NARRATIVE	Does the narrative address miscellaneous systems such as compressed air (capacity, pressure, piping location of outlets etc) roof drainage, natural gas and other systems.
FIRE PROTECTION NARRATIVE	Does the narrative address automatic systems and hose standpipe systems. Does narrative identify all areas provided with sprinkler protection and the type of protection provided.

/__ / Outstanding /__ / Above Average /__ / Satisfactory /__ / Marginal /__ / Unsatisfactory

Strengths.

Weaknesses.

Other Comments.

Offeror: _____

Evaluator:_____

PROPOSAL RATING WORKSHEET
FACTOR 2-2 BUILDING SYSTEMS
SUBFACTOR 2-2 b BUILDING STRUCTURAL SYSTEMS

Elements to be addressed when evaluating Building Structural Systems are:

STRUCTURAL NARRATIVE	Does the narrative provide a general description of the scope of the project and all of the major structures. The overall building dimensions and principal features such as wall and roof construction proposed. A description of the framing system, lateral load resisting system and how loads will be transmitted to the foundations. Description on the structural framing deflection requirements that includes the teleplatform/crane loads, wind loads (lateral) etc. Anticipated foundations and a list of special design features including AT/FP requirements. Narrative should address fire resistance, and design analysis

/__ / Outstanding /__ / Above Average /__ / Satisfactory /__ / Marginal /__ / Unsatisfactory

Strengths.

Weaknesses.

Other Comments.

Offeror: _____

Evaluator:_____

PROPOSAL RATING WORKSHEET
FACTOR 2-2 BUILDING SYSTEMS
SUBFACTOR 2-2 c BUILDING ELECTRICAL POWER, LIGHTING, GROUNDING, AND COMMUNICATIONS SYSTEMS

Elements to be addressed when evaluating the Electrical System Narrative are:

ELECTRICAL SYSTEM NARRATIVE	Does the narrative provide an overview of the design describing major features of the power, lighting, communication and security systems both interior and exterior. Is there an Interior Concept Lighting Schedule, catalog cuts and drawings?

/__ / Outstanding /__ / Above Average /__ / Satisfactory /__ / Marginal /__ / Unsatisfactory

Strengths.

Weaknesses.

Other Comments.

Offeror: _____

Evaluator:_____

PROPOSAL RATING WORKSHEET
FACTOR 2-3 EQUIPMENT

Factors 2-1, 2-2 and 2-3 are equal and more important than factors 2-4 and 2-5. Factor 2-4 is more important than factor 2-5.

Elements to be addressed when evaluating Equipment are:

EQUIPMENT	Does the proposal contain a narrative, catalog cuts and drawings? Is the layout, maintainability, quality and durability of the equipment acceptable. Does the proposal incorporate equipment quality and efficiency that will enhance the overall performance of the equipment while reducing operating and maintenance cost?

/__ / Outstanding /__ / Above Average /__ / Satisfactory /__ / Marginal /__ / Unsatisfactory

Strengths

Weaknesses

Other

Offeror: _____

Evaluator:_____

PROPOSAL RATING WORKSHEET
FACTOR 2-4 SITE DESIGN CONSIDERATIONS
SUBFACTOR 2-4 a AREA DEVELOPMENT PLAN

Sub-factor 2-4a is more important than 2-4b and 2-4c. Sub-factors 2-4c and 2-4d are equal.

Elements to be addressed when evaluating Area Development plan are:

AREA DEVELOPMENT PLAN	Does the proposal reflect the design intent and direction as outlined in the Statement of Work?
	Does the plan show the functional layout of all major structures in relation to aircraft apron, aircraft parking, vehicle parking and access drives, in sufficient detail to delineate and characterize functional features and the desired image or visual appearance of this project

/__ / Outstanding /__ / Above Average /__ / Satisfactory /__ / Marginal /__ / Unsatisfactory

Strengths.

Weaknesses.

Other Comments.

Offeror: _____

Evaluator:_____

PROPOSAL RATING WORKSHEET
FACTOR 2-4 SITE DESIGN CONSIDERATIONS

SUBFACTOR 2-4 b FORCE PROTECTION CONSIDERATIONS

Elements to be addressed when evaluating Force Protection are:

FORCE PROTECTION	Does proposal comply with required force protection restraints, set back distances etc.

/__ / Outstanding /__ / Above Average /__ / Satisfactory /__ / Marginal /__ / Unsatisfactory

Strengths.

Weaknesses.

Other Comments.

Offeror: _____

Evaluator:_____

PROPOSAL RATING WORKSHEET
FACTOR 2-4 SITE DESIGN CONSIDERATIONS
SUBFACTOR 2-4 c SITE UTILITIES

Elements to be addressed when evaluating Site Utilities are:

SITE UTILITIES	Assess the quality of the proposed design as well as the materials selected. Does the proposal address durability, corrosion resistance, ease of maintenance, and life cycle cost of materials selected. Are the chosen materials suitable for the site soil conditions present?

/__ / Outstanding /__ / Above Average /__ / Satisfactory /__ / Marginal /__ / Unsatisfactory

Strengths.

Weaknesses.

Other Comments.

Offeror: _____

Evaluator:_____

PROPOSAL RATING WORKSHEET
FACTOR 2-5OFFEROR MANAGEMENT PLANS AND SCHEDULES
SUBFACTOR 2-5a – Key Personnel

Sub-factors 2-5a and 2-5b are equal and are more important than 2-5c.

Elements to be addressed when evaluating Key Personnel are:

KEY PERSONNEL	Does the proposal provide names, resumes and responsibilities of key personnel? Were any of the key personnel associated with the example projects provided? Are major subcontractors identified as well as their role in the design process. Is their any evidence of past successful partnering with the Government. Do any of the named individuals have past experience with Corps of Engineers construction project operations? Have any of the named individuals completed the Corps sponsored Quality Control Class.

/__ / Outstanding /__ / Above Average /__ / Satisfactory /__ / Marginal /__ / Unsatisfactory

Strengths.

Weaknesses.

Other Comments.

Offeror: _____

Evaluator:_____

PROPOSAL RATING WORKSHEET
FACTOR 2-5 OFFEROR MANAGEMENT PLANS AND SCHEDULES
(Continued)

SUBFACTOR 2-5 b. Schedule Information.

Elements to be addressed when evaluating Schedule Information are:

SCHEDULE INFORMATION	Does the schedule indicate use of "fast tracking" and if so does it provide the rationale of how the Offeror intends to comply with the submitted schedule? Does the schedule reflect a single task oriented structure for both design and construction? Is the schedule complete and does it include milestones. Does the schedule provide a shortened performance time for both scenarios?

/__ / Outstanding /__ / Above Average /__ / Satisfactory /__ / Marginal /__ / Unsatisfactory

Strengths.

Weaknesses.

Other Comments.

Offeror: _____

Evaluator:_____

PROPOSAL RATING WORKSHEET
FACTOR 2-5 OFFEROR MANAGEMENT PLANS AND SCHEDULES
(Continued)
SUBFACTOR 2-5 c Small and Small Disadvantaged Business Utilization.

Elements to be addressed when evaluating Small & Disadvantaged Business Utilization

SMALL AND SMALL DISADVANTAGED BUSINESS UTILIZATION	Is the narrative generic or project specific? Are the proposed goals realistic, justifiable and positive? Are small disadvantaged businesses, and where appropriate, historically black colleges and universities/minority institutions (HBCU/MI) identified for participation as part of the Offeror's team? Does the proposal address success/failure of past commitments.

/__ / Outstanding /__ / Above Average /__ / Satisfactory /__ / Marginal /__ / Unsatisfactory

Strengths.

Weaknesses.

Other Comments.

Offeror:_____

Evaluator:_____

INDIVIDUAL RATING SUMMARY		
Item No.	**Description**	**Rating**
1.	**Factor 2-1 Building Function and Aesthetics**	
	Subfactor 2-1 a Functional Arrangement	
	Subfactor 2-1 b Building Aesthetics	
	Subfactor 2-1 c Appropriate Facilities	
	Subfactor 2-1 d Minimum Space and Facility Size	
2.	**Factor 2-2 Building Systems**	
	Subfactor 2-2 a HVAC, Plunbing, Fire Protection	
	Subfactor 2-2 b Structural	
	Subfactor 2-2 c Electrical Power, Lighting, Grounding, Communications	
3.	**Factor 2-3 Equipment**	
4.	**Factor 2-4 Site Design**	
	Subfactor 2-4 a Area Development Plan	
	Subfactor 2-4 b Force Protection Considerations	
	Subfactor 2-4 c Site Utilities	
5.	**Factor 2-5 Offeror Management Plans and Schedules**	
	Subfactor 2-5 a Key Personnel	
	Subfactor 2-5 b Schedule Information	
	Subfactor 2-5 c Small and SDBusiness Utilization	
OVERALL PHASE 2 RATING		

CONSENSUS SUMMARY RATINGS						
FACTOR DESCRIPTION	**Board Member 1**	**Board Member 2**	**Board Member 3**	**Board Member 4**	**Board Member 5**	**CONSENSUS**
Factor 2-1 Building Function and Aesthetics						
Subfactor 2-1 a Functional Arrangement						
Subfactor 2-1 b Building Aesthetics						
Subfactor 2-1 c Appropriate Facilities						
Subfactor 2-1 d Minimum Space & Facility Size						
Factor 2-2 Building Systems						
Subfactor 2-2 a HVAC, Plunbing, Fire Protection						
Subfactor 2-2 b Structural						
Subfactor 2-2 c Electrical Power, Lighting, Grounding, Communications						
Factor 2-3 Equipment						
Factor 2-4 Site Design						
Subfactor 2-4 a Area Development Plan						
Subfactor 2-4 b Force Protection						
Subfactor 2-4 c Site Utilities						
Factor 2-5 Offeror Management Plans and Schedules						
Subfactor 2-5 a Key Personnel						
Subfactor 2-5 b Schedule Information						
Subfactor 2-5 c Small and SDB Utilization						
OVERALL PHASE 2 RATING						

CLAUSES INCORPORATED BY FULL TEXT

52.204-6 DATA UNIVERSAL NUMBERING SYSTEM (DUNS) NUMBER (JUN 99)

(a) The offeror shall enter, in the block with its name and address on the cover page of its offer, the annotation "DUNS" followed by the DUNS number that identifies the offeror's name and address exactly as stated in the offer.

(b) If the offeror does not have a DUNS number, it should contact Dun and Bradstreet directly to obtain one. A DUNS number will be provided immediately by telephone at no charge to the offeror. For information on obtaining a DUNS number, the offeror, if located within the United States, should call Dun and Bradstreet at 1-800-333-0505. The offeror should be prepared to provide the following information:

(1) Company name.

(2) Company address.

(3) Company telephone number.

(4) Line of business.

(5) Chief executive officer/key manager.

(6) Date the company was started.

(7) Number of people employed by the company.

(8) Company affiliation.

(c) Offerors located outside the United States may obtain the location and phone number of the local Dun and Bradstreet Information Services office from the Internet Home Page at http://www.customerservice@dnb.com. If an offeror is unable to locate a local service center, it may send an e-mail to Dun and Bradstreet at globalinfo@mail.dnb.com.

(End of provision)

52.211-2 AVAILABILITY OF SPECIFICATIONS LISTED IN THE DOD INDEX OF SPECIFICATIONS AND STANDARDS (DODISS) AND DESCRIPTIONS LISTED IN THE ACQUISITION MANAGEMENT SYSTEMS AND DATA REQUIREMENTS CONTROL LIST, DOD 5010.12-L (DEC 1999)

Copies of specifications, standards, and data item descriptions cited in this solicitation may be obtained--

(a) From the ASSIST database via the Internet at http://assist.daps.mil; or

(b) By submitting a request to the--Department of Defense Single Stock Point (DoDSSP), Building 4, Section D, 700 Robbins Avenue, Philadelphia, PA 19111-5094, Telephone (215) 697-2667/2179, Facsimile (215) 697-1462.

(End of provision)

52.211-14 NOTICE OF PRIORITY RATING FOR NATIONAL DEFENSE USE (SEP 1990)

Any contract awarded as a result of this solicitation will be DX rated order; X DO rated order certified for national defense use under the Defense Priorities and Allocations System (DPAS) (15 CFR 700), and the Contractor will be required to follow all of the requirements of this regulation. [Contracting Officer check appropriate box.]

(End of provision)

52.215-1 INSTRUCTIONS TO OFFERORS--COMPETITIVE ACQUISITION (MAY 2001)

(a) Definitions. As used in this provision--

“Discussions” are negotiations that occur after establishment of the competitive range that may, at the Contracting Officer's discretion, result in the offeror being allowed to revise its proposal.

“In writing or written” means any worded or numbered expression which can be read, reproduced, and later communicated, and includes electronically transmitted and stored information.

“Proposal modification” is a change made to a proposal before the solicitation's closing date and time, or made in response to an amendment, or made to correct a mistake at any time before award.

“Proposal revision” is a change to a proposal made after the solicitation closing date, at the request of or as allowed by a Contracting Officer as the result of negotiations.

“Time”, if stated as a number of days, is calculated using calendar days, unless otherwise specified, and will include Saturdays, Sundays, and legal holidays. However, if the last day falls on a Saturday, Sunday, or legal holiday, then the period shall include the next working day.

(b) Amendments to solicitations. If this solicitation is amended, all terms and conditions that are not amended remain unchanged. Offerors shall acknowledge receipt of any amendment to this solicitation by the date and time specified in the amendment(s).

(c) Submission, modification, revision, and withdrawal of proposals. (1) Unless other methods (e.g., electronic commerce or facsimile) are permitted in the solicitation, proposals and modifications to proposals shall be submitted in paper media in sealed envelopes or packages (i) addressed to the office specified in the solicitation, and (ii) showing the time and date specified for receipt, the solicitation number, and the name and address of the offeror. Offerors using commercial carriers should ensure that the proposal is marked on the outermost wrapper with the information in paragraphs (c)(1)(i) and (c)(1)(ii) of this provision.

(2) The first page of the proposal must show--

(i) The solicitation number;

(ii) The name, address, and telephone and facsimile numbers of the offeror (and electronic address if available);

(iii) A statement specifying the extent of agreement with all terms, conditions, and provisions included in the solicitation and agreement to furnish any or all items upon which prices are offered at the price set opposite each item;

(iv) Names, titles, and telephone and facsimile numbers (and electronic addresses if available) of persons authorized to negotiate on the offeror's behalf with the Government in connection with this solicitation; and

(v) Name, title, and signature of person authorized to sign the proposal. Proposals signed by an agent shall be accompanied by evidence of that agent's authority, unless that evidence has been previously furnished to the issuing office.

(3) Submission, modification, or revision, of proposals.

(i) Offerors are responsible for submitting proposals, and any modifications, or revisions, so as to reach the Government office designated in the solicitation by the time specified in the solicitation. If no time is specified in the solicitation, the time for receipt is 4:30 p.m., local time, for the designated Government office on the date that proposal or revision is due.

(ii)(A) Any proposal, modification, or revision received at the Government office designated in the solicitation after the exact time specified for receipt of offers is “late” and will not be considered unless it is received before award is made, the Contracting Officer determines that accepting the late offer would not unduly delay the acquisition; and--

(1) If it was transmitted through an electronic commerce method authorized by the solicitation, it was received at the initial point of entry to the Government infrastructure not later than 5:00 p.m. one working day prior to the date specified for receipt of proposals; or

(2) There is acceptable evidence to establish that it was received at the Government installation designated for receipt of offers and was under the Government's control prior to the time set for receipt of offers; or

(3) It is the only proposal received.

(B) However, a late modification of an otherwise successful proposal that makes its terms more favorable to the Government, will be considered at any time it is received and may be accepted.

(iii) Acceptable evidence to establish the time of receipt at the Government installation includes the time/date stamp of that installation on the proposal wrapper, other documentary evidence of receipt maintained by the installation, or oral testimony or statements of Government personnel.

(iv) If an emergency or unanticipated event interrupts normal Government processes so that proposals cannot be received at the office designated for receipt of proposals by the exact time specified in the solicitation, and urgent Government requirements preclude amendment of the solicitation, the time specified for receipt of proposals will be deemed to be extended to the same time of day specified in the solicitation on the first work day on which normal Government processes resume.

(v) Proposals may be withdrawn by written notice received at any time before award. Oral proposals in response to oral solicitations may be withdrawn orally. If the solicitation authorizes facsimile proposals, proposals may be withdrawn via facsimile received at any time before award, subject to the conditions specified in the provision at 52.215-5, Facsimile Proposals. Proposals may be withdrawn in person by an offeror or an authorized representative, if the identity of the person requesting withdrawal is established and the person signs a receipt for the proposal before award.

(4) Unless otherwise specified in the solicitation, the offeror may propose to provide any item or combination of

items.

(5) Offerors shall submit proposals in response to this solicitation in English, unless otherwise permitted by the solicitation, and in U.S. dollars, unless the provision at FAR 52.225-17, Evaluation of Foreign Currency Offers, is included in the solicitation.

(6) Offerors may submit modifications to their proposals at any time before the solicitation closing date and time, and may submit modifications in response to an amendment, or to correct a mistake at any time before award.

(7) Offerors may submit revised proposals only if requested or allowed by the Contracting Officer.

(8) Proposals may be withdrawn at any time before award. Withdrawals are effective upon receipt of notice by the Contracting Officer.

(d) Offer expiration date. Proposals in response to this solicitation will be valid for the number of days specified on the solicitation cover sheet (unless a different period is proposed by the offeror).

(e) Restriction on disclosure and use of data. Offerors that include in their proposals data that they do not want disclosed to the public for any purpose, or used by the Government except for evaluation purposes, shall--

(1) Mark the title page with the following legend: This proposal includes data that shall not be disclosed outside the Government and shall not be duplicated, used, or disclosed--in whole or in part--for any purpose other than to evaluate this proposal. If, however, a contract is awarded to this offeror as a result of--or in connection with-- the submission of this data, the Government shall have the right to duplicate, use, or disclose the data to the extent provided in the resulting contract. This restriction does not limit the Government's right to use information contained in this data if it is obtained from another source without restriction. The data subject to this restriction are contained in sheets [insert numbers or other identification of sheets]; and

(2) Mark each sheet of data it wishes to restrict with the following legend: Use or disclosure of data contained on this sheet is subject to the restriction on the title page of this proposal.

(f) Contract award. (1) The Government intends to award a contract or contracts resulting from this solicitation to the responsible offeror(s) whose proposal(s) represents the best value after evaluation in accordance with the factors and subfactors in the solicitation.

(2) The Government may reject any or all proposals if such action is in the Government's interest.

(3) The Government may waive informalities and minor irregularities in proposals received.

(4) The Government intends to evaluate proposals and award a contract without discussions with offerors (except clarifications as described in FAR 15.306(a)). Therefore, the offeror's initial proposal should contain the offeror's best terms from a cost or price and technical standpoint. The Government reserves the right to conduct discussions if the Contracting Officer later determines them to be necessary. If the Contracting Officer determines that the number of proposals that would otherwise be in the competitive range exceeds the number at which an efficient competition can be conducted, the Contracting Officer may limit the number of proposals in the competitive range to the greatest number that will permit an efficient competition among the most highly rated proposals.

(5) The Government reserves the right to make an award on any item for a quantity less than the quantity offered, at the unit cost or prices offered, unless the offeror specifies otherwise in the proposal.

(6) The Government reserves the right to make multiple awards if, after considering the additional administrative costs, it is in the Government's best interest to do so.

(7) Exchanges with offerors after receipt of a proposal do not constitute a rejection or counteroffer by the Government.

(8) The Government may determine that a proposal is unacceptable if the prices proposed are materially unbalanced between line items or subline items. Unbalanced pricing exists when, despite an acceptable total evaluated price, the price of one or more contract line items is significantly overstated or understated as indicated by the application of cost or price analysis techniques. A proposal may be rejected if the Contracting Officer determines that the lack of balance poses an unacceptable risk to the Government.

(9) If a cost realism analysis is performed, cost realism may be considered by the source selection authority in evaluating performance or schedule risk.

(10) A written award or acceptance of proposal mailed or otherwise furnished to the successful offeror within the time specified in the proposal shall result in a binding contract without further action by either party.

(11) The Government may disclose the following information in postaward debriefings to other offerors:

(i) The overall evaluated cost or price and technical rating of the successful offeror;

(ii) The overall ranking of all offerors, when any ranking was developed by the agency during source selection;

(iii) A summary of the rationale for award; and

(iv) For acquisitions of commercial items, the make and model of the item to be delivered by the successful offeror.

(End of provision)

52.216-1 TYPE OF CONTRACT (APR 1984)

The Government contemplates award of a Firm Fixed Price contract resulting from this solicitation.

(End of clause)

52.217-5 EVALUATION OF OPTIONS (JUL 1990)

(a) Except when it is determined in accordance with FAR 17.206(b) not to be in the Government's best interests, the Government will evaluate offers for award purposes by adding the total price for all options to the total price for the basic requirement. Evaluation of options will not obligate the Government to exercise the option(s).

(b) The Government may reject an offer as nonresponsive if it is materially unbalanced as to prices for the basic requirement and the option quantities. An offer is unbalanced when it is based on prices significantly less than cost for some work and prices which are significantly overstated for other work.

(End of provision)

52.219-4001 SUBCONTRACTING PLAN FOR SMALL BUSINESS CONCERNS
(SEP 2002 CESAS-CT)

(a) In accordance with FAR Clause 52.219-9, large businesses must submit a subcontracting plan. A sample subcontracting plan is located in Section 00800.

(b) The subcontracting targets (expressed in terms of percentages of total planned subcontracting dollars) of the Savannah District are as follows:

Small Business	-	57.2%
Small Disadvantaged Business	-	8.9%
HUBZone Small Business		3.0%
Women-Owned Business	-	8.1%
Veteran-Owned Small Business		0%*
Service-Disabled Veteran-Owned Small Business	-	3.0%**

If you cannot reach the above-stated targets, you must provide written justification with your subcontracting plan detailing the reasons you cannot meet the requirements.

*(c) While Savannah District does not have a specific target for subcontracting with Veteran-Owned small businesses, this must be addressed in any subcontracting plan.

**(d) Service-disabled Veteran-owned Small Business (SD/VOSB) is a composite of Veteran-Owned Small Business. The SD/VOSB target must be included in the Veteran-Owned small business target.

52.222-23 NOTICE OF REQUIREMENT FOR AFFIRMATIVE ACTION TO ENSURE EQUAL EMPLOYMENT OPPORTUNITY FOR CONSTRUCTION (FEB 1999)

(a) The offeror's attention is called to the Equal Opportunity clause and the Affirmative Action Compliance Requirements for Construction clause of this solicitation.

(b) The goals for minority and female participation, expressed in percentage terms for the Contractor's aggregate workforce in each trade on all construction work in the covered area, are as follows:

Goals for minority participation for each trade	Goals for female participation for each trade
27.5%	6.9%

These goals are applicable to all the Contractor's construction work performed in the covered area. If the Contractor performs construction work in a geographical area located outside of the covered area, the Contractor shall apply the goals established for the geographical area where the work is actually performed. Goals are published periodically in the Federal Register in notice form, and these notices may be obtained from any Office of Federal Contract Compliance Programs office.

(c) The Contractor's compliance with Executive Order 11246, as amended, and the regulations in 41 CFR 60-4 shall be based on (1) its implementation of the Equal Opportunity clause, (2) specific affirmative action obligations required by the clause entitled "Affirmative Action Compliance Requirements for Construction," and (3) its efforts to meet the goals. The hours of minority and female employment and training must be substantially uniform throughout the length of the contract, and in each trade. The Contractor shall make a good faith effort to employ minorities and

women evenly on each of its projects. The transfer of minority or female employees or trainees from Contractor to Contractor, or from project to project, for the sole purpose of meeting the Contractor's goals shall be a violation of the contract, Executive Order 11246, as amended, and the regulations in 41 CFR 60-4. Compliance with the goals will be measured against the total work hours performed.

(d) The Contractor shall provide written notification to the Deputy Assistant Secretary for Federal Contract Compliance, U.S. Department of Labor, within 10 working days following award of any construction subcontract in excess of $10,000 at any tier for construction work under the contract resulting from this solicitation. The notification shall list the --

(1) Name, address, and telephone number of the subcontractor;

(2) Employer's identification number of the subcontractor;

(3) Estimated dollar amount of the subcontract;

(4) Estimated starting and completion dates of the subcontract; and

(5) Geographical area in which the subcontract is to be performed.

(e) As used in this Notice, and in any contract resulting from this solicitation, the "covered area" is Georgia, Houston County, Robins Air Force Base
(End of provision)

52.225-12 NOTICE OF BUY AMERICAN ACT REQUIREMENT-- CONSTRUCTION MATERIALS UNDER TRADE AGREEMENTS (MAY 2002)

(a) Definitions. Construction material, designated country construction material, domestic construction material, foreign construction material, and NAFTA country construction material, as used in this provision, are defined in the clause of this solicitation entitled “Buy American Act --Construction Materials under Trade Agreements” (Federal Acquisition Regulation (FAR) clause 52.225-11).

(b) Requests for determination of inapplicability. An offeror requesting a determination regarding the inapplicability of the Buy American Act should submit the request to the Contracting Officer in time to allow a determination before submission of offers. The offeror shall include the information and applicable supporting data required by paragraphs (c) and (d) of FAR clause 52.225-11 in the request. If an offeror has not requested a determination regarding the inapplicability of the Buy American Act before submitting its offer, or has not received a response to a previous request, the offeror shall include the information and supporting data in the offer.

(c) Evaluation of offers. (1) The Government will evaluate an offer requesting exception to the requirements of the Buy American Act, based on claimed unreasonable cost of domestic construction materials, by adding to the offered price the appropriate percentage of the cost of such foreign construction material, as specified in paragraph (b)(4)(i) of FAR clause 52.225-11.

(2) If evaluation results in a tie between an offeror that requested the substitution of foreign construction material based on unreasonable cost and an offeror that did not request an exception, the Contracting Officer will award to the offeror that did not request an exception based on unreasonable cost.

(d) Alternate offers. (1) When an offer includes foreign construction material, other than designated country or NAFTA country construction material, that is not listed by the Government in this solicitation in paragraph (b)(3) of

FAR clause 52.225-11, the offeror also may submit an alternate offer based on use of equivalent domestic, designated country, or NAFTA country construction material.

(2) If an alternate offer is submitted, the offeror shall submit a separate Standard Form 1442 for the alternate offer, and a separate price comparison table prepared in accordance with paragraphs (c) and (d) of FAR clause 52.225-11 for the offer that is based on the use of any foreign construction material for which the Government has not yet determined an exception applies.

(3) If the Government determines that a particular exception requested in accordance with paragraph (c) of FAR clause 52.225-11 does not apply, the Government will evaluate only those offers based on use of the equivalent domestic, designated country, or NAFTA country construction material, and the offeror shall be required to furnish such domestic, designated country, or NAFTA country construction material. An offer based on use of the foreign construction material for which an exception was requested--

(i) Will be rejected as nonresponsive if this acquisition is conducted by sealed bidding; or

(ii) May be accepted if revised during negotiations.

(End of provision)

52.232-4006 SUBJECT TO AVAILABILITY OF FUNDS STATEMENT (SEP 1999 SASCT) (Ref. AFARS 5101.602-2)

This is a high priority requirement as defined in Army Federal Acquisition Regulation (AFAR) Supplement 5101.602-2. This statement is not a commitment of funds. Funds are not presently available for this acquisition. No contract award will be made until appropriated funds are made available from which payment for contract purposes can be made.
(End of provision)

52.232-4007 ACCOUNTING AND APPROPRIATION DATA (APR 1989 CESAS-RM)

Accounting and Appropriation Data will be identified at time of contract award.

(End of clause)

52.233-2 SERVICE OF PROTEST (AUG 1996)

52 Protests, as defined in section 33.101 of the Federal Acquisition Regulation, that are filed directly with an agency, and copies of any protests that are filed with the General Accounting Office (GAO), shall be served on the Contracting Officer (addressed as follows) by obtaining written and dated acknowledgment of receipt from

U.S. Army Corps of Engineers District, Savannah
ATTN: CESAS-CT-C
100 West Oglethorpe Avenue
Savannah, Georgia 31401-3640

(b) The copy of any protest shall be received in the office designated above within one day of filing a protest with the GAO.

(End of provision)

52.236-27 SITE VISIT (CONSTRUCTION) (FEB 1995) – ALTERNATE I (FEB 1995)

(a) The clauses at 52.236-2, Differing Site Conditions, and 52.236-3, Site Investigations and Conditions Affecting the Work, will be included in any contract awarded as a result of this solicitation. Accordingly, offerors or quoters are urged and expected to inspect the site where the work will be performed.

(b) An organized site visit has been scheduled for:

PREPROPOSAL CONFERENCE

GENERAL: The Government will hold a preproposal conference at Robins Air Force Base, Georgia on 16 June 2003 beginning at 9:00 AM in the Conference Room in Building 1555, 775 Macon Street, Robins Air Force Base, Georgia 31098-2207. All Offerors are strongly encouraged to attend this conference. The conference will be conducted in two parts. In the first part, the Government will hold an information session, at which time the Government will explain the evaluation process and the key elements of the technical requirements. The Government will then conduct a site visit of the site designed for this project. Following the site visit, there will be a question and answer session.

QUESTIONS/ANSWERS: The Government requests that questions be provided in writing in advance of the conference. Questions may be submitted via e-mail to Mr. Julian Fant at julian.e.fant@sas02.usace.army.mil At the conference the Government will accept and attempt to answer additional written questions after advance questions have been addressed.

REGISTRATION: Contractors are requested to register prior to the conference by providing the name and firm for each attendee. This information should be submitted to Julian Fant at julian.e.fant@sas02.usace.army.mil or by phone at (478) 926-2103.

ENTERING ROBINS AIR FORCE BASE: Contractors are to allow adequate time to process through security checkpoint.

ACCOMMODATIONS: Attendees are responsible for their own travel and hotel accommodations.

(End of provision)

52.236-28 PREPARATION OF PROPOSALS--CONSTRUCTION (OCT 1997)

(a) Proposals must be (1) submitted on the forms furnished by the Government or on copies of those forms, and (2) manually signed. The person signing a proposal must initial each erasure or change appearing on any proposal form.

(b) The proposal form may require offerors to submit proposed prices for one or more items on various bases, including--

(1) Lump sum price;

(2) Alternate prices;

(3) Units of construction; or

(4) Any combination of paragraphs (b)(1) through (b)(3) of this provision.

(c) If the solicitation requires submission of a proposal on all items, failure to do so may result in the proposal being rejected without further consideration. If a proposal on all items is not required, offerors should insert the words “no proposal” in the space provided for any item on which no price is submitted.

(d) Alternate proposals will not be considered unless this solicitation authorizes their submission.

(End of provision)

52.236-4011 Disclosure of Magnitude of Construction (FAR 36.204 and DFARS 236.204)

The estimated price range for this project is between $25,000,000. And $100,000,000.00.

Section 00600 - Representations & Certifications

CLAUSES INCORPORATED BY FULL TEXT

52.222-38 COMPLIANCE WITH VETERANS' EMPLOYMENT REPORTING REQUIREMENTS (DEC 2001)

By submission of its offer, the offeror represents that, if it is subject to the reporting requirements of 38 U.S.C. 4212(d) (i.e., if it has any contract containing Federal Acquisition Regulation clause 52.222-37, Employment Reports on Special Disabled Veterans, Veterans of the Vietnam Era, and Other Eligible Veterans), it has submitted the most recent VETS-100 Report required by that clause.

(End of provision)

52.203-2 CERTIFICATE OF INDEPENDENT PRICE DETERMINATION (APR 1985)

(a) The offeror certifies that --

(1) The prices in this offer have been arrived at independently, without, for the purpose of restricting competition, any consultation, communication, or agreement with any other offeror or competitor relating to –

(i) Those prices,

(ii) The intention to submit an offer, or

(iii) The methods of factors used to calculate the prices offered:

(2) The prices in this offer have not been and will not be knowingly disclosed by the offeror, directly or indirectly, to any other offeror or competitor before bid opening (in the case of a sealed bid solicitation) or contract award (in the case of a negotiated solicitation) unless otherwise required by law; and

(3) No attempt has been made or will be made by the offeror to induce any other concern to submit or not to submit an offer for the purpose of restricting competition.

(b) Each signature on the offer is considered to be a certification by the signatory that the signatory --

(1) Is the person in the offeror's organization responsible for determining the prices offered in this bid or proposal, and that the signatory has not participated and will not participate in any action contrary to subparagraphs (a)(1) through (a)(3) of this provision; or

(2) (i) Has been authorized, in writing, to act as agent for the following principals in certifying that those principals have not participated, and will not participate in any action contrary to subparagraphs (a)(1) through (a)(3) of this provison _____ (insert full name of person(s) in the offeror's organization responsible for determining the prices offered in this bid or proposal, and the title of his or her position in the offeror's organization);

(ii) As an authorized agent, does certify that the principals named in subdivision (b)(2)(i) above have not participated, and will not participate, in any action contrary to subparagraphs (a)(1) through (a)(3) above; and

(iii) As an agent, has not personally participated, and will not participate, in any action contrary to subparagraphs (a)(1) through (a)(3) of this provision.

(c) If the offeror deletes or modifies subparagraph (a)(2) of this provision, the offeror must furnish with its offer a signed statement setting forth in detail the circumstances of the disclosure.

(End of clause)

52.203-11 CERTIFICATION AND DISCLOSURE REGARDING PAYMENTS TO INFLUENCE CERTAIN FEDERAL TRANSACTIONS (APR 1991)

(a) The definitions and prohibitions contained in the clause, at FAR 52.203-12, Limitation on Payments to Influence Certain Federal Transactions, included in this solicitation, are hereby incorporated by reference in paragraph (b) of this Certification.

(b) The offeror, by signing its offer, hereby certifies to the best of his or her knowledge and belief that on or after December 23, 1989,--

(1) No Federal appropriated funds have been paid or will be paid to any person for influencing or attempting to influence an officer or employee of any agency, a Member of Congress, an officer or employee of Congress, or an employee of a Member of Congress on his or her behalf in connection with the awarding of any Federal contract, the making of any Federal grant, the making of any Federal loan, the entering into of any cooperative agreement, and the extension, continuation, renewal, amendment or modification of any Federal contract, grant, loan, or cooperative agreement;

(2) If any funds other than Federal appropriated funds (including profit or fee received under a covered Federal transaction) have been paid, or will be paid to any person for influencing or attempting to influence an officer or employee of any agency, a Member of Congress, an officer or employee of Congress or an employee of a Member of Congress on his or her behalf in connection with this solicitation, the offeror shall complete and submit, with its offer, OMB standard form LLL, Disclosure of Lobbying Activities, to the Contracting Officer; and

(3) He or she will include the language of this certification in all subcontract awards at any tier and require that all recipients of subcontract awards in excess of $100,000 shall certify and disclose accordingly.

(c) Submission of this certification and disclosure is a prerequisite for making or entering into this contract imposed by section 1352, title 31, United States Code. Any person who makes an expenditure prohibited under this provision, shall be subject to a civil penalty of not less than $10,000, and not more than $100,000, for each such failure.

(End of provision)

52.204-5 WOMEN-OWNED BUSINESS (OTHER THAN SMALL BUSINESS) (MAY 1999)

(a) Definition. Women-owned business concern, as used in this provision, means a concern that is at least 51 percent owned by one or more women; or in the case of any publicly owned business, at least 51 percent of its stock is owned by one or more women; and whose management and daily business operations are controlled by one or more women.

(b) Representation. [Complete only if the offeror is a women-owned business concern and has not represented itself as a small business concern in paragraph (b)(1) of FAR 52.219-1, Small Business Program Representations, of this solicitation.] The offeror represents that it ( ) is a women-owned business concern.

(End of provision)

52.204-4003 TAXPAYER IDENTIFICATION

Taxpayer Identification Number (TIN)," as used in this provision, means the number required by the Internal Revenue Service (IRS) to be used by the offeror in reporting income tax and other returns. The TIN may be either a Social Security Number or an Employer Identification Number.

(a) Taxpayer Identification Number (TIN).

___ TIN:._____

___ TIN has been applied for.

___ TIN is not required because:

___ Offeror is a nonresident alien, foreign corporation, or foreign partnership that does not have income effectively connected with the conduct of a trade or business in the United States and does not have an office or place of business or a fiscal paying agent in the United States;

___ Offeror is an agency or instrumentality of a foreign government;

___ Offeror is an agency or instrumentality of the Federal Government.

(b) Type of organization.

___ Sole proprietorship;

___ Partnership;

___ Corporate entity (not tax-exempt);

___ Corporate entity (tax-exempt);

___ Government entity (Federal, State, or local);

___ Foreign government;

___ International organization per 26 CFR 1.6049-4;

___ Other _____

(c) Common parent.

___ Offeror is not owned or controlled by a common parent

___ Name and TIN of common parent:

Name _____

TIN _____

(End of provision)

52.209-5 CERTIFICATION REGARDING DEBARMENT, SUSPENSION, PROPOSED DEBARMENT, AND OTHER RESPONSIBILITY MATTERS (DEC 2001)

(a)(1) The Offeror certifies, to the best of its knowledge and belief, that--

(i) The Offeror and/or any of its Principals--

(A) Are ( ) are not ( ) presently debarred, suspended, proposed for debarment, or declared ineligible for the award of contracts by any Federal agency;

(B) Have ( ) have not ( ), within a three-year period preceding this offer, been convicted of or had a civil judgment rendered against them for: commission of fraud or a criminal offense in connection with obtaining, attempting to obtain, or performing a public (Federal, state, or local) contract or subcontract; violation of Federal or state antitrust statutes relating to the submission of offers; or commission of embezzlement, theft, forgery, bribery, falsification or destruction of records, making false statements, tax evasion, or receiving stolen property; and

(C) Are ( ) are not ( ) presently indicted for, or otherwise criminally or civilly charged by a governmental entity with, commission of any of the offenses enumerated in subdivision (a)(1)(i)(B) of this provision.

(ii) The Offeror has ( ) has not ( ), within a three-year period preceding this offer, had one or more contracts terminated for default by any Federal agency.

(2) "Principals," for the purposes of this certification, means officers; directors; owners; partners; and, persons having primary management or supervisory responsibilities within a business entity (e.g., general manager; plant manager; head of a subsidiary, division, or business segment, and similar positions).

THIS CERTIFICATION CONCERNS A MATTER WITHIN THE JURISDICTION OF AN AGENCY OF THE UNITED STATES AND THE MAKING OF A FALSE, FICTITIOUS, OR FRAUDULENT CERTIFICATION MAY RENDER THE MAKER SUBJECT TO PROSECUTION UNDER SECTION 1001, TITLE 18, UNITED STATES CODE.

(b) The Offeror shall provide immediate written notice to the Contracting Officer if, at any time prior to contract award, the Offeror learns that its certification was erroneous when submitted or has become erroneous by reason of changed circumstances.

(c) A certification that any of the items in paragraph (a) of this provision exists will not necessarily result in withholding of an award under this solicitation. However, the certification will be considered in connection with a determination of the Offeror's responsibility. Failure of the Offeror to furnish a certification or provide such additional information as requested by the Contracting Officer may render the Offeror nonresponsible.

(d) Nothing contained in the foregoing shall be construed to require establishment of a system of records in order to render, in good faith, the certification required by paragraph (a) of this provision. The knowledge and information of an Offeror is not required to exceed that which is normally possessed by a prudent person in the ordinary course of business dealings.

(e) The certification in paragraph (a) of this provision is a material representation of fact upon which reliance was placed when making award. If it is later determined that the Offeror knowingly rendered an erroneous certification, in addition to other remedies available to the Government, the Contracting Officer may terminate the contract resulting

from this solicitation for default.

(End of provision)

52.219-1 SMALL BUSINESS PROGRAM REPRESENTATIONS (APR 2002) - ALTERNATE I (APR 2002)

(a)(1) The North American Industry Classification System (NAICS) code for this acquisition is 233310.

(2) The small business size standard is $28.5M.

(3) The small business size standard for a concern which submits an offer in its own name, other than on a construction or service contract, but which proposes to furnish a product which it did not itself manufacture, is 500 employees.

(b) Representations. (1) The offeror represents as part of its offer that it ( ) is, ( ) is not a small business concern.

(2) (Complete only if the offeror represented itself as a small business concern in paragraph (b)(1) of this provision.) The offeror represents, for general statistical purposes, that it ( ) is, ( ) is not a small disadvantaged business concern as defined in 13 CFR 124.1002.

(3) (Complete only if the offeror represented itself as a small business concern in paragraph (b)(1) of this provision.) The offeror represents as part of its offer that it ( ) is, ( ) is not a women-owned small business concern.

(4) (Complete only if the offeror represented itself as a small business concern in paragraph (b)(1) of this provision.) The offeror represents as part of its offer that it ( ) is, ( ) is not a veteran-owned small business concern.

(5) (Complete only if the offeror represented itself as a veteran-owned small business concern in paragraph (b)(4) of this provision.) The offeror represents as part of its offer that it ( ) is, ( ) is not a service-disabled veteran-owned small business concern.

(6) [Complete only if the offeror represented itself as a small business concern in paragraph (b)(1) of this provision.] The offeror represents, as part of its offer, that--

(i) It ( ) is, ( ) is not a HUBZone small business concern listed, on the date of this representation, on the List of Qualified HUBZone Small Business Concerns maintained by the Small Business Administration, and no material change in ownership and control, principal office, or HUBZone employee percentage has occurred since it was certified by the Small Business Administration in accordance with 13 CFR part 126; and

(ii) It ( ) is, ( ) is not a joint venture that complies with the requirements of 13 CFR part 126, and the representation in paragraph (b)(6)(i) of this provision is accurate for the HUBZone small business concern or concerns that are participating in the joint venture. (The offeror shall enter the name or names of the HUBZone small business concern or concerns that are participating in the joint venture:_____.) Each HUBZone small business concern participating in the joint venture shall submit a separate signed copy of the HUBZone representation.

(7) (Complete if offeror represented itself as disadvantaged in paragraph (b)(2) of this provision.) The offeror shall check the category in which its ownership falls:

____ Black American.

____ Hispanic American.

____ Native American (American Indians, Eskimos, Aleuts, or Native Hawaiians).

____ Asian-Pacific American (persons with origins from Burma, Thailand, Malaysia, Indonesia, Singapore, Brunei, Japan, China, Taiwan, Laos, Cambodia (Kampuchea), Vietnam, Korea, The Philippines, U.S. Trust Territory of the Pacific Islands (Republic of Palau), Republic of the Marshall Islands, Federated States of Micronesia, the Commonwealth of the Northern Mariana Islands, Guam, Samoa, Macao, Hong Kong, Fiji, Tonga, Kiribati, Tuvalu, or Nauru).

____ Subcontinent Asian (Asian-Indian) American (persons with origins from India, Pakistan, Bangladesh, Sri Lanka, Bhutan, the Maldives Islands, or Nepal).

____ Individual/concern, other than one of the preceding.

(c) Definitions. As used in this provision--

Service-disabled veteran-owned small business concern--

(1) Means a small business concern--

(i) Not less than 51 percent of which is owned by one or more service-disabled veterans or, in the case of any publicly owned business, not less than 51 percent of the stock of which is owned by one or more service-disabled veterans; and

(ii) The management and daily business operations of which are controlled by one or more service-disabled veterans or, in the case of a veteran with permanent and severe disability, the spouse or permanent caregiver of such veteran.

(2) Service-disabled veteran means a veteran, as defined in 38 U.S.C. 101(2), with a disability that is service-connected, as defined in 38 U.S.C. 101(16).

"Small business concern," means a concern, including its affiliates, that is independently owned and operated, not dominant in the field of operation in which it is bidding on Government contracts, and qualified as a small business under the criteria in 13 CFR Part 121 and the size standard in paragraph (a) of this provision.

Veteran-owned small business concern means a small business concern--

(1) Not less than 51 percent of which is owned by one or more veterans (as defined at 38 U.S.C. 101(2)) or, in the case of any publicly owned business, not less than 51 percent of the stock of which is owned by one or more veterans; and

(2) The management and daily business operations of which are controlled by one or more veterans.

"Women-owned small business concern," means a small business concern --

(1) That is at least 51 percent owned by one or more women or, in the case of any publicly owned business, at least 51 percent of the stock of which is owned by one or more women; or

(2) Whose management and daily business operations are controlled by one or more women.

(d) Notice.

(1) If this solicitation is for supplies and has been set aside, in whole or in part, for small business concerns, then the clause in this solicitation providing notice of the set-aside contains restrictions on the source of the end items to be furnished.

(2) Under 15 U.S.C. 645(d), any person who misrepresents a firm's status as a small, HUBZone small, small disadvantaged, or women-owned small business concern in order to obtain a contract to be awarded under the preference programs established pursuant to section 8(a), 8(d), 9, or 15 of the Small Business Act or any other provision of Federal law that specifically references section 8(d) for a definition of program eligibility, shall--

(i) Be punished by imposition of fine, imprisonment, or both;

(ii) Be subject to administrative remedies, including suspension and debarment; and

(iii) Be ineligible for participation in programs conducted under the authority of the Act.

(End of provision)

52.219-19 SMALL BUSINESS CONCERN REPRESENTATION FOR THE SMALL BUSINESS COMPETITIVENESS DEMONSTRATION PROGRAM (OCT 2000)

(a) Definition.

"Emerging small business" as used in this solicitation, means a small business concern whose size is no greater than 50 percent of the numerical size standard applicable to the North American Industry Classification System (NAICS) code assigned to a contracting opportunity.

(b) [Complete only if the Offeror has represented itself under the provision at 52.219-1 as a small business concern under the size standards of this solicitation.] The Offeror [ ] is, [ ] is not an emerging small business.

(c) (Complete only if the Offeror is a small business or an emerging small business, indicating its size range.)

Offeror's number of employees for the past 12 months (check this column if size standard stated in solicitation is expressed in terms of number of employees) or Offeror's average annual gross revenue for the last 3 fiscal years (check this column if size standard stated in solicitation is expressed in terms of annual receipts). (Check one of the following.)

No. of Employees	Avg. Annual Gross Revenues
____ 50 or fewer	____ $1 million or less
____ 51 - 100	____ $1,000,001 - $2 million
____ 101 - 250	____ $2,000,001 - $3.5 million
____ 251 - 500	____ $3,500,001 - $5 million
____ 501 - 750	____ $5,000,001 - $10 million
____ 751 - 1,000	____ $10,000,001 - $17 million
____ Over 1,000	____ Over $17 million

(End of provision)

52.222-22 PREVIOUS CONTRACTS AND COMPLIANCE REPORTS (FEB 1999)

The offeror represents that --

(a) ( ) It has, ( ) has not participated in a previous contract or subcontract subject to the Equal Opportunity clause of this solicitation;

(b) ( ) It has, ( ) has not, filed all required compliance reports; and

(c) Representations indicating submission of required compliance reports, signed by proposed subcontractors, will be obtained before subcontract awards.

(End of provision)

52.223-4 RECOVERED MATERIAL CERTIFICATION (OCT 1997)

As required by the Resource Conservation and Recovery Act of 1976 (42 U.S.C. 6962(c)(3)(A)(i)), the offeror certifies, by signing this offer, that the percentage of recovered materials to be used in the performance of the contract will be at least the amount required by the applicable contract specifications.

(End of provision)

52.223-13 CERTIFICATION OF TOXIC CHEMICAL RELEASE REPORTING (OCT 2000)

(a) Submission of this certification is a prerequisite for making or entering into this contract imposed by Executive Order 12969, August 8, 1995.

(b) By signing this offer, the offeror certifies that--

(1) As the owner or operator of facilities that will be used in the performance of this contract that are subject to the filing and reporting requirements described in section 313 of the Emergency Planning and Community Right-to-Know Act of 1986 (EPCRA) (42 U.S.C. 11023) and section 6607 of the Pollution Prevention Act of 1990 (PPA) (42 U.S.C. 13106), the offeror will file and continue to file for such facilities for the life of the contract the Toxic Chemical Release Inventory Form (Form R) as described in sections 313(a) and (g) of EPCRA and section 6607 of PPA; or

(2) None of its owned or operated facilities to be used in the performance of this contract is subject to the Form R filing and reporting requirements because each such facility is exempt for at least one of the following reasons: (Check each block that is applicable.)

( ) (i) The facility does not manufacture, process or otherwise use any toxic chemicals listed under section 313(c) of EPCRA, 42 U.S.C. 11023(c);

( ) (ii) The facility does not have 10 or more full-time employees as specified in section 313.(b)(1)(A) of EPCRA 42 U.S.C. 11023(b)(1)(A);

( ) (iii) The facility does not meet the reporting thresholds of toxic chemicals established under section 313(f) of EPCRA, 42 U.S.C. 11023(f) (including the alternate thresholds at 40 CFR 372.27, provided an appropriate certification form has been filed with EPA);

( ) (iv) The facility does not fall within Standard Industrial Classification Code (SIC) major groups 20 through 39 or their corresponding North American Industry Classification System (NAICS) sectors 31 through 33; or

( ) (v) The facility is not located within any State of the United States, the District of Columbia, the Commonwealth of Puerto Rico, Guam, American Samoa, the United States Virgin Islands, the Northern Mariana Islands, or any other territory or possession over which the United States has jurisdiction.

(End of clause)

252.209-7001 DISCLOSURE OF OWNERSHIP OR CONTROL BY THE GOVERNMENT OF A TERRORIST COUNTRY (MAR 1998)

(a) "Definitions."

As used in this provision --

(a) "Government of a terrorist country" includes the state and the government of a terrorist country, as well as any political subdivision, agency, or instrumentality thereof.

(2) "Terrorist country" means a country determined by the Secretary of State, under section 6(j)(1)(A) of the Export Administration Act of 1979 (50 U.S.C. App. 2405(j)(i)(A)), to be a country the government of which has repeatedly provided support for such acts of international terrorism. As of the date of this provision, terrorist countries include: Cuba, Iran, Iraq, Libya, North Korea, Sudan, and Syria.

(3) "Significant interest" means --

(i) Ownership of or beneficial interest in 5 percent or more of the firm's or subsidiary's securities. Beneficial interest includes holding 5 percent or more of any class of the firm's securities in "nominee shares," "street names," or some other method of holding securities that does not disclose the beneficial owner;

(ii) Holding a management position in the firm, such as a director or officer;

(iii) Ability to control or influence the election, appointment, or tenure of directors or officers in the firm;

(iv) Ownership of 10 percent or more of the assets of a firm such as equipment, buildings, real estate, or other tangible assets of the firm; or

(v) Holding 50 percent or more of the indebtness of a firm.

(b) "Prohibition on award."

In accordance with 10 U.S.C. 2327, no contract may be awarded to a firm or a subsidiary of a firm if the government of a terrorist country has a significant interest in the firm or subsidiary or, in the case of a subsidiary, the firm that owns the subsidiary, unless a waiver is granted by the Secretary of Defense.

(c) "Disclosure."

If the government of a terrorist country has a significant interest in the Offeror or a subsidiary of the Offeror, the

Offeror shall disclosure such interest in an attachment to its offer. If the Offeror is a subsidiary, it shall also disclose any significant interest the government of a terrorist country has in any firm that owns or controls the subsidiary. The disclosure shall include --

(1) Identification of each government holding a significant interest; and

(2) A description of the significant interest held by each government.

(End of provision)

252.247-7022 REPRESENTATION OF EXTENT OF TRANSPORTATION BY SEA (AUG 1992)

(a) The Offeror shall indicate by checking the appropriate blank in paragraph (b) of this provision whether transportation of supplies by sea is anticipated under the resultant contract. The term supplies is defined in the Transportation of Supplies by Sea clause of this solicitation.

(b) Representation. The Offeror represents that it:

____ (1) Does anticipate that supplies will be transported by sea in the performance of any contract or subcontract resulting from this solicitation.

____ (2) Does not anticipate that supplies will be transported by sea in the performance of any contract or subcontract resulting from this solicitation.

(c) Any contract resulting from this solicitation will include the Transportation of Supplies by Sea clause. If the Offeror represents that it will not use ocean transportation, the resulting contract will also include the Defense FAR Supplement clause at 252.247-7024, Notification of Transportation of Supplies by Sea.

(End of provision)

Section 00700 - Contract Clauses

CLAUSES INCORPORATED BY FULL TEXT

52.202-1 DEFINITIONS (MAY 2001) --ALTERNATE I (MAR 2001)

(a) Agency head or head of the agency means the Secretary (Attorney General, Administrator, Governor, Chairperson, or other chief official, as appropriate) of the agency, unless otherwise indicated, including any deputy or assistant chief official of the executive agency.

(b) Commercial component means any component that is a commercial item.

(c) Component means any item supplied to the Government as part of an end item or of another component, except that for use in 52.225-9, and 52.225-11 see the definitions in 52.225-9(a) and 52.225-11(a).

(d) Contracting Officer means a person with the authority to enter into, administer, and/or terminate contracts and make related determinations and findings. The term includes certain authorized representatives of the Contracting Officer acting within the limits of their authority as delegated by the Contracting Officer.

(e) Nondevelopmental item means--

(1) Any previously developed item of supply used exclusively for governmental purposes by a Federal agency, a State or local government, or a foreign government with which the United States has a mutual defense cooperation agreement;

(2) Any item described in paragraph (f)(1) of this definition that requires only minor modification or modifications of a type customarily available in the commercial marketplace in order to meet the requirements of the procuring department or agency; or

(3) Any item of supply being produced that does not meet the requirements of paragraph (f)(1) or (f)(2) solely because the item is not yet in use.

(f) "Contracting Officer" means a person with the authority to enter into, administer, and/or terminate contracts and make related determinations and findings. The term includes certain authorized representatives of the Contracting Officer acting within the limits of their authority as delegated by the Contracting Officer.

(g) Except as otherwise provided in this contract, the term "subcontracts" includes, but is not limited to, purchase orders and changes and modifications to purchase orders under this contract.

(End of clause)

52.203-3 GRATUITIES (APR 1984)

(a) The right of the Contractor to proceed may be terminated by written notice if, after notice and hearing, the agency head or a designee determines that the Contractor, its agent, or another representative--

(1) Offered or gave a gratuity (e.g., an entertainment or gift) to an officer, official, or employee of the Government; and

(2) Intended, by the gratuity, to obtain a contract or favorable treatment under a contract.

(b) The facts supporting this determination may be reviewed by any court having lawful jurisdiction.

(c) If this contract is terminated under paragraph (a) of this clause, the Government is entitled--

(1) To pursue the same remedies as in a breach of the contract; and

(2) In addition to any other damages provided by law, to exemplary damages of not less than 3 nor more than 10 times the cost incurred by the Contractor in giving gratuities to the person concerned, as determined by the agency head or a designee. (This subparagraph (c)(2) is applicable only if this contract uses money appropriated to the Department of Defense.)

(d) The rights and remedies of the Government provided in this clause shall not be exclusive and are in addition to any other rights and remedies provided by law or under this contract.

(End of clause)

52.203-5 COVENANT AGAINST CONTINGENT FEES (APR 1984)

(a) The Contractor warrants that no person or agency has been employed or retained to solicit or obtain this contract upon an agreement or understanding for a contingent fee, except a bona fide employee or agency. For breach or violation of this warranty, the Government shall have the right to annul this contract without liability or, in its discretion, to deduct from the contract price or consideration, or otherwise recover, the full amount of the contingent fee.

(b) "Bona fide agency," as used in this clause, means an established commercial or selling agency, maintained by a contractor for the purpose of securing business, that neither exerts nor proposes to exert improper influence to solicit or obtain Government contracts nor holds itself out as being able to obtain any Government contract or contracts through improper influence.

"Bona fide employee," as used in this clause, means a person, employed by a contractor and subject to the contractor's supervision and control as to time, place, and manner of performance, who neither exerts nor proposes to exert improper influence to solicit or obtain Government contracts nor holds out as being able to obtain any Government contract or contracts through improper influence.

"Contingent fee," as used in this clause, means any commission, percentage, brokerage, or other fee that is contingent upon the success that a person or concern has in securing a Government contract.

"Improper influence," as used in this clause, means any influence that induces or tends to induce a Government employee or officer to give consideration or to act regarding a Government contract on any basis other than the merits of the matter.

(End of clause)

52.203-6 RESTRICTIONS ON SUBCONTRACTOR SALES TO THE GOVERNMENT (JUL 1995)

(a) Except as provided in (b) of this clause, the Contractor shall not enter into any agreement with an actual or prospective subcontractor, nor otherwise act in any manner, which has or may have the effect of restricting sales by such subcontractors directly to the Government of any item or process (including computer software) made or furnished by the subcontractor under this contract or under any follow-on production contract.

(b) The prohibition in (a) of this clause does not preclude the Contractor from asserting rights that are otherwise authorized by law or regulation.

(c) The Contractor agrees to incorporate the substance of this clause, including this paragraph (c), in all subcontracts under this contract which exceed $100,000.

52.203-7 ANTI-KICKBACK PROCEDURES. (JUL 1995)

(a) Definitions.

"Kickback," as used in this clause, means any money, fee, commission, credit, gift, gratuity, thing of value, or compensation of any kind which is provided, directly or indirectly, to any prime Contractor, prime Contractor employee, subcontractor, or subcontractor employee for the purpose of improperly obtaining or rewarding favorable treatment in connection with a prime contract or in connection with a subcontract relating to a prime contract.

"Person," as used in this clause, means a corporation, partnership, business association of any kind, trust, joint-stock company, or individual.

"Prime contract," as used in this clause, means a contract or contractual action entered into by the United States for the purpose of obtaining supplies, materials, equipment, or services of any kind.

"Prime Contractor," as used in this clause, means a person who has entered into a prime contract with the United States.

"Prime Contractor employee," as used in this clause, means any officer, partner, employee, or agent of a prime Contractor.

"Subcontract," as used in this clause, means a contract or contractual action entered into by a prime Contractor or subcontractor for the purpose of obtaining supplies, materials, equipment, or services of any kind under a prime contract.

"Subcontractor," as used in this clause, (1) means any person, other than the prime Contractor, who offers to furnish or furnishes any supplies, materials, equipment, or services of any kind under a prime contract or a subcontract entered into in connection with such prime contract, and (2) includes any person who offers to furnish or furnishes general supplies to the prime Contractor or a higher tier subcontractor.

"Subcontractor employee," as used in this clause, means any officer, partner, employee, or agent of a subcontractor.

(b) The Anti-Kickback Act of 1986 (41 U.S.C. 51-58) (the Act), prohibits any person from -

(1) Providing or attempting to provide or offering to provide any kickback;

(2) Soliciting, accepting, or attempting to accept any kickback; or

(3) Including, directly or indirectly, the amount of any kickback in the contract price charged by a prime Contractor to the United States or in the contract price charged by a subcontractor to a prime Contractor or higher tier subcontractor.

(c)(1) The Contractor shall have in place and follow reasonable procedures designed to prevent and detect possible violations described in paragraph (b) of this clause in its own operations and direct business relationships.

(2) When the Contractor has reasonable grounds to believe that a violation described in paragraph (b) of this clause

may have occurred, the Contractor shall promptly report in writing the possible violation. Such reports shall be made to the inspector general of the contracting agency, the head of the contracting agency if the agency does not have an inspector general, or the Department of Justice.

(3) The Contractor shall cooperate fully with any Federal agency investigating a possible violation described in paragraph (b) of this clause.

(4) The Contracting Officer may (i) offset the amount of the kickback against any monies owed by the United States under the prime contract and/or (ii) direct that the Prime Contractor withhold, from sums owed a subcontractor under the prime contract, the amount of any kickback. The Contracting Officer may order the monies withheld under subdivision (c)(4)(ii) of this clause be paid over to the Government unless the Government has already offset those monies under subdivision (c)(4)(i) of this clause. In either case, the Prime Contractor shall notify the Contracting Officer when the monies are withheld.

(5) The Contractor agrees to incorporate the substance of this clause, including this subparagraph (c)(5) but excepting subparagraph (c)(1), in all subcontracts under this contract which exceed $100,000.

52.203-8 CANCELLATION, RESCISSION, AND RECOVERY OF FUNDS FOR ILLEGAL OR IMPROPER ACTIVITY (JAN 1997)

(a) If the Government receives information that a contractor or a person has engaged in conduct constituting a violation of subsection (a), (b), (c), or (d) of Section 27 of the Office of Federal Procurement Policy Act (41 U.S.C. 423) (the Act), as amended by section 4304 of the 1996 National Defense Authorization Act for Fiscal Year 1996 (Pub. L. 104-106), the Government may--

(1) Cancel the solicitation, if the contract has not yet been awarded or issued; or

(2) Rescind the contract with respect to which--

(i) The Contractor or someone acting for the Contractor has been convicted for an offense where the conduct constitutes a violation of subsection 27(a) or (b) of the Act for the purpose of either--

(A) Exchanging the information covered by such subsections for anything of value; or

(B) Obtaining or giving anyone a competitive advantage in the award of a Federal agency procurement contract; or

(ii) The head of the contracting activity has determined, based upon a preponderance of the evidence, that the Contractor or someone acting for the Contractor has engaged in conduct constituting an offense punishable under subsections 27(e)(1) of the Act.

(b) If the Government rescinds the contract under paragraph (a) of this clause, the Government is entitled to recover, in addition to any penalty prescribed by law, the amount expended under the contract.

(c) The rights and remedies of the Government specified herein are not exclusive, and are in addition to any other rights and remedies provided by law, regulation, or under this contract.

(End of clause)

52.203-10 PRICE OR FEE ADJUSTMENT FOR ILLEGAL OR IMPROPER ACTIVITY (JAN 1997)

(a) The Government, at its election, may reduce the price of a fixed-price type contract and the total cost and fee under a cost-type contract by the amount of profit or fee determined as set forth in paragraph (b) of this clause if the head of the contracting activity or designee determines that there was a violation of subsection 27 (a), (b), or (c) of the Office of Federal Procurement Policy Act, as amended (41 U.S.C. 423), as implemented in section 3.104 of the Federal Acquisition Regulation.

(b) The price or fee reduction referred to in paragraph (a) of this clause shall be--

(1) For cost-plus-fixed-fee contracts, the amount of the fee specified in the contract at the time of award;

(2) For cost-plus-incentive-fee contracts, the target fee specified in the contract at the time of award, notwithstanding any minimum fee or "fee floor" specified in the contract;

(3) For cost-plus-award-fee contracts--

(i) The base fee established in the contract at the time of contract award;

(ii) If no base fee is specified in the contract, 30 percent of the amount of each award fee otherwise payable to the Contractor for each award fee evaluation period or at each award fee determination point.

(4) For fixed-price-incentive contracts, the Government may--

(i) Reduce the contract target price and contract target profit both by an amount equal to the initial target profit specified in the contract at the time of contract award; or

(ii) If an immediate adjustment to the contract target price and contract target profit would have a significant adverse impact on the incentive price revision relationship under the contract, or adversely affect the contract financing provisions, the Contracting Officer may defer such adjustment until establishment of the total final price of the contract. The total final price established in accordance with the incentive price revision provisions of the contract shall be reduced by an amount equal to the initial target profit specified in the contract at the time of contract award and such reduced price shall be the total final contract price.

(5) For firm-fixed-price contracts, by 10 percent of the initial contract price or a profit amount determined by the Contracting Officer from records or documents in existence prior to the date of the contract award.

(c) The Government may, at its election, reduce a prime contractor's price or fee in accordance with the procedures of paragraph (b) of this clause for violations of the Act by its subcontractors by an amount not to exceed the amount of profit or fee reflected in the subcontract at the time the subcontract was first definitively priced.

(d) In addition to the remedies in paragraphs (a) and (c) of this clause, the Government may terminate this contract for default. The rights and remedies of the Government specified herein are not exclusive, and are in addition to any other rights and remedies provided by law or under this contract.

(End of clause)

52.203-12 LIMITATION ON PAYMENTS TO INFLUENCE CERTAIN FEDERAL TRANSACTIONS (JUN 1997)

(a) Definitions.

"Agency," as used in this clause, means executive agency as defined in 2.101.

"Covered Federal action," as used in this clause, means any of the following Federal actions:

(1) The awarding of any Federal contract.

(2) The making of any Federal grant.

(3) The making of any Federal loan.

(4) The entering into of any cooperative agreement.

(5) The extension, continuation, renewal, amendment, or modification of any Federal contract, grant, loan, or cooperative agreement.

"Indian tribe" and "tribal organization," as used in this clause, have the meaning provided in section 4 of the Indian Self-Determination and Education Assistance Act (25 U.S.C. 450B) and include Alaskan Natives.

"Influencing or attempting to influence," as used in this clause, means making, with the intent to influence, any communication to or appearance before an officer or employee of any agency, a Member of Congress, an officer or employee of Congress, or an employee of a Member of Congress in connection with any covered Federal action.

"Local government," as used in this clause, means a unit of government in a State and, if chartered, established, or otherwise recognized by a State for the performance of a governmental duty, including a local public authority, a special district, an intrastate district, a council of governments, a sponsor group representative organization, and any other instrumentality of a local government.

"Officer or employee of an agency," as used in this clause, includes the following individuals who are employed by an agency:

(1) An individual who is appointed to a position in the Government under Title 5, United States Code, including a position under a temporary appointment.

(2) A member of the uniformed services, as defined in subsection 101(3),Title 37, United States Code.

(3) A special Government employee, as defined in section 202, Title 18, United States Code.

(4) An individual who is a member of a Federal advisory committee, as defined by the Federal Advisory Committee Act, Title 5, United States Code, appendix 2.

"Person," as used in this clause, means an individual, corporation, company, association, authority, firm, partnership, society, State, and local government, regardless of whether such entity is operated for profit, or not for profit. This term excludes an Indian tribe, tribal organization, or any other Indian organization with respect to expenditures specifically permitted by other Federal law.

"Reasonable compensation," as used in this clause, means, with respect to a regularly employed officer or employee of any person, compensation that is consistent with the normal compensation for such officer or employee for work that is not furnished to, not funded by, or not furnished in cooperation with the Federal Government.

"Reasonable payment," as used in this clause, means, with respect to professional and other technical services, a payment in an amount that is consistent with the amount normally paid for such services in the private sector.

"Recipient," as used in this clause, includes the Contractor and all subcontractors. This term excludes an Indian tribe, tribal organization, or any other Indian organization with respect to expenditures specifically permitted by other Federal law.

"Regularly employed," as used in this clause, means, with respect to an officer or employee of a person requesting or receiving a Federal contract, an officer or employee who is employed by such person for at least 130 working days within 1 year immediately preceding the date of the submission that initiates agency consideration of such person for receipt of such contract. An officer or employee who is employed by such person for less than 130 working days within 1 year immediately preceding the date of the submission that initiates agency consideration of such person shall be considered to be regularly employed as soon as he or she is employed by such person for 130 working days.

"State," as used in this clause, means a State of the United States, the District of Columbia, the Commonwealth of Puerto Rico, a territory or possession of the United States, an agency or instrumentality of a State, and multi-State, regional, or interstate entity having governmental duties and powers.

(b) Prohibitions.

(1) Section 1352 of Title 31, United States Code, among other things, prohibits a recipient of a Federal contract, grant, loan, or cooperative agreement from using appropriated funds to pay any person for influencing or attempting to influence an officer or employee of any agency, a Member of Congress, an officer or employee of Congress, or an employee of a Member of Congress in connection with any of the following covered Federal actions: the awarding of any Federal contract; the making of any Federal grant; the making of any Federal loan; the entering into of any cooperative agreement; or the modification of any Federal contract, grant, loan, or cooperative agreement.

(2) The Act also requires Contractors to furnish a disclosure if any funds other than Federal appropriated funds (including profit or fee received under a covered Federal transaction) have been paid, or will be paid, to any person for influencing or attempting to influence an officer or employee of any agency, a Member of Congress, an officer or employee of Congress, or an employee of a Member of Congress in connection with a Federal contract, grant, loan, or cooperative agreement.

(3) The prohibitions of the Act do not apply under the following conditions:

(i) Agency and legislative liaison by own employees.

(A) The prohibition on the use of appropriated funds, in subparagraph (b)(1) of this clause, does not apply in the case of a payment of reasonable compensation made to an officer or employee of a person requesting or receiving a covered Federal action if the payment is for agency and legislative liaison activities not directly related to a covered Federal action.

(B) For purposes of subdivision (b)(3)(i)(A) of this clause, providing any information specifically requested by an agency or Congress is permitted at any time.

(C) The following agency and legislative liaison activities are permitted at any time where they are not related to a specific solicitation for any covered Federal action:

(1) Discussing with an agency the qualities and characteristics (including individual demonstrations) of the person's products or services, conditions or terms of sale, and service capabilities.

(2) Technical discussions and other activities regarding the application or adaptation of the person's products or services for an agency's use.

(D) The following agency and legislative liaison activities are permitted where they are prior to formal solicitation of any covered Federal action--

(1) Providing any information not specifically requested but necessary for an agency to make an informed decision about initiation of a covered Federal action;

(2) Technical discussions regarding the preparation of an unsolicited proposal prior to its official submission; and

(3) Capability presentations by persons seeking awards from an agency pursuant to the provisions of the Small Business Act, as amended by Pub. L. 95-507, and subsequent amendments.

(E) Only those services expressly authorized by subdivision (b)(3)(i)(A) of this clause are permitted under this clause.

(ii) Professional and technical services.

(A) The prohibition on the use of appropriated funds, in subparagraph (b)(1) of this clause, does not apply in the case of--

(1) A payment of reasonable compensation made to an officer or employee of a person requesting or receiving a covered Federal action or an extension, continuation, renewal, amendment, or modification of a covered Federal action, if payment is for professional or technical services rendered directly in the preparation, submission, or negotiation of any bid, proposal, or application for that Federal action or for meeting requirements imposed by or pursuant to law as a condition for receiving that Federal action.

(2) Any reasonable payment to a person, other than an officer or employee of a person requesting or receiving a covered Federal action or an extension, continuation, renewal, amendment, or modification of a covered Federal action if the payment is for professional or technical services rendered directly in the preparation, submission, or negotiation of any bid, proposal, or application for that Federal action or for meeting requirements imposed by or pursuant to law as a condition for receiving that Federal action. Persons other than officers or employees of a person requesting or receiving a covered Federal action include consultants and trade associations.

(B) For purposes of subdivision (b)(3)(ii)(A) of this clause, "professional and technical services" shall be limited to advice and analysis directly applying any professional or technical discipline. For example, drafting of a legal document accompanying a bid or proposal by a lawyer is allowable. Similarly, technical advice provided by an engineer on the performance or operational capability of a piece of equipment rendered directly in the negotiation of a contract is allowable. However, communications with the intent to influence made by a professional (such as a licensed lawyer) or a technical person (such as a licensed accountant) are not allowable under this section unless they provide advice and analysis directly applying their professional or technical expertise and unless the advice or analysis is rendered directly and solely in the preparation, submission or negotiation of a covered Federal action. Thus, for example, communications with the intent to influence made by a lawyer that do not provide legal advice or analysis directly and solely related to the legal aspects of his or her client's proposal, but generally advocate one proposal over another are not allowable under this section because the lawyer is not providing professional legal services. Similarly, communications with the intent to influence made by an engineer providing an engineering analysis prior to the preparation or submission of a bid or proposal are not allowable under this section since the engineer is providing technical services but not directly in the preparation, submission or negotiation of a covered Federal action.

(C) Requirements imposed by or pursuant to law as a condition for receiving a covered Federal award include those required by law or regulation and any other requirements in the actual award documents.

(D) Only those services expressly authorized by subdivisions (b)(3)(ii)(A)(1) and (2) of this clause are permitted under this clause.

(E) The reporting requirements of FAR 3.803(a) shall not apply with respect to payments of reasonable compensation made to regularly employed officers or employees of a person.

(c) Disclosure.

(1) The Contractor who requests or receives from an agency a Federal contract shall file with that agency a disclosure form, OMB standard form LLL, Disclosure of Lobbying Activities, if such person has made or has agreed to make any payment using nonappropriated funds (to include profits from any covered Federal action), which would be prohibited under subparagraph (b)(1) of this clause, if paid for with appropriated funds.

(2) The Contractor shall file a disclosure form at the end of each calendar quarter in which there occurs any event that materially affects the accuracy of the information contained in any disclosure form previously filed by such person under subparagraph (c)(1) of this clause. An event that materially affects the accuracy of the information reported includes--

(i) A cumulative increase of $25,000 or more in the amount paid or expected to be paid for influencing or attempting to influence a covered Federal action; or

(ii) A change in the person(s) or individual(s) influencing or attempting to influence a covered Federal action; or

(iii) A change in the officer(s), employee(s), or Member(s) contacted to influence or attempt to influence a covered Federal action.

(3) The Contractor shall require the submittal of a certification, and if required, a disclosure form by any person who requests or receives any subcontract exceeding $100,000 under the Federal contract.

(4) All subcontractor disclosure forms (but not certifications) shall be forwarded from tier to tier until received by the prime Contractor. The prime Contractor shall submit all disclosures to the Contracting Officer at the end of the calendar quarter in which the disclosure form is submitted by the subcontractor. Each subcontractor certification shall be retained in the subcontract file of the awarding Contractor.

(d) Agreement. The Contractor agrees not to make any payment prohibited by this clause.

(e) Penalties.

(1) Any person who makes an expenditure prohibited under paragraph (a) of this clause or who fails to file or amend the disclosure form to be filed or amended by paragraph (b) of this clause shall be subject to civil penalties as provided for by 31 U.S.C. 1352. An imposition of a civil penalty does not prevent the Government from seeking any other remedy that may be applicable.

(2) Contractors may rely without liability on the representation made by their subcontractors in the certification and disclosure form.

(f) Cost allowability. Nothing in this clause makes allowable or reasonable any costs which would otherwise be unallowable or unreasonable. Conversely, costs made specifically unallowable by the requirements in this clause will not be made allowable under any other provision.

(End of clause)

52.204-4 PRINTED OR COPIED DOUBLE-SIDED ON RECYCLED PAPER (AUG 2000)

(a) Definitions. As used in this clause--

“Postconsumer material” means a material or finished product that has served its intended use and has been discarded for disposal or recovery, having completed its life as a consumer item. Postconsumer material is a part of the broader category of “recovered material.” For paper and paper products, postconsumer material means “postconsumer fiber” defined by the U.S. Environmental Protection Agency (EPA) as--

(1) Paper, paperboard, and fibrous materials from retail stores, office buildings, homes, and so forth, after they have passed through their end-usage as a consumer item, including: used corrugated boxes; old newspapers; old magazines; mixed waste paper; tabulating cards; and used cordage; or

(2) All paper, paperboard, and fibrous materials that enter and are collected from municipal solid waste; but not

(3) Fiber derived from printers' over-runs, converters' scrap, and over-issue publications.

“Printed or copied double-sided” means printing or reproducing a document so that information is on both sides of a sheet of paper.

“Recovered material,” for paper and paper products, is defined by EPA in its Comprehensive Procurement Guideline as “recovered fiber” and means the following materials:

(1) Postconsumer fiber; and

(2) Manufacturing wastes such as--

(i) Dry paper and paperboard waste generated after completion of the papermaking process (that is, those manufacturing operations up to and including the cutting and trimming of the paper machine reel into smaller rolls or rough sheets) including: envelope cuttings, bindery trimmings, and other paper and paperboard waste resulting from printing, cutting, forming, and other converting operations; bag, box, and carton manufacturing wastes; and butt rolls, mill wrappers, and rejected unused stock; and

(ii) Repulped finished paper and paperboard from obsolete inventories of paper and paperboard manufacturers, merchants, wholesalers, dealers, printers, converters, or others.

(b) In accordance with Section 101 of Executive Order 13101 of September 14, 1998, Greening the Government through Waste Prevention, Recycling, and Federal Acquisition, the Contractor is encouraged to submit paper documents, such as offers, letters, or reports, that are printed or copied double-sided on recycled paper that meet minimum content standards specified in Section 505 of Executive Order 13101, when not using electronic commerce methods to submit information or data to the Government.

(c) If the Contractor cannot purchase high-speed copier paper, offset paper, forms bond, computer printout paper, carbonless paper, file folders, white wove envelopes, writing and office paper, book paper, cotton fiber paper, and cover stock meeting the 30 percent postconsumer material standard for use in submitting paper documents to the Government, it should use paper containing no less than 20 percent postconsumer material. This lesser standard should be used only when paper meeting the 30 percent postconsumer material standard is not obtainable at a reasonable price or does not meet reasonable performance standards.

(End of clause)

52.209-6 PROTECTING THE GOVERNMENT'S INTEREST WHEN SUBCONTRACTING WITH CONTRACTORS DEBARRED, SUSPENDED, OR PROPOSED FOR DEBARMENT (JUL 1995)

(a) The Government suspends or debars Contractors to protect the Government's interests. The Contractor shall not

enter into any subcontract in excess of the $25,000 with a Contractor that is debarred, suspended, or proposed for debarment unless there is a compelling reason to do so.

(b) The Contractor shall require each proposed first-tier subcontractor, whose subcontract will exceed $25,000, to disclose to the Contractor, in writing, whether as of the time of award of the subcontract, the subcontractor, or its principles, is or is not debarred, suspended, or proposed for debarment by the Federal Government.

(c) A corporate officer or a designee of the Contractor shall notify the Contracting Officer, in writing, before entering into a subcontract with a party that is debarred, suspended, or proposed for debarment (see FAR 9.404 for information on the List of Parties Excluded from Federal Procurement and Nonprocurement Programs). The notice must include the following:

(1) The name of the subcontractor.

(2) The Contractor's knowledge of the reasons for the subcontractor being on the List of Parties Excluded from Federal Procurement and Nonprocurement Programs.

(3) The compelling reason(s) for doing business with the subcontractor notwithstanding its inclusion on the List of Parties Excluded from Federal Procurement and Nonprocurement Programs.

(4) The systems and procedures the Contractor has established to ensure that it is fully protecting the Government's interests when dealing with such subcontractor in view of the specific basis for the party's debarment, suspension, or proposed debarment.

(End of clause)

52.211-15 DEFENSE PRIORITY AND ALLOCATION REQUIREMENTS (SEP 1990)

This is a rated order certified for national defense use, and the Contractor shall follow all the requirements of the Defense Priorities and Allocations System regulation (15 CFR 700).

(End of clause)

52.215-2 AUDIT AND RECORDS--NEGOTIATION (JUN 1999)

(a) As used in this clause, "records" includes books, documents, accounting procedures and practices, and other data, regardless of type and regardless of whether such items are in written form, in the form of computer data, or in any other form.

(b) Examination of costs. If this is a cost-reimbursement, incentive, time-and-materials, labor-hour, or price redeterminable contract, or any combination of these, the Contractor shall maintain and the Contracting Officer, or an authorized representative of the Contracting Officer, shall have the right to examine and audit all records and other evidence sufficient to reflect properly all costs claimed to have been incurred or anticipated to be incurred directly or indirectly in performance of this contract. This right of examination shall include inspection at all reasonable times of the Contractor's plants, or parts of them, engaged in performing the contract.

(c) Cost or pricing data. If the Contractor has been required to submit cost or pricing data in connection with any pricing action relating to this contract, the Contracting Officer, or an authorized representative of the Contracting Officer, in order to evaluate the accuracy, completeness, and currency of the cost or pricing data, shall have the right to examine and audit all of the Contractor's records, including computations and projections, related to--

(1) The proposal for the contract, subcontract, or modification;

(2) The discussions conducted on the proposal(s), including those related to negotiating;

(3) Pricing of the contract, subcontract, or modification; or

(4) Performance of the contract, subcontract or modification.

(d) Comptroller General--(1) The Comptroller General of the United States, or an authorized representative, shall have access to and the right to examine any of the Contractor's directly pertinent records involving transactions related to this contract or a subcontract hereunder.

(2) This paragraph may not be construed to require the Contractor or subcontractor to create or maintain any record that the Contractor or subcontractor does not maintain in the ordinary course of business or pursuant to a provision of law.

(e) Reports. If the Contractor is required to furnish cost, funding, or performance reports, the Contracting Officer or an authorized representative of the Contracting Officer shall have the right to examine and audit the supporting records and materials, for the purpose of evaluating (1) the effectiveness of the Contractor's policies and procedures to produce data compatible with the objectives of these reports and (2) the data reported.

(f) Availability. The Contractor shall make available at its office at all reasonable times the records, materials, and other evidence described in paragraphs (a), (b), (c), (d), and (e) of this clause, for examination, audit, or reproduction, until 3 years after final payment under this contract or for any shorter period specified in Subpart 4.7, Contractor Records Retention, of the Federal Acquisition Regulation (FAR), or for any longer period required by statute or by other clauses of this contract. In addition--

(1) If this contract is completely or partially terminated, the Contractor shall make available the records relating to the work terminated until 3 years after any resulting final termination settlement; and

(2) The Contractor shall make available records relating to appeals under the Disputes clause or to litigation or the settlement of claims arising under or relating to this contract until such appeals, litigation, or claims are finally resolved.

(g) The Contractor shall insert a clause containing all the terms of this clause, including this paragraph (g), in all subcontracts under this contract that exceed the simplified acquisition threshold, and--

(1) That are cost-reimbursement, incentive, time-and-materials, labor-hour, or price-redeterminable type or any combination of these;

(2) For which cost or pricing data are required; or

(3) That require the subcontractor to furnish reports as discussed in paragraph (e) of this clause.

The clause may be altered only as necessary to identify properly the contracting parties and the Contracting Officer under the Government prime contract.

(End of clause)

52.215-11 PRICE REDUCTION FOR DEFECTIVE COST OR PRICING DATA--MODIFICATIONS (OCT 1997)

(a) This clause shall become operative only for any modification to this contract involving a pricing adjustment expected to exceed the threshold for submission of cost or pricing data at FAR 15.403-4, except that this clause does not apply to any modification if an exception under FAR 15.403-1 applies.

(b) If any price, including profit or fee, negotiated in connection with any modification under this clause, or any cost reimbursable under this contract, was increased by any significant amount because (1) the Contractor or a subcontractor furnished cost or pricing data that were not complete, accurate, and current as certified in its Certificate of Current Cost or Pricing Data, (2) a subcontractor or prospective subcontractor furnished the Contractor cost or pricing data that were not complete, accurate, and current as certified in the Contractor's Certificate of Current Cost or Pricing Data, or (3) any of these parties furnished data of any description that were not accurate, the price or cost shall be reduced accordingly and the contract shall be modified to reflect the reduction. This right to a price reduction is limited to that resulting from defects in data relating to modifications for which this clause becomes operative under paragraph (a) of this clause.

(c) Any reduction in the contract price under paragraph (b) of this clause due to defective data from a prospective subcontractor that was not subsequently awarded the subcontract shall be limited to the amount, plus applicable overhead and profit markup, by which--

(1) The actual subcontract; or

(2) The actual cost to the Contractor, if there was no subcontract, was less than the prospective subcontract cost estimate submitted by the Contractor; provided, that the actual subcontract price was not itself affected by defective cost or pricing data.

(d)(1) If the Contracting Officer determines under paragraph (b) of this clause that a price or cost reduction should be made, the Contractor agrees not to raise the following matters as a defense:

(i) The Contractor or subcontractor was a sole source supplier or otherwise was in a superior bargaining position and thus the price of the contract would not have been modified even if accurate, complete, and current cost or pricing data had been submitted.

(ii) The Contracting Officer should have known that the cost or pricing data in issue were defective even though the Contractor or subcontractor took no affirmative action to bring the character of the data to the attention of the Contracting Officer.

(iii) The contract was based on an agreement about the total cost of the contract and there was no agreement about the cost of each item procured under the contract.

(iv) The Contractor or subcontractor did not submit a Certificate of Current Cost or Pricing Data.

(2)(i) Except as prohibited by subdivision (d)(2)(ii) of this clause, an offset in an amount determined appropriate by the Contracting Officer based upon the facts shall be allowed against the amount of a contract price reduction if--

(A) The Contractor certifies to the Contracting Officer that, to the best of the Contractor's knowledge and belief, the Contractor is entitled to the offset in the amount requested; and

(B) The Contractor proves that the cost or pricing data were available before the “as of” date specified on its Certificate of Current Cost or Pricing Data, and that the data were not submitted before such date.

(ii) An offset shall not be allowed if--

(A) The understated data were known by the Contractor to be understated before the “as of” date specified on its Certificate of Current Cost or Pricing Data; or

(B) The Government proves that the facts demonstrate that the contract price would not have increased in the amount to be offset even if the available data had been submitted before the “as of” date specified on its Certificate of Current Cost or Pricing Data.

(e) If any reduction in the contract price under this clause reduces the price of items for which payment was made prior to the date of the modification reflecting the price reduction, the Contractor shall be liable to and shall pay the United States at the time such overpayment is repaid--

(1) Simple interest on the amount of such overpayment to be computed from the date(s) of overpayment to the Contractor to the date the Government is repaid by the Contractor at the applicable underpayment rate effective for each quarter prescribed by the Secretary of the Treasury under 26 U.S.C. 6621(a)(2); and

A penalty equal to the amount of the overpayment, if the Contractor or subcontractor knowingly submitted cost or pricing data that were incomplete, inaccurate, or noncurrent.

(End of clause)

52.215-13 SUBCONTRACTOR COST OR PRICING DATA--MODIFICATIONS (OCT 1997)

(a) The requirements of paragraphs (b) and (c) of this clause shall--

(1) Become operative only for any modification to this contract involving a pricing adjustment expected to exceed the threshold for submission of cost or pricing data at FAR 15.403-4; and

(2) Be limited to such modifications.

(b) Before awarding any subcontract expected to exceed the threshold for submission of cost or pricing data at FAR 15.403-4, on the date of agreement on price or the date of award, whichever is later; or before pricing any subcontract modification involving a pricing adjustment expected to exceed the threshold for submission of cost or pricing data at FAR 15.403-4, the Contractor shall require the subcontractor to submit cost or pricing data (actually or by specific identification in writing), unless an exception under FAR 15.403-1 applies.

(c) The Contractor shall require the subcontractor to certify in substantially the form prescribed in FAR 15.406-2 that, to the best of its knowledge and belief, the data submitted under paragraph (b) of this clause were accurate, complete, and current as of the date of agreement on the negotiated price of the subcontract or subcontract modification.

The Contractor shall insert the substance of this clause, including this paragraph (d), in each subcontract that exceeds the threshold for submission of cost or pricing data at FAR 15.403-4 on the date of agreement on price or the date of award, whichever is later.

(End of clause)

52.215-21 REQUIREMENTS FOR COST OR PRICING DATA OR INFORMATION OTHER THAN COST OR PRICING DATA--MODIFICATIONS (OCT 1997)

(a) Exceptions from cost or pricing data. (1) In lieu of submitting cost or pricing data for modifications under this contract, for price adjustments expected to exceed the threshold set forth at FAR 15.403-4 on the date of the agreement on price or the date of the award, whichever is later, the Contractor may submit a written request for

exception by submitting the information described in the following subparagraphs. The Contracting Officer may require additional supporting information, but only to the extent necessary to determine whether an exception should be granted, and whether the price is fair and reasonable--

(i) Identification of the law or regulation establishing the price offered. If the price is controlled under law by periodic rulings, reviews, or similar actions of a governmental body, attach a copy of the controlling document, unless it was previously submitted to the contracting office.

(ii) Information on modifications of contracts or subcontracts for commercial items. (A) If--

(1) The original contract or subcontract was granted an exception from cost or pricing data requirements because the price agreed upon was based on adequate price competition or prices set by law or regulation, or was a contract or subcontract for the acquisition of a commercial item; and

(2) The modification (to the contract or subcontract) is not exempted based on one of these exceptions, then the Contractor may provide information to establish that the modification would not change the contract or subcontract from a contract or subcontract for the acquisition of a commercial item to a contract or subcontract for the acquisition of an item other than a commercial item.

(B) For a commercial item exception, the Contractor shall provide, at a minimum, information on prices at which the same item or similar items have previously been sold that is adequate for evaluating the reasonableness of the price of the modification. Such information may include--

(1) For catalog items, a copy of or identification of the catalog and its date, or the appropriate pages for the offered items, or a statement that the catalog is on file in the buying office to which the proposal is being submitted. Provide a copy or describe current discount policies and price lists (published or unpublished), e.g., wholesale, original equipment manufacturer, or reseller. Also explain the basis of each offered price and its relationship to the established catalog price, including how the proposed price relates to the price of recent sales in quantities similar to the proposed quantities.

(2) For market-priced items, the source and date or period of the market quotation or other basis for market price, the base amount, and applicable discounts. In addition, describe the nature of the market.

(3) For items included on an active Federal Supply Service Multiple Award Schedule contract, proof that an exception has been granted for the schedule item.

(2) The Contractor grants the Contracting Officer or an authorized representative the right to examine, at any time before award, books, records, documents, or other directly pertinent records to verify any request for an exception under this clause, and the reasonableness of price. For items priced using catalog or market prices, or law or regulation , access does not extend to cost or profit information or other data relevant solely to the Contractor's determination of the prices to be offered in the catalog or marketplace.

(b) Requirements for cost or pricing data. If the Contractor is not granted an exception from the requirement to submit cost or pricing data, the following applies:

(1) The Contractor shall submit cost or pricing data and supporting attachments in accordance with Table 15-2 of FAR 15.408.

As soon as practicable after agreement on price, but before award (except for unpriced actions), the Contractor shall submit a Certificate of Current Cost or Pricing Data, as prescribed by FAR 15.406-2.

(End of clause)

52.219-4 NOTICE OF PRICE EVALUATION PREFERENCE FOR HUBZONE SMALL BUSINESS CONCERNS (JAN 1999)

(a) Definition. HUBZone small business concern, as used in this clause, means a small business concern that appears on the List of Qualified HUBZone Small Business Concerns maintained by the Small Business Administration.

(b) Evaluation preference. (1) Offers will be evaluated by adding a factor of 10 percent to the price of all offers, except--

(i) Offers from HUBZone small business concerns that have not waived the evaluation preference;

(ii) Otherwise successful offers from small business concerns;

(iii) Otherwise successful offers of eligible products under the Trade Agreements Act when the dollar threshold for application of the Act is exceeded (see 25.402 of the Federal Acquisition Regulation (FAR)); and

(iv) Otherwise successful offers where application of the factor would be inconsistent with a Memorandum of Understanding or other international agreement with a foreign government.

(2) The factor of 10 percent shall be applied on a line item basis or to any group of items on which award may be made. Other evaluation factors described in the solicitation shall be applied before application of the factor.

(3) A concern that is both a HUBZone small business concern and a small disadvantaged business concern will receive the benefit of both the HUBZone small business price evaluation preference and the small disadvantaged business price evaluation adjustment (see FAR clause 52.219-23). Each applicable price evaluation preference or adjustment shall be calculated independently against an offeror's base offer.

These individual preference amounts shall be added together to arrive at the total evaluated price for that offer.

(c) Waiver of evaluation preference. A HUBZone small business concern may elect to waive the evaluation preference, in which case the factor will be added to its offer for evaluation purposes. The agreements in paragraph (d) of this clause do not apply if the offeror has waived the evaluation preference.

___ Offeror elects to waive the evaluation preference.

(d) Agreement. A HUBZone small business concern agrees that in the performance of the contract, in the case of a contract for

(1) Services (except construction), at least 50 percent of the cost of personnel for contract performance will be spent for employees of the concern or employees of other HUBZone small business concerns;

(2) Supplies (other than procurement from a nonmanufacturer of such supplies), at least 50 percent of the cost of manufacturing, excluding the cost of materials, will be performed by the concern or other HUBZone small business concerns;

(3) General construction, at least 15 percent of the cost of the contract performance incurred for personnel will be will be spent on the concern's employees or the employees of other HUBZone small business concerns; or

(4) Construction by special trade contractors, at least 25 percent of the cost of the contract performance incurred for personnel will be spent on the concern's employees or the employees of other HUBZone small business concerns.

(e) A HUBZone joint venture agrees that in the performance of the contract, the applicable percentage specified in paragraph (d) of this clause will be performed by the HUBZone small business participant or participants.

(f) A HUBZone small business concern nonmanufacturer agrees to furnish in performing this contract only end items manufactured or produced by HUBZone small business manufacturer concerns. This paragraph does not apply in connection with construction or service contracts.

(End of clause)

52.219-8 UTILIZATION OF SMALL BUSINESS CONCERNS (OCT 2000)

(a) It is the policy of the United States that small business concerns, veteran-owned small business concerns, service-disabled veteran-owned small business concerns, HUBZone small business concerns, small disadvantaged business concerns, and women-owned small business concerns shall have the maximum practicable opportunity to participate in performing contracts let by any Federal agency, including contracts and subcontracts for subsystems, assemblies, components, and related services for major systems. It is further the policy of the United States that its prime contractors establish procedures to ensure the timely payment of amounts due pursuant to the terms of their subcontracts with small business concerns, veteran-owned small business concerns, service-disabled veteran-owned small business concerns, HUBZone small business concerns, small disadvantaged business concerns, and women-owned small business concerns.

(b) The Contractor hereby agrees to carry out this policy in the awarding of subcontracts to the fullest extent consistent with efficient contract performance. The Contractor further agrees to cooperate in any studies or surveys as may be conducted by the United States Small Business Administration or the awarding agency of the United States as may be necessary to determine the extent of the Contractor's compliance with this clause.

Definitions. As used in this contract--

HUBZone small business concern means a small business concern that appears on the List of Qualified HUBZone Small Business Concerns maintained by the Small Business Administration.

Service-disabled veteran-owned small business concern--

(1) Means a small business concern--

(i) Not less than 51 percent of which is owned by one or more service-disabled veterans or, in the case of any publicly owned business, not less than 51 percent of the stock of which is owned by one or more service-disabled veterans; and

(ii) The management and daily business operations of which are controlled by one or more service-disabled veterans or, in the case of a veteran with permanent and severe disability, the spouse or permanent caregiver of such veteran.

(2) Service-disabled veteran means a veteran, as defined in 38 U.S.C. 101(2), with a disability that is service-connected, as defined in 38 U.S.C. 101(16).

Small business concern means a small business as defined pursuant to Section 3 of the Small Business Act and relevant regulations promulgated pursuant thereto.

Small disadvantaged business concern means a small business concern that represents, as part of its offer that--

(1) It has received certification as a small disadvantaged business concern consistent with 13 CFR part 124, subpart B;

(2) No material change in disadvantaged ownership and control has occurred since its certification;

(3) Where the concern is owned by one or more individuals, the net worth of each individual upon whom the certification is based does not exceed $750,000 after taking into account the applicable exclusions set forth at 13 CFR 124.104(c)(2); and

(4) It is identified, on the date of its representation, as a certified small disadvantaged business in the database maintained by the Small Business Administration (PRO-Net).

Veteran-owned small business concern means a small business concern--

(1) Not less than 51 percent of which is owned by one or more veterans (as defined at 38 U.S.C. 101(2)) or, in the case of any publicly owned business, not less than 51 percent of the stock of which is owned by one or more veterans; and

(2) The management and daily business operations of which are controlled by one or more veterans.

Women-owned small business concern means a small business concern--

(1) That is at least 51 percent owned by one or more women, or, in the case of any publicly owned business, at least 51 percent of the stock of which is owned by one or more women; and

(2) Whose management and daily business operations are controlled by one or more women.

(d) Contractors acting in good faith may rely on written representations by their subcontractors regarding their status as a small business concern, a veteran-owned small business concern, a service-disabled veteran-owned small business concern, a HUBZone small business concern, a small disadvantaged business concern, or a women-owned small business concern.

(End of clause)

52.219-9 SMALL BUSINESS SUBCONTRACTING PLAN (JAN 2002)--ALTERNATE II (OCT 2001).

(a) This clause does not apply to small business concerns.

(b) Definitions. As used in this clause--

Commercial item means a product or service that satisfies the definition of commercial item in section 2.101 of the Federal Acquisition Regulation.

Commercial plan means a subcontracting plan (including goals) that covers the offeror's fiscal year and that applies to the entire production of commercial items sold by either the entire company or a portion thereof (e.g., division, plant, or product line).

Individual contract plan means a subcontracting plan that covers the entire contract period (including option periods), applies to a specific contract, and has goals that are based on the offeror's planned subcontracting in support of the specific contract, except that indirect costs incurred for common or joint purposes may be allocated on a prorated basis to the contract.

Master plan means a subcontracting plan that contains all the required elements of an individual contract plan, except goals, and may be incorporated into individual contract plans, provided the master plan has been approved.

Subcontract means any agreement (other than one involving an employer-employee relationship) entered into by a Federal Government prime Contractor or subcontractor calling for supplies or services required for performance of the contract or subcontract.

(c) Proposals submitted in response to this solicitation shall include a subcontracting plan that separately addresses subcontracting with small business, veteran-owner small business, HUBZone small business, small disadvantaged business, and women-owned small business concerns. If the offeror is submitting an individual contract plan, the plan must separately address subcontracting with small business, veteran-owner small business, HUBZone small business, small disadvantaged business, and women-owned small business concerns, with a separate part for the basic contract and separate parts for each option (if any). The plan shall be included in and made a part of the resultant contract. The subcontracting plan shall be negotiated within the time specified by the Contracting Officer. Failure to submit and negotiate a subcontracting plan shall make the offeror ineligible for award of a contract.

(d) The offeror's subcontracting plan shall include the following:

(1) Goals, expressed in terms of percentages of total planned subcontracting dollars, for the use of small business, veteran-owned small business, HUBZone small business, small disadvantaged business, and women-owned small business concerns as subcontractors. The offeror shall include all subcontracts that contribute to contract performance, and may include a proportionate share of products and services that are normally allocated as indirect costs.

(2) A statement of--

(i) Total dollars planned to be subcontracted for an individual contract plan; or the offeror's total projected sales, expressed in dollars, and the total value of projected subcontracts to support the sales for a commercial plan;

(ii) Total dollars planned to be subcontracted to small business concerns;

(iii) Total dollars planned to be subcontracted to veteran-owned small business concerns;

(iv) Total dollars planned to be subcontracted to HUBZone small business concerns;

(v) Total dollars planned to be subcontracted to small disadvantaged business concerns; and

(vi) Total dollars planned to be subcontracted to women-owned small business concerns.

(3) A description of the principal types of supplies and services to be subcontracted, and an identification of the types planned for subcontracting to--

(i) Small business concerns;

(ii) Veteran-owned small business concerns;

(iii) HUBZone small business concerns;

(iv) Small disadvantaged business concerns; and

(v) Women-owned small business concerns.

(4) A description of the method used to develop the subcontracting goals in paragraph (d)(1) of this clause.

(5) A description of the method used to identify potential sources for solicitation purposes (e.g., existing company source lists, the Procurement Marketing and Access Network (PRO-Net) of the Small Business Administration (SBA), veterans service organizations, the National Minority Purchasing Council Vendor Information Service, the Research and Information Division of the Minority Business Development Agency in the Department of Commerce, or small, HUBZone, small disadvantaged, and women-owned small business trade associations). A firm may rely on the information contained in PRO-Net as an accurate representation of a concern's size and ownership characteristics for the purposes of maintaining a small, veteran-owned small, HUBZone small, small disadvantaged, and women-owned small business source list. Use of PRO-Net as its source list does not relieve a firm of its responsibilities (e.g., outreach, assistance, counseling, or publicizing subcontracting opportunities) in this clause.

(6) A statement as to whether or not the offeror in included indirect costs in establishing subcontracting goals, and a description of the method used to determine the proportionate share of indirect costs to be incurred with—

(i) Small business concerns;

(ii) Veteran-owned small business concerns;

(iii) HUBZone small business concerns;

(iv) Small disadvantaged business concerns; and

(v) Women-owned small business concerns.

(7) The name of the individual employed by the offeror who will administer the offeror's subcontracting program, and a description of the duties of the individual.

(8) A description of the efforts the offeror will make to assure that small business, veteran-owned small business, HUBZone small business, small disadvantaged business and women-owned small business concerns have an equitable opportunity to compete for subcontracts.

(9) Assurances that the offeror will include the clause of this contract entitled ``Utilization of Small Business Concerns'' in all subcontracts that offer further subcontracting opportunities, and that the offeror will require all subcontractors (except small business concerns) that receive subcontracts in excess of $500,000 ($1,000,000 for construction of any public facility) to adopt a subcontracting plan that complies with the requirements of this clause.

(10) Assurances that the offeror will--

(i) Cooperate in any studies or surveys as may be required;

(ii) Submit periodic reports so that the Government can determine the extent of compliance by the offeror with the subcontracting plan;

(iii) Submit Standard Form (SF) 294, Subcontracting Report for Individual Contracts, and/or SF 295, Summary Subcontract Report, in accordance with paragraph (j) of this clause. The reports shall provide information on subcontract awards to small business concerns, veteran-owned small business concerns, service-disabled veteran-owned small business concerns, small disadvantaged business concerns, women-owned small business concerns, and Historically Black Colleges and Universities and Minority Institutions. Reporting shall be in accordance with the instructions on the forms or as provided in agency regulations.

(iv) Ensure that its subcontractors agree to submit SF 294 and SF 295.

(11) A description of the types of records that will be maintained concerning procedures that have been adopted to comply with the requirements and goals in the plan, including establishing source lists; and a description of the

offeror's efforts to locate small business, veteran-owned small business, HUBZone small business, small disadvantaged business, and women-owned small business concerns and award subcontracts to them. The records shall include at least the following (on a plant-wide or company-wide basis, unless otherwise indicated)

(i) Source lists (e.g., PRO-Net), guides, and other data that identify small business, veteran-owner small business, HUBZone small business, small disadvantaged business, and women-owned small business concerns.

(ii) Organizations contacted in an attempt to locate sources that are small business, veteran-owned small business, HUBZone small business, small disadvantaged business, or women-owned small business concerns.

(iii) Records on each subcontract solicitation resulting in an award of more than $100,000, indicating--

(A) Whether small business concerns were solicited and, if not, why not;

(B) Whether veteran-owned small business concerns were solicited and, if not, why not;

(C) Whether HUBZone small business concerns were solicited and, if not, why not;

(D) Whether small disadvantaged business concerns were solicited and, if not, why not;

(E) Whether women-owned small business concerns were solicited and, if not, why not; and

(F) If applicable, the reason award was not made to a small business concern.

(iv) Records of any outreach efforts to contact--

(A) Trade associations;

(B) Business development organizations;

(C) Conferences and trade fairs to locate small, HUBZone small, small disadvantaged, and women-owned small business sources; and

(D) Veterans service organizations.

(v) Records of internal guidance and encouragement provided to buyers through--

(A) Workshops, seminars, training, etc.; and

(B) Monitoring performance to evaluate compliance with the program's requirements.

(vi) On a contract-by-contract basis, records to support award data submitted by the offeror to the Government, including the name, address, and business size of each subcontractor. Contractors having commercial plans need not comply with this requirement.

(e) In order to effectively implement this plan to the extent consistent with efficient contract performance, the Contractor shall perform the following functions:

(1) Assist small business, veteran-owner small business, HUBZone small business, small disadvantaged business, and women-owned small business concerns by arranging solicitations, time for the preparation of bids, quantities, specifications, and delivery schedules so as to facilitate the participation by such concerns. Where the Contractor's lists of potential small business, veteran-owner small business, HUBZone small business, small disadvantaged

business, and women-owned small business subcontractors are excessively long, reasonable effort shall be made to give all such small business concerns an opportunity to compete over a period of time.

(2) Provide adequate and timely consideration of the potentialities of small business, veteran-owner small business, HUBZone small business, small disadvantaged business, and women-owned small business concerns in all ``make-or-buy'' decisions.

(3) Counsel and discuss subcontracting opportunities with representatives of small business, veteran-owner small business, HUBZone small business, small disadvantaged business, and women-owned small business firms.

(4) Provide notice to subcontractors concerning penalties and remedies for misrepresentations of business status as small, veteran-owner small business, HUBZone small, small disadvantaged, or women-owned small business for the purpose of obtaining a subcontract that is to be included as part or all of a goal contained in the Contractor's subcontracting plan.

(f) A master plan on a plant or division-wide basis that contains all the elements required by paragraph (d) of this clause, except goals, may be incorporated by reference as a part of the subcontracting plan required of the offeror by this clause; provided--
(1) the master plan has been approved, (2) the offeror ensures that the master plan is updated as necessary and provides copies of the approved master plan, including evidence of its approval, to the Contracting Officer, and (3) goals and any deviations from the master plan deemed necessary by the Contracting Officer to satisfy the requirements of this contract are set forth in the individual subcontracting plan.

(g) A commercial plan is the preferred type of subcontracting plan for contractors furnishing commercial items. The commercial plan shall relate to the offeror's planned subcontracting generally, for both commercial and Government business, rather than solely to the Government contract. Commercial plans are also preferred for subcontractors that provide commercial items under a prime contract, whether or not the prime contractor is supplying a commercial item.

(h) Prior compliance of the offeror with other such subcontracting plans under previous contracts will be considered by the Contracting Officer in determining the responsibility of the offeror for award of the contract.

(i) The failure of the Contractor or subcontractor to comply in good faith with (1) the clause of this contract entitled "Utilization Of Small Business Concerns," or (2) an approved plan required by this clause, shall be a material breach of the contract.

(j) The Contractor shall submit the following reports:

(1) Standard Form 294, Subcontracting Report for Individual Contracts. This report shall be submitted to the Contracting Officer semiannually and at contract completion. The report covers subcontract award data related to this contract. This report is not required for commercial plans.

(2) Standard Form 295, Summary Subcontract Report. This report encompasses all of the contracts with the awarding agency. It must be submitted semi-annually for contracts with the Department of Defense and annually for contracts with civilian agencies. If the reporting activity is covered by a commercial plan, the reporting activity must report annually all subcontract awards under that plan. All reports submitted at the close of each fiscal year (both individual and commercial plans) shall include a breakout, in the Contractor's format, of subcontract awards, in whole dollars, to small disadvantaged business concerns by North American Industry Classification System (NAICS) Industry Subsector. For a commercial plan, the Contractor may obtain from each of its subcontractors a predominant NAICS Industry Subsector and report all awards to that subcontractor under its predominant NAICS Industry Subsector.

(End of clause)

52.219-16 LIQUIDATED DAMAGES-SUBCONTRACTING PLAN (JAN 1999)

(a) Failure to make a good faith effort to comply with the subcontracting plan, as used in this clause, means a willful or intentional failure to perform in accordance with the requirements of the subcontracting plan approved under the clause in this contract entitled "Small Business Subcontracting Plan," or willful or intentional action to frustrate the plan.

(b) Performance shall be measured by applying the percentage goals to the total actual subcontracting dollars or, if a commercial plan is involved, to the pro rata share of actual subcontracting dollars attributable to Government contracts covered by the commercial plan. If, at contract completion or, in the case of a commercial plan, at the close of the fiscal year for which the plan is applicable, the Contractor has failed to meet its subcontracting goals and the Contracting Officer decides in accordance with paragraph (c) of this clause that the Contractor failed to make a good faith effort to comply with its subcontracting plan, established in accordance with the clause in this contract entitled “Small Business Subcontracting Plan,” the Contractor shall pay the Government liquidated damages in an amount stated. The amount of probable damages attributable to the Contractor's failure to comply shall be an amount equal to the actual dollar amount by which the Contractor failed to achieve each subcontract goal.

(c) Before the Contracting Officer makes a final decision that the Contractor has failed to make such good faith effort, the Contracting Officer shall give the Contractor written notice specifying the failure and permitting the Contractor to demonstrate what good faith efforts have been made and to discuss the matter. Failure to respond to the notice may be taken as an admission that no valid explanation exists. If, after consideration of all the pertinent data, the Contracting Officer finds that the Contractor failed to make a good faith effort to comply with the subcontracting plan, the Contracting Officer shall issue a final decision to that effect and require that the Contractor pay the Government liquidated damages as provided in paragraph (b) of this clause.

(d) With respect to commercial plans, the Contracting Officer who approved the plan will perform the functions of the Contracting Officer under this clause on behalf of all agencies with contracts covered by the commercial plan.

(e) The Contractor shall have the right of appeal, under the clause in this contract entitled Disputes, from any final decision of the Contracting Officer.

(f) Liquidated damages shall be in addition to any other remedies that the Government may have.

(End of clause)

52.222-3 CONVICT LABOR (AUG 1996)

The Contractor agrees not to employ in the performance of this contract any person undergoing a sentence of imprisonment which has been imposed by any court of a State, the District of Columbia, the Commonwealth of Puerto Rico, the Virgin Islands, Guam, American Samoa, the Commonwealth of the Northern Mariana Islands, or the Trust Territory of the Pacific Islands. This limitation, however, shall not prohibit the employment by the Contractor in the performance of this contract of persons on parole or probation to work at paid employment during the term of their sentence or persons who have been pardoned or who have served their terms. Nor shall it prohibit the employment by the Contractor in the performance of this contract of persons confined for violation of the laws of any of the States, the District of Columbia, the Commonwealth of Puerto Rico, the Virgin Islands, Guam, American Samoa, the Commonwealth of the Northern Mariana Islands, or the Trust Territory of the Pacific Islands who are authorized to work at paid employment in the community under the laws of such jurisdiction, if--

(a)(1) The worker is paid or is in an approved work training program on a voluntary basis;

(2) Representatives of local union central bodies or similar labor union organizations have been consulted;

(3) Such paid employment will not result in the displacement of employed workers, or be applied in skills, crafts, or trades in which there is a surplus of available gainful labor in the locality, or impair existing contracts for services; and

(4) The rates of pay and other conditions of employment will not be less than those paid or provided for work of a similar nature in the locality in which the work is being performed; and

(b) The Attorney General of the United States has certified that the work-release laws or regulations of the jurisdiction involved are in conformity with the requirements of Executive Order 11755, as amended by Executive Orders 12608 and 12943.

(End of clause)

52.222-4 CONTRACT WORK HOURS AND SAFETY STANDARDS ACT - OVERTIME COMPENSATION. (SEP 2000)

(a) Overtime requirements. No Contractor or subcontractor employing laborers or mechanics (see Federal Acquisition Regulation 22.300) shall require or permit them to work over 40 hours in any workweek unless they are paid at least 1 and 1/2 times the basic rate of pay for each hour worked over 40 hours.

(b) Violation; liability for unpaid wages; liquidated damages. The responsible Contractor and subcontractor are liable for unpaid wages if they violate the terms in paragraph (a) of this clause. In addition, the Contractor and subcontractor are liable for liquidated damages payable to the Government. The Contracting Officer will assess liquidated damages at the rate of $10 per affected employee for each calendar day on which the employer required or permitted the employee to work in excess of the standard workweek of 40 hours without paying overtime wages required by the Contract Work Hours and Safety Standards Act.

(c) Withholding for unpaid wages and liquidated damages. The Contracting Officer will withhold from payments due under the contract sufficient funds required to satisfy any Contractor or subcontractor liabilities for unpaid wages and liquidated damages. If amounts withheld under the contract are insufficient to satisfy Contractor or subcontractor liabilities, the Contracting Officer will withhold payments from other Federal or Federally assisted contracts held by the same Contractor that are subject to the Contract Work Hours and Safety Standards Act.

(d) Payrolls and basic records.

(1) The Contractor and its subcontractors shall maintain payrolls and basic payroll records for all laborers and mechanics working on the contract during the contract and shall make them available to the Government until 3 years after contract completion. The records shall contain the name and address of each employee, social security number, labor classifications, hourly rates of wages paid, daily and weekly number of hours worked, deductions made, and actual wages paid. The records need not duplicate those required for construction work by Department of Labor regulations at 29 CFR 5.5(a)(3) implementing the Davis-Bacon Act.

(2) The Contractor and its subcontractors shall allow authorized representatives of the Contracting Officer or the Department of Labor to inspect, copy, or transcribe records maintained under paragraph (d)(1) of this clause. The Contractor or subcontractor also shall allow authorized representatives of the Contracting Officer or Department of Labor to interview employees in the workplace during working hours.

(e) Subcontracts. The Contractor shall insert the provisions set forth in paragraphs (a) through (d) of this clause in subcontracts exceeding $100,000 and require subcontractors to include these provisions in any lower tier subcontracts. The Contractor shall be responsible for compliance by any subcontractor or lower-tier subcontractor with the provisions set forth in paragraphs (a) through (d) of this clause.

(End of clause)

52.222-6 DAVIS-BACON ACT (FEB 1995)

(a) All laborers and mechanics employed or working upon the site of the work will be paid unconditionally and not less often than once a week, and without subsequent deduction or rebate on any account (except such payroll deductions as are permitted by regulations issued by the Secretary of Labor under the Copeland Act (29 CFR Part 3), the full amount of wages and bona fide fringe benefits (or cash equivalents thereof) due at time of payment computed at rates not less than those contained in the wage determination of the Secretary of Labor which is attached hereto and made a part hereof, regardless of any contractual relationship which may be alleged to exist between the Contractor and such laborers and mechanics. Contributions made or costs reasonably anticipated for bona fide fringe benefits under section 1(b)(2) of the Davis-Bacon Act on behalf of laborers or mechanics are considered wages paid to such laborers or mechanics, subject to the provisions of paragraph (d) of this clause; also, regular contributions made or costs incurred for more than a weekly period (but not less often than quarterly) under plans, funds, or programs which cover the particular weekly period, are deemed to be constructively made or incurred during such period. Such laborers and mechanics shall be paid not less than the appropriate wage rate and fringe benefits in the wage determination for the classification of work actually performed, without regard to skill, except as provided in the clause entitled Apprentices and Trainees. Laborers or mechanics performing work in more than one classification may be compensated at the rate specified for each classification for the time actually worked therein; provided, That the employer's payroll records accurately set forth the time spent in each classification in which work is performed. The wage determination (including any additional classifications and wage rates conformed under paragraph (b) of this clause) and the Davis-Bacon poster (WH-1321) shall be posted at all times by the Contractor and its subcontractors at the site of the work in a prominent and accessible place where it can be easily seen by the workers.

(b)(1) The Contracting Officer shall require that any class of laborers or mechanics which is not listed in the wage determination and which is to be employed under the contract shall be classified in conformance with the wage determination. The Contracting Officer shall approve an additional classification and wage rate and fringe benefits therefor only when all the following criteria have been met:

(i) The work to be performed by the classification requested is not performed by a classification in the wage determination.

(ii) The classification is utilized in the area by the construction industry.

(iii) The proposed wage rate, including any bona fide fringe benefits, bears a reasonable relationship to the wage rates contained in the wage determination.

(2) If the Contractor and the laborers and mechanics to be employed in the classification (if known), or their representatives, and the Contracting Officer agree on the classification and wage rate (including the amount designated for fringe benefits, where appropriate), a report of the action taken shall be sent by the Contracting Officer to the Administrator of the Wage and Hour Division, Employment Standards Administration, U.S. Department of Labor, Washington, DC 20210. The Administrator or an authorized representative will approve, modify, or disapprove every additional classification action within 30 days of receipt and so advise the Contracting Officer or will notify the Contracting Officer within the 30-day period that additional time is necessary.

(3) In the event the Contractor, the laborers or mechanics to be employed in the classification, or their representatives, and the Contracting Officer do not agree on the proposed classification and wage rate (including the amount designated for fringe benefits, where appropriate), the Contracting Officer shall refer the questions, including the views of all interested parties and the recommendation of the Contracting Officer, to the Administrator of the

Wage and Hour Division for determination. The Administrator, or an authorized representative, will issue a determination within 30 days of receipt and so advise the Contracting Officer or will notify the Contracting Officer within the 30-day period that additional time is necessary.

(4) The wage rate (including fringe benefits, where appropriate) determined pursuant to subparagraphs (b)(2) and (b)(3) of this clause shall be paid to all workers performing work in the classification under this contract from the first day on which work is performed in the classification.

(c) Whenever the minimum wage rate prescribed in the contract for a class of laborers or mechanics includes a fringe benefit which is not expressed as an hourly rate, the Contractor shall either pay the benefit as stated in the wage determination or shall pay another bona fide fringe benefit or an hourly cash equivalent thereof.

(d) If the Contractor does not make payments to a trustee or other third person, the Contractor may consider as part of the wages of any laborer or mechanic the amount of any costs reasonably anticipated in providing bona fide fringe benefits under a plan or program; provided, That the Secretary of Labor has found, upon the written request of the Contractor, that the applicable standards of the Davis-Bacon Act have been met. The Secretary of Labor may require the Contractor to set aside in a separate account assets for the meeting of obligations under the plan or program.

(End of clause)

52.222-7 WITHHOLDING OF FUNDS (FEB 1988)

The Contracting Officer shall, upon his or her own action or upon written request of an authorized representative of the Department of Labor, withhold or cause to be withheld from the Contractor under this contract or any other Federal contract with the same Prime Contractor, or any other Federally assisted contract subject to Davis-Bacon prevailing wage requirements, which is held by the same Prime Contractor, so much of the accrued payments or advances as may be considered necessary to pay laborers and mechanics, including apprentices, trainees, and helpers, employed by the Contractor or any subcontractor the full amount of wages required by the contract. In the event of failure to pay any laborer or mechanic, including any apprentice, trainee, or helper, employed or working on the site of the work, all or part of the wages required by the contract, the Contracting Officer may, after written notice to the Contractor, take such action as may be necessary to cause the suspension of any further payment, advance, or guarantee of funds until such violations have ceased.

(End of clause)

52.222-8 PAYROLLS AND BASIC RECORDS (FEB 1988)

(a) Payrolls and basic records relating thereto shall be maintained by the Contractor during the course of the work and preserved for a period of 3 years thereafter for all laborers and mechanics working at the site of the work. Such records shall contain the name, address, and social security number of each such worker, his or her correct classification, hourly rates of wages paid (including rates of contributions or costs anticipated for bona fide fringe benefits or cash equivalents thereof of the types described in section 1(b)(2)(B) of the Davis-Bacon Act), daily and weekly number of hours worked, deductions made, and actual wages paid. Whenever the Secretary of Labor has found, under paragraph (d) of the clause entitled Davis-Bacon Act, that the wages of any laborer or mechanic include the amount of any costs reasonably anticipated in providing benefits under a plan or program described in section 1(b)(2)(B) of the Davis-Bacon Act, the Contractor shall maintain records which show that the commitment to provide such benefits is enforceable, that the plan or program is financially responsible, and that the plan or program has been communicated in writing to the laborers or mechanics affected, and records which show the costs anticipated or the actual cost incurred in providing such benefits. Contractors employing apprentices or trainees under approved

programs shall maintain written evidence of the registration of apprenticeship programs and certification of trainee programs, the registration of the apprentices and trainees, and the ratios and wage rates prescribed in the applicable programs.

(b)(1) The Contractor shall submit weekly for each week in which any contract work is performed a copy of all payrolls to the Contracting Officer. The payrolls submitted shall set out accurately and completely all of the information required to be maintained under paragraph (a) of this clause. This information may be submitted in any form desired. Optional Form WH-347 (Federal Stock Number 029-005-00014-1) is available for this purpose and may be purchased from the Superintendent of Documents, U.S. Government Printing Office, Washington, DC 20402. The Prime Contractor is responsible for the submission of copies of payrolls by all subcontractors.

(2) Each payroll submitted shall be accompanied by a "Statement of Compliance," signed by the Contractor or subcontractor or his or her agent who pays or supervises the payment of the persons employed under the contract and shall certify--

(i) That the payroll for the payroll period contains the information required to be maintained under paragraph (a) of this clause and that such information is correct and complete;

(ii) That each laborer or mechanic (including each helper, apprentice, and trainee) employed on the contract during the payroll period has been paid the full weekly wages earned, without rebate, either directly or indirectly, and that no deductions have been made either directly or indirectly from the full wages earned, other than permissible deductions as set forth in the Regulations, 29 CFR Part 3; and

(iii) That each laborer or mechanic has been paid not less than the applicable wage rates and fringe benefits or cash equivalents for the classification of work performed, as specified in the applicable wage determination incorporated into the contract.

(3) The weekly submission of a properly executed certification set forth on the reverse side of Optional Form WH-347 shall satisfy the requirement for submission of the "Statement of Compliance" required by subparagraph (b)(2) of this clause.

(4) The falsification of any of the certifications in this clause may subject the Contractor or subcontractor to civil or criminal prosecution under Section 1001 of Title 18 and Section 3729 of Title 31 of the United States Code.

(c) The Contractor or subcontractor shall make the records required under paragraph (a) of this clause available for inspection, copying, or transcription by the Contracting Officer or authorized representatives of the Contracting Officer or the Department of Labor. The Contractor or subcontractor shall permit the Contracting Officer or representatives of the Contracting Officer or the Department of Labor to interview employees during working hours on the job. If the Contractor or subcontractor fails to submit required records or to make them available, the Contracting Officer may, after written notice to the Contractor, take such action as may be necessary to cause the suspension of any further payment. Furthermore, failure to submit the required records upon request or to make such records available may be grounds for debarment action pursuant to 29 CFR 5.12.

(End of clause)

52.222-9 APPRENTICES AND TRAINEES (FEB 1988)

(a) Apprentices. Apprentices will be permitted to work at less than the predetermined rate for the work they performed when they are employed pursuant to and individually registered in a bona fide apprenticeship program registered with the U.S. Department of Labor, Employment and Training Administration, Bureau of Apprenticeship and Training, or with a State Apprenticeship Agency recognized by the Bureau, or if a person is employed in his or

her first 90 days of probationary employment as an apprentice in such an apprenticeship program, who is not individually registered in the program, but who has been certified by the Bureau of Apprenticeship and Training or a State Apprenticeship Agency (where appropriate) to be eligible for probationary employment as an apprentice. The allowable ratio of apprentices to journeymen on the job site in any craft classification shall not be greater than the ratio permitted to the Contractor as to the entire work force under the registered program. Any worker listed on a payroll at an apprentice wage rate, who is not registered or otherwise employed as stated in this paragraph, shall be paid not less than the applicable wage determination for the classification of work actually performed. In addition, any apprentice performing work on the job site in excess of the ratio permitted under the registered program shall be paid not less than the applicable wage rate on the wage determination for the work actually performed. Where a contractor is performing construction on a project in a locality other than that in which its program is registered, the ratios and wage rates (expressed in percentages of the journeyman's hourly rate) specified in the Contractor's or subcontractor's registered program shall be observed. Every apprentice must be paid at not less than the rate specified in the registered program for the apprentice's level of progress, expressed as a percentage of the journeyman hourly rate specified in the applicable wage determination. Apprentices shall be paid fringe benefits in accordance with the provisions of the apprenticeship program. If the apprenticeship program does not specify fringe benefits, apprentices must be paid the full amount of fringe benefits listed on the wage determination for the applicable classification. If the Administrator determines that a different practice prevails for the applicable apprentice classification, fringes shall be paid in accordance with that determination. In the event the Bureau of Apprenticeship and Training, or a State Apprenticeship Agency recognized by the Bureau, withdraws approval of an apprenticeship program, the Contractor will no longer be permitted to utilize apprentices at less than the applicable predetermined rate for the work performed until an acceptable program is approved.

(b) Trainees. Except as provided in 29 CFR 5.16, trainees will not be permitted to work at less than the predetermined rate for the work performed unless they are employed pursuant to and individually registered in a program which has received prior approval, evidenced by formal certification by the U.S. Department of Labor, Employment and Training Administration. The ratio of trainees to journeymen on the job site shall not be greater than permitted under the plan approved by the Employment and Training Administration. Every trainee must be paid at not less than the rate specified in the approved program for the trainee's level of progress, expressed as a percentage of the journeyman hourly rate specified in the applicable wage determination. Trainees shall be paid fringe benefits in accordance with the provisions of the trainee program. If the trainee program does not mention fringe benefits, trainees shall be paid the full amount of fringe benefits listed in the wage determination unless the Administrator of the Wage and Hour Division determines that there is an apprenticeship program associated with the corresponding journeyman wage rate in the wage determination which provides for less than full fringe benefits for apprentices. Any employee listed on the payroll at a trainee rate who is not registered and participating in a training plan approved by the Employment and Training Administration shall be paid not less than the applicable wage rate in the wage determination for the classification of work actually performed. In addition, any trainee performing work on the job site in excess of the ratio permitted under the registered program shall be paid not less than the applicable wage rate in the wage determination for the work actually performed. In the event the Employment and Training Administration withdraws approval of a training program, the Contractor will no longer be permitted to utilize trainees at less than the applicable predetermined rate for the work performed until an acceptable program is approved.

(c) Equal employment opportunity. The utilization of apprentices, trainees, and journeymen under this clause shall be in conformity with the equal employment opportunity requirements of Executive Order 11246, as amended, and 29 CFR Part 30.

(End of clause)

52.222-10 COMPLIANCE WITH COPELAND ACT REQUIREMENTS (FEB 1988)

The Contractor shall comply with the requirements of 29 CFR Part 3, which are hereby incorporated by reference in this contract.

(End of clause)

52.222-11 SUBCONTRACTS (LABOR STANDARDS (FEB 1988)

(a) The Contractor or subcontractor shall insert in any subcontracts the clauses entitled Davis-Bacon Act, Contract Work Hours and Safety Standards Act-Overtime Compensation, Apprentices and Trainees, Payrolls and Basic Records, Compliance with Copeland Act Requirements, Withholding of Funds, Subcontracts (Labor Standards), Contract Termination-Debarment, Disputes Concerning Labor Standards, Compliance with Davis-Bacon and Related Act Regulations, and Certification of Eligibility, and such other clauses as the Contracting Officer may, by appropriate instructions, require, and also a clause requiring subcontractors to include these clauses in any lower tier subcontracts. The Prime Contractor shall be responsible for compliance by any subcontractor or lower tier subcontractor with all the contract clauses cited in this paragraph.

(b)(1) Within 14 days after award of the contract, the Contractor shall deliver to the Contracting Officer a completed Statement and Acknowledgment Form (SF 1413) for each subcontract, including the subcontractor's signed and dated acknowledgment that the clauses set forth in paragraph (a) of this clause have been included in the subcontract.

(2) Within 14 days after the award of any subsequently awarded subcontract the Contractor shall deliver to the Contracting Officer an updated completed SF 1413 for such additional subcontract.

(End of clause)

52.222-12 CONTRACT TERMINATION--DEBARMENT (FEB 1988)

A breach of the contract clauses entitled Davis-Bacon Act, Contract Work Hours and Safety Standards Act--Overtime Compensation, Apprentices and Trainees, Payrolls and Basic Records, Compliance with Copeland Act Requirements, Subcontracts (Labor Standards), Compliance with Davis-Bacon and Related Act Regulations, or Certification of Eligibility may be grounds for termination of the contract, and for debarment as a Contractor and subcontractor as provided in 29 CFR 5.12.

(End of clause)

52.222-13 COMPLIANCE WITH DAVIS-BACON AND RELATED ACT REGULATIONS (FEB 1988)

All rulings and interpretations of the Davis-Bacon and Related Acts contained in 29 CFR Parts 1, 3, and 5 are hereby incorporated by reference in this contract.

(End of clause)

52.222-14 DISPUTES CONCERNING LABOR STANDARDS (FEB 1988)

The United States Department of Labor has set forth in 29 CFR Parts 5, 6, and 7 procedures for resolving disputes concerning labor standards requirements. Such disputes shall be resolved in accordance with those procedures and

not the Disputes clause of this contract. Disputes within the meaning of this clause include disputes between the Contractor (or any of its subcontractors) and the contracting agency, the U.S. Department of Labor, or the employees or their representatives.

(End of clause)

52.222-15 CERTIFICATION OF ELIGIBILITY (FEB 1988)

(a) By entering into this contract, the Contractor certifies that neither it (nor he or she) nor any person or firm who has an interest in the Contractor's firm is a person or firm ineligible to be awarded Government contracts by virtue of section 3(a) of the Davis-Bacon Act or 29 CFR 5.12(a)(1).

(b) No part of this contract shall be subcontracted to any person or firm ineligible for award of a Government contract by virtue of section 3(a) of the Davis-Bacon Act or 29 CFR 5.12(a)(1).

(c) The penalty for making false statements is prescribed in the U.S. Criminal Code, 18 U.S.C. 1001.

(End of clause)

52.222-21 PROHIBITION OF SEGREGATED FACILITIES (FEB 1999)

(a) Segregated facilities, as used in this clause, means any waiting rooms, work areas, rest rooms and wash rooms, restaurants and other eating areas, time clocks, locker rooms and other storage or dressing areas, parking lots, drinking fountains, recreation or entertainment areas, transportation, and housing facilities provided for employees, that are segregated by explicit directive or are in fact segregated on the basis of race, color, religion, sex, or national origin because of written or oral policies or employee custom. The term does not include separate or single-user rest rooms or necessary dressing or sleeping areas provided to assure privacy between the sexes.

(b) The Contractor agrees that it does not and will not maintain or provide for its employees any segregated facilities at any of its establishments, and that it does not and will not permit its employees to perform their services at any location under its control where segregated facilities are maintained. The Contractor agrees that a breach of this clause is a violation of the Equal Opportunity clause in this contract.

(c) The Contractor shall include this clause in every subcontract and purchase order that is subject to the Equal Opportunity clause of this contract.

(End of clause)

52.222-26 EQUAL OPPORTUNITY (APR 2002)

(a) Definition. United States, as used in this clause, means the 50 States, the District of Columbia, Puerto Rico, the Northern Mariana Islands, American Samoa, Guam, the U.S. Virgin Islands, and Wake Island.

(b) If, during any 12-month period (including the 12 months preceding the award of this contract), the Contractor has been or is awarded nonexempt Federal contracts and/or subcontracts that have an aggregate value in excess of $10,000, the Contractor shall comply with paragraphs (b)(1) through (b)(11) of this clause, except for work performed

outside the United States by employees who were not recruited within the United States. Upon request, the Contractor shall provide information necessary to determine the applicability of this clause.

(1) The Contractor shall not discriminate against any employee or applicant for employment because of race, color, religion, sex, or national origin. However, it shall not be a violation of this clause for the Contractor to extend a publicly announced preference in employment to Indians living on or near an Indian reservation, in connection with employment opportunities on or near an Indian reservation, as permitted by 41 CFR 60-1.5.

(2) The Contractor shall take affirmative action to ensure that applicants are employed, and that employees are treated during employment, without regard to their race, color, religion, sex, or national origin. This shall include, but not be limited to, (i) employment, (ii) upgrading, (iii) demotion, (iv) transfer, (v) recruitment or recruitment advertising, (vi) layoff or termination, (vii) rates of pay or other forms of compensation, and (viii) selection for training, including apprenticeship.

(3) The Contractor shall post in conspicuous places available to employees and applicants for employment the notices to be provided by the Contracting Officer that explain this clause.

(4) The Contractor shall, in all solicitations or advertisements for employees placed by or on behalf of the Contractor, state that all qualified applicants will receive consideration for employment without regard to race, color, religion, sex, or national origin.

(5) The Contractor shall send, to each labor union or representative of workers with which it has a collective bargaining agreement or other contract or understanding, the notice to be provided by the Contracting Officer advising the labor union or workers' representative of the Contractor's commitments under this clause, and post copies of the notice in conspicuous places available to employees and applicants for employment.

(6) The Contractor shall comply with Executive Order 11246, as amended, and the rules, regulations, and orders of the Secretary of Labor.

(7) The Contractor shall furnish to the contracting agency all information required by Executive Order 11246, as amended, and by the rules, regulations, and orders of the Secretary of Labor. The Contractor shall also file Standard Form 100 (EEO-1), or any successor form, as prescribed in 41 CFR part 60-1. Unless the Contractor has filed within the 12 months preceding the date of contract award, the Contractor shall, within 30 days after contract award, apply to either the regional Office of Federal Contract Compliance Programs (OFCCP) or the local office of the Equal Employment Opportunity Commission for the necessary forms.

(8) The Contractor shall permit access to its premises, during normal business hours, by the contracting agency or the OFCCP for the purpose of conducting on-site compliance evaluations and complaint investigations. The Contractor shall permit the Government to inspect and copy any books, accounts, records (including computerized records), and other material that may be relevant to the matter under investigation and pertinent to compliance with Executive Order 11246, as amended, and rules and regulations that implement the Executive Order.

(9) If the OFCCP determines that the Contractor is not in compliance with this clause or any rule, regulation, or order of the Secretary of Labor, this contract may be canceled, terminated, or suspended in whole or in part and the Contractor may be declared ineligible for further Government contracts, under the procedures authorized in Executive Order 11246, as amended. In addition, sanctions may be imposed and remedies invoked against the Contractor as provided in Executive Order 11246, as amended; in the rules, regulations, and orders of the Secretary of Labor; or as otherwise provided by law.

(10) The Contractor shall include the terms and conditions of subparagraphs (b)(1) through (11) of this clause in every subcontract or purchase order that is not exempted by the rules, regulations, or orders of the Secretary of Labor issued under Executive Order 11246, as amended, so that these terms and conditions will be binding upon each subcontractor or vendor.

(11) The Contractor shall take such action with respect to any subcontract or purchase order as the contracting officer may direct as a means of enforcing these terms and conditions, including sanctions for noncompliance; provided, that if the Contractor becomes involved in, or is threatened with, litigation with a subcontractor or vendor as a result of any direction, the Contractor may request the United States to enter into the litigation to protect the interests of the United States.

(c) Notwithstanding any other clause in this contract, disputes relative to this clause will be governed by the procedures in 41 CFR 60-1.1.

(End of clause)

52.222-27 AFFIRMATIVE ACTION COMPLIANCE REQUIREMENTS FOR CONSTRUCTION (FEB 1999)

(a) Definitions. "Covered area," as used in this clause, means the geographical area described in the solicitation for this contract.

"Deputy Assistant Secretary," as used in this clause, means Deputy Assistant Secretary for Federal Contract Compliance, U.S. Department of Labor, or a designee.

"Employer's identification number," as used in this clause, means the Federal Social Security number used on the employer's quarterly federal tax return, U.S. Treasury Department Form 941.

"Minority," as used in this clause, means--

(1) American Indian or Alaskan Native (all persons having origins in any of the original peoples of North America and maintaining identifiable tribal affiliations through membership and participation or community identification).

(2) Asian and Pacific Islander (all persons having origins in any of the original peoples of the Far East, Southeast Asia, the Indian Subcontinent, or the Pacific Islands);

(3) Black (all persons having origins in any of the black African racial groups not of Hispanic origin); and

(4) Hispanic (all persons of Mexican, Puerto Rican, Cuban, Central or South American, or other Spanish culture or origin, regardless of race).

(b) If the Contractor, or a subcontractor at any tier, subcontracts a portion of the work involving any construction trade, each such subcontract in excess of $10,000 shall include this clause and the Notice containing the goals for minority and female participation stated in the solicitation for this contract.

(c) If the Contractor is participating in a Hometown Plan (41 CFR 60-4) approved by the U.S. Department of Labor in a covered area, either individually or through an association, its affirmative action obligations on all work in the plan area (including goals) shall comply with the plan for those trades that have unions participating in the plan. Contractors must be able to demonstrate participation in, and compliance with, the provisions of the plan. Each Contractor or subcontractor participating in an approved plan is also required to comply with its obligations under the Equal Opportunity clause, and to make a good faith effort to achieve each goal under the plan in each trade in which it has employees. The overall good-faith performance by other Contractors or subcontractors toward a goal in an approved plan does not excuse any Contractor's or subcontractor's failure to make good-faith efforts to achieve the plan's goals.

(d) The Contractor shall implement the affirmative action procedures in subparagraphs (g)(1) through (16) of this

clause. The goals stated in the solicitation for this contract are expressed as percentages of the total hours of employment and training of minority and female utilization that the Contractor should reasonably be able to achieve in each construction trade in which it has employees in the covered area. If the Contractor performs construction work in a geographical area located outside of the covered area, it shall apply the goals established for the geographical area where that work is actually performed. The Contractor is expected to make substantially uniform progress toward its goals in each craft.

(e) Neither the terms and conditions of any collective bargaining agreement, nor the failure by a union with which the Contractor has a collective bargaining agreement, to refer minorities or women shall excuse the Contractor's obligations under this clause, Executive Order 11246, as amended, or the regulations thereunder.

(f) In order for the nonworking training hours of apprentices and trainees to be counted in meeting the goals, apprentices and trainees must be employed by the Contractor during the training period, and the Contractor must have made a commitment to employ the apprentices and trainees at the completion of their training, subject to the availability of employment opportunities. Trainees must be trained pursuant to training programs approved by the U.S. Department of Labor.

(g) The Contractor shall take affirmative action to ensure equal employment opportunity. The evaluation of the Contractor's compliance with this clause shall be based upon its effort to achieve maximum results from its actions. The Contractor shall document these efforts fully and implement affirmative action steps at least as extensive as the following:

(1) Ensure a working environment free of harassment, intimidation, and coercion at all sites and in all facilities where the Contractor's employees are assigned to work. The Contractor, if possible, will assign two or more women to each construction project. The Contractor shall ensure that foremen, superintendents, and other onsite supervisory personnel are aware of and carry out the Contractor's obligation to maintain such a working environment, with specific attention to minority or female individuals working at these sites or facilities.

(2) Establish and maintain a current list of sources for minority and female recruitment. Provide written notification to minority and female recruitment sources and community organizations when the Contractor or its unions have employment opportunities available, and maintain a record of the organizations' responses.

(3) Establish and maintain a current file of the names, addresses, and telephone numbers of each minority and female off-the-street applicant, referrals of minorities or females from unions, recruitment sources, or community organizations, and the action taken with respect to each individual. If an individual was sent to the union hiring hall for referral and not referred back to the Contractor by the union or, if referred back, not employed by the Contractor, this shall be documented in the file, along with whatever additional actions the Contractor may have taken.

(4) Immediately notify the Deputy Assistant Secretary when the union or unions with which the Contractor has a collective bargaining agreement has not referred back to the Contractor a minority or woman sent by the Contractor, or when the Contractor has other information that the union referral process has impeded the Contractor's efforts to meet its obligations.

(5) Develop on-the-job training opportunities and/or participate in training programs for the area that expressly include minorities and women, including upgrading programs and apprenticeship and trainee programs relevant to the Contractor's employment needs, especially those programs funded or approved by the Department of Labor. The Contractor shall provide notice of these programs to the sources compiled under subparagraph (g)(2) of this clause.

(6) Disseminate the Contractor's equal employment policy by--

(i) Providing notice of the policy to unions and to training, recruitment, and outreach programs, and requesting their cooperation in assisting the Contractor in meeting its contract obligations;

(ii) Including the policy in any policy manual and in collective bargaining agreements;

(iii) Publicizing the policy in the company newspaper, annual report, etc.;

(iv) Reviewing the policy with all management personnel and with all minority and female employees at least once a year; and

(v) Posting the policy on bulletin boards accessible to employees at each location where construction work is performed.

(7) Review, at least annually, the Contractor's equal employment policy and affirmative action obligations with all employees having responsibility for hiring, assignment, layoff, termination, or other employment decisions. Conduct review of this policy with all on-site supervisory personnel before initiating construction work at a job site. A written record shall be made and maintained identifying the time and place of these meetings, persons attending, subject matter discussed, and disposition of the subject matter.

(8) Disseminate the Contractor's equal employment policy externally by including it in any advertising in the news media, specifically including minority and female news media. Provide written notification to, and discuss this policy with, other Contractors and subcontractors with which the Contractor does or anticipates doing business.

(9) Direct recruitment efforts, both oral and written, to minority, female, and community organizations, to schools with minority and female students, and to minority and female recruitment and training organizations serving the Contractor's recruitment area and employment needs. Not later than 1 month before the date for acceptance of applications for apprenticeship or training by any recruitment source, send written notification to organizations such as the above, describing the openings, screening procedures, and tests to be used in the selection process.

(10) Encourage present minority and female employees to recruit minority persons and women. Where reasonable, provide after-school, summer, and vacation employment to minority and female youth both on the site and in other areas of the Contractor's workforce.

(11) Validate all tests and other selection requirements where required under 41 CFR 60-3.

(12) Conduct, at least annually, an inventory and evaluation at least of all minority and female personnel for promotional opportunities. Encourage these employees to seek or to prepare for, through appropriate training, etc., opportunities for promotion.

(13) Ensure that seniority practices, job classifications, work assignments, and other personnel practices do not have a discriminatory effect by continually monitoring all personnel and employment-related activities to ensure that the Contractor's obligations under this contract are being carried out.

(14) Ensure that all facilities and company activities are nonsegregated except that separate or single-user rest rooms and necessary dressing or sleeping areas shall be provided to assure privacy between the sexes.

(15) Maintain a record of solicitations for subcontracts for minority and female construction contractors and suppliers, including circulation of solicitations to minority and female contractor associations and other business associations.

(16) Conduct a review, at least annually, of all supervisors' adherence to and performance under the Contractor's equal employment policy and affirmative action obligations.

(h) The Contractor is encouraged to participate in voluntary associations that may assist in fulfilling one or more of the affirmative action obligations contained in subparagraphs (g)(1) through (16) of this clause. The efforts of a

contractor association, joint contractor-union, contractor-community, or similar group of which the contractor is a member and participant may be asserted as fulfilling one or more of its obligations under subparagraphs (g)(1) through (16) of this clause, provided the Contractor--

(1) Actively participates in the group;

(2) Makes every effort to ensure that the group has a positive impact on the employment of minorities and women in the industry;

(3) Ensures that concrete benefits of the program are reflected in the Contractor's minority and female workforce participation;

(4) Makes a good-faith effort to meet its individual goals and timetables; and

(5) Can provide access to documentation that demonstrates the effectiveness of actions taken on behalf of the Contractor. The obligation to comply is the Contractor's, and failure of such a group to fulfill an obligation shall not be a defense for the Contractor's noncompliance.

(i) A single goal for minorities and a separate single goal for women shall be established. The Contractor is required to provide equal employment opportunity and to take affirmative action for all minority groups, both male and female, and all women, both minority and nonminority. Consequently, the Contractor may be in violation of Executive Order 11246, as amended, if a particular group is employed in a substantially disparate manner.

(j) The Contractor shall not use goals or affirmative action standards to discriminate against any person because of race, color, religion, sex, or national origin.

(k) The Contractor shall not enter into any subcontract with any person or firm debarred from Government contracts under Executive Order 11246, as amended.

(l) The Contractor shall carry out such sanctions and penalties for violation of this clause and of the Equal Opportunity clause, including suspension, termination, and cancellation of existing subcontracts, as may be imposed or ordered under Executive Order 11246, as amended, and its implementing regulations, by the OFCCP. Any failure to carry out these sanctions and penalties as ordered shall be a violation of this clause and Executive Order 11246, as amended.

(m) The Contractor in fulfilling its obligations under this clause shall implement affirmative action procedures at least as extensive as those prescribed in paragraph (g) of this clause, so as to achieve maximum results from its efforts to ensure equal employment opportunity. If the Contractor fails to comply with the requirements of Executive Order 11246, as amended, the implementing regulations, or this clause, the Deputy Assistant Secretary shall take action as prescribed in 41 CFR 60-4.8.

(n) The Contractor shall designate a responsible official to--

(1) Monitor all employment-related activity to ensure that the Contractor's equal employment policy is being carried out;

(2) Submit reports as may be required by the Government; and

(3) Keep records that shall at least include for each employee the name, address, telephone number, construction trade, union affiliation (if any), employee identification number, social security number, race, sex, status (e.g., mechanic, apprentice, trainee, helper, or laborer), dates of changes in status, hours worked per week in the indicated trade, rate of pay, and locations at which the work was performed. Records shall be maintained in an easily understandable and retrievable form; however, to the degree that existing records satisfy this requirement, separate

records are not required to be maintained.

Nothing contained herein shall be construed as a limitation upon the application of other laws that establish different standards of compliance or upon the requirements for the hiring of local or other area residents (e.g., those under the Public Works Employment Act of 1977 and the Community Development Block Grant Program).

(End of clause)

52.222-35 EQUAL OPPORTUNITY FOR SPECIAL DISABLED VETERANS, VETERANS OF THE VIETNAM ERA, AND OTHER ELIGIBLE VETERANS (DEC 2001)

(a) Definitions. As used in this clause--

All employment openings means all positions except executive and top management, those positions that will be filled from within the Contractor's organization, and positions lasting 3 days or less. This term includes full-time employment, temporary employment of more than 3 days duration, and part-time employment.

Executive and top management means any employee--

(1) Whose primary duty consists of the management of the enterprise in which the individual is employed or of a customarily recognized department or subdivision thereof;

(2) Who customarily and regularly directs the work of two or more other employees;

(3) Who has the authority to hire or fire other employees or whose suggestions and recommendations as to the hiring or firing and as to the advancement and promotion or any other change of status of other employees will be given particular weight;

(4) Who customarily and regularly exercises discretionary powers; and

(5) Who does not devote more than 20 percent or, in the case of an employee of a retail or service establishment, who does not devote more than 40 percent of total hours of work in the work week to activities that are not directly and closely related to the performance of the work described in paragraphs (1) through (4) of this definition. This paragraph (5) does not apply in the case of an employee who is in sole charge of an establishment or a physically separated branch establishment, or who owns at least a 20 percent interest in the enterprise in which the individual is employed.

Other eligible veteran means any other veteran who served on active duty during a war or in a campaign or expedition for which a campaign badge has been authorized.

Positions that will be filled from within the Contractor's organization means employment openings for which the Contractor will give no consideration to persons outside the Contractor's organization (including any affiliates, subsidiaries, and parent companies) and includes any openings the Contractor proposes to fill from regularly established “recall” lists. The exception does not apply to a particular opening once an employer decides to consider applicants outside of its organization.

Qualified special disabled veteran means a special disabled veteran who satisfies the requisite skill, experience, education, and other job-related requirements of the employment position such veteran holds or desires, and who, with or without reasonable accommodation, can perform the essential functions of such position.

Special disabled veteran means--

(1) A veteran who is entitled to compensation (or who but for the receipt of military retired pay would be entitled to compensation) under laws administered by the Department of Veterans Affairs for a disability--

(i) Rated at 30 percent or more; or

(ii) Rated at 10 or 20 percent in the case of a veteran who has been determined under 38 U.S.C. 3106 to have a serious employment handicap (i.e., a significant impairment of the veteran's ability to prepare for, obtain, or retain employment consistent with the veteran's abilities, aptitudes, and interests); or

(2) A person who was discharged or released from active duty because of a service-connected disability.

Veteran of the Vietnam era means a person who--

(1) Served on active duty for a period of more than 180 days and was discharged or released from active duty with other than a dishonorable discharge, if any part of such active duty occurred--

(i) In the Republic of Vietnam between February 28, 1961, and May 7, 1975; or

(ii) Between August 5, 1964, and May 7, 1975, in all other cases; or

(2) Was discharged or released from active duty for a service-connected disability if any part of the active duty was performed--

(i) In the Republic of Vietnam between February 28, 1961, and May 7, 1975; or

(ii) Between August 5, 1964, and May 7, 1975, in all other cases.
(b) General. (1) The Contractor shall not discriminate against the individual because the individual is a special disabled veteran, a veteran of the Vietnam era, or other eligible veteran, regarding any position for which the employee or applicant for employment is qualified. The Contractor shall take affirmative action to employ, advance in employment, and otherwise treat qualified special disabled veterans, veterans of the Vietnam era, and other eligible veterans without discrimination based upon their disability or veterans' status in all employment practices such as--

(i) Recruitment, advertising, and job application procedures;

(ii) Hiring, upgrading, promotion, award of tenure, demotion, transfer, layoff, termination, right of return from layoff and rehiring;

(iii) Rate of pay or any other form of compensation and changes in compensation;

(iv) Job assignments, job classifications, organizational structures, position descriptions, lines of progression, and seniority lists;

(v) Leaves of absence, sick leave, or any other leave;

(vi) Fringe benefits available by virtue of employment, whether or not administered by the Contractor;

(vii) Selection and financial support for training, including apprenticeship, and on-the-job training under 38 U.S.C. 3687, professional meetings, conferences, and other related activities, and selection for leaves of absence to pursue training;

(viii) Activities sponsored by the Contractor including social or recreational programs; and

(ix) Any other term, condition, or privilege of employment.

(2) The Contractor shall comply with the rules, regulations, and relevant orders of the Secretary of Labor issued under the Vietnam Era Veterans' Readjustment Assistance Act of 1972 (the Act), as amended (38 U.S.C. 4211 and 4212).

(c) Listing openings. (1) The Contractor shall immediately list all employment openings that exist at the time of the execution of this contract and those which occur during the performance of this contract, including those not generated by this contract, and including those occurring at an establishment of the Contractor other than the one where the contract is being performed, but excluding those of independently operated corporate affiliates, at an appropriate local public employment service office of the State wherein the opening occurs. Listing employment openings with the U.S. Department of Labor's America's Job Bank shall satisfy the requirement to list jobs with the local employment service office.

(2) The Contractor shall make the listing of employment openings with the local employment service office at least concurrently with using any other recruitment source or effort and shall involve the normal obligations of placing a bona fide job order, including accepting referrals of veterans and nonveterans. This listing of employment openings does not require hiring any particular job applicant or hiring from any particular group of job applicants and is not intended to relieve the Contractor from any requirements of Executive orders or regulations concerning nondiscrimination in employment.

(3) Whenever the Contractor becomes contractually bound to the listing terms of this clause, it shall advise the State public employment agency in each State where it has establishments of the name and location of each hiring location in the State. As long as the Contractor is contractually bound to these terms and has so advised the State agency, it need not advise the State agency of subsequent contracts. The Contractor may advise the State agency when it is no longer bound by this contract clause.

(d) Applicability. This clause does not apply to the listing of employment openings that occur and are filled outside the 50 States, the District of Columbia, the Commonwealth of Puerto Rico, the Commonwealth of the Northern Mariana Islands, American Samoa, Guam, the Virgin Islands of the United States, and Wake Island.

(e) Postings. (1) The Contractor shall post employment notices in conspicuous places that are available to employees and applicants for employment.

(2) The employment notices shall--

(i) State the rights of applicants and employees as well as the Contractor's obligation under the law to take affirmative action to employ and advance in employment qualified employees and applicants who are special disabled veterans, veterans of the Vietnam era, and other eligible veterans; and

(ii) Be in a form prescribed by the Deputy Assistant Secretary for Federal Contract Compliance Programs, Department of Labor (Deputy Assistant Secretary of Labor), and provided by or through the Contracting Officer.

(3) The Contractor shall ensure that applicants or employees who are special disabled veterans are informed of the contents of the notice (e.g., the Contractor may have the notice read to a visually disabled veteran, or may lower the posted notice so that it can be read by a person in a wheelchair).

(4) The Contractor shall notify each labor union or representative of workers with which it has a collective bargaining agreement, or other contract understanding, that the Contractor is bound by the terms of the Act and is committed to take affirmative action to employ, and advance in employment, qualified special disabled veterans, veterans of the Vietnam era, and other eligible veterans.

(f) Noncompliance. If the Contractor does not comply with the requirements of this clause, the Government may take appropriate actions under the rules, regulations, and relevant orders of the Secretary of Labor issued pursuant to the Act.

(g) Subcontracts. The Contractor shall insert the terms of this clause in all subcontracts or purchase orders of $25,000 or more unless exempted by rules, regulations, or orders of the Secretary of Labor. The Contractor shall act as specified by the Deputy Assistant Secretary of Labor to enforce the terms, including action for noncompliance.

(End of clause)

52.222-36 AFFIRMATIVE ACTION FOR WORKERS WITH DISABILITIES (JUN 1998)

(a) General. (1) Regarding any position for which the employee or applicant for employment is qualified, the Contractor shall not discriminate against any employee or applicant because of physical or mental disability. The Contractor agrees to take affirmative action to employ, advance in employment, and otherwise treat qualified individuals with disabilities without discrimination based upon their physical or mental disability in all employment practices such as--

(i) Recruitment, advertising, and job application procedures;

(ii) Hiring, upgrading, promotion, award of tenure, demotion, transfer, layoff, termination, right of return from layoff, and rehiring;

(iii) Rates of pay or any other form of compensation and changes in compensation;

(iv) Job assignments, job classifications, organizational structures, position descriptions, lines of progression, and seniority lists;

(v) Leaves of absence, sick leave, or any other leave;

(vi) Fringe benefits available by virtue of employment, whether or not administered by the Contractor;

(vii) Selection and financial support for training, including apprenticeships, professional meetings, conferences, and other related activities, and selection for leaves of absence to pursue training;

(viii) Activities sponsored by the Contractor, including social or recreational programs; and

(ix) Any other term, condition, or privilege of employment.

(2) The Contractor agrees to comply with the rules, regulations, and relevant orders of the Secretary of Labor (Secretary) issued under the Rehabilitation Act of 1973 (29 U.S.C. 793) (the Act), as amended.

(b) Postings. (1) The Contractor agrees to post employment notices stating--

(i) The Contractor's obligation under the law to take affirmative action to employ and advance in employment qualified individuals with disabilities; and

(ii) The rights of applicants and employees.

(2) These notices shall be posted in conspicuous places that are available to employees and applicants for employment. The Contractor shall ensure that applicants and employees with disabilities are informed of the contents

of the notice (e.g., the Contractor may have the notice read to a visually disabled individual, or may lower the posted notice so that it might be read by a person in a wheelchair). The notices shall be in a form prescribed by the Deputy Assistant Secretary for Federal Contract Compliance of the U.S. Department of Labor (Deputy Assistant Secretary) and shall be provided by or through the Contracting Officer.

(3) The Contractor shall notify each labor union or representative of workers with which it has a collective bargaining agreement or other contract understanding, that the Contractor is bound by the terms of Section 503 of the Act and is committed to take affirmative action to employ, and advance in employment, qualified individuals with physical or mental disabilities.

(c) Noncompliance. If the Contractor does not comply with the requirements of this clause, appropriate actions may be taken under the rules, regulations, and relevant orders of the Secretary issued pursuant to the Act.

(d) Subcontracts. The Contractor shall include the terms of this clause in every subcontract or purchase order in excess of $10,000 unless exempted by rules, regulations, or orders of the Secretary. The Contractor shall act as specified by the Deputy Assistant Secretary to enforce the terms, including action for noncompliance.

(End of clause)

52.222-37 EMPLOYMENT REPORTS ON SPECIAL DISABLED VETERANS, VETERANS OF THE VIETNAM ERA, AND OTHER ELIGIBLE VETERANS (DEC 2001)

(a) Unless the Contractor is a State or local government agency, the Contractor shall report at least annually, as required by the Secretary of Labor, on--

(1) The number of disabled veterans and the number of veterans of the Vietnam era in the workforce of the contractor by job category and hiring location; and

(2) The total number of new employees hired during the period covered by the report, and of that total, the number of disabled veterans, and the number of veterans of the Vietnam era.

(b) The above items shall be reported by completing the form entitled "Federal Contractor Veterans' Employment Report VETS-100."

(c) Reports shall be submitted no later than September 30 of each year beginning September 30, 1988.

(d) The employment activity report required by paragraph (a)(2) of this clause shall reflect total hires during the most recent 12-month period as of the ending date selected for the employment profile report required by paragraph (a)(1) of this clause. Contractors may select an ending date: (1) As of the end of any pay period during the period January through March 1st of the year the report is due, or (2) as of December 31, if the contractor has previous written approval from the Equal Employment Opportunity Commission to do so for purposes of submitting the Employer Information Report EEO-1 (Standard Form 100).

(e) The count of veterans reported according to paragraph (a) of this clause shall be based on voluntary disclosure. Each Contractor subject to the reporting requirements at 38 U.S.C. 4212 shall invite all disabled veterans and veterans of the Vietnam era who wish to benefit under the affirmative action program at 38 U.S.C. 4212 to identify themselves to the Contractor. The invitation shall state that the information is voluntarily provided; that the information will be kept confidential; that disclosure or refusal to provide the information will not subject the applicant or employee to any adverse treatment; and that the information will be used only in accordance with the regulations promulgated under 38 U.S.C. 4212.

(f) Subcontracts. The Contractor shall include the terms of this clause in every subcontract or purchase order of $10,000 or more unless exempted by rules, regulations, or orders of the Secretary.

(End of clause)

52.222-41 SERVICE CONTRACT ACT OF 1965, AS AMENDED (MAY 1989)

(a) Definitions. "Act," as used in this clause, means the Service Contract Act of 1965, as amended (41 U.S.C. 351, et seq.).

"Contractor," as used in this clause or in any subcontract, shall be deemed to refer to the subcontractor, except in the term "Government Prime Contractor."

"Service employee," as used in this clause, means any person engaged in the performance of this contract other than any person employed in a bona fide executive, administrative, or professional capacity, as these terms are defined in Part 541 of Title 29, Code of Federal Regulations, as revised. It includes all such persons regardless of any contractual relationship that may be alleged to exist between a Contractor or subcontractor and such persons.

(b) Applicability. This contract is subject to the following provisions and to all other applicable provisions of the Act and regulations of the Secretary of Labor (29 CFR Part 4). This clause does not apply to contracts or subcontracts administratively exempted by the Secretary of Labor or exempted by 41 U.S.C. 356, as interpreted in Subpart C of 29 CFR Part 4.

(c) Compensation. (1) Each service employee employed in the performance of this contract by the Contractor or any subcontractor shall be paid not less than the minimum monetary wages and shall be furnished fringe benefits in accordance with the wages and fringe benefits determined by the Secretary of Labor, or authorized representative, as specified in any wage determination attached to this contract.

(2)(i) If a wage determination is attached to this con- tract, the Contractor shall classify any class of service employee which is not listed therein and which is to be employed under the contract (i.e., the work to be performed is not performed by any classification listed in the wage determination) so as to provide a reasonable relationship (i.e., appropriate level of skill comparison) between such unlisted classifications and the classifications listed in the wage determination. Such conformed class of employees shall be paid the monetary wages and furnished the fringe benefits as are determined pursuant to the procedures in this paragraph (c).

(ii) This conforming procedure shall be initiated by the Contractor prior to the performance of contract work by the unlisted class of employee. The Contractor shall submit Standard Form (SF) 1444, Request For Authorization of Additional Classification and Rate, to the Contracting Officer no later than 30 days after the unlisted class of employee performs any contract work. The Contracting Officer shall review the proposed classification and rate and promptly submit the completed SF 1444 (which must include information regarding the agreement or disagreement of the employees' authorized representatives or the employees themselves together with the agency recommendation), and all pertinent informa-tion to the Wage and Hour Division, Employment Standards Administration, U.S. Department of Labor. The Wage and Hour Division will approve, modify, or disapprove the action or render a final determination in the event of disagreement within 30 days of receipt or will notify the Contracting Officer within 30 days of receipt that additional time is necessary.

(iii) The final determination of the conformance action by the Wage and Hour Division shall be transmitted to the Contracting Officer who shall promptly notify the Contractor of the action taken. Each affected employee shall be furnished by the Contractor with a written copy of such determination or it shall be posted as a part of the wage determination.

(iv)(A) The process of establishing wage and fringe benefit rates that bear a reasonable relationship to those listed in a wage determination cannot be reduced to any single formula. The approach used may vary from wage determination to wage determination depending on the circumstances. Standard wage and salary administration practices which rank various job classifications by pay grade pursuant to point schemes or other job factors may, for example, be relied upon. Guidance may also be obtained from the way different jobs are rated under Federal pay systems (Federal Wage Board Pay System and the General Schedule) or from other wage determina- tions issued in the same locality. Basic to the establishment of any conformable wage rate(s) is the concept that a pay relationship should be maintained between job classifications based on the skill required and the duties performed.

(B) In the case of a contract modification, an exercise of an option, or extension of an existing contract, or in any other case where a Contractor succeeds a contract under which the classification in question was previously conformed pursuant to paragraph (c) of this clause, a new conformed wage rate and fringe benefits may be assigned to the conformed classification by indexing (i.e., adjusting) the previous conformed rate and fringe benefits by an amount equal to the average (mean) percentage increase (or decrease, where appropriate) between the wages and fringe benefits specified for all classifications to be used on the contract which are listed in the current wage determination, and those specified for the corresponding classifications in the previously applicable wage determination. Where conforming actions are accomplished in accordance with this paragraph prior to the performance of contract work by the unlisted class of employees, the Contractor shall advise the Contracting Officer of the action taken but the other procedures in subdivision (c)(2)(ii) of this clause need not be followed.

(C) No employee engaged in performing work on this contract shall in any event be paid less than the currently applicable minimum wage specified under section 6(a)(1) of the Fair Labor Standards Act of 1938, as amended.

(v) The wage rate and fringe benefits finally determined under this subparagraph (c)(2) of this clause shall be paid to all employees performing in the classification from the first day on which contract work is performed by them in the classification. Failure to pay the unlisted employees the compensation agreed upon by the interested parties and/or finally determined by the Wage and Hour Division retroactive to the date such class of employees commenced contract work shall be a violation of the Act and this contract.

(vi) Upon discovery of failure to comply with subparagraph (c)(2) of this clause, the Wage and Hour Division shall make a final determination of conformed classification, wage rate, and/or fringe benefits which shall be retroactive to the date such class or classes of employees commenced contract work.

(3) Adjustment of Compensation. If the term of this contract is more than 1 year, the minimum monetary wages and fringe benefits required to be paid or fur- nished thereunder to service employees under this contract shall be subject to adjustment after 1 year and not less often than once every 2 years, under wage determinations issued by the Wage and Hour Division.

(d) Obligation to Furnish Fringe Benefits. The Contractor or subcontractor may discharge the obligation to furnish fringe benefits specified in the attachment or determined under subparagraph (c)(2) of this clause by furnishing equivalent combinations of bona fide fringe benefits, or by making equivalent or differential cash payments, only in accordance with Subpart D of 29 CFR Part 4.

(e) Minimum Wage. In the absence of a minimum wage attachment for this contract, neither the Contractor nor any subcontractor under this contract shall pay any person performing work under this contract (regardless of whether the person is a service employee) less than the minimum wage specified by section 6(a)(1) of the Fair Labor Standards Act of 1938. Nothing in this clause shall relieve the Contractor or any subcontractor of any other obligation under law or contract for payment of a higher wage to any employee.

(f) Successor Contracts. If this contract succeeds a contract subject to the Act under which substantially the same services were furnished in the same locality and service employees were paid wages and fringe benefits provided for in a collective bargaining agreement, in the absence of the minimum wage attachment for this contract setting forth such collectively bargained wage rates and fringe benefits, neither the Contractor nor any subcontractor under this

contract shall pay any service employee performing any of the contract work (regardless of whether or not such employee was employed under the predecessor contract), less than the wages and fringe benefits provided for in such collective bargaining agreement, to which such employee would have been entitled if employed under the predecessor contract, including accrued wages and fringe benefits and any prospective increases in wages and fringe benefits provided for under such agreement. No Contractor or subcontractor under this contract may be relieved of the foregoing obligation unless the limitations of 29 CFR 4.1b(b) apply or unless the Secretary of Labor or the Secretary's authorized representative finds, after a hearing as provided in 29 CFR 4.10 that the wages and/or fringe benefits provided for in such agreement are substantially at variance with those which prevail for services of a character similar in the locality, or determines, as provided in 29 CFR 4.11, that the collective bargaining agreement applicable to service employees employed under the predecessor contract was not entered into as a result of arm's length negotiations. Where it is found in accordance with the review procedures provided in 29 CFR 4.10 and/or 4.11 and Parts 6 and 8 that some or all of the wages and/or fringe benefits contained in a predecessor Contractor's collective bargaining agreement are substantially at variance with those which prevail for services of a character similar in the locality, and/or that the collective bargaining agreement applicable to service employees employed under the predecessor contract was not entered into as a result of arm's length negotiations, the Department will issue a new or revised wage determination setting forth the applicable wage rates and fringe benefits. Such determination shall be made part of the contract or subcontract, in accordance with the decision of the Administrator, the Administrative Law Judge, or the Board of Service Contract Appeals, as the case may be, irrespective of whether such issuance occurs prior to or after the award of a contract or subcontract (53 Comp. Gen. 401 (1973)). In the case of a wage determination issued solely as a result of a finding of substantial variance, such determination shall be effective as of the date of the final administrative decision.

(g) Notification to Employees. The Contractor and any subcontractor under this contract shall notify each service employee commencing work on this contract of the minimum monetary wage and any fringe benefits required to be paid pursuant to this contract, or shall post the wage determination attached to this contract. The poster provided by the Department of Labor (Publication WH 1313) shall be posted in a prominent and accessible place at the worksite. Failure to comply with this requirement is a violation of section 2(a)(4) of the Act and of this contract.

(h) Safe and Sanitary Working Conditions. The Contractor or subcontractor shall not permit any part of the services called for by this contract to be performed in buildings or surroundings or under working conditions provided by or under the control or supervision of the Contractor or subcontractor which are unsanitary, hazardous, or dangerous to the health or safety of the service employees. The Contractor or subcontractor shall comply with the safety and health standards applied under 29 CFR Part 1925.

(i) Records. (1) The Contractor and each subcontractor performing work subject to the Act shall make and maintain for 3 years from the completion of the work, and make them available for inspection and transcription by authorized representatives of the Wage and Hour Division, Employment Standards Administration, a record of the following:

(i) For each employee subject to the Act--

(A) Name and address and social security number;

(B) Correct work classification or classifications, rate or rates of monetary wages paid and fringe benefits provided, rate or rates of payments in lieu of fringe benefits, and total daily and weekly compensation;

(C) Daily and weekly hours worked by each employee; and

(D) Any deductions, rebates, or refunds from the total daily or weekly compensation of each employee.

(ii) For those classes of service employees not included in any wage determination attached to this contract, wage rates or fringe benefits determined by the interested parties or by the Administrator or authorized representative under the terms of paragraph (c) of this clause. A copy of the report required by subdivision (c)(2)(ii) of this clause will fulfill this requirement.

(iii) Any list of the predecessor Contractor's employees which had been furnished to the Contractor as prescribed by paragraph (n) of this clause.

(2) The Contractor shall also make available a copy of this contract for inspection or transcription by authorized representatives of the Wage and Hour Division.

(3) Failure to make and maintain or to make available these records for inspection and transcription shall be a violation of the regulations and this contract, and in the case of failure to produce these records, the Contracting Officer, upon direction of the Department of Labor and notification to the Contractor, shall take action to cause suspension of any further payment or advance of funds until the violation ceases.

(4) The Contractor shall permit authorized representatives of the Wage and Hour Division to conduct interviews with employees at the worksite during normal working hours.

(j) Pay Periods. The Contractor shall unconditionally pay to each employee subject to the Act all wages due free and clear and without subsequent deduction (except as otherwise provided by law or regulations, 29 CFR Part 4), rebate, or kickback on any account. These payments shall be made no later than one pay period following the end of the regular pay period in which the wages were earned or accrued. A pay period under this Act may not be of any duration longer than semi-monthly.

(k) Withholding of Payments and Termination of Contract. The Contracting Officer shall withhold or cause to be withheld from the Government Prime Contractor under this or any other Government contract with the Prime Contractor such sums as an appropriate official of the Department of Labor requests or such sums as the Contracting Officer decides may be necessary to pay underpaid employees employed by the Contractor or subcontractor. In the event of failure to pay any employees subject to the Act all or part of the wages or fringe benefits due under the Act, the Contracting Officer may, after authorization or by direction of the Department of Labor and written notification to the Contractor, take action to cause suspension of any further payment or advance of funds until such violations have ceased. Additionally, any failure to comply with the requirements of this clause may be grounds for termination of the right to proceed with the contract work. In such event, the Government may enter into other contracts or arrangements for completion of the work, charging the Contractor in default with any additional cost.

(l) Subcontracts. The Contractor agrees to insert this clause in all subcontracts subject to the Act.

(m) Collective Bargaining Agreements Applicable to Service Employees. If wages to be paid or fringe benefits to be furnished any service employees employed by the Government Prime Contractor or any subcontractor under the contract are provided for in a collective bargaining agreement which is or will be effective during any period in which the contract is being performed, the Government Prime Contractor shall report such fact to the Contracting Officer, together with full information as to the application and accrual of such wages and fringe benefits, including any prospective increases, to service employees engaged in work on the contract, and a copy of the collective bargaining agreement. Such report shall be made upon commencing performance of the contract, in the case of collective bargaining agreements effective at such time, and in the case of such agreements or provisions or amendments thereof effective at a later time during the period of contract performance such agreements shall be reported promptly after negotiation thereof.

(n) Seniority List. Not less than 10 days prior to completion of any contract being performed at a Federal facility where service employees may be retained in the performance of the succeeding contract and subject to a wage determination which contains vacation or other benefit provisions based upon length of service with a Contractor (predecessor) or successor (29 CFR 4.173), the incumbent Prime Contractor shall furnish the Contracting Officer a certified list of the names of all service employees on the Contractor's or subcontractor's payroll during the last month of contract performance. Such list shall also contain anniversary dates of employment on the contract either with the current or predecessor Contractors of each such service employee. The Contracting Officer shall turn over such list to the successor Contractor at the commencement of the succeeding contract.

(o) Rulings and Interpretations. Rulings and interpretations of the Act are contained in Regulations, 29 CFR Part 4.

(p) Contractor's Certification. (1) By entering into this contract, the Contractor (and officials thereof) certifies that neither it (nor he or she) nor any person or firm who has a substantial interest in the Contractor's firm is a person or firm ineligible to be awarded Government contracts by virtue of the sanctions imposed under section 5 of the Act.

(2) No part of this contract shall be subcontracted to any person or firm ineligible for award of a Government contract under section 5 of the Act.

(3) The penalty for making false statements is prescribed in the U.S. Criminal Code, 18 U.S.C. 1001.

(q) Variations, Tolerances, and Exemptions Involving Employment. Notwithstanding any of the provisions in paragraphs (b) through (o) of this clause, the following employees may be employed in accordance with the following variations, tolerances, and exemptions, which the Secretary of Labor, pursuant to section 4(b) of the Act prior to its amendment by Pub. L. 92-473, found to be necessary and proper in the public interest or to avoid serious impairment of the conduct of Government business:

(1) Apprentices, student-learners, and workers whose earning capacity is impaired by age, physical or mental deficiency, or injury may be employed at wages lower than the minimum wages otherwise required by section 2(a)(1) or 2(b)(1) of the Act without diminishing any fringe benefits or cash payments in lieu thereof required under section 2(a)(2) of the Act, in accordance with the conditions and procedures prescribed for the employment of apprentices, student-learners, handicapped persons, and handicapped clients of sheltered workshops under section 14 of the Fair Labor Standards Act of 1938, in the regulations issued by the Administrator (29 CFR Parts 520, 521, 524, and 525).

(2) The Administrator will issue certificates under the Act for the employment of apprentices, student-learners, handicapped persons, or handicapped clients of sheltered workshops not subject to the Fair Labor Standards Act of 1938, or subject to different minimum rates of pay under the two acts, authorizing appropriate rates of minimum wages (but without changing requirements concerning fringe benefits or supplementary cash payments in lieu thereof), applying procedures prescribed by the applicable regulations issued under the Fair Labor Standards Act of 1938 (29 CFR Parts 520, 521, 524, and 525).

(3) The Administrator will also withdraw, annul, or cancel such certificates in accordance with the regulations in 29 CFR Parts 525 and 528.

(r) Apprentices. Apprentices will be permitted to work at less than the predetermined rate for the work they perform when they are employed and individually registered in a bona fide apprenticeship program registered with a State Apprenticeship Agency which is recognized by the U.S. Department of Labor, or if no such recognized agency exists in a State, under a program registered with the Bureau of Apprenticeship and Training, Employment and Training Administration, U.S. Department of Labor. Any employee who is not registered as an apprentice in an approved program shall be paid the wage rate and fringe benefits contained in the applicable wage determination for the journeyman classification of work actually performed. The wage rates paid apprentices shall not be less than the wage rate for their level of progress set forth in the registered program, expressed as the appropriate percentage of the journeyman's rate contained in the applicable wage determination. The allowable ratio of apprentices to journeymen employed on the contract work in any craft classification shall not be greater than the ratio permitted to the Contractor as to his entire work force under the registered program.

(s) Tips. An employee engaged in an occupation in which the employee customarily and regularly receives more than $30 a month in tips may have the amount of these tips credited by the employer against the minimum wage required by section 2(a)(1) or section 2(b)(1) of the Act, in accordance with section 3(m) of the Fair Labor Standards Act and Regulations, 29 CFR Part 531. However, the amount of credit shall not exceed $1.34 per hour beginning January 1, 1981. To use this provision--

(1) The employer must inform tipped employees about this tip credit allowance before the credit is utilized;

(2) The employees must be allowed to retain all tips (individually or through a pooling arrangement and regardless of whether the employer elects to take a credit for tips received);

(3) The employer must be able to show by records that the employee receives at least the applicable Service Contract Act minimum wage through the combination of direct wages and tip credit; and

(4) The use of such tip credit must have been permitted under any predecessor collective bargaining agreement applicable by virtue of section 4(c) of the Act.

Disputes Concerning Labor Standards. The U.S. Department of Labor has set forth in 29 CFR Parts 4, 6, and 8 procedures for resolving disputes concerning labor standards requirements. Such disputes shall be resolved in accordance with those procedures and not the Disputes clause of this contract. Disputes within the meaning of this clause include disputes between the Contractor (or any of its subcontractors) and the contracting agency, the U.S. Department of Labor, or the employees or their representatives.

(End of clause)

52.222-42 STATEMENT OF EQUIVALENT RATES FOR FEDERAL HIRES (MAY 1989)

In compliance with the Service Contract Act of 1965, as amended, and the regulations of the Secretary of Labor (29 CFR Part 4), this clause identifies the classes of service employees expected to be employed under the contract and states the wages and fringe benefits payable to each if they were employed by the contracting agency subject to the provisions of 5 U.S.C. 5341 or 5332.

THIS STATEMENT IS FOR INFORMATION ONLY: IT IS NOT A WAGE DETERMINATION

Employee Class	Monetary Wage-Fringe Benefits
General Clerk IV	$ 9.58
Secretary V	$15.97
Civil Engineer Tech	$14.83
Engineeer Tech I	$11.85

(End of clause)

52.222-44 FAIR LABOR STANDARDS ACT AND SERVICE CONTRACT ACT--PRICE ADJUSTMENT (FEB 2002)

(a) This clause applies to both contracts subject to area prevailing wage determinations and contracts subject to Contractor collective bargaining agreements.

(b) The Contractor warrants that the prices in this contract do not include any allowance for any contingency to cover increased costs for which adjustment is provided under this clause.

(c) The contract price or contract unit price labor rates will be adjusted to reflect increases or decreases by the Contractor in wages and fringe benefits to the extent that these increases or decreases are made to comply with--

(1) An increased or decreased wage determination applied to this contract by operation of law; or

(2) An amendment to the Fair Labor Standards Act of 1938 that is enacted subsequent to award of this contract, affects the minimum wage, and becomes applicable to this contract under law.

(d) Any such adjustment will be limited to increases or decreases in wages and fringe benefits as described in paragraph (c) of this clause, and to the accompanying increases or decreases in social security and unemployment taxes and workers' compensation insurance; it shall not otherwise include any amount for general and administrative costs, overhead, or profit.

(e) The Contractor shall notify the Contracting Officer of any increase claimed under this clause within 30 days after the effective date of the wage change, unless this period is extended by the Contracting Officer in writing. The Contractor shall promptly notify the Contracting Officer of any decrease under this clause, but nothing in the clause shall preclude the Government from asserting a claim within the period permitted by law. The notice shall contain a statement of the amount claimed and any relevant supporting data that the Contracting Officer may reasonably require. Upon agreement of the parties, the contract price or contract unit price labor rates shall be modified in writing. The Contractor shall continue performance pending agreement on or determination of any such adjustment and its effective date.

(f) The Contracting Officer or an authorized representative shall, until the expiration of 3 years after final payment under the contract, have access to and the right to examine any directly pertinent books, documents, papers, and records of the Contractor.

(End of clause)

52.223-5 POLLUTION PREVENTION AND RIGHT-TO-KNOW INFORMATION (APR 1998)

(a) Executive Order 12856 of August 3, 1993, requires Federal facilities to comply with the provisions of the Emergency Planning and Community Right-to-Know Act of 1986 (EPCRA)(42 U.S.C. 11001-11050) and the Pollution Prevention Act of 1990 (PPA)(42 U.S.C. 13101-13109).

(b) The Contractor shall provide all information needed by the Federal facility to comply with the emergency planning reporting requirements of Section 302 of EPCRA; the emergency notice requirements of Section 304 of EPCRA; the list of Material Safety Data Sheets required by Section 311 of EPCRA; the emergency and hazardous chemical inventory forms of Section 312 of EPCRA; the toxic chemical release inventory of Section 313 of EPCRA, which includes the reduction and recycling information required by Section 6607 of PPA; and the toxic chemical reduction goals requirements of Section 3-302 of Executive Order 12856.

(End of clause)

52.223-6 DRUG-FREE WORKPLACE (MAY 2001)

(a) Definitions. As used in this clause --

"Controlled substance" means a controlled substance in schedules I through V of section 202 of the Controlled Substances Act (21 U.S.C. 812) and as further defined in regulation at 21 CFR 1308.11 - 1308.15.

"Conviction" means a finding of guilt (including a plea of nolo contendere) or imposition of sentence, or both, by any judicial body charged with the responsibility to deter- mine violations of the Federal or State criminal drug statutes.

"Criminal drug statute" means a Federal or non-Federal criminal statute involving the manufacture, distribution,

dispensing, possession, or use of any controlled substance.

"Drug-free workplace" means the site(s) for the performance of work done by the Contractor in connection with a specific contract at which employees of the Contractor are prohibited from engaging in the unlawful manufacture, distribution, dispensing, possession, or use of a controlled substance.

"Employee" means an employee of a Contractor directly engaged in the performance of work under a Government contract. "Directly engaged" is defined to include all direct cost employees and any other Contractor employee who has other than a minimal impact or involvement in contract performance.

"Individual" means an offeror/contractor that has no more than one employee including the offeror/contractor.

(b) The Contractor, if other than an individual, shall-- within 30 days after award (unless a longer period is agreed to in writing for contracts of 30 days or more performance duration), or as soon as possible for contracts of less than 30 days performance duration--

(1) Publish a statement notifying its employees that the unlawful manufacture, distribution, dispensing, possession, or use of a controlled substance is prohibited in the Contractor's workplace and specifying the actions that will be taken against employees for violations of such prohibition;

(2) Establish an ongoing drug-free awareness program to inform such employees about--

(i) The dangers of drug abuse in the workplace;

(ii) The Contractor's policy of maintaining a drug-free workplace;

(iii) Any available drug counseling, rehabilitation, and employee assistance programs; and

(iv) The penalties that may be imposed upon employees for drug abuse violations occurring in the workplace;

(3) Provide all employees engaged in performance of the contract with a copy of the statement required by subparagraph (b)(1) of this clause;

(4) Notify such employees in writing in the statement required by subparagraph (b)(1) of this clause that, as a condition of continued employment on this contract, the employee will--

(i) Abide by the terms of the statement; and

(ii) Notify the employer in writing of the employee's conviction under a criminal drug statute for a violation occurring in the workplace no later than 5 days after such conviction.

(5) Notify the Contracting Officer in writing within 10 days after receiving notice under subdivision (b)(4)(ii) of this clause, from an employee or otherwise receiving actual notice of such conviction. The notice shall include the position title of the employee;

(6) Within 30 days after receiving notice under subdivision (b)(4)(ii) of this clause of a conviction, take one of the following actions with respect to any employee who is convicted of a drug abuse violation occurring in the workplace:

(i) Taking appropriate personnel action against such employee, up to and including termination; or

(ii) Require such employee to satisfactorily participate in a drug abuse assistance or rehabilitation program approved for such purposes by a Federal, State, or local health, law enforcement, or other appropriate agency; and

(7) Make a good faith effort to maintain a drug-free workplace through implementation of subparagraphs (b)(1) though (b)(6) of this clause.

(c) The Contractor, if an individual, agrees by award of the contract or acceptance of a purchase order, not to engage in the unlawful manufacture, distribution, dispensing, possession, or use of a controlled substance while performing this contract.

(d) In addition to other remedies available to the Government, the Contractor's failure to comply with the requirements of paragraph (b) or (c) of this clause may, pursuant to FAR 23.506, render the Contractor subject to suspension of contract payments, termination of the contract for default, and suspension or debarment.

(End of clause)

52.223-14 TOXIC CHEMICAL RELEASE REPORTING (OCT 2000)

(a) Unless otherwise exempt, the Contractor, as owner or operator of a facility used in the performance of this contract, shall file by July 1 for the prior calendar year an annual Toxic Chemical Release Inventory Form (Form R) as described in sections 313(a) and (g) of the Emergency Planning and Community Right-to-Know Act of 1986 (EPCRA) (42 U.S.C. 11023(a) and (g)), and section 6607 of the Pollution Prevention Act of 1990 (PPA) (42 U.S.C. 13106). The Contractor shall file, for each facility subject to the Form R filing and reporting requirements, the annual Form R throughout the life of the contract.

(b) A Contractor owned or operated facility used in the performance of this contract is exempt from the requirement to file an annual Form R if--

(1) The facility does not manufacture, process, or otherwise use any toxic chemicals listed under section 313(c) of EPCRA, 42 U.S.C. 11023(c);

(2) The facility does not have 10 or more full-time employees as specified in section 313(b)(1)(A) of EPCRA, 42 U.S.C. 11023(b)(1)(A);

(3) The facility does not meet the reporting thresholds of toxic chemicals established under of EPCRA, 42 U.S.C. 11023(f) (including the alternate thresholds at 40 CFR 372.27, provided an appropriate certification form has been filed with EPA);

(4) The facility does not fall within Standard Industrial Classification Code (SIC) major groups 20 through 39 or their corresponding North American Industry Classification System (NAICS) sectors 31 through 33; or

(5) The facility is not located within any State of the United States, the District of Columbia, the Commonwealth of Puerto Rico, Guam, American Samoa, the United States Virgin Islands, the Northern Mariana Islands, or any other territory or possession over which the United States has jurisdiction.

(c) If the Contractor has certified to an exemption in accordance with one or more of the criteria in paragraph (b) of this clause, and after award of the contract circumstances change so that any of its owned or operated facilities used in the performance of this contract is no longer exempt--

(1) The Contractor shall notify the Contracting Officer; and

(2) The Contractor, as owner or operator of a facility used in the performance of this contract that is no longer exempt, shall (i) submit a Toxic Chemical Release Inventory Form (Form R) on or before July 1 for the prior calendar year

during which the facility becomes eligible; and (ii) continue to file the annual Form R for the life of the contract for such facility.

(d) The Contracting Officer may terminate this contract or take other action as appropriate, if the Contractor fails to comply accurately and fully with the EPCRA and PPA toxic chemical release filing and reporting requirements.

(e) Except for acquisitions of commercial items, as defined in FAR Part 2, the Contractor shall--

(1) For competitive subcontracts expected to exceed $100,000 (including all options), include a solicitation provision substantially the same as the provision at FAR 52.223-13, Certification of Toxic Chemical Release Reporting; and

(2) Include in any resultant subcontract exceeding $100,000 (including all options), the substance of this clause, except this paragraph (e).

(End of clause)

52.225-11 BUY AMERICAN ACT--CONSTRUCTION MATERIALS UNDER TRADE AGREEMENTS (JUL 2002)

(a) Definitions. As used in this clause--

Component means an article, material, or supply incorporated directly into a construction material.

Construction material means an article, material, or supply brought to the construction site by the Contractor or subcontractor for incorporation into the building or work. The term also includes an item brought to the site preassembled from articles, materials, or supplies. However, emergency life safety systems, such as emergency lighting, fire alarm, and audio evacuation systems, that are discrete systems incorporated into a public building or work and that are produced as complete systems, are evaluated as a single and distinct construction material regardless of when or how the individual parts or components of those systems are delivered to the construction site. Materials purchased directly by the Government are supplies, not construction material.

Cost of components means--

(1) For components purchased by the Contractor, the acquisition cost, including transportation costs to the place of incorporation into the construction material (whether or not such costs are paid to a domestic firm), and any applicable duty (whether or not a duty-free entry certificate is issued); or

(2) For components manufactured by the Contractor, all costs associated with the manufacture of the component, including transportation costs as described in paragraph (1) of this definition, plus allocable overhead costs, but excluding profit. Cost of components does not include any costs associated with the manufacture of the end product.

Designated country means any of the following countries: Aruba, Austria, Bangladesh, Belgium, Benin, Bhutan, Botswana, Burkina Faso, Burundi, Canada, Cape Verde, Central African Republic, Chad, Comoros, Denmark.

Djibouti, Equatorial Guinea, Finland, France, Gambia, Germany, Greece, Guinea, Guinea-Bissau, Haiti, Hong Kong, Ireland, Israel, Italy, Japan.

Kiribati, Korea, Republic of, Lesotho, Liechtenstein, Luxembourg, Malawi, Maldives, Mali, Mozambique, Nepal, Netherlands, Niger, Norway, Portugal, Rwanda.

Sao Tome and Principe, Sierra Leone, Singapore, Somalia, Spain, Sweden, Switzerland, Tanzania U.R., Togo, Tuvalu, Uganda, United Kingdom, Vanuatu, Western Samoa, Yemen.

Designated country construction material means a construction material that--

(1) Is wholly the growth, product, or manufacture of a designated country; or

(2) In the case of a construction material that consists in whole or in part of materials from another country, has been substantially transformed in a designated country into a new and different construction material distinct from the materials from which it was transformed.

Domestic construction material means--

(1) An unmanufactured construction material mined or produced in the United States; or

(2) A construction material manufactured in the United States, if the cost of its components mined, produced, or manufactured in the United States exceeds 50 percent of the cost of all its components. Components of foreign origin of the same class or kind for which nonavailability determinations have been made are treated as domestic.

Foreign construction material means a construction material other than a domestic construction material.

North American Free Trade Agreement country means Canada or Mexico.

North American Free Trade Agreement country construction material means a construction material that--

(1) Is wholly the growth, product, or manufacture of a North American Free Trade Agreement (NAFTA) country; or

(2) In the case of a construction material that consists in whole or in part of materials from another country, has been substantially transformed in a NAFTA country into a new and different construction material distinct from the materials from which it was transformed.

United States means the 50 States and the District of Columbia, U.S. territories and possessions, Puerto Rico, the Northern Mariana Islands, and any other place subject to U.S. jurisdiction, but does not include leased bases.

(b) Construction materials. (1) This clause implements the Buy American Act (41 U.S.C. 10a-10d) and the Balance of Payments Program by providing a preference for domestic construction material. In addition, the Contracting Officer has determined that the Trade Agreements Act and the North American Free Trade Agreement (NAFTA) apply to this acquisition. Therefore, the Buy American Act restrictions are waived for designated country and NAFTA country construction materials.

(2) The Contractor shall use only domestic, designated country, or NAFTA country construction material in performing this contract, except as provided in paragraphs (b)(3) and (b)(4) of this clause.

(3) The requirement in paragraph (b)(2) of this clause does not apply to the construction materials or components listed by the Government as follows: none.

(4) The Contracting Officer may add other foreign construction material to the list in paragraph (b)(3) of this clause if the Government determines that--

(i) The cost of domestic construction material would be unreasonable. The cost of a particular domestic construction material subject to the restrictions of the Buy American Act is unreasonable when the cost of such material exceeds the cost of foreign material by more than 6 percent;

(ii) The application of the restriction of the Buy American Act to a particular construction material would be impracticable or inconsistent with the public interest; or

(iii) The construction material is not mined, produced, or manufactured in the United States in sufficient and reasonably available commercial quantities of a satisfactory quality.

(c) Request for determination of inapplicability of the Buy American Act.

(1)(i) Any Contractor request to use foreign construction material in accordance with paragraph (b)(4) of this clause shall include adequate information for Government evaluation of the request, including--

(A) A description of the foreign and domestic construction materials;

(B) Unit of measure;

(C) Quantity;

(D) Price;

(E) Time of delivery or availability;

(F) Location of the construction project;

(G) Name and address of the proposed supplier; and

(H) A detailed justification of the reason for use of foreign construction materials cited in accordance with paragraph (b)(3) of this clause.

(ii) A request based on unreasonable cost shall include a reasonable survey of the market and a completed price comparison table in the format in paragraph (d) of this clause.

(iii) The price of construction material shall include all delivery costs to the construction site and any applicable duty (whether or not a duty-free certificate may be issued).

(iv) Any Contractor request for a determination submitted after contract award shall explain why the Contractor could not reasonably foresee the need for such determination and could not have requested the determination before contract award. If the Contractor does not submit a satisfactory explanation, the Contracting Officer need not make a determination.

(2) If the Government determines after contract award that an exception to the Buy American Act applies and the Contracting Officer and the Contractor negotiate adequate consideration, the Contracting Officer will modify the contract to allow use of the foreign construction material. However, when the basis for the exception is the unreasonable price of a domestic construction material, adequate consideration is not less than the differential established in paragraph (b)(4)(i) of this clause.

(3) Unless the Government determines that an exception to the Buy American Act applies, use of foreign construction material is noncompliant with the Buy American Act.

(d) Data. To permit evaluation of requests under paragraph (c) of this clause based on unreasonable cost, the Contractor shall include the following information and any applicable supporting data based on the survey of suppliers:

Foreign and Domestic Construction Materials Price Comparison

Construction material description	Unit of measure	Quantity	Price (dollars) \1\

Item 1:
Foreign construction material.... ....
Domestic construction material... ....
Item 2:
Foreign construction material.... ....
Domestic construction material... ....

\1\ Include all delivery costs to the construction site and any applicable duty (whether or not a duty-free entry certificate is issued).
List name, address, telephone number, and contact for suppliers surveyed. Attach copy of response; if oral, attach summary.
Include other applicable supporting information.

(End of clause)

52.225-13 RESTRICTIONS ON CERTAIN FOREIGN PURCHASES (JUL 2000)

(a) The Contractor shall not acquire, for use in the performance of this contract, any supplies or services originating from sources within, or that were located in or transported from or through, countries whose products are banned from importation into the United States under regulations of the Office of Foreign Assets Control, Department of the Treasury. Those countries are Cuba, Iran, Iraq, Libya, North Korea, Sudan, the territory of Afghanistan controlled by the Taliban, and Serbia (excluding the territory of Kosovo).

(b) The Contractor shall not acquire for use in the performance of this contract any supplies or services from entities controlled by the government of Iraq.

(c) The Contractor shall insert this clause, including this paragraph (c), in all subcontracts.

(End of clause)

52.227-1 AUTHORIZATION AND CONSENT (JUL 1995)

(a) The Government authorizes and consents to all use and manufacture, in performing this contract or any subcontract at any tier, of any invention described in and covered by a United States patent (1) embodied in the structure or composition of any article the delivery of which is accepted by the Government under this contract or (2) used in machinery, tools, or methods whose use necessarily results from compliance by the Contractor or a subcontractor with (i) specifications or written provisions forming a part of this contract or (ii) specific written instructions given by the Contracting Officer directing the manner of performance. The entire liability to the Government for infringement of a patent of the United States shall be determined solely by the provisions of the indemnity clause, if any, included in this contract or any subcontract hereunder (including any lower-tier subcontract), and the Government assumes liability for all other infringement to the extent of the authorization and consent hereinabove granted.

(b) The Contractor agrees to include, and require inclusion of, this clause, suitably modified to identify the parties, in all subcontracts at any tier for supplies or services (including construction, architect-engineer services, and materials, supplies, models, samples, and design or testing services expected to exceed the simplified acquisition threshold

(however, omission of this clause from any subcontract, including those at or below the simplified acquisition threshold, does not affect this authorization and consent.)

(End of clause)

52.227-2 NOTICE AND ASSISTANCE REGARDING PATENT AND COPYRIGHT INFRINGEMENT (AUG 1996)

(a) The Contractor shall report to the Contracting Officer, promptly and in reasonable written detail, each notice or claim of patent or copyright infringement based on the performance of this contract of which the Contractor has knowledge.

(b) In the event of any claim or suit against the Government on account of any alleged patent or copyright infringement arising out of the performance of this contract or out of the use of any supplies furnished or work or services performed under this contract, the Contractor shall furnish to the Government, when requested by the Contracting Officer, all evidence and information in possession of the Contractor pertaining to such suit or claim. Such evidence and information shall be furnished at the expense of the Government except where the Contractor has agreed to indemnify the Government.

(c) The Contractor agrees to include, and require inclusion of, this clause in all subcontracts at any tier for supplies or services (including construction and architect-engineer subcontracts and those for material, supplies, models, samples, or design or testing services) expected to exceed the simplified acquisition threshold at (FAR) 2.101.to exceed the dollar amount set forth in 13.000 of the Federal Acquisition Regulation (FAR).

(End of clause)

52.227-4 PATENT INDEMNITY--CONSTRUCTION CONTRACTS (APR 1984)

Except as otherwise provided, the Contractor agrees to indemnify the Government and its officers, agents, and employees against liability, including costs and expenses, for infringement upon any United States patent (except a patent issued upon an application that is now or may hereafter be withheld from issue pursuant to a Secrecy Order under 35 U.S.C. 181) arising out of performing this contract or out of the use or disposal by or for the account of the Government of supplies furnished or work performed under this contract.

(End of clause)

52.228-1 BID GUARANTEE (SEP 1996)

(a) Failure to furnish a bid guarantee in the proper form and amount, by the time set for opening of bids, may be cause for rejection of the bid.

(b) The bidder shall furnish a bid guarantee in the form of a firm commitment, e.g., bid bond supported by good and sufficient surety or sureties acceptable to the Government, postal money order, certified check, cashier's check, irrevocable letter of credit, or, under Treasury Department regulations, certain bonds or notes of the United States. The Contracting Officer will return bid guarantees, other than bid bonds, (1) to unsuccessful bidders as soon as practicable after the opening of bids, and (2) to the successful bidder upon execution of contractual documents and bonds (including any necessary coinsurance or reinsurance agreements), as required by the bid as accepted.-

(c) The amount of the bid guarantee shall be 20 percent of the bid price or $3,000,000.00, whichever is less.-

(d) If the successful bidder, upon acceptance of its bid by the Government within the period specified for acceptance, fails to execute all contractual documents or furnish executed bond(s) within 10 days after receipt of the forms by the bidder, the Contracting Officer may terminate the contract for default.-

(e) In the event the contract is terminated for default, the bidder is liable for any cost of acquiring the work that exceeds the amount of its bid, and the bid guarantee is available to offset the difference.

(End of clause)

52.228-2 ADDITIONAL BOND SECURITY (OCT 1997)

The Contractor shall promptly furnish additional security required to protect the Government and persons supplying labor or materials under this contract if--

(a) Any surety upon any bond, or issuing financial institution for other security, furnished with this contract becomes unacceptable to the Government.

(b) Any surety fails to furnish reports on its financial condition as required by the Government;

(c) The contract price is increased so that the penal sum of any bond becomes inadequate in the opinion of the Contracting Officer; or

(d) An irrevocable letter of credit (ILC) used as security will expire before the end of the period of required security. If the Contractor does not furnish an acceptable extension or replacement ILC, or other acceptable substitute, at least 30 days before an ILC's scheduled expiration, the Contracting officer has the right to immediately draw on the ILC.

(End of clause)

52.228-5 INSURANCE--WORK ON A GOVERNMENT INSTALLATION (JAN 1997)

(a) The Contractor shall, at its own expense, provide and maintain during the entire performance of this contract, at least the kinds and minimum amounts of insurance required in the Schedule or elsewhere in the contract.

(b) Before commencing work under this contract, the Contractor shall notify the Contracting Officer in writing that the required insurance has been obtained. The policies evidencing required insurance shall contain an endorsement to the effect that any cancellation or any material change adversely affecting the Government's interest shall not be effective (1) for such period as the laws of the State in which this contract is to be performed prescribe, or (2) until 30 days after the insurer or the Contractor gives written notice to the Contracting Officer, whichever period is longer.

(c) The Contractor shall insert the substance of this clause, including this paragraph (c), in subcontracts under this contract that require work on a Government installation and shall require subcontractors to provide and maintain the insurance required in the Schedule or elsewhere in the contract. The Contractor shall maintain a copy of all subcontractors' proofs of required insurance, and shall make copies available to the Contracting Officer upon request.

(End of clause)

52.228-11 PLEDGES OF ASSETS (FEB 1992)

(a) Offerors shall obtain from each person acting as an individual surety on a bid guarantee, a performance bond, or a payment bond--

(1) Pledge of assets; and

(2) Standard Form 28, Affidavit of Individual Surety.

(b) Pledges of assets from each person acting as an individual surety shall be in the form of--

(1) Evidence of an escrow account containing cash, certificates of deposit, commercial or Government securities, or other assets described in FAR 28.203-2 (except see 28.203-2(b)(2) with respect to Government securities held in book entry form) and/or;

(2) A recorded lien on real estate. The offeror will be required to provide--

(i) Evidence of title in the form of a certificate of title prepared by a title insurance company approved by the United States Department of Justice. This title evidence must show fee simple title vested in the surety along with any concurrent owners; whether any real estate taxes are due and payable; and any recorded encumbrances against the property, including the lien filed in favor of the Government as required by FAR 28.203-3(d);

(ii) Evidence of the amount due under any encumbrance shown in the evidence of title;

(iii) A copy of the current real estate tax assessment of the property or a current appraisal dated no earlier than 6 months prior to the date of the bond, prepared by a professional appraiser who certifies that the appraisal has been conducted in accordance with the generally accepted appraisal standards as reflected in the Uniform Standards of Professional Appraisal Practice, as promulgated by the Appraisal Foundation.

(End of clause)

52.228-12 PROSPECTIVE SUBCONTRACTOR REQUESTS FOR BONDS. (OCT 1995)

In accordance with Section 806(a)(3) of Pub. L. 102-190, as amended by Sections 2091 and 8105 of Pub. L. 103-355, upon the request of a prospective subcontractor or supplier offering to furnish labor or material for the performance of this contract for which a payment bond has been furnished to the Government pursuant to the Miller Act, the Contractor shall promptly provide a copy of such payment bond to the requester.

(End of clause)

52.228-14 IRREVOCABLE LETTER OF CREDIT (DEC 1999)

(a) “Irrevocable letter of credit” (ILC), as used in this clause, means a written commitment by a federally insured financial institution to pay all or part of a stated amount of money, until the expiration date of the letter, upon presentation by the Government (the beneficiary) of a written demand therefor. Neither the financial institution nor the offeror/Contractor can revoke or condition the letter of credit.

(b) If the offeror intends to use an ILC in lieu of a bid bond, or to secure other types of bonds such as performance and payment bonds, the letter of credit and letter of confirmation formats in paragraphs (e) and (f) of this clause shall

be used.

(c) The letter of credit shall be irrevocable, shall require presentation of no document other than a written demand and the ILC (including confirming letter, if any), shall be issued/confirmed by an acceptable federally insured financial institution as provided in paragraph (d) of this clause, and--

(1) If used as a bid guarantee, the ILC shall expire no earlier than 60 days after the close of the bid acceptance period;

(2) If used as an alternative to corporate or individual sureties as security for a performance or payment bond, the offeror/Contractor may submit an ILC with an initial expiration date estimated to cover the entire period for which financial security is required or may submit an ILC with an initial expiration date that is a minimum period of one year from the date of issuance. The ILC shall provide that, unless the issuer provides the beneficiary written notice of non-renewal at least 60 days in advance of the current expiration date, the ILC is automatically extended without amendment for one year from the expiration date, or any future expiration date, until the period of required coverage is completed and the Contracting Officer provides the financial institution with a written statement waiving the right to payment. The period of required coverage shall be:

(i) For contracts subject to the Miller Act, the later of--

(A) One year following the expected date of final payment;

(B) For performance bonds only, until completion of any warranty period; or

(C) For payment bonds only, until resolution of all claims filed against the payment bond during the one-year period following final payment.

(ii) For contracts not subject to the Miller Act, the later of--

(A) 90 days following final payment; or

(B) For performance bonds only, until completion of any warranty period.

(d) Only federally insured financial institutions rated investment grade or higher shall issue or confirm the ILC. The offeror/Contractor shall provide the Contracting Officer a credit rating that indicates the financial institution has the required rating(s) as of the date of issuance of the ILC. Unless the financial institution issuing the ILC had letter of credit business of less than $25 million in the past year, ILCs over $5 million must be confirmed by another acceptable financial institution that had letter of credit business of less than $25 million in the past year.

(e) The following format shall be used by the issuing financial institution to create an ILC:

_____

[Issuing Financial Institution's Letterhead or Name and Address]

Issue Date _____

IRREVOCABLE LETTER OF CREDIT NO. _____

Account party's name _____

Account party's address _____

For Solicitation No. _____(for reference only)

TO: [U.S. Government agency]

[U.S. Government agency's address]

1. We hereby establish this irrevocable and transferable Letter of Credit in your favor for one or more drawings up to United States $_____. This Letter of Credit is payable at [issuing financial institution's and, if any, confirming financial institution's] office at [issuing financial institution's address and, if any, confirming financial institution's address] and expires with our close of business on _____, or any automatically extended expiration date.

2. We hereby undertake to honor your or the transferee's sight draft(s) drawn on the issuing or, if any, the confirming financial institution, for all or any part of this credit if presented with this Letter of Credit and confirmation, if any, at the office specified in paragraph 1 of this Letter of Credit on or before the expiration date or any automatically extended expiration date.

3. [This paragraph is omitted if used as a bid guarantee, and subsequent paragraphs are renumbered.] It is a condition of this Letter of Credit that it is deemed to be automatically extended without amendment for one year from the expiration date hereof, or any future expiration date, unless at least 60 days prior to any expiration date, we notify you or the transferee by registered mail, or other receipted means of delivery, that we elect not to consider this Letter of Credit renewed for any such additional period. At the time we notify you, we also agree to notify the account party (and confirming financial institution, if any) by the same means of delivery.

4. This Letter of Credit is transferable. Transfers and assignments of proceeds are to be effected without charge to either the beneficiary or the transferee/assignee of proceeds. Such transfer or assignment shall be only at the written direction of the Government (the beneficiary) in a form satisfactory to the issuing financial institution and the confirming financial institution, if any.

5. This Letter of Credit is subject to the Uniform Customs and Practice (UCP) for Documentary Credits, 1993 Revision, International Chamber of Commerce Publication No. 500, and to the extent not inconsistent therewith, to the laws of _____ [state of confirming financial institution, if any, otherwise state of issuing financial institution].

6. If this credit expires during an interruption of business of this financial institution as described in Article 17 of the UCP, the financial institution specifically agrees to effect payment if this credit is drawn against within 30 days after the resumption of our business.

Sincerely,

_____

[Issuing financial institution]

(f) The following format shall be used by the financial institution to confirm an ILC:

_____
[Confirming Financial Institution's Letterhead or Name and Address]

(Date) _____

Our Letter of Credit Advice Number _____

Beneficiary: _____ [U.S. Government agency]

Issuing Financial Institution: _____

Issuing Financial Institution's LC No.: _____

Gentlemen:

1. We hereby confirm the above indicated Letter of Credit, the original of which is attached, issued by _____ [name of issuing financial institution] for drawings of up to United States dollars _____/U.S. $_____ and expiring with our close of business on _____ [the expiration date], or any automatically extended expiration date.

2. Draft(s) drawn under the Letter of Credit and this Confirmation are payable at our office located at _____.

3. We hereby undertake to honor sight draft(s) drawn under and presented with the Letter of Credit and this Confirmation at our offices as specified herein.

4. [This paragraph is omitted if used as a bid guarantee, and subsequent paragraphs are renumbered.] It is a condition of this confirmation that it be deemed automatically extended without amendment for one year from the expiration date hereof, or any automatically extended expiration date, unless:

(a) At least 60 days prior to any such expiration date, we shall notify the Contracting Officer, or the transferee and the issuing financial institution, by registered mail or other receipted means of delivery, that we elect not to consider this confirmation extended for any such additional period; or

(b) The issuing financial institution shall have exercised its right to notify you or the transferee, the account party, and ourselves, of its election not to extend the expiration date of the Letter of Credit.

5. This confirmation is subject to the Uniform Customs and Practice (UCP) for Documentary Credits, 1993 Revision, International Chamber of Commerce Publication No. 500, and to the extent not inconsistent therewith, to the laws of _____ [state of confirming financial institution].

6. If this confirmation expires during an interruption of business of this financial institution as described in Article 17 of the UCP, we specifically agree to effect payment if this credit is drawn against within 30 days after the resumption of our business.

Sincerely,

_____

[Confirming financial institution]

(g) The following format shall be used by the Contracting Officer for a sight draft to draw on the Letter of Credit:

SIGHT DRAFT

_____

[City, State]

(Date) _____

[Name and address of financial institution]

Pay to the order of _____ [Beneficiary Agency] _____ the sum of United States $_____. This draft is drawn under Irrevocable Letter of Credit No. _____.

_____

[Beneficiary Agency]

By: _____

(End of clause)

52.228-15 PERFORMANCE AND PAYMENT BONDS--CONSTRUCTION (JUL 2000)-

(a) Definitions. As used in this clause--

Original contract price means the award price of the contract; or, for requirements contracts, the price payable for the estimated total quantity; or, for indefinite-quantity contracts, the price payable for the specified minimum quantity. Original contract price does not include the price of any options, except those options exercised at the time of contract award.

(b) Amount of required bonds. Unless the resulting contract price is $100,000 or less, the successful offeror shall furnish performance and payment bonds to the Contracting Officer as follows:

(1) Performance bonds (Standard Form 25). The penal amount of performance bonds at the time of contract award shall be 100 percent of the original contract price.

(2) Payment Bonds (Standard Form 25-A). The penal amount of payment bonds at the time of contract award shall be 100 percent of the original contract price.

(3) Additional bond protection. (i) The Government may require additional performance and payment bond protection if the contract price is increased. The increase in protection generally will equal 100 percent of the increase in contract price.

(ii) The Government may secure the additional protection by directing the Contractor to increase the penal amount of the existing bond or to obtain an additional bond.

(c) Furnishing executed bonds. The Contractor shall furnish all executed bonds, including any necessary reinsurance agreements, to the Contracting Officer, within the time period specified in the Bid Guarantee provision of the solicitation, or otherwise specified by the Contracting Officer, but in any event, before starting work.

(d) Surety or other security for bonds. The bonds shall be in the form of firm commitment, supported by corporate sureties whose names appear on the list contained in Treasury Department Circular 570, individual sureties, or by other acceptable security such as postal money order, certified check, cashier's check, irrevocable letter of credit, or, in accordance with Treasury Department regulations, certain bonds or notes of the United States. Treasury Circular 570 is published in the Federal Register or may be obtained from the U.S. Department of Treasury, Financial Management Service, Surety Bond Branch, 401 14th Street, NW, 2nd Floor, West Wing, Washington, DC 20227.

(e) Notice of subcontractor waiver of protection (40 U.S.C. 270b(c). Any waiver of the right to sue on the payment bond is void unless it is in writing, signed by the person whose right is waived, and executed after such person has first furnished labor or material for use in the performance of the contract.

(End of clause)

52.229-3 FEDERAL, STATE, AND LOCAL TAXES (JAN 1991)

(a) "Contract date," as used in this clause, means the date set for bid opening or, if this is a negotiated contract or a modification, the effective date of this contract or modification.

"All applicable Federal, State, and local taxes and duties," as used in this clause, means all taxes and duties, in effect on the contract date, that the taxing authority is imposing and collecting on the transactions or property covered by this contract.

"After-imposed Federal tax," as used in this clause, means any new or increased Federal excise tax or duty, or tax that was exempted or excluded on the contract date but whose exemption was later revoked or reduced during the contract period, on the transactions or property covered by this contract that the Contractor is required to pay or bear as the result of legislative, judicial, or administrative action taking effect after the contract date. It does not include social security tax or other employment taxes.
"After-relieved Federal tax," as used in this clause, means any amount of Federal excise tax or duty, except social security or other employment taxes, that would otherwise have been payable on the transactions or property covered by this contract, but which the Contractor is not required to pay or bear, or for which the Contractor obtains a refund or drawback, as the result of legislative, judicial, or administrative action taking effect after the contract date.

(b) The contract price includes all applicable Federal, State, and local taxes and duties.

(c) The contract price shall be increased by the amount of any after-imposed Federal tax, provided the Contractor warrants in writing that no amount for such newly imposed Federal excise tax or duty or rate increase was included in the contract price, as a contingency reserve or otherwise.

(d) The contract price shall be decreased by the amount of any after-relieved Federal tax.

(e) The contract price shall be decreased by the amount of any Federal excise tax or duty, except social security or other employment taxes, that the Contractor is required to pay or bear, or does not obtain a refund of, through the Contractor's fault, negligence, or failure to follow instructions of the Contracting Officer.

(f) No adjustment shall be made in the contract price under this clause unless the amount of the adjustment exceeds $250.

(g) The Contractor shall promptly notify the Contracting Officer of all matters relating to any Federal excise tax or duty that reasonably may be expected to result in either an increase or decrease in the contract price and shall take appropriate action as the Contracting Officer directs.

(h) The Government shall, without liability, furnish evidence appropriate to establish exemption from any Federal, State, or local tax when the Contractor requests such evidence and a reasonable basis exists to sustain the exemption.

(End of clause)

52.229-5 TAXES--CONTRACTS PERFORMED IN U.S. POSSESSIONS OR PUERTO RICO (APR 1984)

The term "local taxes," as used in the Federal, State, and local taxes clause of this contract, includes taxes imposed by a possession of the United States or by Puerto Rico.

(End of clause)

52.232-5 PAYMENTS UNDER FIXED-PRICE CONSTRUCTION CONTRACTS (SEP 2002)

(a) Payment of price. The Government shall pay the Contractor the contract price as provided in this contract.

(b) Progress payments. The Government shall make progress payments monthly as the work proceeds, or at more frequent intervals as determined by the Contracting Officer, on estimates of work accomplished which meets the standards of quality established under the contract, as approved by the Contracting Officer.

(1) The Contractor's request for progress payments shall include the following substantiation:

(i) An itemization of the amounts requested, related to the various elements of work required by the contract covered by the payment requested.

(ii) A listing of the amount included for work performed by each subcontractor under the contract.

(iii) A listing of the total amount of each subcontract under the contract.

(iv) A listing of the amounts previously paid to each such subcontractor under the contract.

(v) Additional supporting data in a form and detail required by the Contracting Officer.

(2) In the preparation of estimates, the Contracting Officer may authorize material delivered on the site and preparatory work done to be taken into consideration. Material delivered to the Contractor at locations other than the site also may be taken into consideration if--

(i) Consideration is specifically authorized by this contract; and

(ii) The Contractor furnishes satisfactory evidence that it has acquired title to such material and that the material will be used to perform this contract.

(c) Contractor certification. Along with each request for progress payments, the Contractor shall furnish the following certification, or payment shall not be made: (However, if the Contractor elects to delete paragraph (c)(4) from the certification, the certification is still acceptable.)

I hereby certify, to the best of my knowledge and belief, that--

(1) The amounts requested are only for performance in accordance with the specifications, terms, and conditions of the contract;

(2) All payments due to subcontractors and suppliers from previous payments received under the contract have been made, and timely payments will be made from the proceeds of the payment covered by this certification, in accordance with subcontract agreements and the requirements of chapter 39 of Title 31, United States Code;

(3) This request for progress payments does not include any amounts which the prime contractor intends to withhold or retain from a subcontractor or supplier in accordance with the terms and conditions of the subcontract; and

(4) This certification is not to be construed as final acceptance of a subcontractor's performance.

_____

(Name)

_____

(Title)

_____

(Date)

(d) Refund of unearned amounts. If the Contractor, after making a certified request for progress payments, discovers that a portion or all of such request constitutes a payment for performance by the Contractor that fails to conform to the specifications, terms, and conditions of this contract (hereinafter referred to as the "unearned amount"), the Contractor shall--

(1) Notify the Contracting Officer of such performance deficiency; and

(2) Be obligated to pay the Government an amount (computed by the Contracting Officer in the manner provided in paragraph (j) of this clause) equal to interest on the unearned amount from the 8th day after the date of receipt of the unearned amount until--

(i) The date the Contractor notifies the Contracting Officer that the performance deficiency has been corrected; or

(ii) The date the Contractor reduces the amount of any subsequent certified request for progress payments by an amount equal to the unearned amount.

(e) Retainage. If the Contracting Officer finds that satisfactory progress was achieved during any period for which a progress payment is to be made, the Contracting Officer shall authorize payment to be made in full. However, if satisfactory progress has not been made, the Contracting Officer may retain a maximum of 10 percent of the amount of the payment until satisfactory progress is achieved. When the work is substantially complete, the Contracting Officer may retain from previously withheld funds and future progress payments that amount the Contracting Officer considers adequate for protection of the Government and shall release to the Contractor all the remaining withheld funds. Also, on completion and acceptance of each separate building, public work, or other division of the contract, for which the price is stated separately in the contract, payment shall be made for the completed work without retention of a percentage.

(f) Title, liability, and reservation of rights. All material and work covered by progress payments made shall, at the time of payment, become the sole property of the Government, but this shall not be construed as--

(1) Relieving the Contractor from the sole responsibility for all material and work upon which payments have been made or the restoration of any damaged work; or

(2) Waiving the right of the Government to require the fulfillment of all of the terms of the contract.

(g) Reimbursement for bond premiums. In making these progress payments, the Government shall, upon request, reimburse the Contractor for the amount of premiums paid for performance and payment bonds (including coinsurance and reinsurance agreements, when applicable) after the Contractor has furnished evidence of full payment to the surety. The retainage provisions in paragraph (e) of this clause shall not apply to that portion of progress payments attributable to bond premiums.

(h) Final payment. The Government shall pay the amount due the Contractor under this contract after--

(1) Completion and acceptance of all work;

(2) Presentation of a properly executed voucher; and

(3) Presentation of release of all claims against
the Government arising by virtue of this contract, other than claims, in stated amounts, that the Contractor has specifically excepted from the operation of the release. A release may also be required of the assignee if the Contractor's claim to amounts payable under this contract has been assigned under the Assignment of Claims Act of 1940 (31 U.S.C. 3727 and 41 U.S.C. 15).

(i) Limitation because of undefinitized work. Notwithstanding any provision of this contract, progress payments shall not exceed 80 percent on work accomplished on undefinitized contract actions. A "contract action" is any action resulting in a contract, as defined in FAR Subpart 2.1, including contract modifications for additional supplies or services, but not including contract modifications that are within the scope and under the terms of the contract, such as contract modifications issued pursuant to the Changes clause, or funding and other administrative changes.

(j) Interest computation on unearned amounts. In accordance with 31 U.S.C. 3903(c)(1), the amount payable under subparagraph (d)(2) of this clause shall be--

(1) Computed at the rate of average bond equivalent rates of 91-day Treasury bills auctioned at the most recent auction of such bills prior to the date the Contractor receives the unearned amount; and

(2) Deducted from the next available payment to the Contractor.

(End of clause)

52.232-10 PAYMENTS UNDER FIXED-PRICE ARCHITECT-ENGINEER CONTRACTS (AUG 1987)

(a) Estimates shall be made monthly of the amount and value of the work and services performed by the Contractor under this contract which meet the standards of quality established under this contract. The estimates shall be prepared by the Contractor and accompanied by any supporting data required by the Contracting Officer.

(b) Upon approval of the estimate by the Contracting Officer, payment upon properly executed vouchers shall be made to the Contractor, as soon as practicable, of 90 percent of the approved amount, less all previous payments; provided, that payment may be made in full during any months in which the Contracting Officer determines that performance has been satisfactory. Also, whenever the Contracting Officer determines that the work is substantially complete and that the amount retained is in excess of the amount adequate for the protection of the Government, the Contracting Officer may release the excess amount to the Contractor.

(c) Upon satisfactory completion by the Contractor and acceptance by the Contracting Officer of the work done by the Contractor under the "Statement of Architect-Engineer Services", the Contractor will be paid the unpaid balance of any money due for work under the statement, including retained percentages relating to this portion of the work. Upon satisfactory completion and final acceptance of the construction work, the Contractor shall be paid any unpaid balance of money due under this contract.

(d) Before final payment under the contract, or before settlement upon termination of the contract, and as a condition precedent thereto, the Contractor shall execute and deliver to the Contracting Officer a release of all claims against the Government arising under or by virtue of this contract, other than any claims that are specifically excepted by the Contractor from the operation of the release in amounts stated in the release.

(e) Notwithstanding any other provision in this contract, and specifically paragraph (b) of this clause, progress

payments shall not exceed 80 percent on work accomplished on undefinitized contract actions. A "contract action" is any action resulting in a contract, as defined in FAR Subpart 2.1, including contract modifications for additional supplies or services, but not including contract modifications that are within the scope and under the terms of the contract, such as contract modifications issued pursuant to the Changes clause, or funding and other administrative changes.

(End of clause)

52.232-17 INTEREST (JUNE 1996)

(a) Except as otherwise provided in this contract under a Price Reduction for Defective Cost or Pricing Data clause or a Cost Accounting Standards clause, all amounts that become payable by the Contractor to the Government under this contract (net of any applicable tax credit under the Internal Revenue Code (26 U.S.C. 1481)) shall bear simple interest from the date due until paid unless paid within 30 days of becoming due. The interest rate shall be the interest rate established by the Secretary of the Treasury as provided in Section 12 of the Contract Disputes Act of 1978 (Public Law 95-563), which is applicable to the period in which the amount becomes due, as provided in paragraph (b) of this clause, and then at the rate applicable for each six-month period as fixed by the Secretary until the amount is paid. reproduce, prepare derivative works, distribute copies to the public, and (b) Amounts shall be due at the earliest of the following dates:

(1) The date fixed under this contract.

(2) The date of the first written demand for payment consistent with this contract, including any demand resulting from a default termination.

(3) The date the Government transmits to the Contractor a proposed supplemental agreement to confirm completed negotiations establishing the amount of debt.

(4) If this contract provides for revision of prices, the date of written notice to the Contractor stating the amount of refund payable in connection with a pricing proposal or a negotiated pricing agreement not confirmed by contract modification.

(c) The interest charge made under this clause may be reduced under the procedures prescribed in 32.614-2 of the Federal Acquisition Regulation in effect on the date of this contract.

(End of clause)

52.232-23 ASSIGNMENT OF CLAIMS (JAN 1986) - ALTERNATE I (APR 1984)

(a) The Contractor, under the Assignment of Claims Act, as amended, 31 U.S.C. 3727, 41 U.S.C. 15 (hereafter referred to as "the Act"), may assign its rights to be paid amounts due or to become due as a result of the performance of this contract to a bank, trust company, or other financing institution, including any Federal lending agency. The assignee under such an assignment may thereafter further assign or reassign its right under the original assignment to any type of financing institution described in the preceding sentence. Unless otherwise stated in this contract, payments to an assignee of any amounts due or to become due under this contract shall not, to the extent specified in the Act, be subject to reduction or setoff.

(b) Any assignment or reassignment authorized under the Act and this clause shall cover all unpaid amounts payable under this contract, and shall not be made to more than one party, except that an assignment or reassignment may be

made to one party as agent or trustee for two or more parties participating in the financing of this contract.

(c) The Contractor shall not furnish or disclose to any assignee under this contract any classified document (including this contract) or information related to work under this contract until the Contracting Officer authorizes such action in writing.

(End of clause)

52.232-26 PROMPT PAYMENT FOR FIXED-PRICE ARCHITECT-ENGINEER CONTRACTS (FEB 2002)

Notwithstanding any other payment terms in this contract, the Government will make invoice payments under the terms and conditions specified in this clause. The Government considers payment as being made on the day a check is dated or the date of an electronic funds transfer. Definitions of pertinent terms are set forth in sections 2.101, 32.001, and 32.902 of the Federal Acquisition Regulation. All days referred to in this clause are calendar days, unless otherwise specified. (However, see paragraph (a)(3) of this clause concerning payments due on Saturdays, Sundays, and legal holidays.)

(a) Invoice payments--(1) Due date. The due date for making invoice payments is--

(i) For work or services completed by the Contractor, the later of the following two events:

(A) The 30th day after the designated billing office receives a proper invoice from the Contractor (except as provided in paragraph (a)(1)(iii) of this clause).

(B) The 30th day after Government acceptance of the work or services completed by the Contractor. For a final invoice, when the payment amount is subject to contract settlement actions (e.g., release of claims), acceptance is deemed to occur on the effective date of the settlement.

(ii) The due date for progress payments is the 30th day after Government approval of Contractor estimates of work or services accomplished.

(iii) If the designated billing office fails to annotate the invoice or payment request with the actual date of receipt at the time of receipt, the payment due date is the 30th day after the date of the Contractor's invoice or payment request, provided the designated billing office receives a proper invoice or payment request and there is no disagreement over quantity, quality, or Contractor compliance with contract requirements.

(2) Contractor's invoice. The Contractor shall prepare and submit invoices to the designated billing office specified in the contract. A proper invoice must include the items listed in paragraphs (a)(2)(i) through (a)(2)(x) of this clause. If the invoice does not comply with these requirements, the designated billing office will return it within 7 days after receipt, with the reasons why it is not a proper invoice. When computing any interest penalty owed the Contractor, the Government will take into account if the Government notifies the Contractor of an improper invoice in an untimely manner.

(i) Name and address of the Contractor.

(ii) Invoice date and invoice number. (The Contractor should date invoices as close as possible to the date of mailing or transmission.)

(iii) Contract number or other authorization for work or services performed (including order number and contract line item number).

(iv) Description of work or services performed.

(v) Delivery and payment terms (e.g., discount for prompt payment terms).

(vi) Name and address of Contractor official to whom payment is to be sent (must be the same as that in the contract or in a proper notice of assignment).

(vii) Name (where practicable), title, phone number, and mailing address of person to notify in the event of a defective invoice.

(viii) Taxpayer Identification Number (TIN). The Contractor shall include its TIN on the invoice only if required elsewhere in this contract.

(ix) Electronic funds transfer (EFT) banking information.

(A) The Contractor shall include EFT banking information on the invoice only if required elsewhere in this contract.

(B) If EFT banking information is not required to be on the invoice, in order for the invoice to be a proper invoice, the Contractor shall have submitted correct EFT banking information in accordance with the applicable solicitation provision (e.g., 52.232-38, Submission of Electronic Funds Transfer Information with Offer), contract clause (e.g., 52.232-33, Payment by Electronic Funds Transfer--Central Contractor Registration, or 52.232-34,Payment by Electronic Funds Transfer--Other Than Central Contractor Registration), or applicable agency procedures.

(C) EFT banking information is not required if the Government waived the requirement to pay by EFT.

(x) Any other information or documentation required by the contract.

(3) Interest penalty. The designated payment office will pay an interest penalty automatically, without request from the Contractor, if payment is not made by the due date and the conditions listed in paragraphs (a)(3)(i) through (a)(3)(iii) of this clause are met, if applicable. However, when the due date falls on a Saturday, Sunday, or legal holiday, the designated payment office may make payment on the following working day without incurring a late payment interest penalty.

(i) The designated billing office received a proper invoice.

(ii) The Government processed a receiving report or other Government documentation authorizing payment and there was no disagreement over quantity, quality, Contractor compliance with any contract term or condition, or requested progress payment amount.

(iii) In the case of a final invoice for any balance of funds due the Contractor for work or services performed, the amount was not subject to further contract settlement actions between the Government and the Contractor.

(4) Computing penalty amount. The Government will compute the interest penalty in accordance with the Office of Management and Budget prompt payment regulations at 5 CFR part 1315.

(i) For the sole purpose of computing an interest penalty that might be due the Contractor, Government acceptance or approval is deemed to occur constructively as shown in paragraphs (a)(4)(i)(A) and (B) of this clause. If actual acceptance or approval occurs within the constructive acceptance or approval period, the Government will base the determination of an interest penalty on the actual date of acceptance or approval. Constructive acceptance or constructive approval requirements do not apply if there is a disagreement over quantity, quality, Contractor compliance with a contract provision, or requested progress payment amounts. These requirements also do not compel Government officials to accept work or services, approve Contractor estimates, perform contract administration functions, or make payment prior to fulfilling their responsibilities.

(A) For work or services completed by the Contractor, Government acceptance is deemed to occur constructively on the 7th day after the Contractor completes the work or services in accordance with the terms and conditions of the contract.

(B) For progress payments, Government approval is deemed to occur on the 7th day after the designated billing office receives the Contractor estimates.

(ii) The prompt payment regulations at 5 CFR 1315.10(c) do not require the Government to pay interest penalties if payment delays are due to disagreement between the Government and the Contractor over the payment amount or other issues involving contract compliance, or on amounts temporarily withheld or retained in accordance with the terms of the contract. The Government and the Contractor shall resolve claims involving disputes, and any interest that may be payable in accordance with the clause at FAR 52.233-1, Disputes.

(5) Discounts for prompt payment. The designated payment office will pay an interest penalty automatically, without request from the Contractor, if the Government takes a discount for prompt payment improperly. The Government will calculate the interest penalty in accordance with 5 CFR part 1315.

(6) Additional interest penalty. (i) The designated payment office will pay a penalty amount, calculated in accordance with the prompt payment regulations at 5 CFR part 1315, in addition to the interest penalty amount only if--

(A) The Government owes an interest penalty of $1 or more;

(B) The designated payment office does not pay the interest penalty within 10 days after the date the invoice amount is paid; and

(C) The contractor makes a written demand to the designated payment office for additional penalty payment, in accordance with paragraph (a)(6)(ii) of this clause, postmarked not later than 40 days after the date the invoice amount is paid.

(ii)(A) The Contractor shall support written demands for additional penalty payments with the following data. The Government will not request any additional data. The Contractor shall--

(1) Specifically assert that late payment interest is due under a specific invoice, and request payment of all overdue late payment interest penalty and such additional penalty as may be required;

(2) Attach a copy of the invoice on which the unpaid late payment interest is due; and

(3) State that payment of the principal has been received, including the date of receipt.

(B) If there is no postmark or the postmark is illegible--

(1) The designated payment office that receives the demand will annotate it with the date of receipt, provided the demand is received on or before the 40th day after payment was made; or

(2) If the designated payment office fails to make the required annotation, the Government will determine the demand's validity based on the date the Contractor has placed on the demand, provided such date is no later than the 40th day after payment was made.

(iii) The additional penalty does not apply to payments regulated by other Government regulations (e.g., payments under utility contracts subject to tariffs and regulation).

(b) Contract financing payments. If this contract provides for contract financing, the Government will make contract financing payments in accordance with the applicable contract financing clause.

(c) Overpayments. If the Contractor becomes aware of a duplicate payment or that the Government has otherwise overpaid on an invoice payment, the Contractor shall immediately notify the Contracting Officer and request instructions for disposition of the overpayment.

(End of clause)

52.232-27 PROMPT PAYMENT FOR CONSTRUCTION CONTRACTS (FEB 2002)

Notwithstanding any other payment terms in this contract, the Government will make invoice payments under the terms and conditions specified in this clause. The Government considers payment as being made on the day a check is dated or the date of an electronic funds transfer. Definitions of pertinent terms are set forth in sections 2.101, 32.001, and 32.902 of the Federal Acquisition Regulation. All days referred to in this clause are calendar days, unless otherwise specified. (However, see paragraph (a)(3) concerning payments due on Saturdays, Sundays, and legal holidays.)

(a) Invoice payments--(1) Types of invoice payments. For purposes of this clause, there are several types of invoice payments that may occur under this contract, as follows:

(i) Progress payments, if provided for elsewhere in this contract, based on Contracting Officer approval of the estimated amount and value of work or services performed, including payments for reaching milestones in any project.

(A) The due date for making such payments is 14 days after the designated billing office receives a proper payment request. If the designated billing office fails to annotate the payment request with the actual date of receipt at the time of receipt, the payment due date is the 14th day after the date of the Contractor's payment request, provided the designated billing office receives a proper payment request and there is no disagreement over quantity, quality, or Contractor compliance with contract requirements.

(B) The due date for payment of any amounts retained by the Contracting Officer in accordance with the clause at 52.232-5, Payments Under Fixed-Price Construction Contracts, is as specified in the contract or, if not specified, 30 days after approval by the Contracting Officer for release to the Contractor.

(ii) Final payments based on completion and acceptance of all work and presentation of release of all claims against the Government arising by virtue of the contract, and payments for partial deliveries that have been accepted by the Government (e.g., each separate building, public work, or other division of the contract for which the price is stated separately in the contract).

(A) The due date for making such payments is the later of the following two events:

(1) The 30th day after the designated billing office receives a proper invoice from the Contractor.

(2) The 30th day after Government acceptance of the work or services completed by the Contractor. For a final invoice when the payment amount is subject to contract settlement actions (e.g., release of claims), acceptance is deemed to occur on the effective date of the contract settlement.

(B) If the designated billing office fails to annotate the invoice with the date of actual receipt at the time of receipt, the invoice payment due date is the 30th day after the date of the Contractor's invoice, provided the designated billing

office receives a proper invoice and there is no disagreement over quantity, quality, or Contractor compliance with contract requirements.

(2) Contractor's invoice. The Contractor shall prepare and submit invoices to the designated billing office specified in the contract. A proper invoice must include the items listed in paragraphs (a)(2)(i) through (a)(2)(xi) of this clause. If the invoice does not comply with these requirements, the designated billing office must return it within 7 days after receipt, with the reasons why it is not a proper invoice. When computing any interest penalty owed the Contractor, the Government will take into account if the Government notifies the Contractor of an improper invoice in an untimely manner.

(i) Name and address of the Contractor.

(ii) Invoice date and invoice number. (The Contractor should date invoices as close as possible to the date of mailing or transmission.)

(iii) Contract number or other authorization for work or services performed (including order number and contract line item number).

(iv) Description of work or services performed.

(v) Delivery and payment terms (e.g., discount for prompt payment terms).

(vi) Name and address of Contractor official to whom payment is to be sent (must be the same as that in the contract or in a proper notice of assignment).

(vii) Name (where practicable), title, phone number, and mailing address of person to notify in the event of a defective invoice.

(viii) For payments described in paragraph (a)(1)(i) of this clause, substantiation of the amounts requested and certification in accordance with the requirements of the clause at 52.232-5, Payments Under Fixed-Price Construction Contracts.

(ix) Taxpayer Identification Number (TIN). The Contractor shall include its TIN on the invoice only if required elsewhere in this contract.

(x) Electronic funds transfer (EFT) banking information.

(A) The Contractor shall include EFT banking information on the invoice only if required elsewhere in this contract.

(B) If EFT banking information is not required to be on the invoice, in order for the invoice to be a proper invoice, the Contractor shall have submitted correct EFT banking information in accordance with the applicable solicitation provision (e.g., 52.232-38, Submission of Electronic Funds Transfer Information with Offer), contract clause (e.g., 52.232-33, Payment by Electronic Funds Transfer--Central Contractor Registration, or 52.232-34, Payment by Electronic Funds Transfer--Other Than Central Contractor Registration), or applicable agency procedures.

(C) EFT banking information is not required if the Government waived the requirement to pay by EFT.

(xi) Any other information or documentation required by the contract.

(3) Interest penalty. The designated payment office will pay an interest penalty automatically, without request from the Contractor, if payment is not made by the due date and the conditions listed in paragraphs (a)(3)(i) through (a)(3)(iii) of this clause are met, if applicable. However, when the due date falls on a Saturday, Sunday, or legal

holiday, the designated payment office may make payment on the following working day without incurring a late payment interest penalty.

(i) The designated billing office received a proper invoice.

(ii) The Government processed a receiving report or other Government documentation authorizing payment and there was no disagreement over quantity, quality, Contractor compliance with any contract term or condition, or requested progress payment amount.

(iii) In the case of a final invoice for any balance of funds due the Contractor for work or services performed, the amount was not subject to further contract settlement actions between the Government and the Contractor.

(4) Computing penalty amount. The Government will compute the interest penalty in accordance with the Office of Management and Budget prompt payment regulations at 5 CFR part 1315.

(i) For the sole purpose of computing an interest penalty that might be due the Contractor for payments described in paragraph (a)(1)(ii) of this clause, Government acceptance or approval is deemed to occur constructively on the 7th day after the Contractor has completed the work or services in accordance with the terms and conditions of the contract. If actual acceptance or approval occurs within the constructive acceptance or approval period, the Government will base the determination of an interest penalty on the actual date of acceptance or approval. Constructive acceptance or constructive approval requirements do not apply if there is a disagreement over quantity, quality, or Contractor compliance with a contract provision. These requirements also do not compel Government officials to accept work or services, approve Contractor estimates, perform contract administration functions, or make payment prior to fulfilling their responsibilities.

(ii) The prompt payment regulations at 5 CFR 1315.10(c) do not require the Government to pay interest penalties if payment delays are due to disagreement between the Government and the Contractor over the payment amount or other issues involving contract compliance, or on amounts temporarily withheld or retained in accordance with the terms of the contract. The Government and the Contractor shall resolve claims involving disputes, and any interest that may be payable in accordance with the clause at FAR 52.233-1, Disputes.

(5) Discounts for prompt payment. The designated payment office will pay an interest penalty automatically, without request from the Contractor, if the Government takes a discount for prompt payment improperly. The Government will calculate the interest penalty in accordance with the prompt payment regulations at 5 CFR part 1315.

(6) Additional interest penalty. (i) The designated payment office will pay a penalty amount, calculated in accordance with the prompt payment regulations at 5 CFR part 1315 in addition to the interest penalty amount only if--

(A) The Government owes an interest penalty of $1 or more;

(B) The designated payment office does not pay the interest penalty within 10 days after the date the invoice amount is paid; and

(C) The Contractor makes a written demand to the designated payment office for additional penalty payment, in accordance with paragraph (a)(6)(ii) of this clause, postmarked not later than 40 days after the date the invoice amount is paid.

(ii)(A) The Contractor shall support written demands for additional penalty payments with the following data. The Government will not request any additional data. The Contractor shall--

(1) Specifically assert that late payment interest is due under a specific invoice, and request payment of all overdue late payment interest penalty and such additional penalty as may be required;

(2) Attach a copy of the invoice on which the unpaid late payment interest was due; and

(3) State that payment of the principal has been received, including the date of receipt.

(B) If there is no postmark or the postmark is illegible--

(1) The designated payment office that receives the demand will annotate it with the date of receipt provided the demand is received on or before the 40th day after payment was made; or

(2) If the designated payment office fails to make the required annotation, the Government will determine the demand's validity based on the date the Contractor has placed on the demand, provided such date is no later than the 40th day after payment was made.

(b) Contract financing payments. If this contract provides for contract financing, the Government will make contract financing payments in accordance with the applicable contract financing clause.

(c) Subcontract clause requirements. The Contractor shall include in each subcontract for property or services (including a material supplier) for the purpose of performing this contract the following:

(1) Prompt payment for subcontractors. A payment clause that obligates the Contractor to pay the subcontractor for satisfactory performance under its subcontract not later than 7 days from receipt of payment out of such amounts as are paid to the Contractor under this contract.

(2) Interest for subcontractors. An interest penalty clause that obligates the Contractor to pay to the subcontractor an interest penalty for each payment not made in accordance with the payment clause--

(i) For the period beginning on the day after the required payment date and ending on the date on which payment of the amount due is made; and

(ii) Computed at the rate of interest established by the Secretary of the Treasury, and published in the Federal Register, for interest payments under section 12 of the Contract Disputes Act of 1978 (41 U.S.C. 611) in effect at the time the Contractor accrues the obligation to pay an interest penalty.

(3) Subcontractor clause flowdown. A clause requiring each subcontractor to use:

(i) Include a payment clause and an interest penalty clause conforming to the standards set forth in paragraphs (c)(1) and (c)(2) of this clause in each of its subcontracts; and

(ii) Require each of its subcontractors to include such clauses in their subcontracts with each lower-tier subcontractor or supplier.

(d) Subcontract clause interpretation. The clauses required by paragraph (c) of this clause shall not be construed to impair the right of the Contractor or a subcontractor at any tier to negotiate, and to include in their subcontract, provisions that--

(1) Retainage permitted. Permit the Contractor or a subcontractor to retain (without cause) a specified percentage of each progress payment otherwise due to a subcontractor for satisfactory performance under the subcontract without incurring any obligation to pay a late payment interest penalty, in accordance with terms and conditions agreed to by the parties to the subcontract, giving such recognition as the parties deem appropriate to the ability of a subcontractor to furnish a performance bond and a payment bond;

(2) Withholding permitted. Permit the Contractor or subcontractor to make a determination that part or all of the subcontractor's request for payment may be withheld in accordance with the subcontract agreement; and

(3) Withholding requirements. Permit such withholding without incurring any obligation to pay a late payment penalty if--

(i) A notice conforming to the standards of paragraph (g) of this clause previously has been furnished to the subcontractor; and

(ii) The Contractor furnishes to the Contracting Officer a copy of any notice issued by a Contractor pursuant to paragraph (d)(3)(i) of this clause.

(e) Subcontractor withholding procedures. If a Contractor, after making a request for payment to the Government but before making a payment to a subcontractor for the subcontractor's performance covered by the payment request, discovers that all or a portion of the payment otherwise due such subcontractor is subject to withholding from the subcontractor in accordance with the subcontract agreement, then the Contractor shall--

(1) Subcontractor notice. Furnish to the subcontractor a notice conforming to the standards of paragraph (g) of this clause as soon as practicable upon ascertaining the cause giving rise to a withholding, but prior to the due date for subcontractor payment;

(2) Contracting Officer notice. Furnish to the Contracting Officer, as soon as practicable, a copy of the notice furnished to the subcontractor pursuant to paragraph (e)(1) of this clause;

(3) Subcontractor progress payment reduction. Reduce the subcontractor's progress payment by an amount not to exceed the amount specified in the notice of withholding furnished under paragraph (e)(1) of this clause;

(4) Subsequent subcontractor payment. Pay the subcontractor as soon as practicable after the correction of the identified subcontract performance deficiency, and--

(i) Make such payment within--

(A) Seven days after correction of the identified subcontract performance deficiency (unless the funds therefor must be recovered from the Government because of a reduction under paragraph
(e)(5)(i)) of this clause; or

(B) Seven days after the Contractor recovers such funds from the Government; or

(ii) Incur an obligation to pay a late payment interest penalty computed at the rate of interest established by the Secretary of the Treasury, and published in the Federal Register, for interest payments under section 12 of the Contracts Disputes Act of 1978 (41 U.S.C. 611) in effect at the time the Contractor accrues the obligation to pay an interest penalty;

(5) Notice to Contracting Officer. Notify the Contracting Officer upon--

(i) Reduction of the amount of any subsequent certified application for payment; or

(ii) Payment to the subcontractor of any withheld amounts of a progress payment, specifying--

(A) The amounts withheld under paragraph (e)(1) of this clause; and

(B) The dates that such withholding began and ended; and

(6) Interest to Government. Be obligated to pay to the Government an amount equal to interest on the withheld payments (computed in the manner provided in 31 U.S.C. 3903(c)(1)), from the 8th day after receipt of the withheld amounts from the Government until--

(i) The day the identified subcontractor performance deficiency is corrected; or

(ii) The date that any subsequent payment is reduced under paragraph (e)(5)(i) of this clause.

(f) Third-party deficiency reports--(1) Withholding from subcontractor. If a Contractor, after making payment to a first-tier subcontractor, receives from a supplier or subcontractor of the first-tier subcontractor (hereafter referred to as a “second-tier subcontractor”) a written notice in accordance with section 2 of the Act of August 24, 1935 (40 U.S.C. 270b, Miller Act), asserting a deficiency in such first-tier subcontractor's performance under the contract for which the Contractor may be ultimately liable, and the Contractor determines that all or a portion of future payments otherwise due such first-tier subcontractor is subject to withholding in accordance with the subcontract agreement, the Contractor may, without incurring an obligation to pay an interest penalty under paragraph (e)(6) of this clause--

(i) Furnish to the first-tier subcontractor a notice conforming to the standards of paragraph (g) of this clause as soon as practicable upon making such determination; and

(ii) Withhold from the first-tier subcontractor's next available progress payment or payments an amount not to exceed the amount specified in the notice of withholding furnished under paragraph (f)(1)(i) of this clause.

(2) Subsequent payment or interest charge. As soon as practicable, but not later than 7 days after receipt of satisfactory written notification that the identified subcontract performance deficiency has been corrected, the Contractor shall--

(i) Pay the amount withheld under paragraph (f)(1)(ii) of this clause to such first-tier subcontractor; or

(ii) Incur an obligation to pay a late payment interest penalty to such first-tier subcontractor computed at the rate of interest established by the Secretary of the Treasury, and published in the Federal Register, for interest payments under section 12 of the Contracts DisputesAct of 1978 (41 U.S.C. 611) in effect at the time the Contractor accrues the obligation to pay an interest penalty.

(g) Written notice of subcontractor withholding. The Contractor shall issue a written notice of any withholding to a subcontractor (with a copy furnished to the Contracting Officer), specifying--

(1) The amount to be withheld;

(2) The specific causes for the withholding under the terms of the subcontract; and

(3) The remedial actions to be taken by the subcontractor in order to receive payment of the amounts withheld.

(h) Subcontractor payment entitlement. The Contractor may not request payment from the Government of any amount withheld or retained in accordance with paragraph (d) of this clause until such time as the Contractor has determined and certified to the Contracting Officer that the subcontractor is entitled to the payment of such amount.

(i) Prime-subcontractor disputes. A dispute between the Contractor and subcontractor relating to the amount or entitlement of a subcontractor to a payment or a late payment interest penalty under a clause included in the subcontract pursuant to paragraph (c) of this clause does not constitute a dispute to which the Government is a party. The Government may not be interpleaded in any judicial or administrative proceeding involving such a dispute.

(j) Preservation of prime-subcontractor rights. Except as provided in paragraph (i) of this clause, this clause shall not limit or impair any contractual, administrative, or judicial remedies otherwise available to the Contractor or a

subcontractor in the event of a dispute involving late payment or nonpayment by the Contractor or deficient subcontract performance or nonperformance by a subcontractor.

(k) Non-recourse for prime contractor interest penalty. The Contractor's obligation to pay an interest penalty to a subcontractor pursuant to the clauses included in a subcontract under paragraph (c) of this clause shall not be construed to be an obligation of the Government for such interest penalty. A cost-reimbursement claim may not include any amount for reimbursement of such interest penalty.

(l) Overpayments. If the Contractor becomes aware of a duplicate payment or that the Government has otherwise overpaid on an invoice payment, the Contractor shall immediately notify the Contracting Officer and request instructions for disposition of the overpayment.

(End of clause)

52.232-33 PAYMENT BY ELECTRONIC FUNDS TRANSFER—CENTRAL CONTRACTOR REGISTRATION (MAY 1999)

(a) Method of payment. (1) All payments by the Government under this contract shall be made by electronic funds transfer (EFT), except as provided in paragraph (a)(2) of this clause. As used in this clause, the term “EFT” refers to the funds transfer and may also include the payment information transfer.

(2) In the event the Government is unable to release one or more payments by EFT, the Contractor agrees to either--

(i) Accept payment by check or some other mutually agreeable method of payment; or

(ii) Request the Government to extend the payment due date until such time as the Government can make payment by EFT (but see paragraph (d) of this clause).

(b) Contractor's EFT information. The Government shall make payment to the Contractor using the EFT information contained in the Central Contractor Registration (CCR) database. In the event that the EFT information changes, the Contractor shall be responsible for providing the updated information to the CCR database.

(c) Mechanisms for EFT payment. The Government may make payment by EFT through either the Automated Clearing House (ACH) network, subject to the rules of the National Automated Clearing House Association, or the Fedwire Transfer System. The rules governing Federal payments through the ACH are contained in 31 CFR part 210.

(d) Suspension of payment. If the Contractor's EFT information in the CCR database is incorrect, then the Government need not make payment to the Contractor under this contract until correct EFT information is entered into the CCR database; and any invoice or contract financing request shall be deemed not to be a proper invoice for the purpose of prompt payment under this contract. The prompt payment terms of the contract regarding notice of an improper invoice and delays in accrual of interest penalties apply.

(e) Contractor EFT arrangements. If the Contractor has identified multiple payment receiving points (i.e., more than one remittance address and/or EFT information set) in the CCR database, and the Contractor has not notified the Government of the payment receiving point applicable to this contract, the Government shall make payment to the first payment receiving point (EFT information set or remittance address as applicable) listed in the CCR database.

(f) Liability for uncompleted or erroneous transfers. (1) If an uncompleted or erroneous transfer occurs because the Government used the Contractor's EFT information incorrectly, the Government remains responsible for--

(i) Making a correct payment;

(ii) Paying any prompt payment penalty due; and

(iii) Recovering any erroneously directed funds.

(2) If an uncompleted or erroneous transfer occurs because the Contractor's EFT information was incorrect, or was revised within 30 days of Government release of the EFT payment transaction instruction to the Federal Reserve System, and--

(i) If the funds are no longer under the control of the payment office, the Government is deemed to have made payment and the Contractor is responsible for recovery of any erroneously directed funds; or

(ii) If the funds remain under the control of the payment office, the Government shall not make payment, and the provisions of paragraph (d) of this clause shall apply.

(g) EFT and prompt payment. A payment shall be deemed to have been made in a timely manner in accordance with the prompt payment terms of this contract if, in the EFT payment transaction instruction released to the Federal Reserve System, the date specified for settlement of the payment is on or before the prompt payment due date, provided the specified payment date is a valid date under the rules of the Federal Reserve System.

(h) EFT and assignment of claims. If the Contractor assigns the proceeds of this contract as provided for in the assignment of claims terms of this contract, the Contractor shall require as a condition of any such assignment, that the assignee shall register in the CCR database and shall be paid by EFT in accordance with the terms of this clause. In all respects, the requirements of this clause shall apply to the assignee as if it were the Contractor. EFT information that shows the ultimate recipient of the transfer to be other than the Contractor, in the absence of a proper assignment of claims acceptable to the Government, is incorrect EFT information within the meaning of paragraph (d) of this clause.

(i) Liability for change of EFT information by financial agent. The Government is not liable for errors resulting from changes to EFT information made by the Contractor's financial agent.

(j) Payment information. The payment or disbursing office shall forward to the Contractor available payment information that is suitable for transmission as of the date of release of the EFT instruction to the Federal Reserve System. The Government may request the Contractor to designate a desired format and method(s) for delivery of payment information from a list of formats and methods the payment office is capable of executing. However, the Government does not guarantee that any particular format or method of delivery is available at any particular payment office and retains the latitude to use the format and delivery method most convenient to the Government. If the Government makes payment by check in accordance with paragraph (a) of this clause, the Government shall mail the payment information to the remittance address contained in the CCR database.

(End of Clause)

52.233-1 DISPUTES. (JUL 2002)

(a) This contract is subject to the Contract Disputes Act of 1978, as amended (41 U.S.C. 601-613).

(b) Except as provided in the Act, all disputes arising under or relating to this contract shall be resolved under this clause.

(c) Claim, as used in this clause, means a written demand or written assertion by one of the contracting parties

seeking, as a matter of right, the payment of money in a sum certain, the adjustment or interpretation of contract terms, or other relief arising under or relating to this contract. However, a written demand or written assertion by the Contractor seeking the payment of money exceeding $100,000 is not a claim under the Act until certified. A voucher, invoice, or other routine request for payment that is not in dispute when submitted is not a claim under the Act. The submission may be converted to a claim under the Act, by complying with the submission and certification requirements of this clause, if it is disputed either as to liability or amount or is not acted upon in a reasonable time.

(d)(1) A claim by the Contractor shall be made in writing and, unless otherwise stated in this contract, submitted within 6 years after accrual of the claim to the Contracting Officer for a written decision. A claim by the Government against the Contractor shall be subject to a written decision by the Contracting Officer.

(2)(i) The contractors shall provide the certification specified in subparagraph (d)(2)(iii) of this clause when submitting any claim -

(A) Exceeding $100,000; or

(B) Regardless of the amount claimed, when using -

(1) Arbitration conducted pursuant to 5 U.S.C. 575-580; or

(2) Any other alternative means of dispute resolution (ADR) technique that the agency elects to handle in accordance with the Administrative Dispute Resolution Act (ADRA).

(ii) The certification requirement does not apply to issues in controversy that have not been submitted as all or part of a claim.

(iii) The certification shall state as follows: "I certify that the claim is made in good faith; that the supporting data are accurate and complete to the best of my knowledge and belief; that the amount requested accurately reflects the contract adjustment for which the Contractor believes the Government is liable; and that I am duly authorized to certify the claim on behalf of the Contractor.

(3) The certification may be executed by any person duly authorized to bind the Contractor with respect to the claim.

(e) For Contractor claims of $100,000 or less, the Contracting Officer must, if requested in writing by the Contractor, render a decision within 60 days of the request. For Contractor-certified claims over $100,000, the Contracting Officer must, within 60 days, decide the claim or notify the Contractor of the date by which the decision will be made.

(f) The Contracting Officer's decision shall be final unless the Contractor appeals or files a suit as provided in the Act.

(g) If the claim by the Contractor is submitted to the Contracting Officer or a claim by the Government is presented to the Contractor, the parties, by mutual consent, may agree to use alternative disput resolution (ADR). If the Contractor refuses an offer for ADR, the Contractor shall inform the Contracting Officer, in writing, of the Contractor's specific reasons for rejecting the request.

(h) The Government shall pay interest on the amount found due and unpaid from (1) the date the Contracting Officer receives the claim (certified, if required); or (2) the date that payment otherwise would be due, if that date is later, until the date of payment. With regard to claims having defective certifications, as defined in (FAR) 48 CFR 33.201, interest shall be paid from the date that the Contracting Officer initially receives the claim. Simple interest on claims shall be paid at the rate, fixed by the Secretary of the Treasury as provided in the Act, which is applicable to the period during which the Contracting Officer receives the claim and then at the rate applicable for each 6-month period as fixed by the Treasury Secretary during the pendency of the claim.

(i) The Contractor shall proceed diligently with performance of this contract, pending final resolution of any request for relief, claim, appeal, or action arising under the contract, and comply with any decision of the Contracting Officer.

(End of clause)

52.233-3 PROTEST AFTER AWARD (AUG. 1996)

(a) Upon receipt of a notice of protest (as defined in FAR 33.101) or a determination that a protest is likely (see FAR 33.102(d)), the Contracting Officer may, by written order to the Contractor, direct the Contractor to stop performance of the work called for by this contract. The order shall be specifically identified as a stop-work order issued under this clause. Upon receipt of the order, the Contractor shall immediately comply with its terms and take all reasonable steps to minimize the incurrence of costs allocable to the work covered by the order during the period of work stoppage. Upon receipt of the final decision in the protest, the Contracting Officer shall either--

(1) Cancel the stop-work order; or

(2) Terminate the work covered by the order as provided in the Default, or the Termination for Convenience of the Government, clause of this contract.

(b) If a stop-work order issued under this clause is canceled either before or after a final decision in the protest, the Contractor shall resume work. The Contracting Officer shall make an equitable adjustment in the delivery schedule or contract price, or both, and the contract shall be modified, in writing, accordingly, if--

(1) The stop-work order results in an increase in the time required for, or in the Contractor's cost properly allocable to, the performance of any part of this contract; and

(2) The Contractor asserts its right to an adjustment within 30 days after the end of the period of work stoppage; provided, that if the Contracting Officer decides the facts justify the action, the Contracting Officer may receive and act upon a proposal at any time before final payment under this contract.

(c) If a stop-work order is not canceled and the work covered by the order is terminated for the convenience of the Government, the Contracting Officer shall allow reasonable costs resulting from the stop-work order in arriving at the termination settlement.

(d) If a stop-work order is not canceled and the work covered by the order is terminated for default, the Contracting Officer shall allow, by equitable adjustment or otherwise, reasonable costs resulting from the stop-work order.

(e) The Government's rights to terminate this contract at any time are not affected by action taken under this clause.

(f) If, as the result of the Contractor's intentional or negligent misstatement, misrepresentation, or miscertification, a protest related to this contract is sustained, and the Government pays costs, as provided in FAR 33.102(b)(2) or 33.104(h)(1), the Government may require the Contractor to reimburse the Government the amount of such costs. In addition to any other remedy available, and pursuant to the requirements of Subpart 32.6, the Government may collect this debt by offsetting the amount against any payment due the Contractor under any contract between the Contractor and the Government.

(End of clause)

52.236-2 DIFFERING SITE CONDITIONS (APR 1984)

As prescribed in 36.502, insert the following clause in solicitations and contracts when a fixed-price construction contract or a fixed-price dismantling, demolition, or removal of improvements contract is contemplated and the contract amount is expected to exceed the small purchase limitation. The Contracting Officer may insert the clause in solicitations and contracts when a fixed-price construction or a fixed-price contract for dismantling, demolition, or removal of improvements is contemplated and the contract amount is expected to be within the small purchase limitation.

(a) The Contractor shall promptly, and before the conditions are disturbed, give a written notice to the Contracting Officer of

(1) subsurface or latent physical conditions at the site which differ materially from those indicated in this contract, or

(2) unknown physical conditions at the site, of an unusual nature, which differ materially from those ordinarily encountered and generally recognized as inhering in work of the character provided for in the contract.

(b) The Contracting Officer shall investigate the site conditions promptly after receiving the notice. If the conditions do materially so differ and cause an increase or decrease in the Contractor's cost of, or the time required for, performing any part of the work under this contract, whether or not changed as a result of the conditions, an equitable adjustment shall be made under this clause and the contract modified in writing accordingly.

(c) No request by the Contractor for an equitable adjustment to the contract under this clause shall be allowed, unless the Contractor has given the written notice required; provided, that the time prescribed in (a) above for giving written notice may be extended by the Contracting Officer.

(d) No request by the Contractor for an equitable adjustment to the contract for differing site conditions shall be allowed if made after final payment under this contract.

(End of clause)

52.236-3 SITE INVESTIGATION AND CONDITIONS AFFECTING THE WORK (APR 1984)

(a) The Contractor acknowledges that it has taken steps reasonably necessary to ascertain the nature and location of the work, and that it has investigated and satisfied itself as to the general and local conditions which can affect the work or its cost, including but not limited to

(1) conditions bearing upon transportation, disposal, handling, and storage of materials;

(2) the availability of labor, water, electric power, and roads;

(3) uncertainties of weather, river stages, tides, or similar physical conditions at the site;

(4) the conformation and conditions of the ground; and (5) the character of equipment and facilities needed preliminary to and during work performance. The Contractor also acknowledges that it has satisfied itself as to the character, quality, and quantity of surface and subsurface materials or obstacles to be encountered insofar as this information is reasonably ascertainable from an inspection of the site, including all exploratory work done by the Government, as well as from the drawings and specifications made a part of this contract. Any failure of the Contractor to take the actions described and acknowledged in this paragraph will not relieve the Contractor from responsibility for estimating properly the difficulty and cost of successfully performing the work, or for proceeding to successfully perform the work without additional expense to the Government.

(b) The Government assumes no responsibility for any conclusions or interpretations made by the Contractor based on the information made available by the Government. Nor does the Government assume responsibility for any understanding reached or representation made concerning conditions which can affect the work by any of its officers or agents before the execution of this contract, unless that understanding or representation is expressly stated in this contract.

(End of clause)

52.236-5 MATERIAL AND WORKMANSHIP (APR 1984)

(a) All equipment, material, and articles incorporated into the work covered by this contract shall be new and of the most suitable grade for the purpose intended, unless otherwise specifically provided in this contract. References in the specifications to equipment, material, articles, or patented processes by trade name, make, or catalog number, shall be regarded as establishing a standard of quality and shall not be construed as limiting competition. The Contractor may, at its option, use any equipment, material, article, or process that, in the judgment of the Contracting Officer, is equal to that named in the specifications, unless otherwise specifically provided in this contract.

(b) The Contractor shall obtain the Contracting Officer's approval of the machinery and mechanical and other equipment to be incorporated into the work. When requesting approval, the Contractor shall furnish to the Contracting Officer the name of the manufacturer, the model number, and other information concerning the performance, capacity, nature, and rating of the machinery and mechanical and other equipment. When required by this contract or by the Contracting Officer, the Contractor shall also obtain the Contracting Officer's approval of the material or articles which the Contractor contemplates incorporating into the work. When requesting approval, the Contractor shall provide full information concerning the material or articles. When directed to do so, the Contractor shall submit samples for approval at the Contractor's expense, with all shipping charges prepaid. Machinery, equipment, material, and articles that do not have the required approval shall be installed or used at the risk of subsequent rejection.

(c) All work under this contract shall be performed in a skillful and workmanlike manner. The Contracting Officer may require, in writing, that the Contractor remove from the work any employee the Contracting Officer deems incompetent, careless, or otherwise objectionable.

(End of clause)

52.236-6 SUPERINTENDENCE BY THE CONTRACTOR (APR 1984)

At all times during performance of this contract and until the work is completed and accepted, the Contractor shall directly superintend the work or assign and have on the worksite a competent superintendent who is satisfactory to the Contracting Officer and has authority to act for the Contractor.

(End of clause)

52.236-7 PERMITS AND RESPONSIBILITIES (NOV 1991)

The Contractor shall, without additional expense to the Government, be responsible for obtaining any necessary licenses and permits, and for complying with any Federal, State, and municipal laws, codes, and regulations applicable to the performance of the work. The Contractor shall also be responsible for all damages to persons or

property that occur as a result of the Contractor's fault or negligence. The Contractor shall also be responsible for all materials delivered and work performed until completion and acceptance of the entire work, except for any completed unit of work which may have been accepted under the contract.

(End of clause)

52.236-8 OTHER CONTRACTS (APR 1984)

The Government may undertake or award other contracts for additional work at or near the site of the work under this contract. The Contractor shall fully cooperate with the other contractors and with Government employees and shall carefully adapt scheduling and performing the work under this contract to accommodate the additional work, heeding any direction that may be provided by the Contracting Officer. The Contractor shall not commit or permit any act that will interfere with the performance of work by any other contractor or by Government employees.

(End of clause)

52.236-9 PROTECTION OF EXISTING VEGETATION, STRUCTURES, EQUIPMENT, UTILITIES, AND IMPROVEMENTS (APR 1984)

(a) The Contractor shall preserve and protect all structures, equipment, and vegetation (such as trees, shrubs, and grass) on or adjacent to the work site, which are not to be removed and which do not unreasonably interfere with the work required under this contract. The Contractor shall only remove trees when specifically authorized to do so, and shall avoid damaging vegetation that will remain in place. If any limbs or branches of trees are broken during contract performance, or by the careless operation of equipment, or by workmen, the Contractor shall trim those limbs or branches with a clean cut and paint the cut with a tree-pruning compound as directed by the Contracting Officer.

(b) The Contractor shall protect from damage all existing improvements and utilities

(1) at or near the work site, and

(2) on adjacent property of a third party, the locations of which are made known to or should be known by the Contractor. The Contractor shall repair any damage to those facilities, including those that are the property of a third party, resulting from failure to comply with the requirements of this contract or failure to exercise reasonable care in performing the work. If the Contractor fails or refuses to repair the damage promptly, the Contracting Officer may have the necessary work performed and charge the cost to the Contractor.

(End of clause)

52.236-10 OPERATIONS AND STORAGE AREAS (APR 1984)

(a) The Contractor shall confine all operations (including storage of materials) on Government premises to areas authorized or approved by the Contracting Officer. The Contractor shall hold and save the Government, its officers and agents, free and harmless from liability of any nature occasioned by the Contractor's performance.

(b) Temporary buildings (e.g., storage sheds, shops, offices) and utilities may be erected by the Contractor only with the approval of the Contracting Officer and shall be built with labor and materials furnished by the Contractor without expense to the Government. The temporary buildings and utilities shall remain the property of the Contractor and

shall be removed by the Contractor at its expense upon completion of the work. With the written consent of the Contracting Officer, the buildings and utilities may be abandoned and need not be removed.

(c) The Contractor shall, under regulations prescribed by the Contracting Officer, use only established roadways, or use temporary roadways constructed by the Contractor when and as authorized by the Contracting Officer. When materials are transported in prosecuting the work, vehicles shall not be loaded beyond the loading capacity recommended by the manufacturer of the vehicle or prescribed by any Federal, State, or local law or regulation. When it is necessary to cross curbs or sidewalks, the Contractor shall protect them from damage. The Contractor shall repair or pay for the repair of any damaged curbs, sidewalks, or roads.

(End of clause)

52.236-11 USE AND POSSESSION PRIOR TO COMPLETION (APR 1984)

(a) The Government shall have the right to take possession of or use any completed or partially completed part of the work. Before taking possession of or using any work, the Contracting Officer shall furnish the Contractor a list of items of work remaining to be performed or corrected on those portions of the work that the Government intends to take possession of or use. However, failure of the Contracting Officer to list any item of work shall not relieve the Contractor of responsibility for complying with the terms of the contract. The Government's possession or use shall not be deemed an acceptance of any work under the contract.

(b) While the Government has such possession or use, the Contractor shall be relieved of the responsibility for the loss of or damage to the work resulting from the Government's possession or use, notwithstanding the terms of the clause in this contract entitled "Permits and Responsibilities." If prior possession or use by the Government delays the progress of the work or causes additional expense to the Contractor, an equitable adjustment shall be made in the contract price or the time of completion, and the contract shall be modified in writing accordingly.

(End of clause)

52.236-12 CLEANING UP (APR 1984)

The Contractor shall at all times keep the work area, including storage areas, free from accumulations of waste materials. Before completing the work, the Contractor shall remove from the work and premises any rubbish, tools, scaffolding, equipment, and materials that are not the property of the Government. Upon completing the work, the Contractor shall leave the work area in a clean, neat, and orderly condition satisfactory to the Contracting Officer.

(End of clause)

52.236-13 ACCIDENT PREVENTION (NOV 1991) – ALTERNATE I (NOV 1991)

(a) The Contractor shall provide and maintain work environments and procedures which will

(1) safeguard the public and Government personnel, property, materials, supplies, and equipment exposed to Contractor operations and activities;

(2) avoid interruptions of Government operations and delays in project completion dates; and

(3) control costs in the performance of this contract.

(b) For these purposes on contracts for construction or dismantling, demolition, or removal of improvements, the Contractor shall-

(1) Provide appropriate safety barricades, signs, and signal lights;

(2) Comply with the standards issued by the Secretary of Labor at 29 CFR Part 1926 and 29 CFR Part 1910; and

(3) Ensure that any additional measures the Contracting Officer determines to be reasonably necessary for the purposes are taken.

(c) If this contract is for construction or dismantling, demolition or removal of improvements with any Department of Defense agency or component, the Contractor shall comply with all pertinent provisions of the latest version of U.S. Army Corps of Engineers Safety and Health Requirements Manual, EM 385-1-1, in effect on the date of the solicitation.

(d) Whenever the Contracting Officer becomes aware of any noncompliance with these requirements or any condition which poses a serious or imminent danger to the health or safety of the public or Government personnel, the Contracting Officer shall notify the Contractor orally, with written confirmation, and request immediate initiation of corrective action. This notice, when delivered to the Contractor or the Contractor's representative at the work site, shall be deemed sufficient notice of the noncompliance and that corrective action is required. After receiving the notice, the Contractor shall immediately take corrective action. If the Contractor fails or refuses to promptly take corrective action, the Contracting Officer may issue an order stopping all or part of the work until satisfactory corrective action has been taken. The Contractor shall not be entitled to any equitable adjustment of the contract price or extension of the performance schedule on any stop work order issued under this clause.

(e) The Contractor shall insert this clause, including this paragraph (e), with appropriate changes in the designation of the parties, in subcontracts.

(f) Before commencing the work, the Contractor shall-

(1) Submit a written proposed plan for implementing this clause. The plan shall include an analysis of the significant hazards to life, limb, and property inherent in contract work performance and a plan for controlling these hazards; and

(2) Meet with representatives of the Contracting Officer to discuss and develop a mutual understanding relative to administration of the overall safety program.

(End of clause)

52.236-15 SCHEDULES FOR CONSTRUCTION CONTRACTS (APR 1984)

(a) The Contractor shall, within five days after the work commences on the contract or another period of time determined by the Contracting Officer, prepare and submit to the Contracting Officer for approval three copies of a practicable schedule showing the order in which the Contractor proposes to perform the work, and the dates on which the Contractor contemplates starting and completing the several salient features of the work (including acquiring materials, plant, and equipment). The schedule shall be in the form of a progress chart of suitable scale to indicate appropriately the percentage of work scheduled for completion by any given date during the period. If the Contractor fails to submit a schedule within the time prescribed, the Contracting Officer may withhold approval of progress payments until the Contractor submits the required schedule.

(b) The Contractor shall enter the actual progress on the chart as directed by the Contracting Officer, and upon doing so shall immediately deliver three copies of the annotated schedule to the Contracting Officer. If, in the opinion of the Contracting Officer, the Contractor falls behind the approved schedule, the Contractor shall take steps necessary to improve its progress, including those that may be required by the Contracting Officer, without additional cost to the Government. In this circumstance, the Contracting Officer may require the Contractor to increase the number of shifts, overtime operations, days of work, and/or the amount of construction plant, and to submit for approval any supplementary schedule or schedules in chart form as the Contracting Officer deems necessary to demonstrate how the approved rate of progress will be regained.

(c) Failure of the Contractor to comply with the requirements of the Contracting Officer under this clause shall be grounds for a determination by the Contracting Officer that the Contractor is not prosecuting the work with sufficient diligence to ensure completion within the time specified in the contract. Upon making this determination, the Contracting Officer may terminate the Contractor's right to proceed with the work, or any separable part of it, in accordance with the default terms of this contract.

(End of clause)

52.236-17 LAYOUT OF WORK (APR 1984)

The Contractor shall lay out its work from Government established base lines and bench marks indicated on the drawings, and shall be responsible for all measurements in connection with the layout. The Contractor shall furnish, at its own expense, all stakes, templates, platforms, equipment, tools, materials, and labor required to lay out any part of the work. The Contractor shall be responsible for executing the work to the lines and grades that may be established or indicated by the Contracting Officer. The Contractor shall also be responsible for maintaining and preserving all stakes and other marks established by the Contracting Officer until authorized to remove them. If such marks are destroyed by the Contractor or through its negligence before their removal is authorized, the Contracting Officer may replace them and deduct the expense of the replacement from any amounts due or to become due to the Contractor.

(End of clause)

52.236-21 SPECIFICATIONS AND DRAWINGS FOR CONSTRUCTION (FEB 1997)

(a) The Contractor shall keep on the work site a copy of the drawings and specifications and shall at all times give the Contracting Officer access thereto. Anything mentioned in the specifications and not shown on the drawings, or shown on the drawings and not mentioned in the specifications, shall be of like effect as if shown or mentioned in both. In case of difference between drawings and specifications, the specifications shall govern. In case of discrepancy in the figures, in the drawings, or in the specifications, the matter shall be promptly submitted to the Contracting Officer, who shall promptly make a determination in writing. Any adjustment by the Contractor without such a determination shall be at its own risk and expense. The Contracting Officer shall furnish from time to time such detailed drawings and other information as considered necessary, unless otherwise provided.

(b) Wherever in the specifications or upon the drawings the words "directed", "required", "ordered", "designated", "prescribed", or words of like import are used, it shall be understood that the "direction", "requirement", "order", "designation", or "prescription", of the Contracting Officer is intended and similarly the words "approved", "acceptable", "satisfactory", or words of like import shall mean "approved by," or "acceptable to", or "satisfactory to" the Contracting Officer, unless otherwise expressly stated.

(c) Where "as shown," as indicated", "as detailed", or words of similar import are used, it shall be understood that

the reference is made to the drawings accompanying this contract unless stated otherwise. The word "provided" as used herein shall be understood to mean "provide complete in place," that is "furnished and installed".

(d) Shop drawings means drawings, submitted to the Government by the Contractor, subcontractor, or any lower tier subcontractor pursuant to a construction contract, showing in detail (1) the proposed fabrication and assembly of structural elements, and (2) the installation (i.e., fit, and attachment details) of materials or equipment. It includes drawings, diagrams, layouts, schematics, descriptive literature, illustrations, schedules, performance and test data, and similar materials furnished by the contractor to explain in detail specific portions of the work required by the contract. The Government may duplicate, use, and disclose in any manner and for any purpose shop drawings delivered under this contract.

(e) If this contract requires shop drawings, the Contractor shall coordinate all such drawings, and review them for accuracy, completeness, and compliance with contract requirements and shall indicate its approval thereon as evidence of such coordination and review. Shop drawings submitted to the Contracting Officer without evidence of the Contractor's approval may be returned for resubmission. The Contracting Officer will indicate an approval or disapproval of the shop drawings and if not approved as submitted shall indicate the Government's reasons therefor. Any work done before such approval shall be at the Contractor's risk. Approval by the Contracting Officer shall not relieve the Contractor from responsibility for any errors or omissions in such drawings, nor from responsibility for complying with the requirements of this contract, except with respect to variations described and approved in accordance with (f) below.

(f) If shop drawings show variations from the contract requirements, the Contractor shall describe such variations in writing, separate from the drawings, at the time of submission. If the Contracting Officer approves any such variation, the Contracting Officer shall issue an appropriate contract modification, except that, if the variation is minor or does not involve a change in price or in time of performance, a modification need not be issued.

(g) The Contractor shall submit to the Contracting Officer for approval four copies (unless otherwise indicated) of all shop drawings as called for under the various headings of these specifications. Three sets (unless otherwise indicated) of all shop drawings, will be retained by the Contracting Officer and one set will be returned to the Contractor.

(End of clause)

52.236-22 DESIGN WITHIN FUNDING LIMITATIONS (APR 1984)

(a) The Contractor shall accomplish the design services required under this contract so as to permit the award of a contract, using standard Federal Acquisition Regulation procedures for the construction of the facilities designed at a price that does not exceed the estimated construction contract price as set forth in paragraph (c) below. When bids or proposals for the construction contract are received that exceed the estimated price, the contractor shall perform such redesign and other services as are necessary to permit contract award within the funding limitation. These additional services shall be performed at no increase in the price of this contract. However, the Contractor shall not be required to perform such additional services at no cost to the Government if the unfavorable bids or proposals are the result of conditions beyond its reasonable control.

(b) The Contractor will promptly advise the Contracting Officer if it finds that the project being designed will exceed or is likely to exceed the funding limitations and it is unable to design a usable facility within these limitations. Upon receipt of such information, the Contracting Officer will review the Contractor's revised estimate of construction cost. The Government may, if it determines that the estimated construction contract price set forth in this contract is so low that award of a construction contract not in excess of such estimate is improbable, authorize a change in scope or materials as required to reduce the estimated construction cost to an amount within the estimated construction contract price set forth in paragraph (c) below, or the Government may adjust such estimated construction contract

price. When bids or proposals are not solicited or are unreasonably delayed, the Government shall prepare an estimate of constructing the design submitted and such estimate shall be used in lieu of bids or proposals to determine compliance with the funding limitation.

(c) The estimated construction contract price for the project described in this contract is $ will be provided in Phase II.

(End of clause)

52.236-24 WORK OVERSIGHT IN ARCHITECT-ENGINEER CONTRACTS (APR 1984)

The extent and character of the work to be done by the Contractor shall be subject to the general oversight, supervision, direction, control, and approval of the Contracting Officer.

(End of clause)

52.236-25 REQUIREMENTS FOR REGISTRATION OF DESIGNERS (APR 1984)

The design of architectural, structural, mechanical, electrical, civil, or other engineering features of the work shall be accomplished or reviewed and approved by architects or engineers registered to practice in the particular professional field involved in a State or possession of the United States, in Puerto Rico, or in the District of Columbia.

(End of clause)

52.236-26 PRECONSTRUCTION CONFERENCE (FEB 1995)

If the Contracting Officer decides to conduct a preconstruction conference, the successful offeror will be notified and will be required to attend. The Contracting Officer's notification will include specific details regarding the date, time, and location of the conference, any need for attendance by subcontractors, and information regarding the items to be discussed.

(End of clause)

52.239-4001 Year 2000 Compliance

The contractor shall ensure products provided under this contract, to include hardware, software, firmware, and middleware, whether acting alone or combined as a system, are Year 2000 compliant as defined as follows: Year 2000 compliant means with respect to information technology, that the information technology accurately processes date/time data (including, but not limited to, calculating, comparing, and sequencing) from, into, and between the twentieth and twenty-first centuries, and the years 1999 and 2000 and leap year calculations, to the extent that other information, used in combination with the information technology being acquired, properly exchanges date/time data with it.

52.239-4005 Year 2000 Compliance - Construction Contracts

a. In accordance with FAR 39.106, the contractor shall ensure that with respect to any design, construction, goods, or services under this contract as well as any subsequent task/delivery orders issued under this contract (if applicable), all information technology contained therein shall be Year 2000 compliant. Specifically:

The contractor shall:

(1) Perform, maintain, and provide an inventory of all major components to include structures, equipment, items, parts, and furnishings under this contract and each task/delivery order which may be affected by the Y2K compliance requirement.

(2) Indicate whether each component is currently Year 2000 compliant or requires an upgrade for compliance prior to government acceptance.

(End of Clause)

52.242-13 BANKRUPTCY (JUL 1995)

In the event the Contractor enters into proceedings relating to bankruptcy, whether voluntary or involuntary, the Contractor agrees to furnish, by certified mail or electronic commerce method authorized by the contract, written notification of the bankruptcy to the Contracting Officer responsible for administering the contract. This notification shall be furnished within five days of the initiation of the proceedings relating to bankruptcy filing. This notification shall include the date on which the bankruptcy petition was filed, the identity of the court in which the bankruptcy petition was filed, and a listing of Government contract numbers and contracting offices for all Government contracts against which final payment has not been made. This obligation remains in effect until final payment under this contract.

(End of clause)

52.242-14 SUSPENSION OF WORK (APR 1984)

(a) The Contracting Officer may order the Contractor, in writing, to suspend, delay, or interrupt all or any part of the work of this contract for the period of time that the Contracting Officer determines appropriate for the convenience of the Government.

(b) If the performance of all or any part of the work is, for an unreasonable period of time, suspended, delayed, or interrupted (1) by an act of the Contracting Officer in the administration of this contract, or (2) by the Contracting Officer's failure to act within the time specified in this contract (or within a reasonable time if not specified), an adjustment shall be made for any increase in the cost of performance of this contract (excluding profit) necessarily caused by the unreasonable suspension, delay, or interruption, and the contract modified in writing accordingly. However, no adjustment shall be made under this clause for any suspension, delay, or interruption to the extent that performance would have been so suspended, delayed, or interrupted by any other cause, including the fault or

negligence of the Contractor, or for which an equitable adjustment is provided for or excluded under any other term or condition of this contract. (c) A claim under this clause shall not be allowed (1) for any costs incurred more than 20 days before the Contractor shall have notified the Contracting Officer in writing of the act or failure to act involved (but this requirement shall not apply as to a claim resulting from a suspension order), and (2) unless the claim, in an amount stated, is asserted in writing as soon as practicable after the termination of the suspension, delay, or interruption, but not later than the date of final payment under the contract.

(End of clause)

52.243-1 CHANGES--FIXED-PRICE (AUG 1987) - ALTERNATE III (APR 1984)

(a) The Contracting Officer may at any time, by written order, and without notice to the sureties, if any, make changes within the general scope of this contract in the services to be performed.

(b) If any such change causes an increase or decrease in the cost of, or the time required for, performance of any part of the work under this contract, whether or not changed by the order, the Contracting Officer shall make an equitable adjustment in the contract price, the delivery schedule, or both, and shall modify the contract.

(c) The Contractor must assert its right to an adjustment under this clause within 30 days from the date of receipt of the written order. However, if the Contracting Officer decides that the facts justify it, the Contracting Officer may receive and act upon a proposal submitted before final payment of the contract.

(d) If the Contractor's proposal includes the cost of property made obsolete or excess by the change, the Contracting Officer shall have the right to prescribe the manner of the disposition of the property.

(e) Failure to agree to any adjustment shall be a dispute under the Disputes clause. However, nothing in this clause shall excuse the Contractor from proceeding with the contract as changed.

(f) No services for which an additional cost or fee will be charged by the Contractor shall be furnished without the prior written authorization of the Contracting Officer.

(End of clause)

52.243-4 CHANGES (AUG 1987)

(a) The Contracting Officer may, at any time, without notice to the sureties, if any, by written order designated or indicated to be a change order, make changes in the work within the general scope of the contract, including changes--

(1) In the specifications (including drawings and designs);

(2) In the method or manner of performance of the work;

(3) In the Government-furnished facilities, equipment, materials, services, or site; or

(4) Directing acceleration in the performance of the work.

(b) Any other written or oral order (which, as used in this paragraph (b), includes direction, instruction, interpretation, or determination) from the Contracting Officer that causes a change shall be treated as a change order under this

clause; provided, that the Contractor gives the Contracting Officer written notice stating

(1) the date, circumstances, and source of the order and

(2) that the Contractor regards the order as a change order.

(c) Except as provided in this clause, no order, statement, or conduct of the Contracting Officer shall be treated as a change under this clause or entitle the Contractor to an equitable adjustment.

(d) If any change under this clause causes an increase or decrease in the Contractor's cost of, or the time required for, the performance of any part of the work under this contract, whether or not changed by any such order, the Contracting Officer shall make an equitable adjustment and modify the contract in writing. However, except for an adjustment based on defective specifications, no adjustment for any change under paragraph (b) of this clause shall be made for any costs incurred more than 20 days before the Contractor gives written notice as required. In the case of defective specifications for which the Government is responsible, the equitable adjustment shall include any increased cost reasonably incurred by the Contractor in attempting to comply with the defective specifications.

(e) The Contractor must assert its right to an adjustment under this clause within 30 days after

(1) receipt of a written change order under paragraph (a) of this clause or (2) the furnishing of a written notice under paragraph (b) of this clause, by submitting to the Contracting Officer a written statement describing the general nature and amount of the proposal, unless this period is extended by the Government. The statement of proposal for adjustment may be included in the notice under paragraph (b) above.

(f) No proposal by the Contractor for an equitable adjustment shall be allowed if asserted after final payment under this contract.

(End of clause)

52.244-5 COMPETITION IN SUBCONTRACTING (DEC 1996)

(a) The Contractor shall select subcontractors (including suppliers) on a competitive basis to the maximum practical extent consistent with the objectives and requirements of the contract.

(b) If the Contractor is an approved mentor under the Department of Defense Pilot Mentor-Protege Program (Pub. L. 101–510, section 831 as amended), the Contractor may award subcontracts under this contract on a noncompetitive basis to its proteges.

(End of clause)

52.244-6 SUBCONTRACTS FOR COMMERCIAL ITEMS (MAY 2002)

(a) Definitions.

"Commercial item", has the meaning contained in the clause at 52.202-1, Definitions.

"Subcontract", includes a transfer of commercial items between divisions, subsidiaries, or affiliates of the Contractor or subcontractor at any tier.

(b) To the maximum extent practicable, the Contractor shall incorporate, and require its subcontractors at all tiers to incorporate, commercial items or nondevelopmental items as components of items to be supplied under this contract.

(c) (1) The Contractor shall insert the following clauses in subcontracts for commercial items:

(i) 52.219-8, Utilization of Small Business Concerns (OCT 2000) (15 U.S.C. 637(d)(2) and (3)), in all subcontracts that offer further subcontracting opportunities. If the subcontract (except subcontracts to small business concerns) exceeds $500,000 ($1,000,000 for construction of any public facility), the subcontractor must include 52.219-8 in lower tier subcontracts that offer subcontracting opportunities.

(ii) 52.222-26, Equal Opportunity (Apr 2002) (E.O. 11246).

(iii) 52.222-35, Equal Opportunity for Special Disabled Veterans, Veterans of the Vietnam Era and Other Eligible Veterans (DEC 2001) (38 U.S.C. 4212(a)).

(iv) 52.222-36, Affirmative Action for Workers with Disabilities (JUN 1998) (29 U.S.C. 793).

(v) 52.247-64, Preference for Privately Owned U.S.-Flag Commercial Vessels (JUN 2000) (46 U.S.C. Appx 1241) (flowdown not required for subcontracts awarded beginning May 1, 1996).

(2) While not required, the Contractor may flow down to subcontracts for commercial items a minimal number of additional clauses necessary to satisfy its contractual obligations.

(d) The Contractor shall include the terms of this clause, including this paragraph (d), in subcontracts awarded under this contract.

(End of clause)

52.249-2 TERMINATION FOR CONVENIENCE OF THE GOVERNMENT (FIXED-PRICE) (SEP 1996) - ALTERNATE I (SEP 1996)

(a) The Government may terminate performance of work under this contract in whole or, from time to time, in part if the Contracting Officer determines that a termination is in the Government's interest. The Contracting Officer shall terminate by delivering to the Contractor a Notice of Termination specifying the extent of termination and the effective date.

(b) After receipt of a Notice of Termination, and except as directed by the Contracting Officer, the Contractor shall immediately proceed with the following obligations, regardless of any delay in determining or adjusting any amounts due under this clause:

(1) Stop work as specified in the notice.

(2) Place no further subcontracts or orders (referred to as subcontracts in this clause) for materials, services, or facilities, except as necessary to complete the continued portion of the contract.

(3) Terminate all subcontracts to the extent they relate to the work terminated.

(4) Assign to the Government, as directed by the Contracting Officer, all right, title, and interest of the Contractor under the subcontracts terminated, in which case the Government shall have the right to settle or to pay any termination settlement proposal arising out of those terminations.

(5) With approval or ratification to the extent required by the Contracting Officer, settle all outstanding liabilities and termination settlement proposals arising from the termination of subcontracts; the approval or ratification will be final for purposes of this clause.

(6) As directed by the Contracting Officer, transfer title and deliver to the Government (i) the fabricated or unfabricated parts, work in process, completed work, supplies, and other material produced or acquired for the work terminated, and (ii) the completed or partially completed plans, drawings, information, and other property that, if the contract had been completed, would be required to be furnished to the Government.

(7) Complete performance of the work not terminated.

(8) Take any action that may be necessary, or that the Contracting Officer may direct, for the protection and preservation of the property related to this contract that is in the possession of the Contractor and in which the Government has or may acquire an interest.

(9) Use its best efforts to sell, as directed or authorized by the Contracting Officer, any property of the types referred to in subparagraph (b)(6) of this clause; provided, however, that the Contractor (i) is not required to extend credit to any purchaser and (ii) may acquire the property under the conditions prescribed by, and at prices approved by, the Contracting Officer. The proceeds of any transfer or disposition will be applied to reduce any payments to be made by the Government under this contract, credited to the price or cost of the work, or paid in any other manner directed by the Contracting Officer.

(c) The Contractor shall submit complete termination inventory schedules no later than 120 days from the effective date of termination, unless extended in writing by the Contracting Officer upon written request of the Contractor within this 120-day period.

(d) After expiration of the plant clearance period as defined in Subpart 45.6 of the Federal Acquisition Regulation, the Contractor may submit to the Contracting Officer a list, certified as to quantity and quality, of termination inventory not previously disposed of, excluding items authorized for disposition by the Contracting Officer. The Contractor may request the Government to remove those items or enter into an agreement for their storage. Within 15 days, the Government will accept title to those items and remove them or enter into a storage agreement. The Contracting Officer may verify the list upon removal of the items, or if stored, within 45 days from submission of the list, and shall correct the list, as necessary, before final settlement.

(e) After termination, the Contractor shall submit a final termination settlement proposal to the Contracting Officer in the form and with the certification prescribed by the Contracting Officer. The Contractor shall submit the proposal promptly, but no later than 1 year from the effective date of termination, unless extended in writing by the Contracting Officer upon written request of the Contractor within this 1-year period. However, if the Contracting Officer determines that the facts justify it, a termination settlement proposal may be received and acted on after 1 year or any extension. If the Contractor fails to submit the proposal within the time allowed, the Contracting Officer may determine, on the basis of information available, the amount, if any, due the Contractor because of the termination and shall pay the amount determined.

(f) Subject to paragraph (e) of this clause, the Contractor and the Contracting Officer may agree upon the whole or any part of the amount to be paid or remaining to be paid because of the termination. The amount may include a reasonable allowance for profit on work done. However, the agreed amount, whether under this paragraph (g) or paragraph (g) of this clause, exclusive of costs shown in subparagraph (g)(3) of this clause, may not exceed the total contract price as reduced by (1) the amount of payments previously made and (2) the contract price of work not terminated. The contract shall be modified, and the Contractor paid the agreed amount. Paragraph (g) of this clause shall not limit, restrict, or affect the amount that may be agreed upon to be paid under this paragraph.

(g) If the Contractor and Contracting Officer fail to agree on the whole amount to be paid the Contractor because of the termination of work, the Contracting Officer shall pay the Contractor the amounts determined as follows, but without duplication of any amounts agreed upon under paragraph (f) of this clause:

(1) For contract work performed before the effective date of termination, the total (without duplication of any items) of--

(i) The cost of this work;

(ii) The cost of settling and paying termination settlement proposals under terminated subcontracts that are properly chargeable to the terminated portion of the contract if not included in subdivision (g)(1)(i) of this clause; and

(iii) A sum, as profit on subdivision (g)(1)(i) of this clause, determined by the Contracting Officer under 49.202 of the Federal Acquisition Regulation, in effect on the date of this contract, to be fair and reasonable; however, if it appears that the Contractor would have sustained a loss on the entire contract had it been completed, the Contracting Officer shall allow no profit under this subdivision (iii) and shall reduce the settlement to reflect the indicated rate of loss.

(2) The reasonable costs of settlement of the work terminated, including--

(i) Accounting, legal, clerical, and other expenses reasonably necessary for the preparation of termination settlement proposals and supporting data;

(ii) The termination and settlement of subcontracts (excluding the amounts of such settlements); and

(iii) Storage, transportation, and other costs incurred, reasonably necessary for the preservation, protection, or disposition of the termination inventory.

(h) Except for normal spoilage, and except to the extent that the Government expressly assumed the risk of loss, the Contracting Officer shall exclude from the amounts payable to the Contractor under paragraph (g) of this clause, the fair value, as determined by the Contracting Officer, of property that is destroyed, lost, stolen, or damaged so as to become undeliverable to the Government or to a buyer.

(i) The cost principles and procedures of Part 31 of the Federal Acquisition Regulation, in effect on the date of this contract, shall govern all costs claimed, agreed to, or determined under this clause.

(j) The Contractor shall have the right of appeal, under the Disputes clause, from any determination made by the Contracting Officer under paragraph (e), (g), or (l) of this clause, except that if the Contractor failed to submit the termination settlement proposal or request for equitable adjustment within the time provided in paragraph (e) or (l), respectively, and failed to request a time extension, there is no right of appeal.

(k) In arriving at the amount due the Contractor under this clause, there shall be deducted--

(1) All unliquidated advance or other payments to the Contractor under the terminated portion of this contract;

(2) Any claim which the Government has against the Contractor under this contract; and

(3) The agreed price for, or the proceeds of sale of, materials, supplies, or other things acquired by the Contractor or sold under the provisions of this clause and not recovered by or credited to the Government.

(l) If the termination is partial, the Contractor may file a proposal with the Contracting Officer for an equitable adjustment of the price(s) of the continued portion of the contract. The Contracting Officer shall make any equitable adjustment agreed upon. Any proposal by the Contractor for an equitable adjustment under this clause shall be requested within 90 days from the effective date of termination unless extended in writing by the Contracting Officer.

(m)(1) The Government may, under the terms and conditions it prescribes, make partial payments and payments against costs incurred by the Contractor for the terminated portion of the contract, if the Contracting Officer believes the total of these payments will not exceed the amount to which the Contractor will be entitled.

(2) If the total payments exceed the amount finally determined to be due, the Contractor shall repay the excess to the Government upon demand, together with interest computed at the rate established by the Secretary of the Treasury under 50 U.S.C. App. 1215(b)(2). Interest shall be computed for the period from the date the excess payment is received by the Contractor to the date the excess is repaid. Interest shall not be charged on any excess payment due to a reduction in the Contractor's termination settlement proposal because of retention or other disposition of termination inventory until 10 days after the date of the retention or disposition, or a later date determined by the Contracting Officer because of the circumstances.

(n) Unless otherwise provided in this contract or by statute, the Contractor shall maintain all records and documents relating to the terminated portion of this contract for 3 years after final settlement. This includes all books and other evidence bearing on the Contractor's costs and expenses under this contract. The Contractor shall make these records and documents available to the Government, at the Contractor's office, at all reasonable times, without any direct charge. If approved by the Contracting Officer, photographs, microphotographs, or other authentic reproductions may be maintained instead of original records and documents.

(End of clause)

52.249-7 TERMINATION (FIXED-PRICE ARCHITECT-ENGINEER) (APR 1984)

(a) The Government may terminate this contract in whole or, from time to time, in part, for the Government's convenience or because of the failure of the Contractor to fulfill the contract obligations. The Contracting Officer shall terminate by delivering to the Contractor a Notice of Termination specifying the nature, extent, and effective date of the termination. Upon receipt of the notice, the Contractor shall (1) immediately discontinue all services affected (unless the notice directs otherwise), and (2) deliver to the Contracting Officer all data, drawings, specifications, reports, estimates, summaries, and other information and materials accumulated in performing this contract, whether completed or in process.

(b) If the termination is for the convenience of the Government, the Contracting Officer shall make an equitable adjustment in the contract price but shall allow no anticipated profit on unperformed services.

(c) If the termination is for failure of the Contractor to fulfill the contract obligations, the Government may complete the work by contract or otherwise and the Contractor shall be liable for any additional cost incurred by the Government.

(d) If, after termination for failure to fulfill contract obligations, it is determined that the Contractor had not failed, the rights and obligations of the parties shall be the same as if the termination had been issued for the convenience of the Government.

53 The rights and remedies of the Government provided in this clause are in addition to any other rights and remedies provided by law or under this contract.

(End of clause)

52.249-10 DEFAULT (FIXED-PRICE CONSTRUCTION) (APR 1984)

(a) If the Contractor refuses or fails to prosecute the work or any separable part, with the diligence that will insure its completion within the time specified in this contract including any extension, or fails to complete the work within this time, the Government may, by written notice to the Contractor, terminate the right to proceed with the work (or the separable part of the work) that has been delayed. In this event, the Government may take over the work and complete it by contract or otherwise, and may take possession of and use any materials, appliances, and plant on the work site necessary for completing the work. The Contractor and its sureties shall be liable for any damage to the Government resulting from the Contractor's refusal or failure to complete the work within the specified time, whether or not the Contractor's right to proceed with the work is terminated. This liability includes any increased costs incurred by the Government in completing the work.

(b) The Contractor's right to proceed shall not be terminated nor the Contractor charged with damages under this clause, if--

(1) The delay in completing the work arises from unforeseeable causes beyond the control and without the fault or negligence of the Contractor. Examples of such causes include

(i) acts of God or of the public enemy,

(ii) acts of the Government in either its sovereign or contractual capacity,

(iii) acts of another Contractor in the performance of a contract with the Government,

(iv) fires,

(v) floods,

(vi) epidemics,

(vii) quarantine restrictions,

(viii) strikes,

(ix) freight embargoes,

(x) unusually severe weather, or delays of subcontractors or suppliers at any tier arising from unforeseeable causes beyond the control and without the fault or negligence of both the Contractor and the subcontractors or suppliers; and

(2) The Contractor, within 10 days from the beginning of any delay (unless extended by the Contracting Officer), notifies the Contracting Officer in writing of the causes of delay. The Contracting Officer shall ascertain the facts and the extent of delay. If, in the judgment of the Contracting Officer, the findings of fact warrant such action, the time for completing the work shall be extended. The findings of the Contracting Officer shall be final and conclusive on the parties, but subject to appeal under the Disputes clause.

(c) If, after termination of the Contractor's right to proceed, it is determined that the Contractor was not in default, or that the delay was excusable, the rights and obligations of the parties will be the same as if the termination had been issued for the convenience of the Government.

The rights and remedies of the Government in this clause are in addition to any other rights and remedies provided by law or under this contract.

(End of clause)

52.253-1 COMPUTER GENERATED FORMS (JAN 1991)

(a) Any data required to be submitted on a Standard or Optional Form prescribed by the Federal Acquisition Regulation (FAR) may be submitted on a computer generated version of the form, provided there is no change to the name, content, or sequence of the data elements on the form, and provided the form carries the Standard or Optional Form number and edition date.

(b) Unless prohibited by agency regulations, any data required to be submitted on an agency unique form prescribed by an agency supplement to the FAR may be submitted on a computer generated version of the form provided there is no change to the name, content, or sequence of the data elements on the form and provided the form carries the agency form number and edition date.

(c) If the Contractor submits a computer generated version of a form that is different than the required form, then the rights and obligations of the parties will be determined based on the content of the required form.

(End of clause)

252.201-7000 CONTRACTING OFFICER'S REPRESENTATIVE (DEC 1991)

(a) "Definition. Contracting officer's representative" means an individual designated in accordance with subsection 201.602-2 of the Defense Federal Acquisition Regulation Supplement and authorized in writing by the contracting officer to perform specific technical or administrative functions.

(b) If the Contracting Officer designates a contracting officer's representative (COR), the Contractor will receive a copy of the written designation. It will specify the extent of the COR's authority to act on behalf of the contracting officer. The COR is not authorized to make any commitments or changes that will affect price, quality, quantity, delivery, or any other term or condition of the contract.

(End of clause)

252.203-7001 PROHIBITION ON PERSONS CONVICTED OF FRAUD OR OTHER DEFENSE-CONTRACT-RELATED FELONIES (MAR 1999)

(a) Definitions. As used in this clause—

(1) “Arising out of a contract with the DoD” means any act in connection with—

(i) Attempting to obtain;

(ii) Obtaining, or

(iii) Performing a contract or first-tier subcontract of any agency, department, or component of the Department of Defense (DoD).

(2) “Conviction of fraud or any other felony” means any conviction for fraud or a felony in violation of state or Federal criminal statutes, whether entered on a verdict or plea, including a plea of *nolo contendere*, for which sentence has been imposed.

(3) “Date of conviction” means the date judgment was entered against the individual.

(b) Any individual who is convicted after September 29, 1988, of fraud or any other felony arising out of a contract with the DoD is prohibited from serving--

(1) In a management or supervisory capacity on any DoD contract or first-tier subcontract;

(2) On the board of directors of any DoD contractor or first-tier subcontractor;

(3) As a consultant, agent, or representative for any DoD contractor or first-tier subcontractor; or

(4) In any other capacity with the authority to influence, advise, or control the decisions of any DoD contractor or subcontractor with regard to any DoD contract or first-tier subcontract.

(c) Unless waived, the prohibition in paragraph (b) of this clause applies for not less than 5 years from the date of conviction.

(d) 10 U.S.C. 2408 provides that a defense contractor or first-tier subcontractor shall be subject to a criminal penalty of not more than $500,000 if convicted of knowingly—

(1) Employing a person under a prohibition specified in paragraph (b) of this clause; or

(2) Allowing such a person to serve on the board of directors of the contractor or first-tier subcontractor.

(e) In addition to the criminal penalties contained in 10 U.S.C. 2408, the Government may consider other available remedies, such as—

(1) Suspension or debarment;

(2) Cancellation of the contract at no cost to the Government; or

(3) Termination of the contract for default.

(f) The Contractor may submit written requests for waiver of the prohibition in paragraph (b) of this clause to the Contracting Officer. Requests shall clearly identify—

(1) The person involved;

(2) The nature of the conviction and resultant sentence or punishment imposed;

(3) The reasons for the requested waiver; and

(4) An explanation of why a waiver is in the interest of national security.

(g) The Contractor agrees to include the substance of this clause, appropriately modified to reflect the identity and relationship of the parties, in all first-tier subcontracts exceeding the simplified acquisition threshold in Part 2 of the Federal Acquisition Regulation, except those for commercial items or components.

(h) Pursuant to 10 U.S.C. 2408(c), defense contractors and subcontractors may obtain information as to whether a particular person has been convicted of fraud or any other felony arising out of a contract with the DoD by contacting The Office of Justice Programs, The Denial of Federal Benefits Office, U.S. Department of Justice, telephone (202) 616-3507.

(End of clause)

252.203-7002 DISPLAY OF DOD HOTLINE POSTER (DEC 1991)

(a) The Contractor shall display prominently in common work areas within business segments performing work under Department of Defense (DoD) contracts, DoD Hotline Posters prepared by the DoD Office of the Inspector General.

(b) DoD Hotline Posters may be obtained from the DoD Inspector General, ATTN: Defense Hotline, 400 Army Navy Drive, Washington, DC 22202-2884.

(c) The Contractor need not comply with paragraph (a) of this clause if it has established a mechanism, such as a hotline, by which employees may report suspected instances of improper conduct, and instructions that encourage employees to make such reports.

(End of clause)

252.204-7003 CONTROL OF GOVERNMENT PERSONNEL WORK PRODUCT (APR 1992)

The Contractor's procedures for protecting against unauthorized disclosure of information shall not require Department of Defense employees or members of the Armed Forces to relinquish control of their work products, whether classified or not, to the contractor.

(End of clause)

252.204-7004 REQUIRED CENTRAL CONTRACTOR REGISTRATION (NOV 2001)

(a) Definitions.

As used in this clause--

(1) Central Contractor Registration (CCR) database means the primary DoD repository for contractor information required for the conduct of business with DoD.

(2) Data Universal Numbering System (DUNS) number means the 9-digit number assigned by Dun and Bradstreet Information Services to identify unique business entities.

(3) Data Universal Numbering System +4 (DUNS+4) number means the DUNS number assigned by Dun and Bradstreet plus a 4-digit suffix that may be assigned by a parent (controlling) business concern. This 4-digit suffix may be assigned at the discretion of the parent business concern for such purposes as identifying subunits or affiliates of the parent business concern.

(4) Registered in the CCR database means that all mandatory information, including the DUNS number or the DUNS+4 number, if applicable, and the corresponding Commercial and Government Entity (CAGE) code, is in the CCR database; the DUNS number and the CAGE code have been validated; and all edits have been successfully completed.

(b)(1) By submission of an offer, the offeror acknowledges the requirement that a prospective awardee must be registered in the CCR database prior to award, during performance, and through final payment of any contract resulting from this solicitation, except for awards to foreign vendors for work to be performed outside the United States.

(2) The offeror shall provide its DUNS or, if applicable, its DUNS+4 number with its offer, which will be used by the Contracting Officer to verify that the offeror is registered in the CCR database.

(3) Lack of registration in the CCR database will make an offeror ineligible for award.

(4) DoD has established a goal of registering an applicant in the CCR database within 48 hours after receipt of a complete and accurate application via the Internet. However, registration of an applicant submitting an application through a method other than the Internet may take up to 30 days. Therefore, offerors that are not registered should consider applying for registration immediately upon receipt of this solicitation.

(c) The Contractor is responsible for the accuracy and completeness of the data within the CCR, and for any liability resulting from the Government's reliance on inaccurate or incomplete data. To remain registered in the CCR database after the initial registration, the Contractor is required to confirm on an annual basis that its information in the CCR database is accurate and complete.

(d) Offerors and contractors may obtain information on registration and annual confirmation requirements by calling 1-888-227-2423, or via the Internet at http://www.ccr.gov.

(End of clause)

252.205-7000 PROVISION OF INFORMATION TO COOPERATIVE AGREEMENT HOLDERS (DEC 1991)

(a) Definition.

"Cooperative agreement holder" means a State or local government; a private, nonprofit organization; a tribal organization (as defined in section 4(c) of the Indian Self-Determination and Education Assistance Act (Pub. L. 93-268; 25 U.S.C. 450 (c))); or an economic enterprise (as defined in section 3(e) of the Indian Financing Act of 1974 (Pub. L. 93-362; 25 U.S.C. 1452(e))) whether such economic enterprise is organized for profit or nonprofit purposes; which has an agreement with the Defense Logistics Agency to furnish procurement technical assistance to business entities.

(b) The Contractor shall provide cooperative agreement holders, upon their request, with a list of those appropriate employees or offices responsible for entering into subcontracts under defense contracts. The list shall include the business address, telephone number, and area of responsibility of each employee or office.

(c) The Contractor need not provide the listing to a particular cooperative agreement holder more frequently than once a year.

(End of clause)

252.209-7000 ACQUISITION FROM SUBCONTRACTORS SUBJECT TO ONSITE INSPECTION UNDER THE INTERMEDIATE-RANGE NUCLEAR FORCES (INF) TREATY (NOV 1995)

(a) The Contractor shall not deny consideration for a subcontract award under this contract to a potential subcontractor subject to on-site inspection under the INF Treaty, or a similar treaty, solely or in part because of the actual or potential presence of Soviet inspectors at the subcontractor's facility, unless the decision is approved by the Contracting Officer.

(b) The Contractor shall incorporate this clause, including this paragraph (b), in all solicitations and contracts exceeding the simplified acquisition threshold in part 13 of the Federal Acquisition Regulation, except those for commercial items.

(End of clause)

252.209-7004 SUBCONTRACTING WITH FIRMS THAT ARE OWNED OR CONTROLLED BY THE GOVERNMENT OF A TERRORIST COUNTRY (MAR 1998)

(a) Unless the Government determines that there is a compelling reason to do so, the Contractor shall not enter into any subcontract in excess of $25,000 with a firm, or subsidiary of a firm, that is identified, on the List of Parties Excluded from Federal Procurement and Nonprocurement Programs, as being ineligible for the award of Defense contracts or subcontracts because it is owned or controlled by the government of a terrorist country.

(b) A corporate officer or a designee of the Contractor shall notify the Contracting Officer, in writing, before entering into a subcontract with a party that is identified, on the List of Parties Excluded from Federal Procurement and Nonprocurement Programs, as being ineligible for the award of Defense contracts or subcontracts because it is owned or controlled by the government of a terrorist country. The notice must include the name of the proposed subcontractor notwithstanding its inclusion on the List of Parties Excluded From Federal Procurement and Nonprocurement Programs.

(End of clause)

252.215-7000 PRICING ADJUSTMENTS (DEC 1991)

The term "pricing adjustment," as used in paragraph (a) of the clauses entitled "Price Reduction for Defective Cost or Pricing Data - Modifications," "Subcontractor Cost or Pricing Data," and "Subcontractor Cost or Pricing Data - Modifications," means the aggregate increases and/or decreases in cost plus applicable profits.

(End of clause)

252.219-7003 SMALL, SMALL DISADVANTAGED AND WOMEN-OWNED SMALL BUSINESS SUBCONTRACTING PLAN (DOD CONTRACTS) (APR. 1996)

This clause supplements the Federal Acquisition Regulation 52.219-9, Small, Small Disadvantaged and Women-Owned Small Business Subcontracting Plan, clause of this contract.

(a) *Definitions. Historically black colleges and universities,* as used in this clause, means institutions determined by the Secretary of Education to meet the requirements of 34 CFR 608.2. The term also means any nonprofit research institution that was an integral part of such a college or university before November 14, 1986.

Minority institutions, as used in this clause, means institutions meeting the requirements of section 1046(3) of the Higher Education Act of 1965 (20 U.S.C. 1135d-5(3)). The term also includes Hispanic-serving institutions as defined in section 316(b)(1) of such Act (20 U.S.C. 1059c(b)(1)).

(b) Except for company or division-wide commercial items subcontracting plans, the term *small disadvantaged business,* when used in the FAR 52.219-9 clause, includes historically black colleges and universities and minority institutions, in addition to small disadvantaged business concerns.

(c) Work under the contract or its subcontracts shall be credited toward meeting the small disadvantaged business concern goal required by paragraph (d) of the FAR 52.219-9 clause when:

(1) It is performed on Indian lands or in joint venture with an Indian tribe or a tribally-owned corporation, and

(2) It meets the requirements of 10 U.S.C. 2323a.

(d) Subcontracts awarded to workshops approved by the Committee for Purchase from People Who are Blind or Severely Disabled (41 U.S.C. 46-48), may be counted toward the Contractor's small business subcontracting goal.

(e) A mentor firm, under the Pilot Mentor-Protege Program established under Section 831 of Pub. L. 101-510, as amended, may count toward its small disadvantaged business goal, subcontracts awarded--

(f) The master plan approval referred to in paragraph (f) of the FAR 52.219-9 clause is approval by the Contractor's cognizant contract administration activity.

(g) In those subcontracting plans which specifically identify small, small disadvantaged, and women-owned small businesses, the Contractor shall notify the Administrative Contracting Officer of any substitutions of firms that are not small, small disadvantaged, or women-owned small businesses for the firms listed in the subcontracting plan. Notifications shall be in writing and shall occur within a reasonable period of time after award of the subcontract. Contractor-specified formats shall be acceptable.

(End of clause)

252.223-7001 HAZARD WARNING LABELS (DEC 1991)

(a) "Hazardous material," as used in this clause, is defined in the Hazardous Material Identification and Material Safety Data clause of this contract.

(b) The Contractor shall label the item package (unit container) of any hazardous material to be delivered under this contract in accordance with the Hazard Communication Standard (29 CFR 1910.1200 et seq). The Standard requires that the hazard warning label conform to the requirements of the standard unless the material is otherwise subject to the labeling requirements of one of the following statutes:

(1) Federal Insecticide, Fungicide and Rodenticide Act;

(2) Federal Food, Drug and Cosmetics Act;

(3) Consumer Product Safety Act;

(4) Federal Hazardous Substances Act; or

(5) Federal Alcohol Administration Act.

(c) The Offeror shall list which hazardous material listed in the Hazardous Material Identification and Material Safety Data clause of this contract will be labeled in accordance with one of the Acts in paragraphs (b)(1) through (5) of this clause instead of the Hazard Communication Standard. Any hazardous material not listed will be interpreted to mean that a label is required in accordance with the Hazard Communication Standard.

MATERIAL (If None, Insert "None.")	ACT
_____	_____
_____	_____

(d) The apparently successful Offeror agrees to submit, before award, a copy of the hazard warning label for all hazardous materials not listed in paragraph (c) of this clause. The Offeror shall submit the label with the Material Safety Data Sheet being furnished under the Hazardous Material Identification and Material Safety Data clause of this contract.

(e) The Contractor shall also comply with MIL-STD-129, Marking for Shipment and Storage (including revisions adopted during the term of this contract).

(End of clause)

252.223-7004 DRUG-FREE WORK FORCE (SEP 1988)

(a) Definitions.

(1) "Employee in a sensitive position," as used in this clause, means an employee who has been granted access to classified information; or employees in other positions that the Contractor determines involve national security; health or safety, or functions other than the foregoing requiring a high degree of trust and confidence.

(2) "Illegal drugs," as used in this clause, means controlled substances included in Schedules I and II, as defined by section 802(6) of title 21 of the United States Code, the possession of which is unlawful under chapter 13 of that Title. The term "illegal drugs" does not mean the use of a controlled substance pursuant to a valid prescription or other uses authorized by law.

(b) The Contractor agrees to institute and maintain a program for achieving the objective of a drug-free work force. While this clause defines criteria for such a program, contractors are encouraged to implement alternative approaches comparable to the criteria in paragraph (c) that are designed to achieve the objectives of this clause.

(c) Contractor programs shall include the following, or appropriate alternatives:

(1) Employee assistance programs emphasizing high level direction, education, counseling, rehabilitation, and coordination with available community resources;

(2) Supervisory training to assist in identifying and addressing illegal drug use by Contractor employees;

(3) Provision for self-referrals as well as supervisory referrals to treatment with maximum respect for individual confidentiality consistent with safety and security issues;

(4) Provision for identifying illegal drug users, including testing on a controlled and carefully monitored basis. Employee drug testing programs shall be established taking account of the following:

(i) The Contractor shall establish a program that provides for testing for the use of illegal drugs by employees in sensitive positions. The extent of and criteria for such testing shall be determined by the Contractor based on

considerations that include the nature of the work being performed under the contract, the employee's duties, and efficient use of Contractor resources, and the risks to health, safety, or national security that could result from the failure of an employee adequately to discharge his or her position.

(ii) In addition, the Contractor may establish a program for employee drug testing--

(A) When there is a reasonable suspicion that an employee uses illegal drugs; or

(B) When an employees has been involved in an accident or unsafe practice;

(C) As part of or as a follow-up to counseling or rehabilitation for illegal drug use;

(D) As part of a voluntary employee drug testing program.

(iii) The Contractor may establish a program to test applicants for employment for illegal drug use.

(iv) For the purpose of administering this clause, testing for illegal drugs may be limited to those substances for which testing is prescribed by section 2..1 of subpart B of the "Mandatory Guidelines for Federal Workplace Drug Testing Programs" (53 FR 11980 (April 11, 1988), issued by the Department of Health and Human Services.

(d) Contractors shall adopt appropriate personnel procedures to deal with employees who are found to be using drugs illegally. Contractors shall not allow any employee to remain on duty or perform in a sensitive position who is found to use illegal drugs until such times as the Contractor, in accordance with procedures established by the Contractor, determines that the employee may perform in such a position.

(e) The provisions of this clause pertaining to drug testing program shall not apply to the extent that are inconsistent with state or local law, or with an existing collective bargaining agreement; provided that with respect to the latter, the Contractor agrees those issues that are in conflict will be a subject of negotiation at the next collective bargaining session.

(End of clause)

252.223-7006 PROHIBITION ON STORAGE AND DISPOSAL OF TOXIC AND HAZARDOUS MATERIALS (APR 1993)

(a) "Definitions".

As used in this clause --

(1) "Storage" means a non-transitory, semi-permanent or permanent holding, placement, or leaving of material. It does not include a temporary accumulation of a limited quantity of a material used in or a waste generated or resulting from authorized activities, such as servicing, maintenance, or repair of Department of Defense (DoD) items, equipment, or facilities.

(2) "Toxic or hazardous materials" means:

(i) Materials referred to in section 101(14) of the Comprehensive Environmental Response, Compensation, and Liability Act (CERCLA) of 1980 (42 U.S.C. 9601(14)) and materials designated under section 102 of CERCLA (42 U.S.C. 9602) (40 CFR part 302);

(ii) Materials that are of an explosive, flammable, or pyrotechnic nature; or

(iii) Materials otherwise identified by the Secretary of Defense as specified in DoD regulations.

(b) In accordance with 10 U.S.C. 2692, the Contractor is prohibited from storing or disposing of non-DoD-owned toxic or hazardous materials on a DoD installation, except to the extent authorized by a statutory exception to 10 U.S.C. 2692 or as authorized by the Secretary of Defense or his designee.

(End of clause)

252.225-7012 PREFERENCE FOR CERTAIN DOMESTIC COMMODITIES (APR 2002)

(a) Definitions. As used in this clause--

(1) Component means any item supplied to the Government as part of an end product or of another component.

(2) End product means supplies delivered under a line item of this contract.

(b) The Contractor shall deliver under this contract only such of the following items, either as end products or components, that have been grown, reprocessed, reused, or produced in the United States, its possessions, or Puerto Rico:

(1) Food.

(2) Clothing.

(3) Tents, tarpaulins, or covers.

(4) Cotton and other natural fiber products.

(5) Woven silk or woven silk blends.

(6) Spun silk yarn for cartridge cloth.

(7) Synthetic fabric, and coated synthetic fabric, including all textile fibers and yarns that are for use in such fabrics.

(8) Canvas products.

(9) Wool (whether in the form of fiber or yarn or contained in fabrics, materials, or manufactured articles).

(10) Any item of individual equipment (Federal Supply Class 8465) manufactured from or containing fibers, yarns, fabrics, or materials listed in this paragraph (b).

(c) This clause does not apply--

(1) To items listed in section 25.104(a) of the Federal Acquisition Regulation (FAR), or other items for which the Government has determined that a satisfactory quality and sufficient quantity cannot be acquired as and when needed at U.S. market prices;

(2) To end products incidentally incorporating cotton, other natural fibers, or wool, for which the estimated value of the cotton, other natural fibers, or wool--

(i) Is not more than 10 percent of the total price of the end product; and (ii) Does not exceed the simplified acquisition threshold in FAR part 2;

(3) To foods that have been manufactured or processed in the United States, its possessions, or Puerto Rico, regardless of where the foods (and any component if applicable) were grown or produced;

(4) To chemical warfare protective clothing produced in the countries listed in subsection 225.872-1 of the Defense FAR Supplement; or

(5) To fibers and yarns that are for use in synthetic fabric or coated synthetic fabric (but does apply to the synthetic or coated synthetic fabric itself), if--

(i) The fabric is to be used as a component of an end product that is not a textile product. Examples of textile products, made in whole or in part of fabric, include--

(A) Draperies, floor coverings, furnishings, and bedding (Federal Supply Group 72, Household and Commercial Furnishings and Appliances);

(B) Items made in whole or in part of fabric in Federal Supply Group 83, Textile/leather/furs/apparel/findings/ tents/flags, or Federal Supply Group 84, Clothing, Individual Equipment and Insignia;

(C) Upholstered seats (whether for household, office, or other use); and

(D) Parachutes (Federal Supply Class 1670); or

(ii) The fibers and yarns are para-aramid fibers and yarns manufactured in the Netherlands.

(End of clause)

252.225-7031 SECONDARY ARAB BOYCOTT OF ISRAEL (JUN 1992)

(a) Definitions. As used in this clause--

(1) "Foreign person" means any person other than a United States person as defined in Section 16(2) of the Export Administration Act of 1979 (50 U.S.C. App. Sec 2415).

(2) "United States person" is defined in Section 16(2) of the Export Administration Act of 1979 and means any United States resident or national (other than an individual resident outside the United States and employed by other than a United States person), any domestic concern (including any permanent domestic establishment of any foreign concern), and any foreign subsidiary or affiliate (including any permanent foreign establishment) of any domestic concern which is controlled in fact by such domestic concerns, as determined under regulations of the President.

(b) Certification. By submitting this offer, the Offeror, if a foreign person, company or entity, certifies that it--

(1) Does not comply with the Secondary Arab Boycott of Israel; and

(2) Is not taking or knowingly agreeing to take any action, with respect to the Secondary Boycott of Israel by Arab countries, which 50 U.S.C. App. Sec 2407(a) prohibits a United States person from taking.

(End of clause)

252.226-7001 UTILIZATION OF INDIAN ORGANIZATIONS AND INDIAN-OWNED ECONOMIC ENTERPRISES-DOD CONTRACTS (SEP 2001)

(a) Definitions. As used in this clause--

“Indian” means any person who is a member of any Indian tribe, band, group, pueblo, or community that is recognized by the Federal Government as eligible for services from the Bureau of Indian Affairs (BIA) in accordance with 25 U.S.C. 1452(c) and any “Native” as defined in the Alaska Native Claims Settlement Act (43 U.S.C. 1601).

“Indian organization” means the governing body of any Indian tribe or entity established or recognized by the governing body of an Indian tribe for the purposes of 25 U.S.C. Chapter 17.

“Indian-owned economic enterprise” means any Indian-owned (as determined by the Secretary of the Interior) commercial, industrial, or business activity established or organized for the purpose of profit, provided that Indian ownership constitutes not less than 51 percent of the enterprise.

“Indian tribe” means any Indian tribe, band, group, pueblo, or community, including native villages and native groups (including corporations organized by Kenai, Juneau, Sitka, and Kodiak) as defined in the Alaska Native Claims Settlement Act, that is recognized by the Federal Government as eligible for services from BIA in accordance with 25 U.S.C. 1452 (c).

“Interested party” means a contractor or an actual or prospective offeror whose direct economic interest would be affected by the award of a subcontract or by the failure to award a subcontract.

(b) The Contract shall use its best efforts to give Indian organizations and Indian-owned economic enterprises the maximum practicable opportunity to participate in the subcontracts it awards, to the fullest extent consistent with efficient performance of the contract.

(c) The Contracting Officer and the Contractor, acting in good faith, may rely on the representation of an Indian organization or Indian-owned economic enterprise as to its eligibility, unless and interested party challenges its status or the Contracting Officer has independent reason to question that status.

(d) In the event of a challenge to the representation of a subcontractor, the Contracting Officer will refer the matter to the U.S. Department of the Interior, Bureau of Indian Affairs, Attn: Chief, Division of Contracting and Grants Administration, 1849 C Street NW, MS-2626-MIB, Washington, DC 20240-4000. The BIA will determine the eligibility and will notify the Contracting Officer. No incentive payment will be made--

(1) Within 59 working days of subcontract award;

(2) While a challenge is pending; or

(3) If a subcontractor is determined to be an ineligible participant.

(e)(1) The Contractor, on its own behalf or on behalf of a subcontractor at any tier, may request an adjustment under the Indian Incentive Program to the following:

(i) The estimated cost of cost-type contract.

(ii) The target cost of a cost-plus-incentive-fee contract.

(iii) The target cost and ceiling price of a fixed-price incentive contract.

(iv) The price of a firm-fixed-price contract.

(2) The amount of the adjustment that may be made to the contract is 5 percent of the estimated cost, target cost, or firm-fixed price included in the subcontract initially awarded to the Indian organization or Indian-owned economic enterprise.

(3) The Contractor has the burden of proving the amount claimed and must assert its request for an adjustment prior to completion of contract performance.

(4) The Contracting Officer, subject to the terms and conditions of the contract and the availability of funds, will authorize an incentive payment of 5 percent of the amount paid to the subcontractor.

(5) If the Contractor requests and receives an adjustment on behalf of a subcontractor, the Contractor is obligated to pay the subcontractor the adjustment.

(f) The Contractor shall insert the substance of this clause, including this paragraph (f), in all subcontracts that--

(1) Are for other than commercial items; and

(2) Are expected to exceed the simplified acquisition threshold in Part 2 of the Federal Acquisition Regulation.

(End of clause)

252.227-7022 GOVERNMENT RIGHTS (UNLIMITED) (MAR 1979)

The Government shall have unlimited rights, in all drawings, designs, specifications, notes and other works developed in the performance of this contract, including the right to use same on any other Government design or construction without additional compensation to the Contractor. The Contractor hereby grants to the Government a paid-up license throughout the world to all such works to which he may assert or establish any claim under design patent or copyright laws. The Contractor for a period of three (3) years after completion of the project agrees to furnish the original or copies of all such works on the request of the Contracting Officer.

(End of clause)

252.227-7033 RIGHTS IN SHOP DRAWINGS (APR 1966)

(a) Shop drawings for construction means drawings, submitted to the Government by the Construction Contractor, subcontractor or any lower-tier subcontractor pursuant to a construction contract, showing in detail (i) the proposed fabrication and assembly of structural elements and (ii) the installation (i.e., form, fit, and attachment details) of materials or equipment. The Government may duplicate, use, and disclose in any manner and for any purpose shop drawings delivered under this contract.

(b) This clause, including this paragraph (b), shall be included in all subcontracts hereunder at any tier.

252.231-7000 SUPPLEMENTAL COST PRINCIPLES (DEC 1991)

When the allowability of costs under this contract is determined in accordance with part 31 of the Federal Acquisition Regulation (FAR), allowability shall also be determined in accordance with part 231 of the Defense FAR Supplement, in effect on the date of this contract.

(End of clause)

252.236-7000 MODIFICATION PROPOSALS - PRICE BREAKDOWN. (DEC 1991)

(a) The Contractor shall furnish a price breakdown, itemized as required and within the time specified by the Contracting Officer, with any proposal for a contract modification.

(b) The price breakdown --

(1) Must include sufficient detail to permit an analysis of profit, and of all costs for --

(i) Material;

(ii) Labor;

(iii) Equipment;

(iv) Subcontracts; and

(v) Overhead; and

(2) Must cover all work involved in the modification, whether the work was deleted, added, or changed.

(c) The Contractor shall provide similar price breakdowns to support any amounts claimed for subcontracts.

(d) The Contractor's proposal shall include a justification for any time extension proposed.

252.236-7005 AIRFIELD SAFETY PRECAUTIONS. (DEC 1991)

(a) Definitions. As used in this clause --

(1) "Landing areas means" --

(i) The primary surfaces, comprising the surface of the runway, runway shoulders, and lateral safety zones. The length of each primary surface is the same as the runway length. The width of each primary surface is 2,000 feet (1,000 feet on each side of the runway centerline);

(ii) The "clear zone" beyond the ends of each runway, i.e., the extension of the primary surface for a distance of 1,000 feet beyond each end of each runway;

(iii) All taxiways, plus the lateral clearance zones along each side for the length of the taxiways (the outer edge of each lateral clearance zone is laterally 250 feet from the far or opposite edge of the taxiway, e.g., a 75-foot-wide taxiway would have a combined width of taxiway and lateral clearance zones of 425 feet); and

(iv) All aircraft parking aprons, plus the area 125 feet in width extending beyond each edge all around the aprons.

(2) "Safety precaution" areas means those portions of approach-departure clearance zones and transitional zones where placement of objects incident to contract performance might result in vertical projections at or above the approach-departure clearance, or the transitional surface.

(i) "The approach-departure clearance surface" is an extension of the primary surface and the clear zone at each end of each runway, for a distance of 50,000 feet, first along an inclined (glide angle) and then along a horizontal plane, both flaring symmetrically about the runway centerline extended.

(A) The inclined plane (glide angle) begins in the clear zone 200 feet past the end of the runway (and primary surface) at the same elevation as the end of the runway. It continues upward at a slope of 50:1 (1 foot vertically for each 50 feet horizontally) to an elevation of 500 feet above the established airfield elevation. At that point the plane becomes horizontal, continuing at that same uniform elevation to a point 50,000 feet longitudinally from the beginning of the inclined plane (glide angle) and ending there.

(B) The width of the surface at the beginning of the inclined plane (glide angle) is the same as the width of the clear zone. It then flares uniformly, reaching the maximum width of 16,000 feet at the end.

(ii) The "approach-departure clearance zone" is the ground area under the approach-departure clearance surface.

(iii) The "transitional surface" is a sideways extension of all primary surfaces, clear zones, and approach-departure clearance surfaces along inclined planes.

(A) The inclined plane in each case begins at the edge of the surface.

(B) The slope of the incline plane is 7:1 (1 foot vertically for each 7 feet horizontally). It continues to the point of intersection with the --

(1) Inner horizontal surface (which is the horizontal plane 150 feet above the established airfield elevation); or

(2) Outer horizontal surface (which is the horizontal plane 500 feet above the established airfield elevation), whichever is applicable.

(iv) The "transitional zone" is the ground area under the transitional surface. (It adjoins the primary surface, clear zone, and approach-departure clearance zone.)

(b) General. (1) The Contractor shall comply with the requirements of this clause while --

(i) Operating all ground equipment (mobile or stationary);

(ii) Placing all materials; and

(iii) Performing all work, upon and around all airfields.

(2) The requirements of this clause are in addition to any other safety requirements of this contract.

(c) The Contractor shall -

(1) Report to the Contracting Officer before initiating any work;

(2) Notify the Contracting Officer of proposed changes to locations and operations;

(3) Not permit either its equipment or personnel to use any runway for purposes other than aircraft operation without

permission of the Contracting Officer, unless the runway is -

(i) Closed by order of the Contracting Officer; and

(ii) Marked as provided in paragraph (d)(2) of this clause;

(4) Keep all paved surfaces, such as runways, taxiways, and hardstands, clean at all times and, specifically, free from small stones which might damage aircraft propellers or jet aircraft;

(5) Operate mobile equipment according to the safety provisions of this clause, while actually performing work on the airfield. At all other times, the Contractor shall remove all mobile equipment to locations -

(i) Approved by the Contracting Officer;

(ii) At a distance of at least 750 feet from the runway centerline, plus any additional distance; and

(iii) Necessary to ensure compliance with the other provisions of this clause; and

(6) Not open a trench unless material is on hand and ready for placing in the trench. As soon as practicable after material has been placed and work approved, the Contractor shall backfill and compact trenches as required by the contract. Meanwhile, all hazardous conditions shall be marked and lighted in accordance with the other provisions of this clause.

(d) Landing areas. The Contractor shall -

(1) Place nothing upon the landing areas without the authorization of the Contracting Officer;

(2) Outline those landing areas hazardous to aircraft, using (unless otherwise authorized by the Contracting Officer) red flags by day, and electric, battery-operated low-intensity red flasher lights by night;

(3) Obtain, at an airfield where flying is controlled, additional permission from the control tower operator every time before entering any landing area, unless the landing area is marked as hazardous in accordance with paragraph (d)(2) of this clause;

(4) Identify all vehicles it operates in landing areas by means of a flag on a staff attached to, and flying above, the vehicle. The flag shall be three feet square, and consist of a checkered pattern of international orange and white squares of 1 foot on each side (except that the flag may vary up to ten percent from each of these dimensions);

(5) Mark all other equipment and materials in the landing areas, using the same marking devices as in paragraph (d)(2) of this clause; and

(6) Perform work so as to leave that portion of the landing area which is available to aircraft free from hazards, holes, piles of material, and projecting shoulders that might damage an airplane tire.

(e) Safety precaution areas. The Contractor shall -

(1) Place nothing upon the safety precaution areas without authorization of the Contracting Officer;

(2) Mark all equipment and materials in safety precaution areas, using (unless otherwise authorized by the Contracting Officer) red flags by day, and electric, battery-operated, low-intensity red flasher lights by night; and

(3) Provide all objects placed in safety precaution areas with a red light or red lantern at night, if the objects project above the approach-departure clearance surface or above the transitional surface.

252.242-7000 POSTAWARD CONFERENCE (DEC 1991)

The Contractor agrees to attend any postaward conference convened by the contracting activity or contract administration office in accordance with Federal Acquisition Regulation subpart 42.5.

(End of clause)

252.242-7004 MATERIAL MANAGEMENT AND ACCOUNTING SYSTEM (SEP 1996)

(a) Definitions. As used in this clause--

(1) Material management and accounting system means the Contractor's system or systems for planning, controlling, and accounting for the acquisition, use, issuing, and disposition of material. Material management and accounting systems may be manual or automated. They may be stand-alone systems or they may be integrated with planning, engineering, estimating, purchasing, inventory, accounting, or other systems.

(2) Valid time-phased requirements means material which is--

Needed to fulfill the production plan, including reasonable quantities for scrap, shrinkage, yield, etc.; and

(ii) Charged/billed to contracts or other cost objectives in a manner consistent with the need to fulfill the production plan.

(3) Contractor means a business unit as defined in section 31.001 of the Federal Acquisition Regulation (FAR).

(b) General. The Contractor agrees to--

(1) Maintain a material management and accounting system (MMAS) that--

(i) Reasonably forecasts material requirements;

(ii) Ensures that costs of purchased and fabricated material charged or allocated to a contract are based on valid time-phased requirements; and

(iii) Maintains a consistent, equitable, and unbiased logic for costing of material transactions.

(2) Assess its MMAS and take reasonable action to comply with the MMAS standards in paragraph (f) of this clause.

(c) Applicability. Paragraphs (d) and (e) of this clause apply only if the Contractor--

(1) Is a large business; and

(2) Received, in its fiscal year preceding award of this contract, Department of Defense prime contracts or subcontracts, and their modifications totaling--

(i) $70 million or more; or

(ii) $30 million or more (but less than $70 million), and is notified in writing by the Contracting Officer that paragraphs

(d) and (e) apply.

(d) Disclosure, demonstration, and maintenance requirements. (1) The Contractor shall--

Disclose its MMAS to the Administrative Contracting Officer in writing; and

(ii) If requested by the Administrative Contracting Officer, demonstrate that the MMAS conforms to the standards in paragraph (f) of this clause.

(2) An MMAS disclosure is adequate when the Contractor has provided the Administrative Contracting Officer with documentation which--

(i) Accurately describes those policies, procedures, and practices that the Contractor currently uses in its MMAS; and

(ii) Provides sufficient detail for the Government to reasonably make an informed judgment regarding the adequacy of the MMAS.

(3) An MMAS demonstration is adequate when the Contractor has provided the Administrative Contracting Officer--

(i) Sufficient evidence to demonstrate the degree of compliance of its MMAS with the standards at paragraph (f) of this clause; and

(ii) Identification of any significant deficiencies, the estimated cost impact of the deficiency, and a comprehensive corrective action plan.

(4) The Contractor shall disclose significant changes in its MMAS to the Administrative Contracting Officer within 30 days of implementation.

(5) If the contractor desires the Government to protect such information as privileged or confidential, the Contractor shall--

(i) Notify the Government representative to whom the information is submitted, i.e., the ACO, or the auditor; and

(ii) Ensure an appropriate legend is on the face of the document(s) at the time of submission.

(e) Deficiencies. (1) If the Contractor receives a report which identifies deficiencies in its MMAS, the Contractor agrees to respond as follows--

(i) If the Contractor agrees with the report findings and recommendations, the Contractor shall--

(A) Within 30 days, state its agreement in writing; and

(B) Within 60 days, correct the deficiencies or submit a corrective action plan.

(ii) If the Contractor disagrees with the report findings and recommendations, the Contractor shall, within 30 days, state its rationale for each area of disagreement.

(2) The Administrative Contracting Officer shall evaluate the Contractor's response and notify the Contractor of the--

(i) Determination concerning remaining deficiencies;

(ii) Adequacy of any proposed or completed corrective action plan; and

(iii) Need for any new or revised corrective action plan.

(f) MMAS standards. MMAS systems shall have adequate internal accounting and administrative controls to ensure system and data integrity, and comply with the following:

(1) Have an adequate system description including policies, procedures, and operating instructions which comply with the Federal Acquisition Regulation and Defense FAR Supplement;

(2) Ensure that costs of purchased and fabricated material charged or allocated to a contract are based on valid time-phased requirements as impacted by minimum/economic order quantity restrictions--

(i) A 98 percent bill of material accuracy and a 95 percent master production schedule accuracy are desirable as a goal in order to ensure that requirements are both valid and appropriately time-phased.

(ii) If systems have accuracy levels below these, the Contractor shall demonstrate that--

(A) There is no material harm to the Government due to lower accuracy levels; and

(B) The cost to meet the accuracy goals is excessive in relation to the impact on the Government;

(3) Provide a mechanism to identify, report, and resolve system control weaknesses and manual override. Systems should identify operational exceptions such as excess/residual inventory as soon as known;

(4) Provide audit trails and maintain records (manual and those in machine readable form) necessary to evaluate system logic and to verify through transaction testing that the system is operating as desired;

(5) Establish and maintain adequate levels of record accuracy, and include reconciliation of recorded inventory quantities to physical inventory by part number on a periodic basis. A 95 percent accuracy level is desirable. If systems have an accuracy level below 95 percent, the Contractor shall demonstrate that--

(i) There is no material harm to the Government due to lower accuracy levels; and

(ii) The cost to meet the accuracy goal is excessive in relation to the impact on the Government;

(6) Provide detailed descriptions of circumstances which will result in manual or system generated transfers of parts;

(7) Maintain a consistent, equitable, and unbiased logic for costing of material transactions--

(i) The Contractor shall maintain and disclose written policies describing the transfer methodology and the loan/pay-back technique.

(ii) The costing methodology may be standard or actual cost, or any of the inventory costing methods in 48 CFR 9904.411-50(b). Consistency shall be maintained across all contract and customer types, and from accounting period to accounting period for initial charging and transfer charging.

(iii) The system should transfer parts and associated costs within the same billing period. In the few instances where this may not be appropriate, the Contractor may accomplish the material transaction using a loan/pay-back technique. The “loan/pay-back technique” means that the physical part is moved temporarily from the contract, but the cost of the part remains on the contract. The procedures for the loan/pay-back technique must be approved by the Administrative Contracting Officer. When the technique is used, the Contractor shall have controls to ensure--

(A) Parts are paid back expeditiously;

(B) Procedures and controls are in place to correct any overbilling that might occur;

(C) Monthly, at a minimum, identification of the borrowing contract and the date the part was borrowed; and

(D) The cost of the replacement part is charged to the borrowing contract;

(8) Where allocations from common inventory accounts are used, have controls (in addition to those in paragraphs (b)(2) and (7) of this clause) to ensure that--

(i) Reallocations and any credit due are processed no less frequently than the routine billing cycle;

(ii) Inventories retained for requirements which are not under contract are not allocated to contracts; and

(iii) Algorithms are maintained based on valid and current data;

(9) Notwithstanding FAR 45.505-3(f)(1)(ii), have adequate controls to ensure that physically commingled inventories that may include material for which costs are charged or allocated to fixed-price, cost-reimbursement, and commercial contracts do not compromise requirements of any of the standards in paragraphs (f)(1) through (8) of this clause. Government furnished material shall not be--

(i) Physically commingled with other material; or

(ii) Used on commercial work; and

(10) Be subjected to periodic internal audits to ensure compliance with established policies and procedures.

(End of clause)

252.243-7001 PRICING OF CONTRACT MODIFICATIONS (DEC 1991)

When costs are a factor in any price adjustment under this contract, the contract cost principles and procedures in FAR part 31 and DFARS part 231, in effect on the date of this contract, apply.

252.243-7002 REQUESTS FOR EQUITABLE ADJUSTMENT (MAR 1998)

(a) The amount of any request for equitable adjustment to contract terms shall accurately reflect the contract adjustment for which the Contractor believes the Government is liable. The request shall include only costs for performing the change, and shall not include any costs that already have been reimbursed or that have been separately claimed. All indirect costs included in the request shall be properly allocable to the change in accordance with applicable acquisition regulations.

(b) In accordance with 10 U.S.C. 2410(a), any request for equitable adjustment to contract terms that exceeds the simplified acquisition threshold shall bear, at the time of submission, the following certificate executed by an individual authorized to certify the request on behalf of the Contractor:

I certify that the request is made in good faith, and that the supporting data are accurate and complete to the best of my knowledge and belief.

(Official's Name)

(Title)

(c) The certification in paragraph (b) of this clause requires full disclosure of all relevant facts, including--

(1) Cost or pricing data if required in accordance with subsection 15.403-4 of the Federal Acquisition Regulation (FAR); and

(2) Information other than cost or pricing data, in accordance with subsection 15.403-3 of the FAR, including actual cost data and data to support any estimated costs, even if cost or pricing data are not required.

(d) The certification requirement in paragraph (b) of this clause does not apply to----

(1) Requests for routine contract payments; for example, requests for payment for accepted supplies and services, routine vouchers under a cost-reimbursement type contract, or progress payment invoices; or

(2) Final adjustment under an incentive provision of the contract.

252.244-7000 SUBCONTRACTS FOR COMMERCIAL ITEMS AND COMMERCIAL COMPONENTS (DOD) (MAR 2000)

In addition to the clauses listed in paragraph (c) of the Subcontracts for Commercial Items and Commercial Components clause of this contract (Federal Acquisition Regulation 52.244-6), the Contractor shall include the terms of the following clauses, if applicable, in subcontracts for commercial items or commercial components, awarded at any tier under this contract:

252.225-7014 Preference for Domestic Specialty Metals, Alternate I (10 U.S.C. 2241 note).

252.247-7023 Transportation of Supplies by Sea (10 U.S.C. 2631).

252.247-7024 Notification of Transportation of Supplies by Sea (10 U.S.C. 2631).

(End of clause)

252.247-7023 TRANSPORTATION OF SUPPLIES BY SEA (MAY 2002)

(a) Definitions. As used in this clause --

(1) "Components" means articles, materials, and supplies incorporated directly into end products at any level of manufacture, fabrication, or assembly by the Contractor or any subcontractor.

(2) "Department of Defense" (DoD) means the Army, Navy, Air Force, Marine Corps, and defense agencies.

(3) "Foreign flag vessel" means any vessel that is not a U.S.-flag vessel.

(4) "Ocean transportation" means any transportation aboard a ship, vessel, boat, barge, or ferry through international waters.

(5) "Subcontractor" means a supplier, materialman, distributor, or vendor at any level below the prime contractor whose contractual obligation to perform results from, or is conditioned upon, award of the prime contract and who is performing any part of the work or other requirement of the prime contract.

(6) "Supplies" means all property, except land and interests in land, that is clearly identifiable for eventual use by or owned by the DoD at the time of transportation by sea.

(i) An item is clearly identifiable for eventual use by the DoD if, for example, the contract documentation contains a reference to a DoD contract number or a military destination.

(ii) "Supplies" includes (but is not limited to) public works; buildings and facilities; ships; floating equipment and vessels of every character, type, and description, with parts, subassemblies, accessories, and equipment; machine tools; material; equipment; stores of all kinds; end items; construction materials; and components of the foregoing.

(7) "U.S.-flag vessel" means a vessel of the United States or belonging to the United States, including any vessel registered or having national status under the laws of the United States.

(b)(1) The Contractor shall use U.S.-flag vessels when transporting any supplies by sea under this contract.

(2) A subcontractor transporting supplies by sea under this contract shall use U.S.-flag vessels if--

(i) This contract is a construction contract; or

(ii) The supplies being transported are--

(A) Noncommercial items; or

(B) Commercial items that--

(1) The Contractor is reselling or distributing to the Government without adding value (generally, the Contractor does not add value to items that it contracts for f.o.b. destination shipment);

(2) Are shipped in direct support of U.S. military contingency operations, exercises, or forces deployed in humanitarian or peacekeeping operations; or

(3) Are commissary or exchange cargoes transported outside of the Defense Transportation System in accordance with 10 U.S.C. 2643.

(c) The Contractor and its subcontractors may request that the Contracting Officer authorize shipment in foreign-flag vessels, or designate available U.S.-flag vessels, if the Contractor or a subcontractor believes that --

(1) U.S.-flag vessels are not available for timely shipment;

(2) The freight charges are inordinately excessive or unreasonable; or

(3) Freight charges are higher than charges to private persons for transportation of like goods.

(d) The Contractor must submit any request for use of other than U.S.-flag vessels in writing to the Contracting Officer at least 45 days prior to the sailing date necessary to meet its delivery schedules. The Contracting Officer will process requests submitted after such date(s) as expeditiously as possible, but the Contracting Officer's failure to grant approvals to meet the shipper's sailing date will not of itself constitute a compensable delay under this or any other clause of this contract. Requests shall contain at a minimum --

(1) Type, weight, and cube of cargo;

(2) Required shipping date;

(3) Special handling and discharge requirements;

(4) Loading and discharge points;

(5) Name of shipper and consignee;

(6) Prime contract number; and

(7) A documented description of efforts made to secure U.S.-flag vessels, including points of contact (with names and telephone numbers) with at least two U.S.-flag carriers contacted. Copies of telephone notes, telegraphic and facsimile message or letters will be sufficient for this purpose.

(e) The Contractor shall, within 30 days after each shipment covered by this clause, provide the Contracting Officer and the Maritime Administration, Office of Cargo Preference, U.S. Department of Transportation, 400 Seventh Street SW., Washington, DC 20590, one copy of the rated on board vessel operating carrier's ocean bill of lading, which shall contain the following information:

(1) Prime contract number;

(2) Name of vessel;

(3) Vessel flag of registry;

(4) Date of loading;

(5) Port of loading;

(6) Port of final discharge;

(7) Description of commodity;

(8) Gross weight in pounds and cubic feet if available;

(9) Total ocean freight in U.S. dollars; and

(10) Name of the steamship company.

(f) The Contractor shall provide with its final invoice under this contract a representation that to the best of its knowledge and belief--

(1) No ocean transportation was used in the performance of this contract;

(2) Ocean transportation was used and only U.S.-flag vessels were used for all ocean shipments under the contract;

(3) Ocean transportation was used, and the Contractor had the written consent of the Contracting Officer for all non-U.S.-flag ocean transportation; or

(4) Ocean transportation was used and some or all of the shipments were made on non-U.S.-flag vessels without the

written consent of the Contracting Officer. The Contractor shall describe these shipments in the following format:

ITEM DESCRIPTION	CONTRACT LINE ITEMS	QUANTITY
TOTAL		

(g) If the final invoice does not include the required representation, the Government will reject and return it to the Contractor as an improper invoice for the purposes of the Prompt Payment clause of this contract. In the event there has been unauthorized use of non-U.S.-flag vessels in the performance of this contract, the Contracting Officer is entitled to equitably adjust the contract, based on the unauthorized use.

(h) In the award of subcontracts for the types of supplies described in paragraph (b)(2) of this clause, the Contractor shall flow down the requirements of this clause as follows:

(1) The Contractor shall insert the substance of this clause, including this paragraph (h), in subcontracts that exceed the simplified acquisition threshold in part 2 of the Federal Acquisition Regulation.

(2) The Contractor shall insert the substance of paragraphs (a) through (e) of this clause, and this paragraph (h), in subcontracts that are at or below the simplified acquisition threshold in part 2 of the Federal Acquisition Regulation.

(End of clause)

252.247-7024 NOTIFICATION OF TRANSPORTATION OF SUPPLIES BY SEA (MAR 2000)

(a) The Contractor has indicated by the response to the solicitation provision, Representation of Extent of Transportation by Sea, that it did not anticipate transporting by sea any supplies. If, however, after the award of this contract, the Contractor learns that supplies, as defined in the Transportation of Supplies by Sea clause of this contract, will be transported by sea, the Contractor --

(1) Shall notify the Contracting Officer of that fact; and

(2) Hereby agrees to comply with all the terms and conditions of the Transportation of Supplies by Sea clause of this contract.

(b) The Contractor shall include this clause; including this paragraph (b), revised as necessary to reflect the relationship of the contracting parties--

(1) In all subcontracts under this contract, if this contract is a construction contract; or

(2) If this contract is not a construction contract, in all subcontracts under this contract that are for--

(i) Noncommercial items; or

(ii) Commercial items that--

(A) The Contractor is reselling or distributing to the Government without adding value (generally, the Contractor does not add value to items that it subcontracts for f.o.b. destination shipment);

(B) Are shipped in direct support of U.S. military contingency operations, exercises, or forces deployed in humanitarian or peacekeeping operations; or

(C) Are commissary or exchange cargoes transported outside of the Defense Transportation System in accordance with 10 U.S.C. 2643.

(End of clause)

Section 00800 - Special Contract Requirements

CLAUSES INCORPORATED BY FULL TEXT

52.211-10 COMMENCEMENT, PROSECUTION, AND COMPLETION OF WORK (APR 1984)

The Contractor shall be required to (a) commence work under this contract within 10 calendar days after the date the Contractor receives the notice to proceed, (b) prosecute the work diligently, and (c) complete the entire work ready for use not later than the following:

Base Bid plus Option 2	1470 days with 132 weather days
Base Bid plus All Options	1650 days with 150 weather days

The time stated for completion shall include final cleanup of the premises.

(End of clause)

52.211-12 LIQUIDATED DAMAGES--CONSTRUCTION (SEP 2000)

(a) If the Contractor fails to complete the work within the time specified in the contract, the Contractor shall pay liquidated damages to the Government in the amount of $1,810.73 per calendar day until the work is completed or accepted for the entire project schedule. Additional liquidated damages of $1,500.00 per calendar day until the work is completed or accepted will be assessed for the Base Bid. If Option 3 is awarded an additional $1,500.00 per calendar day of delay until the work is completed or accepted will be assessed.

(b) If the Government terminates the Contractor's right to proceed, liquidated damages will continue to accrue until the work is completed. These liquidated damages are in addition to excess costs of repurchase under the Termination clause.

(End of clause)

52.217-7 OPTION FOR INCREASED QUANTITY--SEPARATELY PRICED LINE ITEM (MAR 1989)

The Government may require the delivery of the numbered line item, identified in the Schedule as an option item, in the quantity and at the price stated in the Schedule. The Contracting Officer may exercise the options by written notice to the Contractor within 226 days of the basic contract award. Delivery of added items shall continue at the same rate that like items are called for under the contract, unless the parties otherwise agree.

(End of clause)

52.219-4002 REPORTING REQUIREMENTS--SUBCONTRACTING PLAN (CESAD-CT JUL 1993)

(a) Retainage will be withheld from progress payments in an amount sufficient to protect the Government's ability to assess Liquidated Damages in accordance with FAR clause 52.219-0016 for failure to submit timely SF 294 and SF 295 Reports. The amount of retainage will be determined in accordance with the following formula:

(b) Total dollar amount proposed for subcontracting to small business multiplied by percentage of actual progress on the contract, up to a maximum of 10% of the given progress payment, shall be withheld from the next progress payment due after a contractor fails to submit a required report. If one or more reports have been submitted before such failure, formula for determining the amount of retainage will be adjusted by deducting any amounts reported as subcontracted to small business from the total dollar amount proposed to be subcontracted and the difference multiplied by the percent of actual progress, up to a maximum of 10% of the given progress payment.

(End of clause)

52.223-9 ESTIMATE OF PERCENTAGE OF RECOVERED MATERIAL CONTENT FOR EPA-DESIGNATED PRODUCTS (AUG 2000)

(a) Definitions. As used in this clause--

Postconsumer material means a material or finished product that has served its intended use and has been discarded for disposal or recovery, having completed its life as a consumer item. Postconsumer material is a part of the broader category of "recovered material."

Recovered material means waste materials and by-products recovered or diverted from solid waste, but the term does not include those materials and by-products generated from, and commonly reused within, an original manufacturing process.

(b) The Contractor, on completion of this contract, shall--

(1) Estimate the percentage of the total recovered material used in contract performance, including, if applicable, the percentage of postconsumer material content; and

(2) Submit this estimate to the Corps of Engineer Field Office, Robins AFB, GA.

(End of clause)

52.223-4002 U.S. ARMY CORPS OF ENGINEERS SAFETY AND HEALTH REQUIREMENTS MANUAL, EM 385-1-1

This paragraph applies to contracts and purchase orders that require the contractor to comply with EM 385-1-1 (e.g., contracts that include the Accident Prevention clause at FAR 52.236-13 and/or other safety provisions). EM 385-1-1 and its changes are available at http://www.hq.usace.army.mil. (At the HQ homepage, select Safety and Occupational Health.) The Contractor shall be responsible for complying with the current edition and all changes posted on the web through the date that is 10 calendar days prior to the date offers are due. If the solicitation is amended to extend the time set for receipt of offers, the 10 calendar days rule stated above shall be applied against the amended date. (For example, if offers are due on 10 April, all changes posted on or before 31 March shall apply to the contract. If the time for receipt of offers is extended from 10 April to 20 April, all changes posted on or before 10 April shall apply to the contract.)

52.228-4001 RECOMMENDED INSURANCE COVERAGE – MAY 2000

The Design-Build Contractor's attention is invited to the contract requirements concerning "RESPONSIBILITY OF THE CONTRACTOR FOR DESIGN' and 'WARRANTY OF CONSTURCTION WORK". These requirements vest in the Contractor complete responsibility for the professional quality, technical accuracy, and coordination of all design, drawings, specifications and other work or materials furnished by his in-house or consultant forces. The Design-

Build Contractor must correct and revise any errors or deficiencies in his work, notwithstanding any review, approval, acceptance or payment by the Government. The Contractor must correct and change any work resulting from his defective design at no additional cost to the Government. The requirements further stipulate that the Design-Build Contractor shall be liable to the Government for the damages to the Government caused by negligent performance. Though it is not am mandatory requirement, this is to recommend that the Design-Build Contractor investigate and obtain appropriate insurance coverage for such liability protection.

(End of Clause)

52.228-4002 REQUIRED INSURANCE (FEB 1987 SAS) (Ref. FAR 28.307)

(a) The Contractor shall procure and maintain during the entire period of his performance under this contract the following minimum insurance:

Comprehensive and Employer's Liability Insurance in the amount required by the State law in which the work is to be performed under this contract.

Comprehensive General Liability Insurance in an amount not less than $500,000 per accident.

Automobile Liability Insurance: $200,000 per person and $500,000 per accident for bodily injury liability and $20,000 property damage liability.

(b) Prior to the commencement of work hereunder, the Contractor shall furnish to the Contracting Officer a certificate or written statement of the above-required insurance. The policies evidencing required insurance shall contain an endorsement to the effect that cancellation, or any material change in the policies adversely affecting the interests of the Government in such insurance, shall not be effective for such period as may be prescribed by the laws of the State in which this contract is to be performed and in no event less than 30 days after written notice thereof to the Contracting Officer.

(c) The Contractor agrees to insert the substance of this clause, including this subparagraph (c), in all subcontracts hereunder.

(End of clause)

52.231-5000 EQUIPMENT OWNERSHIP AND OPERATING EXPENSE SCHEDULE
MAR 1995)--EFARS

(a) This clause does not apply to terminations. See 52.249-5000, Basis for Settlement of Proposals and FAR Part 49.

(b) Allowable cost for construction and marine plant and equipment in sound workable condition owned or controlled and furnished by a contractor or subcontractor at any tier shall be based on actual cost data for each piece of equipment or groups of similar serial and series for which the Government can determine both ownership and operating costs from the contractor's accounting records. When both ownership and operating costs cannot be determined for any piece of equipment or groups of similar serial or series equipment from the contractor's accounting records, costs for that equipment shall be based upon the applicable provisions of EP 1110-1-8, Construction Equipment Ownership and Operating Expense Schedule, Region *III*. Working conditions shall be considered to be average for determining equipment rates using the schedule unless specified otherwise by the contracting officer. For equipment not included in the schedule, rates for comparable pieces of equipment may be used or a rate may be developed using the formula provided in the schedule. For forward pricing, the schedule in effect at the time of negotiations shall apply. For retroactive pricing, the schedule in effect at the time the work was performed shall apply.

(c) Equipment rental costs are allowable, subject to the provisions of FAR 31.105(d)(ii) and FAR 31.205-36. Rates for equipment rented from an organization under common control, lease-purchase arrangements, and sale-leaseback arrangements, will be determined using the schedule, except that actual rates will be used for equipment leased from

an organization under common control that has an established practice of leasing the same or similar equipment to unaffiliated lessees.

(d) When actual equipment costs are proposed and the total amount of the pricing action exceeds the small purchase threshold, the contracting officer shall request the contractor to submit either certified cost or pricing data, or partial/limited data, as appropriate. The data shall be submitted on Standard Form 1411, Contract Pricing Proposal Cover Sheet.

(End of clause)

52.232-4007 ACCOUNTING AND APPROPRIATION DATA (APR 1989 CESAS-RM)

Accounting and Appropriation Data will be identified at time of contract award.

(End of clause)

52.232-4008 DESIGNATED BILLING OFFICE (APR 1989 CESAS-RM)

Invoices will be mailed to:

Robins AFB AO (CD-RO)
Building 702, 625 7th St
Warner Robins, GA 31098

(End of Clause)

52.232-4009 DESIGNATED PAYMENT OFFICE (AUG 1998 CESAS-RM-F)

Payment will be made by:

U.S. Army Corps of Engineers Finance Center
ATTN: CEFC-AO-P
5720 Integrity Drive
Millington, TN 38054-5005

(End of clause)

52.236-1 PERFORMANCE OF WORK BY THE CONTRACTOR (APR 1984)

The Contractor shall perform on the site, and with its own organization, work equivalent to at least twenty percent (20%) percent of the total amount of work to be performed under the contract. This percentage may be reduced by a supplemental agreement to this contract if, during performing the work, the Contractor requests a reduction and the Contracting Officer determines that the reduction would be to the advantage of the Government.

(End of clause)

52.236-4 PHYSICAL DATA (APR 1984)

Data and information furnished or referred to below is for the Contractor's information. The Government shall not be responsible for any interpretation of or conclusion drawn from the data or information by the Contractor.

Physical Data will be provided with Phase II

(End of clause)

52.236-14 AVAILABILITY AND USE OF UTILITY SERVICES (APR 1984)

(a) The Government shall make all reasonably required amounts of utilities available to the Contractor from existing outlets and supplies, as specified in the contract. Unless otherwise provided in the contract, the amount of each utility service consumed shall be charged to or paid for by the Contractor at prevailing rates charged to the Government or, where the utility is produced by the Government, at reasonable rates determined by the Contracting Officer. The Contractor shall carefully conserve any utilities furnished without charge.

(b) The Contractor, at its expense and in a workmanlike manner satisfactory to the Contracting Officer, shall install and maintain all necessary temporary connections and distribution lines, and all meters required to measure the amount of each utility used for the purpose of determining charges. Before final acceptance of the work by the Government, the Contractor shall remove all the temporary connections, distribution lines, meters, and associated paraphernalia.

(End of clause)

52.236-4001 DESIGN-BUILD CONTRACT-ORDER OF PRECEDENCE – AUG 1997

(a) The contract includes the standard contract clauses and schedules current at the time of award. It also entails: (1) the solicitation in its entirety, including all drawings, cuts and illustrations, and any amendments during proposal evaluation and selection, and (2) the successful Offeror’s accepted proposal. The contract constitutes and defines the entire agreement between the Contractor and the Government. No documentation shall be omitted which in any ways bears upon the terms of that agreement.

(b) In the event of conflict or inconsistency between any of the provisions of the various portions of this contract, precedence shall be given in the following order:

(1) Betterments: Any portions of the Offeror’s proposal which both meet and exceed the provisions of the solicitation

(2) The provisions of the solicitation. (see also Contract Clause: SPECIFICATIONS AND DRAWINGS FOR CONSTRUCTION.)

(3) All other provisions of the accepted proposal.

(4)Any design products, including but not limited to plans, specifications, engineering studies and analyses, shop drawings, equipment installation drawings, etc. These are “deliverables” under the contract and are not part of the contract itself. Design products must conform to all provisions of the contract, in the order of precedence herein.

(End of Clause)

52.236-4003 RESPONSIBILITY OF THE CONTRACTOR FOR DESIGN – FEB 2000

(i) The Contractor shall be responsible for the professional quality, technical accuracy, and the coordination of all designs, drawings, specifications, and other non-construction services furnished by the Contractor under this contract. The Contractor shall, without additional compensation, correct or revise any errors or deficiency in its designs, drawings, specifications, and other non-construction services and perform any necessary rework or modifications, including any damage to real or personal property, resulting from the design error or omission.

(ii) Neither the Government's review, approval or acceptance of, nor payment for, the services required under this contract shall be construed to operate as a waiver of any rights under this contract or of any cause of action arising out of the performance of this contract. The Contractor shall be and remain liable to the Government in accordance wit applicable law for all damages to the Government caused by the Contractor's negligent performance of any of these services furnished under this contract.

(iii) The rights and remedies of the Government provided for under this contract are in addition to any other rights and remedies provided by law

(iv) If the Contractor is comprised of more than one legal entity shall be jointly and severally liable thereunder.

(End of Clause)

52.236-4004 SEQUENCE OF DESIGN-CONSTRUCTION – AUG 1997

(a) After receipt of the Contract Notice to Proceed (NTP) the Contractor shall initiate design, comply with all design submission requirements as covered under Division 01 General Requirements, and obtain Government review of each submission. No construction may be started, <with the exception of….clearing, etc…> until the Government reviews the Final Design submission and determines it satisfactory for purposes of beginning construction. The Contracting Officer will notify the Contractor when the design is cleared for construction. The Government will not grant any time extension for any design resubmittal required when, in the opinion of the Contracting Officer, the initial submission failed to meet the minimum quality requirements as set forth in the Contract.

(b) If the Government allows the Contractor to proceed with limited construction based on pending minor revisions to the reviewed Final Design submission, no payment will be made for any in-place construction related to the pending revisions until they are completed, resubmitted and are satisfactory to the Government.

(c) No payment will be made for any in-place construction until all required submittals have been made, reviewed and are satisfactory to the Government.

(End of Clause)

52.236-4005 SEQUENCE OF DESIGN- CONSTRUCTION (FAST TRACK) – AUG 1997

(a) After receipt of the Contract Notice to Proceed (NTP) the Contractor shall initiate design, comply with all design submissions requirements as covered under Division 01 General Requirements, and obtain Government review of each submission. The contractor may begin construction on portions of the work for which the Government has

reviewed the final design submission and has determined satisfactory for purposes of beginning construction. The Contracting Officer will notify the Contractor when the design is cleared for construction. The Government will not grant any time extension for any design resubmittal required when, in the opinion of the Contracting Officer, the initial submission failed to meet the minimum quality requirements as set forth in the Contract.

(b) If the Government allows the Contractor to proceed with the construction based on pending minor revisions to the reviewed Final Design submission, no payment will be made for any in-place construction related to the pending revisions until they are completed, resubmitted and are satisfactory to the Government.

(c) No payment will be made for any in-place construction until all required submittals have been made, reviewed and are satisfactory to the Government.

(End of Clause)

52.236-4006 CONSTRUCTOR'S ROLE DURING DESIGN – JUN 1998

The Contractor's construction management key personnel shall be actively involved during the design process to effectively integrate the design and construction requirements of this contract. In addition to the typical required construction activities, the constructor's involvement includes, but is not limited to actions such as: integrating the design schedule into the Master Schedule to maximize the effectiveness of fast-tracking design and construction (within the limits allowed in the contract), ensuring constructability and economy of the design, integrating the shop drawing and installation drawing process into the design, executing the material and equipment acquisition programs to meet critical schedules, effectively interfacing the construction QC program with the design QC program, and maintaining and providing the design team with accurate, up-to-date redline and as-built documentation. The Contractor shall require and manage the active involvement of key trade subcontractors in the above activities.

(End of Clause)

52.236-4007 TRAINING – FEB 2000

The Contractor shall provide operational and maintenance training for all systems furnished under this contract for the operating and maintenance personnel. The system manufacturer shall conduct the training, where feasible. All operation and maintenance manuals shall be submitted and approved prior to conducting the training, where feasible. All operation and maintenance manuals shall be submitted and approved prior to conducting the training and shall be used during training. The Contractor shall video tape the training session on VHS tapes and provide the tapes to the Government.

(End of Clause)

52.236-4008 DESIGN CONFERENCES – AUG 1997

(a) Pre-Work: As part of the Pre-Work Conference conducted after contract award, key representatives of the Government and the Contractor will review the design submission and procedures specified herein, discuss the preliminary design schedule and provisions for phase completion of the D-B documents with construction activities (fast tracking), as appropriate, meet with Corps of Engineers Design Review personnel and key Using Agency points of contract and any other appropriate pre-design discussion items.

(b) Design Charette: After award of the contract, the Contractor shall visit the site and conduct extensive interviews, and problem solving discussions with the individual users, base personnel, Corps of Engineers personnel to acquire all necessary site information, review user options, and discuss user needs. The Contractor shall document all discussions. The design shall be finalized as direct result of these meetings.

(c) Design Review Conferences: Review conferences will be held on base for each design submittal. The Contractor will bring the personnel that developed the design submittal to the review conference. The conferences will take place the week after the review is complete.

(End of Clause)

52.236-4009 PARTNERING – FEB 2000

In order to most effectively accomplish this contract, the Government proposes to form a partnership with the Contractor to develop a cohesive building team. It is anticipated that this partnership would involve the Air Force, the Contractor, primary subcontractors and designers and the Corps of Engineers. This partnership would strive to develop a cooperative management team drawing on the strengths of each team member in an effort to achieve quality project within budget and on schedule. This partnership would be bilateral in membership and participation will be totally voluntary. Any cost associated with effectuating this partnership, excluding travel and lodging cost of Government and contractor personnel, will be split between the Government and the contractor. The one-day partnering meeting will be held off base in Warner Robins at a location to be determined. An independent Government Representative will facilitate the meeting.

(End of Clause)

52.236-4013 CONTRACTOR-PREPARED NETWORK ANALYSIS SYSTEM
(January 2002 SAS) (Ref. DFARS 236.273)

The progress chart to be prepared by the contractor pursuant to FAR 52.236-15, Schedules for Construction Contracts, shall utilize the Critical Path Method (CPM) of network calculation. (See Attachment 1 to Section 00800).

52.236-4015 PRECONSTRUCTION CONFERENCE (OCT 1988 SAS) (Ref. FAR 36.305)

(a) A preconstruction conference will be arranged by the Area/Resident Engineer after award of contract and before commencement of work. The Area/Resident Engineer will notify the Contractor of the time and date set for the meeting. At this conference, the Contractor shall be oriented with respect to Government procedures and line of authority, contractual, administrative, and construction matters.

(b) The Contractor shall bring to this conference, in completed form, a Certificate of Insurance, plus the following items in either completed or draft form:

Accident Prevention Plan (5 copies)
(use format shown in Attachment 1 to SECTION 00800)
Quality Control Plan (5 copies)

Letter Appointing Superintendent
Transmittal Register
Power of Attorney and Certified Copy of Resolution
Network Analysis System, when applicable
List of Subcontractors

(c) A letter of record will be written documenting all items discussed at the conference, and a copy will be furnished by the Area/Resident Engineer to all in attendance.

(End of clause)

52.236-4016 VIDEO TAPING OPERATING AND MAINTENANCE INSTRUCTIONS (MAR 1987 SASCD-SQ)

For all of the operating and maintenance instructions which are required in the contract specifications, the Contractor shall video tape these instructions as they are presented to the Government representatives. These tapes shall provide clear and understandable detailed instructions for all items required by the contract specifications. The tapes shall be prepared by an experienced video director/cameraman using good quality half-inch VHS color tape with correct sound equipment, lighting, and backdrop. The sound and picture quality shall be high and subject to approval by the Contracting Officer. The tapes are intended as followup training for other Government representatives at a later date. They must be suitable for this purpose. The Contractor shall be responsible for the contents of the instructions and shall verify that they are correct prior to taping. The Contractor may submit individual equipment manufacturer's instructional tape(s), provided they meet the above qualifications and cover the actual equipment that is installed. The tape(s) shall be for specific equipment identified by contents and contract name and number. The Contractor shall submit one copy of the tape(s) to the Contracting Officer for review and approval. Unacceptable tapes are to be corrected by the Contractor as indicated by the Contracting Officer at no additional cost to the Government.

(End of clause)

52.236-4017 SUBMITTAL OF MODIFICATION COST ESTIMATE PROPOSALS (MAR 1992 SAS)
(Ref. DFARS 52.236-7000)

When submittals of Cost Estimate Proposals are required for additions or deletions to work under this contract by modification, the Contractor shall use DA Form 5418-R titled "Cost Estimate Analysis" (see Attachment 1 to SECTION 00800). A separate assemblage will be prepared for submittal by each trade affected by the proposed work.
(End of clause)

52.244-4001 KEY PERSONNEL, SUBCONTRACTORS AND OUTSIDE ASSOCIATES OR CONSULTANTS – AUG 1997

In connection with the services covered by this contract, any in-house personnel, subcontractors, and outside associates or consultants will be limited to the individuals or firms that were specifically identified and agreed to during negotiations. The contractor shall obtain the Contracting Officer's written consent before making any substitution for these designated in-house personnel, subcontractors, associates, or consultants.

(End of Clause)

52.246-12 INSPECTION OF CONSTRUCTION (AUG 1996)

(a) Definition. "Work" includes, but is not limited to, materials, workmanship, and manufacture and fabrication of components.

(b) The Contractor shall maintain an adequate inspection system and perform such inspections as will ensure that the work performed under the contract conforms to contract requirements. The Contractor shall maintain complete inspection records and make them available to the Government. All work shall be conducted under the general direction of the Contracting Officer and is subject to Government inspection and test at all places and at all reasonable times before acceptance to ensure strict compliance with the terms of the contract.

(c) Government inspections and tests are for the sole benefit of the Government and do not--

(1) Relieve the Contractor of responsibility for providing adequate quality control measures;

(2) Relieve the Contractor of responsibility for damage to or loss of the material before acceptance;

(3) Constitute or imply acceptance; or

(4) Affect the continuing rights of the Government after acceptance of the completed work under paragraph (i) of this section.

(d) The presence or absence of a Government inspector does not relieve the Contractor from any contract requirement, nor is the inspector authorized to change any term or condition of the specification without the Contracting Officer's written authorization.

(e) The Contractor shall promptly furnish, at no increase in contract price, all facilities, labor, and material reasonably needed for performing such safe and convenient inspections and tests as may be required by the Contracting Officer. The Government may charge to the Contractor any additional cost of inspection or test when work is not ready at the time specified by the Contractor for inspection or test, or when prior rejection makes reinspection or retest necessary. The Government shall perform all inspections and tests in a manner that will not unnecessarily delay the work. Special, full size, and performance tests shall be performed as described in the contract.

(f) The Contractor shall, without charge, replace or correct work found by the Government not to conform to contract requirements, unless in the public interest the Government consents to accept the work with an appropriate adjustment in contract price. The Contractor shall promptly segregate and remove rejected material from the premises.

(g) If the Contractor does not promptly replace or correct rejected work, the Government may (1) by contract or otherwise, replace or correct the work and charge the cost to the Contractor or (2) terminate for default the Contractor's right to proceed.

(h) If, before acceptance of the entire work, the Government decides to examine already completed work by removing it or tearing it out, the Contractor, on request, shall promptly furnish all necessary facilities, labor, and material. If the work is found to be defective or nonconforming in any material respect due to the fault of the Contractor or its

subcontractors, the Contractor shall defray the expenses of the examination and of satisfactory reconstruction. However, if the work is found to meet contract requirements, the Contracting Officer shall make an equitable adjustment for the additional services involved in the examination and reconstruction, including, if completion of the work was thereby delayed, an extension of time.

(i) Unless otherwise specified in the contract, the Government shall accept, as promptly as practicable after completion and inspection, all work required by the contract or that portion of the work the Contracting Officer determines can be accepted separately. Acceptance shall be final and conclusive except for latent defects, fraud, gross mistakes amounting to fraud, or the Government's rights under any warranty or guarantee.

(End of clause)

52.246-4001 WARRANTY OF CONSTRUCTION WORK – AUG 1997

(a) In addition to any other warranties in this contract, the Contractor warrants, except as provided in paragraph (1) of this clause, that work performed under this contract conforms to the contract requirements and is free of any defect in equipment, material, or workmanship performed by the Contractor or any subcontractor or supplier at any tier.

(b) This warranty shall contain for a period of year from the date of final acceptance of the work. If the Government takes possession of any part of the work before final acceptance, this warranty shall continue for a period of 1 year from the date the Government takes possession.

(c) The Contractor shall remedy at the Contractor’s expense any failure to conform, or any defect. In addition, the Contractor shall remedy at the Contractor’s expense any damage to Government-owned or controlled real or personal property, when that damage is the result of –

(1) The Contractor’s failure to conform to contract requirements; or

(2) Any defect of equipment, material, or workmanship.

(d) The Contractor shall restore any work damaged in fulfilling the terms and conditions of this clause. The Contractor’s warranty with respect to work repaired or replaced will run for 1 year from the date of repair or replacement.

(e) The Contracting Officer shall notify the Contractor, in writing, within a reasonable time after the discovery of any failure, defect, or damage.

(f) If the Contractor fails to remedy any failure, defect, or damage within a reasonable time after receipt of notice, the Government shall have the right to replace, repair, or otherwise remedy the failure, defect, or damage at the Contractor’s expense.

(g) With respect to all warranties, express or implied, from subcontractors, manufacturers, or suppliers for work performed and materials furnished under this contract, the Contractor shall –

(1) Obtain all warranties that would be given in normal commercial practice:

(2) Require all warranties to be executed, in writing for the benefit of the Government, if directed by the Contracting Officer; and

(3)Enforce warranties for the benefit of the Government, if directed by the Contracting Officer.

(h) In the event the Contractor's warranty under paragraph (b) of this clause has expired, the Government may bring suit at its expense to enforce a subcontractor's, manufacturer's or supplier's warranty.

(i) Unless a defect is caused by the negligence of the Contractor or subcontractor or supplier at any tier, the Contractor shall not be liable for the repair of any defects of material furnished by the Government nor for the repair of any damage that results from any defect in Government-furnished material or design.

(j) This warranty shall not limit the Government's rights under the Inspection and Acceptance clause of this contract with respect to latent defects, gross mistakes, or fraud.

(End of Clause)

52.248-4003 VALUE ENGINEERING AFTER AWARD

54 In reference to Contract Clause 52.248-3, "Value Engineering – Construction", the Government may refuse to entertain a "Value Engineering Change Proposal" (VECP) for those "performance oriented" aspects of the Solicitation documents which were addressed in the Contractor's accepted contract proposal and which were evaluated in competition with other offerors for award of this contract.

55 The Government may consider a VECP for those "prescriptive" aspects of the Solicitation documents, not addressed in the Contractor's accepted contract proposal or addressed but evaluated only for minimum conformance with the Solicitation requirements.

56 For purposes of this clause, the term "performance oriented" refers to those aspects of the design criteria or other contract requirements which allow the Offeror or Contractor certain latitude, choice of and flexibility to propose in its accepted contract offer a choice of design, technical approach, design solution, construction approach or other approach to fulfil the contract requirements. Such requirements generally tend to be expressed in terms of functions to be performed, performance required or essential physical characteristics, without dictating a specific process or specific design solution for achieving the desired result.

57 In contrast, for purposes of this clause, the term "prescriptive" refers to those aspects of the design criteria or other Solicitation requirements wherein the Government expressed the design solution or other requirements in terms of specific materials, approaches, systems and/or processes to be used. Prescriptive aspects typically allow the Offerors little or no freedom in the choice of design approach, materials, fabrication techniques, methods of installation or other approach to fulfill the contract requirements.

(End of Clause)

52.249-4001 TIME EXTENSIONS FOR UNUSUALLY SEVERE WEATHER (APR 1991 OCE)
(Ref. FAR 52.249-10)

(a) This provision specifies the procedure for the determination of time extensions for unusually severe weather in accordance with the contract clause entitled DEFAULT (FIXED-PRICE CONSTRUCTION). In order for the Contracting Officer to award a time extension under this clause, the following conditions must be satisfied:

(1) The weather experienced at the project site during the contract period must be found to be unusually severe, that is, more severe than the adverse weather anticipated for the project location during any given month.

(2) The unusually severe weather must actually cause a delay to the completion of the project. The delay must be beyond the control and without the fault or negligence of the Contractor.

(b) The following schedule of monthly anticipated adverse weather delays is based on National Oceanic and Atmospheric Administration (NOAA) or similar data for the project location and will constitute the base line for monthly weather time evaluations. The Contractor's progress schedule must reflect these anticipated adverse weather delays in all weather dependent activities.

MONTHLY ANTICIPATED ADVERSE WEATHER DELAY
WORKDAYS BASED ON 5-DAY WORK WEEK

JAN	FEB	MAR	APR	MAY	JUN	JUL	AUG	SEP	OCT	NOV	DEC
9	8	6	4	4	7	8	7	5	3	4	8

(c) Upon acknowledgment of the Notice to Proceed and continuing through-out the contract, the Contractor will record on the daily Contractor Quality Control report the occurrence of adverse weather and resultant impact to normally scheduled work. Actual adverse weather delay days must prevent work on critical activities for 50 percent or more of the Contractor's scheduled workday. The number of actual adverse weather delay days shall include days impacted by actual adverse weather (even if adverse weather occurred in previous month), be calculated chronologically from the first to the last day in each month, and be recorded as full days. If the number of actual adverse weather delay days exceeds the number of days anticipated in paragraph (b) above, the Contracting Officer will convert any qualifying delays to calendar days, giving full consideration for equivalent fair weather workdays, and issue a modification in accordance with the contract clause entitled DEFAULT (FIXED PRICE CONSTRUCTION).

(End of clause)

52.249-5000 BASIS FOR SETTLEMENT OF PROPOSALS - EFARS

Actual costs will be used to determine equipment costs for a settlement proposal submitted on the total cost basis under FAR 49.206-2(b). In evaluating a terminations settlement proposal using the total cost basis, the following principles will be applied to determine allowable equipment costs:

Actual costs for each piece of equipment, or groups of similar serial or series equipment, need not be available in the contractor's accounting records to determine total actual equipment costs. If equipment costs have been allocated to a contract using predetermined rates , those charges will be adjusted to actual costs.

(3) Recorded job costs adjusted for unallowable expenses will be used to determine equipment operating expenses.

(4) Ownership costs (depreciation) will be determined using the contractor's depreciation schedule (subject to the provisions of FAR 31.205-11).

(5) License, taxes, storage and insurance costs are normally recovered as an indirect expense and unless the contractor charges these costs directly to contracts, they will be recovered through the indirect expense rate.

(End of Clause)

ATTACHMENT 1 TO SECTION 00800

LIST OF ATTACHMENTS

1. Contract Drawings:

   File No. 211-159-03, Sheets 1 through 19

2. Rates of Wages:

3. Formats:

   Project Sign

   Corps of Engineers Logo

   Accident Prevention Plan (Ref. FAR 52.236-13 and EM 385-1-1)

   Construction Quality Control Report

   Small and Disadvantaged Business Subcontracting Plan

   Weekly Temporary Electrical Inspection

4. Minimum Standard for Temporary Electrical Service (Ref. FAR 52.236-14)

5. Forms:

   SAS Form 9 - Activity Hazard Analysis

   SAD Form 1666a-R - Safety Checklist for Crawler, Truck & Wheel Mounted Cranes

   SAD Form 1666b-R - Safety Checklist for Portal, Tower, and Pillar Cranes

   SAD Form 1666c-R - Safety Checklist for Rigging

   SAD Form 1666d-R - Safety Checklist for Motor Vehicles, Trailers and Trucks

   SAD Form 1666e-R - Safety Checklist for Crawler Tractors and Dozers

   SAD Form 1666f-R - Safety Checklist for Scrapers, Motor Graders, and Other Mobile Equipment

   SAD Form 1666g-R - Safety Checklist for Material Hoists

   SAD Form 1666h-R - Safety Checklist for Earth Drilling Equipment

   ENG Form 4025 - Transmittal of Shop Drawings, Equipment Data, Material Samples, or Manufacturer's Certificates of Compliance

   DA Form 5418-R - Cost Estimate Analysis

   DD Form 1354 - Transfer and Acceptance of Military Real Property

   Standard Form LLL-A - Disclosure of Lobbying Activities

   Real Property Inventory

*3 <u>Pre-proposal Conference Minutes</u>

General Decision Number GA020023

General Decision Number GA020023
Superseded General Decision No. GA010023
State: **Georgia**
Construction Type:
BUILDING
County(ies):
HOUSTON
BUILDING CONSTRUCTION PROJECTS (does not include residential construction consisting of single family homes and apartments up to and including 4 stories)

Modification Number	Publication Date
0	03/01/2002
1	02/28/2003

COUNTY(ies):
HOUSTON

* BOIL0026A 01/01/2003

	Rates	Fringes
BOILERMAKER	25.30	11.29

SUGA1007A 01/01/1984

	Rates	Fringes
BRICKLAYER	8.69	
CARPENTER	8.67	
CEMENT MASON	7.15	
ELECTRICIAN	12.15	1.62
GLAZIER	7.38	
HEAT AND FROST INSULATOR/ASBESTOS WORKER	10.15	1.25
IRONWORKER	9.25	1.29
LABORER	5.15	
LATHER	11.00	
MILLWRIGHT	8.50	
PAINTER	6.10	.95
PLASTERER	10.00	
PLUMBER AND PIPEFITTER	10.96	
POWER EQUIPMENT OPERATORS:		
Backhoe	8.88	1.07
Crane	9.44	
Fork lift	7.33	
Front end loader	7.61	1.07
Grader	5.50	
Paver	5.50	
Tractor	5.15	
ROOFER	6.98	
SHEET METAL WORKER	8.35	
SOFT FLOOR LAYER	6.97	
TILE SETTER	7.86	
TRUCK DRIVER	5.15	

WELDERS - Receive rate prescribed for craft performing operation to which welding is incidental.

Unlisted classifications needed for work not included within

the scope of the classifications listed may be added after award only as provided in the labor standards contract clauses (29 CFR 5.5(a)(1)(ii)).

In the listing above, the "SU" designation means that rates listed under that identifier do not reflect collectively bargained wage and fringe benefit rates. Other designations indicate unions whose rates have been determined to be prevailing.

WAGE DETERMINATION APPEALS PROCESS

1.) Has there been an initial decision in the matter? This can be:

* an existing published wage determination
* a survey underlying a wage determination
* a Wage and Hour Division letter setting forth a position on a wage determination matter
* a conformance (additional classification and rate) ruling

On survey related matters, initial contact, including requests for summaries of surveys, should be with the Wage and Hour Regional Office for the area in which the survey was conducted because those Regional Offices have responsibility for the Davis-Bacon survey program. If the response from this initial contact is not satisfactory, then the process described in 2.) and 3.) should be followed.

With regard to any other matter not yet ripe for the formal process described here, initial contact should be with the Branch of Construction Wage Determinations. Write to:

Branch of Construction Wage Determinations
Wage and Hour Division
U. S. Department of Labor
200 Constitution Avenue, N. W.
Washington, D. C. 20210

2.) If the answer to the question in 1.) is yes, then an interested party (those affected by the action) can request review and reconsideration from the Wage and Hour Administrator (See 29 CFR Part 1.8 and 29 CFR Part 7). Write to:

Wage and Hour Administrator
U.S. Department of Labor
200 Constitution Avenue, N. W.
Washington, D. C. 20210

The request should be accompanied by a full statement of the interested party's position and by any information (wage payment data, project description, area practice material, etc.) that the requestor considers relevant to the issue.

3.) If the decision of the Administrator is not favorable, an interested party may appeal directly to the Administrative Review Board (formerly the Wage Appeals Board). Write to:

Administrative Review Board
U. S. Department of Labor
200 Constitution Avenue, N. W.
Washington, D. C. 20210

4.) All decisions by the Administrative Review Board are final.

END OF GENERAL DECISION

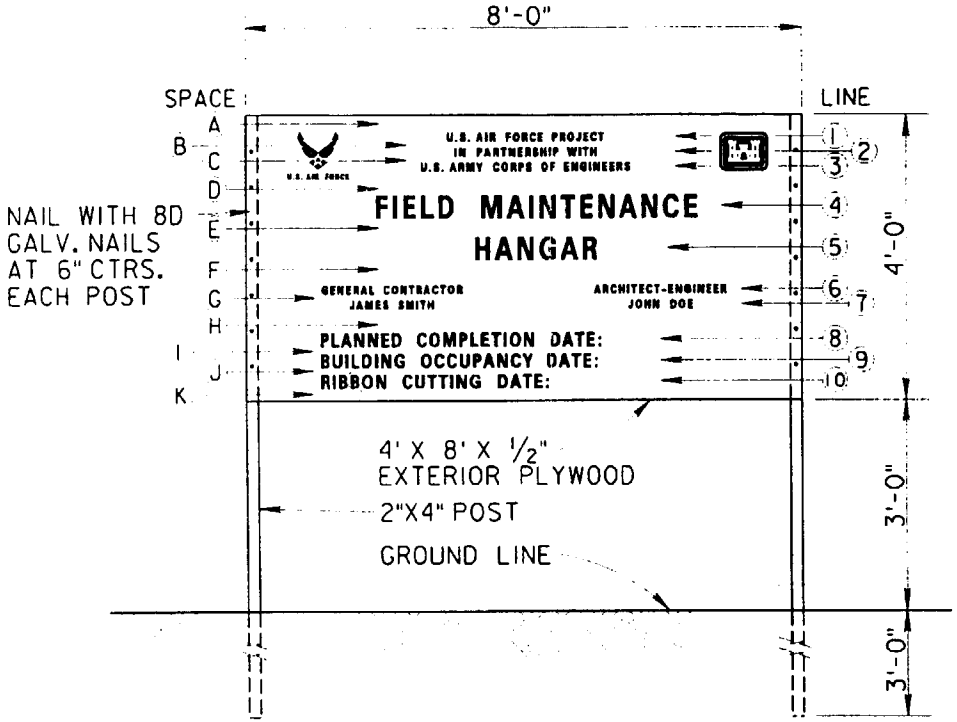

FRONT VIEW

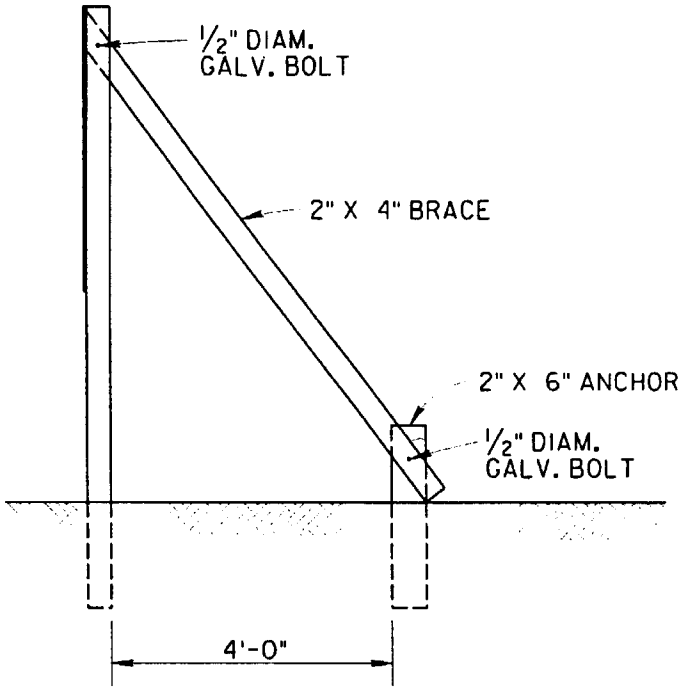

END VIEW

U.S. AIR FORCE PROJECT SIGN DETAILS

NOTES:

1. POSTS SHALL BE S4S.
2. PLYWOOD SHALL BE EXTERIOR TYPE, A-C GRADE.
3. BEFORE PAINTING, SURFACE SHALL BE CLEAN, DRY, FREE OF GREASE AND SANDED.
4. PAINT WITH ONE EXTERIOR OIL PRIME COAT AND EXTERIOR TYPE ALKYD, CONFORMING TO MASTER PAINTERS INSTITUTE MPI-9, MPI GLOSS LEVEL 6. COLOR SHALL MATCH SHERWIN WILLIAMS SW 2175.
5. ALL LETTERING SHALL BE EXTERIOR TYPE ALKYD. COLOR SHALL MATCH SHERWIN WILLIAMS SW 1900.
6. DECALOMANIA FOR CORPS OF ENGINEERS INSIGNIA AND U.S. AIR FORCE EMBLEM WILL BE FURNISHED BY THE CONTRACTING OFFICER FOR INSTALLATION BY THE CONTRACTOR.
7. ALL EXPOSED WOOD (POSTS, SUPPORTS, BACK, ETC.) SHALL BE PAINTED THE SAME BACKGROUND COLOR AS THE SIGN.
8. LETTERING STYLE SHALL BE EITHER HELIOS EXTRA BOLD CONDENSED, HELIOS BOLD II, HELVETICA BLACK ROMAN, OR HELVETICA BOLD ROMAN.

SCHEDULE

SPACE	HEIGHT	LINE	DESCRIPTION	LETTER HEIGHT	STROKE
A	3"	1	U.S. AIR FORCE PROJECT	1.5"	3/16"
B	1"	2	IN PARTNERSHIP WITH	1.5"	3/16"
C	1"	3	U.S. ARMY CORPS OF ENGINEERS	1.5"	3/16"
D	4"	4	PROJECT NAME	4"	1/2"
E	3"	5	PROJECT NAME CONT'D (IF REQ'D)	4"	1/2"
F	4"	6	GENERAL CONTRACTOR/A-E	1.5"	3/16"
G	1"	7	GENERAL CONTRACTOR/A-E	1.5"	3/16"
H	4"	8	PLANNED COMPLETION DATE	2.5"	1/4"
I	1"	9	BUILDING OCCUPANCY DATE	2.5"	1/4"
J	1"	10	RIBBON CUTTING DATE	2.5"	1/4"
K	2"				

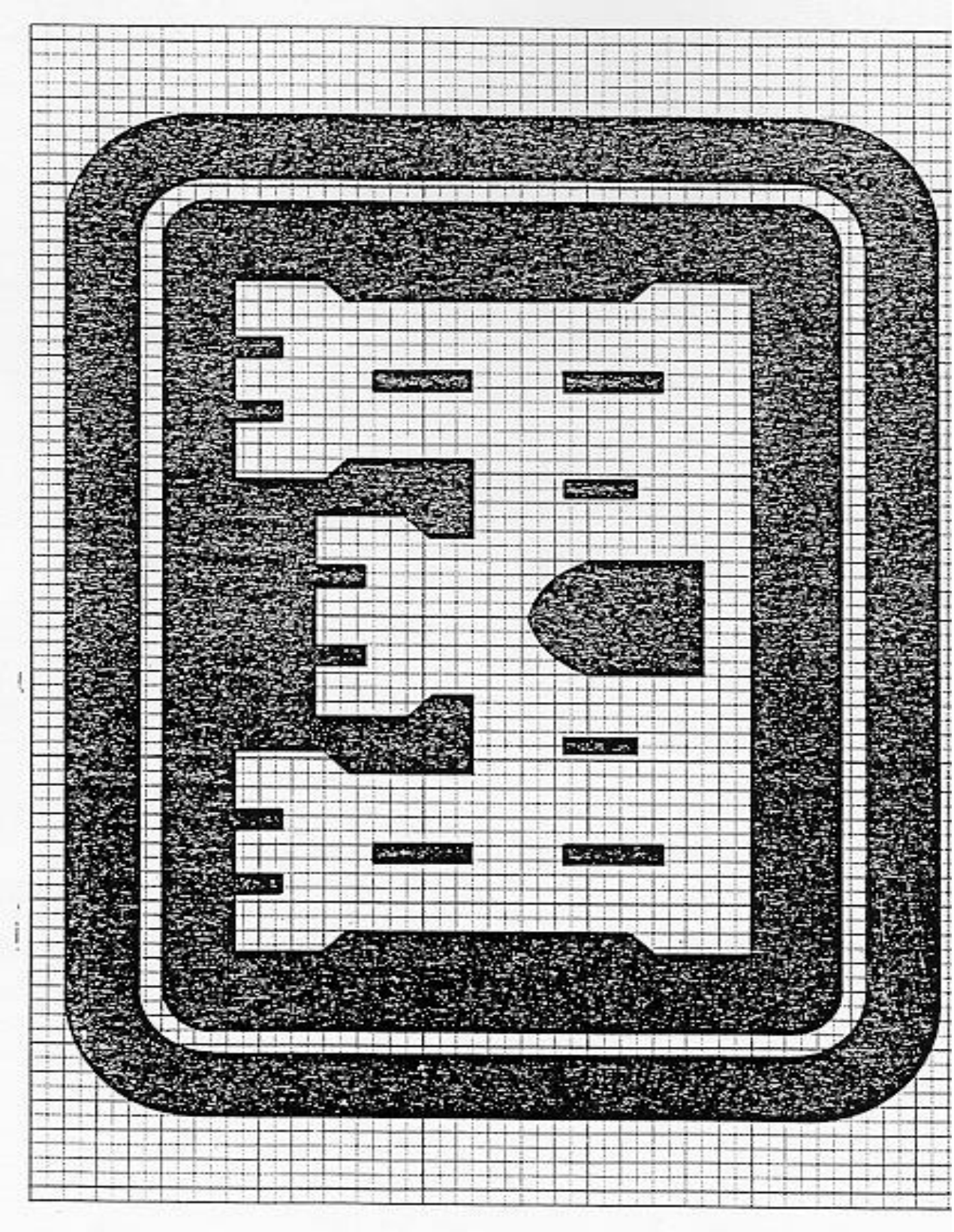

CORPS OF ENGINEERS LOGO
HALF SIZE

Last revised 9 May 97

FORMAT
(Ref. FAR 52.236-13 and EM 385-1-1 dated 3 Sep 96)
ACCIDENT PREVENTION PLAN

MINIMUM BASIC OUTLINE FOR ACCIDENT PREVENTION PLAN

An accident prevention plan is, in essence, a safety and health policy and program document. The following areas are typically addressed in an accident prevention plan, but a plan shall be job specific and shall also address any unusual or unique aspects of the project or activity for which it is written. The accident prevention plan shall interface with the employer's overall safety and health program. Any portions of the overall safety and health program that are referenced in the accident prevention plan shall be included as appropriate.

1. SIGNATURE SHEET. Title, signature, and phone number of the following:

a. Plan preparer (corporate safety staff person, QC);

b. Plan approval, e.g., owner, company president, regional vice president (HTRW activities require approval of a Certified Industrial Hygienist (or qualified Industrial Hygiene personnel for in-house USACE activities; a Certified Safety Professional (or qualified USACE safety personnel for in-house work) may approve the plan for operations involving UST removal where contaminants are known to be petroleum, oils, or lubricants);

c. Plan concurrence (provide concurrence of other applicable corporate and project personnel (contractor)), e.g., Corporate Chief of Operations, Corporate Chief of Safety, Corporate Industrial Hygienist, project manager or superintendent, project safety professional, project QC. The plan will be developed by qualified personnel (plan preparer) and will be signed by a competent person (plan concurrence) and a representative of the prime contractor's project management team (plan approval).

2. BACKGROUND INFORMATION. List the following:

a. Contractor;

b. Contract number;

c. Project name;

d. Brief project description, description of work to be performed, and location (map);

e. Contractor accident experience (provide information such as EMR, OSHA 200 Forms, corporate safety trend analyses);

f. Listing of phases of work and hazardous activities requiring activity hazards analyses.

3. STATEMENT OF SAFETY AND HEALTH POLICY. (In addition to the corporate policy statement, a copy of the corporate safety program may provide a

significant portion of the information required by the accident prevention plan.)

4. RESPONSIBILITIES AND LINES OF AUTHORITIES.

a. Identification and accountability of personnel responsible for safety - at both corporate and project level (contracts specifically requiring safety or industrial hygiene personnel should include a copy of their resume - the District Safety and Occupational Health Office will review the qualifications for acceptance). For items in EM 385-1-1 which require the use of a competent person or a qualified person, the contractor is to maintain documentation demonstrating the competence or qualification of that individual.

b. Lines of authority

5. SUBCONTRACTORS AND SUPPLIERS. Provide the following:

a. Identification of subcontractors and suppliers (if known);

b. Means for controlling and coordinating subcontractors and suppliers;

c. Safety responsibilities of subcontractors and suppliers.

6. TRAINING.

a. List subjects to be discussed with employees in safety indoctrination.

b. List mandatory training and certifications which are applicable to this project (e. g., explosive actuated tools, confined space entry, crane operator, diver, vehicle operator, HAZWOPER training and certification, personal protective equipment) and any requirements for periodic retraining/recertification.

c. Identify requirements for emergency response training.

d. Outline requirements (who attends, when given, who will conduct etc.) for supervisory and employee safety meetings.

e. Identify location at the project site where the records will be maintained.

7. SAFETY AND HEALTH INSPECTIONS. Provide details on:

a. Who will conduct safety inspections (e.g., project manager, safety professional, QC, supervisors, employees, etc.), when inspections will be conducted, how the inspections will be recorded, deficiency tracking system, follow-up procedures, etc;

b. Any external inspections/certifications which may be required (e.g., Coast Guard).

8. SAFETY AND HEALTH EXPECTATIONS, INCENTIVE PROGRAMS, AND COMPLIANCE.

a. The company's written safety program goals, objectives, and accident experience goals for this contract should be provided.

b. A brief description of the company's safety incentive programs (if any) should be provided.

c. Policies and procedures regarding noncompliance with safety requirements (to include disciplinary actions for violation of safety requirements) should be identified.

d. Provide written company procedures for holding managers and supervisors accountable for safety.

9. ACCIDENT REPORTING. The contractor shall identify who shall complete the following, how, and when:

a. Exposure data (man-hours worked);

b. Accident investigations, reports and logs;

c. Immediate notification of major accidents.

10. MEDICAL SUPPORT. Outline on-site medical support and off-site medical arrangements.

11. PERSONAL PROTECTIVE EQUIPMENT. Outline procedures (who, when, how) for conducting hazard assessments and written certifications for use of personal protective equipment.

12. PLANS (PROGRAMS, PROCEDURES) REQUIRED BY THE SAFETY MANUAL (as applicable).

a. Hazard communication program (01.B.04);

b. Emergency response plans:
- procedures and tests (01.E.01)
- spill plans (01.E.01, 06.A.02)
- fire fighting plan (01.E.01, 19.A.04)
- posting of emergency telephone numbers (01.E.04)
- wildfire prevention plan (09.K.01)
- man overboard/abandon ship (19.A.04)

c. Layout plans (04.A.01);

d. Respiratory protection plan (05.E.01);

e. Health hazard control program (06.A.02);

f. Lead abatement plan (06.B.05 & specifications);

g. Asbestos abatement plan (06.B.05 & specifications);

h. Abrasive blasting (06.H.01);

i. Confined space (06.1);

j. Hazardous energy control plan (12.A.07);

k. Critical lift procedures (16.C.17);

l. Contingency plan for severe weather (19.A.03);

m. Access and haul road plan (22.1.10);

n. Demolition plan (engineering and asbestos surveys) (23.A.01);

o. Emergency rescue (tunneling) (26.A.05);

p. Underground construction fire prevention and protection plan (26.D.01);

q. Compressed air plan (26.1.01);

r. Formwork and shoring erection and removal plans (27.B.02);

s. Lift slab plans (27.D.01);

t. SHP and SSHP (for HTRW work an SSHP must be submitted and shall contain all information required by the accident prevention plan - two documents are not required (28.B.01);

u. Blasting plan (29.A.01);

v. Diving plan (30.A.13);

w. Plan for prevention of alcohol and drug abuse (Defense Federal Acquisition Regulation Supplement Subpart 252.223-7004, Drug-Free Work Force).

13. The Contractor shall provide information on how they will meet the requirements of major sections of EM 385-1-1 in the accident prevention plan. Particular attention shall be paid to excavations, scaffolding, medical and first aid requirements, sanitation, personal protective equipment, fire prevention, machinery and mechanized equipment, electrical safety, public safety requirements, and chemical, physical agent, and biological occupational exposure prevention requirements. Detailed site-specific hazards and controls shall be provided in the activity hazard analysis for each phase of the operation. Site-specific hazards are those hazards which would be reasonably be anticipated to occur on the construction site of concern and will be identified through analysis of the activities to be performed. The controls are measures which will be implemented by the contractor to eliminate or reduce each hazard to an acceptable level.

F O R M A T

CONTRACTOR'S NAME
(Address)

CONSTRUCTION QUALITY CONTROL REPORT

Date: _____ Report No. _____

Contract No.: _____

Description and Location of Work: _____

WEATHER: (Clear)(P. Cloudy)(Cloudy); Temperature:___Min,___Max;
Rainfall ___Inches

Contractor/Subcontractors and Area of Responsibility
a._____
b._____
c._____
d._____
e._____
f._____
g._____
h._____

1. Work Performed Today:

(Indicate location and description of work performed. Refer to work performed by prime and/or subcontractors by letter in table above.)

_____

2. Results of Control Activities:

(Indicate whether: P-Preparatory, I-Initial, or F-Followup and include satisfactory work completed or deficiencies with action to be taken.)

_____

3. Test Required by Plans and/or Specifications Performed and Results of Tests:

_____

4. Monitoring of Materials and Equipment:

---

5. Offsite Surveillance Activities:

---

6. Job Safety:

(Daily comment required.)

---

7. Remarks:

a. (Cover any conflicts in plans, specifications or instructions.)

b. (Action taken in review of submittal.)

c. (Verbal instructions received.)

_____
Inspector

CONTRACTOR'S VERIFICATION:

The above report is complete and correct and all material and equipment used and work performed during this reporting period are in compliance with the contract plans and specifications except as noted above.

_____
Contractor's Approved
Authorized Representative

SAMPLE

SMALL AND DISADVANTAGED BUSINESS SUBCONTRACTING PLAN

BETTER BUILDERS, INC.

DATE: February 11, 2003

SOLICITATION NO. DACA21-0X-X-XXXX

TITLE: Barracks Complex, Fort Swampy, Georgia

Type of Work: Design and Construction

In accordance with applicable contract clauses of the solicitation noted above, Better Builders, Inc. submits the following Small Business Subcontracting Plan (includes small, veteran-owned small business, service-disabled veteran-owned small business, HUBZone small business, small disadvantaged business, and women-owned small business concerns).

It is company policy to follow all public laws including P.L. 99-661, Section 1207, P.L. 100-180, Section 806, P.L. 105-135 and P.L. 106-50. We have informed all purchasers to follow these laws in hiring subcontractors and buying materials.

1. The following goals (expressed in terms of percentages of the total dollars available for subcontract/purchase order award) would be applicable to a contract awarded under the cited solicitation. You must also provide the dollar amounts for each of the goals listed below.

    a. Total Proposed Contract Amount: $26,961,000

    b. Total amount available for Subcontract award: $18,300,000

    c. Large Business: $7,832,400 – 42.8%

    d. Total amount to be subcontracted to all small business: $10,467,600 - 57.2%

    e. Small Disadvantaged Business: $1,628,700 – 8.9%

    f. Women-Owned Small Business: $1,482,300 – 8.1%

    g. Service-Disabled Veteran-Owned Small Business: $549,000 - 3%

    h. HUBZone Small Business: $549,000 – 3%

i. There are no options in this solicitation. ***(NOTE: If there are options in the solicitation you must provide the same information as listed in paragraph 1 a-h for each option year/period.)***

j. Indirect and overhead costs have not been included in the goals specified in this section for amounts available for subcontract/purchase order award.

k. Consideration was given to HCBU/MI's but no opportunities were found to be included in the small disadvantaged business goals.

NOTE: While Savannah District does not have a specific goal for subcontracting with Veteran-Owned small business, it must be addressed in any subcontracting plan. However, FAR 52.219-9 requires a goal in your subcontracting plan for Veteran-Owned small business concerns.

2. The following principal products and/or services will be subcontracted under this contract, and the distribution among all small business concerns are as follows:

Large Business - Earthwork
Small Business - Windows and Storm Doors, Recreation, Site Utilities Plumbing
Veteran Owned Small Business – Materials, Equipment
Service Disabled Veteran Owned Small Business – Asphalt, Electrical, Doors
HUBZone Small Business - Window Treatment, HVAC, Concrete
Small Disadvantaged Business - Vinyl Siding, Insulation, Gutters
Women Owned Small Business – Carpentry, Ceramic Tile, Fencing

NOTE: Company names should be provided for each product and/or service listed.

The following method was used in developing our subcontracting goals: (1) all areas of potential subcontract work were determined to be available for subcontract award to all types of small business concerns, and (2) will be actively recruited for participation through the many sources described hereinafter.

3. The following individual will administer this Subcontract Plan on behalf of Better Builders, Inc.:

Name: Freddie Better Title: Executive Vice President

Address and Telephone Number: 4845 Tonka Drive
Fair Haven, CT 27413
800-621-4845

The individual's specific duties with regard to the conduct of our firm's Subcontracting Plan will include, but will not be limited to the following:

a. Developing and maintaining bidders lists of all types of small business concerns using sources such as the Pronet System developed by the Small Business Administration, the Minority Business Development Agency of the U.S. Department of Commerce, Local Minority Business Development Centers and Minority Contractor Associations, and the General Business Services Center in the project's Standard Metropolitan Statistical Area.

b. Assuring the inclusion of all types of small business concerns in all solicitations for products or services which they are capable of providing; and ensuring that all solicitations are structured to permit the maximum possible participation by all types of small business concerns.

c. Establishing and maintaining records of all solicitations and subcontract awards to all types of small business concerns to ensure that the members of the firm who review bidders proposals document their reasons for selecting or not selecting a bid.

d. Preparing and submitting the Subcontracting Report for Individual Contracts (SF 294) and the Summary Subcontract Report (SF 295) in accordance with the instructions provided on the forms, and coordinating and preparing for all compliance reviews by Federal agencies.

e. Conducting or arranging for all other activities necessary to further the intent and attainment of goals of the Plan to include motivational training of the firm's purchasing personnel attendance at workshop, seminars and trade fairs conducted by or on behalf of all types of small business concerns, and general cooperation with members of these concerns or their representatives.

4. The following steps will be taken to ensure that all types of small business concerns receive notice and have an equitable opportunity to compete for intended awards of subcontracts and/or purchase orders for the products and/or services described in paragraph 2 above:

a. Sources will be requested through the SBA's ProNet system, business development organizations, small business trade associations and at small business procurement conferences; sources will be contacted and bidding materials will be provided to all respond ing parties with interest.

b. Internally, motivational training will be conducted to guide and encourage purchasing personnel; source lists and guides to all types of small business concerns will be maintained and utilized by purchasing personnel while soliciting subcontracts and purchase orders; activities will be monitored to ensure sufficient time is allowed for interested bidders to prepare their bids and to evaluate continuing compliance with this Subcontracting Plan.

5. Better Builders, Inc. agrees that the clause entitled "Utilization of Small Business Concerns" will be included in all subcontracts which offer further subcontracting opportunities. All subcontractors, except small business concerns, who receive subcontracts in excess of $500,000 ($1,000,000 in the case of construction) will be required to adopt and comply with a subcontracting plan similar to this one. Such plans will be reviewed to assure that all minimum requirements of an acceptable subcontracting plan have been satisfied.

The acceptability of goals shall be determined on a case-by-case basis depending on the supplies/services involved, the availability of all potential small business and prior experience. Once approved and implemented, plans will be monitored through the submission of periodic reports or, as time and availability of funds permit, periodic visits to subcontractor's facilities to review applicable records and subcontracting program progress.

6. Better Builders, Inc. agrees to submit such periodic reports and cooperate in any studies or surveys as may be required by the Contracting agency or the Small Business Administration in order to determine the extent of compliance by the offeror with the subcontracting plan and with the clause entitled "Utilization of Small Business Concerns" contained in the solicitation.

7. Better Builders, Inc. agrees to maintain at least the following types of records to document compliance with this Subcontracting Plan:

a. The names of all organizations, agencies, and associations contacted for all small business sources, along with records of attendance at conferences, seminars and trade fairs where additional sources were developed.

b. Source lists, guides, and other data identifying all types of small business concerns

c. Records on all subcontract solicitations, on a contract-by-contract basis, indicating (1) whether all types of small business concerns were solicited, and if not, why not; and (2) the reasons for the failure of all solicited small businesses to receive a subcontract award.

d. Records of all subcontract award data, to include subcontractor's name and address, to be kept on a contract-by-contract basis.

e. Minutes of internal motivational and training meetings held for the guidance and encouragement of purchasing personnel, and records of all monitoring activities performed for compliance evaluation.

f. Copies of SF 294 and SF 295 showing date and place of filing and copies of all other reports or results of reviews conducted by the contracting agency or other interested agencies of the Federal government to monitor our compliance with this Subcontracting Plan.

In closing Better Builders, Inc. states that it will be the policy of Better Builders, Inc. to afford every practicable opportunity to all types of small business concerns to participate in construction contracts awarded to Better Builders, Inc. by the Federal Government to ensure that equitable opportunity is provided to all types of small business concerns to compete for award of subcontracts and purchase orders, and to diligently pursue the achievement of our goals by participation of all types of small business concerns in the dollars available for subcontract/purchase order award under the solicitation.

BY_____ DATE _____

_____
Signature

_____
Title, and Company Name

_____ DATE _____
Contract Specialist

Approval Recommended

_____ DATE _____
SADBU

Approve/Disapprove

_____ DATE _____
Contracting Officer

Approve/Disapprove

_____ DATE _____
Procurement Center Representative
Small Business Administration

WEEKLY TEMPORARY ELECTRICAL INSPECTION

Week ending _____

Contract No. _____

Contract Description _____

The following items were inspected in accordance with requirements in National Electrical Code and Corps of Engineers Safety and Health Requirements Manual, EM 385-1-1.

1. Wire (size, type, condition).

2. Systems and devices (polarity, continuity of ground, resistance to ground).

3. Resistance of ground rods (25 OHMS) measured and recorded.

4. Check GFI for 15/20 amp 120 volt circuits.

5. Plugs and receptacles (type, NEMA rating).

6. Circuit breakers and disconnect (size, type, weatherproof).

7. Extension cords (type, UL listed, insulation condition, splices, location).

8. Open wiring on insulators, nonmetallic sheathed cable, outside clearance (600 volts or less), Festoon lighting (as applicable).

_____

Signature Electrician/Electrical Engineer

MINIMUM STANDARD FOR TEMPORARY ELECTRICAL SERVICE

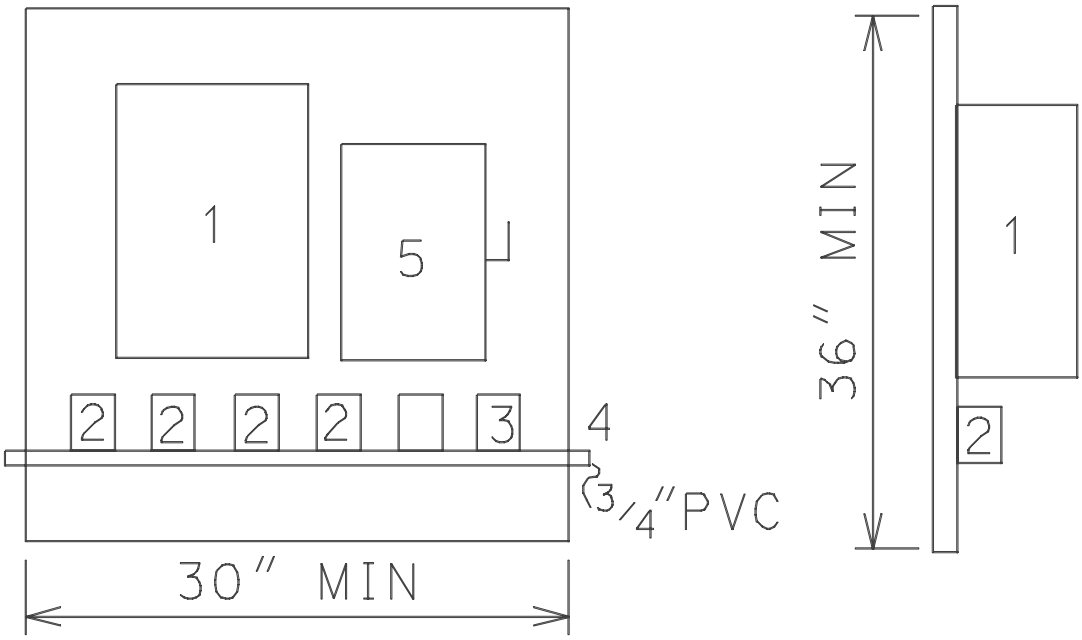

(DIMENSIONS ARE APPROXIMATE)

A. The backboard for temporary service shall consist of not less than 1/2 inch plywood of exterior grade.

B. Numbers above correspond to the item below:

Item 1 - NEMA 3R circuit breaker type panelboard. This panelboard shall consist of 1 two-pole 60 amp main circuit breaker, 4* one pole 20 AMP branch circuit breakers, and 1* two pole 20 AMP branch circuit breaker. Breakers shall meet Federal Specifications Standards for Class 1A breakers and shall be plug-in type. (*Number of breakers to be adjusted to suit the job requirements.)

Item 2 - Duplex grounding type convenience outlets in standard utility type outlet boxes with covers, meeting the NEC and NEMA requirements for wet locations. Connections to the branch circuit breakers shall be grounded by two conductors #12 NMC cable.

Item 3 – (Optional) A single three-conductor grounding type outlet rated for 250 volt service meeting the NEC and NEMA requirements for wet locations. Connections from this outlet to the two pole breaker shall be by two conductor grounded type NMC cable.

Item 4 - 3/4 inch PVC. This shall be used to support extension cords.

Item 5 – NEMA 3R service disconnect safety switch – 60 amp minimum.

C. The panelboard shall be grounded by #6 copper wire connected to a 3/4 inch by 10-foot long ground rod.

D. Service to the panel shall consist of three copper conductor #6 minimum service entrance cable. This cable may enter the top or side of the panelboard.

E. Periodic inspections of systems and devices will be made by the Contractor at intervals not to exceed 1 week, and a report will be submitted indicating the results.

F. All receptacle outlets that provide temporary electrical power during construction, remodeling, maintenance, repair, or demolition shall have ground-fault circuit-interrupter (CFCI) protection for personnel. GFCI protection shall be provided on all circuits serving portable electric hand tools or semi-portable electric power tools (such as block/brick saws, table saws, air compressors, welding machines, and drill presses). See EM 385-1-1 for exceptions.

G. Per EM 385-1-1 all temporary power distribution systems shall be submitted to the field office before installation.

ACTIVITY HAZARD ANALYSIS

1. Phase of Construction		
2. Location	3. Contract No.	4. Project
5. Prime Contractor	6. Date of Preparatory	7. Estimated Start Date
Potential Safety Hazard	Procedure to Control Hazard	
8. Contractor's Representative (signature)	9.	

SAS Form 9
1 Jan 82

SAFETY CHECKLIST FOR CRAWLER, TRUCK & WHEEL MOUNTED CRANES

Contract # and title:	
Equipment name & number: owned or leased?	
Contractor:	Subcontractor:
Contract Inspector:	Date inspected:

	Yes	No	N/A
1. Unless the manufacture has specified an on-rubber rating, outriggers will be fully extended and down? (16.D.10)			
2. Are lattice boom cranes equipped with a boom angle indicator, load indicating device, or a load moment indicator? (16.D.01)			
3. Are lattice boom and hydraulic cranes equipped with a means for the operator to visually determine levelness? (16.D.02)			
4. Are lattice boom and hydraulic cranes, except articulating booms cranes, equipped with drum rotation indicators located for use for the operator? (16.D.03)			
5. Are lattice boom and hydraulic mobile cranes equipped with a boom angle or radius indicator within the operator’s view? (16.D.04)			
6. Are lattice boom cranes, with exception of duty cycle cranes, equipped with an anti-two blocking device? (16.D.05)			
7. When duty cycle machines are required to make a non-duty lift, is the crane equipped with an international orange warning device and is a signal person present? (16.D 05)			
8. Are the following with the crane at all times: (16.C.02) a. the manufacturer’s operating manual? b. the load rating chart? c. the crane’s log book documenting use, maintenance, inspections and tests? d. operating manual for crane operator aids used on the crane.			

	Yes	No	N/A
9. Are the following on the project site: a. completed periodic inspection report prior to initial work? (16.C.12) b. pre-operational checklist used for daily inspection? (16.C.12) c. written reports of the operational performance test? (16.C.13) d. written reports of the load performance test? (16.C.13)			
10. Are all operators physically qualified to perform work? (16.C.05)			
11. Are all operators qualified by written and practical exam or by appropriate licensing agency for the type crane they are to operate? (16.C.05)			
12. Is the crane designed and constructed IAW the standards listed in Table 16-1? (16.C.06)			
13. Is a hazard analysis for set-up and set-down available? (16.C.08)			
14. Are accessible areas within the swing radius of the rear of the crane barricaded? (16.C.09)			
15. Are there at least 3 wraps of cable on the drum? (16.C.10)			
16. Are the hoisting ropes installed IAW the manufacturer’s recommendations? (16.C.10)			
17. Are critical lift plans available? (16.C.18)			
18. Are minimum clearance distance for high voltage lines posted at the operator’s position? (11.E.04)			
19. Do older lattice boom cranes with anti-two block warning devices in lieu of anti-two block prevention devices have a written exemption? (16.D.05)			
20. Is the slow moving emblem used on all vehicles which by design move at 25 MPH or less on public roads? (08.A.04)			
21. Are all vehicles which will be parked or moving slower than normal traffic on haul roads equipped with a yellow flashing light or flasher visible from all directions? (16.A.13)			

	Yes	No	N/A
22. Is all equipment to be operated on public roads provided with: (16A.07) a. headlights? b. brake lights? c. taillights? d. back-up lights? e. front and rear turn signals?			
23. Are seat and seat belts provided for the operator and each rider on equipment? (16.A.07 and 16.B.08)			
24. Is all equipment with windshields equipped with powered wipers and defogging or defrosting devices? (16.A.07)			
25. Is the glass in the windshield or other windows clear and unbroken to provide adequate protection and visiblity for the operator? (16.A.07, 16.B.10)			
26. Is all equipment equipped with adequate service brake system and emergency brake system? (16.A.18)			
27. Are areas on equipment where employees walk or climb equipped with platforms, footwalks, steps, handholds, guardrails, toeboards and non-slip surfaces? (16.B.03)			
28. Is all self propelled equipment equipped with automatic, audible, reverse signal alarms? (16.B.01)			
29. Is there a record of manufacturer’s approval of any modification of equipment which affects its capacity or safe operation? (16.A.18)			
30. Are truck and crawler cranes attached to a barge or pontoon by a slack tiedown system? (16.F.06)			
31. Have the following conditions been met for land cranes mounted on barges or pontoons: (16.F.04) a. Have load ratings been modified to reflect the increased loading from list, trim, wave, and wind action? b. Are all deck surfaces above the water? c. Is the entire bottom area of the barge or pontoon submerged? d. Are tie downs available? e. Are cranes blocked and secured?			
32. Are all belts, gears, shafts, spindles, drums, flywheels, or other rotating parts of equipment guarded where is a potential for exposure to workers? (16.B.03)			

	Yes	No	N/A
33. Is the area where the crane is to work level, firm and secured? (16.A.10)			
34. Is a dry chemical or carbon dioxide fire extinguisher rated at least 5-B:C on the crane? (16.A.26)			
35. Are trucks, for truck mounted cranes, equipped with a working reverse signal alarm? (16.B.01)			
36. Is a signal person provided where there is danger from swinging loads, buckets, booms, etc.? (16.B.13)			
37. Is there adequate clearance from overhead structures and electrical sources for the crane to be operated safely? (16.C.09)			
38. Is there adequate lighting for night operations? (16.C.19)			
39. Has the the boom stop test on cable-supported booms been performed? (16.D.06)			
40. Is the boom disenaging device functioning as required? (16.D.06)			
41. Has all rigging and wire rope been inspected? (Section 15)			
Remarks:(Enter actions taken for all “no” answers.)			
Contractor inspector signature			
Contractor QC/safety officer/project manager signature			

SAFETY CHECKLIST FOR PORTAL, TOWER, AND PILLAR CRANES

Contract # and Title:			
Equipment name & number: owned or leased?			
Contractor:	Subcontractor:		
Contract Inspector:	Date Inspected:		
	Yes	No	N/A
1. Are the following available: (16.E.02) a. written erection instructions? b. listing of the weight of each component? c. an activity hazard analysis for the erection? d. does the activity hazard analysis contain (1.) location of crane and adjacent structures? (2.) foundation design and construction requirements? (3.) clearance and bracing requirements?			
2. Is there a boom angle indicator within the operator's view? (16.E.04)			
3. Are luffing jib cranes equipped with: (16.E.05) a. shock absorbing jib stops? b. jib hoist limit switch? c. jib angle indicator visible to operator?			
4. If used, do rail clamps have slack between the point of attachment to the rail and the end fastened to the crane? (16E.06)			
5. Are the following with the crane at all times: (16.C.02) a. the manufacturer's operating manual? b. the load rating chart? c. the crane's log book documenting use, maintenance, inspections and tests? d. the operating manual for crane operational aids used on the crane?			

	Yes	No	N/A
6. Are the following on the project site: a. completed periodic inspection report prior to initial work? (16.C.12) b. pre-operational checklist used for daily inspections? (16.C.12) c. written reports of the operational performance tests? (16.C.13) d. written reports of the load performance tests? (16.C.13)			
7. Is every crane operator certified by a physician to be physically qualified to perform work? (16.C.05)			
8. Are all operators qualified by written and practical exam or by appropriate licensing agency for the type crane they are to operate? (16.C.05)			
9. Is the crane designed and constructed IAW the standards listed in Table 16-1? (16.C.05)			
10. Is a hazard analysis for set-up and set-down available? (16.C.08)			
11. Are there at least 3 wraps of cable on the drum? (16.C.10)			
12. Are the hoisting ropes installed IAW the manufacturer’s recommendations? (16.C.10)			
13. Is the a record of manufacturer’s approval of any modification of equipment which affects its capacity or safe operation? (16.A.07)			
5. Remarks: (Enter actions taken)			
Contractor inspector signature			
Contractor QC/safety officer/project manager signature			

SAFETY CHECKLIST FOR RIGGING

Contract # and title:			
Equipment name & number: owned or leased?			
Contractor	Subcontractor:		
Contractor inspector:	Date inspected:		
	Yes	No	N/A
1. Has all defective rigging been removed? (15.A.01)			
2. Is rigging stored properly? (15.A.01)			
3. Are running lines within 6.5’ of the ground or working level guarded? (15.A.03)			
4. Are all eye splices made in an approved manner with rope thimbles? (sling eyes excepted) (15.A.04)			
5. Are positive latching devices used to secure loads? (15.A.05)			
6. Are all custom lifting accessories marked to indicate their safe working loads? (15A.07)			
7. Are all custom designed lifting accessories proof-tested to 125% of their rated load? (15.A.07)			
8. Are the following conditions met for wire rope: (15.B.01-09) a. Are they free of rust or broken wires? b. Are defective ropes cut up or marked as unusable? c. Do rope clips attached with U-bolts have the U-bolts on the dead end or short end of the rope? d. Are protruding ends of strands in splices on slings and bridles covered or blunted? e. Except for eye splices in the end of wires and for all endless wire rope slings, are all wire ropes used in hoisting, lowering, or pulling loads one continuous piece, free of knots or splices?			

	Yes	No	N/A
f. Do all eye splices have at least 5 full tucks? g. If used, are wedge sockets fastening attached without attached the dead end of the wire rope to the live rope? h. Are they free of eyes or splices formed by wire rope clips or knots?			
9. Are the following conditions met for chain? (15.C.01-04) a. Are all chains alloyed? b. Do all coupling links or other attachments have rated capacities at least equal to that of the chain. c. Are makeshift fasteners restricted from use?			
10. Are the following conditions met for fiber rope:(15.D.01-07) a. Are all ropes protected from freezing, excessive heat or corrosive materials? b. Are all ropes protected from abrasion? c. Are splices made IAW manufacture's recommendations? d. Do all eye splices in manila rope contain at least 3 full tucks and do all short splices contain at least 6 full tucks(3 on each side of the centerline of the splice)? e. Do all splices in layed synthetic fiber rope contain at least 4 full tucks and do short splices contain at least 8 full tucks (4 on each side of the centerline of the splice)? f. Do the tails of fiber rope splices extend at least 6 rope diameters (for rope 1" diameter or greater) past the last full tuck? g. Are all eye splices large enough to provide an included angle of not greater than 60* at the splice when the eye is placed over the load or support?			
11. Are the following conditions met for all slings:(15.E.01-06) a. Is protection provided between the sling and sharp surfaces? b. Do all rope slings have minimum clear length of 40 times the diameter of component ropes between each end fitting or eye splice? c. Do all braided slings have a minimum clear length of 40 times the diameter of component ropes between each end fitting or eye splice?			

	Yes	No	N/A
d. Do all welded alloy steel chain slings have affixed permanent identification stating size, grade, rated capacity and manufacturer? e. Is each synthetic web sling marked or coded to identify its manufacturer, rated capacities for each type hitch and the type material?			
12. Are drums, sheaves, and pulley smooth and free of surface defects? (15.F.01)			
13. Is the ratio of the diameter of the rigging and the drum, block sheave or pulley thread diameter such that the rigging will adjust without excessive wear, deformation, or damage? (15F.02)			
14. Have all damaged drums, sheaves and pulleys been removed from service? (15.F.04)			
15. Are all connections, fittings, fastenings, and attachments of good quality, proper size and strength, and installed IAW manufacturer's recommendations? (15.F.05)			
16. Are all shackles and hooks sized properly? (15.F.06 & .07)			
17. Are hoisting hooks rated at 10 tons or greater provided with safe handling means? (15.F.07)			
18. Do all drums have sufficient rope capacity? (15.F.08)			
19. Is the drum end of the rope anchored by a clamp securely attached to the drum in a manner approved by the manufacturer? (15.F.08)			
20. Do grooved drums have the correct groove pitch for the diameter of the rope and is the groove depth correct? (15.F.08)			
21. Do the flanges on grooved drums project beyond the last layer of rope at a distance of either 2″ or twice the diameter of the rope, whichever is greater? (15.F.08)			
22. Do the flanges on ungrooved drums project beyond the last layer of rope a distance of either 2.5″ or twice the diameter of the rope, which ever is greater.			

	Yes	No	N/A
23. Are the sheaves compatible with the size of rope used and as specified by the manufacture? (15F.09)			
24. Are sheaves properly aligned, lubricated, and in good condition? (15.F.09)			
25. When rope is subject to riding or jumping off a sheave, are sheaves equipped with cablekeepers? 915.F.09)			
26. Are eye bolts loaded in the plane of the eye and at angles less than 45* to the horizontal? (15.F.10)			
27. Remarks: (Enter actions taken for “no” answers.)			
Contractor inspector signature			
Contractor QC/safety/project manager signature			

SAFETY CHECKLIST FOR MOTOR VEHICLES , TRAILERS AND TRUCKS

Contract # and title: owned or leased?	
Equipment name & number:	
Contractor:	Subcontractor:
Contractor inspector:	Date inspected:

	Yes	No	N/A
1. Are records of safety inspections of all vehicles available? (18.A.02)			
2. Are all vehicles to be operated between sunset and sunrise equipped with: (18.A.04) a. 2 headlights? b. taillights and brake lights? c. front and back turn signals? d. 3 emergency flares, reflective markers, or equivalent portable warning devices?			
3. Are vehicles, except trailers or semi-trailers having a gross weight of 5000 lbs or less, equipped with service brakes and manually operated parking brakes? (18.A.05)			
4. Are service brakes on trailers and semitrailers controlled from the driver’s seat of the prime mover? (18A.06)			
5. Does the vehicle have: (18.A.06) a. a speedometer? b. a fuel gage? c. an audible warning device (horn)? d. a windshield & adequate windshield wiper? e. an operable defroster and defogging device? f. an adequate rearview mirror? g. a cab, cab shield, and other protection to protect the driver from the elements and falling or shifting materials? h. non-slip surfaces on steps? I. a power-operated starting device?			

	Yes	No	N/A
6. Is all the glass safety glass and is all broken or cracked glass replace? (18.A.07)			
7. Do trailers meet the following: (18A.08) a. Are all towing devices adequate for the weight drawn? b. Are all towing devices properly mounted? c. Are locking devices or a double safety system provided on every 5th wheel mechanism and tow bar arrangement to prevent accidental separation? d. Are trailers coupled with safety chains or cables to the towing vehicle? e. Are trailers equipped with the power brakes equipped with a break-away device which will lock-up the brakes in the event the trailer separates from the towing vehicle?			
8. Are all dump trucks:(18.A.10) a. equipped with a holding device to prevent accidental lowering of the body? b. equipped with a hoist lever secured to prevent accidental starting or tipping? c. equipped with means to determine (from the operator’s position) if the dump box is lowered? d. equipped with trip handles for tailgates that allow the operator to be clear?			
9. Are all buses, trucks and combination of vehicles with a carrying capacity of 1.5 tons or more, to be operated on public roads equipped with: (18.A.11) a. 3 reflective markers? b. 2 wheel chocks for each vehicle? c. at least one 2A:10B:C fire extinguisher? d. at least two properly rated fire extinguishers (for vehicles carrying flammable cargo)? e. a red flag not less than 1 foot square.			
10. Is vehicle exhaust controlled so as not to present a hazard to personnel? (18.A.13)			
11. Are all rubber tired motor vehicles equipped with fenders or with mud flaps if the vehicle is not designed for fenders? (18.A.14)			

	Yes	No	N/A
12. Are all vehicles, except buses, equipped with seat belts? (18.B.02)			
13. Does all self-propelled construction and industrial equipment have a working reverse signal alarm? (16.B.01)			
14. Are all hot surfaces of equipment, including exhaust pipes or other lines, guarded or insulated to prevent injury or fire? (16.B.03)			
15. If an off the road vehicle, is it equipped with rollover protective structures? (16.B.12)			
16. Remarks: (Enter actions taken for “no” answers)			
Contractor inspector signature			
Contractor QC/safety officer/project manager signature			

SAFETY CHECKLIST FOR CRAWLER TRACTORS AND DOZERS

Contract # and title:	
Equipment name & number: owned or leased?	
Contractor:	Subcontractor:
Contractor inspector:	Date inspected:

	Yes	No	N/A
1. Are initial and daily/shift inspection records available? (16.A.01& .02)			
2. Are only qualified operators assigned to operate mechanized equipment? (16.A.04)			
3. Are sufficient lights provided for night operations? (16.A.11)			
4. Is the unit shut down before refueling? (16.A.14)			
5. Does the unit have as a minimum a 5-B:C fire extinguisher? (16.A.26)			
6. Is there an effective, working reverse alarm? (16.B.01)			
7. Are moving parts, shafts, sprockets, belts, etc., guarded? (16.B.03 ,07, and 13)			
8. Is protections against hot surfaces, exhausts, etc., provided? (16.B.03 and .13)			
9. Are fuel tanks located in a manner to prevent spills or overflows from running onto engine exhaust or electrical equipment?			

	Yes	No	N/A
10. Are exhaust discharges directed so they do not endanger person of obstruct operator vision?(16.B.05)			
11. Are seat belts provided? (16B.08)			
12. Is protection (grills, canopies, screens) provided to shield operator from falling or flying objects? (16.B.10 and .11)			
13. Is roll over protection provided? (16.B.12)			
14. Remarks: (Enter actions taken for “no” answers)			
Contractor inspector signature			
Contractor QC/safety officer/project manager signature			

SAFETY CHECKLIST FOR SCRAPERS, MOTOR GRADERS , AND OTHER MOBILE EQUIPMENT

Contract # and title:	
Equipment name and number: owned or leased?	
Contractor:	Subcontractor:
Contractor inspector:	Date inspected:

	Yes	No	N/A
1. Are initial and daily/shift inspection records available? (16.A.01 & .02)			
2. Are only qualified operators assigned to operate equipment? (16.A.04)			
3. Are sufficient lights provided for night operations? (16.A.11)			
4. Does the unit have as a minimum a 5-B:C fire extinguisher? (16.A.26)			
5. Is there an effective working reverse alarm? (16.B.01)			
6. Is the unit shut down for refueling? (16.A.14)			
7. Are moving parts, shafts, sprockets, belts, etc., guarded? (16.B.03, .07 and .13)			
8. Is protection against hot surfaces, exhausts, etc., provided? (16.B.03 and .13)			
9. Are fuel tanks located in a manner to prevent spills or overflow from running onto engine exhaust or electrical equipment? (16.B.04)			
10. Are exhaust discharges directed so they do not endanger persons or obstruct operator vision? (16.B.05)			

	Yes	No	N/A
11. Are seat belts provided for each person required to ride on the equipment? (16.B.08)			
12. Is protection (grills, canopies, screens) provided to shield operators from falling or flying objects? (16.B.10 and .11)			
13. Is roll over protection provided? (16.B.12)			
14. Is a safe means of access to the cab provided (steps, grab bars, non-slip surfaces)? (16.B.03)_			
15. Are adequate head and tail lights provided? (16.A.07)			
16. Have brakes been tested and found satisfactory? (16.A.07)			
17. Does the unit have an emergency brake which will automatically stop the equipment upon brake failure? Is this system manually operable from the drivers position? (16.A.07)			
18. Is all equipment with windshields equipped with powered wipers and defogging or defrosting system? (16.A.07)			
19. Are all vehicles which will be parked or moving slower than normal traffic on haul roads equipped with a yellow flashing light or flasher visible from all directions? (16.A.13)			
20. Is the slow moving emblem used on all vehicles which by design move at 25 MPH or less on public roads? (08A.04)			

	Yes	No	N/A
21. Have air tanks been tested and certified? (20.A.01)			
22. Is an air pressure gage in working condition installed on the unit? (20.A.12)			
23. Does the air tank have an accessible drain valve? (20.B.17)			
24. Remarks: (Enter action taken for all “no” answers)			
Contractor inspector signature			
Contractor QC/safety officer/project manager			

SAFETY CHECKLIST FOR MATERIAL HOISTS

Contract # and title:	
Equipment name & number:	
Contractor:	Subcontractor:
Contract Inspector:	Date inspected:

	Yes	No	N/A
1. Are all hoist towers, masts, guys or braces, counterweights, drive machinery supports, sheave supports, platforms, supporting structures, and accessories designed by a licensed engineer? (16.K.02)			
2. Is a copy of the hoist operating manual available? (16.K.04)			
3. Do all floors and platforms have slip-resistant surfaces? (16.K.08)			
4. Are landings and runways adequately barricaded and is overhead protection provided where needed? (16.K.08)			
5. Are hoisting ropes installed IAW manufacturer's instructions? (16.K.10)			
6. Are operating rules posted at the hoist operator's station? (16.K.14)			
7. Are air powered hoists connected to an air supply of sufficient capacity and pressure to safely operate the hoist? (16.K.15)			
8. Are pneumatic hoses secured by some positive means to prevent accidental disconnection? (16.K.15)			
9. Remarks: (Enter actions taken for all "no" answers.)			
Contractor inspector signature			
Contractor QC/safety officer/project manager signature			

SAD Form 1666g-R Mar 97 Previous editions may be used for contracts referencing the 1992 edition of EM 385-1-1.

SAFETY CHECKLIST FOR EARTH DRILLING EQUIPMENT

Contract # and title:	
Equipment name & number:	
Contractor:	Subcontractor:
Contractor inspector:	Date inspected:

	Yes	No	N/A
1. Is a copy of the manual for all drilling equipment available? (16.M.01)			
2. Have all overhead electrical hazards and potential ground hazards been identified in a site layout plan and addressed in an activity hazard analysis? (16.M.02)			
3. Are MSDSs for all drilling fluids available? (16.M.05)			
4. Does the drilling equipment have 2 easily accessible emergency shut down devices (one for the operator and one for the helper)? (16.M.06)			
5. Is the equipment posted with a warning of electrical hazards? (16.M.06)			
6. Is there a spotter or an electrical proximity warning device available to ensure safe distances from power lines are maintained? (16.M.06)			
7. Remarks: (Enter actions taken for “no” answers)			
Contractor inspector signature			
Contractor QC/safety officer/project manager			

SAD Form 1666h-R Mar 97 Previous editions may be used for contracts referencing the 1992 edition of EM 385-1-1.

TRANSMITTAL OF SHOP DRAWINGS, EQUIPMENT DATA, MATERIAL SAMPLES, OR MANUFACTURER'S CERTIFICATES OF COMPLIANCE *(Read instructions on the reverse side prior to initiating this form)*	DATE	TRANSMITTAL NO.

SECTION I - REQUEST FOR APPROVAL OF THE FOLLOWING ITEMS *(This section will be initiated by the contractor)*

TO:	FROM:	CONTRACT NO.	CHECK ONE: ☐ THIS IS A NEW TRANSMITTAL ☐ THIS IS A RESUBMITTAL OF TRANSMITTAL _____
SPECIFICATION SEC. NO. *(Cover only one section with each transmittal)*	PROJECT TITLE AND LOCATION		CHECK ONE: THIS TRANSMITTAL IS FOR ☐ FIO ☐ GOV'T. APPROVAL

ITEM NO. *a.*	DESCRIPTION OF ITEM SUBMITTED *(Type size, model number/etc.)* *b.*	MFG OR CONTR. CAT., CURVE DRAWING OR BROCHURE NO. *(See instruction no. 8)* *c.*	NO. OF COPIES *d.*	CONTRACT REFERENCE DOCUMENT		FOR CONTRACTOR USE CODE *g.*	VARIATION *(See instruction No. 6)* *h.*	FOR CE USE CODE *i.*
				SPEC. PARA. NO. *e.*	DRAWING SHEET NO. *f.*			

REMARKS	I certify that the above submitted items have been reviewed in detail and are correct and in strict conformance with the contract drawings and specifications except as other wise stated. NAME AND SIGNATURE OF CONTRACTOR

SECTION II - APPROVAL ACTION

ENCLOSURES RETURNED *(List by Item No.)*	NAME, TITLE AND SIGNATURE OF APPROVING AUTHORITY	DATE

INSTRUCTIONS

1. Section I will be initiated by the Contractor in the required number of copies.

2. Each transmittal shall be numbered consecutively in the space provided for "Transmittal No.". This number, in addition to the contract number, will form a serial number for identifying each submittal. For new submittals or resubmittals mark the appropriate box; on resubmittals, insert transmittal number of last submission as well as the new submittal number.

3. The "Item No." will be the same "Item No." as indicated on ENG FORM 4288-R for each entry on this form.

4. Submittals requiring expeditious handling will be submitted on a separate form.

5. Separate transmittal form will be used for submittals under separate sections of the specifications.

6. A check shall be placed in the "Variation" column when a submittal is not in accordance with the plans and specifications--also, a written statement to that effect shall be included in the space provided for "Remarks".

7. Form is self-transmittal, letter of transmittal is not required.

8. When a sample of material or Manufacturer's Certificate of Compliance is transmitted, indicate "Sample" or "Certificate" in column c, Section I.

9. U.S. Army Corps of Engineers approving authority will assign action codes as indicated below in space provided in Section I, column i to each item submitted. In addition they will ensure enclosures are indicated and attached to the form prior to return to the contractor. The Contractor will assign action codes as indicated below in Section I, column g, to each item submitted.

THE FOLLOWING ACTION CODES ARE GIVEN TO ITEMS SUBMITTED

A -- Approved as submitted.

B -- Approved, except as noted on drawings.

C -- Approved, except as noted on drawings.
Refer to attached sheet resubmission required.

D -- Will be returned by separate correspondence.

E -- Disapproved (See attached).

F -- Receipt acknowledged.

FX -- Receipt acknowledged, does not comply as noted with contract requirements.

G -- Other *(Specify)*

10. Approval of items does not relieve the contractor from complying with all the requirements of the contract plans and specifications.

(Reverse of ENG Form 4025-R)

COST ESTIMATE ANALYSIS

For use of this form, see TM 5-800-2; the proponent agency is USACE.

PROJECT	INVITATION/CONTRACTOR	EFFECTIVE PRICING DATE	DATE PREPARED
LOCATION	CODE (Check one) ☐ A ☐ B ☐ C ☐ OTHER	DRAWING NO.	SHEET OF SHEETS
		ESTIMATOR	CHECKED BY

TASK DESCRIPTION	QUANTITY		LABOR				EQUIPMENT		MATERIAL		TOTAL	SHIPPING	
	NO. OF UNITS	UNIT MEAS	MH UNIT	TOTAL HRS	UNIT PRICE	COST	UNIT PRICE	COST	UNIT PRICE	COST		UNIT WT	TOTAL WT
TOTAL THIS SHEET													

DA FORM 5418-R, Apr 85

TRANSFER AND ACCEPTANCE OF MILITARY REAL PROPERTY

Form Approved
OMB No. 0704-0188

PAGE OF PAGES

Public reporting burden for this collection of information is estimated to average 30 minutes per response, including the time for reviewing instructions, searching existing data sources, gathering and maintaining the data needed, and completing and reviewing the collection of information. Send comments regarding this burden estimate or any other aspect of this collection of information, including suggestions for reducing this burden, to Washington Headquarters Services, Directorate for Information Operations and Reports, 1215 Jefferson Davis Highway, Suite 1204, Arlington, Va 22202-4302, and to the Office of Management and Budget, Paperwork Reduction Project (0704-0188), Washington, DC 20503.

1. **FROM** *(Installation/Activity/Service and Zip code)*	2. OPERATING UNIT	3. DISTRICT CODE	4. OPERATING AGENCY	5. DATE	6. JOB NUMBER	7. SERIAL NUMBER	8. CONTRACT NUMBER

9. **TO** *(Installation/Activity/Service and Zip code)*	10. OPERATING UNIT	11. DISTRICT CODE	12. OPERATING AGENCY	13. ACCOUNTING NUMBER	14. ACCOUNTABLE OFFICE NUMBER	15. TYPE OF TRANSACTION		16. PROJECT NUMBER
						A. ☐ NEW CONSTR. ☐ EXISTING FAC. ☐ CAPITAL IMP. ☐ OTHER *(Specify)*	B. ☐ BENF/O ☐ PHYSICAL COM. ☐ FINAN. COM. ☐ OTHER *(Specify)*	

ITEM NO. 17	CATEGORY CODE 18	FACILITY *(Category description)* 19	NO. OF UNITS 20	TYPE 21	UNIT OF MEAS. 22	TOTAL QUANTITY 23	COST 24	DRAWING NUMBERS 25	REMARKS 26

27.		28. ACCEPTED BY *(Signature)*	DATE
TRANSFERRED BY *(Signature)*	DATE	TITLE *(Post Engr./Base Civ. Engr./Navy Rep.)*	29. PROPERTY VOUCHER NUMBER
TITLE *(Area Engr./Base Engr./DPWO)*			

30. CONSTRUCTION DEFICIENCIES

31. REMARKS

INSTRUCTIONS

This form has been designed and issued for use in connection with the transfer of military real property between the military departments and to or from other government agencies. It supersedes ENG Forms 290 and 290B (formerly used by the Army and Air Force) and NAVDOCKS Form 2317 (formerly used by the Navy).

Existing instructions issued by the military departments relative to the preparation of the three superseded forms are applicable to this form to the extent that the various items and columns on the superseded forms have been retained. Additional instructions, as appropriate, will be promulgated by the military departments in connection with any new items appearing hereon.

With the issuance of this DD form, it is not intended that the departments shall revise and reprint manuals and directives simply to show the number of this DD form. Such action can be accomplished through the normal course of revision for other reasons.

Approved by OM 0348-0046

DISCLOSURE OF LOBBYING ACTIVITIES

Complete this form to disclose lobbying activities pursuant to 31 U.S.C. 1352
(See reverse for public burden disclosure.)

1. Type of Federal Action:

☐ a. contract
b. grant
c. cooperative agreement
d. loan
e. loan guarantee
f. loan insurance

2. Status of Federal Action:

☐ a. bid/offer/application
b. initial award
c. post-award

3. Report Type:

☐ a. initial filing
b. material change

For Material Change Only:
year _____ quarter _____
date of last report _____

4. Name and Address of Reporting Entity:

☐ Prime ☐ Subawardee
Tier _____, *if known*:

Congressional District, *if known:*

5. If Reporting Entity in No. 4 is Subawardee, Enter Name and Address of Prime:

Congressional District, *if known*:

6. Federal Department/Agency:

7. Federal Program Name/Description:

CFDA Number, *if applicable*: _____

8. Federal Action Number, *if known*:

9. Award Amount, *if known*:

$

10. a. Name and Address of Lobbying Entity
(*if individual, last name, first name, MI):*

b. Individuals Performing Services *(including address if different from No. 10a)*
(last name, first name, MI):

(attach Continuation Sheet(s) SF-LLL-A, *if necessary*)

11. Amount of Payment *(check all that apply)*:

$ _____ ☐ actual ☐ planned

12. Form of Payment *(check all that apply)*:

☐ a. cash
☐ b. in-kind; specify: nature _____
value _____

13. Type of Payment *(check all that apply)*:

☐ a. retainer
☐ b. one-time fee
☐ c. commission
☐ d. contingent fee
☐ e. deferred
☐ f. other; specify: _____

14. Brief Description of Services Performed or to be Performed and Date(s) of Service, including officer(s), employee(s), or Member(s) contacted, for Payment indicated in Item 11:

(attach Continuation Sheet(s) SF-LLL-A, *if necessary*)

15. Continuation Sheet(s) SF-LLL-A attached: ☐ Yes ☐ No

16. Information requested through this form is authorized by title 31 U.S.C section 1352. This disclosure of lobbyig activities is a materia representation of fact upon which reliance was placed by the tier above when this transaction was made or entered into. This disclosure is required pursuant to 31 U.S.C. 1352 . This information will be reported to the Congress semi-annually and will be available for public inspection. Any person who fails to

Signature: _____

Print Name: _____

Title: _____

Telephone No.: _____ **Date:** _____

Federal Use Only:

Authorized for Local Reproduction

INSTRUCTIONS FOR COMPLETION OF SF-LLL, DISCLOSURE OF LOBBYING ACTIVITIES

This disclosure form shall be completed by the reporting entity, whether subawardee or prime Federal recipient, at the initiation or receipt of a covered Federal action, or a material change to a previous filing, pursuant to title 31 U.S.C. section 1352. The filing of a form is required for each payment or agreement to make payment to any lobbying entity for influencing or attempting to influence an officer or employee of any agency, a Member of Congress, an officer or employee of Congress, or an employee of a member of Congress in connection with a covered Federal action. Use the SF-LLL-A Continuation Sheet for additional information if the space on the form is inadequate. Complete all items that apply for both the initial filing and material change report. Refer to the implementing guidance published by the Office of Management and Budget for additional information.

1. Identify the type of covered Federal action for which lobbying activity is and/or has been secured to influence the outcome of a covered Federal action.

2. Identify the status of the covered Federal action.

3. Identify the appropriate classification of this report. If this is a followup report caused by a material change to the information previously reported, enter the year and quarter in which the change occurred. Enter the date of the last previously submitted report by this reporting entity for this covered Federal action.

4. Enter the full name, address, city, state and zip code of the reporting entity. Include Congressional District, if known. Check the appropriate classification of the reporting entity that designates if it is, or expects to be, a prime or subaward recipient. Identify the tier of the subawardee, e.g., the first subawardee of the prime is the 1st tier. Subawards include but are not limited to subcontracts, subgrants and contract awards under grants.

5. If the organization filing the report in item 4 checks “Subawardee”, then enter the full name, address, city, state and zip code of the prime Federal recipient. Include Congressional District, if known.

6. Enter the name of the Federal agency making the award or loan commitment. Include at least one organizational level below agency name, if known. For example, Department of Transportation, United States Coast Guard.

7. Enter the Federal program name or description for the covered Federal action (item 1). If known, enter the full Catalog of Federal Domestic Assistance (CFDA) number for grants, cooperative agreements, loans, and loan commitments.

8. Enter the most appropriate Federal identifying number available for the Federal action identified in item 1 (e.g., Request for Proposal (RFP) number; Invitation for Bid (IFB) number; grant announcement number; the contract, grant, or loan award number; the application/proposal control number assigned by the Federal agency). Include prefixes, e.g., “RFP-DE-90-001.”

9. For a covered Federal action where there has been an award or loan commitment by the Federal agency, enter the Federal amount of the award/loan commitment for the prime entity identified in item 4 or 5.

10. (a) Enter the full name, address, city, state and zip code of the lobbying entity engaged by the reporting entity identified in item 4 to influence the covered Federal action.

    (b) Enter the full names of the individuals(s) performing services, and include full address if different from 10 (a). Enter Last Name, First Name, and Middle Initial (MI).

11. Enter the amount of compensation paid or reasonably expected to be paid by the reporting entity (item 4) to the lobbying entity (item 10). Indicate whether the payment has been made (actual) or will be made (planned). Check all boxes that apply. If this is a material change report, enter the cumulative amount of payment made or planned to be made.

12. Check the appropriate box(es). Check all boxes that apply. If payment is made through an in-kind contribution, specify the nature and value of the in-kind payment.

13. Check the appropriate box(es). Check all boxes that apply. If other, specify nature.

    Provide a specific and detailed description of the services that the lobbyist has performed, or will be expected to perform, and the date(s) of any services rendered. Include all preparatory and related activity, not just time spent in

Public reporting burden for this collection of information is estimated to average 30 minutes per response, including time for reviewing instructions, searching existing data sources, gathering and maintaining the data needed, and completing and reviewing the collection of information. Send comments regarding the burden estimate or any other aspect of this collection of information, including suggestions for reducing this burden, to the Office of Management and Budget, Paperwork Reduction Project (0348-0046), Washington, D.C. 20503.

DISCLOSURE OF LOBBYING ACTIVITIES
CONTINUATION SHEET

Approved by OM
0348-0046

Reporting Entity: _____ Page ____ of ____ ____

*U.S. G.P.O. 1990-260-708:00012

REAL PROPERTY INVENTORY

ITEM	TALLY	TOTAL
COMMODES		
LAVATORIES		
URINALS		
EXHAUST FAN (9")		
EXHAUST FAN (OTHER)		
WATER COOLER		
HOTWATER HEATER		
MOP SINK		
AC PLANT	LS 5 TN. 5-25 TN. 25-100 TN. OVER 100 TN.	
AS (WINDOW TYPE)		
FIRE ALARM SYSTEM	MANUAL HALON SPRINKLER	
EMERGENCY LIGHTS		
UNIT HEATER		
STRIP HEATER		
COOLING TOWER		
WALK-IN COOLER		
AIR CURTAIN		
EYE WASH		
SHOWERS		
BOILER	GAS FIRED OIL FIRED STEAM	
FUEL TANK	UNDERGROUND OUTSIDE	

REAL PROPERTY INVENTORY

ITEM	TALLY	TOTAL
WASH BASIN		
AIR COMPRESSOR		
HOISTS		
INVENTORY BY:		DATA:
RECONCILED BY:		DATA:

REAL PROPERTY INVENTORY

ITEM	TALLY	TOTAL
INVENTORIED BY:		DATE:
RECONCILED BY:		DATE:

*3

Minutes of the Project Pre-proposal Conference for Corrosion Control Paint Facility Robins AFB GA, FY04, UHHZ003011 & Corrosion Control De-paint Facility Robins AFB GA, FY03, UHHZ003014 @ 0900 Hours
16 June 2003

1. A Pre-proposal Conference was held at 0900 hours on 16 June 2003 in building 1555 conference room, Robins Air Force Base, GA to review the project solicitation with interested parties. A list of attendees has been attached as enclosure (1).

2. The meeting was opened with a review of contractual requirements of the solicitation. The following items were reviewed:

a. Proposal due date.

b. Project bid schedule including options.

c. Project construction cost limitation.

d. Project evaluation criteria.

e. Best value method of proposal evaluation.

f. Contract may be awarded without discussions.

g. Proposals development and format.

h. Proposal shall address technical and price proposal.

i. Questions shall be submitted via the Request For Information system.

j. Small and Disadvantaged Business Plan requirements.

k. Solicitation requires vibration testing.

l. A connected facility is not prohibited.

m. Window washing style equipment is not prohibited to change elevated filters.

n. Site visits would be scheduled with the Area Office, POC Mr. Fant, (478) 926-2103 or Mr. Adams (478) 926-0509. Permission for photography requires additional staffing.

3. The following potential bidder questions and government responses, were provided during the conference:

a. Definition of the different type of funds (MILCON, CPP, Transformation CCP and Pacer Expense 670 Funds) identified in the Request For Proposal? It was explained that the MILCON funds were those funds to be used for construction authorized by Congress. The CPP, Transformation CCP and Pacer Expense 670 Funds were funds to be used for equipment procurement.

b. What funds are now available? Only the FY03 MCON funds are currently available for construction contract award.

c. When will options be exercised? IAW page 205 paragraph 52.217-7 options will be exercised within 226 days of basic contract award.

d. Can the receipt of Proposal's time be moved from 1100 hours to later in the day? The government cannot move the Receipt of Proposal time to a later time on 29 July 2003.

4. Upon conclusion of the conference a site visit was conducted.

Pre-Proposal Conference

Project: Corrosion Control De-paint Facility & Corrosion Control Paint Facility	Date: 17 June 2003
Base/Fort: Robins AFB	Time: 0900 hours
Fiscal Year: 03/04	Local:
Line Item: UHHZ0030014/11	Type: N/A

Name (Print)	Position	Organization	Office Symbol	Telephone	Facsimile	E-mail
1. Leslie A. Zuniga	Project Manager	USACE	CESAS-PM-MR	(912) 652-5418	(912) 652-5090	leslie.a.zuniga@sas02.usace.army.mil
2 Ric Powers	Area Engr	"	CESAS-CO-RO	478-926-0298	478-926-4176	richard.l.powers@sas02.usace.army.mil
3 Doug Langley	P-M	HQ AFMC/CEC, AF	—	(937) 257-3827	(937) 656-0226	douglas.langley@wpafb.af.mil
4 JULIAN E. FANT	Project Engineer	USArmy Corps of Eng. Robins	CESACO-RO	478-926-2103	478-926-4176	julian.e.fant.jr@sas02.usace.army.mil
5 JERRY THOMSON	BASE PROJ ENG	778 CES/CECM	—	478-926-8840	478-926-8940	JERRY.THOMSON@robins.af.mil
6 Bill DeBoyce	Branch Chief	778 CES	CECM	478-926-8811	478-926-8940	William.DeBoyce@robins.af.mil
7 Dolat Mehta	Project Site Engr	" "	"	478 926 8850	" "	Dolatray.Mehta@robins.af.mil
8 Toni Hurley	Industrial Hygienist	78 AMDS/SGPB	→	478 327 7555	478 327-7525	toni.hurley@robins.af.mil
9 DON KEEL	MANAGER	THE AUSTIN COMPANY	TAC	678 336 2100	678 336 2101	DON.KEEL@THEAUSTIN.COM
10 Larry Kurtz	Ops Mgr	" "	" "	713 868 3132	713 868 2751	larry.kurtz@theaustin.com
11 RUBEN ENGLISH	ARCHITECT	778 CES/CECM	CECM	478-926-8829	478-926-8940	Ruben.English@robins.af.mil
12 BILL NIKSCH	MANAGER	THE AUSTIN COMPANY	TAC	713 868 3132	713 868 2751	bill.niksch@theaustin.com
13 CRAIG SOUTHORN	VICE PRES	M.A. MORTENSON CO		763 522 2100	763 287 5370	Craig.Southorn@mortenson.com
14 Erik Larson	Project Mgr	Wood/Harbinger, Inc.		425-822-9499	425-822-4338	elarson@wood-harbinger.com
15 BRUCE G. ALWARD	LEAD ELEC	WOOD/HARBINGER, INC.		425-822-9499	425-822-4338	balward@wood-harbinger.com
16 Elliott Williamson	Contract Specialist	SAVANNAH DISTRICT	CESAS-CT-C	912-652-5709	912-652-5828	elliott.w.williamson@sas02.usace.army.mil
17 Mike Windom	Civil Eng	Stantec Consulting		478-474-6100	478-474-8933	Mwindom@Stantec.Com
18 RONNIE HOPKINS	CIVIL	STANTEC CONSULTING		478-474-6100	478 474 8933	R.HOPKINS@STANTEC.COM
19 RON LUBINSKI	Const Mgr	CH2M HILL		720-286-2243	720-286 9105	RLUBINSKI@CH2M.COM
20 Sean Carothers	Pres.	Carothers/CCI²	N/A	662-473-2525	662-473-4519	scarothers@carothersconstruction.com
21 Ken Hietbrink	Architect	ATKINS		918-492-1600	918-492-8432	ken.hietbrink@atkinsamericas.com
22 MATT GWINN	ARCHITECT	ATKINS/HANSCOMB		770.815.3655	404.874.1473	MATT.GWINN@HANSOMBFGOULD.COM
23 Jerry Clineman	Safety	WR-ALC/SE	SEG	478-926-6271	478-926-5299	jerry.clineman@robins.af.mil
24 Lou Pierce	Safety	WR-ALC/SE	SEG	478-926-6271	478-926-5299	lou.pierce@robins.af.mil
25 Tom NeSmith	GEN. MGR	ACE/Putzel Electric		478-471-5100	478-471-5090	tnesmith@putzel.com

Pre-Proposal Conference

Project: Corrosion Control De-paint Facility & Corrosion Control Paint Facility — Date: 17 June 2003

Base/Fort: Robins AFB — Time: 0900 hours

Fiscal Year: 03/04 — Local:

Line Item: UHHZ0030014/11 — Type: N/A

	Name (Print)	Position	Organization	Office Symbol	Telephone	Facsimile	E-mail
26	AL GUNN	PROJ. MANAGER	ACE/PUTZEL		478-471-5100	478-471-5105	AL.GUNN@PUTZEL.COM
27	Glenn Schambeau	Proj Manager	Virginia Wrecking Co		251-964-6239	251-964-5937	GSchambeau@aol.com
28	GENE SMALL	ENGINEER	LG		404 818 8613	404 818 8100	gsmall@LG.com
29	JACK FERGUSON	PROJECT MANAGER	MCKENNEY'S INC		404-624-8636	404-624-8677	jlferguson@mckenneys.com
30	CHARLES GRIFFIN	ENGINEER	LOCKWOOD GREENE		404-296-5825	404-818-8100	cgriffin@lg.com
31	GREG JEFFERS	ENGINEER	MCKENNEY'S INC.		404-624-8618	404-624-8677	grjeffers@mckenneys.com
32	STEVE BRASWELL	PROJ. MANAGER	LOCKWOOD GREENE		404-818-8611	404-818-8345	sbraswell@lg.com
33	MARK ADAMS	PROJ. ENG.	USACE	CESAS-CD-RO	478-926-0509	478-926-4176	mark.g.adams@sas02.usace.army.mil
34	LAURIE HOWELL	ESTIMATOR	CCI² - CAROTHERS/CHZMHILL		662-473-2525	662-473-4519	lhowell@carotherscontruction.com
35	Pat Brown	Design Manager	CCI² - " "		913-897-1160	913-897-0314	pbrown2@ch2m.com
36	Bill Bohn	V.P. PRECON	ACE/Putzel Electric		678-686-2668	404-355-5811	bbohn@putzel.com
37							
38							
39							
40							
41							
42							
43							
44							
45							
46							
47							
48							
49							
50							

SECTION 01010

GENERAL PROJECT DESCRIPTION AND DESIGN REQUIREMENTS

1. GENERAL

1.1 The Contractor shall design and construct the Corrosion Control Depaint Facility at Robins Air Force Base, Georgia resulting in a complete and useable facility.

To the maximum extent possible, these specifications are performance-based. Alternate materials that meet the performance criteria are permitted, provided they meet both functional and reliability/maintainability/longevity of the specified material and do not conflict wit the specific requirements of the documents.

1.2 The scope of work for the Corrosion Control Depaint Facility at Robins Air Force Base, Georgia, includes the design, site preparation and construction of a depainting facility. The facility is designed for the depainting of large and medium aircraft, including the C-5, C-17, 767, KC-135, 707 and the C-130 and shall contain a hangar floor for stripping paint (dry processes), administrative space, building support, production support, and special support areas. The hangar floor shall be large enough to strip a C-5 aircraft with minimum clearances and space where the dry media stripping system (DMSS) can be used to depaint aircraft. Supporting facilities will include but are not limited to: parking, concrete pavement, sidewalks, water, sewer, electrical service, fire alarm systems, fire sprinkler system, storm drainage, erosion control measures, information systems, and landscaping.

Site work for this facility shall include the demolition of Buildings 55, 60, and 51. In addition the contractor will be required to design and construct addition/alterations to Building 44.
Interior design for furniture and finishes is included in the scope of work. The Contractor shall perform the Structural Interior Design package as part of this contract and incorporate the SID elements into the construction of the facilities. The Contractor shall perform the Comprehensive Interior Design package for this contract and forward this package to the Government. The Government will procure and install the CID under a separate contract.

1.2.1 The five options for this contract include: the design and construction of process cooling in the DePaint Facility, the design and installation of the DePaint Facility equipment, the design and construction of the Paint Facility, the design and construction of process cooling in the Paint Facility, and the design and installation of the Paint Facility equipment.

1.2.1.1 Process Cooling for the DePaint Facility – this contract option shall provide process cooling for the DePaint hangar bay, including the cooling plant, cooling equipment, distribution piping, air handling units, controls, electrical service, and all components required for a complete, operational, and easily maintainable system. Under this option, the cooling plant provided shall be a combined plant to provide for process cooling of both the Paint and DePaint Facilities. The plant shall be sized to support cooling for the simultaneous operation of both the Paint and DePaint Facilities process cooling systems, and shall be sited and constructed to allow future expansion of the plant to install backup/redundant chillers in the future. The cost of this option shall be the cost increase associated with the design and installation of the combined cooling plant, as compared to the cooling plant required to provide the Paint Facility process cooling only. Execution of this option assumes that the option for Process Cooling for the Paint Facility is also executed.

*8
1.2.1.2 DePaint Facility Equipment - this contract option shall include all equipment systems, which are not part of the Air Force real property system. Depaint facility equipment is listed below:

- ~~Overhead Platforms (Teleplatforms)~~
- Tail Work Stands - if provided as part of engineering solution
- Fall Protection system
-
- Blast Media Depainting systems (Dry Media Stripping-DMSS)
- Media Recovery system
- Process Air Purification system
- Hot Water/Soap system (Wash rack equipment)
- Breathing Air system
- 400 Hz Generator
- Aircraft Jacks
- Forklift
- Storage Racks

Integration of this equipment into the facility will require design coordination for structural support for these items.

1.2.1.3 Paint Facility – The facility is designed for the painting of large and medium aircraft, including the C-5, C-17, 767, KC-135, 707 and the C-130 and shall contain a hangar floor for aircraft painting processes, administrative space, building support, production support, and special support areas. The hangar floor shall be large enough to paint a C-5 aircraft with adequate or required clearances and provide for the aircraft painting process in the hangar bay. The administrative space shall consist of open office space and needs private offices and an open area for technical orders, schedulers etc. The building support area includes space for mechanical room (including supply and return plenums), fire protection room, electrical room , and communications room. The production support area shall consist of a chemical storage and dispensing room, paint storage, paint mixing, solvent storage, stencil room, issue room, equipment storage room, equipment cleaning room, respirator cleaning room and initial accumulation point room. The special support areas shall consist of space for a break room, and restrooms (including showers and lockers). Supporting facilities will include but are not limited to: parking, concrete pavement, sidewalks, water, sewer, electrical service, fire alarm systems, fire sprinkler system, storm drainage, erosion control measures, information systems, and landscaping.

In order to minimize cost to the overall project, the paint facility may be adjoined with the depaint facility. Adjoined facilities does not imply combined facilities, and each facility shall meet all the functional requirements independent of the other (with the exception of the combined facility process cooling option described under the Process Cooling for the DePaint Facility paragraph).

Site work will include the demolition of Buildings 53 and 56.

1.2.1.4 Process Cooling for the Paint Facility - this contract option shall provide process cooling for the Paint hangar bay, including the cooling plant, cooling equipment, distribution piping, air handling units, controls, electrical service, and all components required for a complete, operational, and easily maintainable system. The process cooling plant for this option is for the paint facility only and shall be sited and installed to allow future expansion of the plant to install backup/redundant chillers in the future. This plant does not include any consideration for process cooling of the depaint facility.

*8
1.2.1.5 Paint Facility Equipment - this contract option shall include all equipment systems, which are not part of the Air Force real property system. Paint facility equipment is listed below:

- ~~Overhead Platforms (Teleplatforms)~~
- Tail Work Stands - if provided as part of engineering solution
-
- Fall Protection System
- Acid Storage and Distribution System
- Hot Water/Soap Washdown Distribution System
- Medium Pressure Hot Water Distribution System
- Rinse Distribution System
- Steam Cleaning System
- Alodine Storage and Distribution System
- Breathing Air System
- Paint Booth
- Paint Shakers
- Paint Gun Cleaning system
- Paint Carts
- 400 HZ Generator
- Aircraft Jacks
- Forklift
- Storage Racks
- Freezer

Integration of this equipment into the facility will require design coordination for structural support for these items.

1.3 Sustainable Design
*(6)
This project will achieve a rating of 18 in sustainable design features as measured through the use of LEED Green Building Rating System. The successful contractor will complete and submit the LEED Facility Points Summary with the design after construction contract award. A minimum rating of 18 is required. The following items shall be included, and apply to the Depaint and Paint Facilities:

1.3.1 SUSTAINABLE SITES

1.3.1.1 The contractor shall control erosion, sedimentation and water quality through the use of strict Division 1 performance specifications (LEED Prerequisite)

1.3.1.2 The contractor shall work with the Base to evaluate the site to assure that it does not occupy prime training or maneuver land, is not lower than the 100 FEMA flood elevation, does not threaten the natural habitat of an endangered species nor is within 100 feet of defined wetlands (1 Point)

1.3.1.3 The contractor shall provide a suitable means of securing bicycles for use by cyclists and flightline workers (1 Point)

1.3.1.4 Require that preferred parking spaces be provided for carpools/vanpools (1 Point)

1.3.1.5 The contractor shall provide storm water treatment systems to remove 80% TSS and 40% TP (1 Point)

1.3.1.6 The contractor shall comply with IESNA standards for exterior lighting using specialized wall packs that have sharp cutoff (1 Point)

1.3.1.7 The contractor shall use plumbing fixtures that meet or exceed the 1992 EPA Act for water consumption (1 Point)

1.3.2 WATER EFFICIENCY

No landscape irrigation systems shall be provided (1 point)

1.3.3 ENERGY & ATMOSPHERE

1.3.3.1 The contractor shall perform fundamental building systems commissioning (Prerequisite)

1.3.3.2 The contractor shall meet the required energy efficiency budgets (Prerequisite)

1.3.3.3 The contractor shall utilize building equipment and systems that reduce energy usage by 20% from ASHRAE Standard 90.1. This could include optimizing energy performance by utilizing recycled air in the hangars, evaluating heat recovery systems for potential use, optimizing the efficiency of the building envelope, increasing equipment efficiencies, optimizing lighting controls, and using compact fluorescent light fixtures and LED exit signs (2 Points)

1.3.3.4 Provide additional commissioning and systems validation and calibration (1 Point)

1.3.4 MATERIALS & RESOURCES

1.3.4.1 The contractor shall povide dedicated space for Storage & Collection of Recyclables. (Prerequisite)

1.3.4.2 The contractor shall supply 20% of building materials that are manufactured within 500 miles of the site. (1 Point)

1.3.5 INDOOR ENVIRONMENTAL QUALITY

1.3.5.1 The contractor shall meet minimum indoor air quality performance requirements for the administrative and support areas as determined by ASHRAE. (Prerequisite)

1.3.5.2 Ventilation systems shall have an air exchange effectiveness greater that 0.9 for the administrative and support areas as determined by ASHRAE. (1 Point)

1.3.5.3 The contractor shall develop an integrated IAQ management plan that addresses the protection of the ventilation system components during construction and cleanup of contaminated components after construction is complete. This will also include specifying requirements to shut down return systems during heavy construction and use of any VOC emitting materials and systems flush-out (1 Point)

1.3.5.4 The contractor shall use VOC compliant adhesives (1 Point)

1.3.5.5 The contractor shall use VOC compliant “Green Seal” paints (1 Point)

1.3.5.6 The contractor shall use “Green Label” carpets (1 Point)

1.3.5.7 The contractor shall specify that indoor chemicals and pollutants are controlled through the use of air showers, entry grates, and other safety requirements outlined in this set of documents. (1 Point)

1.3.5.8 The contractor’s design shall comply with ASHRAE Standard 55-1992, addenda 1995 for thermal comfort standards (1 Point)

1.4 Site Development and Utilities

Site development shall include all clearing, grading, roads, parking lots, landscaping, sidewalks, curbs and gutters and utilities for the complex.

1.5 Demolition

Demolition shall include asbestos and lead abatement and removal of buildings, foundations(including any sub-base material), pavement and site improvements. Underground utilities shall be removed and capped as specified.

1.6 Facilities

1.6.1 The Corrosion Control Depaint Facility is to include functional space for switchgear, communications operations, management, administrative areas, 24-hour operator/information operations, logistical support, and records management. Provide central monitoring and control capability, fully compatible with the existing installation Direct Digital Control System. All facilities shall comply with DOD minimum antiterrorism standards for buildings as specified in the Uniform Facilities Criteria UFC dated 31 July 2002 in accordance with memorandum from the Secretary of Defense dated 20 September 2002.) Access for the handicapped will be provided.

1.6.2 If Option for Paint Hangar is taken then the Paint Facility is to include functional space for switchgear, communications operations, management, administrative areas, 24-hour operator/information operations, logistical support, and records management. Provide central monitoring and control capability, fully compatible with the existing installation Direct Digital Control System. All facilities shall comply with DOD minimum antiterrorism standards for buildings as specified in the Uniform Facilities Criteria UFC dated 31 July 2002 in accordance with memorandum from the Secretary of Defense dated 20 September 2002.) Access for the handicapped will be provided.

1.7 There are no Army Standard Designs for this project.

1.8 Project design plans and specifications shall be in the Metric SI System of measurements (soft metric). The site survey drawings provided are in metric units. The Offerors will present their plans in “soft metric” units of measure.

2. DESIGN CRITERIA

2.1 The proposal documents shall include adequate information in the form of narratives, drawings, calculations, catalog cuts, etc., to enable the Government to adequately review the proposal. Proposal documents shall include all requirements listed in the contract clauses and compliance with the format requirements is encouraged to facilitate review and award.

2.2 The design, following award, will include a 60% and final design submittal, corrected final, and revised final design submittals. See Section 01012, DESIGN AFTER AWARD.

2.3 The proposal drawings may be done with any CADD software. Once the contract is awarded all drawings will be initiated and done in Microstation version J or Version 8 software in accordance with A/E/C CADD Standards Manual which is available at: (http://tsc.wes.army.mil/). Each building will have a complete set of drawings. Common details used throughout shall be copied to each set so that it can stand-alone. Stating that a building is a mirror image of another is not acceptable. Drawings for each building shall be grouped together to form a complete set. Site development and utilities will naturally be in a separate set.

2.4 Codes, reference documents and criteria referenced within this RFP, although not attached, are an integral part of this RFP. Each proposer shall be responsible for securing any necessary reference at his own expense and resources. Requirements of this RFP may delete, revise, add to, or substitute for criteria contained in the referenced documents and this RFP shall be deemed the controlling authority of any changes to the other referenced documents and criteria.

2.5 Information provided in the appendices is intended to provide additional design requirements and information.

- Appendix A - References.
- Appendix B - New Site Drawings.
- Appendix C - Functional Room Requirements, a room-by-room summary of specific user requirements for functions within the new facility.
- Appendix D - Geotechnical Information.
- Appendix E - As-built drawings for Building 44.
- Appendix F – Proposed Schematic New Work Floor Plan - Building 44.
- Appendix G - Specific Base Wide Technical Specifications.
- Appendix H - Process Material Safety Data Sheets.
- Appendix I - Environmental and Abatement Information.
- Appendix J - Existing Information on Buildings 51, 53, 55, and 56.
- Appendix K – Existing Photos of Building 60.
- Appendix L - Base Architectural Compatibility Standard.
- Appendix M - Base Facility Standard.
- Appendix N - Interior Design Presentation Format.
- Appendix O - Example Permits.
- Appendix P - Integrated Natural Resources Management Plan – Robins AFB, Georgia.
- Appendix Q - Process Flow Diagrams.
- Appendix R - Robins AFB Weather Data.
- Appendix S - Existing Compressed Air Plant Information.
- Appendix T – Existing Storm Sewer Drawings

2.6 The drawings included in this RFP are the topographic survey for the project site and a schematic floor plan for the modifications being made to Building 44. The drawing for building 44 represents an acceptable solution to the functional requirements for this facility, and has been coordinated with and approved by the using agency. Use of this design is optional

3. SPECIFICATION INTENT

The intent of these specification sections is to describe the requirements for quality, function, and materials, and types of construction in sufficient detail to enable engineering and design to be completed by the Contractor. In these specification sections, the design intent and outlines of the parameters

to which the Contractor shall design are described by engineering and design discipline.

3.1 Section 01012 DESIGN AFTER AWARD defines the design and performance criteria. The applicable building codes and standards shall be used as the minimum criteria to develop the construction documents unless more stringent criteria is defined for a specific area.

3.2 Section 01330 SUBMITTAL PROCEDURES (DESIGN BUILD) defines the format and submittal requirements in which the design and the construction documents shall be prepared by the Contractor.

4. COORDINATION BETWEEN THE VARIOUS DISCIPLINES

The Contractor shall be responsible for the coordination between design, engineering and construction disciplines in order to fulfill the requirements of this contract and to provide for a complete, integrated and functional design.

5. QUALITY OF WORK

Construction documents shall be sufficient to afford a clear understanding of the construction work required. The work shall be organized in a manner that will assure thorough coordination between the various details on the drawings, and between the drawings and the specifications. The Contractor shall cross-check all work until all conflicts have been reconciled. The US Army Corps of Engineers, Savannah District Design Manual, current edition is available on the Internet at:
http://en.sas.usace.army.mil under Engineering Criteria.

Unified Facility Guide Specifications (UFGS) are available on the internet at:

http://www.hnd.usace.army.mil/TECHINFO/ or http://www.ccb.org/ufgs/ufgs.htm

SpecIntact software which is used to edit the guide specifications is available for free at the same site.

These specifications shall be used as the basis for format and preparation of construction documents.

6. GENERAL DESIGN REQUIREMENTS

6.1 General

6.1.1 The project shall be designed and constructed in accordance with the criteria contained herein using industry standard materials and efficient practices. The Contractor shall use materials and equipment accepted within the construction industry. The building design and the materials selected shall be of high quality, durable and easily maintained. Unless noted otherwise, durable means a 50-year life for the structure, 20-year life for main mech/elec components (e.g. chillers, boilers, switchgear), and 20-year finish for roof/wall panels.

“Easily maintained” means (1) Immediate access (including materials) to perform routine maintenance; (2) Material handling to remove components (e.g. boiler/chiller tubes) and (3) a clearly defined method to replace an entire piece of equipment.

Processes and equipment for the paint and depaint facilities shall not require the workers to lift more than 22.7 kg (50 lb) in their daily, routine work activities.

6.1.2 The Contractor shall prepare complete construction documents for all work designed as required by the RFP. The construction documents to be prepared include, but are not limited to, construction drawings, specifications, submittals, and design analyses as required in Section 01012 DESIGN AFTER AWARD and 01330 SUBMITTAL PROCEDURES (DESIGN BUILD). The Contractor's Designers of Record shall develop construction document technical specifications for all areas of work. The design documents must be provided in soft metric (refer to specification section 01415 METRIC MEASUREMENTS).

6.1.3 The Contractor shall be responsible for the professional quality, code compliance, technical accuracy and coordination of all designs, drawings, specifications and other documents or publications upon which the design and construction are based. In projects having multiple buildings, each building shall have its own complete set of drawings. Drawings will not be cross-referenced between buildings. Copy common details to each set. Stating that this building is a mirror of another is not acceptable either. Create a complete set of drawings for each building.

6.1.4 The project specifications shall be prepared using UFGS guide specifications, except that Specific Base Wide Technical Specifications shall be used as included in Appendix G of this RFP. For specific equipment, as the Contractor desires, provide actual catalog data (including standard features, proposed options and other options) of actual products to be used. Once selected and reviewed by the Government, no substitutions will be allowed. For this equipment, the products portion of the specification can be deleted. If there is more than one UFGS guide specification for the same thing, use the one with an “A” suffix. If a UFGS guide specification cannot be found, contact the Savannah District to see if a guide specification exists. If a guide specification does not exist the Design/Build Contractor will prepare a job-specific specification. The UFGS shall be edited and adapted by the designer for this project, incorporating UFGS instructions and recommendations in the notes to specifier contained in the guide specs. The designer is to delete inapplicable portions of the guide specification and revise and/or supplement, as required, the applicable portions to provide a complete project specification. Editing of specifications shall be for bracketed options and project requirements as stated in the RFP only. Specifications shall be submitted at 60% design submittal in hard copy form that shows the text added and deleted with additions highlighted and deletions lined through but still readable. This feature is available in SpecsIntact. Following is a partial list of UFGS specifications that may be required for this project. Other UFGS sections shall be added and submitted by the Design/Build Contractor as needed to address all other portions of the work in the accepted proposal.

Division 02 Sitework

02111 EXCAVATION AND HANDLING OF CONTAMINATED MATERIAL
02220 DEMOLITION
02300 EARTHWORK
02315 EXCAVATION, FILLING AND BACKFILLING FOR BUILDINGS
02316 EXCAVATION, FILLING AND BACKFILLING FOR UTILITIES SYSTEMS
02364 TERMITICIDE TREATMENT FOR SUBTERRANEAN TERMITE CONTROL
02370 SOIL SURFACE EROSION CONTROL
02510 WATER DISTRIBUTION
02531 SANITARY SEWERS
02547 BITUMINOUS PAVEMENT WITH BASE COURSE
02556 GAS DISTRIBUTION SYSTEM
02630 STORM-DRAINAGE SYSTEM
02741 HOT-MIX ASPHALT FOR ROADS
02748 BITUMINOUS TACK AND PRIME COATS
02754 CONCRETE PAVEMENTS FOR SMALL PROJECTS
02763 PAVEMENT MARKINGS

02770 CONCRETE SIDEWALKS AND CURBS AND GUTTERS
02821 FENCING
02921 SEEDING
02922 SODDING
02923 SPRIGGING
02930 EXTERIOR PLANTING
02936 TURF – BERMUDA GRASS SEEDING
02980 PATCHING OF RIGID PAVEMENTS

Division 3 Concrete

03100 STRUCTURAL CONCRETE FORM WORK
03150 EXPANSION JOINTS, CONTRACTION JOINTS, AND WATERSTOPS
03300 CAST IN PLACE CONCRETE
03200 CONCRETE REINFORCEMENT
03307 CONCRETE FOR MINOR STRUCTURES
03413A PRECAST ARCHITECTURAL CONCRETE (if used)

Division 4 Masonry

04200A MASONRY
04220A NONBEARING MASONRY VENEER/STEEL STUD WALLS (if used)

Division 5 Metals

05120 STRUCTURAL STEEL
05300 STEEL DECKING
05400 COLD-FORMED STEEL FORMING
05450 PRE-ENGINEERED LIGHT GAUGE STEEL TRUSSED FRAMES (if used)
05500A MISCELLANEOUS METAL

Division 6 Woods and Plastics

06100A ROUGH CARPENTRY
06200A FINISH CARPENTRY

Division 7 Thermal and Moisture Protection

07416A SEE APPENDIX G FOR BASE STANDARD
07600A SHEET METALWORK, GENERAL
07840A FIRESTOPPING
07900A JOINT SEALING

Division 8 Doors and Windows

08110 STEEL DOORS AND FRAMES
08120 ALUMINUM DOORS AND FRAMES
08210 WOOD DOORS
08342 STEEL SLIDING HANGAR DOORS
08520A ALUMINUM AND ENVIRONMENTAL CONTROL WINDOWS
08710 DOOR HARDWARE
08810A GLASS AND GLAZING

Division 9 Finishes

09000 BUILDING COLOR AND FINISH SCHEDULE
09009 FLOOR GRID SYSTEM – WALK OFF MAT
09250A GYPSUM WALLBOARD
09310A CERAMIC TILE
09510A ACOUSTICAL CEILINGS
09680A CARPET
09900A PAINTING, GENERAL

Division 10 Specialties

10100A VISUAL COMMUNICATIONS SPECIALTIES
10160A TOILET PARTITIONS
10260A WALL AND CORNER PROTECTION
10270A RAISED FLOOR SYSTEM
10430A EXTERIOR SIGNAGE
10440A INTERIOR SIGNAGE
10800A TOILET ACCESSORIES
10999 FIRE EXTINGUISHER CABINETS

Division 11 Equipment

11020A SECURITY VAULT DOOR

Division 12 Furnishings

12320A CABINETS AND COUNTERTOPS
12490A WINDOW TREATMENT
12705 PREWIRED WORKSTATIONS
12910 ENTRANCE MATS AND FRAMES

Division 13 Special Construction

13080A SEISMIC PROTECTION FOR MISCELLANEOUS EQUIPMENT
13100A LIGHTNING PROTECTION
13120 STANDARD METAL BUILDING SYSTEM
13721 SMALL INTRUSION DETECTION SYSTEM
13851A FIRE DETECTION/ALARM SYSTEM, ADDRESSABLE SYSTEM
13920A FIRE PUMPS
13930 WET PIPE SPRINKLER, FIRE PROTECTION
13935 DRY PIPE SPRINKLER SYSTEM, FIRE PROTECTION

Division 15 Mechanical

15070A SEISMIC PROTECTION FOR MECHANICAL EQUIPMENT
15080A THERMAL INSULATION FOR MECHANICAL SYSTEMS
15181A CHILLED AND CONDENSER WATER PIPING AND ACCESSORIES
15190A GAS PIPING SYSTEMS
15400A PLUMBING, GENERAL PURPOSE
15565A HEATING SYSTEMS; GAS FIRE HEATERS
15569A WATER AND STEAM HEATING; OIL, GAS OR BOTH; UP TO 20 MBTUH
15620A LIQUID CHILLERS
15645A COOLING TOWERS
15895A AIR SUPPLY, DISTRIBUTION, VENTILATION, AND EXHAUST SYSTEM
15951A DIRECT DIGITAL CONTROL FOR HVAC
15990A TESTING, ADJUSTING, AND BALANCING OF HVAC SYSTEMS
15995A COMMISSIONING OF HVAC SYSTEMS

Division 16 Electrical

16070A SEISMIC PROTECTION FOR ELECTRICAL EQUIPMENT
16370A ELECTRICAL DISTRIBUTION SYSTEM, AERIAL
16375A SEE APPENDIX G FOR BASE STANDARD

16415A SEE APPENDIX G FOR BASE STANDARD

16710A PREMISES DISTRIBUTION SYSTEM
16770A RADIO AND PUBLIC ADDRESS SYSTEM
16771 TELEPHONE SYSTEM OUTSIDE PLANT

6.2 Project Schedule/phasing

Depaint Facility

Notice to Proceed (NTP) for the design of the DePaint Facility (FY03 Base Bid) will be issued no later than 14 February, 2004. Award of the options (if selected) will be issued after government funding becomes available.

The modifications to building 44 will be the first phase of the project. The Contractor shall have the building 44 modifications completed and ready for the Air Force to move in people prior to the demolition of Building 55. The contractor shall allow the Air Force 30 days to move the people and equipment from Building 55 to the renovated Building 44 after it has been turned over to the Air Force for occupancy. The Contractor shall provide notification to the State prior to the start of demolition of facilities.

Building 51 and 60 will be shut down and out of service before construction starts.

Paint Facility

Buildings 53 and 56 may not be demolished until August 1, 2004. Existing Building 43 is to be left in tact. The Contractor shall provide notification to the State prior to the start of demolition of facilities.

Utility Outages

The contractor shall provide 21 days notice on all utility outages. Where possible the outages should be completed over the weekends (1600 Friday-0500 Monday).

7. RFP DESIGN AND TECHNICAL CRITERIA

All designs and construction document drawings and specifications shall be prepared to comply with the RFP. The RFP describes the requirements and scope that shall not be changed, and shall be included in the construction documents. All remaining design work shall be performed by the Contractor based on the design criteria as required by the RFP. No deviations from the criteria will be allowed unless prior approval is obtained from the Contracting Officer's Representative. All questions or problems encountered by the Contractor in following criteria shall be promptly submitted with recommendations to the Contracting Officer's Representative for approval.

7.1 Conflicts In RFP Criteria

Where the various elements of the RFP are in conflict, the following priority shall be used to establish precedence, unless specifically noted otherwise:

a. This RFP sections 01010, 01012, 01013, 01014
b. Base Specific Specifications
c. Base Standards
d. Balance of RFP specifications
e. Note that a conflict does not exist where there is a “minimum” criteria in one location and a more stringent criteria in another location. Both criteria must be met, for instance, if a design floor loading and a minimum thickness are specified, then whichever criteria is more stringent must be met

7.2 Mechanical Room shall be of sufficient size to accommodate and serve all mechanical equipment specified by the mechanical design. The

Engineer/Architect of record shall certify and demonstrate that adequate space has been provided for safe operation of equipment and maintenance capability. Mechanical equipment layouts shall comply with Sections 01013 and 01014.

8. APPLICABLE BUILDING CODES AND STANDARDS

The codes listed in Appendix A shall be used as standards for building construction and life safety design. Where there is a conflict between the RFP and building codes, the most stringent shall apply. When codes are in conflict, the most stringent shall apply. This list is not intended to be a complete list. All work shall be designed and constructed to meet all state and Federal codes, standards and laws. Refer to the technical specifications for other standards and references not listed below.

9. ENGLISH OR METRIC DESIGN

The design shall be developed using soft metric units of measure. The site survey is done in Metric units. The Contractor shall coordinate. Specifications requiring metric measurements may contain requirements for equipment (e.g. printers, HVAC systems) described in inch-pound (I-P) units in which case no metric substitution will be allowed. Specifications requiring metric measurements shall include references to related non-metric industry and/or Government standards. The Contractor shall resolve discrepancies, such as mismatches or product unavailability, arising from use of both metric and non-metric measurements and discrepancies between the measurements in the specifications and the measurements in the drawings. Submittals for Government approval or for information only shall cover the SI or I-P products actually being furnished for the project. The Contractor shall submit the required drawings and calculations in the same units used in the contract documents describing the product or requirement unless otherwise instructed or approved.

10. GENERAL CONSTRUCTION REQUIREMENTS

10.1 Government-Furnished Government-Installed Equipment (GFGI)

All loose furniture, equipment, computers and related hardware, video projectors, VCR's, TV's, ice machines, drink machines, vending machines, microwaves, and refrigerators are Government furnished and installed. The Contractor shall provide utility connections and space for these items.

The items to be specified in the Comprehensive Interior Design (CID) Package (office furniture and new loose furnishings) are GFGI equipment. See Appendix N to this document. The Contractor shall design the CID package and provide it to the Government as part of this Contract.

11. SITE CONDITIONS AND REQUIREMENTS. See specifications Sections 01013 and 01014 for more specific instructions.

11.1 Project Limits

The Contractor shall confine all work within the area shown on the site survey and in sections 01013 and 01014.

11.2 Environmental

An environmental site assessment has been completed. It has been determined that this project contains lead based paint on the existing building steel of Buildings 51, 53, 55 and 56. Asbestos is anticipated in Buildings 55 and 56. Refer to Appendix I for additional information.

11.3 Hazardous Materials and Contamination

The Government does anticipate that the Contractor will be required to remove or dispose of hazardous materials and waste during the site preparation phase of this project.

11.4 Disposal of Waste Materials

11.4.1 The Contractor shall identify, as a part of his submittals required by this contract, the specific disposal site or sites for any waste materials generated by the Contractor’s operations at Robins Air Force Base.

11.4.2 The Contractor shall edit and submit the following UFGS as defined in Section 01012 DESIGN AFTER AWARD:

> 01355 ENVIRONMENTAL PROTECTION. In addition to other requirements within Specification 01355, the following SD-07 Certificates shall be listed requiring Government approval: specific disposal sites, documentation (i.e., weight tickets, etc.), and compliance of disposal by resale.

11.5 Demolition and Removals

The Contractor shall survey and stake-out the project boundaries before starting work. The survey drawing provided in the RFP indicates existing conditions and locations of existing utilities. The Contractor may utilize the utilities during construction operations and may incorporate the utilities as part of the final project. If these existing utilities are determined to be inadequate for construction operations or incorporation into the final facility, they shall be upgraded as part of the construction project. However, if the Contractor elects not to use the existing utilities, they shall be demolished and removed as part of the construction project. Existing utilities that interfere with this project shall be relocated. The information shown on the survey drawing is the most recent data. The Contractor is responsible for furnishing an independent topographic survey of the project site, and all line and grade surveys, and as-built surveys of the construction. All demolition debris shall be recycled or removed to the landfill off-base.

11.6 Flightline Requirements

11.6.1 All Contractors working in and around the Robins' airfield will comply with *UFC 3-260-01, Attachment 2, A.2.2 and RAFB 13-204*. Contractor employees requiring vehicle access to the controlled area of the Flightline/Industrial Area shall display their company's name on both the right and left sides of the vehicle. Lettering shall be at least one and one half inches high and may be either permanently or magnetically affixed to the vehicle. The government will deny entry to contractor vehicles not displaying the company name.

11.6.2 Prior to driving on the Flightline or Industrial Area , the contractor shall ensure that all personnel required to operate vehicles on the Flightline are trained and certified. The contractor is responsible for scheduling the training through 78 OSS/OSAB, 926-2114, with adequate lead-time so as not to interfere with the contract schedule. Upon completion of the training, an AF Form 483 (Certificate of Competency) will be issue by Airfield Manger's office, which certifies that the individual has been trained on Flightline driving. This certification must be in the possession of the vehicle operator when driving on the Flightline or Industrial Area .

11.6.3 Contractors will provide an escort for all material suppliers or vendors transporting equipment or material to/from the Flightline job site.

The certified escort can be a passenger or operate a lead vehicle no further than three vehicle lengths in front of the escorted vehicle. The contractor shall ensure that all subcontractors comply with all Flightline requirements. The contractor shall obtain approval from Base Operations for all haul routes or other travel requirements on the Flightline

11.6.4 In addition to the validated AF Form 483, vehicle operators shall have valid state driver's licenses in their possession when driving on the Flightline. Vehicle operators shall adhere to Flightline driving procedures contained in RAFB Instruction 13-204, *CONTROL AND OPERATION OF VEHICLES ON ROBINS AFB FLIGHTLINE AND INDUSTRIAL AREA*. The contractor is responsible for ensuring that all contractor personnel, subcontractors, and suppliers meet all flightline requirements. The government may, at its discretion, remove any contractor, subcontractor, or supplier employee from and prohibit access to the flightline for the duration of this contract for violations of flightline procedures.

11.6.5 The contractor shall employ a minimum of one person for each area where construction activity is underway whose full time job is to monitor radio traffic from the base control tower to ensure that no flightline violations occur.

11.6.6 Under no circumstances shall contractor employees enter any Flightline building or area not covered by the contract or authorized for access to the contract area. .

11.6.7 Upon completion of the contract, AF Form 483 shall be turned in to the Contracting Officer before final payment will be made.

11.6.8 If a crane is required for construction on the airfield, the contractor must store the crane in such a manner as to not pose a hazard to flight operations. The contractor must contact, through the inspector, 78 OSS, 926-2114, to receive instructions on how to store the crane each night. In addition, any crane activity on the airfield will require a waiver from the 78 ABW commander prior to starting work. Submit in writing a schedule for such work, the hours of operation, height of the crane, and location of the crane, to the contracting officer 45 days prior to the start of the work. The contracting officer will work with the Civil Engineering Community Planner, 63533 Ext 173 to obtain this permit.

11.6.9 Prior to the start of work each day, the contractor shall proceed to Airfield Management Operations and advise them of the current work schedule, location and duration of work, and the type of equipment at the site for the day. The contractor shall also stop at Airfield Management Operations to inform them the work for the day is completed.

11.6.10 The contractor shall furnish a schedule to the Contracting Officer on the anticipated work schedule for each area in the contract.

11.6.11 The contractor shall obtain approval of Airfield Ops for the storage sites for all equipment and materials used on the contract.

11.6.12. The contractor shall provide continuous cleanup at the work site. All areas shall be kept so clean as to prevent the spread of materials that may be tracked into other aircraft areas or which may be windblown in such a way as to cause a hazard to aircraft traffic. Materials will not be allowed to accumulate in such a manner as to create an eyesore. The contractor shall be required to clean all haul routes as required to maintain aircraft safety and site order.

- End of Section -

SECTION 01012

DESIGN AFTER AWARD
(DESIGN/BUILD)
01/2002

1. GENERAL

The Contractor shall furnish and be responsible for a complete set of design documents as called for in Section 01010, GENERAL PROJECT DESCRIPTION AND DESIGN REQUIREMENTS and as called for hereinafter.

1.1 Within 15 days after Notice to Proceed (NTP), the Contractor shall submit, for approval, a complete design schedule with all submittals and review times indicated in calendar dates. The Contractor's schedule shall have the same duration as the schedule the Contractor submitted in the Contractor's proposal during the solicitation evaluation phase. The Contractor shall update this schedule monthly. No design submittals will be reviewed or evaluated until after receipt and acceptance of the proposed design/review schedule. As a minimum, design submittals are required at the preliminary (60%), final (100%), at the design complete (corrected final), revised corrected final, and as-built stages. The requirements of each design stage are listed hereinafter. The Contractor shall reflect the number and schedules for the design submittals phases in the progress charts. As a minimum, the 60%, 100%, and design complete submittals shall each be made in one consolidated package, which includes each of the major categories listed in paragraph "Contents of Design Submittals."

1.2 To facilitate fast-track design-construction activities the Contractor may submit a 100% Site/Utility Design as the first design submittal. This submittal shall also include 100% Design for the Building 44 renovations. Following review, resolution, and incorporation of all Government comments, and submittal of a satisfactory set of site/utility design documents, the Contracting Officer shall issue a limited Notice to Proceed (NTP), within 5 working days of said activities, which shall allow the Contractor to proceed with site development activities within the parameters set forth in the accepted design submittal. Submittal review, comment, and resolution times from this specification apply to this initial 100% Site/Utility Design Submittal. No onsite construction activities shall begin prior to receipt of a construction NTP by the Contractor.

1.3 The Contractor shall submit the design of the buildings at different stages of design to the Government for review. The drawings shall be grouped by building, each set complete by itself. All submittals required at each stage of design shall be submitted as a complete package at one time. No partial submittals will be reviewed.

2. DESIGNER OF RECORD

The Contractor shall identify, for approval, the Designer of Record for each area of work. One Designer of Record may be responsible for more than one area. A listed, registered Designer of Record shall account for all areas of design disciplines. The Designer(s) of Record shall stamp, sign, and date all design drawings, including vendor drawings and calculations – which will be stamped to indicate correctness, compliance with the RFP and completely coordinated with the overall design, under their responsible discipline at each design submittal stage.

3. DEFINITION OF DESIGN SUBMITTALS

3.1 Corrected Proposal Submittal

The Contractor shall submit 10 copies of corrected drawings and technical proposal notebooks which incorporate any corrections on clarification items or deficiencies noted during negotiations for distribution to the Users and Government agencies. Submit the drawings in half size to the project manager within 30 days after contract award. This item only applies to the successful proposer after contract award, and only if there were requests for clarification or deficiencies were noted.

3.2 Site/Utility Design Submittal (100%)

This submittal is provided to allow the Contractor to concentrate initial efforts for the site/utility and existing building renovations and relocation portions of the project. By allowing this work to be separated, the Contractor is given the opportunity to fast track and begin construction on the site/utility work prior to completion of the main building designs. More specific submittal requirements by stage and discipline are identified in the Savannah District Design Manual. This is available on the Internet (under “Engineering Criteria”) at:

http://en.sas.usace.army.mil

This submittal shall consist of the following:

a. Design analysis, developed to 100%, site work, utility work, and Building 44 renovations.

b. 100% complete site/utility drawings.

c. 100% complete Building 44 drawings.

d. Not used.

c. Final site/utility specifications.

d. Environmental permits, as required. When environmental permits are not required, the Contractor shall provide a statement with justification to that effect.

3.3 Preliminary Conformance Review Submittal (60%). This submittal is intended to insure that the Contractor's design is proceeding in accordance with the terms of the solicitation and the Contractor's original proposal as well as in a timely manner. This submittal shall consist of the following:

a. Design analysis including calculations, developed to 60%.

b. 60% complete drawings.

c. Draft specifications.

d. Site utility design information need not be included in this submittal package except where interface to the interior building systems is required.

3.4 Final Design Submittal (100%)

The review of this submittal is to insure that the design is in accordance with directions provided the Contractor during the design process as well as the original solicitation and the Contractor's proposal and to insure the

contractor's equipment selections have been incorporated into the design. The Contractor shall submit the following documents for Final Design Review:

3.4.1 60% review comments and responses annotated.

3.4.2 The Design Analysis submitted for Final Design Review shall be in its final form. The Design Analysis shall include all backup material previously submitted and revised as necessary. All design calculations shall be included. The Design Analysis shall contain all explanatory material giving the design rationale for any design decisions which would not be obvious to an engineer reviewing the final drawings and specifications.

3.4.3 The contract drawings submitted for Final Design Review shall include the drawings previously submitted which have been revised and completed as necessary. The Contractor is expected to have completed all of his coordination checks and have the drawings in a design complete condition. The drawings shall be complete at this time including the incorporation of any design review comments generated by the previous design reviews. The drawings shall contain all the details necessary to assure a clear understanding of the work throughout construction. Shop drawings will not be considered as design drawings. All design shall be shown on design drawings prior to submittal of shop drawings. Each discipline has unique Final Design submittal requirements. Respective chapters of the Savannah District Design Manual should be reviewed to determine the exact nature of these requirements.

Example for HVAC Controls: HVAC Controls System Drawings (MC-Plates) shall be submitted at the final design stage and shall include the following.

HVAC Controls System Legend
Control System Schematic
Equipment Schedule
Valve Schedule
Damper Schedule
Sequence of Operations
I/O Summary table and Data Terminal Strip Diagram
Wiring Diagram
Communications Network and Block Diagram
Metering of Utilities (gas, electrical and water)
DDC Panel locations

The control drawings shall use the Corps of Engineers standard control drawings. These drawings are available at the following website: http://www.sas.usace.army.mil/eng/hvac/ or on the SAS_STD CD available from the project manager.

3.4.4 The draft specifications on all items of work submitted for Final Design Review shall consist of legible marked up guide specification sections.

3.4.5 Site utility design information need not be included in this submittal package except where interface to the interior building systems is required.

3.5 Design Complete Submittal (Corrected Final)

After the Final Design Review, the Contractor shall revise the Contract Documents by incorporating any comments generated during the Final Design Review and shall prepare final hard copy Contract Specifications. The Contractor shall submit the following documents for the design complete submittal:

3.5.1 Design analysis, in final 100% complete form.

3.5.2 100% complete drawings.

3.5.3 Final specifications.

3.5.4 Final review comments and annotated responses with appropriate references to change location in Drawing/Specifications and or Calculations.

3.5.5 Electronic Submission.

All CADD files in Native Microstation, plus AutoCAD translation, as well as all prepared technical specifications shall be provided on CD-ROM. See Section 5.0 for the number of copies required.

3.6 Structural Interior Design (SID).

3.6.1 Definition: The Structural Interior Design (SID) shall involve the selection and sampling of all applied finishes including material(actual mfr data), color, texture and patterns necessary to complete the building's interior architectural features. This information shall be submitted in 3-inch D-ring binders, 8-1/2 inch x 11-inch format.

3.6.2 Present architectural finish samples in an orderly arrangement according to like rooms/areas receiving like finishes. Each like room receiving like finishes will be noted as a Color Scheme. Each Color Scheme shall have a written description of material used. This written description shall use the same material abbreviations and notes that appear on the Room Finish Schedule and Legend in the contract drawings. Submit the SID binders concurrently with the architectural design submittals.

3.6.3 Preliminary Submittals: The Contractor shall submit three complete sets of the initial SID package. The design philosophy shall use a warm neutral background color with appropriate accent colors. All SID proposals shall be reviewed and approved by the Government. The Interior Designer shall revise the SID binders after each review and update the SID to satisfy review comments. Each submittal will follow this method of review until the Government approves the completed SID package.

3.6.4 Final Submittal: After approval of the Preliminary Submittal, the Contractor shall submit three complete sets of the approved and final Structural Interior Design packages. Once the Contractor has submitted the SID and the Government has approved the submittal, all materials, finishes, colors, textures and pattern submitted and approved for this project are then considered as part of the contract and the Contractor shall furnish all approved SID finishes. No deviations will be considered.

3.6.5 Format: Submit all SID information and samples on 8 1/2"x 11" modules with only one foldout. The maximum foldout width shall be approximately 25 inches. No foldouts on the top or bottom of the pages. Place the project title, base, architectural firm, page number and date on the bottom of each page or module.

3.6.5.1 The module shall support and anchor all samples. Anchor large or heavy samples with mechanical fasteners, velcro or double sided foam tape. Rubber cement or glue will not be acceptable.

3.6.5.2 Assemble the 8-1/2 inch x 11 inch pages and modules in a 3 inch D-ring binder. Holes for placement of the modules in the binder shall be 3/8 inch in diameter. Each binder shall be identified on the outside spine and front cover by title, project number, percentage phase and date.

3.6.5.3 Material and finish samples shall indicate true pattern, color and texture. Carpet samples shall be large enough to indicate a complete pattern or design.

3.6.5.4 In addition to paint manufacturers' color names and numbers indicate the finish of the paint such as gloss, semi-gloss, flat and so on.

3.6.5.5 Signage may include emblems, striping, letters, numbers and logos. The interior designer shall consider visual appearance, organization, location, structural supports (if required) and relation to other base graphics. Indicate on a separate signage sheet the location and message for all signage. Submit a sample of the signage material finish and color with the structural finishes.

3.6.5.6 No photographs or colored photocopies of materials will be accepted or approved.

3.6.6 The SID binder shall include the following information at each design submittal in this order:

==========

SEQUENCE OF SID SUBMITTAL

1. Title page

2. Table of contents

3. Design objectives - A statement of design objectives explaining the interior design philosophy of the facility shall be provided in the SID. Design objectives and the proposed method of accomplishing the objectives. Shall cover, when applicable, energy efficiency, safety, health, maintenance, image, personal performance of occupants and functional flexibility.

4. Interior floor plan

5. Interior sample finish boards (Color boards)

Scheme A
Scheme B
Scheme C

Example all restrooms could be noted as color scheme "A", all general open office finishes could be noted as color scheme "B" and the main lobby could be noted as color scheme "C".

6. Room finish schedule

7. Signage

8. Signage plan

9. Integration and layout of ACSIM specific furniture. Plan must show suitability of proposed space to suit the furniture to be provided.

==========

3.7 Comprehensive Interior Design (CID).

3.7.1 The preparation of the Comprehensive Interior Design is part of the Base Bid. The procurement of the items specified in the Comprehensive Interior Design will be accomplished separate from this contract. The CID submittals shall be in accordance with the Savannah District Interior Design Presentation Format – Appendix M. The furniture shall be coordinated with the prepared and approved Furniture Placement drawings developed in the SID package. Installation shall include scheduling shipments from vendors, accepting delivery at the site, unloading, inventorying, securing and installing the items.

3.7.2 Preliminary Submittals: The Contractor shall submit three complete sets of the initial CID package. All CID proposals shall be reviewed and approved by the Government. The Interior Designer shall revise the CID binders after each review and update the CID to satisfy review comments. Each submittal will follow this method of review until the Government approves the completed CID package.

3.7.3 Final Submittal: After approval of the Preliminary Submittal, the Contractor shall submit three complete sets of the approved and final Structural Interior Design packages. Once the Contractor has submitted the CID and the Government has approved the submittal, all materials, finishes, colors, textures and pattern submitted and approved for this project are then considered as part of the contract and the Contractor shall furnish all approved CID finishes. No deviations will be considered.

4. GOVERNMENT APPROVED DESIGN SUBMITTALS

The approval of submittals by the Contracting Officer shall not be construed as a complete check, but will indicate only that the design is in conformance with the contract requirements. Approval will not relieve the Contractor of the responsibility for any error which may exist, as the Contractor is responsible for the design and construction of all work.

5. MAILING OF SUBMITTALS

All submittals to the Government during design shall be mailed using overnight mailing service. Each copy of the submittals shall be mailed to the addresses listed below. Each submittal shall have a transmittal letter accompanying it that indicates the date, design percentage, type of submittal, list of items submitted, transmittal number and point of contact with telephone number.

Addresses and submittal distribution:

1. U.S. Army Engineer District, Savannah
   ATTN: CESAS-PM-MR/Leslie Zuniga
   100 W. Oglethorpe Avenue
   P.O. Box 889
   Savannah, GA 31402-0889

2. U.S. Army Corps of Engineers,
   Attn: CESAS-CD-RO (Richard Powers)
   Area Engineer Office
   625 Seventh Street, Bldg. 702
   Robins AFB, GA 31098

3. 778CES/CECM
   ATTN: Jerry Thovson
   Bldg 321, 235 Robins Parkway
   Robins AFB, GA 31098

4. AFMC CES/CECC
ATTN: Douglas Langley
4225 Logistics Ave., Bldg. 266, Room A107
Wright-Patterson AFB, OH 45433-5746

5. HQ AFCESA/CESM
ATTN: Gerald Doddington
139 Barnes Drive, Suite 1
Tyndall AFB, FL 32403-5319

The following table lists the number of copies of design submittal requirements for this project:

(1) **Corrected Proposal**
COE 10 1/2 Size drawings
SAS 10 Revised Proposal Notebooks

	# Item 60%	# Item Final	# Item Corrected Final
(1)	18 Design Anal.	13 Design Anal.	13 Design Anal.
COE	5 ½ Size Dwg.		
	13 Full Size Dwg.	13 Full Size Dwg	13 Full Size Dwg
SAS	18 Spec.	13 Spec.	13 Spec.
		13 Ann. Comments	13 Ann. Comments
	1 Permit Appl.	2 Permit Docum.	2 CD of Submittal
	1 SID	1 SID	
	1 CID	1 CID	
	3 CD of Submittal	2 CD of Submittal	
(2)	3 Design Anal.	2 Design Anal.	2 Design Anal.
CD-RO	4 ½ Size Dwg.	4 ½ Size Dwg.	10 ½ Size Dwg.
	2 Full Size Dwg.	2 Full Size Dwg.	2 Full Size Dwg.
	4 Spec.	4 Spec.	8 Spec.
		2 Ann. Comments	5 Ann. Comments
	2 Permit Appl.	2 Permit Docum.	
	1 SID	1 SID	2 CD's w/ all electronic files
	1 CID	1 CID	
(3)	5 Design Anal.	5 Design Anal.	2 Design Anal.
778 CES	5 Drawings	5 Drawings	2 Drawings
	5 Spec.	5 Spec.	2 Spec.
		2 Ann. Comments	2 Ann. Comments
	2 Permit Appl.	2 Permit Docum.	2 Permit Docum.
	1 SID	1 SID	3 CD's w/all electronic files
	1 CID	1 CID	
(4)	1 Design Anal.	1 Design Anal.	1 Design Anal.
AFMC	1 ½ Drawings	1 ½ Drawings	1 ½ Drawings
CES/CECC	1 Spec.	1 Spec.	1 Spec.
		1 Ann. Comments	1 Ann. Comments
(5)	1 Design Anal.	1 Design Anal.	1 Design Anal.
AFCESA	1 Drawings	1 Drawings	1 Drawings
	1 Spec.	1 Spec.	1 Spec.
		1 Ann. Comments	1 Ann. Comments

(2) **Revised Corrected Final Design Submittal (note 1)**

CD-RO 10 1/2 Size drawings
2 Full Size Drawings
6 Specifications
2 Design Analysis
2 CD of complete Submittal (specifications, design analysis, drawings, specifications, catalog cuts, etc.)

6. GOVERNMENT REVIEWS

The Government will take 21 days to review and comment on each design submittal. For each design review submittal, the COR will furnish, to the Contractor, a single consolidated listing of all comments from the various design sections and from other concerned agencies involved in the review process. The review will be for conformance with the technical requirements of the solicitation and the Successful Offeror's (Contractor's) RFP proposal. If the Contractor disagrees technically with any comment or comments and does not intend to comply with the comment, he must clearly outline, with ample justification, the reasons for noncompliance within 5 days after receipt of these comments in order that the comment can be resolved. The Contractor shall furnish disposition of all comments, in writing, with the next scheduled submittal. The Contractor is cautioned in that if he believes the action required by any comment exceeds the requirements of this contract, that he should take no action and notify the COR in writing immediately. Review conferences will be held for each design submittal at the Installation. The Contractor shall bring the appropriate design staff to the review conference. These conferences will take place the week after the receipt of the comments by the Contractor.

ProjNet/DrChecks is the required method for preparing and annotating comments. This is an Internet based database available on the Internet at:

http://65.204.17.188/projnet/home/version1/

User ID and password will be granted at the submittal stage.

6.1 If a design submittal is late by the approved schedule, the review will slip accordingly. The review process will not be shortened. Submittals date revisions must be made in writing at least 1 week prior to effect the submittal.

6.2 Post review conference action: Copies of comments, annotated with comment action agreed on, will be made available to all parties before the conference adjourns. Unresolved problems will be resolved by immediate follow-on action at the end of conferences. Valid comments will be incorporated. After receipt of final corrected design documents upon incorporation of backcheck comments the Project Manager will recommend issuance of a Construction Notice to Proceed (NTP). The Government, however, reserves the right to disapprove design document submittals if comments are significant. If final or backcheck submittal(s) are incomplete or deficient, and require correction by the Contractor and resubmittal for review, the cost of rehandling and reviewing will be deducted from payment due the Contractor at the rate of $5,000.00 per submittal, as determined by the Contracting Officer

7. COORDINATION

7.1 Written Records

The Contractor shall prepare a written record of each design site visit, meeting, or conference, either telephonic or personal, and furnish within 5 working days copies to the Contracting Officer and all parties involved. The written record shall include subject, names of participants, outline of discussion, and recommendation or conclusions. Number each written record for the particular project under design in consecutive order.

7.2 Design Needs List

Throughout the life of his contract the Contractor shall furnish the COR a monthly "needs" list for design related items. This list shall itemize in an orderly fashion design data required by the Contractor to advance the design in a timely manner. Each list shall include a sequence number, description of action item, name of the individual or agency responsible for satisfying the action item and remarks. The list will be maintained on a continuous basis with satisfied action items checked off and new action items added as required. Once a request for information is initiated, that item shall remain on the list until the requested information has been furnished or otherwise resolved. Copies of the list will be mailed to both the Administrative Contracting Officer and the agencies tasked with supplying the information. It is highly recommended that the Corps' RFI system be utilized during the design phase for this purpose. The system has report capability. User access and passwords will be furnished at the time needed with over the phone instructions.

8. DESIGN ANALYSIS

8.1 Media and Format

Present the design analysis on 8-1/2 inch by 11 inch paper except that larger sheets may be used when required for graphs or other special calculation forms. All sheets shall be in reproducible form. The material may be typewritten, hand lettered, handwritten, or a combination thereof, provided it is legible. Side margins shall be 1-inch minimum to permit side binding and head to head printing. Bottom margins shall be 1-1/4 inches, with page numbers centered 1 inch from the bottom.

8.2 Organization

Assign the several parts and sheets of the design analysis a sequential binding number and bind them under a cover indicating the name of the facility and project number, if applicable. The title page shall carry the designation of the submittal being made. Each submittal shall contain an executive summary. The complete design analysis presented for final review with the final drawings and specifications shall carry the designation "FINAL DESIGN ANALYSIS" on the title page.

8.3 Design Calculations

Design calculations are a part of the design analysis. When they are voluminous, bind them separately from the narrative part of the design analysis. Present the design calculations in a clean and legible form incorporating a title page and index for each volume. Furnish a table of contents, which shall be an index of the indices, when there is more than one volume. Identify the source of loading conditions, supplementary sketches, graphs, formulae, and references. Explain all assumptions and conclusions. Calculation sheets shall carry the names or initials of the author and the checker and the dates of calculations and checking. No portion of the calculations shall be computed and checked by the same person.

8.4 Automatic Data Processing Systems (ADPS)

When ADPS are used to perform design calculations, the design analysis shall include descriptions of the computer programs used and copies of the ADPS input data and output summaries. When the computer output is large, it may be divided into volumes at logical division points. Precede each set of computer printouts by an index and by a description of the computation performed. If several sets of computations are submitted, they shall be accompanied by a general table of contents in addition to the individual indices. Preparation of the description which must accompany each set of ADPS printouts shall include the following:

a. Explain the design method, including assumptions, theories, and formulae.
b. Include applicable diagrams, adequately identified.
c. State exactly the computation performed by the computer.
d. Provide all necessary explanations of the computer printout format, symbols, and abbreviations.
e. Use adequate and consistent notation.
f. Provide sufficient information to permit manual checks of the results.

9. DRAWINGS

9.1 Prepare all drawings on Computer-Aided Design and Drafting (CADD) so that they are well-arranged and placed for ready reference and so that they present complete information. The Contractor shall prepare the drawings with the expectation that the Corps of Engineers, in the role of supervision, will be able to construct the facility without any additional assistance from the Contractor. Drawings shall be complete; unnecessary work such as duplicate views, notes and lettering, and repetition of details shall not be permitted. Do not show standard details not applicable to the project, and minimize unnecessary wasted space. Do not include details of standard products or items which are adequately covered by specifications on the drawings. Detail the drawings such that conformance with the RFP can be checked and to the extent that shop drawings can be checked. Do not use shop drawings as design drawings. The Contractor shall use standard Corps of Engineers title blocks and borders on all drawings. Submit an index of drawings with each submittal. The COR will furnish the Contractor file number, drawing name prefix, and specifics for inclusion in the title blocks of the drawings.

9.2 Create all drawings using CADD methods in MicroStation format. Save all Design Complete CADD files as MicroStation J or later version. The Contractor shall use Tri-service Standard as guidance for standard details, cell libraries, title blocks, and layer/level assignments.

9.3 Only standard fonts provided by MicroStation are allowed to be used in the creation of CADD files. No fonts created by third parties or the designer are permitted.

9.4 The uses of reference files and model files during the design stage is up to the discretion of the designers. All CADD files at Design Complete submittal shall be in separate folders by discipline or building, free standing, independent files by folder. All reference files shall be in the same folder as the design files. Example of folders, Civil, Building 1, Building 2, etc. Model files required: Floor plan arch, piping, HVAC, Reflect CLG. Other floor plans are desirable as model files, but not required to be model files.

9.5 Submit all Design Complete CADD files on read/write CD-ROM disk.

10. SPECIFICATIONS

10.1 The Contractor shall submit marked-up and final specifications as required. For items which were submitted during the solicitation phase as a piece of specific equipment, and approved, the specification for that item can have the products portion of the specification deleted. The approved equipment data sheet will be serve the purpose of the product definition. The specifications shall be Unified Facilities Guide Specifications (UFGS). Edit the specifications for this project and submit in marked up or redlined draft version at the Final Review submittal stage. If the design is based on a specific product, the specification shall consist of the important features of the product. The specification shall be detailed enough such that another product meeting the specification could be substituted and it would not adversely impact the project. After incorporation of comments, submit a final, design complete specification package. Delete all marked out or redlined text and type in all inserted text. Unified Federal Guide Specifications (UFGS) and Savannah District Guide Specifications are available on the Internet at:

http://www.hnd.usace.army.mil and http://en.sas.usace.army.mil/

Specsintact software is available free of charge at:

http://si.ksc.nasa.gov/specsintact

These specifications shall be edited and tailored by the Contractor to meet the requirements of the project under design.

10.2 Submittal Register

Develop the construction submittal requirements during the design phase of the contract. In general, any product specifically included in the design will not require re-submittal during construction. List the submittal requirements in paragraph SUBMITTALS of each specification section. The SPECSINTACT program generates a submittal register from these paragraphs. Include this register at the end of Section 01330 SUBMITTAL PROCEDURES (DESIGN BUILD). The Contractor shall be responsible for listing all required submittals necessary to insure the project requirements are complied with. The submittals paragraph shall identify submittal items such as shop drawings, manufacturer's literature, certificates of compliance, material samples, guarantees, test results, etc. that the Contractor shall submit for review and/or approval action during the life of the construction contract.

11. CONTENTS OF DESIGN SUBMITTALS

11.1 100% Site/Utility Design Submittal

The 100% site/utility design submittal shall contain as a minimum, but not limited to – as this section provides a general list and the Contractor shall included all systems and elements required but which may not be listed, the following:

11.1.1 General Narratives

11.1.1.1 Site/Layout

Explanation of objectives and factors influencing siting decisions. General overview of major site features planned, such as building orientation, drainage patterns, parking provisions, traffic circulation, provisions for the handicapped, security requirements, etc. Rationale for locating major site elements. Set back requirements or specific clearance requirements. Locations of borrow and spoil areas.

11.1.1.2 Utility Systems

Design narrative for the natural gas, water supply, storm drainage, compressed air, industrial waste, and wastewater systems relating to this project. Include an analysis of the existing distribution systems capability to supply sufficient quantity at adequate levels. If the existing distribution systems are inadequate, provide the design solution to augment the systems to provide the requirements for the new facilities.

11.2 Drawings

All drawings included in the required technical data and appropriate details for the proposal submission (see Contract Clause, PHASE 2 PROPOSAL SUBMISSION INSTRUCTIONS) shall be developed to 100 percent completion. In addition to the individual utility plans, submit a combined utility plan drawn to the same scale as the individual utility plans.

11.2.1 General Site Layout

Scale shall be included. A pavement jointing shall be provided either as included in the general site layout drawings or as a separate drawing. In the event that the drawing is included on the general site layout drawings the information shall be clearly presented and detailed to illustrate the types of joints, reinforcing (if required), and other pavement features.

11.2.2 Site Grading and Drainage Plans

Show locations of all sediment basins, diversion ditches, and other erosion control structures. Indicate the approximate drainage areas each will service. Indicate the materials, construction and capacity of each structure. Include limits of landscaping and seeded areas. General site grading and drainage shall be indicated by contour lines with an interval of not more than approximately 1 foot [300mm].

11.2.3 Road Alignment Plans

Scale shall be no greater than 1"=30' and profiles showing pavement and shoulder widths, azimuths and curve data, limits of grading, and erosion control. The materials to be used shall be indicated.

11.2.4 Traffic Control Plan

Traffic routing and signage shall be in accordance with The Manual on Uniform Traffic Control Devices for Streets and Highways, U.S. Department of Transportation, Federal Highways Administration.

11.2.5 Parking Lots

Show the actual dimensions of parking lots and measurements from a known reference point rather than coordinates at corners. Show the number of parking spaces.

11.2.5 Sanitary Sewer Plan and Industrial Waste Plan

Scales shall be 1"=30' and profiles showing location and elevation of pipe, thrust blocks, manholes, etc. Each system shall be shown on separate drawings. Materials and construction of main and appurtenances shall be indicated. Specifications shall be provided.

11.2.6 Water Supply Line, Natural Gas and Compressed Air Plans

Scales shall be 1"=30' and profiles showing locations of valves, thrust blocks, connections, etc. Each system shall be shown on a separate set of plans. Materials shall be indicated and specifications shall be provided for valves, pipes, etc.

11.2.7 Electrical Plan Requirements

11.2.7.1 Required diagrams and details on Site Electrical Drawings.

a. On-Site Electrical Distribution Plan.
b. On-Site One Line Diagram.
c. On-Site Distribution Transformer Schedule: Provide with the following headings:
   Transformer Designation.
   Transformer Size (KVA).
   Building(s) Served.
   Primary Phase(s) and Circuit to which connected.
d. On-Site Details (Site Lighting, Trenching, Facility Transformers, etc.).

11.2.8 Specifications

Provide final specifications which include all sections which apply to site/utility work.

11.2.9 Design Analysis

Design analysis shall include design calculations fully developed to support the design of the site and utility systems included in this submittal.

11.2.10 Geotechnical

11.2.10.1 Government-Furnished Information

The geotechnical information furnished by the Government is for information only and provides conservative values for foundation soil bearing capacity, K (rigid pavement) value and CBR (flexible pavements) for contractors to base their bids on. The Contractor is responsible for doing his own geotechnical work for the actual design to verify the values provided by the Government.

11.2.10.2 Report

Three copies of the geotechnical report prepared by the Contractor’s consulting geotechnical engineer shall be submitted. The report shall be specific to the geotechnical design requirements and recommendations for the project site.

11.2.10.3 Certification

Written certification from the Contractor and his consulting geotechnical engineer that the design of the project has been developed consistent with the site-specific geotechnical conditions.

11.3 60% Design Submittal

The 60% design submittal shall contain as a minimum, the following:

11.3.2 Landscape, Planting and Turfing

11.3.2.1 The landscape planting design narrative shall describe the analysis of existing site conditions, including an indication of existing plant materials that are to remain on the site. The statement of concept shall

indicate specific site problems related to proposed development and the rationale for proposed plant locations. The narrative shall also include a list of suggested types and sizes of plant materials which are to be used, based upon the designated functional and visual criteria.

11.3.2.2 The drawings shall be prepared at a scale which corresponds with the site layout and grading plans and, likewise, shall include reference coordinates, north arrows, graphic scales and appropriate legends. An overall planting layout shall be developed and shall include enlarged detail plans of specific areas, as needed, to clarify requirements. The proposed layout shall indicate shade trees, evergreen trees, flowering trees, shrub masses, etc., according to designated functional and visual locations of planting. A legend which also indicates sizes of plants recommended for each of the above categories shall be included. The drawings and all subsequent plans shall indicate existing and proposed buildings, paved areas, signs, light standards, transformers, dumpster areas, storm drainage system, and other structures and utilities.

11.3.3 Architectural

11.3.3.1 Design narrative shall provide a summary of functional space relationships, as well as circulation. There shall also be a general statement for the rationale behind the major design decisions.

11.3.3.2 Architectural Floor Plans shall indicate dimensions, columns lines, and detail references. Toilets and other specialized areas shall be drawn to 1/4" scale and shall show any needed interior features.

11.3.3.3 Finish schedule shall indicate material, finishes, colors and any special interior design features such as soffits, fascias, and lighting troughs, etc.

11.3.3.4 All required equipment shall be shown on the drawings with an equipment list.

11.3.3.5 List any special graphics requirements that will be provided.

11.3.3.6 Schedules shall be provided for both doors and windows. These schedules shall indicate sizes, types, and details for all items shown on floor plans.

11.3.3.7 Hardware sets using BHMA designations.

11.3.3.8 SID package.

11.3.3.9 Fire Protection and Life Safety Analysis. This analysis must be performed by a Registered Fire Protection Engineer (FPE). NICET certification is not sufficient to address this requirement.

11.3.4 Structural Systems

11.3.4.1 State the live loads to be used for design. Include roof and floor loads; wind loads, lateral earth pressure loads, seismic loads, etc., as applicable.

11.3.4.2 Describe the method of providing lateral stability for the structural system to meet seismic and wind load requirements. Include sufficient calculations to verify the adequacy of the method.

11.3.4.3 Furnish calculations for all principal roof, floor, and foundation members.

11.3.4.4 This submittal shall include drawings showing roof and floor framing plans as applicable. Principal members shall be shown on the plans. A foundation plan shall also be furnished showing main footings and grade beams where applicable. Floor slabs shall be detailed in accordance with TM 5-800-12. Construction, contraction, and control joints shall be spaced to control cracking. Where beam, column, and footing schedules are used, show schedules and fill in sufficient items to indicate method to be used. Show typical bar bending diagram if applicable. Typical sections shall be furnished for roof, floor, and foundation conditions. Structural drawings for proposals and submittals shall be separate from architectural drawings.

11.3.4.5 Provide any computer analyses used including the “Mathematical Model” used for computer analysis. Mathematical model will consist of computer analysis input including images and labels such that the government can track the specific member design from computer input to visual location in the structure to the analysis output. The software shall be widely accepted, commercially available programs and complete documentation of the input and output of the program must be provided.

11.3.4.6 Provide complete seismic and wind analysis for all structural components analyses for all building structural components. Seismic and wind calculations shall clearly demonstrate compliance with all requirements set forth in this RFP.

11.3.4.7 Execution of Structural Design

The structural design performed by subcontractor (structural steel, roof joist, roof deck, hangar doors, etc.) shall be reviewed by Design/Build team for established Design Load criteria and proper application thereof, serviceability, constructability, and coordination with all of the design disciplines. Upon completed Design/Build team review, design shop drawings and/or design calculations shall be submitted to Government

11.3.5 Plumbing Systems

11.3.5.1 List all references used in the design including Government design documents and industry standards.

11.3.5.2 Provide justification and brief description of the types of plumbing fixtures, piping materials and equipment proposed for use.

11.3.5.3 Prepare detail calculations for systems such as sizing of domestic hot water heater and piping and natural gas piping.

11.3.5.4. Indicate locations and general arrangement of plumbing fixtures and major equipment.

11.3.5.5 Include plan and isometric riser diagrams of all areas including hot water, cold water, waste and vent piping. Piping layouts and risers should also include natural gas (and meter as required), and other specialty systems as applicable.

11.3.5.6 Include equipment and fixture connection schedules with descriptions, capacities, locations, connection sizes and other information as required.

11.3.6 Fire Protection/Suppression

11.3.6.1 List all references used in the design including Government design documents and industry standards used to generate the fire protection analysis.

11.3.6.2 Classify each building in accordance with fire zone, building floor areas and height and number of stories. This information shall be contained in the fire protection analysis.

11.3.6.3 Discuss and provide description of required fire protection requirements including extinguishing equipment, detection equipment, alarm equipment and water supply. Alarm and detection equipment shall interface to requirements of electronic systems. This information shall be contained in the fire protection design analysis.

11.3.6.4 Prepare a plan for each floor of each building that presents a compendium of the total fire protection features being incorporated into the design. Provide the following types of information:

The location and rating of any fire-resistive construction such as occupancy separations, area separations, exterior walls, shaft enclosures, corridors, stair enclosures, exit passageways, etc.

The location and coverage of any fire detection systems.

The location and coverage of any fire suppression systems (sprinkler risers, standpipes, etc.).

The location of any other major fire protection equipment.

Indicate any hazardous areas and their classification.

11.3.6.5 Prepare a schedule describing the internal systems with the following information: fire hazard and occupancy classifications, building construction type, GPM/square foot sprinkler density, area of operation and other as required.

11.3.6.6 Hydraulic calculations based on water flow test shall be prepared for each sprinkler system to insure that flow and pressure requirements can be met with current water supply. Include copies of Contractor water flow testing done to certify the available water source.

11.3.7 Electronic Systems: Electronic Systems responsibilities include the following:

Fire Detection and Alarm System
Fire Suppression System Control
Public Address System
Telephone System
Special Grounding Systems
Cathodic Protection

11.3.7.1 The design analysis shall include all calculations required to support design decisions and estimates at this stage of design. The analysis shall include specific criteria furnished, conference minutes and cost analyses of all systems considered.

11.3.7.2 Design of the fire alarm and detection system shall include layout drawings for all devices and a riser diagram showing the control panel, annunciator panel, all devices, radio transmitter and interfaces to other systems (HVAC, sprinkler, etc.).

11.3.7.3 Specify all components of the fire suppression (FS) system in the FS section of the specifications. Provide a clear description of how the system will operate and interact with other systems such as the fire alarm system. Include a riser diagram on the drawings showing principal components and interconnections with other systems. Include FS system components on drawing legend. All components shown on floor plans shall be designated as FS system components (as opposed to Fire Alarm components). Show the location of FS control panels, HVAC control devices, sensors, and 120V power panel connections on the floor plans. Indicate zoning of areas by numbers (1, 2, 3) and detectors subzoned for cross zoning by letter designations (A and B). Differentiate between ceiling mounted and underfloor detectors with distinct symbols and indicate subzone of each.

11.3.7.4 Show location of telephone outlets (including pay phones) on the plans. Include legend and symbol definition to indicate height above finished floor. Show Telephone Conduit System Riser Diagram. Size conduit on Riser Diagram. Do not show conduit runs between backboard and outlets on the floor plans. Underground telephone distribution conduit shall be shown on either the electrical or electronic site plan.

11.3.7.5 Grounding System

The specifications and drawings shall completely reflect all of the design requirements. The specifications shall require field tests in the construction phase, witnessed by the Contracting Officer, to determine the effectiveness of the grounding system. The design shall include drawings showing existing construction. Verification of the validity of any existing drawings and/or any other data furnished by the Government shall be the responsibility of the engineering services firm.

11.3.7.6 Provide a statement describing the extent of any exterior electrical and communications work such as telephone lines, duct banks, etc.

11.3.7.7 Provide the name of the licensed corrosion engineer or NACE specialist. Provide the following for cathodic protection systems:

Clearly define areas of structures or components in soil or water to be protected.
Type system recommended, comparison of systems, cost estimates showing all equipment alternatives.

Calculations on all systems that are considered showing all information and descriptions.

11.3.7.7.1 Design of Cathodic Protection

The design shall clearly provide a thorough and comprehensive specification and drawing. The design plans and specifications shall show extent of the facilities to be protected, location and type of anodes, location of test points, details for sectionalizing an underground piping system. This design shall be complete enough to purchase equipment and build without design changes to meet criteria of protection.

11.3.7.8 Exterior work to be shown on electrical site plan.

Existing and new communications service lines, both overhead and underground, shall be properly identified.

Show removals and relocations, if any.

11.3.7.9 Provide a descriptive narrative of all electronic systems that are required for project. Define any hazardous areas as defined in the National Electrical Code and indicate the type of equipment proposed for use in such areas. Show the location of all electronic system panels, etc., on the floor plans. Show the proposed riser diagrams for all systems. Show sizes of all conduit, wires, cables, panels, etc. Provide a complete symbol legend for all devices or equipment shown on the plans. For work requiring removals or demolition, the designer shall show by use of drawings or narrative, how demolition work is to be done.

11.3.8 Electrical, Mechanical, and Process Systems

Provide all information as required in the 100% design submittal developed to 60% completion.

11.3.9 Specifications

Draft of specifications for the entire project.

11.3.10 Accessibility/Maintainability

Provide a narrative explaining the accessibility/maintainability features of the facility. Cross-reference this to the drawings. Include equipment clearances, hoists, freight elevators, removable walls, and all other features needed to access, service, repair and replace equipment; including but not limited to filters, coils, fans, boilers, chillers, and compressors

11.3.11 Use AFMC Form 299 to perform a safety assessment review on the facility. Include an operation risk assessment on those factors that are a concern. Comply with AFI 91-213 & AFPAM 91-215. Any risks higher than 10 on the risk assessment matrix require government approval of risk, or must be reduced below 10.

11.4 100% Design Submittal

The 100% design submittal shall contain, as a minimum, the following items for all submittals:

11.4.1 General

A complete set of construction documents, plans and specifications at the same level of detail as if the project were to be bid including a complete list of equipment, fixtures and materials to be used. The final drawings are an extension of the reviewed 60% drawings and are to include the 60% comments and responses. All details shall be shown on the drawings.

11.4.2 The design analysis is an extension of the reviewed 60% design analysis and supports and verifies that the design complies with the requirements of the project.

11.4.3 Submit marked up specifications. The specifications shall be coordinated with the drawings and shall describe in detail all items shown on the drawings.

11.4.4 Architectural

11.4.4.1 All architectural drawings shall be coordinated with the other engineering disciplines. Ensure that the plans are in compliance with the applicable codes. It will be the Contractor's responsibility to implement the comments generated from any design review submittal as well as verify the consistency between plans and specification. The evaluation of the

Contractor's submittals shall be based on degree to which the submittal meets the requirements set forth in this document and the specifications.

11.4.4.2 SID package.

11.4.4.3 Fire Protection and Life Safety Analysis

This analysis must be performed by a Registered Fire Protection Engineer (FPE). NICET certification is not sufficient to address this requirement.

11.4.5 Structural Design

11.4.5.1 Furnish complete checked calculations for all structural members including vendor calculations.

11.4.5.2 Prior to this submittal, structural drawings shall be coordinated with all other design disciplines.

11.4.5.3 The final structural drawings shall contain the following information as a set of general notes:

The allowable soil bearing value.
The design stresses of structural materials used.
The design live loads used in the design of various portions of the structures.
The design wind speed.
The seismic parameters used in design.

11.4.5.4 All structural drawings and calculations shall be checked and stamped by the designer of record (a registered Professional Engineer).

11.4.6 Fire Suppression System

Provide 60% design carried forward to 100% design level. Include detailed sprinkler system drawings and hydraulic calculations developed from the 60% design submittal, to a 100% completion level. Provide a file of the input data used in the computer program to design the fire suppression system as well as the output data.

11.4.7 Specific Mechanical and Plumbing Requirements

11.4.7.1 Required Plans, Diagrams, Schedules and Details on Unit Mechanical Drawings

11.4.7.1.1 Mechanical Floor Plan

The floor plans shall show all principal architectural features of the building which will affect the mechanical design. The floor plans shall also show the following:

Room designations.
Mechanical legend and applicable notes.
Location of all ductwork or piping (double line ductwork double line piping over 150mm (6”) diameter in mechanical rooms) required).
Location and capacity of all terminal units (i.e., registers, diffusers, grilles, hydronic baseboards).
Exhaust fans.
Size of all ductwork and piping.
Thermostat location.
Location of heating/cooling plant (i.e., boiler, chiller, cooling tower, etc).

Location of all air handling equipment.
Return air paths (i.e., undercut doors, transfer grilles).
Flue piping size and location.
Piping diagram for forced hot water system (if used).
Controls drawings, including sequence of operation, I/O list, controls schematics, and location of controls devices.

11.4.7.1.2 Equipment Schedule

Complete equipment schedules shall be provided. Schedule shall also include:

Capacity
Electrical characteristics
Efficiency (if applicable)
Manufacturer's name
Optional features to be provided
Physical size

11.4.7.1.3 Details: Construction details, sections, elevations, etc. shall be provided where required for clarification of methods and materials of design. Roof and exterior wall penetrations shall be detailed on the drawings. Roof penetrations shall be held to a minimum.

11.4.7.2 Plumbing Floor Plan: The floor plan shall show all principal architectural features of the building which will affect the plumbing design. Separate plumbing plans will not be required if sufficient information can be shown on the mechanical plans to meet the requirements shown above. The floor plan shall also show the following:

Room designations.
Fixture Schedule.
Location of utility entrances.
Waste and water pipe location and size.
Fixture designations.
Special plumbing systems.

11.4.7.3 Process Systems
*8
Process systems include all systems not covered under the mechanical or plumbing sections. Systems include, but are not limited to:
Dry Media Stripping System (DMSS), supply and recovery.
Wash Rack hot water/soap/rinse system.
Future Teleplatforms (only to the minimum extent necessary to demonstrate that future teleplatforms are installable and meet clearance criteria, and that structure/power exists to support them).
Tail Work Stands.
Breathing air system.
Rinse distribution system.
Medium pressure hot water distribution system.
Hot water/soap washdown distribution system.
Acid storage and distribution system.
Alodine storage and distribution system.
Steam cleaning system.
Paint system.

11.4.7.3.1 Process Floor Plan

The floor plans shall show all principal architectural features of the building and interface points that will affect the process systems design. Separate process floor plans will not be required if sufficient information can be shown on the mechanical, plumbing or structural plans, as applicable,

to meet the requirements shown above. The floor plans shall also show the following:

Room designations.
Legend and applicable notes.
Location of all equipment.
Piping or system plans and detail drawings.
Piping diagram for process systems.
Controls drawings, including sequence of operation, I/O list, controls schematics, and location of controls devices.

11.4.7.3.2 Equipment Schedule

Complete equipment schedules shall be provided. Schedule shall also include:

Capacity
Electrical characteristics
Efficiency (if applicable)
Manufacturer's name
Optional features to be provided
Physical size

11.4.7.3.3 Details: Construction details, sections, elevations, etc. shall be provided where required for clarification of methods and materials of design. Roof and exterior wall penetrations shall be detailed on the drawings. Roof penetrations shall be held to a minimum.

11.4.7.4 Design Analysis

Complete design calculations for mechanical systems. Include computations for sizing PM&E equipment, air duct design, and U-factors for ceilings, roofs and exterior walls and floors. Contractor shall employ commercially available energy analysis techniques to determine the energy performance of all passive systems and features. Use of hourly energy load computer simulation (e.g., TRNSYS, DOE 2.1 Blast, etc.) is required. These calculations can be used to size the mechanical systems. Based on the results of calculations, provide a complete list of the materials and equipment proposed for heating and plumbing, with the manufacturer's published cataloged product installation specifications and roughing-in data. The heating and cooling equipment data shall include the manufacturer's wiring diagrams, installation specifications, ARI certification, and the standard warranty for the equipment.

11.4.8 Specific Electrical Requirements

11.4.8.1 Required Plans, Diagrams, Schedules, and Details on Electrical Drawings:

11.4.8.1.1 Electrical Floor Plan

The floor plans shall show all principle architectural features of the building which will affect the electrical design. The floor plan shall also show the following:

Room designations.
Electrical legend and applicable notes.
Lighting fixtures, properly identified.
Location of fire detectors.
Location of telephone and LAN outlets.
Switches for control of lighting.
Receptacles.
Location and designation of panelboards.

Location, designation and rating of motors and/or equipment which requires electrical service. Show necessary junction boxes, disconnects, controllers (approximate only), conduit stubs, and receptacles required to serve the motor and/or equipment.

11.4.8.1.2 Building One-Line Diagram (from service transformers to distribution panels, panelboards, motor control centers, and equipment)

Indicate the types and sizes of electrical equipment and wiring. Include grounding and metering requirements.

11.4.8.1.3 Panelboard Schedule(s)

Schedule shall indicate the following information:

Panelboard Characteristics (Panel Designation, Voltage, Phase, Wires, Main Breaker Rating and Mounting).
Branch Circuit Designations.
Load Designations.
Circuit Breaker Characteristics. (Number of Poles, Trip Rating, AIC Rating)
Branch Circuit Connected Loads (volt-amperes).
Special Features.

11.4.8.1.4 Lighting Fixture Schedule (Schedule shall indicate the following information:)

Fixture Designation.
General Fixture Description.
Number and Type of Lamp(s).
Type of Mounting.
Special Features.

11.4.8.1.5 Details

Construction details, sections, elevations, etc., shall be provided where required for clarification of methods and materials of design.

11.4.8.2 Required Electrical Design Analysis

Design analysis and calculations for the electrical systems shall be prepared by a licensed professional engineer and shall be stamped as such. The design analysis shall be separately bound, in one or more volumes. Show functional and engineering criteria, design information, and calculations applicable to the project. The analysis shall be organized in a format appropriate for review, approval, and record purposes. The design calculations shall indicate methods and references identified, and shall explain assumptions and conclusions. In addition to the Voltage Drop and Fault Current Calculations and the Coordination Study, the design analysis shall include:

Connected and Demand loads for all panelboards, switchboards and electrical service equipment.
Lighting calculations, point by point, for the aircraft dock and site areas.
Catalog cuts for all major electrical equipment and devices.

11.4.8.2.1 Voltage Drop (VD) Calculations

Select conductor sizes of primary feeders, site lighting circuits, service laterals, and unit feeder conductors. Calculate maximum length for each phase of each primary circuit, using a maximum allowable VD for each circuit.

Calculate voltage drops for each conductor. Maximum allowable voltage drop for site lighting and service laterals is 3%. The combined voltage drop for the service laterals, unit feeders, and branch circuits cannot exceed 5%.

11.4.8.2.2 Fault Current Calculations and Coordination Study

Prepare a complete short circuit and coordination study starting with the available 400 MVA with X/R=15 at the primary side of the main service transformer through the low voltage devices in these facilities.

11.4.9 Specifications

Provide final specifications. The Contractor shall make final identification of all materials and finishes at this stage.

11.4.10 Landscape, Planting and Turfing

Final design drawing(s) shall include a complete schedule of plant materials which indicates their botanical and common names, plan symbols, quantities, sizes, condition furnished, and pertinent remarks. Scale of drawing shall be prepared at 1" = 30'. Drawing shall correspond with the site layout and grading plans and reference coordinates, north arrows, graphic scales and appropriate legends. An overall planting layout shall be developed and shall include enlarged detail plans of specific areas as needed, to clarify requirements. Final design drawings, indicating proposed plants by a (+) mark for the plant location and a circle which is scaled at approximately 2/3 the ultimate growth spread (diameter) of plants, shall also include a complete schedule of plant materials which indicates botanical and common names, plan symbols, quantities, sizes, condition furnished, and pertinent remarks. Final drawings shall also include the basic details for installation of tree, shrub, and ground cover planting, as well as any other applicable details for clarification of specific project requirements.

11.5 Design Complete Submittal (Corrected Final)

11.5.1 Design Drawings

Drawings shall be 100% complete, signed and sealed by the designer of record. All previous review comments shall be incorporated.

11.5.2 Design Analysis

Complete design analysis for all design disciplines. The final Fire Protection and Life Safety Analysis shall be included in the Design Analysis.

11.5.3 Comment Response Package

Complete package showing all comments from all previous reviews and the respective response and disposition.

11.5.4 This submittal shall include all drawings and design information from the 100% site/utility submittal to form a complete design package.

11.6 Approved Corrected Final Design Submittal

11.6.1 Design Drawings

Drawings shall be 100% complete, signed and sealed by the designer of record. All previous review comments shall be incorporated.

11.6.2 Design Analysis

Complete design analysis for all design disciplines. The final Fire Protection and Life Safety Analysis shall be included in the Design Analysis.

11.6.3 Comment Response Package

Complete package showing all comments from all previous reviews and the respective response and disposition.

11.6.4 This submittal shall include all drawings and design information from the 100% site/utility submittal to form a complete design package.

12. DESIGN RELATED PRODUCTS

12.1 Architectural Renderings

Contractor shall provide the original and three copies of each ground level perspective artist's renderings of completed typical facilities with walks, parking, and landscaping. Renderings shall be no smaller than 14" x 18" or larger than 28" x 36", multi-colored, and shall be suitably titled, matted, and framed.

12.2 DD Form 1354

Three sets of DD Form 1354, Transfer and Acceptance of Military Real Property shall be prepared in accordance with DA Pamphlet 415-28 available at http://www.usapa.army.mil/gils/ and submitted to the Contracting Officer. The DD Form 1354 will completed by the Contractor with input from the design agent. The form must be completed in English units.

12.3 Submittal Register, ENG FORM 4288

The Contractor shall complete and submit three copies of a "preliminary" Eng Form 4288, Submittal Register to Contracting Officer. The "preliminary" Eng Form 4288, Submittal Register shall have the column "Submittal Identification", "Specification Paragraph Number", "Description of Submittal" "Type of Submittal", and "Remarks" completed; the Contractor shall identify whether the submittal is for "Government Approval" or for "Government Information" under the column "Remarks." The "final" Eng Form 4288, Submittal Register, shall be in accordance with paragraph Submittal Register as referenced in SECTION 01330/S.

12.4 PREWARRANTY CONFERENCE

Prior to contract completion and at a time designated by the Contracting Officer or his representative, the Contractor shall meet with the Contracting Officer to develop a mutual understanding with respect to the requirements of Paragraph: WARRANTY OF CONSTRUCTION. The Contracting Officer shall establish communication procedures for Contractor notification of warranty defects, priorities with respect to the type of defect and reasonable time required for Contractor response, and other details deemed necessary by the Contracting Officer for the execution of the construction warranty.

12.5 AS-BUILT DRAWINGS
Provide As-Built Drawings as specified herein and in accordance with specification Section 01780 – AS-BUILT DRAWINGS SUBMITTALS.

12.5.1 General

The Contractor shall be responsible to prepare and maintain the as-built drawings for this project. "As-built" drawings are a specific and distinct deliverable item under the terms of the contract. Failure to maintain and deliver these drawings will be treated by the Government in a manner similar to the failure to provide a specified item of construction material or equipment.

12.5.2 As-Built Drawing Components

There shall be three (3) components to the as-built drawings:

a. Working as-built drawings;
b. Final as-built drawings (dimensionally stable mylar film);
c. Digital as-built drawings (digital files saved to approved media).

12.5.3 Scope of As-Built Drawings.

The as-built drawings shall be a record of the construction as installed and completed by the Contractor. They shall include the information shown on the contract set of drawings and a record of deviations, modifications, or changes from those drawings, however minor, which were incorporated into the work, additional work not appearing on the contract drawings, and changes which are made after final inspection of the work. Level of detail provided on as-built drawings shall match that of the original contract drawings. If additional work changes the as-built conditions after submission of the as-built drawings, the Contractor shall furnish revised or additional drawings to depict as-built conditions. Critical shop drawings or other submittal items, which exceed the level of detail of the as-built drawings and which are needed for the proper operation and maintenance of the project, shall be provided in Operations and Maintenance Manuals.

12.5.4 Working As-Built Drawings

The Contractor shall maintain two sets of paper prints which shall show the as-built conditions and which shall be kept current and available on the jobsite at all times. One set shall be maintained in the Contractor's on-site office, and the second set will be maintained in the Corps of Engineers' Resident Office. Changes from the contract plans which are made in the work or additional information uncovered in the course of construction shall be accurately and neatly recorded as they occur by means of details and notes. The as-built marked prints shall be jointly inspected for accuracy and completeness by the Contracting Officer and the Contractor prior to submission of each monthly pay estimate. A representative of the Contractor and a representative of the government shall each sign and date the coversheet of the record drawings when reviewed. Failure to submit the working as-builts for review may be considered as an incomplete pay estimate. The drawings shall show the following information, but not be limited thereto:

a. The location and description of utility lines or other installations of any kind or description known to exist within the construction area. Exterior utilities shall be located in both the horizontal and vertical planes. Dimensions shall be within an accuracy of approximately 100mm or 4 inches. Vertical location shall be referenced to finished grade or floor level and the horizontal location referenced to a permanent structure such as the face of a building or street curb.

b. The location and dimensions of changes within the building or structure. Accuracy of dimensions will match the level of accuracy of the original contact drawings. Items depicted symbolically shall use the same symbology of the original drawings. Items depicted on the original drawings without

dimensions shall be shown in their approximate actual "as-constructed" location.

c. Correct grade or alignment of roads, structures, or utilities if changes were made from contract plans.

d. Correct elevations if changes were made in site grading.

e. Changes in details of design or additional information obtained from shop drawings prepared or furnished by the Contractor. Information incorporated into as-built drawings shall be at a level of detail consistent with the original drawings.

f. The topography and grades of drainage constructed or affected as a part of the construction.

g. Changes or modifications resulting from the final inspection.

h. Where contract drawings or specifications allow options, the option selected for construction shall be shown on the as-built drawings.

i. Working as-built drawings of each drawing shall have the words "DRAWING OF WORK AS-BUILT" in letters at least 3/16-inch high placed below the title block between the border and the trim line. The date of completion and the words "REVISED AS-BUILT" shall be placed in the revision block above the latest existing revision notation.

j. The title block for additional as-built drawings shall be similar to that used on the original drawings.

12.5.5 Final Working As-Built Prints for Review and Approval

Two copies of the working as-built marked prints shall be delivered to the Contracting Officer at the time of final inspection for his review and approval. Upon approval, one copy of the as-built marked prints will be returned to the Contractor. If upon review, the drawings are found to contain errors or omissions, they will be returned to the Contractor for corrections. The Contractor will complete the corrections and return the drawings to the Contracting Officer within 10 calendar days.

12.5.6 Final Drawings (CAD)

The original drawings have been prepared by Computer Aided Drafting (CAD). Upon approval of the working as-built prints, the Contractor shall modify the original CAD drawing files to bring them into agreement with the working as-built prints. If additional drawings are required, they shall be prepared in the MicroStation format. The Graphic and Data Base standards developed by Robins Air Force Base shall be followed to the greatest extent possible. A documentation handbook shall be submitted with the database. The handbook shall contain a description of the database, it's naming conventions, layering schemes, and all other pertinent information needed to construct and use the database. The Contractor shall submit final as-built CAD drawings in MicroStation Version J or V8 or later format.

12.5.6.1 Media

Digital Data Format shall be as listed below in order of preference.

1. 5-1/4" Read/Write (R/W) Compact Disc (CD) (650, IBM compatible format) (non-compressed).

2. Bernoulli Removable Hard Disk utilizing native file format (non-compressed)(40mb or larger, IBM compatible format)

3. 3.5-in. High-density diskettes(1.44mb) utilizing Windows Backup or Pkzip software.

12.5.6.2 Draftsmanship

Only personnel proficient in the preparation of digital engineering drawings to standards satisfactory and acceptable to the Government shall be employed to modify the original contract drawings or prepare additional new drawings. All additions and corrections shall be neat, clean, and legible and shall match the adjacent existing linework and lettering being annotated in type, density, size, and style. The Contracting Officer will review all as-built drawings for accuracy and conformance to the above specified drafting standards. The Contractor shall make all corrections, changes, additions, and deletions required to meet these standards.

a. Final as-built revisions of each drawing shall have the words "DRAWING OF WORK AS-BUILT" in letters at least 3/16 inch 7 mm high placed below the title block between the border and the trim line. The date of completion and the words "REVISED AS-BUILT" shall be placed in the revision block above the latest existing revision notation. All marking highlighting previous revisions shall be removed.

b. The title block for additional as-built drawings shall be similar to that used on the original drawings.

12.5.7 Final Submittal

Not later than 60 days after the contract completion date, the Contractor shall submit to the Contracting Officer two sets of final as-built drawings on acceptable media as described in paragraph MEDIA above together with one set of approved working as-built marked-up prints, one set of as-built reproducible drawings (mylar), and one set of blue line prints, which will become the property of the Government upon final approval. Format for final as-built drawings shall be as specified in the paragraph FINAL DRAWINGS (CAD) above. Approval and acceptance of final as-built drawings shall be accomplished before final payment is made to the Contractor.

12.5.8 Structrual Steel Shop Drawings

Contractor shall furnish electronic file of structural shop drawings including structural shop drawings for hangar doors to the Contracting Officer. Format must be approved by the Contracting Officer.

12.5.9 Plumbing Drawings

Provide a laminated one-line drawing of the domestic water system for each facility constructed, located in the main mechanical room. Drawing shall indicate location of domestic water piping, isolation valves, accessories and equipment connections.

12.6 OPERATING AND MAINTENANCE INSTRUCTIONS

Provide operating and maintenance (O&M) instructions as described herein and in accordance with specification Section 01781N – OPERATION AND MAINTENANCE DATA

12.6.1 General

Operating and maintenance (O&M) instructions shall be furnished for equipment and systems as required in the SPECIFICATIONS. The operating and maintenance instructions shall include two separate manuals, an Operations Manual and a Maintenance Manual, and shall include framed instructions when required by the specific section. Each system or piece of equipment shall be covered in the two separate manuals regardless of the number of suppliers or subcontractors involved. Combining more than one system or piece of equipment into the same manuals may be permitted if the manuals are indexed by section and do not exceed 4 inches 100 mm in thickness. Data submitted for the manual shall be in addition to that furnished as shop drawings. Unless otherwise specified in the SPECIFICATIONS, the Contractor shall assemble six complete bound Operations Manuals and six complete bound Maintenance Manuals, plus two CD’s with electronic versions (*.doc or *.pdf) of the manuals. Operations and maintenance data shall be submitted within 30 days after approval of the equipment or system and not less than 60 days prior to scheduled testing. Operations and maintenance data shall also be submitted and approved by the time the project reaches 90 percent completion. If O & M data cannot be completed until equipment or systems have been tested and balanced, a draft copy shall be submitted within the specified time. The completed O&M data shall then be submitted within 30 days after the completion of such testing and balancing.

Unless otherwise authorized by the Contracting Officer, the Government will not accept the equipment or systems nor will the Government take possession of the associated work until O & M data are submitted and approved.

12.6.2 Manuals

Operations and maintenance manuals shall be assembled in a durable stiff (hard) covered binder for 8-1/2 by 11-inch 213 by 275 mm sheets with slide binding or screwpost fastening for replacement. Loose-leaf ring binders shall not be used. A permanently printed title on the covers shall show the project name, contract number, and the name of the equipment or system. Shop assembly or special drawings for manuals or parts catalogs shall be of a size that requires folding only a left-to-right coordinate. Each sheet shall be numbered and an index shall be provided. All standard catalog cuts, manufacture's data, parts sheets, or illustrations, shall be originals. A warning page shall be provided to warn of potential dangers, such as high voltage, toxic chemicals, flammable liquids, explosive materials, carcinogens, or high pressures. The warning page shall be placed inside the front cover or tab page if more than one section is combined, in front of the title page. The title page shall show the name of the preparing firm (designer or contractor) and the date of publication. All non-applicable data such as descriptions of other models and optional equipment not included shall be marked out or all applicable data shall be distinctly highlighted. If reference is made to other drawings or data, they shall be included. Manuals shall include the following information for each item of equipment or system:

12.6.2.1.1 Operations Manual

The Operations Manual shall show operating procedures, sequences, and precautions. The Contractor shall coordinate subcontractors, suppliers, and manufacturers to assure complete submittals on interrelated components. Include adequate illustrative material to identify and locate operating controls, indicating devices and locations of areas or items requiring operation or adjustments. As a minimum, the manual shall include piping and equipment layout and simplified wiring and control diagrams of the complete system as installed. Describe, in detail, starting and stopping procedures for components, adjustments required to obtain optimum equipment performance, and corrective actions for malfunctions. Catalog cuts describing equipment operating procedures shall not be used as system operating instructions.

12.6.2.2 Maintenance Manual

The Maintenance manual shall provide instructions for routine and preventive maintenance showing lubrication, dismantling, assembly, repair, and adjustment, electric schematic and connection diagrams, hydraulic circuit diagrams with control and relief valve settings, control and interlock system diagrams, and lists of special tools required. Lubrication instructions shall be for service intended and shall include tables indicating items, frequencies, grades, and types of lubricants. Instructions shall include clearances, bolt torques, pressure settings, and other data. The nature and frequency of routine maintenance and procedures shall be indicated. The materials and test equipment that may be required shall be noted. Performance sheets and graphs, as applicable, showing capacity data, efficiencies, electrical characteristics, pressure drops, and flow rates shall be included. Marked-up catalogs or catalog pages shall not be used for this purpose. Performance information shall be presented concisely and shall contain only data pertaining to equipment actually installed.

Spare parts data and catalogs showing identification, nomenclature, part numbers, required parts, recommended spare parts stocked, and spare parts supplied shall be included. Local source of parts and dated current price list shall be included. Data shall match equipment furnished. Standard catalog data may be used only if irrelevant parts are marked out or relevant parts are clearly identified. Repair information shall show diagrams and schematics, guidance for diagnosing problems, and detailed instructions for making repairs. Troubleshooting information shall be provided that includes a statement of the indication or symptom of trouble and the sequential instructions necessary. Test hookups to determine the cause of trouble, special tools and test equipment, and methods for returning the equipment to operating conditions shall be identified. Information may be in chart form or in tabular format with appropriate headings.

12.6.3 Framed Instructions

Framed instructions shall include as-built schematics of all wiring, controls, piping, etc., necessary for the operation of the equipment or system, and condensed, printed description of the system and of the operating procedure. The framed data may include approved shop drawings, layout drawings, riser and block diagrams and shall indicate all necessary interrelationships with other equipment and systems. The operating instructions shall explain equipment or system prestart checkout, start-up and shut-down procedures, safety precautions, preventive maintenance procedures, and normal operations checks for satisfactory performance of the equipment or system. The framed data may be presented in one or several frames, under glass or plexiglass, for clarity and convenience of location. The framed data presentation and outline shall be acceptable to the Contracting Officer and posted at locations designated by the Contracting Officer. The data shall be posted before personnel training or performance testing acceptance for the related items of equipment or system.

13.0 TRAINING

Formal classroom and on-site training shall be provided for all building and process systems. If significant changes or modifications in the equipment or systems are made during the term of the contract after instructions have been concluded, additional instructions shall be provided to acquaint the O&M personnel with the changes or modifications. A copy of the training manual for each trainee plus two additional copies and one CD shall be delivered to the Contracting Officer. Manuals shall include an agenda, the defined objectives

for each lesson, and a detailed description of the subject matter for each lesson.

The Contractor shall videotape all formal classroom and on-site instruction training sessions. Copies of the audiovisuals shall be delivered with the printed training manuals. The Contractor shall provide equipment, material and trained personnel to record the sessions using VHS audio-video recording format. Upon completion of the training instructions, the recordings shall become the property of the Government. The recordings shall be identified, indexed, and placed in appropriate approved storage containers for submittal to the Contracting Officer.

A training day is defined as 8 hours of classroom instruction, excluding lunchtime, Monday through Friday, during the daytime shift in effect at the training facility. Approval of the Contractor's training schedule shall be obtained from the Government at least 30 days before the training.

14.0 PAYMENT DURING DESIGN

Payments, as authorized by the Authorized Representative of the Contracting Officer (COR), will be made monthly for the amount and value of the work and services performed by the Contractor. This estimate will be verified by the Contracting Officer utilizing the progress charts or the CONTRACTOR-PREPARED NETWORK ANALYSIS SYSTEM submitted by the Contractor and independent analyses of progress. See Contract Clause entitled PAYMENTS UNDER FIXED-PRICE CONSTRUCTION CONTRACTS for additional information.

-- END OF SECTION --

SECTION 01013

DEPAINT FACILITY TECHNICAL DESIGN CRITERIA

1.0 CODES, STANDARDS AND CRITERIA

(a) In addition to the specific Codes, Standards and Criteria referenced throughout this RFP, the Design-Build Contractor shall prepare all design and construction documents in accordance with the most current edition of the following:

Applicable Department of Defense (DoD) regulations
Military Handbooks (MIL-HDBK's)
Air Force Regulations (AFR's), including AFR 88 series regulations
Air Force Instructions (AFI's)
Air Force Manuals (AFM's, AFMAN's)
Air Force Handbooks
Air Force Pamphlets (AFP's, AFPAM's)
Engineering Technical Letters (ETL's)
Engineering Manuals (EM's)
Engineering Guidance Letters (EGL's)
Construction Technical Letters (CTL's)

These documents are available via the internet at:

http://www.hnd.usace.army.mil/techinfo/

(b) The Design-Build Contractor shall also follow all current national and state codes, regulations and specifications involving civil, architectural, interior design, structural, mechanical, electrical, and environmental disciplines which are applicable to the engineering design and construction industry, including OSHA Safety and Health Standards and Air Force policy on Ozone Depleting Chemicals (ODC's).

(c) Use of National Fire Codes and Life Safety Codes, published by the National Fire Protection Association (NFPA), the International Building Code (IBC), the Americans with Disabilities Act (ADA), and the Uniform Federal Accessibility Standards (UFAS) is mandatory on all projects.

(d) Robins AFB has determined the following items are preferences given in order from most important/desired to less desired/important. The information is given to the Design-Build contractor so that he may balance his design decisions with the weighted desire of the base.

Depaint Facility

1. A tail-in configuration.

2. View of the hangar dock (conference room, WS-12 supervisor office, or a separate viewing room).

3. Replacement of lamps in the depaint hangar from outside the dock area.

Depaint Equipment
*8
1. Deleted~~Directly piping utilities to the teleplatforms (Dry Media Stripping Sytem(DMSS), compressed air, etc.)~~.

2.0 EXISTING CONDITIONS

2.1 ASBESTOS-CONTAINING MATERIALS (ACM)

(a) Several facilities on Robins AFB contain asbestos in the form of pipe insulation, boiler and tank insulation, wall and ceiling materials, floor tile and mastic, exterior siding, roofing, and flexible duct connectors. The government has performed a preliminary survey to determine the presence of asbestos in facilities where work will be performed – see Appendix I – Environmental and Abatement Information for the resulting findings.

(b) The Design-Build Contractor will be required to perform asbestos field surveys and testing to determine the extent of ACM present in all buildings being demolished. Field surveys shall fully describe locations, types (chrysotile, crocidolite, amosite, anthophyllite, tremolite, and actinolite), and quantities. Include percentage of asbestos and composition of material.

(c) Submit documentation and certifications of personnel trained to take ACM samples to the CO prior to beginning asbestos surveys.

(d) Submit samples for ACM testing to a certified laboratory. The designer shall submit to the CO the laboratory results and other pertinent information of samples sent for testing for ACM as soon as they become available.

(e) Refer to Appendix G – Specific Base Wide Technical Specifications for specification Section 01560 – ENVIRONMENTAL REQUIREMENTS. This section describes the general guideline/procedures at Robins AFB. The abatement design drawings and specifications shall be based on these local procedures. The Design-Build Contractor shall provide his own asbestos abatement specification to comply with the latest environmental regulations and procedures. All abatement design drawings and specifications shall be coordinated through the Corps of Engineers.

2.2 SPECIAL WASTE

(a) Several facilities on Robins AFB contain special waste in the form of fluorescent fixtures/lamps, HID fixtures, ballasts, mercury thermostats and air conditioning systems with refrigerants.

(b) The Design-Build Contractor will be required to perform field surveys and testing to determine the extent of special waste present in all buildings being demolished. Field surveys shall fully describe locations, types, and quantities.

(c) Submit documentation and certifications of personnel trained to take special samples to the CO prior to beginning asbestos surveys.

(d) Submit samples for special waste testing to a certified laboratory. The designer shall submit to the CO the laboratory results and other pertinent information of samples sent for testing for special waste as soon as they become available.

(e) Refer to Appendix G – Specific Base Wide Technical Specifications for specification Section 01560 – ENVIRONMENTAL REQUIREMENTS. This section describes the general guideline/procedures at Robins AFB. The abatement design drawings and specifications shall be based on these local

procedures. The Design-Build Contractor shall provide his own special waste abatement specification to comply with the latest environmental regulations and procedures. All abatement design drawings and specifications shall be coordinated through the Corps of Engineers.

2.3 LEAD-BASED PAINT

(a) For all buildings being demolished the Design-Build Contractor shall comply with 29 CFR 1926 with respect to expose of workers to hazardous materials.

(b) The Design-Build Contractor shall assume that all existing demolition materials do not contain lead-based paint (except as noted in item a above). The Design-Build Contractor's bid price shall be based on the assumption that all demolition (excluding items identified as ACM) will be disposed of as standard construction waste. Upon contract award, the Design-Build Contractor shall test all existing facilities to validate this baseline and provide test results to the Corps of Engineers in a timely fashion as not to impact the Design-Build Contractor's schedule. If the test results require mitigation of the materials as lead contaminated waste a construction modification will be instituted to pay for the additional project costs.

2.4 POINTS OF CONTACT

(a) The Corps of Engineers shall be notified immediately of any damage to government property or injury to AF personnel caused by the Design-Build Contractor.

(b) Information regarding fire prevention, welding and cutting, or fire protection systems shall be obtained from and coordinated with the Corps of Engineers.

(c) Base traffic regulations shall be observed by all Design-Build Contractor personnel. Information regarding such regulations shall be obtained from and coordinated with the Corps of Engineers.

2.5 CONTAMINATED SOIL

An environmental site assessment has been completed. It has been determined that this project does not contain any subsurface environmental hazards. However, in the event that abnormalities, discolorations, odors, oil, or other signs of potential contamination by hazardous materials are encountered during excavation or other construction activities, notify the Government immediately. Follow with written notice within 24 hours, indicating date, time, and location of potential contaminants encountered.

2.5 GEOTECHNICAL ENGINEERING DATA

2.5.1 Government Investigation

The Government has performed geotechnical investigations at the project site. The results of the explorations are discussed in subsequent paragraphs of this section. The results of the explorations are furnished for informational and bidding purposes only and not for final design.The Design-Build Contractor, with his consulting geotechnical engineer, shall perform additional geotechnical investigations and testing as are deemed necessary. The consulting geotechnical engineers participating in the design shall be registered engineers and be familiar with the physiographic location of the project. The Contractor shall be fully responsible for acceptable

foundations, pavements and other geotechnical aspects for the proposed project.

2.5.2 Design-Build Contractor Investigation

The Design-Build Contractor, through his consulting geotechnical engineer, shall perform additional geotechnical investigations and testing to determine site-specific geotechnical conditions. The site-specific geotechnical conditions, together with recommendations specific to the geotechnical design and construction requirements for the proposed project, shall be addressed in a geotechnical report prepared by the consulting geotechnical engineer. The report shall include, but not be limited to, the following:

a. Description of the site as to topography, existing surface conditions, and any other features that might influence the design.

b. Description of the investigation program and the methods used. Subsurface exploration may include soil test borings, cone penetrometer test (CPT) soundings, and test pits. The investigation, sampling, and identification of subsurface materials shall be in accordance with methods and procedures described in ASTM D 420. Soil investigation and sampling by hollow-stem auger borings shall be in accordance with AASHTO T 251. Drilling and sampling with the "Standard Penetration Test" (SPT) split-barrel sampler shall be in accordance with ASTM D 1586. The procedure shall be modified to provide for continuous standard penetration and sampling tests for the initial 3.7 meters (12 feet) of the boring. Beginning at a depth of 4.6 meters (15 feet) below grade, penetration and sampling tests can be performed every 1.5 meters (5 feet) and at each change in soil stratification or soil consistency. The location of the groundwater table, if encountered, shall be measured and recorded after 24 hours. If drilling techniques that prevent determination of the groundwater table are used, install at least one piezometer for every four explorations to measure the depth to the groundwater table. Classification of soils shall be in accordance with ASTM D 2487 or D 2488, as appropriate. Cone penetrometer test (CPT) soundings shall be in accordance with ASTM D 5778. Undisturbed soil sampling shall be in accordance with ASTM D 1587.

The depths of explorations shall be of sufficient depth to evaluate bearing capacity and settlement potential. However, beneath structures, explorations shall extend to a minimum depth of 7.6 meters (25 feet) below existing ground surface or below final design grade, whichever is lower. Beneath roads, hardstands, and/or parking areas, explorations shall extend to a minimum depth of 1.5 meters (5 feet) below existing ground surface or below final design grade, whichever is lower.

The Design-Build Contractor shall be responsible for all applicable clearances and permits and for the protection of all underground utilities from damage during field investigations. Utility clearances and digging permits are required prior to drilling on the installation. Procurement of the clearances and permits shall be coordinated through the Contracting Officer.

c. Discussion of the subsurface soil conditions and stratigraphy and groundwater conditions.

d. Location plan of explorations.

e. Logs of explorations. Indicate on logs complete information on who, when, and how made. Show soil description, standard penetration resistance, N, or other type resistance, topsoil, water level observations, surface elevation and datum, and any other information gathered during the exploration.

Exploration locations shall be surveyed. Surveyed elevations and coordinates shall be provided on each exploration log. Elevations shall be in accordance with NGVD 29 and horizontal coordinates shall be in accordance with NAD 83 (Georgia State Plane Coordinates); accuracy to be plus or minus 1 meter (3 feet) horizontal and plus or minus 150 mm (0.5 foot) vertical.

Soil test boring logs shall show graphical representation of soil strata, location of each change by depth or elevation, location of each sample by depth or elevation, and number of blows for each 150 mm (6 inches) and amount of soil recovered for each sample location. Logs shall also indicate type and size of casing, type of drilling fluid, and type and size of drill bit. If no casing is used, indicate size of borehole. Indicate when boring is terminated due to refusal.

Soil classifications for final logs shall be based on the field classifications, the results of tests, and further inspection of samples in the laboratory by geotechnical engineers.

Include a chart illustrating the soil classification criteria and the terminology and symbols used on the boring logs.

Locations of all explorations shall be shown on the grading and drainage plates of the submittal drawings. Logs of all explorations shall be included on plan(s) of the submittal drawings. Additionally, locations of all explorations, logs of all explorations, and results of all laboratory testing shall be included on drawing sheets in the final “As-Built” drawings. If necessary, the logs and test results can be scanned onto the drawing sheets.

f. Laboratory test data shall be included in detail. Laboratory testing shall be in accordance with the requirements set forth in EM 1110-2-1906, Laboratory Soils Testing, EM 1110-2-1909, Calibration of Laboratory Soils Testing Equipment, and/or applicable ASTM standards. All laboratory testing shall be performed by a commercial testing laboratory that has been validated by the Engineer Research and Development Center Materials Testing Center (MTC) under the Corps of Engineers laboratory inspection and validation program. The laboratory shall be listed on the list of Cops of Engineers Validated Laboratories.

g. Notation of the location of strata containing organic materials, weak materials or other inconsistencies that might affect engineering conclusions.

h. Pavement design, or if not responsible for pavement design, pavement structural design data, including design California Bearing Ratio (CBR) and modulus of subgrade reaction.

i. Discussion of the facilities under design and recommendations regarding foundation support of the structures and slabs on grade, including soil bearing pressures, bearing elevations, foundation design recommendations and anticipated settlements, including total and differential.

j. Anticipation of, and management of, groundwater.

k. Discussion of site preparation and the effect of weather and construction equipment on soils during construction.

l. Areas requiring undercutting and removal of unsatisfactory soils.

m. Types of materials to be excavated and possible uses and/or disposition of the materials.

n. Fill and backfill placement procedures, including recommended moisture content range, and types of compaction equipment.

o. Results of pH tests and salinity tests and resistivity measurements, as appropriate, necessary to design corrosion control and grounding systems. The raw field data shall be included in the report.

p. Lateral earth pressures and pressure coefficients (active, passive, and at rest) and internal friction angles for design of walls below grade, including backfill, compaction and subdrainage, and their requirements.

q. Results of laboratory soils testing, to include classification and compaction tests, on representative samples of proposed borrow material (both on and/or off the installation). Testing shall be as specified in subparagraph 2.5.11.1. If borrow material is to be obtained from sources off the installation, provide the name and location of the borrow source.

r. Provide calculations that support the recommendations for the foundation design. The calculations may be included in an appendix to the report. Calculations shall include loadings, capacities, safety factors, settlement analysis, bearing analysis, and references from which calculations are based. Any graphs and formulas shall be clearly indicated along with derivation of curve slopes and data derived from laboratory testing. Computer outputs shall also be included.

Three original copies of the geotechnical report shall be submitted with the 60 percent submittal. If revisions are made to the 60 percent design submittal that require revisions to the geotechnical report, a revised report (three original copies) shall be provided with the final design submittal.

2.5.3 Certification

The Contractor and his professional geotechnical engineer consultant shall certify in writing that the design of the project has been developed consistent with the site-specific geotechnical conditions. The certification shall be stamped by the consulting professional geotechnical engineer and shall be submitted with the 60 percent design submittal. If revisions are made to the 60 percent design submittal, a new certification shall be provided with the final design submittal.

2.5.4 Field Exploration

2.5.4.1 Subsurface conditions at the project site were explored by five soil borings (designated B-6 through B-10) drilled at the approximate locations shown on the Site Layout drawings included with this RFP. Borings B-1 through B-5 were drilled for the proposed adjacent Paint Facility. All of the borings were drilled to 7.6 meters (25 feet) below the existing ground surface.

2.5.4.2 Boring locations were established in the field by measuring distances and estimating right angles from the existing site buildings and other site features.

2.5.4.3 The test borings were drilled by Geotechnical and Environmental Consultants (GEC), Inc., Macon, Georgia, under contract to the Savannah District. The borings were drilled with a CME 55 drill rig; a 57 mm (2-1/4-inch) hollow-stem auger was used to advance the boreholes. Split-barrel sampling with Standard Penetration Testing (SPT) was performed at intervals shown on the boring logs. All soil sampling and Standard Penetration Testing were in general accordance with ASTM D 1586. In the Standard Penetration Test, a soil sample is obtained with a standard 38 mm (1-1/2 inch) I.D. by 50 mm (2-inch) O.D. split-barrel sampler. The sampler is first seated 150 mm

(6 inches) and then driven an additional 300 mm (12 inches) with blows from a 63.5 kg (140-pound) hammer falling a distance of 760 mm (30 inches). The number of blows required to drive the sampler the final 300 mm (12 inches) is recorded and is termed the "standard penetration resistance," or the "N-value." Penetration resistance, when properly evaluated, is an index of the soil's strength, density, and foundation support capability. Groundwater levels were measured in the boreholes during drilling; each borehole was backfilled immediately upon termination of drilling.

2.5.4.4 Representative portions of the soil samples taken in the field were sealed in airtight containers and transported to the driller's laboratory. In the laboratory, they were examined by an engineer and classified. Classification of the soil samples was performed in general accordance with ASTM D 2488 (Visual-Manual Procedure for Description of Soils). The soil classifications include the use of the Unified Soil Classification System described in ASTM D 2487 (Classification of Soils for Engineering Purposes). Since the soil descriptions and classifications are based on visual examination, they should be considered approximate, except where the samples were subjected to laboratory testing, as described below.

2.5.4.5 Soil boring logs that graphically depict soil descriptions, standard penetration resistances, and observed groundwater levels, are shown on the drawings included with this RFP.

2.5.4.6 Six of the Standard Penetration Test samples were selected for grain-size distribution testing. Six additional samples from borings at the adjacent Paint Facility were also tested for grain size distribution. The laboratory tests were performed in substantial accordance with applicable ASTM standards. Results of the laboratory testing are shown on the drawings included with this RFP.

2.5.5 Site and Subsurface Conditions

2.5.5.1 Site Description

The proposed Corrosion Control De-Paint Facility will be located approximately 120 meters (400 feet) east of Gate No 1 and less than 30 meters (100 feet) north of existing hangars numbered 47 and 48 or about 30 meters (100 feet) south of the proposed Paint Facility. The site for the De-Paint and Paint Facility totals about seven acres in area. The southern half of the site generally slopes at about two percent from the west toward the east with elevations generally ranging from 88.1 to 85.1 meters (289 to 279 feet). Numerous parking lots, service roads, utilities and buildings numbered 51,60 and 55 will be demolished.

2.5.5.2 Area and Site Geology

The project site is located about (30 km) 20 miles below the Fall Line in the Coastal Plain Physiographic Province of Georgia. The Coastal Plain consists mainly of marine sediments including sands, clays, silts and combinations of each. The soils were deposited during successive periods of fluctuating sea level and moving shoreline. The soils tend to have random distribution and properties. Upland sediments may be interlayered with shoreline deposits in areas where the Piedmont Physiographic Province is relatively close.

2.5.5.3 Subsurface Conditions

Borings B-6 through B-10 were drilled for the De-Paint Facility. Borings B-1 through B-5 were drilled for the Paint Facility. The soil test borings encountered both fill soils and Coastal Plain soils. Borings B-1, B-3, B-5, B-6 and B-10 were drilled through existing pavement. Fill soils were

encountered in borings B-2 through B-10 at depths ranging from 1 to 2 meters (3 to 6 feet) below the existing ground surface. The fill soils consist of clayey and silty sands. The consistency of the clayey sand ranged from medium stiff to stiff. The density of the silty sands, which are interrupted by an occasional thin layer of clayey sand, ranged from loose to medium. The Coastal Plain soils encountered consisted of predominantly silty sands, clayey sands, occasionally interrupted by a layer of sandy clay. The standard penetration resistance values, or N-values, within the soils were scattered. N-values in the fill soils ranged from 5 to 28; N-values in the Coastal Plain soils ranged from 4 to 50 with most between 15 and 25.

2.5.5.4 Groundwater Conditions

Groundwater was encountered immediately after drilling at depths ranging from 5.8 to 6.7 meters (19 to 22 feet) below existing grade in borings B-1 through B-5 (Paint Facility). Groundwater was encountered immediately after drilling at depths ranging from 4 to 5.5 meters (13 to 18 feet) below existing grade in borings B-6 through B-10 (De-Paint Facility). No water was encountered in B-7 at completion of the boring. Each borehole was backfilled immediately upon termination of drilling. Groundwater levels can fluctuate depending on climatic and rainfall conditions. Normally, the highest groundwater levels occur in late winter and spring and the lowest levels occur in late summer and fall.

2.5.6 Foundation Design

2.5.6.1 General

Given the proposed site and the types of proposed structures, it is anticipated that shallow spread footings can be used for support of the structures.

2.5.6.2 Allowable Bearing Pressure

For bid purposes, assume an allowable soil bearing pressure of 120 KPa (2500 psf), based on total load. The consulting geotechnical engineer shall determine allowable soil bearing pressure. An adequate level of protection against structural failure due to uniform and/or differential foundation settlement or general shear shall be provided. A one-third increase in the allowable bearing pressure can be used in designing footings for additional temporary live loads such as those due to wind or seismic activity; however, increases in allowable stress in structural members shall not be used with these loads.

2.5.6.3 Footing Dimensions

Column footings and load-bearing wall footings shall have minimum dimensions of 762 mm (30 inches) and 610 mm (24 inches), respectively, and shall be located at a minimum depth of 610 mm (24 inches) below finish floor or finish grade, as appropriate. Non load-bearing wall footings shall have a minimum width of 457 mm (18 inches) and shall be located at a minimum depth of 457 mm (18 inches) below finish floor or grade, as appropriate.

2.5.7 Seismic Design

Seismic loads shall be computed in accordance with IBC 2000, except as modified by UFC 1-200-01. The project site shall be classified as Site Class D for the purpose of determining maximum considered earthquake spectral response accelerations.

2.5.8 Slabs on Grade

All interior slabs on grade, including storage rooms, shall be underlain by a moisture vapor barrier consisting of lapped polyethylene sheeting having a minimum thickness of 0.15 mm (6 mils) and a minimum 100 mm (4-inch) thick capillary water barrier of open graded, washed pea gravel, or crushed stone. Concrete slabs shall be jointed around columns and along supported walls to minimize cracking due to possible differential movement.

2.5.9 Soil Compaction

2.5.9.1 Soil compaction shall be achieved by equipment approved by the consulting geotechnical engineer. Soil materials shall be moistened or aerated as necessary to provide the moisture content that will readily facilitate obtaining the compaction specified with the compaction equipment used.

Each layer of structural fill and subgrades shall be compacted to the following minimum percent of the modified Proctor maximum density, determined in accordance with ASTM D 1557:

Beneath structures and building slabs, around footings and in trenches,	90 percent
Beneath streets and paved areas, except top 300 mm (12 inches) in fill and top 200 mm (8 inches) in native soil,	90 percent
Beneath streets and paved areas, top 300 mm (12 inches) in fill and top 200 mm (8 inches)in native soil,	95 percent
Beneath shoulders,	90 percent
Beneath sidewalks and grassed areas	85 percent
Base course under paved areas,	100 percent

The requirements shall be verified or modifications recommended by the consulting professional geotechnical engineer in the report wherever engineering, soils, or climatic factors indicate the necessity. Any modification to the specified compaction requirements shall require the approval of the Contracting Officer.

2.5.9.2 The Design-Build Contractor shall edit and submit the following UFGS Specifications:

02300	Earthwork
02315	Excavation, Filling and Backfilling for Buildings
02316	Excavation, Filling and Backfilling for Utilities

2.5.10 Pavement Design Parameters

For bid purposes, assume that the existing satisfactory subgrade soils after compaction will have a California Bearing Ratio (CBR) of 8 and a corrected Modulus of Subgrade Reaction, K, of 47,500 kN/m^2 per meter (175 psi per inch). The Design-Build Contractor‘s consulting geotechnical engineer shall determine the appropriate CBR and Modulus to be utilized in the design of pavements.

2.5.11 Construction Quality Control Testing

2.5.11.1 Prior to initiating any structural fill placement and/or compaction operations, representative samples of the soils which will be used as structural fill or subgrade, both suitable on-site soils and off-site soils (borrow), shall be obtained and tested to determine their classification and compaction characteristics. The samples shall be carefully selected to represent the full range of soil types to be used. The moisture content, maximum dry density, optimum moisture content, grain-size and plasticity characteristics shall be determined. These tests are required to determine if the fill and subgrade soils are acceptable and for compaction quality control of the subgrades and structural fill. A minimum of 5 compaction tests shall be performed on materials classified as satisfactory for use.

Tests for the above soil properties shall be in accordance with the following:

Moisture Content	ASTM D 2216
Maximum Dry Density and Optimum Moisture	ASTM D 1557
Grain-Size (Wash No. 200, w/o Hydrometer)	ASTM D 422 and ASTM D 1140
Plasticity	ASTM D 4318

2.5.11.2 A representative number of in-place field density tests shall be performed in the subgrade of compacted on-site soils and in the structural fill and backfill to confirm that the required degree of compaction has been obtained. In-place density tests shall be performed in accordance with the sand cone method prescribed in ASTM D 1556; the use of nuclear gauges for density testing will not be permitted. At least one density test shall be performed for each 1000 square meters (10,000 square feet), or portion thereof, of compacted existing onsite soil subgrade, and in each lift of compacted structural fill. At least one density test shall be performed for each 30 linear meters (100 linear feet) in the bearing level soils of continuous footings. Density tests shall be performed at 30-meter (100-foot) intervals along roadway subgrade soils. In addition, where utilities are located beneath structures or pavement, a density test shall be performed for each 50 linear meters (150 linear feet) of backfill placed per foot of depth. Where other areas are compacted separately by manually operated compactors, a minimum of one density test shall be performed for every 25 square meters (250 square feet), or portion thereof, of fill placed per foot of depth.

2.5.11.3 Any area that does not meet the required compaction criteria shall be reworked, and retested. If the moisture content of the soil is within the recommended range, additional compaction may be all that is necessary to increase the density. If the moisture content is not within the recommended range, then, the moisture content shall be adjusted to within the range, and the area recompacted.

2.5.11.4 All laboratory and field density testing shall be performed by a commercial testing laboratory qualified in this type of work and approved by the Contracting Officer.

2.5.12 Soil Treatment

2.5.12.1 The pesticide applicator's principal business shall be pest control and the pesticide applicator shall be State certified in the U.S. Environmental Protection Agency (EPA) pesticide applicator category which includes structural pest control, and certified in the State of Georgia.

2.5.12.2 Pesticides shall be delivered to the project site in sealed and labeled containers in good condition as supplied by the manufacturer or formulator. Pesticides shall be stored, handled, and used in accordance with manufacturer's labels. Labels shall bear evidence of registration under the Federal Insecticide, Fungicide, and Rodenticide Act (MX), as amended.

2.5.12.3 The Design-Build Contractor shall formulate, treat, and dispose of termiticides and their containers in accordance with label directions. Pesticides and related materials shall be kept under lock and key when unattended. Proper protective clothing and equipment shall be worn and used during all phases of termiticide application.

2.5.12.4 The Design-Build Contractor shall provide a 5-year written warranty against infestations or reinfestations by subterranean termites of the buildings constructed under this contract. Warranty shall include annual inspections of the building. If live subterranean termite infestation or subterranean termite damage is discovered during the warranty period, and the soil and building conditions have not been altered in the interim, the Design-Build Contractor shall:

a. Retreat the soil and perform other treatment as may be necessary for elimination of subterranean termite infestation;

b. Repair damage caused by termite infestation; and

c. Reinspect the building approximately 180 days after the retreatment.

2.5.12.5 Termiticides shall be currently registered by the EPA.

2.5.12.6 At the time of application, the soil moisture content shall be sufficiently low to allow uniform distribution of the treatment solution throughout the soil. Applications shall not be made during or immediately following heavy rains or when conditions may cause runoff and create an environmental hazard.

2.5.12.7 The Design-Build Contractor shall establish complete and unbroken vertical and/or horizontal (as necessary) soil poison barriers between the soil and all portions of the intended structure that may allow termite access to wood and wood related products. Application shall not be made to areas intended for use as a plenum air space. Surface treatments shall not be made for areas to serve as crawl spaces. Termiticide shall be applied as a coarse spray and provide uniform distribution unto the soil surface. Treatment shall be applied prior to placement of the vapor barrier and at least 12 hours prior to concrete placement. Where treated soil or fill material is not to be covered with a vapor barrier or waterproof membrane; adequate precautions shall be taken to prevent its disturbance. Soil or fill material disturbed after treatment shall be retreated as specified above before placement of slabs or other covering structures. Treatment of the soil on the exterior sides of foundation walls, grade beams, and similar structures shall be coordinated with final grading and planting operations so as to avoid disturbance of the treated barriers. Manufacturer's warnings and precautions shall be observed in the handling and use of such materials. Care shall be taken to prevent these chemicals from entering water supply systems, potable water supplies, or aquifers; and that they do not endanger plants or animals. The Contracting Officer shall be notified at least 48 hours prior to beginning of treatment and formulating, mixing, and application shall be performed in the presence of the Contracting Officer's representative.

2.5.12.8 Rates and methods of application shall be in accordance with the manufacturer's instructions on the pesticide label. Maximum application or dosage rates shall be used. If the pesticide contains less than the amount of active ingredient specified on the label, work shall be repeated with pesticides conforming to this specification.

2.5.12.9 The Design-Build Contractor shall dispose of residual pesticides and containers off Government property in accordance with label instructions and EPA criteria.

2.5.12.10 The Design-Build Contractor shall edit and submit the following UFGS Specification:

02364 Termiticide Treatment Measures for Subterranean Termite Control

2.5.13 Decay Treatment

The Design-Build Contractor shall be responsible for determining and implementing the appropriate treatment for prevention of subsurface induced decay.

2.5.14 Radon Mitigation

The design and construction of foundation walls, slabs, and crawl spaces shall include provisions for the reduction of radon entry and facilitate its removal. Radon mitigation shall comply with the requirements of EPA 402-R-94-009.

2.5.15 Soil Resistivity Testing

The Design-Build Contractor shall be responsible for all soil resistivity testing required for cathodic protection design of underground utilities.

2.5.16 Borrow

Borrow material shall be selected to meet the requirements and conditions of the particular fill or embankment for which it is to be used. Borrow material shall be obtained from borrow areas off base from approved sources, either private or public. The Contractor shall obtain from the owners the right to procure material, pay royalties and other charges involved, and bear the expense of developing the sources, including rights-of-way for hauling. Unless specifically provided, no borrow shall be obtained within the limits of the project site without prior written approval. Necessary clearing, grubbing, and satisfactory drainage of borrow pits and the disposal of debris thereon shall be considered related operations to the borrow excavation. Borrow pits shall be neatly trimmed and drained after the excavation is completed.

2.6 DEMOLITION AND REMOVALS

The Design-Build Contractor shall survey and stake out the project boundaries before starting work. The survey drawing provided in the RFP indicates existing conditions and locations of existing utilities. The Design-Build Contractor may utilize the utilities during construction operations and may incorporate the utilities as part of the final project. If these existing utilities are determined to be inadequate for construction operations or incorporation into the final facility, they will be upgraded as part of the construction project. However, if the Design-Build Contractor elects not to use the existing utilities, they shall be demolished and removed back to their respective mains as part of the construction project. Existing utilities that interfere with this project shall be relocated. The information shown on the survey drawing is the most recent data. The Design-Build Contractor shall be responsible for furnishing an independent topographic survey of the project site, and all line and grade surveys, and as-built surveys of the construction. All demolition debris shall be removed to the landfill off post.

3.0 CIVIL DESIGN CRITERIA

3.1 TRAFFIC CONTROL

See Section 01040 – SITE REQUIREMENTS for traffic control requirements.

3.2 GENERAL

(a) The haul route shall be from Gate 4 and POV access shall be from Gate 1 as illustrated on drawings.

(b) The Design-Build Contractor shall confine all work within the area as described herein. The limits of the Design-Build Contractor's construction staging and work area are illustrated on the plans. The Design-Builder's construction limits shall allow for aircraft tow vehicles to enter and exit the north faces of Buildings 47 and 48 during construction. The construction limits shall not impact any personnel fire exits for Buildings 47 and 48. The construction limits shall not impact the operation of Perimeter Road. The orientation of the site will be for aircraft access from the aircraft apron on the east and vehicle access from the perimeter roadway on the west side of the site at the rear of the hangar. The size of the site is a constraint. Full diligence must be maintained to meet the proper scope within the size of the site. Airfield clearance requires that the hangar and associated equipment does not encroach upon the asphalt pavement adjacent to the concrete aircraft apron. However, the asphalt pavement must be demolished as required to provide for an aircraft entrance into the hangar and to meet site drainage requirements. The hangar shall not be located within 15.24m (50 ft) of Buildings 47 and 48 or the combined north faces of buildings 47 and 48. The existing service road on the north side of Buildings 47 and 48 may be realigned, however, the parking adjacent to those buildings must remain. The hangar, associated equipment, associated features, and the like shall be set back a minimum of 9 m (30 feet) from Perimeter Road and shall not impact the existing alignment of perimeter road. As described in Section 01014, the hangar shall be located to allow for the construction of the corrosion control paint facility. The height of the structure cannot penetrate the runway airspace imaginary surfaces. All use of cranes or helicopters during construction must be coordinated with the Government.

(c) Building Setback Requirements: The building, access roads, parking areas and other features shall be located on the site in accordance with the DOD Antiterrorism/Force Protection (AT/FP) Construction Standards UFC4-010-01. The Government has determined that the Paint and Depaint Hangars are classified as uninhabited structures and as such there is not a minimum AT/FP separation between the two hangars. The Government has also determined that there is not a minimum AT/FP separation between the hangar and existing buildings 47 and 48.

(d) The facility shall include aircraft pavement to access the aircraft ramp; parking for vehicles including drainage, and exterior lighting; relocation of equipment and utilities as necessary and connection to base utilities.

(e) The project will require that buildings 431, 55, 60 and 51 be demolished in their entirety.

(f) Not used.

(g) The new project grading and storm water system shall not impact the surrounding buildings. Construction shall not impact the existing drainage system adjacent to the site.

(h) Excess soil shall be disposed of off-site in accordance with the Base Facility Standard.

(i) The Design-Build Contractor shall prepare a Foreign Object and Debris (FOD) Protection Plan and submit the plan to the Government for review and approval prior to performing any construction activities. The FOD Protection Plan shall be adhered to throughout all phases of construction.

3.3 ROADWAYS AND ACCESS DRIVES

(a) Connections to existing asphalt or concrete pavements shall be accomplished by saw cutting the adjacent existing pavement. The replacement pavement shall be IAW base standards.

(b) All pavement and radii dimensions in this section are from face of curb to face of curb. Minimum access drive width shall be 7.5 meters (24 feet). Minimum turning radius for all intersections shall be 6 meters (20 feet) except where fire truck access and semi-truck and trailer access is required. Design-Build Contractor shall consider the types of vehicles traversing and parking on these facilities. Vehicles shall include but not be limited to, passenger cars, emergency vehicles, garbage, fire trucks, military vehicles, delivery service, and utility vehicles. Design-Build Contractor shall provide traffic control signs and pavement markings. Parking stripes shall be white and handicap parking stripes shall be blue.

(c) Pavement structure shall be designed for actual vehicle loadings and frequencies. Access drives shall be asphalt pavement with graded crushed aggregate base course or Portland cement concrete. Pavement structure thickness shall be in accordance with TM-5-822-5, Chapter 1 and TM 5-822-5, Chapter 3. Pavement structure shall be designed for a 20-year pavement life.

(d) A loading dock access area shall be provided at the rear of the facility for standard maximum legal-sized semi-truck and trailer combinations, and shall be concrete paved.

(e) The Design-Build Contractor shall provide access roadway and dumpster pads to accommodate two GFGI dumpsters.

(f) Access roads shall be provided to allow fire vehicle access to the Hangar IAW ETL-02-15 and NFPA 1. Access lanes and roads shall be striped with 15 mm (6 inch) wide red stripes and 1.2 meter (4 foot) lettering indicating “Fire Lane – Do Not Park”.

(g) Roads, Streets, Access Drives, And Parking Areas: Geometric design of all roads, streets, access drives, and parking areas shall conform to applicable portions of TM 5-803-5, TM 5-803-14, TM 5-822-2, Radii, to back of curb, for intersections are standardized as follows for design:

Primary and Secondary Intersection 9 meters (30 feet)
Tertiary intersections (including residential streets) 6 meters (20 feet)
Access drives at end parking space 1.5 meters (5 feet)

Service Drives: Service drive design should be as simple as criteria, function, and location justify. Width of drives to unloading ramps or docks for usual types of trucks or tractor trailers are:

Trucks, SU = 3.6 meters (12 feet)

Semi-trailers, C43 to C50 = 4.8 meter (16 feet)
Semi-trailers, greater than C50 = 7.6 meters (25 feet)

Pavement at Loading Platforms: The minimum paved area depth in front of loading platforms at warehouses and storage facilities shall be as follows:

For van-type (SU) trucks = 20 meters (65 feet), including street width.
For semi-trailer, (C43 to C50) = 26 meters (85 feet), including street width (Depots = 29 meters (95 feet)).
The first 6 meters (20 feet) adjacent to the platform shall be concrete.

Pavement at Dumpster Pads: The first 4.5 meters (15 feet) of pavement adjacent to, and including dumpster pads, shall be concrete.

3.4 SECURITY FENCES

(a) Requirements: Fencing shall be IAW Military Handbook 1190 and AFM 86-2 and the requirements of Section 01040.

(b) Temporary Fencing: The Design-Build Contractor shall erect a temporary flight line fence to isolate the construction site from the secure side of the base. The temporary fencing shall also prevent FOD from entering the adjacent aircraft movement areas and shall have fabric IAW Section 01040.

(c) Permanent Fence: Flight line fencing shall have 6 meter (20 feet) of clear space on the secure side and 9 meter (30 feet) of clear space on the unsecure side. Flight line fencing shall not be connected to buildings, equipment sheds, or similar features. The existing fence shall be extended around the rear (west side) of the hangar to form a continuous fence line.

(d) The Design-Build Contractor shall maintain a continuous, secure Flight Line fence at all times.

3.5 VEHICLE PARKING

(a) Provide vehicle parking immediately adjacent to building for 3 GOV, 2 POV and 1 handicap spaces. Ramps shall be provided for handicapped access.

(b) All parking shall be off-street parking. Handicap parking stalls shall be provided. Area lighting and landscaping shall reinforce the parking area in accordance with the Robins AFB Installation Design Guide while meeting functional and safety requirements.

(c) Parking areas shall be paint striped and adequately drained. Parking stalls shall be 2.74 meters by 5.64 meters (9 feet by 18.5 feet). Paint markings shall be 100 mm (4 inches) in width. Traffic isles shall be 7.315 meters (24 feet) in width.

(d) Parking area drainage shall sheet flow to inlets then into the storm collection system. Parking area slopes shall be adequate to provide proper drainage. Drainage shall not sheet flow off the pavement into grassed areas.

(e) Parking area design shall conform to AFM 88-7, Chap. 5. Parking stalls and access drives shall be asphalt pavement with graded crushed aggregate base course. Pavement structure thickness shall be in accordance with TM 5-822-5, Chapter 3. The pavement structure shall be designed for a

20-year pavement life. As a minimum, the Design-Builder shall provide 40 mm (1-1/2 inches) of asphalt and 150 mm (6 inches) of aggregate base.

(f) The Design-Build Contractor shall provide area lighting for the parking area as described in Section 7.

(g) One parking space shall be provided adjacent aircraft entrance of the hangar to park one Calivar (boom-type vehicle for washing aircraft). The space shall be concrete.

3.6 SIDEWALKS

(a) Connections to existing concrete pavements shall be accomplished by saw cutting the adjacent existing pavement.

(b) Sidewalks shall be a minimum 1.83 meters (6 feet) wide. Sidewalks shall be widened as necessary to meet building entrance and exit way widths. Sidewalks shall be wire mesh reinforced concrete with a minimum nominal thickness of 100 mm (4 inches) with 2,109,300 kilograms per square meter (3000 psi) compressive strength. Contraction joints shall be spaced at 1.83 meters (6 feet) on center and expansion joints shall be placed at 15.24 meters (50 feet) on center and at the intersection of walks and curbs. Minimum cross slope on sidewalks shall be 2 percent.

(c) Ramps shall be provided for handicapped access. Site access for the physically disabled shall be as required by ADAAG, UFAS and FS 795.

(d) Provide an ample functional system of walks connecting structures, operational areas, parking areas, streets and other walks as pedestrian traffic demands. Design of pedestrian walks shall be in compliance with TM 5-803-5, TM 5-803-14, TM 5-822-2, and criteria presented herein.

(e) Walks paralleling buildings shall be located beyond the eave drip line and at least 1.5 meter (5 feet) from the foundation. Walks paralleling parking areas shall abut the back of the curb.

3.7 GRADING

(a) Finished Floor Elevations: A building's finished floor elevation shall be a minimum of 150 mm (6 inches) above the highest point of the adjacent outside finished grade (excluding the aircraft ramp to the facility), unless there is an overriding technical reason to deviate.

(b) Finished grade shall slope a minimum of 4 percent away from the new building for a distance of 2 meters (6 feet) with the exception of the aircraft hangar access apron which shall be graded as described below.

(c) Roads, Streets, and Access Drives: Gradients for roads, streets and access drives shall be as outlined in TM 5-822-2. Grade changes in excess of 1% shall be accomplished by means of vertical curves. The length of vertical curves shall be determined in accordance with TM 5-803-14, and TM 5-822-2. Profiles are mandatory for vertical control of centerline gradients.

(d) Parking Areas: Pavement grades shall provide positive surface drainage with a 1-% minimum slope in the direction of drainage. Slope grade in direction of parking shall be 1-1/2% maximum for 90-degree parking, 1% maximum for 60- and 45-degree parking. Slope grade perpendicular to direction of parking 5% maximum for bituminous or concrete surfaces.

(e) Walks: The grade of walks shall be in accordance with TM 5-803-14. Steps in walks should be avoided, but when used shall be in compliance with TM 5-822-2. Walks and ramps serving facilities that are to be accessible to and usable by the physically handicapped shall meet the requirements of the Uniform Federal Accessibility Standards.

(f) Airfields: Gradients shall be IAW UFC 3-260-01.

(g) Finish Grade Contours and Spot Elevations: Finish grade contours at 0.25-meter (1 foot) intervals and spot elevations shall be provided to construct all site development features to elevations within the above grading criteria and tolerances as specified in the guide specifications. Spot elevations on the drawings should be sufficient so that interpolation between contours is not required for structures, grading or paved areas; some examples are: corners of paved areas, low points, high points, flow lines of swales or ditches, changes in degree of slope and grading at corners of buildings to ensure positive drainage away from the building. The use of cut or fill symbols in lieu of finish grade contours is not permitted.

3.8 AIRFIELD PAVEMENT

(a) General: The design of the pavement structure shall be accomplished by the Design-Build Contractor. All airfield, parking, service vehicle and other pavements shall be rigid pavement. Flexible pavement shall not be permitted for use.

(b) A concrete joint layout plan shall be required for all concrete pavements. Joint spacing, joint types, and joint grading shall be shown. Concrete pavement shall be non-reinforced except for odd shaped slabs. The number of joints shall be kept to a minimum by using the greatest joint spacing which will effectively control cracking. The maximum length to width ratio of the slabs shall be 1.25. Joint sealant type shall be preformed compression seal.

(c) Rigid Pavement: Design and details of construction of rigid pavement shall be in accordance with UFC 3-260-02. The design shall also be performed utilizing the Pavement-Transportation Computer Assisted Structural Engineering (PCASE) software program developed by the Airfield & Pavements Division, Engineering Research and Development Center, Waterways Experiment Station. The software program is available at www.pcase.com.

(d) Design Criteria: The hangar access apron pavement shall be designed as Medium Load pavement and Class C traffic area.

(e) An expansion joint(s) shall be provided between the hangar and the new aircraft apron, and between the new apron and the existing concrete airfield ramp.

(f) Existing concrete pavement that is removed and replaced shall match the existing pavement section.

3.9 AIRCRAFT APRON PARKING AND TAXILANE STRIPING

To accommodate the movement of aircraft to the hangar some of the existing aircraft parking positions will be lost on the apron. The total number of positions to be demolished for both hangars are limited to three C-141 and three C-130 positions. The apron shall be restriped to accommodate towing C-5 aircraft to the hangar from the taxilanes east of the site. A taxilane shall also be provided to tow C-130 aircraft south of the hangar. Since aircraft

are being moved by towing the design may provide for a minimum wingtip clearance of 7.6 meters (25 feet) from aircraft and facilities. The apron shall also be striped to reroute the vehicle services road in front of the hangar. Existing striping shall be removed by water blasting. The striping plan shall be IAW UFC 3-260-01.

3.10 UTILITIES

(a) Coordination of all site work on the project, including utility work, is the responsibility of the Design-Build Contractor. It is the Design-Build Contractor's responsibility to confirm the specific locations of the existing utilities and to design and construct new utility services for the new buildings. All utilities, including electrical service, telephone and cable TV, shall be installed underground. New underground utility lines, including appurtenant structures such as valve boxes, manholes, vaults, etc. shall not be located under pavement, road shoulders or drainage ditches to the maximum extent practicable. Unless otherwise approved, placing utilities and culverts under existing roads shall be by jack and bore.

(b) Backflow prevention valves are referenced in Paragraph 6.0 of this section. Post indicator valves, transformers, electric switches, telephone/cable boxes, manholes, irrigation pump and controller, etc. shall be located in locations not immediately apparent to the facility users or personnel passing by the site. New utility lines shall not be located within 5 meters (15 feet) of the footprint of any future building as shown on the site plan.

(c) Unless otherwise specified, all utility outages shall be accomplished between 1800 Friday and 0600 Monday. All outages shall be coordinated in writing through the Government with written approval.

(d) No physical connections shall exist between sewer and water supply systems. Sewer and water lines shall be at least 3.05 meters (10 feet) apart horizontally, except where the bottom of the water pipe is at least 300 mm (12 inches) above the top of the sewer; the horizontal spacing may be a minimum of 1.83 meters (6 feet). Where conditions require a sewer to cross above a water line, the sewer shall be constructed of cast iron, steel, or other pressure pipe for 3.05 meters (10 feet) each side of the crossing and without the occurrence of a sewer pipe joint immediately above the water pipe. The cover for sanitary sewers shall be at least 762 mm (30 inches) deep to protect the pipe from superimposed live loads of ordinary traffic.

(e) Roads and driveways shall not be crossed by open cut unless approved. Wherever boring is impractical, street crossings shall be limited to three days maximum for any utility crossing roadway (including trenching, compaction, and replacement of existing pavements). Design-Build Contractor shall provide steel matting sufficient to carry traffic loading over excavated area.

(f) All excavations, trenches, open manholes, etc., shall be properly shored, braced, barricaded or guarded. Warning lights or other illumination maintained from sunset to sunup shall be placed at all excavations that are adjacent to pedestrian or vehicle thoroughfares.

(g) Design-Build Contractor personnel shall not enter manholes, tunnels, tanks, or confined spaces until such entry complies with the requirements of OSHA 1926.21 (6)(I).

(h) Utility lines shall be marked with plastic marking tape. Plastic marking tape shall be acid and alkali-resistant polyethylene film, 150 mm (6 inches) wide with minimum thickness of 0.01 mm (0.4 mil). Tape shall have a minimum strength of 12.5 MPa (1800 psi) lengthwise and 10.5 MPa (1500 psi) crosswise. The tape shall be manufactured with integral wires, foil backing or other means to enable detection by a metal detector when the tape is buried up to 1 meter (3.2 feet) deep. The tape shall be of a type specifically manufactured for marking and locating underground utilities. The metallic core of the tape shall be encased in a protective jacket or provided with other means to protect it from corrosion. Warning tapes shall be installed directly above all buried pipes or wires, at a depth of 450 mm (18 inches) below finished grade. Tape color shall be as specified below and shall bear a continuous printed inscription describing the specific utility.

Tape Color:

Red:	Electric
Orange:	Telephone, Telegraph, Television, Police, and Fire Communications
Blue:	Water Systems
Green:	Sewer Systems
Yellow:	Gas, Dangerous Materials

(i) In addition to the plastic marking tape, tracer wire shall also be provided for all new underground utilities. Tracer wire shall be provided for all pipelines, including force mains but excluding storm drain and sanitary sewer lines. Tracer wire shall be provided for all electrical and communication conduits and direct buried cables. Tracer wire shall be installed on the bottom of the trench just to one side of where the pipe, conduit, or cable contacts the trench bottom. The wire shall run continuously between and terminate at valve boxes on water and gas lines, regulator stub-ups on gas lines, sprinkler heads and valve boxes on sprinkler system lines, panel boxes on electrical lines, and other such aboveground appurtenances. Each end of the wire shall have an additional length of at least 0.6 m (2 feet) coiled up in the appurtenance. Tracer wire shall be No. 10 AWG Cu with nicked TW insulation and of a type specifically manufactured for locating underground utilities. Insulation shall be solid yellow in color. Tracer wire shall be subject to approval by the Contracting Officer.

(j) Potable water source, sanitary sewer, and industrial waste lines, gas, steam, condensate, electric and communication shall be connected to base utility systems. Refer to Sections 6.0 and 7.0 for specific mechanical and electrical requirements, respectively.

(k) Any utilities or equipment that need to be relocated to construct the facility shall be accomplished in such a manner as to minimize the impact on the surrounding area.

(l) Utility structures shall be designed to accommodate the traffic loadings for the area in which the structures are placed.

(m) Area master meters shall be provided for water, gas and electrical utilities. Water, electrical, and natural gas meters, and lift stations shall transmit usage data to the existing Robins AFB SCADA system. Water, electric, and natural gas are transmitted via telephone line, lift stations for IW and sanitary are by radio. Meters, interface devices and programming of the existing host shall be furnished as required to accomplish complete utility metering and remote usage monitoring as required by the installation’s utility managing agency.

(n) The covers for all utility structures and valve boxes shall be clearly and permanently marked to indicate the type of utility. The marking shall be cast or welded onto the cover. If the cover is steel, the marking shall be welded and then the entire cover shall be galvanized.

3.11 WATER

(a) The Design-Build Contractor shall design and construct the new water supply utility services for the new facility. The Design-Build Contractor shall provide water service lines, new water distribution lines (as required), and connection to the existing water mains. The water facilities shall be designed and constructed in accordance with the criteria contained herein. Placement of a buried utility main under a new building shall not be allowed. Minimum earth cover for the new utility lines shall not be less than 915 mm (36 inches). Every effort shall be made to place waterlines with cover depths between 915 mm (36 inches) and 1,220 mm (48 inches) to minimize congestion at a uniform depth.

(b) The Government anticipates that the Design-Build Contractor will connect the new water laterals to the existing water distribution system and that sufficient quantity will be available for domestic and industrial uses. The design of the water distribution mains and service lines shall provide adequate quantity at sufficient pressure for domestic use. Fire Protection is not considered to be a domestic use. The Design-Build Contractor shall determine minimum pressures in accordance with applicable plumbing and fire protection criteria.

(c) The mains shall be designed and installed in accordance with NFPA 24 and applicable American Water Works Association (AWWA) standards. Water mains shall follow existing streets or utility corridors. The design shall limit installation beneath pavement.

(d) Design of the service lines shall be in accordance with the National Plumbing Code and applicable AWWA standards. A curb stop or valve shall be installed near the point of connection to the main. Water service lines shall be equipped with suitable meters. Metering of fire service lines is not required.

(e) The Design-Build Contractor should verify that the pressure, quantity, and quality of the existing water supply are adequate to support all equipment within the new facility. If they are not adequate, the facility design should include the items necessary to provide the required pressure, quantity, and quality; i.e. booster pumps, water softeners, etc.

(f) In lieu of the requirements in the Robins AFB Base Facility Standard, water lines shall be ductile iron. The interior of potable water lines shall be IAW AWWA standards.

(g) The Design-Build Contractor shall have an independent test company test and certify the operation of each back-flow preventer as referenced in Paragraph 6.0.

(h) Interior and outside fire protection shall be designed in accordance with MILITARY HANDBOOK 1008C (MIL-HDBK 1008C) and Engineering Technical Letter 02-15 (ETL 02-15). Fire flow test data dated 2-11-03 from a hydrant in the vicinity of the site areas follows:

Hydrant No. F35

Static pressure = 468 kPa (68 psig)
Residual pressure = 414 kPa (60 psig)
Flow = 70.0 L/s (1,110 gpm)

From this data and the specific fire protection requirements, the Design-Build Contractor shall determine the need for additional water supply components such as fire pumps, water storage, or new connection to off-site water mains (perhaps several blocks from the building site).

(i) The Design-Build Contractor shall provide the required water flow and pressure for the interior and outside (hose stream) demand. Fire pumps and storage shall be provided as required to meet the required water demand. Connection to off-site water mains shall be considered the most desirable solution to water supply needs. Water storage (if required) shall be designed and installed in accordance with AWWA D100.

(j) The fire sprinkler supply line shall include a post indicator valve with a tamper switch wired to the building fire alarm panel.

(k) The Design-Build Contractor shall provide fire hydrants around hangar IAW ETL 02-15 and the hydrants shall be protected by bollards.

(l) Refer to Section 9 for fire protection requirements inside the building.

3.12 SANITARY SEWER

(a) The Design-Build Contractor shall design and construct the new wastewater utility services for the new facility. The Design-Build Contractor shall also provide new wastewater building laterals, new sewage mains (as required), and connection to the existing sanitary sewerage system. The sewage facilities shall be designed and constructed in accordance with the criteria contained herein. Placement of a buried utility main under a new building shall not be allowed. Minimum earth cover for the new utility lines shall not be less than 680 mm (27 inches).

(b) The wastewater collection and conveyance system shall be designed in accordance with the Water Pollution Control Federation Manual of Practice No.FD-4, Design of Wastewater and Stormwater Pumping Stations, and No. FD-5, Gravity Sanitary Sewer Design and Construction. In addition, the designer shall comply with specific State and local regulations that apply.

(c) The existing Sanitary Lift Station No. 24 may be impacted by the construction of the Depaint Hangar. The existing lift station is equipped with two ABS pumps, Model AFS200-163A-6, 59.9 L/s (950 gpm), TDH 11.3 m (37’), 24 Hp, 460 V, 1750 rpm, constant speed drives. If a sewage pump station is necessary, the Design-Build Contractor shall provide (as a minimum requirement) a duplex submersible sewage pump station with a 1,524-mm (60 inch) minimum-diameter reinforced concrete wet well, with aluminum cover. The pumps shall be manufactured by Flyght. All electrical components and controls shall be included. The lift station shall also include SCADA communication compatible with Robins AFB SCADA system, level sensor rod, fenced enclosure or lockable lid for wet well and controls, rails for pump removal, and hoist beam or apparatus. Level floats shall not be used. A flow meter shall be provided and shall transmit data through the SCADA. SCADA frequencies are: TRANS M941.49375, M941.48125; REC M932.49375, M932.48125.

(d) The wastewater conveyance system shall comply with all the above requirements and shall be compatible with the wastewater to be conveyed. The materials specified shall withstand the effects of the wastewater and not deteriorate as a result of pollutants in the wastewater.

(e) In lieu of the requirements in the Robins AFB Base Facility Standard, sewer gravity lines outside the building shall be PVC and force main lines shall be ductile iron pipe.

(f) Regardless of sewage quantity and for maintainability, the minimum size pipe provided shall be 152 mm (6 inches) for building connections and 203 mm (8 inches) for all other sewers. Pressure pipe may be less than 152 mm (6 inches).

(g) Adequate manholes and cleanouts shall be provided for maintainability.

(h) Crossing potable water lines and sewage lines shall be installed IAW AFM 88-10, Chapter 6.

3.13 INDUSTRIAL WASTE

(a) An industrial waste collection system must be designed to accommodate industrial waste generated by the Corrosion Control Paint Facility referenced in Section 01014 and the future wash rack by others that will be placed in front of the De-Paint Hangar. Placement of a buried utility main under a new building shall not be allowed. Minimum earth cover for the new utility lines shall not be less than 680 mm (27 inches).

(b) The industrial wastewater collection and conveyance system shall be designed in accordance with the Water Pollution Control Federation Manual of Practice No. FD-4, Design of Wastewater and Stormwater Pumping Stations, No. FD-5, Gravity Sanitary Sewer Design and Construction, and AFM 88-11 volumes 1 and 2. In addition, the designer shall comply with specific State and local regulations that apply.

(c) Not used.

(d) Industrial waste piping shall be high-density polyethylene (HDPE). The pipe shall be pressure tested to 1,103 kPa (160 psig). The piping will transport fluid wastes generated in Corrosion Control Paint Facility to the existing Industrial Waste Force Main collection system illustrated on the site plan south of Building 54. The SDR for any gravity portions of the system shall be the same as the respective pressure pipe. The connection to the Industrial Waste force main shall be made downstream of the Industrial Waste Pump Station No. 6. The existing Industrial Waste Lift Station No. 6 is equipped with two ABS pumps, Model AF90-4-2510-4, 11.0 L/s (175 gpm), TDH 23 m (76’), 12 Hp, 460 V 1750 rpm, constant speed drives.

(e) Wastes shall be identified, both in characteristics and quantities, in project design analysis, and compared to the capabilities of the industrial wastewater treatment plant.

(f) Materials for industrial waste drains, sewers, tanks, pumps, and other features shall be carefully selected for suitability based on worst case expected waste characteristics. Once selected, these materials shall be clearly and thoroughly specified in project specifications. Material substitutions after completion of design is not acceptable.

(g) Where necessary, pretreatment at the source shall be provided. This may include physical, chemical, or a combination pre treatment. Flammables and troublesome solids shall be removed at the source.

3.14 STORM DRAINAGE

(a) The Design-Build Contractor shall evaluate the flow of storm water runoff to and from the site and ensure that the flow of water will be properly moved from the site to the storm drainage system.

(b) Building downspouts shall connect to an underground storm drain collection system.

(c) The site storm drainage system shall be designed for a 10-year return storm frequency. No ponding shall occur for the 10-year event. Storm drainage system design shall be checked for a 100-year return event to insure no flooding or adverse impacts occur down stream. Storm drainage design shall be in accordance with TM-5-820-4 and AFM 88-5.

(d) The storm drain collection system may consist of grassed swales, concrete inlet drop or curb inlets, concrete headwall and pipe systems. The proposed system shall tie to the existing grassed ditches or pipe systems. Minimum pipe velocities shall be 0.6 m/s (2 feet per second) and the maximum shall be 1.5 m/s (5 feet per second) with outlet erosion protection. The minimum pipe size for an open pipe system shall be 0.46-meter (18 inches) and 0.38-meter (15 inches) for a closed system.

(e) The allowable pipe types shall include concrete pipe, Type III or IV, and fully coated corrugated metal pipe as required. Pipe joints shall be water tight with gaskets.

(f) Concrete inlets/catch basins may be poured in-place or precast concrete. Metal grates or manhole covers shall be galvanized. Cast or ductile iron manhole covers and grates may also be used. Basins shall have 75-mm (3-inch) weep holes cast into the walls. The exterior of the weep holes shall receive a 6-mm (1/4-inch) wire mesh with a 300-mm (12-inch) width belt of crushed rock. Precast manhole or inlet rings shall connect with industry standard gaskets. Storm drain pipes shall be grouted into the concrete structures to provide a watertight connection.

3.15 GAS DISTRIBUTION SYSTEM

(a) Provide a gas distribution system complete with master meter connected to the existing system and designed in accordance with local codes, utility company requirements, and installation requirements. Gas distribution system shall comply with the requirements of NFPA 54, National Fuel Gas Code. Connection to existing gas distribution system shall be made at the location determined by the Design-Build Contractor. Natural gas main entrance to RAFB is located near Bldg 54. Gas main pressure is 414 kPa (60 psig) and shall be considered to have adequate capacity to serve this facility. Final tie-in point and gas flows shall be coordinated during detailed design. Where new structures are located above existing gas mains, existing gas mains shall be relocated. The Design-Build Contractor shall bear the cost of installation and relocation of all utilities. When connecting to existing steel piping system, provision shall be made to ensure that the integrity of the cathodic protection is not compromised. Shutoff valves shall be polyethylene (Rockwell) and shall be provided in a valve box on the exterior of the building. A gas regulator shall be provided, located at least 4.6 meters (15 feet) from the air conditioning system equipment. The regulator shall accommodate both natural gas and propane-air. Gauges shall be provided on both sides

of the regulator to measure PSI-Gauge on the high side and inches-water on the low side. The building service entrance shall be installed at a height sufficient to allow for installation of the gas meter. Installation of gas piping shall be in accordance with ANSI B31.8, Gas Transmission and Distribution Piping Systems. UFGS Section 02556 GAS DISTRIBUTION SYSTEM shall be the basis for the gas distribution system.

(b) Drips shall be installed at the low points immediately following reduction from high-pressure to medium-pressure (at supply points) and at occasional low points throughout the system to provide for blowing out the lines.

(c) Plug valves shall be installed so that interruptions to service can be confined to the building.

(d) Lines shall not be placed under any buildings. Lines shall be placed with a minimum of 610 mm (24 inches) of earth cover. Protective casings shall be provided to protect lines from superimposed street or heavy traffic loads. Tracer wire shall be installed with polyethylene piping. Tracer wire shall be terminated in valve box and at riser. The Design-Build Contractor shall relocate any portion of the existing gas main required to construct the new facility to comply with the directives found in this paragraph.

(e) Materials and appurtenances shall be free of defects and suitable to accomplish the stated objectives of gas distribution systems. Pipe shall be polyethylene type PE 3408 with a SDR of 11 conforming to ASTM D 2513, thermoplastic gas pressure pipe, tubing, and fittings, or with fitting complying with either ASTM D 2513, ASTM D 3350, or ASTM D 2683. If pressure exceeds PE 3408 capability, ASTM A53B Carbon Steel Pipe (minimum schedule 40) shall be used. All aboveground or exposed piping shall be ASTM A53B carbon steel. Below ground piping shall be protected IWA Robins Base Facility Standards. Connections to metal pipe shall comply with American National Standards Institute (ANSI) B16.5 or manufacturer's recommended standards.

(f) Prove that the entire system of gas mains and service lines is gastight by an air test, in accordance with ASME B31.8. The test shall continue for at least 24 hours between initial and final readings of pressure and temperature with the initial reading at least 1 hour after full test pressure.

3.16 COMPRESSED AIR SYSTEM

(a) Provide a compressed air distribution system connected to the existing system and designed in accordance with local codes and installation requirements. Connection to existing compressed air distribution system shall be made at the location determined by the Design-Build Contractor. Where new structures are located above existing compressed air lines, existing compressed air lines shall be relocated. The Design-Build Contractor shall bear the cost of installation and relocation of all utilities. A pressure-regulating valve shall be provided at the point of use to maintain operating pressure. Installation of compressed air piping shall be in accordance with ANSI B31.8, Gas Transmission and Distribution Piping Systems and ASTM D 2774 Standard Practice for Underground Installation of Thermoplastic Pressure Piping.

(b) Lines shall not be placed under any buildings. Lines shall be placed with a minimum of 610 mm (24 inches) of earth cover. Protective casings shall be provided to protect lines from superimposed street or heavy traffic loads. Tracer wire shall be installed with piping. Tracer wire

shall be terminated in valve box and at riser. The Design-Build Contractor shall relocate any portion of the existing compressed air main required to construct the new facility to comply with the directives found in this paragraph.

(c) Materials and appurtenances shall be free of defects and suitable to accomplish the stated objectives of compressed air distribution systems. Pipe shall be polyethylene type PE3408 with a SDR of 7.3 conforming to ASTM D 2513, thermoplastic gas pressure pipe, tubing, and fittings, or with fitting complying with either ASTM D 2513, ASTM D 3350, or ASTM D 2683. Connections to metal pipe shall comply with American National Standards Institute (ANSI) B16.5 or manufacturer's recommended standards.

(d) Prove that the entire system of gas mains and service lines is airtight by an air test, in accordance with ASME B31.8 and manufacturer’s recommendations. The test shall continue for at least 24 hours between initial and final readings of pressure and temperature with the initial reading at least 1 hour after full test pressure.

3.17 STORMWATER POLLUTION PREVENTION PLAN

A Stormwater Pollution Prevention Plan (Best Management Plan) shall be designed and included in the design submittals shown in Section 1012. The plan shall be in accordance with The Manual for Erosion and Sediment Control in Georgia. The approved plan shall be onsite at all times for inspection by EPA, Georgia Department of Natural Resources (GA DNR), and Robins AFB environmental personnel. All activities in the approved plan shall be implemented. The Design-Build Contractor shall control erosion and sedimentation during and after construction. Sedimentation of adjacent sites or downstream ditches will not be permitted.

3.18 GEOGRAPHIC INFORMATION SYSTEM (GIS) DATA

Planimetric data created, modified, or updated as a result of services provided in this RFP shall be provided to the Government in an ESRI GIS format. Data shall be submitted in conformance to the SDSFIE 2.1 data standards. Appropriate Federal Geographic Data Committee (FGDC) compliant metadata is also required. Job duties that are likely to occur include, but are not limited to, CADD to GIS data conversion, data documentation (metadata), data creation, data updates and deletions (additions, movement or removal of infrastructure associated with the site), data integration with any existing GIS databases or data warehouses and map production. GIS Deliverables for this project are likely to include hard copy maps and associated electronic map files in the above mentioned GIS format, newly created or updated GIS databases, metadata, and any other documentation deemed necessary.

4.0 ARCHITECTURAL DESIGN CRITERIA

4.1 SUMMARY

This section provides general architectural design criteria to be utilized for proposal and design purposes.

4.2 DESIGN REQUIREMENTS

4.2.1 Requirements and Objectives

(a) Requirements: The Air Force’s primary requirement for this project is to design and construct a quality facility to efficiently and effectually strip medium and large aircraft (optimize around C-5 aircraft). The

facility shall provide the necessary space to perform stripping operations, contain the necessary shop and support space, and house the appropriate administrative personnel to enhance mission effectiveness and protect the environment. The design and construction shall incorporate quality materials and promote energy conservation that will be of value to the Air Force in the foreseeable future.

Robins Air Force Base’s primary requirement is to construct an environmentally safe aircraft depainting (strip) facility to perform corrosion control and ensure that Robins Air Logistics Center can support mission readiness of all presently assigned aircraft. This facility must incorporate the most modern paint stripping technologies. This will allow the base to significantly reduce the use of toxic chemical stripping agents, which are hazardous to both human health and the environment.

(b) Objectives: A number of objectives shall be met to achieve the goal of this project. The first objective is to construct a new, energy-efficient building to house the equipment, provide adequate space and a modern work environment for personnel to depaint aircraft. The contractor shall design the facility taking into account maintenance including access requirements (with tools, materials, equipment, etc.) to equipment (freight elevator, ladders, doors, etc.) and piping (overhead valves), pipe routing (rack on walls, etc.) and ensuring that maintenance costs have been economized.

The second objective is to minimize the impact of construction in this area. Outages to tie into existing utilities, and all construction work must be accomplished in such a manner as to allow work to continue in the existing facilities. Any utilities or equipment that need to be relocated to construct the facility shall be accomplished in such a manner as to minimize the impact on the surrounding area.

The Air Force's objectives are to deliver a project on time, within available funds and in a safe manner, which satisfies the user's needs.

4.2.2 Project Narrative

(a) Depaint Facility: The facility is designed for the depainting of large and medium aircraft, including the C-5, C-17, 767, KC-135, 707 and the C-130 and shall contain an hangar floor for stripping paint (dry processes), administrative space, building support, production support, and special support areas. The hangar floor shall be large enough to strip a C-5 aircraft with minimum clearances and space where the dry media stripping system (DMSS) can be used to depaint aircraft. The administrative space shall consist of seven private office spaces, conference room and copier/fax/storage rooms. The building support area includes space for mechanical room (including supply and return plenums), fire protection room, electrical room and communications room, and boiler room (there is a chiller room in the process cooling option). The production support area shall consist of a blast media reclaim/ recovery room, blast media unload/storage space, equipment storage, PPE cleaning, initial accumulation point room, and a recycle material storage room. The special support areas shall consist of space for a break room, clean and contaminated locker areas (including showers), restrooms, janitor closet, and the Issue Room/Pharmacy. An air shower shall be installed as part of the decontamination process at any transition point between the contaminated areas and the clean areas. The contaminated areas include the Hangar floor and the Production Support areas. The clean area shall include administrative space and special support areas, excluding the contaminated locker area.

This facility's programmed area is 9850 SM (106,025 sf). This steel framed depaint facility will be sited to be next to the paint facility of similar size.

The new facility shall incorporate the following design concepts:

- Shop layout shall provide efficient workflow to reduce personnel costs (See Volume 3 of 3, Appendix Q).

- The building shall incorporate energy conservation through the use of efficient wall and roof insulation systems.

- The building shall promote low maintenance by utilizing durable materials for construction (20 years for roof, siding, and main electrical/mechanical components, etc.).

- The building shall meet ADA requirements for the following spaces: Restrooms, break area, and office/administrative areas.

- Clearances: The aircraft sizes for the hangar floor are as follows:

	WING SPAN	LENGTH	HEIGHT
KC-135	39,807mm (130'-7")	41,514mm (136'-2")	12,711mm (41'-8")
767	47,570mm (156'-1")	48,520mm (159'-2")	16,130mm (52'-11")
707	44,420mm (145'-9")	46,610mm (152'-11")	12,830mm (42'-1")
C-17	52,200mm (171'-3")	53,040mm (174'-0")	16,790mm (55'-1")
C-130	40,410mm (132'-7")	34,370mm (112'-9")	11,660mm (38'-3")
C-5	67,870mm (222'-8.5")	75,550mm (247'-10")	19,850mm (65'-1.5")

*8

- Clearances for largest aircraft shall be as follows (includes clearances from equipment, i.e., eight future teleplatforms (aft, fore, and along each wing), DMSS equipment, parked support equipment, etc.):

  Horizontal (C-5):
  Wing tips – 6,096mm (20'-0") min. clear area (Min. 3048mm (10'-0") at hangar door)
  Aircraft Nose – 6,096mm (20'-0") min. clear area

  Aircraft Tail (nose-in) – 6,096mm (20'-0") min. clear area
  Aircraft Tail (tail-in) – 3,048mm (10'-0") min. clear area
  Engines – 6,096mm (20'-0") min. clear area

  *(6)
  Vertical (C-5): 3,048mm (10'-0") clear area for aircraft on jacksFor a tail-in configuration, the minimum vertical clearance shall be 1524mm (5'0") to a draft curtain that is oriented perpendicular to the axis of the aircraft. For a draft curtain that is parallel to the axis of the aircraft, the minimum vertical clearance shall be 3,048mm (10'0").

(b) Existing Buildings to be demolished: Buildings 51, 55, and 60 are to be demolished in their entirety and site completely cleared of any sidewalks, foundations and associated roadways for new depaint facility.

Building 51 is a pre-engineered metal building with concrete slab approximately 9144 mm x 21,336 mm (30’ x 70’) in size with an eave height of approximately 4880 mm (16’-0”). Building 55 is an existing steel framed hangar approximately 3530 SM (38,000 sf) in size with metal siding and metal roofing system. Facility includes large hangar doors and door pockets. Building 60 is a pre-engineered metal building approximately 18,288 mm x 21,336 mm (60’ x 70’) in size with eave height of approximately 4880 mm (16’-0”) attached to a concrete slab.

(c) Renovation of Building 44: Building 44 is an existing hangar building approximately 73,152 mm x 45,720 mm (240’ x 150’) in size will be renovated to perform the functions of the demolished Building 55. Renovations include a new addition containing a women’s restroom (three stalls and three sinks), an open office area for 15 people and space to enlarge the existing break room. Renovations within Building 44 include 74 SM (800 sf) of caged area (4M (13’) minimum height), 84 SM (900 sf) caged area for two condensed storage units, office space for five people for CLSS (Combat Logistics Support Squadron) and non-CLSS operations, new access to existing men’s restroom and break room without going through CLSS space and a 10-SM (100 sf) new office on hangar floor for two people. Provide 1525 mm wide x 2600 mm high (60” wide x 102” high) gates in caged areas. Building 44 renovation to be completed before Building 55 demolition. Building 44 renovations shall include compliance to current applicable building codes.

4.2.3 Space Requirements

The areas shown below are for guidance in preparing the project. The Design-Build Contractor shall be responsible for determining the actual amounts of space required for each area based on criteria. Design-Build Contractor has discretion to add additional spaces if required, i.e., DMSS control room, communications closet, etc.

Space Type	Area SM (sf)	Remarks
Hangar Floor		Depaint Area with necessary clearances as needed around C-5 aircraft for the DMSS system. Hangar area need not be a single cubical shape. C-5 aircraft may enter hangar either nose-in or tail-in (tail-in is preferred and will be part of the evaluation). Space required for hydraulic mule storage within hangar floor.
Hangar including Door Pockets	5665 SM (61,000 sf)	
ADMINISTRATIVE	150 SM (1615 sf)	Office space for private offices (one WS-12, five WS-9), a technical order office, a conference room for 12 to 15 people and a fax/copier room. Conference room and one office (WS-9) to have visual access to hangar floor.
BUILDING SUPPORT		
Electrical Room	75 SM (800 sf)	

Space Type	Area SM (sf)	Remarks
Mechanical Room (including supply/return plenums, air compressors, boilers, etc.)	1000 SM (10,760 sf)	
Fire Protection Room	45 SM (485 sf)	
Communications Room	10 SM (110 sf)	Communications equipment
Chiller Room	*422 SM *(4,500 sf)	*(Process Cooling option)
Boiler Room	85 SM (900 sf) *290 SM *(3,150 sf)	*(Process Cooling option)
PRODUCTION SUPPORT		
Blast Media Reclaim/Recovery Room	160 SM (1720 sf)	DMSS Equipment (Reclaim/recovery System) This space needs forklift and truck dock access.
Blast Media Unload/Storage Room	160 SM (1720 sf)	Storage for full load of media adjacent to Blast Media reclaim/Recovery Room. This space needs forklift and truck dock access.
Recycle Material Storage	150 SM (1615 sf)	Storage (one month) for recycled material. This space needs forklift and truck dock access.
Initial Accumulation Point	10 SM (110 sf)	Collection of contaminated solvent, Rags, and other similar small items. This area shall be located in hangar floor and will be defined by painted stripe on floor surface with space for three 208-liter (55-gal) drums.
PPE Cleaning	20 SM (215 sf)	10 people min. cleaning respirators at one time.
Equipment Storage	50 SM (540 sf)	
Wash Rack Equipment	40 SM (430 sf)	Space for wash rack equipment, steam cleaner, etc. Space to have exterior door of adequate size to accommodate equipment.
SPECIAL SUPPORT		
Break Area	100 SM (1080 sf)	Size for 50 people
Issue Room/Pharmacy	120 SM (1290 sf)	Storage of PPE items w/counter and shutter.
Restrooms, Lockers, Showers	210 SM (2260 sf)	Size contaminated and clean locker areas for lockers for 25 women and 80 men, up to 12 and 36 at any one time. Provide toilets, sinks and showers, size per codes occupant count. Provide clean and contaminated locker areas. No toilet facilities shall be in contaminated locker area. Provide air shower between clean and contaminated locker areas and/or toilet area. Toilets shall be accessible from the clean areas (Administrative, Issue Room/Pharmacy, Break Area, etc.) without going through a contaminated area.

Space Type	Area SM (sf)	Remarks
Total Maximum	9850 SM (106,025 sf)	

4.2.4 Facility Area Description

The Design-Build offers are encouraged to consider innovative building configurations to accomplish performance requirements, i.e., a “high-tail, low-wing” hangar bay, the use of an exposed exterior structural system with metal panels on interior side to reduce area, etc.

*(6)
Support areas including: production, building and special support shall be classified as uninhabited as per the United Facilities Criteria (UFC) “DoD Minimum Antiterrorism Standards for Buildings” UFC 4-010-01, dated 31 July 2002.

4.2.4.1 Hangar Floor

(a) Hangar Floor Area: The hangar floor area shall be large enough for the C-5 with 6.096M (20’-0”) clearance needed around the aircraft for the DMSS system. The following aircraft are to be stripped in this dock; C-5, C-17, KC-135, and C-130. The hangar shall have a suspended pre-finished metal panel (steel) ceiling system and shall have draft curtains and zoned for fire protection as required by ETL 02-15. It is a preference that the walls up to ceiling height shall have a semi-flat/smooth standard metal (steel) interior liner panels furred out from structure to prevent dust accumulation. The floor of the dock area shall have a mineral aggregate floor hardener type finish. See Structural Design Criteria Section 5.0 for concrete slab requirements.

(b) The hangar floor will be equipped with electrically operated sliding hangar doors that can be manually rolled open during loss of power complying with AFOSH Std. 91-100 & 91-501. An electrically powered, roll-up service door will be required for aircraft tow vehicles to exit the hangar floor without the tug passing under any portion of the aircraft and parts movement. Emergency egress exits shall be as required by codes.

(c) Hangar Floor Special Requirements: A fall protection system shall be provided over the aircraft wings, centerline of fuselage and over the horizontal stabilizer at the tail.

*8

Fall arrest system shall consist of six lines per wing, six lines for the fuselage, and one line per horizontal stabilizer. Lines over the wings shall be configured in a splayed pattern to provide maximum coverage. Each line shall have two retractable fall arrest devices. ~~Fall restraint protection shall be provided at the teleplatforms.~~

~~Teleplatforms shall be installed in the hangar area to access the fuselage and horziontal stabilizer areas for the C-5 aircraft. See Section 6.2.3 for teleplatform configuration requirements. Teleplatform systems shall consist of two overhead platforms that cover the rear portion of the fuselage and two overhead platforms for access to the T-tail and empennage section of the aircraft. Teleplatforms shall be equipped with a fall restraint system. Teleplatform systems and fall arrest system shall not interfere with each other.~~

For “tail-in” alternative configuration, provide a permanent tail stand

system with retractable access platforms to access the aircraft vertical and horizontal stabilizer. Tail stand shall be equipped with a fall restraint system. Tail stand clearances from aircraft to structure/retracted platform, etc. are 1219 mm (4’-0”). For tail stand, clearances from aircraft to structure/retracted platform, etc. are 1.3M (4’-0”) horizontally and vertically (unjacked height). The tail stand shall reach the forward point of the vertical empennage. The process intended is:

- Retract all platforms and tow aircraft into dock
- Lower platform to floor level
- Enter platform
- Elevate platform to any point form 1.3m(4’) beneath horizontal
- Stabilizer to bottom of fuselage.
- Extend platform to aircraft
- Strip aircraft while operator lowers platform as work progresses to keep stripping paint at a comfortable working height
- Secondly, provide either a work platform that can enclose around entire top of the horizontal stabilizer or provide access to the fall protection line.

A bridge crane of sufficient capacity shall be installed over the T-tail section of the C-5 aircraft for removal of the horizontal stabilizer. Bridge crane and fall arrest systems shall be compatible and not conflict with each other.

Aircraft jacks shall be provided. Provide six 54,432-kg (60 ton) capacity steel constructed C-5 aircraft adjustable aircraft jacks conforming to Air Force standards (NSN 1730-01-060-9575). Provide level slab at jack locations.

Trench grating shall be designed for aircraft wheel loads.

The hangar floor shall have emergency shower/eyewashes as required by codes. Emergency Eyewash/Showers shall be located per AFOSH Std. 91-100.

*8 Hangar dock shall have pre-finished smooth metal ceiling system suspended from structure. Future teleplatforms, fall arrest systems, and bridge cranes shall be below the metal ceiling. Ceiling height shall be as determined for necessary clearance from aircraft surfaces to bottom of teleplatform, fall arrest systems, and bridge crane support structure.

Provide catwalks as required, with stair from hangar floor, to access and maintain lights. Provide access system to maintain/replace lights. Access system must meet 01010-6.1.1. Type of access depends on whether or not the lights are in the dock or outside the dock.

4.2.4.2 Administrative Space

The administrative area shall consist of seven private offices with space for five first line supervisors (WS-9), one second line supervisor (WS-12), one technical order office, conference room for 12 to 15 people, and a space for fax/copier, etc. The user will provide furniture with separate funds at a later time. This area will need general outlets and power for personal computers. All offices and conference room will require connection to computer local area network. Provide four connections (including power and space for tables/chairs) in the T.O. Office or in break room to support DMAPS computers. All areas will require telephone outlets. This space shall have painted gypsum board walls, suspended acoustical ceiling with sound attenuation insulation (per 6.5.11) over. Flooring shall be carpet with vinyl or rubber base.

There shall be an air shower provided as part of the decontamination process at the transition area between the hangar floor area and the administration space and special support areas including Break Area, Issue Room/Pharmacy, and Restrooms/Lockers/Showers (air shower required between contaminated and clean locker areas).

Air shower shall be a recirculating type air shower with minimum inside dimensions of 915 mm (36 inch) wide, 2946 mm (116 inch) long, 2134 mm (84 inch) high and be suitable for a Class 1, Division 1 hazardous location. Unit shall consist of prefabricated sections and be provided with lighting, air blowers, stub-in for fire protection sprinkler head, single point electrical connection, and all operational controls. Air shower enclosure shall be constructed of cold rolled steel with an interior vinyl coating and exterior painted coating. Manually operated doors (2 each) shall be anodized aluminum, minimum 914 mm x 2134 mm (36″ x 84″), with clear tempered glass panes. Unit shall provide a minimum of 31 m/s (6000 fpm) velocity of continuously filtered air from two sides and top through adjustable supply nozzles. Return air shall be through a raised floor with removable stainless steel grate for cleaning. Air shall be filtered through a combination of prefilters and high efficiency particulate air (HEPA) filters. The prefilter shall be replaceable fiberglass filters. The HEPA filter shall remove 99.97% of all particles of a diameter of 0.3 micron or larger. Provide a factory installed pressure gauge to measure the pressure drop across the prefilter and HEPA filter. Air flow shall be controlled by an adjustable timer, activated when the entrance door is opened and closed. There shall be no interlock to airflow on the doors.

4.2.4.3 Production Support Area

(a) Blast Media Reclaim/Recovery Room: This room shall have the necessary utilities to support dry media stripping operation on WR-ALC projected aircraft depaint workload. This space shall have painted CMU walls to a minimum height of 3658 mm (12′-0″) and gypsum board over steel studs to roof deck above. No ceiling is required. The concrete floor finish will be a clear hardener/sealer. This space requires forklift and truck dock access.

(b) Blast Media Unload/Storage Room: This space shall have painted CMU walls to a minimum height of 3658 mm (12′-0″) and gypsum board over steel studs to roof deck above. No ceiling is required. The concrete floor finish will be a clear hardener/sealer. This space requires forklift and truck dock access.

(c) Equipment Storage: This space shall have painted CMU walls to a minimum height of 3658 mm (12′-0″) and gypsum board over steel studs to roof deck above. No ceiling is required. The concrete floor finish will be a clear hardener/sealer.

(d) Wash Rack Equipment Storage: This space shall have painted CMU walls to a minimum height of 3658 mm (12′-0″) and gypsum board over steel studs to roof deck above. No ceiling is required. The concrete floor finish will be a clear hardener/sealer. This space requires exterior door of sufficient size to accommodate equipment.

(e) Initial Accumulation Point: This space shall be located within the hangar floor and shall be designated by a painted stripe on floor.

(f) PPE Cleaning: This space shall have painted CMU walls to a minimum height of 3658 mm and gypsum board over steel studs to roof deck above. Ceiling shall be suspended gypsum board at 3658 mm (12′-0″) AFF. The concrete floor finish will be a clear hardener/sealer.

(g) Recycle Material Storage: This space shall have painted CMU walls to a minimum height of 3658 mm (12’-0”) and gypsum board over steel studs to roof deck above. No ceiling is required. The concrete floor finish will be a clear hardener/sealer. This space requires forklift and truck dock access.

4.2.4.4 Building Support Area

(a) Mechanical Room: This room contains mechanical equipment including boilers, air compressors, HVAC equipment, etc. This space shall have painted CMU walls to a minimum height of 3658 mm (12’-0”) and gypsum board over steel studs to roof deck above. Provide sound attenuation insulation within gypsum board wall (per 6.5.11). No ceiling is required. The concrete floor finish will be a clear hardener/sealer. A mechanical mezzanine may be used if required. The mechanical room will require forklift and truck access. Mezzanine for mechanical equipment may be utilized if required.

(b) Fire Protection Room: This room contains fire protection equipment. This space shall have painted CMU walls to a minimum height of 3658 mm (12’-0”) and gypsum board over steel studs to roof deck above. No ceiling is required. The concrete floor finish will be a clear hardener/sealer.

(c) Electrical and Communications Room: The facilities electrical and communications equipment are located in these spaces. These spaces shall have painted CMU walls to a minimum height of 3658 mm (12’-0”) and gypsum board over steel studs to roof deck above. No ceiling is required. The concrete floor finish will be a clear hardener/sealer. These rooms shall be separate spaces. Provide conditioned air as required in the Communications Room.

(d) Chiller Room: This room is for the processed cooling option and contains chillers, pumps, etc. This space shall have painted CMU walls to a minimum height of 3658 mm (12’-0”)and gypsum board over steel studs to roof deck above. Provide sound attenuation insulation within gypsum board wall (per 6.5.11). No ceiling is required. The concrete floor finish will be a clear hardener/sealer. A mechanical mezzanine may be used if required. The chiller room will require overhead door for maintenance access.

(e) Boiler Room: This room contains boilers for the humidity system for the base bid (non-process cooling) scenario. For the process cooling option, this room contains boilers, pumps, etc. This space shall have painted CMU walls to a minimum height of 3658 mm (12’-0”) and gypsum board over steel studs to roof deck above. Provide sound attenuation insulation within gypsum board wall (per 6.5.11). No ceiling is required. The concrete floor finish will be a clear hardener/sealer. A mechanical mezzanine may be used if required. The boiler room will require overhead door of sufficient size for required maintenance access.

4.2.4.5 Special Support

(a) The break area will contain a sink and counter and cabinets. The walls will be painted and the floor shall be vinyl composition or resilient tile. The ceiling shall be suspended acoustical tile at 3048 mm (10’-0”) AFF.

(b) Issue Room/Pharmacy: This space shall have painted gypsum board walls and suspended acoustical ceiling at 3048 mm (10’-0”) AFF., and VCT flooring with rubber base. Provide a counter with shutter for issuing items to

personnel.

(c) The restrooms/lockers/shower rooms should be adjacent to each other. The restroom and shower rooms are to be in the clean area. There shall be a separate locker room in the contaminated and clean areas. Restroom walls shall be moisture-resistant gypsum board or CMU. Restroom perimeter walls shall have sound attenuation insulation (per 6.5.11). Ceilings shall be suspended gypsum board at 2743 mm (9’-0”) AFF min. Perimeter walls of the restroom areas shall extend to underside of the deck above. Ceramic tile shall be provided on restroom walls to a wainscot height of 1220 mm (48 inches) minimum. Walls and ceiling shall be painted with appropriate wet area paint system. Floors shall be ceramic or porcelain tile. At a change of floor finish; terminate all ceramic tile floors at door frames with full-width marble thresholds of coordinating color. Janitor closets shall have a ceramic tile wainscot on all walls and ceramic tile floors. Toilet compartments shall be floor mounted and of stainless steel or solid plastic construction with heavy-duty hardware. Wall-mounted urinal screens shall be securely mounted to the wall with toggle bolts through the inner wall blocking at gypsum board walls and CMU walls. Blocking shall be minimum of 51-mm x 203-mm (2” x 8”) dimensional wood, pressure treated to resist fire. The men’s and women’s restrooms shall be ADA compliant. Lavatories shall be as described in mechanical section and as required by codes.

4.2.5 General Architectural Requirements

(a) General architectural requirements shall conform to Robins AFB Base Facility Standards (Appendix M), Robins AFB Architectural Compatibility Standards (Appendix L) and the Savannah District Design Manual for Military Construction.

(b) Permanent maintenance access shall be provided for all elevated mechanical equipment. Access shall be by fixed ladder and platform for equipment 5.8 m (19’-0”) high and lower, stairs and platforms for equipment between 5.8 m (19’-0”) and 9.2 m (30’-0”), and freight elevators for equipment mezzanines higher than 9.2 m (30’-0”). Freight elevator shall be sized for personnel, tools, equipment, etc. Where fixed ladder or stairs are used, a hoist shall be provided to allow transport of equipment and tools to mezzanine or platform level. Provide catwalks for all equipment requiring servicing located above ceilings.

(c) Exterior Wall Construction: Metal siding system shall be a pre-finished metal siding and shall be a factory-insulated panel system or a field-assembled system consisting of metal siding panel and exterior type insulation. Steel panels shall be zinc-coated steel conforming to ASTM A 653, G90 coating designation, aluminum-zinc alloy coated steel conforming to ASTM A 792, AZ 50 or AZ 55 coating, or aluminum-coated steel conforming to ASTM A 463, Type 2, coating designation T2 65. Minimum gauge of pre-finished metal siding shall be 0.70 mm (24-gage) thick for steel. Pre-finished factory-primed sheets shall be either 1-mil-thick polyvinyldene fluoride or silicone-modified polyester. Finish shall have a minimum warrantee of 20 years to resist chalking and fading. Color of metal siding shall conform to Robins AFB Architectural Compatibility Standards. All fasteners shall be corrosion resistant and shall under 20-year warranty of metal siding system.

CMU Cavity Wall shall consist of CMU, dampproofing, insulation, and veneer that is in compliance with Robins AFB Architectural Compatibility Standards.

Vapor barrier shall be installed as required at exterior walls with gypsum board and metal stud interior surface.

(d) Roofing Systems:

- Structural Standing Seam Metal Roofing: See Appendix G – Specific Base Wide Technical Specifications for specification SECTION 07416 - STRUCTURAL STANDING SEAM METAL ROOF SYSTEM.

- The color of the roof shall match Robins Base Architectural Compatibility Standards for permissible colors used on the base. Roof color white or off-white is also acceptable.

- Minimum slope of metal roofs shall be 2:12. Minimum gauge of standing seam metal roofing shall be as indicated in specification SECTION 07416.

- Roof insulation shall have a minimum U-value in accordance with AF ETL 94-4.

- Built-Up Roofs (BURs): BURs shall be avoided whenever possible in all forms of construction of new facilities as stated in Robins AFB Architectural Compatibility Standards.

- Entire exterior system (roof, walls, gutter, flashing, etc.) shall include a 20 year weather-tightness warranty.

(e) Interior Wall Construction:

- Interior wall construction shall be metal stud and gypsum board in the office/administration areas and CMU (concrete masonry unit) walls/partitions in all other areas to 3658 mm (12’-0”) above concrete slab minimum and metal stud/gypsum board from top of CMU to roof deck if required for separation. CMU shall be bull nosed at door jambs and wall corners. Gypsum board shall be 16 mm (5/8-inch) and in wet areas shall be moisture-resistant gypsum board. Walls separating functional areas shall be constructed to have proper fire protection rating. Gypsum board shall be impact resistant where required if exposed to potential abuse. Sound attenuation insulation (per 6.5.11) shall be install in noise sensitive areas; i.e., offices, restrooms, break room, etc.

- Interior wall liner panels in hangar floor area shall be considered as a preference and shall be semi-smooth (standard liner profile) galvanized steel attached to metal framing. Wall liners shall be 0.85 mm (22-gage) thick steel or 1.02 mm (0.04 in) aluminum and extend from floor to suspended interior metal ceiling system above. Panels shall have a factory finish baked enamel finish.

- Interior metal ceiling system shall consist of liner panels in Hangar floor area suspended from structure and shall be smooth/flat, 0.85 mm (22-gage) thick steel. Panels shall be factory pre-finished.

- Sound Attenuation Insulation (per 6.5.11) shall be located in administration, break room, and restroom walls and ceiling.

(f) Door Systems: Exterior and interior doors shall conform to requirements of Robins AFB Base Facility Standards.

- Door Hardware: Door hardware shall be heavy-duty, bright chrome plated. Exterior door closers shall be LCN Super Smoothee with cushion arm stops or equal. All utility exterior doors shall be metal, insulated, flush panel construction with top edges closed flush and sealed against water penetration. All doors in aircraft dock area shall have dust seals. All butts/hinges shall be Stanley FBB212, heavy-duty or approved equal.

- Master Keying and Locks: Robins AFB utilizes the master keying system provided by the BEST Universal Lock Co. Only those cores that are compatible with the BEST master keying system shall be used. Locks shall be supplied with construction cores. Individual locks shall be provided for in all areas except public toilets. Where existing locksets are to be replaced, ensure that the existing cores are turned in to the Base Lock Shop.

- Exterior Doors: All exterior doors shall be insulated metal 1.61 mm (16 gage) factory primed. All egress personnel type exterior doors shall have a vision, safety glass, window with bottom edge 1372 mm (54 in) from finish floor, utility room doors shall be flush type. Exterior utility door frames shall be heavy-duty rated hollow metal with heavy-duty reinforcement at the hardware connections. Entrance doors shall be insulated, tempered safety, full glass and have insulated glass transom lights to provide natural illumination in the hallway or corridor.

- Interior Doors: All interior doors shall be 1.31-mm (18-gage) steel factory primed except office and conference room doors which shall be 44 mm (1-3/4″) solid core, stainable wood veneer.

- Door Frames: Interior door frames shall be hollow metal construction with corners mitered, welded and ground smooth with factory-installed door silencers. Provide satin stainless steel finish for all hardware throughout the project. Door frames shall be prepared to receive sets of Stanley FBB212 pivot reinforced type hinges featuring head connections to frame and door or approved equal.

- All door frames located in CMU walls (interior and exterior) shall be mortar grouted solid with the appropriate jamb anchors installed for masonry or drywall construction.

- Hangar Doors: Hangar doors shall be electrically powered sliding-type steel framed doors or sliding plenum-type steel framed doors. Hangar doors shall be of sufficient size to allow a C-5 aircraft with minimum 3048-mm (10′-0″) clearance at wing tips to enter the hangar floor area. Doors shall be operable up to a wind speed of 22 m/s (50 mph). The hangar doors shall run on steel rails as required, set in a minimum 28 Mpa (4000 psi) concrete bed with aggregate no larger than 9.525 mm (3/8-inch). Wheels shall be a minimum of 305 mm (12 inch) in diameter and designed to adequately carry the door loads. Wheels shall be fabricated of carbon steel plate. All doors shall begin to move at the same time once the push button has been engaged. Hangar doors shall be operated from both interior and exterior side of the aircraft dock with the exterior operating device being weatherproof and secure. Doors shall provide a manual override of the electrical door contact. Doors shall be fully insulated with U-value in accordance with AF ETL 94-4. The exterior surface shall be pre-finished metal siding. Provide catwalk access system above hangar doors to access mechanical equipment, wherever routine maintenance will occur (IAW 29 CFR 1910.30 and AFOSH Std. 91-501), and if

applicable or required. Hangar doors that are to be used as air supply or exhaust plenums shall have, on the interior hangar side, airflow balancing devices and 0.85 mm (22-gage) flat/smooth interior wall liner closure panels at non-airflow areas. Doors when in the closed position shall have appropriate seals to accommodate the air supply and exhaust requirements and to prevent outside air infiltration (dust contaminates, etc.).

- Service Doors: Exterior overhead service doors shall be 1.31 mm (18 gage) insulated factory primed and designed to withstand design windloads. Interior overhead service doors shall be 1.0 mm (20-gage) factory type. All rolling doors shall be power operated.

(f) Insulation: U-values for wall and roof assemblies shall be in accordance with AF ETL 94-4 and per Table 11-4A Building Envelope Component Guidelines in Weather Region 11 per Army TI 800-01.

(g) Windows: Exterior windows, frame and glazing, shall conform to requirements of the Unified Facilities Criteria (UFC) DoD Minimum Antiterrorism Standards For Buildings. Exterior glazing shall be insulated with interior pane conforming to DoD Standards and the exterior pane being low-E tinted.

- Interior windows, frame and glazing, shall conform to appropriate code requirements.

(h) Signage: Exterior and interior signage shall conform to requirements of Robins AFB Base Facility Standards and Robins AFB Architectural Compatibility Standards. Signage includes all safety signs applicable to the installed systems; e.g. noise, chemical, notice, caution, warning, etc.

4.2.6 Architectural Finishes

(a) Exterior Architectural Finishes: Refer to the Base Architectural Compatibility Standards for in-depth discussions of architectural districts on base and examples of approved base color schemes, and other pertinent topics. All selections of exterior schemes shall be approved by the Robins AFB Base Architectural Compatibility Officer in 778 CES/CECE.

(b) Interior Architectural Finishes:

- Paints shall be cleanable type and meet or exceed the latest issue of SSPC (Society for Protective Coatings) Paint Systems and Specifications. Paints shall be compatible with use of room if chemicals are stored, issued, or used.

- Acoustical ceilings shall be provided where indicated in the Space Criteria sheets in Appendix C. Units shall be mineral fiber with a min. NRC rating of 0.55. Ceiling grid shall be intermediate-duty and have baked-on enamel finish.

- Vinyl composition tile (VCT) shall be provided where indicated in the Space Criteria sheets in the Appendix C. VCT shall conform to ASTM F 1066, Class 2 (through pattern tile, Composition 1), asbestos-free and shall be nominal 3.2 mm (1/8-inch) thick.

- Resilient base shall be rubber and shall be provided where indicated in the Space Criteria sheets in the Appendix C. Provide straight

style units at carpet and coved units at VCT. Corners shall be pre-molded.

- Carpet shall be provided where indicated in the Space Criteria sheets in Appendix C. Carpet shall be level or multilevel loop, solution dyed nylon. Minimum weight shall be 950 grams/square meter (40 oz/yard).

- Chairrail, mildew resistant type II or type III vinyl wall covering, and other finish items shall be provided in the conference room.

- Ceramic floor tile, wall tile and base tile shall be provided as indicated in the Space Criteria sheets in the Appendix C. Tile shall be installed in accordance with Tile Council of America (TSA) guidelines. Floor tile shall be unglazed and slip resistant. Wall tile shall be glazed. Ceramic tile floors in toilet, shower and locker areas shall slope to drain.

- Hangar floor slabs shall have a pre-mixed, scientifically-graded, 98% pure silica aggregate dry-shake hardener incorporated into the concrete floor slab at 5.8 kg/square meter (1.2 lb/sf) coverage such that it forms an integral, monolithically-constructed surface to the concrete and achieves a hardness of 7 Mohs and an average rate of absorption of 0.24 gms/min. ACI 302 recommended practices shall be followed for the surface preparation of the concrete slab prior to installation of manufacturer’s recommendations using the two-application process, the first shake distributing approximately two-thirds of the total specified hardener and the second shake distributing the remaining one-third. The concrete slab shall have a moisture content that does not exceed manufacturer’s recommendations. The colorless, penetrating, water-based siliconate solution designed to seal, dust-proof and harden the concrete surface shall be applied at the coverage rate recommended by the manufacturer for the hangar floor surface finish. Four test panels, each 1219 mm by 2438 mm (4’ x 8’) minimum, shall be constructed prior to slab placement. Each test panel shall receive one of the following non-slip finishes: (1) flat steel trowel finish; (2) slight swirl finish; (3) slight textured finish; (4) light broom finish. Surface treatment (final slab finish) will be selected by the Base.

- Toilet and locker room accessories shall be provided in the restroom areas. All accessories shall have a No. 4 brushed stainless steel finish as minimum. The following toilet accessories shall be provided as a minimum:

  - ADAAG-compliant grab bars in accessible showers and toilet areas.
  - ADAAG-compliant drop-down seat in accessible shower.
  - Mirrors: One per sink.
  - Paper towel dispenser/waste receptacle.
  - Surface-Mounted Soap Dispenser: One per sink.
  - Shower Curtains and Curtain Rod: One per shower.
  - Wall-Mounted Soap Dispenser: One per shower.
  - Clothes Hooks: One per shower and one per toilet stall.
  - Double-Roll Toilet Tissue Dispenser: One per toilet stall.
  - Sanitary Napkin Disposal: One per women’s toilet stall.

Lockers shall be provided as indicated in the Space Criteria sheets in the Appendix C. Lockers shall be metal with baked-enamel finish, integral base, sloping top 300 mm x 457 mm x 1823 mm (12” x 18” x 72”) in

height. Each locker shall be equipped with shelf, hooks, and latch for padlock. Lockers shall be placed on 100 mm (4”) high concrete housekeeping pad with ceramic tile base. Provide benches as required. There shall be two lockers for each worker, one each in contaminated locker and one each in clean locker.

- Fire extinguishers shall be provided as required per NFPA 10 – Portable Fire Extinguishers and other applicable codes.

4.2.7 Interior Design Considerations

All interior design proposals shall be IAW the Robins AFB Architectural Compatibility Standards and coordinated and approved by the Robins AFB Base Architectural Compatibility Officer in 778 CES/CECE.

Color boards and other interior design submittals: All color board and other interior design submittals shall be submitted in accordance with Savannah District Design Manual for Military Construction and Interior Design Presentation Format.

4.2.8 Handicap Accessibility

All designs shall comply with the Americans with Disabilities Act (ADA) and Uniform Federal Accessibility Standards (UFAS) requirements. In cases of conflict, the more restrictive shall apply. The policy is to use the military exclusion as minimally as possible because of potential changes in facility use and occupancy.

4.2.9 Sustainable Design

The Contractor shall develop drawings and specifications with an emphasis on environmentally sensitive materials, recycling, and sustainable design and construction principles. Environmentally responsible design considerations are discussed in the Air Force Environmentally Responsible Facilities Guide. The Contractor shall emphasize, to maximum extent possible and practicable, the design shall incorporate recycled content materials as mandated by EPA’s Comprehensive Procurement Guide (CPG) and ETL00-1. Non-availability of materials or technologies, lack of competition, failure to performance standards, and unreasonable price are all valid reasons for exclusion of CPG items. Note that in addition to fulfilling the CPG requirements, Contractor should explore other construction alternatives in the Environmentally Responsible Facilities Guide, as well as other aspects of “green” design and construction currently practiced in the industry not mandated by EPA or the Air Force. The ultimate goal is to increase sustainability in construction while applying common sense to the decision-making process. The U.S. Green Building Council’s Leadership in Energy and Environmental Design (LEED) Green Building Rating System Version 2.0 shall be used as an outline of environmental performance targets for this project. Proposer shall submit LEED score for the project and provide details as to how they will achieve that score. It is desired to achieve a score of 18 points or higher.

4.2.10 Landscaping

Landscaping shall be in accordance with the Robins AFB Base Facility Standard, Robins AFB Base Architectural Compatibility Standard, Robins AFB Base Land Management Plan and Unified Facilities Criteria (UFC) DoD Minimum Antiterrorism Standards for Buildings.

The hardwood trees and pines on the site shall be incorporated in the design, retained and protected during construction to the extent possible. The trees within the site for the hangar that must be demolished must be replaced with a

similar species of tree having a minimum trunk size of 100 mm (4 inch) caliper diameter. Trees displaced by the parking facility shall be replaced at ratio of one replacement tree for every four displaced trees. All replacement trees shall be IAW base standards. Native planting is strongly encouraged. Avoid using grassed areas as much as possible. Landscaping shall be as low maintenance as possible. If fertilizers or pesticides are used they shall be organic.

5.0 STRUCTURAL DESIGN CRITERIA

5.1 SUMMARY

This section contains the structural design criteria for the Depot Corrosion Control Depaint Facility.

5.2 STRUCTURAL SYSTEMS

The structural framing systems to be designed and constructed as part of this project include, but are not limited to the following:

5.2.1 Foundation System

(a) Foundations shall be reinforced concrete spread footings, grade beams, combined footings or other as recommended by the site-specific geotechnical report prepared by the Contractor’s consulting geotechnical engineer and/or as specified in these specifications. Ground floor slabs shall be slab-on-grade .

(b) Building foundations shall be coordinated to allow for new paint hangar foundations. Foundations shall be designed to allow for adjacent paint hangar building loads and structure.

5.2.2 Depaint Building

(a) The building framework shall be custom designed structural steel. Pre-engineered metal building components such as bar joists may be considered for structural elements . The most economical structural system of steel, concrete and/or load-bearing masonry shall be utilized for building superstructures.

(b) The structure shall be designed to be freestanding, self-supporting and stable after the building is fully completed. It is the designer’s responsibility to consider all applied loads and serviceability requirements throughout the construction procedure and erection sequence, in addition to the service life of the building.

(c) Load-bearing and nonload-bearing walls consisting of steel-reinforced concrete masonry walls and/or cold-formed steel stud walls.

(d) Vertical framing members consisting of structural steel columns, wall girts, and cold-formed wall siding (where applicable).

(e) Horizontal framing members including roof and wall lintel systems. Roof systems may include structural steel beams, open-web steel joists, roof trusses and cold-formed steel roof deck. A structural metal deck may be provided at the roof to distribute lateral loads. Wall lintels shall be constructed of structural steel, reinforced masonry or cast-in-place steel-reinforced concrete.

(f) Mezzanine equipment support levels shall be minimum 100 mm (4-inch) thick normal-weight concrete over form deck over framing steel support members.

(g) Lateral bracing systems including the combination of horizontal and vertical framing systems shall provide structural integrity to transmit all vertical and lateral loading to the foundation in redundant load paths.

(h) Interconnection details including fastening requirements of horizontal and vertical framing systems, providing redundant, integral, structurally sound load paths from each elevated framing system to the foundation. Special consideration shall be used in the design connections of all horizontal and vertical framing members acting as diaphragms and part of the lateral bracing system.

(i) Special conditions such as thermal expansion, lateral drift, machine vibrations, cyclic loading, construction tolerances and control joints are to be considered and accommodated for throughout the design detailing and construction of all framing systems. Each framing system shall be designed and properly coordinated to be integrally compatible with all architectural, mechanical and electrical systems and their corresponding foundations.

(j) Roof: See Architectural Section for standing seam roof and roof slope requirements .

5.2.4 Renovation of Existing Building 44

(a) Provide reinforced concrete foundation slab-on-grade, steel framing, roofing and sidewalks for required building activity.

(b) See Architectural section for space requirements.

5.3 STRUCTURAL DESIGN REQUIREMENTS

5.3.1 General

The following criteria shall be used for loading, design and installation of all structural systems, including fabrication, erection, supervision, testing and quality assurance. The completed structural design shall include all elements for foundations, walls, roof framing and diaphragms. It shall also include lateral load stability analyses as well as support for architectural features, mechanical and electrical equipment. All calculations shall be performed by an engineer registered in the state of Georgia, checked by an engineer other than the design engineer, and shall be in accordance with the guidance provided in the U.S. Army Corps of Engineers, Savannah District "Design Manual for Military Construction." The primary code used for structural design shall be the Unified Facilities Criteria UFC 1-200-01 and those codes referenced therein.

5.3.2 Drawings

Design drawings shall have general structural notes containing design loading criteria, strengths of engineering materials used, design soil values and any other data that would be pertinent to remodeling and/or future additions since design analyses and specifications often become separated from the contract drawings and lost after a project is completed.

5.4 Design Loads

Structural designs shall be in accordance with IBC 2000 (International Building Code) and the applicable industry codes for the particular material involved.

5.4.1 Wind load shall be in accordance with the IBC 2000.

Wind Velocity:	42.5 m/s (95 mph)
Exposure:	C
Category:	II
Importance Factor:	1.15

5.4.1.1 Hangars shall be designed for hangar doors closed at wind speed of 22 m/s (50 mph). Doors shall be designed to be operable up to 22 m/s (50 mph).

5.4.2 Seismic load shall be in accordance with IBC 2000/TI-809-04 (Dec 98).

Spectral Response:

SS: 0.20
S1: 0.10
Seismic Use Group II
Site Class: D

5.4.3 Snow load shall be in accordance with IBC 2000.

5.4.4 Anti-terrorism/Force Protection

Anti-terrorism/force protection systems must be included for this project and shall conform to the United Facilities Criteria (UFC) “DoD Minimum Antiterrorism Standards for Buildings” UFC 4-010-01, dated 31 July 2002.

Manuals are available from U.S. Army Engineer District, Omaha, ATTN: CENWO-ED-ST, 12565 West Center Road, Omaha, NE 68144-3869.

5.4.5 Special Loads

(a) 6810-kg (7.5 ton) crane with trolley hoist supported from roof structure. *8

(b) Eight future teleplatforms (fore, aft, and along each wing) with associated runway track, double girder bridges, trolley hoists supported from roof structure. See Section 6.2.3 for future additional teleplatform design loads for additional process equipment support. *8

(c) 1816 kg (4,000 lb) collateral load for future semi-robotic system. ~~Integrate into teleplatform or support from roof structure adjacent to platform.~~

(d) Safety lanyards (fall arrest system) for crew members working on aircraft supported from roof structure with wing and fuselage coverage. Roof structure supports shall be designed for anchor loads in accordance with ANSI 10.14, OSHA Title 29, Chapter XVII, Part 1910 and 1926 and AFOSH Standard 127-100 .

(e) Slab-on-grade in hangar shall be designed for wheel loads, associated underwing workstand systems, and floor jack loads for C-5, C-17, 767, KC-135, 707 and KC-130 aircraft.

(f) Slab-on-grade in shops and mechanical rooms shall be designed for actual equipment; 2725-kg (6,000 lb) rated forklift and 12.0 kN/m2 (250 psf) live load.

(g) Piping and fire protection thrust loads.

5.4.6 Walls mostly below grade that are supported laterally by diaphragms at or near the top and bottom, shall be designed using loadings based on at rest soil pressures.

5.4.7 Diaphragms shall have continuous chord members on all edges and shall have a direct positive connection for transferring load to all members of the main lateral force resisting system.

5.4.8 Design Criteria

(a) Design Guidance

- Design Manual for Military Construction, Corps of Engineers, Savannah District.
- Design criteria (except as noted otherwise, the more stringent of the following documents shall govern):
  - Unified Facilities Criteria UFC 1-200-01.
- TI 809-02 Structural Design Criteria for Buildings.
- TI 809-04, Seismic Design Criteria for Buildings (only as referenced by UFC 1-200-1).
- TI 809-07, Design of Load Bearing Cold-Formed Steel Systems.
- TI 809-29 Structural Considerations for Metal Roofing.
- TI 809-30, Metal Building Systems.
- TM 5-809-3, Masonry Structural Design for Buildings.
- TM 5-809-12, Concrete Floor Slabs on Grade Subjected to Heavy Loads.

Also see Appendix A for list of references.

5.5 Serviceability

5.5.1 Vertical deflection ratios of suspended horizontal framing members for dead plus live loads shall not be less than:

(a) L/240 at roofs.

(b) L/600 at masonry lintels.

*8
(c) L/600 at roof for ~~teleplatform/~~crane and eight future teleplatforms.

*8
5.5.2 Horizontal deflections caused by seismic or wind loads shall not exceed the limits set forth in the IBC 2000. Building drift must be compatible with diaphragm requirements and walls with brittle finishes, and future teleplatform operations.

5.5.3 Vertical and lateral deflections of hangar door supports shall not exceed operational and serviceability requirements.

5.6 Foundations

5.6.1 The foundation system shall be designed as recommended by the site-specific geotechnical report prepared by the Contractor's consulting geotechnical engineer.

5.6.2 Footings shall be supported on the natural in-situ soils or on properly compacted backfill. Bottom of foundations shall be located a minimum distance below grade as indicated in these specifications.

5.6.3 The exterior of the building below grade shall have extruded polystyrene perimeter insulation extending down 609.6 mm (24 inch) from the finished exterior grade.

5.6.4 Building foundations shall be coordinated to allow for the new paint hangar foundations. New building foundations shall be designed such that they do not impede or complicate the foundations required for the adjacent paint hangar.

5.7 Concrete Design

5.7.1 Concrete/Reinforcing Material Properties

All concrete work and detailing, fabrication and placing of reinforcing shall be in accordance with the latest editions of ACI 301 Specifications for Structural Concrete for Buildings, and ACI 318 Building Code Requirements for Structural Concrete.

- All concrete unless noted otherwise Fc=21 Mpa (3000 psi) Minimum
- Slab-on-Grade Flexural Strength 4.5 Mpa (650 psi)
- Reinforcing ASTM A615M or ASTM A706M, Grade 400
- Welded Wire Fabric ASTM A185

5.7.2 Concrete Materials

(a) Cement: ASTM C 150, Type I-II Portland cement.

(b) Fly Ash: ASTM C 618, Class "F".

(c) Ground Granulated Blast-Furnace Slag: ASTM C 989, Grade 120.

(d) Fine Aggregate: ASTM C 33.

(e) Coarse Aggregate: ASTM C 33.

(f) Air-Entraining Admixture: ASTM C 260.

(g) Accelerating, retarding and water-reducing admixtures: ASTM C 494.

(h) Flowing Concrete Admixture: ASTM C 1017, Type 1 or 2.

(i) Calcium chloride shall not be permitted.

5.7.3 Slabs

5.7.3.1 All slab-on-grade floors shall be isolated and free floating.

5.7.3.2 See Section 5.3.5 for slab-on-grade loading.

5.7.3.3 Slabs-on-grade shall be a minimum thickness of 125 mm (5-inch) and reinforced with welded wire fabric or reinforcing steel bars. “Mud slabs” in crawl spaces do not have to be reinforced and shall be 50 mm (2-inch) thick minimum.

5.7.3.4 Slabs shall be placed in lane fashion. Area of sections bounded by crack control joints shall not exceed 55.8 square meters (600 sf), and distance between crack control joints shall not exceed 7.6 m (25 ft). Joints should define a square area as much as practical.

5.7.3.5 Floor slabs shall be detailed in accordance with TM 5-809-12. Construction, contraction, and control joints shall be spaced to control cracking. Slab shall be finished and slab joints sawed before shrinkage cracks can occur. Curing should be started as soon as possible. Joint sealants shall be compatible with building operations. Slab surface treatment shall be demonstrated to be resistant to stripping media reclaim operations. Structural integrity of the hangar slab-on-grade is critical to facility operations. Particular care should be given to structural detailing and construction procedures. Where concrete does not meet slump, air, or placement requirements, corrective actions will be required by the COTR. Corrective measures may include mix adjustment, equipment changes, procedural changes or slab replacement. For slab surface treatment see Section 4.2.6.

5.7.3.6 Vapor Barrier

Provide vapor barrier under all interior floor slabs. Polyethylene sheet shall not be less than 0.15 mm (6 mils) thick. Provide a capillary water barrier under the vapor barrier.

5.7.3.7 Crack control joints shall be as shown in the Savannah District “Design Manual for Military Construction”, Chapter A-2, Exhibit A-2-15. Reinforcement when required will be interrupted (50 mm (2 inch) clear each side) at sawed or pre-placed crack control joints. Bars shall be mid-depth, and starting 50 mm (2 inches) from edge of slab. The ends of crack control and corners of isolation joints will meet at a common point so far as practical. Floor slab isolation joint shall be 5-mm (0.2 inch) felt. Re-entrant corners shall be reinforced with a minimum of one #13 minimum diagonal bar.

5.7.3.8 Vertical and horizontal runs of conduits and pipes in slabs shall conform to ACI 318. Elevated slabs shall additionally meet the ratings of UL floor assemblies where required. Aluminum conduit and pipes will not be embedded in any concrete.

5.7.3.9 Expansion Joints

Stop reinforcing at joint and provide smooth slip dowels across joint. Provide a bond breaker isolation joint where all concrete slabs abut a vertical surface (foundation walls and columns).

5.7.3.10 Where thickened slabs are employed under column bases or partitions, crack control joints shall be offset from the thickened areas.

5.8 Masonry Design

5.8.1 Concrete Masonry Materials

All design, manufacture and construction of masonry shall be in accordance with the latest edition of TM 5-809-3 Masonry Structural Design for Buildings, and ACI 530 Building Code Requirements for Masonry Structures.

5.8.2 Concrete masonry units shall have a minimum compressive strength of 14 Mpa (2000 psi) on gross area and 7 MPA (1000 psi) on net area at 28 days. Concrete masonry assemblies/prisms shall have a minimum compressive strength of 10.5 Mpa (1500 psi).

(a) Hollow Concrete Masonry Units: ASTM C90, Grade N, Type I or II.

(b) Mortar for Masonry: ASTM C 270, Type S.

(c) Grout for Masonry: ASTM C 476.

(d) Horizontal Joint Reinforcement: 9-gage deformed wire, ladder-type.

5.8.3 Provide solid brick where cores in cored brick might be exposed.

5.8.4 Joints shall be 10 mm (3/8-inch), tooled concave.

5.8.7 Masonry walls shall have vertical control joints as follows:

(a) Exterior and interior walls, 7.3 m (24’-0”) maximum.

(b) At changes in wall height or thickness.

(c) Near wall intersections.

(d) At points of stress concentration.

(e) At control joints in foundation walls and in floors that support masonry walls.

(f) At other locations where cracks are likely to occur.

5.9 Structural Steel Design

5.9.1 All design, fabrication and erection of structural steel shall be in accordance with the latest edition of the AISC Manual of Steel Construction.

5.9.2 Steel Material Properties

W Shapes	ASTM A992, Fy=345 MPa (50 ksi)
Shapes and Plates	ASTM A36, Fy=250 MPa (36 ksi)
HSS Shapes	ASTM A500, Grade B, Fy=317 MPa (46 ksi)
High-Strength Bolts	ASTM A325, ASTM A490
Anchor Bolts	ASTM F1554, ASTM A449
Welding Electrodes	AWS A5.1/5.5 E60XX,E70XX
Paint	Shop primed. Finish coat shall be compatible with facility operations.

5.9.3 Detailing of structural steel framing, including connections, shall be complete. All weld types, bolting layouts, bolt sizes, connection plates,

member sizes and locations and stiffener plate sizes and locations shall be shown.

5.9.4 All members, elements and connections that are a part of the main vertical and/or lateral force resisting system must be completely detailed.

5.9.5 All connections other than standard AISC pre-designed shear connections shall be designed by the engineer of record and detailed on the drawings.

5.9.6 If braced frames are used for all or part of the main lateral force resisting system, the stability of structural system shall not depend on any single member or connection. Redundancy shall be provided either by using multiple bays of tension only x-bracing or by using bracing members that are capable of both tension and compression if bracing is placed in a single bay.

5.9.7 All welding shall be done in accordance with latest AWS D1.1 Structural Welding Code.

5.9.8 Provide 12-mm-(1/2-inch) diameter minimum holes in horizontal member elements to promote moisture drainage.

5.10 Steel Joist Design

Design, manufacture and erection of steel joists and joist girders shall be in accordance with the latest revision of SJI Standard Specifications for Open Web Steel Joists, K-Series, and SJI Recommended Code of Standard of Practice for Steel Joists and Joist Girders.

5.10.1 Joists shall be anchored to steel supports by field welding. Provide erection bolts as recommended by SJI. Provide embedded steel bearing plates in concrete and masonry work. Where top chords are extended provide required section modulus of extensions on the drawings.

5.10.2 Provide special joist seats for sloped roof as required. Modifications or adjustments to joist seats made to accommodate supplier’s fabrication process shall be coordinated with affected trades.

5.10.3 Provide bridging, uplift bridging and cross bridging at bottom chords of joist per SJI recommendations.

5.10.4 Design joists for additional gravity loads and uplift loads as required by analysis.

5.10.5 Provide additional web members at concentrated loads indicated, which do not occur at a panel point. Joists shall support vertical loads less than 136 kg on the top or bottom chord between panel points without reinforcing. Do not support loads from bridging.

5.11 Steel Decking Design

Design, manufacture and erection of metal deck shall be in accordance with the latest revisions of SDI Design Manual For Composite Decks, Form Decks and Roof Decks, and SDI Diaphragm Design Manual.

5.11.1 Form deck shall be galvanized. Metal form material shall be minimum 0.38-mm (28 gage).

5.11.2 Steel roof deck material shall be galvanized and be 0.75-mm (22 gage) minimum. A structural steel roof deck shall be provided under all nonstructural metal roofs. If SSMR will be attached directly to steel roof deck, then minimum thickness shall be 1.5 mm (16 gage) (structural SSMR only.)

5.11.3 Galvanized steel roof deck in areas without ceilings which are exposed to view and are scheduled to be finish painted shall be specified to receive a factory primer coat on the underneath side of deck.

5.12 Cold Formed Steel Design

Design, manufacture, fabrication and assembly of cold-formed steel framing shall be in accordance with the latest revision of Design of Cold-formed Load-bearing Steel Systems And Masonry Veneer/Steel Stud Walls, AISI Specification For the Design of Cold-Formed Structural Members, and AWS D1.3 Specification For Welding Sheet Steel in Structures.

5.12.1 Cold Formed Steel Materials

(a) Galvanized Structural Framing Members 1.5 mm (16 gage) and heavier: ASTM A 653, Grade D, 345 MPa (50 ksi).

(b) Galvanized Structural Framing Members 1.21 mm (18 gage) and Lighter: ASTM A 653, Grade B, 250 MPa (36 ksi).

5.12.2 Trusses fabricated from cold-formed steel members shall be designed and the drawings stamped by a registered engineer in the state of Georgia.

5.12.3 Cold-formed steel members, their components, and connection material shall have G60 galvanized coating.

5.12.4 Top chords of cold-formed roof members shall be 1.5 mm (16 gage), minimum, where standing seam roof clips are connected with screws (structural SSMR only).

5.13 Wood

5.13.1 Retardant treatment, when required. Recommendations regarding the use of fire-retardant treatment are provided in USDA Wood Handbook and National Protection Handbook. Pressure impregnation is the preferred treatment method.

5.14 Other Materials

5.14.1 There are no restrictions on proposing other materials to be used in the structural systems of this project if their strengths and durability can be substantiated by ASTM or other approved laboratory tests, and they satisfy the requirements of the design codes and criteria specified in this document.

5.14.2 All design, manufacture, fabrication, and assembly of other construction materials to be used in structural framing systems shall conform to the applicable design standards and meet specific industry standards as required for each subject material.

6.0 MECHANICAL TECHNICAL DESIGN CRITERIA

6.1 PROCESS DESCRIPTION

*8

(a) The project consists of the design and construction of a corrosion control facility for the stripping of aircraft. The hangar shall have 1 bay incorporating the most modern paint removal technologies, including environmental controls, for dry stripping of aircraft. Access to aircraft shall be provided via future suspended work platforms (teleplatforms), tail work stands (only if hangar is configured for tail-in aircraft position) and walk up/drive up access at floor level.

(b) Stripping of aircraft utilizing dry media consists of impacting the coating on the aircraft exterior with plastic media (a process similar to sandblasting). Such systems are referred to in this document as Dry Media Stripping Systems (DMSS). Before entering the strip bay the aircraft is washed to remove dirt, oils and grease. Once in the hangar, aircraft is masked and then stripped with the DMSS. Following stripping, blast media and paint solids are swept/vacuumed into the media recovery/recycle system and the aircraft is unmasked, removed from the hangar, and washed off site. As a design basis, the DMSS shall be considered a Type V media blasting system, utilizing currently unclassified, nanocomposite, plastic media manufactured by U.S. Technologies (Product Name “Magic Media”), or equivalent product. Note that a typical dry media blasting and recovery system, designed for Type V media can utilize “Magic Media” or an equivalent product, with relatively minor equipment adjustments (i.e., classifier cut points, etc.). Exhaust streams from DMSS operations shall be filtered to remove particulate matter in compliance with the latest version of Subpart GG of 40 CFR, Part 63.

(c) Dry stripping of large aircraft parts and aircraft subsystems shall also be accomplished in a designated area of the strip bay. This process shall utilize available DMSS blast and media recovery connections in the strip bay. Contractor shall designate the large parts stripping area on the design drawings and locate a minimum of 1 each of the hangar blast and media recovery connections such that they can be used in this area.

6.2 SYSTEMS DESCRIPTION

6.2.1 Strip Bay

(a) The strip bay shall be designed to allow processing of aircraft as large as the C-5, with the minimum clearance zone to stripping equipment. Refer to the Architectural section for clearance requirements. Aircraft to be stripped in the hangar include the C-5, C-17, C130, KC135, 707 and 767. The strip bay area shall be Class II, Division 2, Group G hazard classification, conditioned in accordance with applicable codes and regulations and the requirements of these specifications.

(b) Utility services in the strip bay shall include breathing air, compressed air, and DMSS connections. Utility piping shall be routed exposed.

(c) A minimum of 2 emergency eye wash stations shall be provided along each sidewall of the strip hangar. Contractor shall determine the exact number to meet AFOSH time/distance requirements. Eyewash stations shall be compliant with ANSI Z358.1, Emergency Eyewash and Shower Equipment, an shall be piped to daylight outside.

(d) Hangar floor drainage: The depaint hangar shall not have a floor or trench drain system. The hangar shall have a dry media stripping system and no moisture is anticipated in the hangar.

6.2.2 Wash Rack

A future wash rack will be provided outside on the flight line side of the Depaint hangar. The wash rack is not provided under this contract; however, the wash rack hot water/soap/rinse system is provided to support the future wash rack. Rack will provide adequate means to wash the C-5 aircraft prior to the depainting process to remove dirt, oils, and greases from the aircraft, and after depainting to remove residual blast media.

6.2.2.1 Hot Water/Soap/Rinse Systems

Contractor shall provide a hot water/soap mixing, heating and distribution system, and cold water rinse system, and hose reels for the future wash rack. This system shall have the capacity to simultaneously provide a minimum of 114 L/m (30 gpm), 1035 kPa (150 psig), 65 deg C (150 deg F), hot alkaline soap solution; 65 deg C (150 deg F) hot water; or cold water rinse to each of 4 hose reels. Piping from the wash rack equipment to the hose reel positions (underground piping from the Depaint hangar and hose connection pits located adjacent the wash rack aircraft parking position) is not part of this equipment. Provide pipe flanges for future connection of this underground piping located as close as possible to the future wash rack position. Soap shall be non-emulsifying (MIL-PKF-87937, Type 3). Each hose reel shall be a portable hose reel with water powered automatic retraction and side mounted manual retraction mechanism, and shall contain a minimum of 46 meters (150 ft) of 20 mm (3/4”) industrial hose. A bracket for holding the hose end shall be provided with the hose reels, and each hose reel shall be provided with an isolation valve. Hose reels shall be turned over to the Government. System shall be provided with the ability to be interlocked with the future wash rack drain diversion valve to prohibit operation of water pump or soap pump unless the diversion valve is open to the industrial waste drain.

Contractor shall provide a truck delivery connection and transfer piping to the concentrated soap storage tank. All piping utilized for concentrated soap solution shall be 304 stainless steel. Hot water shall be pretreated utilizing a water softener provided as part of this project. Equipment provided for the hot water/soap system shall include, but is not limited to, the following:

- Concentrated Alkaline Soap (MIL-PKF-87937, Type 3)
  - Storage Tank
    - Concentrated Soap Solution (ambient temperature)
    - External Truck Hookup Fill System
    - Transfer Pump to Hot Alkaline Soap Solution Tank
    - Site Glass Volume Gauge
    - Capacity to allow washing of 4 aircraft, each for a 2 hour duration

- Hot Alkaline Soap Solution (MIL-PKF-87937, Type 3) and Hot Water Rinse (working temperature - 65 deg C (150 deg F)), and Cold Water Rinse
  - Hot Storage Tank (Hot Mixed Solution)
    - Bottom Water Fill with meter
    - Paddle Agitator
    - Natural Gas Heating System
    - Sight Glass Volume Gauge
    - Capacity to provide a 2 hour washing duration
  - 2 Each, Pumps in Parallel (1 Backup)
    - 1035 kPa (150 psig) Min Pressure @ Hose Reel Stations
    - 114 L/m (30 gpm) Minimum @ each Hose Reel Station
  - 4 Portable Hose Reels

Contractor shall provide a full tank of Concentrated Alkaline Soap upon successful completion of hangar testing, adjusting, and balancing.

6.2.2.2 Wash Rack Equipment Building

Soap solution mixing, heating, storage (both concentrated and dilute solutions), water softener, and pumping equipment shall be located in an equipment building located adjacent to the depaint hangar, or in an equipment room within the depaint hangar, near the future wash rack. Building shall be heated and ventilated as required for equipment application. Refer to Architectural Paragraph for additional requirements. Drains from the equipment room shall be piped to the sanitary sewer system. If bid Option

0003 – Paint Hangar is exercised, then drains shall be piped to the industrial waste system.

6.2.3 Teleplatforms
***8**

(a) Deleted~~The strip bay shall be equipped with electrically operated teleplatforms suspended from the ceiling. Teleplatforms shall be in accordance with ANSI B30.11 and ANSI B30.16, and shall be designed to service the C-5 aircraft. If the hangar is configured for a tail-in plane configuration, then 2 teleplatforms are required (one pair aft of the main wing). If the hangar is configured for a nose-in configuration, then 4 teleplatforms are required, with one teleplatform located over each main zone of the aircraft aft of the wing (one pair for area aft of the wing, and one pair for the t-tail area).~~

*8

(b) Structure shall be provided to allow installation of 2 future teleplatforms, located for coverage forward of the main wing, 2 future teleplatforms aft of the main wing, and 2 future teleplatforms located for coverage over ~~the~~ each wing~~s~~.

*8

(c) Deleted~~The t-tail teleplatforms, crane and fall arrest systems are located in the same area and shall be closely coordinated.~~

*8

(d) ~~The teleplatforms shall be utilized for access to the vertical and upper surfaces of the aircraft during masking and stripping activities.~~ Each future teleplatform shall be capable of travel in any direction providing complete coverage of the fuselage~~, to the extent indicated in paragraph (a) above~~. Each teleplatform shall have the capability of fully rotating 360 degrees in either direction. The vertical work envelope for the teleplatform shall extend from approximately 300 mm (12 in) above the strip bay floor to a height of at least 1.0 m (3’-3”) above the fuselage or tail of the aircraft, as applicable.

*8

(e) Each future teleplatform shall have a work platform with a minimum 1360 kg (3,000 lb) eccentric load limit. The platform shall be large enough to accommodate 3 workers plus equipment and an operator. The mast shall be centrally mounted along one side of the work platform. Each work platform shall be equipped with toe boards, safety rails, emergency egress, breathing air connections, emergency eyewash station, soft rubber proximity detectors, soft rubber safety bumpers and 4 anchors for fall restraint safety lanyards. Preference is to provide DMSS connections and compressed air feeds for non-DMSS equipment directly piped to the teleplatforms.

*8

(f) The contractor shall provide for parked locations for these future teleplatforms that are outside the clearance zones identified in 4.2.2(a).~~Cables and hoses on the teleplatforms shall be attached using snap track cable systems. Festooned cable and hose systems are not acceptable. All utilities for the teleplatforms shall be provided from the ceiling down to the platform.~~

*8

(g) Deleted~~Teleplatforms shall be provided with a positive means to prohibit dust and contaminants from entering the drive system, mast, controls, etc., and shall be suitable for use in the hangar hazardous environment~~.

*8

(h) Deleted~~Controls~~

~~(1)Emergency Stop, fixed, wall-mounted~~
~~(2)Key-operated, wall-mounted control functions:~~
~~?Platform – raise, lower~~
~~?Rotate clockwise, counter clockwise~~

~~?Move left, right~~
~~?Move forward, backward~~
~~(3)Emergency Stop, fixed platform-mounted~~
~~(4)Platform versus Wall control selector switch, fixed mounted on the platform~~
~~(5)Portable, platform-mounted functions~~
~~?Platform – raise, lower~~
~~?Rotate clockwise, counter clockwise~~
~~?Move left, right~~
~~?Move forward, backward~~

6.2.4 Tail Work Stands (if Required)

Tail work stands are required if the hangar is configured for a tail-in plane configuration; for nose-in configuration, tail stands are not acceptable unless they can be automatically (i.e. single push button operation) moved to a position to allow towing the aircraft in and out of the hangar. Contractor shall design, manufacture and provide 1 set of tail work stands for the C-5 aircraft. Work stands shall provide complete access to the horizontal stabilizer and empennage of the aircraft. Stands shall be power-operated and move vertically as well as horizontally (may be X-Y or rotational movement) to reach all areas of the empennage and horizontal stabilizer for dry media stripping operations. Work stands shall be equipped with permanently mounted lights, compressed air, breathing air, and DMSS outlets. Work stands shall be equipped with walkways, guard rails and toe boards as required by applicable codes and standards. For tail work stands, clearances to aircraft may be reduced to 1.22 m (4 ft) if four columns are used rather than a cantilevered system. Allow for 3 workers plus operator to work on each side of the aircraft simultaneously. Work platforms shall be capable of moving from the aircraft surfaces to 1.22 m (4 ft) or more away from the aircraft. Structure (columns, primary beams) shall be designed to take an additional vertical load of 3,402 kg (7,500 lb) on each side of the aircraft.

6.2.5 Cranes

(a) The depaint bay shall be equipped with a 6810 kg (7.5 ton) crane suspend from the roof structure to service the T-Tail area. Crane and hoist system shall be in accordance with ANSI B30.11, ANSI B30.16, and CMAA No. 70, and shall be suitable for use in the hangar hazardous environment. The drive system, trolley, and hoist shall be electrically operated. Crane shall provide for the removal and installation of the C-5 horizontal stabilizer.

*8

(b) Controls
(1) Emergency stop, fixed, wall-mounted
(2) Key-operated, wall-mounted control functions
- Bridge – forward, reverse
- Hoist – forward, reverse
- Hoist – raise, lower

~~(3)Controls shall be integrated with teleplatform controls~~
*(6)

(c) Intent is to remove the horizontal stabilizer, rotate it 90 degrees (in the tail pocket, if tail-in), lower it to a dolly (stabilizer is placed on dolly flat) and pull the dolly out of the hangar doors. Stabilizer is removed in a single assembly. Ensure space exists at pinch points to accomplish this. The path of the dolly travel can be below the aircraft wings however, provide 3.05 meters (10 feet) clearance to aircraft engines. The stabilizer is 7.93 meters (26 feet) by 31.04 meters (69 feet). The dolly horizontal plan dimensions are .61 meters (2 feet) larger than the stabilizer in each horizontal direction..

6.2.6 Articulated Arm Lifts (GFGI)

Articulated arm lifts are Government Furnished, Government Installed (GFGI) equipment. This contract shall provide all support utilities for GFGI equipment. Four (4) 19 m (62 ft) articulated arm lifts will be provided, ANSI A92.5 compliant. Lifts will be approved for use in the hangar hazardous environment. Lifts will have minimum capacity for 4 workers plus equipment, 360° continuous turntable rotation, 180° hydraulic-powered platform rotation, self leveling platform, fully proportional controls, and four wheel drive, and task lighting. Contractor shall allocate and mark the parking positions on the floor. Park/recharge areas shall be outside the clearance zones for the aircraft.

6.2.7 Scissor Lifts (GFGI)

Scissor lifts are Government Furnished, Government Installed (GFGI) equipment. This contract shall provide all support utilities for GFGI equipment, including a battery charging area for the scissor lifts. Six (6) 9 m (30 ft) scissor lifts will be provided, ANSI A92.6 compliant. Lifts will be approved for use in the hangar hazardous environment. Lifts will have a minimum lift capacity for 4 workers plus equipment, manual lowering valve, proportional controls for lift and drive functions, emergency stop switches at platform and ground level, non-marking tires, and automatic battery charger with maintenance free batteries, and task lighting. Contractor shall allocate and mark the parking positions on the floor. Park/recharge areas shall be outside the clearance zones for the aircraft.

6.2.8 Forklifts

Provide one forklift, including fueling/recharging/parking station, rated for 1814 kg (4,000 lb), for the depaint facility. Forklift shall have solid pneumatic tires, be propane, battery or diesel powered, and shall contain all the features and components necessary to work functionally and efficiently in the depaint facility.

6.2.9 Fall Arrest System

Nineteen fall arrest systems shall be provided in the strip bay, six over the aircraft fuselage, six over each wing, and one over the t-tail area. Systems shall be spaced evenly across each wing or fuselage to maximize coverage. Each system shall support two workers. Fall arrest systems shall be in accordance with ANSI A10.14 and OSHA Title 29, Chapter XVII, Part 1910 and 1926.

6.2.10 Breathing Air Systems

*8

(a) The strip bay shall be equipped with a Class D breathing air system. The system shall be sized to serve a minimum of 46 personnel simultaneously. The system shall supply and sustain a minimum of 550 kPa (80 psig) at all breathing air drop locations, based on 46 personnel simultaneously utilizing breathing air at those breathing air connections located furthest from the mechanical room. For design purposes, assume a minimum consumption of 560 L/m (20 cfm), per person. Each connection shall include a pressure gauge and adjusting valve. If the system pressure exceeds 860 kPa (125 psig), then pressure reducing valves shall be provided at each connection. The contractor shall provide breathing airdrops along each sidewall of the hangar, above each wing of the C-5 aircraft, above the aircraft fuselage, ~~on each teleplatform,~~ and on the tail work stands (if provided). Provide hose reels at each breathing air drop. Breathing air drops shall be located so workers are dragging no more than 50 m (165 ft) of air hose for any of the following (maximum

length of hose shall be 91 m (300 ft) from point of attachment to the respirator facepiece):

*8

- 12 workers on each wing
- ~~4 workers on each of the teleplatforms simultaneously~~
- 12 workers on the fuselage
- 12 workers on the underside of the fuselage
- 8 workers on tail/empennage

(b) Piping for breathing air systems shall be stainless steel. Breathing air quick disconnects (QD's) shall be industrial interchange 10 mm (3/8 inch), properly labeled, and shall coordinate with Robins AFB standards. QD's shall be not be compatible with any other gas systems in the facility in accordance with 29CFR1910.134 h(4)(i)(8). Visible and audible alarms of breathing air shall be provided in the strip bay, the DMSS Equipment and Control Rooms, in or near the Supervisor's office, and anywhere else breathing air drops are installed. Alarms shall be visible to the respirator users. Provide multiple annunciation devices in the depaint hangar such that users at any point within the hangar can see the alarm with an aircraft in the space. Alarm panel shall be approved by Robins AFB and shall monitor O2 and CO gases and low air pressure alarm (RAFB standard control panel is DYNAMATION ABL 4021-1). A complete Class D Breathing Air system shall be provided.

(c) Provide a minimum of two breathing air compressors (each 60% capacity). Compressors shall be compatible with COMPAIR specified lubricants. Provide a system connection for utilizing a portable air breathing air compressor. Connection shall tie into breathing system upstream of the BA system monitors, shall be accessible to the outside and clearly labeled.

6.2.11 Compressed Air Systems

*8

(a) The strip bay shall be equipped with a compressed air distribution system supplied from the DMSS compressors. Strip bay compressed air outlets shall be spaced along each sidewall of the strip bay, above each wing of the C-5 aircraft, and above the fuselage. Compressed air shall also be plumbed to hose reels ~~for the overhead teleplatforms (if not piped directly to the platforms)and~~ to the tail work stands (if provided) in the strip bay, and to mechanical/equipment rooms as indicated in Appendix C – Functional Room Requirements. Provide hose reels at each compressed air drop. Compressed air drops shall be located so workers are dragging no more than 60 m (200 ft) of air hose for any of the following:

*8

- 12 workers on each wing
- ~~4 workers on each of the teleplatforms simultaneously~~
- 12 workers on the fuselage
- 12 workers on the underside of the fuselage
- 8 workers on tail/empennage

Air outlet spacing and hose length shall allow CA to reach all points on the C-5 aircraft. Hose reels shall be auto reeling, wall-mounted, completely off the floor, to allow cleaning of DMSS media and dust from the floor beneath the reel. Compressed air shall be supplied at a minimum of 620 kPa (90 psig) at the connections.

*(6)

(b) Compressed air is available from the Robins AFB central compressed air system. Compressed air piping is 255 mm (10 inch) PE 3408, SDR 7.3

located in a utility corridor off the edge of the flightline. Plant has 943.8 L/s (2,000 scfm) excess capacity available at 725 kPa (105 psig) flowing pressure, 860 kPa (125 psig) pressure rating. At the Contractor's option, this compressed air can be used for this hangar or the paint hangar. If used, air shall be filtered for oil, water and particulate before being connected with the building compressed air system. Provisions shall be made for system isolation and to ensure building compressed air system will not backfeed the base distribution system.

(c) The Contractor shall provide all compressed air equipment, distribution piping, drops and connections from the DMSS compressors to the strip bay and all connection piping from the DMSS compressors to the shop compressed air system. A minimum of two 50% capacity air compressors and two 50% capacity air dryers shall be provided. Air compressors shall be compatible with COMPAIR specified lubricants. Air receivers shall be painted carbon steel, ASME pressure vessels, rated for the maximum pressure encountered. Compressed air QD's shall be 8 mm (1/4 inch) and shall be coordinated with Robins AFB standards. Confer with the Contracting Officer for Robins AFB standard size/part number for compressed air QD's.

6.2.12 Process Heating, Ventilating, Cooling and Exhaust (PHVCE) System

(a) The strip bay shall be equipped with a variable airflow process heating, ventilating, and exhaust system for the removal of dusts generated by the aircraft stripping operations. As an option, process cooling shall be provided as described herein.

(b) The PHVCE exhaust system shall include filtration as described in the Process Air Purification paragraph.

(c) The PHVCE system may include air recirculation following particulate filtration, as described in the Process Cooling paragraph. High efficient air filtration shall be provided in the recirculated air stream. Filters shall be a minimum of 99.97% efficient at 0.3 micron particle size, for all contaminants in the airstream. System shall allow the amount of recirculated air to be increased from the design value up to 80% recirculated air. This adjustment would be done only once after the initial bio-environmental test, and after that only if there were a significant change in work practices. Provide access points to permit periodic inspection and cleaning of the entire recirculation air duct. Access points shall be located at each change in direction and every 15.3 m (50 ft) of straight duct run. Recirculated air shall be mixed with tempered air from the outside air units to provide supply air to the hangar of adequate temperature and humidity. Recirculation system shall ensure adequate mixing of outside air and recirculated air before entering the supply air plenum.

(d) The PHVCE system shall be designed and controlled to maintain –10 Pa (-.04 in w.c.) pressure in the hangar at all times with respect to outdoors and adjacent areas. System shall provide uniform airflow, parallel to the aircraft axis of flight, across the cross-section of the aircraft plus 3 meters (9.84 ft) ("aircraft zone"), including beneath the fuselage. Supply system shall incorporate means to adequately balance the flow and direction of. Air velocity shall be 30.5 m/min (100 fpm) maximum, 15.3 m/min (50 fpm) minimum, 24.4 m/min (80 fpm) average in the aircraft zone, with a minimum 15.3 m/min (50 fpm) at any point outside the aircraft zone. Depaint system shall be locked out if the PHVCE system is not operating, or operating at partial airflow.

(e) One spare supply and exhaust air handling unit or fan shall be provided to allow full system operation when any one fan is down for maintenance. For variable flow systems, provide variable frequency drives (VFD's) on each fan in the system. Provide sequential control of the PHVCE system to limit electric demand. Pair exhaust and return fans with air handling units to start simultaneously, with each EF/RA/AHU set sequenced for staggered starts.

(f) The PHVCE systems shall be designed in compliance with all applicable codes and guidelines, specifically Aerospace NESHAP's and OSHA. Systems shall be interlocked with the fire alarm system panel, with an alarm free condition as a prerequisite for fan operation. All fans (supply, return, and exhaust) within a fire protection zone shall be de-energized upon receipt of an alarm signal from the fire alarm panel that an alarm condition exists in that zone. Smoke detectors shall be provided in all air handling units that deliver airflow of 944 L/s (2,000 cfm) or greater. Provide an audible and visual alarm in the hangar to indicate inadequate airflow in the PHVCE system.

(g) Heating systems shall be designed to maintain the minimum heating and humidification setpoints and airflow rates as indicated in Table 1 – DePaint Bay Heating and Ventilating Requirements with the doors closed. The strip bay heating systems shall shut down when the main hangar doors are opened. A minimum thermostat setting of 5 deg C (41 deg F) with an adjustable setpoint shall be included in the design to protect piping from freezing when doors are open during subfreezing temperatures. The heating system design shall include the capability to restore the strip bay temperature and humidity to the heating setpoint within 4 hours after bringing in a C-5 aircraft on the coldest design day.

(h) Process Cooling (PC):

(1) As an option, Contractor shall provide process cooling for the strip bay hangar. For this option, the process cooling plant is a combined plant to serve both the paint hangar and the depaint hangar. PC design shall be capable of maintaining both hangar temperatures while supplying the required OA flow on the summer design day (worst case of DB/MCWB or WB/MCDB). Cooling plant shall be sized based on the 2% Occurrence summer design outside air temperatures; air handling unit coils and branch piping shall be sized based on the 1% Occurrence summer design outside air temperatures. System shall be capable of restoring either hangar temperature to the cooling setpoint within 4 hours after bringing in a C-5 aircraft on the summer design day, while providing design cooling for the other hangar.

(2) Conditioned air from the depaint hangar OA units shall be mixed with RA from the hangar to provide SA of the appropriate temperature and humidity to condition the hangar. System shall provide 30% conditioned outside air, 70% return air. In addition to providing units to supply 30% of conditioned outside air, unit(s) shall be provided to allow an additional 10% of filtered outside air (no heating or cooling required) as a back-up to the OA units. Back-up units shall be located to ensure outside air remains evenly mixed with recirculated air. For example, if air handling units are placed on both sides of the hangar, then each side shall have a back-up (filtered outside air) unit.

(3) Process cooling system shall be designed to provide adequate cooling with one hangar operating at 30% OA, the other hangar operating at 20% OA (i.e., 30% OA Paint/20% OA Depaint, or 20% OA

Paint/30% OA Depaint, whichever is less stringent); however, initial operating condition of both hangars will be at 20% OA. Cooling coils may be located in portions of the return air stream if desired to provide adequate hangar cooling at the 20% OA condition. These cooling coils are subject to all accessibility and maintainability requirements described in this document.

(4) Provide a minimum of five equally sized chillers to satisfy the total plant load. Cooling system shall provided adequate cooling on a design day with both hangars operating at 20% OA condition with the largest chiller out of service. The cooling plant shall be provided (by siting, configuration of equipment, pipe headers, etc.) to allow plant expansion to install a redundant/backup chiller in the future.

(5) The heating plant for process cooling shall be provided with a redundant boiler (steam or hot water) to allow full heating capacity with the largest boiler out of service, or by gas heat in the air handling units. Standby boiler and system pumps shall be provided, equal in size to the largest active pump in service. Boiler sizes and pressures shall be in a range that allows an unmanned heating plant in accordance with AFI 32-1068.

(6) Humidification system is required with or without process cooling. Humidification shall be provided for the hangar by direct steam injection or by self generating humidifiers. If steam is used for humidification, system shall operate at 65% (minimum) capacity with the largest steam boiler out of service. Steam system (if used) for humidification shall be completely independent from steam used for process heating.

Table 1 – DePaint Bay Heating and Ventilating Requirements

Mode	**Airflow (m/s)**	**Temperature Heating (Deg C)**	**Cooling (Deg C)**
Depaint Operation	24.4 m/s (80 fpm)	20 deg C (68 deg F), 30% RH min	Ventilate (base bid) 25.5 deg C (78 deg F), no humidity requirement (PC option)
Unoccupied	Intermittent	10 deg C (50 deg F)	Note 1

Note 1: Unoccupied mode shall cycle supply air system (reduced airflow) as required to maintain temperature for freeze protection.

6.2.13 Process Air Purification System

The exhaust system for the depaint hangar shall include a process air purification system consisting of particulate filtration in compliance with 40 CFR, Part 63, Subpart GG. Air filtration shall be a minimum 99.97% efficient at 0.3 micron particle size.

(a) Filtration system dust collectors or cartridge filters shall automatically discharge waste into 'Big Bag' totes. Elevations and access shall be provided for bag disposal by forklift.

(b) If located in a plenum wall, cartridge filter elements shall be accessible from permanent work platforms/catwalks located to provide full access to the filter elements. Include hoists, freight elevators, or other means with the catwalk system to allow raising and lowering the cartridge filters to each level.

6.2.14 Dry Media Stripping Systems (DMSS)

(a) The DMSS shall include compressors, media storage and dispensing systems, pressure pots, hoses, blasting nozzles and media separation, cleaning and recycling equipment, and all appurtenances as required for a complete and operating system. System shall allow for 20 users to simultaneously perform dry stripping operation. System distribution and recovery shall be designed for efficient depainting of the C-5 aircraft, ease of use, ease of maintenance, and cost-effective operation. Requirements indicated below shall be considered minimum requirements, but are not intended to prohibit the Contractor from proposing system enhancements or innovative design solutions, subject to approval.

*8

(b) Contractor shall provide 2 equally sized DMSS systems, one system serving each half of the strip bay. The DMSS system shall be designed to serve 52 operator positions (on each side of the strip bay, over each wing, and on the tail work stands (if provided)) and each of the future teleplatform locations. DMSS outlets shall be located so workers are dragging no more than 60 m (200 ft) of hose to strip any point on the aircraft. System shall be sized to allow 20 operators to use the DMSS simultaneously, 10 from each DMSS system. Equipment to be provided as part of the DMSS system includes, but is not limited to, the following:

20 Each – Media Blast Pots
52 Each - Hoses and Nozzles.
2 Each – Recovery Storage Hoppers (sized by Contractor)
2 Each – Cyclone Media Separators
2 Each – Media Classifiers (2,500 kg/hr (5,500 lb/hr) min. each, flow rate as required to support process)
2 Each – Magnetic Separators
2 Each – Ionized Air Injection Systems
2 Each – High Density Particle Separators
6 Each – Low-profile Vacuum Media Recovery Units
2 Each – In Floor Media Recovery Systems
1 Each – Industrial air compressor system with dryers, receiver tanks, water/moisture separators, coalescent pre-filters, and 3 micron particulate filters
1 Each – Dry Media System Equipment Process Controller (controls both systems)
2 Each – Dry Media Dust Collection System
2 Each – Clean Media Storage Hoppers (41,000 kg (90,000 lb) min. capacity each)
1 Each – 82,000 kg (180,000 lb) lot of "Magic Media" as manufactured by U.S. Technologies

(c) The controls and indicators of the DMSS equipment shall be simple, logical, easy to use and understand. The control panels for the blast systems, recovery and separation equipment shall be installed in a common room.

(d) Connections at the DMSS compressors, distribution piping from DMSS locations to work zones supplied by the DMSS compressed air system, quick disconnects, hoses and reels for DMSS compressed air shall be provided as part of this project.

(e) The DMSS equipment shall be designed to use Type V plastic blast media and to clean the reclaimed media to current USAF T.O. 1-1-8 specifications (www.robins.af.mil/ti/tilta/documents/TechOrd.htm). All media storage, conveying, application, recovery and cleaning systems shall include all hoppers, receivers, air locks, level probes, controls, blowers, fans, motors, motor starters, dust collectors, contactors, timers, controllers, additional electrical equipment and any related equipment necessary for complete operating systems. All equipment supplied as part of the media recovery and cleaning system shall be operated with a single on/off switch. No operator-dependent on/off sequencing shall be acceptable.

(f) Media storage for each system shall include a minimum of 2 hoppers; Recovery, and Clean Media Storage. The Clean Media storage hoppers shall be designed to accommodate 41,000 kg (90,000 lb) of new or recovered/cleaned media each. The Recovery hopper shall be sized to allow uninterrupted media recovery during a C-5 stripping operation. All media storage hoppers shall be completely sealed, except for top-mounted access hatches, which shall be dust-tight. All media storage hoppers shall have sight level glasses visible from ground level such that the operator can visually see the level of media in the hoppers at any time. All media storage hoppers shall have internal air-assisted flow aids to prevent plugging and bridging. Air powered vibrators are not acceptable. All media storage hoppers shall automatically revert to ambient pressure when not in operation.

(g) Full, Re-start and Low Level probes shall be provided in each hopper to start and stop media transfers, prevent overfill conditions and indicate an empty state. High media level probes shall be positioned such that readings are not affected by media flow (i.e., filling operations) and at such a level that they will indicate a full condition at 95% of usable hopper volume. Re-start media probes shall be positioned to indicate when media transfer into the hopper can be resumed without unduly starting and stopping the media conveying systems. The hopper output conveying system rate shall be used to determine this level, based upon a time interval of a minimum of 5 minutes to a maximum of 15 minutes. Low-level media probes shall trigger a local visual alarm, a visual alarm at the DMSS Control Panel and also a shutdown condition for those situations where equipment may be damaged by low or nonexistent media flow. All full and low level probes shall have indicator lights on the control panel located in the DMSS Room.

(h) The low-profile vacuum media recovery systems shall consist of 6 hose-mounted, media recovery vacuum wands. Each media recovery hose shall reach from the sidewall of the strip bay, at 1 m (3’-3”) above floor level, to approximately 5 m (16 ft) over the centerline of the bay. Each of the media wands shall be equipped with an easily moved and operated recovery tool. The media recovery wands shall be designed such that if the entire inlet section is filled with plastic media, blockage of the recovery wand and hose cannot occur.

(i) An automated, pneumatic, in-floor, media recovery system shall be provided. This system shall be flush mounted in the hangar floor. The system shall provide for the automatic recovery of spent media and pneumatic transport of recovered media to the Recovery Hopper(s). Spent media shall enter the in-floor recovery system either by manual sweeping

by operators, or blown in utilizing this feature on the Contractor-supplied, blast nozzles. The Contractor shall size the in-floor media recovery system for simultaneous operation of 20 DMSS positions, such that spent media accumulation does not occur. System arrangement shall be trench locations adjacent to either side of the C-5 fuselage and behind each wing, or an equivalent system. Trench area shall be maximized to minimize manual sweeping required.

(j) The vacuum for the media recovery wands shall be provided by vacuum source(s) that feed the recovered media and dust into the Recovery Hopper. The media recovery capability of each hose shall not be affected by media recovery operations of the other hoses. All exhaust(s) from the vacuum source shall be exhausted to the system dust collector.

(k) The inlet to the Recovery Hopper shall be equipped with a cyclone for removal of fines and undersize particles. The Recovery Hopper shall revert to ambient pressure when the recovery system is inoperative. A manual slide gate valve shall be provided at the outlet of the Recovery Hopper for maintenance of the rotary airlock. The Recovery Hopper shall be equipped with Full, Restart and Low Level probes as described above. The Control Panel in the DMSS Control Room shall have an input for starting and stopping the feeder based on the level probe signals.

(l) Two Media Classifiers, each with a minimum processing capacity of 2,500 kg/hr (5,500 lb/hr) of recovered media, shall be provided for the separation of reusable media from oversize particles and fines. Each classifier shall be a vibratory type, equipped with screens for separating good media (12 to 60 standard mesh) from other materials. All materials not falling into this size classification shall be conveyed to a waste collection system. The vibratory screen shall be provided with any required air locks to assure that there is no air flow or vacuum across the screens that may impact the operational efficiency. Internal ball-type screen cleaners shall be provided with the Media Classifiers. All exhaust from the Media Classifier shall be conveyed to the system dust collector before exhaust.

(m) Two magnetic particle separators shall be provided for separation of magnetic particles from classified media. Each magnetic particle separator shall have a minimum of 2 rows of staggered magnets. A slide gate shall be installed immediately prior to each magnetic separator to facilitate isolation for removal and cleaning. The magnets shall be mounted in an easily removable drawer to allow rapid and easy cleaning of all magnets.

(n) An ionized air injection system shall be provided at the outlet of each magnetic separator to help eliminate the build-up of static electric charges in the media.

(o) Two High Density Particle Separators shall be provided to separate all dense particles from the classified media. The High Density Particle Separator’s performance shall meet the requirements of T.O. 1-1-8. The High Density Particle Separators shall be equipped with manually operated bypasses to allow deletion of this treatment stage from the media recovery/recycling process, while retaining all other separation equipment in operation. When in the bypass mode, the High Density Particle Separation system shall be automatically turned off to prevent unnecessary wear on system components. A High Density Particle Separator bypass indicator shall be provided both locally at the separator and remotely at the DMSS Control Panel. All exhaust and dust generated by the Heavy Particle Separators shall be sent to the system dust collector.

An accessible collection and disposal system for heavy contaminants shall be provided. The High Density Particle Separator shall be provided with a site glass.

(p) The DMSS compressors shall be designed to provide sufficient compressed air to serve 20 positions and the strip bay compressed air needs defined in this specification.

(q) Media blast equipment systems shall be provided, including piping to 52 hoses and nozzles, blast pots and all associated controls, operating and safety equipment. Blast pots may serve multiple nozzles. Configuration of the nozzle piping and blast pots shall take into consideration the number of operators and their relative positions during stripping the aircraft, such that the system is designed to function with the operators work sequence while still maintaining a system diversity of 20 simultaneous users/52 nozzle locations. The blast systems shall be equipped with power pop up sealing valves that operate from the supply line pressure, independent of pot pressure. To assure that no air pressure is discharged into the media storage hopper, the pot blow down sequence shall be interlocked and timed such that the power pop up valves cannot open until all internal pot air pressure has been discharged out the normal pot blow down pipes (i.e., pop up valves shall not open while there is any internal, above ambient, pot pressure). Any pot blow down or control air pressure exhausts from the system shall be provided with mufflers. If a potential for media leakage from any exhaust exists, the air lines shall be routed to the system dust collector such that no media, or fines/dusts are released into the hangar environment during blowdown or other normal blast pot operations. The blast pots shall be equipped with all necessary controls for operation of the blast systems. This shall include all blast and control line hoses, dead mans, pilot operated remote control air pressure system regulators, remotely controlled media flow control valves and 12.5-mm (1/2 in) diameter, long venturi blast nozzles. Media flow control and blast air pressure shall be remotely controlled from the DMSS Control panel and shall not be adjustable by the operator at the blast nozzle, or blast pot. Remote, adjustable, air pressure controls and media flow controls, with blast air on/off switches and digital pressure readouts shall be provided. Operator controls shall include a media cutoff switch to facilitate blast air being used for blowdown. Blast nozzles shall each be equipped with on/off and electric deadman switches. Each blast connection shall be provided with quick disconnects for both the blast hose and deadman control lines. Connections to each individual pot shall be grouped together and clearly marked with non-removable stamped metal labels listing the individual blast pot number. Blast hose and deadman control line connections shall be located 1 meter (3’-3” ft) above floor level. Each blast hose and associated deadline control line shall be a minimum of 30 meters (100 ft) long. Spacing of outlets and hose length shall be as required to efficiently reach all surfaces of the aircraft while optimizing hose length. Blast hoses shall be minimum 11 mm (7/16”) wall, braid reinforced, static dissipating, black rubber with externally mounted quick disconnect couplings with automatically interlocking deadman control wire connections. Last 15.2 m (50 ft) of blast hose shall be whip hose with a wall thickness of 7.9 mm (5/16”). Hose selection shall provide a balance between long life under heavy duty, and ergonomic user operation. Blast piping system shall be designed for a 15-year life.

(r) Two system dust collectors, one for each independent DMSS system, shall be provided to collect all waste dust, exhaust air and venting for all equipment associated with DMSS operation, including media recovery, transport, cleaning and blast equipment operation (other than actual

blasting nozzle operation). The dust collector shall be a cartridge filter, automatic reverse pulse jet unit designed and built for continuous duty operation. Dust collectors shall automatically discharge waste into 'Big Bag' totes. Elevations and access shall be provided for bag disposal by forklift. Cartridge filter elements shall be accessed from fixed work platforms/catwalks located to provide full access to the filter elements by personnel. Externally mounted differential pressure gauges, clearly visible from the floor, shall be provided to monitor the pressure drop across each filter bank during operation. The cartridge-type filters shall be pleated, paper filters with a minimum filtration efficiency of 99.97% at 0.3-micron particle size. All ventilation and/or conveying air exhausted from the system shall be provided with filtration prior to exhaust to meet all applicable environmental regulations and provide for operator safety.

6.2.15 Building 44

(a) Provide HVAC and plumbing systems for the new and renovated portions of Building 44. Modify the air supply and return system in the existing break room as required to support the remodeled space. Install new split system heat pumps with supplemental electric heating for the break room addition, locker/restroom addition, and the new office space located in the existing hangar. Locker/restroom addition shall be provided with an exhaust system.

(b) Install plumbing fixtures, floor drains, and water heater for the new locker/restroom addition.

6.3 GENERAL MECHANICAL REQUIREMENTS

Registered professional engineering services shall be required for mechanical design and specifications preparation for this construction contract. Refer to the Designer of Record requirements in SECTION 01012.

6.3.1 Material and Equipment

All materials and equipment shall be new and free from defects. Materials and equipment shall be proven to be satisfactory in commercial or industrial use for 2 years prior to the bid opening. The 2-year use shall include applications of equipment and materials under similar circumstances and of similar size. The product shall have been for sale on the commercial market through advertisements, manufacturer's catalogs, or brochures during the 2-year period. All materials in the same category shall be the product of a single manufacturer (i.e., fans, gate valves, globe valves, sprinkler heads, etc.). All equipment shall be located to allow a minimum of 1 meter clearance around all access/service panels. Clearance around electrical and electrical panels shall be provided in accordance with the National Electrical Code (NEC). Access panels designed for removal and/or replacement of parts, which require greater than 1 meter (3 feet) for this activity, shall be provided with sufficient clearance to remove the largest and/or longest part of the assemblage. All access panels shall be appropriately labeled with stencils, or a minimum of 75 mm (3 inch) tall letters. Building mechanical equipment shall be held in place with anchor bolts set in "green" concrete and held in place by plywood templates until the concrete has cured. Inertia pads shall be provided for equipment where recommended by equipment manufacturer. Housekeeping and vibration isolation pads shall be provided for mechanical equipment. Contractor shall provide all safety equipment required to operate and install the equipment.

6.3.2 System Maintainability

(a) System maintainability is a critical, but often overlooked, aspect of a facility. The contractor shall provide for maintenance of all items in this facility. This shall be coordinated with all systems (it is unacceptable planning to install lights, then block access to them with pipes and conduit). System maintainability has three broad categories. The design analysis and O&M manuals shall address these features/procedures in detail:

(1) Routine Maintenance (filters, lights, lubrication, inspection, etc.): This requires the most frequent and easiest access. The need for portable or fixed ladders (no more than 3 m (10 ft)) should be minimized and, where needed, ensure that space is available to use them properly. The exhaust/recirculation filter system is a special case and must be provided with permanent access (stairs, catwalks, hoists, platform lifts, etc., excluding ladders) to allow a five- to seven-person crew (in PPE) to simultaneously work on the filters at one time, including transporting clean filters up, replacing the filters, and collecting the dirty filters.

(2) Component Replacement (coils, fans, motors, boiler/chiller tubes, etc.): This requires less frequent access, but when the need arises, this work must be done quickly and efficiently, since normally this has the greatest impact on the user. Everything needed to perform these tasks shall be provided (work platforms, equipment access hatches/panels, hoists, cranes, freight elevators, etc.).

(3) Equipment Replacement (air handling unit, switchgear, boilers, chillers, etc.): This occurs very seldom so permanent equipment to support these tasks is not required. However, equipment replacement must be accommodated and the facility shall include items such as removable wall sections, access routes, etc. to allow replacement with the least amount of collateral damage.

(b) Ensure that all equipment, including filters, controls, control valves, backflow preventers, and coils are easily accessible and have ample room for servicing, inspection, and cleaning. Isolation valves shall be provided for each terminal unit, zone, branch, long runs, etc. as necessary for proper isolation and maintenance. As a minimum, process systems shall be provided so that no more than one side of the hangar bay need be shut off to work on the distribution system. Isolation valves shall be located in the equipment rooms, not in the hangar bay. Coils shall be fully removable without requiring demolition of any building components. Piping configuration at all coils shall include unions to facilitate easy coil removal.

(c) The design-build contractor shall ensure that all maintenance and repair activities can be performed safely and efficiently without needing to bring in extensive material handling (i.e. A-frames) or access equipment (i.e. ladders).

(d) Locate all valves, pumps, strainers, controls, sensors, and other items requiring regular service such that they may be maintained from floor level when possible. If not accessible from floor level, then permanent maintenance access shall be provided.

(e) Ensuring maintainability requires careful coordination of piping, conduit, etc., to avoid blocking access by cranes, hoists, ladders, etc. The contractor shall make this a priority, recognizing that this will generally result in longer runs of pipe/conduit.

(f) All above ceiling utilities (cable trays, ductwork, junction boxes, utility piping, etc.) shall be accessible for a worker to reach two sides plus the service side with a minimum 1.0 m (3′-3″) clearance (greater if required for component maintenance/disassembly).

(g) Permanent maintenance access shall be provided for all suspended mechanical equipment. Refer to the Architectural section for requirements. Provide catwalks for all equipment requiring servicing located above ceilings.

(h) Roof-mounted equipment is prohibited.

(i) Water treatment systems for boilers/chillers/cooling towers (if provided) shall be designed and installed such that chemical handling is accomplished at floor level.

6.3.3 Operations/Maintenance Manuals

Operations and Maintenance Manuals – Contractor shall provide Operation Manuals, Maintenance Manuals and spare parts inventory lists for each piece of mechanical equipment. Contractor shall furnish control diagrams as part of as-built documentation. Refer to Section 01012 for requirements.

6.3.4 Operator Training

Contractor shall provide operator training for all systems for which an operation and/or maintenance manual is provided. In addition, the contractor shall provide video tapes of the training sessions. Training shall be in two parts; individual equipment training on each piece of equipment, and an integrated operational training session on the entire process (from turning on the lights, to towing the aircraft out of the dock and cleaning up). Training and manual shall be sufficient for someone with little or no prior experience in stripping aircraft would be able to properly set up the facility and equipment to strip an aircraft. Refer to Section 01012 for addition requirements.

6.3.5 Spare Parts

Contractor shall provide all manufacturers recommended spare parts for all mechanical systems.

6.3.6 Vibration Acceptance Criteria

All rotating equipment (facility or process) with a motor of 15 kW (20 hp) or greater shall be provided with a triaxial accelerometer cluster for each bearing (motor and driven equipment), and shall be vibration tested and aligned to be at or below 2.5 mm/sec (0.1 in/sec) velocity. Accelerometer shall be provided with a 4-pin connection, be fully hermetic, and be suitable for an industrial environment. Provide one hand held battery powered data collector to be used for both paint and depaint facilities. Accelerometers shall be factory installed for equipment with motors located within a factory enclosure.

As part of the Testing and Balancing process, Contractor shall provide narrow-band, high-resolution triaxial spectral data to the Contracting Officer’s Representative, and assist the government in placing the data into the existing government predictive maintenance software database.

6.4 PLUMBING REQUIREMENTS

Plumbing system shall be designed and installed in accordance with the International Plumbing Code (IPC), latest edition. Inspection and testing of the plumbing system shall be performed as prescribed in the IPC. The plumbing system shall conform with the applicable rules of the International Building Code, governing venting of plumbing fixtures, sizing of waste, vents, drains, and water systems. Backflow preventers shall be provided at the building entrance, located in an accessible location inside the building. Fixture count shall be as required by International Building Code. All piping shall be labeled, color coded, titled, and indicate direction of flow. All shutoff/isolation valves and water hammer arresters shall be accessible from the floor level. If installed above hard ceilings, access doors shall be provided. UFGS Section 15400A PLUMBING, GENERAL PURPOSE shall be the basis for the plumbing system specifications. UFGS Section 15190 GAS PIPING SYSTEMS shall be the basis for the gas piping system specifications.

6.4.1 Domestic Hot Water Temperatures

Hot water delivered to plumbing fixtures shall not exceed 49 deg C (120 deg F).

6.4.2 Plumbing Materials, Equipment and Fixture Requirements

6.4.2.1 Material for Domestic Water Lines

Water piping under concrete slab floors shall be copper tubing, Type K, annealed and shall be completely wrapped in polyethylene. Joints under the slabs are not permitted. Materials for various services shall be in accordance with Table II – Pipe and Fitting Materials for Pressure Piping Systems of UFGS Section 15400A PLUMBING, GENERAL PURPOSE. Pipe schedules shall be selected based on service requirement. Select one piping material for each type of system. Material or equipment containing lead shall not be used in any potable water system. Plastic pipe shall not be used for buildings exceeding 7.3 m (24 ft) in height.

6.4.2.2 Routing and Design

All piping shall be concealed, properly supported with allowances for expansion and contraction. Interior water distribution piping shall not be buried under concrete floors. All piping systems shall be drainable. Interior hot and cold water piping systems shall be insulated. Water piping systems (including sprinkler piping) shall not be routed or located where subjected to freezing and shall be located within the insulated building envelope. Heat tracing (to prevent freezing) of interior piping systems will not be allowed. Individual shutoff or stop valves shall be provided on water supply lines to all plumbing fixtures. Individual stops shall also be furnished at all equipment connections such as dishwashers, vending machines, icemakers, etc. Shower control valves shall be provided with integral stops (shut-offs). Isolation shutoff valves shall be provided for each toilet room group to allow isolation shutoff for maintenance purposes while continuing service to the remainder of the restrooms. Consolidate fixture vents through one common vent whenever possible. All vent penetrations through the roof shall be made through a roof jack designed for use with the roofing system furnished and color-matched to the roof. Aboveground piping shall run parallel with the lines of the building and in accordance with UFGS Section 15400A PLUMBING, GENERAL PURPOSE, unless otherwise indicated. Emergency eye wash stands located in the strip bay shall drain to the outside.

6.4.2.3 Material for Waste Lines

Materials for various services shall be in accordance with Table I – Pipe and Fitting Materials for Drainage, Waste, and Vent Piping System of UFGS Section

15400A PLUMBING, GENERAL PURPOSE. Pipe schedules shall be selected based on service requirement. Pipe fitting shall be compatible with applicable pipe. Plastic piping systems shall not be install in air plenums. Soil, waste, drain and vent piping installed in spaces used as HVAC air plenums shall be cast iron. Each fixture and piece of equipment requiring connections to the drainage system shall be equipped with a trap, and all fixtures shall be vented. Surface or wall cleanouts shall be provided for each drainage main. Cleanouts shall be provided at each change in direction of sanitary sewer lines, at the intervals specified in the Standard Plumbing Code, and at the building service entrance. All cleanouts shall be permanently accessible. Ground cleanouts shall be installed in a 305 mm by 305 mm (12″ x 12″), 100 mm (4 inch) thick concrete pad, flush with grade. Pipes passing through the slab shall pass through a pipe sleeve and be installed in accordance with UFGS Section 15400A PLUMBING, GENERAL PURPOSE.

6.4.3 Gas Piping and Connections

The use of semirigid tubing and flexible connectors for gas equipment and appliances is prohibited. Provide accessible gas shutoff valve and coupling for each gas equipment item. Materials for gas piping shall be in accordance with UFGS Section 15190A GAS PIPING SYSTEMS. Installation of interior gas piping shall be in accordance with NFPA 54 and AGA-01. Refer to the Civil Design Criteria section for gas distribution system located outside of the building.

6.4.4 Plumbing Fixtures

Fixtures shall be provided complete with fittings, and trim. All shutoff valves shall be metal construction. Plastic valves are not acceptable. All fixtures, fittings, and trim in a project shall be from the same manufacturer and shall have the same finish.

6.4.4.1 Plumbing shall meet the following criteria:

(a) In general, all faucets shall have solid brass bodies, ceramic valving, and chrome plated or trim. Water flow shall be no more than 0.16 L/s (2.5 gpm) from any faucet.

(b) Fixtures shall be water conservation.

(c) All vitreous china plumbing fixtures shall conform to ANSI A112.19.2M, Vitreous China Plumbing Fixtures. Stainless steel fixtures shall be in accordance with ANSI A112.19.3M, Stainless Steel Plumbing Fixtures (residential design).

(d) Floor drains shall be provided in toilet rooms, mechanical rooms and for equipment requiring drainage. Floor drains shall be cast iron body and grate. All floor drain traps shall be automatically primed by single trap primers or where appropriate, distribution unit type trap primers.

(e) Fixture descriptions shall be as described by the American Society of Mechanical Engineers, ASME A112.19.

(f) Provide hose bibbs in boiler, chiller, and mechanical rooms.

6.4.4.2 Water Closets

Siphon-jet, elongated bowl, top supply spud, ASME A112.19.2M, wall hung. Gasket shall be wax type. Seat - ANSI Z124.5, Type A, white plastic, elongated, open front. Flushometer Valve - ASSE ANSI/ASSE 1037, large diaphragm type with non-hold-open feature, backcheck angle control stop,

vacuum breaker, and battery operated electronic actuation. Minimum upper chamber inside diameter of not less than 63.5 mm (2.5 inch) at the point where the diaphragm is sealed between the upper and lower chambers. The maximum water use shall be 6 liters (1.6 gal) per flush. Water closet trim shall conform to ANSI A112.19.5, Trim for Water-Closet Bowls, Tanks, and Urinals (Dimensional Standards). Any water closets designed as handicap water closets shall meet the top rim of the bowl height requirements of CABO A117.1.

6.4.4.3 Urinals

Wall hanging, with integral trap and extended shields, ASME A112.19.2M, siphon jet. Top supply connection, back outlet. Flushometer Valve - ASSE ANSI/ASSE 1037, large diaphragm type with non-hold-open feature, backcheck angle control stop, vacuum breaker, and battery operated electronic actuation. Minimum upper chamber inside diameter of not less than 63.5 mm (2.5 inch) at the point where the diaphragm is sealed between the upper and lower chambers. The maximum water use shall be 3.8 liter (1.0 gal) per flush. Urinal trim shall conform to ANSI A112.19.5, Trim for Water-Closet Bowls, Tanks, and Urinals (Dimensional Standards).

6.4.4.4 Wash Fountains

Accessible, flush to wall, linear design, wash-up fixture. Modular wash fountain station shall provide three hand washing stations with the centerline of each station located on 762 mm (30 inch) centers, perpendicular to the mounting wall. Hand washing station shall be wall hung, ADA accessible, secured to a rigid base concealing all supply and waste connections. Bowl material shall be cast polyester resin complying with ANSI Z124.3 and ANSI Z124.6, with decorative stone finish. Base shall support hand washing stations to ANSI Z124.3 load ratings. Each hand washing station shall have a liquid soap dispenser and be provided with a streamformer served by an independent solenoid valve and actuated by an infrared sensing module. Wash fountain shall include all waste and supply connections to wall, thermostatic mixing valve with stop, strainer and check valves.

6.4.4.5 Standard Shower

(a) Shower valve shall be single lever, pressure-balancing, thermostat mixing type, designed to maintain constant water temperature by automatically compensating for water pressure changes. Faucet shall be of solid brass construction with washerless ceramic valving. Adjustable pattern showerheads shall be provided and shall be chrome plated or polished nickel finish to match levers and escutcheons. Provide a flow control device with the shower head to limit the flow to a maximum of 0.16 L/s (2.5 gpm) at a flowing pressure of 550 kPa (80 psig).

(b) Drain: stainless steel.

6.4.4.6 Break Room Sinks

Provide two sinks, constructed of stainless steel. Faucets shall be same as the lavatory faucets in material, but designed for kitchen sink application.

6.4.4.7 Water Cooler Drinking Fountains

Water cooler drinking fountains shall be located in close proximity to each restroom and break room. Corridors which are distant from these rooms shall contain at least one water cooler drinking fountain as well. Water cooler drinking fountains shall be self-contained, conform to ARI 1010, use one of the fluorocarbon gases conforming to ARI 700 and ASHRAE 34 which has an Ozone Depletion Potential of less than or equal to 0.05, have a capacity to deliver

28.8 L/hr (7.6 gph) of water at 10 deg C (50 deg F) with an inlet water temperature of 26.6 deg C (80 deg F) while residing in a room environment of 32.2 deg C (90 deg F) and have self-closing valves. Self-closing valves shall have automatic stream regulators, have a flow control capability, have a push button actuation or have a cross-shaped index metal turn handle without a hood. Exposed surfaces of stainless steel shall have No. 4 general polish finish. Spouts shall provide a flow of water at least 100 mm (4 inch) high so as to allow the insertion of a cup or glass under the flow of water.

6.4.4.8 Wall Hydrants (Exterior)

Wall hydrants shall be provided at a maximum spacing interval of 60 m (200 ft) around the exterior wall of the building. Each hydrant shall be box type, freeze proof, with an integral vacuum breaker/backflow preventer. Hydrants shall have 20 mm (3/4 inch) hose connections.

6.4.5 Major Appliance Plumbing Connections

The Contractor shall provide appropriate connections for all appliances, vending machines, ice machines, and any other items requiring water and/or drain connections.

6.4.6 Domestic Water Heater

Domestic water heater shall be natural gas type, with a heating capacity and auxiliary storage adequate for the building occupancy. A pressure/temperature relief valve, vacuum breaker on the water supply line, drain and a 150 mm (6 inch) concrete pad shall be provided for the water heater and/or storage tank. Domestic hot water heater shall be equipped with a recirculation pump and recirculation piping and balancing valves.

6.4.7 Testing

Test soil, waste and vent piping by capping or plugging and filling the system with water, allowing it to stand filled for 1 hour. If tested in sections, each section shall be subjected to not less than a 3 m (10 ft) head.

Test cold water, hot water, and hot water circulating by applying a hydrostatic pressure of 860 kPa (125 psig) for 1 hour.

Test piping under floor slabs in floor fill before slabs are poured.

Soldered piping which is not tight under tests shall be taken down and reassembled. Joints in cast iron hub and spigot pipe not tight under test shall be replaced. Joints in cast iron no-hub pipe not tight under test shall be taken down and reassembled using new couplings.

Test each fixture for soundness, stability of support and operation. Fixture shall exhibit no movement from an 82 kg (180 lb) person exerting moderate force on fixture.

Submit a statement certifying that piping has passed the herein specified tests.

Tests shall be made while pipe is exposed to view.

6.4.8 Piping Materials

UFGS Section 15400A Table I and II shall be the basis for plumbing systems and materials.

6.5 HEATING, VENTILATING, AND AIR CONDITIONING REQUIREMENTS

6.5.1 General

The heating, ventilation, and air conditioning equipment shall be as described herein.

6.5.2 Mechanical Design References

The mechanical systems will be designed in accordance with the Base Facility Standard (BFS) – Robins AFB, GA, ASHRAE standards, and Military Handbooks.

The following design criteria and standards shall be used in the mechanical systems design:

- Savannah District Engineering Design Manual for Military Construction, dated February 2002, Revised August 2002.
- Savannah District Drafting Standards.
- ASHRAE Manuals, latest edition.
- NFPA 90A, Installation of Air Conditioning and Ventilating Systems.
- NFPA 90B, Installation of Warm Air Heating and Air Heating and Air Conditioning Systems.
- ASHRAE Standard 62, Ventilation for Acceptable Indoor Air Quality.
- Technical Instructions, Design Criteria, T1-800-01, 20 July, 1998.
- TM 5-805-4 Noise and vibration Control for Mechanical Equipment.
- TI 809-4 Seismic Design for Building.
- TI 810-10, 1 FEB 99, Mechanical Design, Heating, Ventilating, and Air Conditioning
- MIL-HDBK-1190 Facility Planning and Design Guide
- Base Facility Standard (BFS) – Robins AFB, GA
- UFC 3-400-02, Design: Engineering Weather Data, 28 Feb 2003.

6.5.3 Motors

Single-phase, fractional-horsepower, alternating-current motors shall be high efficiency types, corresponding to the applications listed in NEMA MG 11. Polyphase motors shall be selected based on high-efficiency characteristics relative to the applications as listed in NEMA MG 10. Additionally, all polyphase squirrel-cage medium-induction motors with continuous ratings shall meet or exceed energy efficient ratings in accordance with Table 12-10 of NEMA MG 1.

6.5.4 Variable Frequency Drives

The same manufacturer shall provide all variable frequency drives (VFD’s) used on electric motors for system components. Variable frequency drives shall be solid state, with a Pulse Width Modulated output waveform. The VFD’s shall employ a 12 pulse full wave rectifier, DC Line Reactor, capacitors and insulated Gate Bipolar Transistors as the output-switching device. The drive efficiency shall be 97% or better at full speed and full load. Fundamental power factor shall be 0.98 at all speeds and loads. Enclosure shall be NEMA Type 1, or as dictated by location. The VFD’s shall have a door interlocked disconnect switch and a manual bypass switch, which allows servicing of the drive while the driven equipment is operating. Variable frequency drives must be set-up during testing and balancing procedures. A control interface shall be provided to allow for remote monitoring of VFD functions and alarms from the DDC control system front-end computer.

6.5.5 Metering: Gas, Electricity, and Potable Water

Potable water, electricity, and gas meters shall all have pulse outputs, data collection/communication capability and shall be compatible with Robins AFB Standards. All meters shall be monitored by the SCADA system primary / DDC system secondary

6.5.6 Cathodic Protection

All ferrous underground piping, including all underground structures, tanks, etc., shall be cathodically protected using a sacrificial anode system designed in accordance with the requirements of Section 8 of these specifications.

6.5.7 HVAC Calculations

Design Criteria: Heat gain and loss calculations shall be, as a minimum, in accordance with the current edition of the American Society of Heating, Refrigeration, and Air Conditioning Engineers (ASHRAE) Handbook of Fundamentals. Computer generated loads must be submitted with complete input and output summaries during the design process. Load calculation software must be ASHRAE based. The cooling equipment shall be selected based on satisfying both the total and latent calculated loads. System shall be designed, installed, balanced, and adjusted to distribute heating and cooling to all habitable rooms, in proportion to the calculated heat losses/gains in these rooms. Heating shall also be provided to mechanical rooms, and other unoccupied areas as needed to prevent pipes from freezing.

Verify ventilation rates of each space with the referenced publications in this mechanical design section. Conduct air balance calculations for the spaces in the facility to verify total supply air, outdoor air, return air, and exhaust air. The space (airflow) pressure relationships shall be maintained. Administrative areas shall maintain a positive pressure with respect to outdoors and the hangar to aid in keeping generated pollutants and hazardous particles out of the office supply airstream. Total airflow calculations shall be performed to verify that the administrative area pressure is positive with respect to outdoors and to the hangar.

Air locks shall be provided between the clean and dirty locker rooms and shall be pressurized to -10 Pa (-.04 in w.c.) relative to clean side and +20 Pa (+.08 in w.c.) relative to dirty side. The design shall reflect heating and cooling capacities based on the following design conditions.

6.5.8 Heating, Ventilation, and Air Conditioning (HVAC)

6.5.8.1 Comfort HVAC

Comfort heating and cooling shall be provided by a central packaged air handling unit with DX cooling and indirect fired, natural gas fired heat. Zone control shall be provided by variable air volume diffusers with hot water duct heating coils for zone heating. For energy conservation, an enthalpy heat recovery wheel shall be provided in the air handling unit to recover energy from the toilet/locker room exhaust air stream.

(a) Comfort Cooling Systems Design: Comfort cooling for the administrative/ occupied areas shall be provided by the packaged DX air handling unit, mounted on grade adjacent to the facility. System shall be designed for 23.8 deg C (75 deg F) cooling and 50% relative humidity.

(b) Comfort Heating System Design: Comfort heating for the administrative/ occupied areas shall be provided by an indirect-fired, natural-gas-fired

burner in the packaged air handling unit. Individual space heat shall be provided by hot water duct heating coils, fed from forced-draft gas-fired, hot water boilers with redundant hot water pumps. System shall be designed to maintain 21.1 deg C (70 deg F). Provide humidification if required to maintain 30% RH minimum. Electric heating shall be prohibited for comfort applications, except where used in Computer Room Air Conditioning Units.

(c) Air Distribution Zoning: The air handling systems shall be zoned by functional requirements, operation schedules and environmental control conditions, and load characteristics.

(d) Individual Room Requirements: Refer to Appendix C – Functional Room Requirements, for specific minimum requirements for space heating, ventilating, and air-conditioning.

6.5.8.2 Ventilation Systems Design

Ventilation for building occupants shall be provided in accordance with ASHRAE Standard 62, latest revision. Unit shall maintain a constant minimum outside airflow by electronic airflow measurement station as required. The outside air intake shall be located away from fumes including vehicle exhaust, toilet exhaust, etc., and in accordance with Force Protection requirements. Exhaust systems shall exhaust all toilet rooms, janitor's closets, lockers, and other spaces as required.

6.5.8.3 Electrical Rooms And Mechanical Rooms

(a) Mechanical Rooms shall be heated and ventilated. The space shall be maintained at 12.8 deg C (55 deg F) in winter and maximum of 5 deg C (9 deg F) above outside design ambient in summer. Ventilation shall be positively introduced within the mechanical room.

(b) Electrical Room shall be conditioned and have individual room temperature control. The space shall be maintained 30 deg C (86 deg F) in summer and 12.8 deg C (55 deg F) in winter, or as recommended by the electrical gear manufacturer. Space cooling shall account for closely spaced electrical gear. Room conditions shall be sufficient to keep interior cabinet temperatures within a range to allow a full 20-year life from all components.

(c) Communication Rooms shall be maintained at 26.7 deg C (80 deg F) in summer and 18 deg C (65 deg F) in winter.

6.5.8.4 Depaint Strip Bay Heating and Ventilation

The Depaint strip bay shall be provided with heating and ventilation and process cooling (as an option) as described in the Process Heating, Ventilating, Cooling, and Exhaust (PHVCE) System paragraph.

6.5.8.5 Weather Data

Robins AFB:

Summer: 34.4 deg C (94 F) dry bulb / 24.4 deg C (76 F) coincidental wet bulb (1% Occurrence)
25.6 deg C (78 F) wet bulb / 31.7 deg C (89 F) coincidental dry bulb (1% Occurrence)

33.3 deg C (92 F) dry bulb / 23.9 deg C (75 F) coincidental wet bulb (2% Occurrence)

25.0 deg C (77 F) wet bulb / 31.1 deg C (88 F) coincidental dry bulb (2% Occurrence)

Winter: -2.2 deg C (28 F) dry bulb (99% Occurrence)

All systems, with the exception of the optional process cooling, shall be sized for the worst case cooling loads at 1% DB/MCWB and 1% WB/MCDB outside air conditions. Process cooling plant capacity shall be sized for the worse case 2% DB/MCWB and 2% WB/MCWB. Refer to Appendix R for Robins AFB Weather Data.

6.5.8.6 Internal Loads

All internal loads shall be considered when calculating cooling loads for air conditioning and ventilation.

6.5.9 Life Cycle Cost Analysis

A life cycle cost analysis is not required under this contract. The administrative and conditioned areas shall be conditioned with a constant volume air handling unit with direct expansion (DX) cooling coil, indirect fired gas heat, and an enthalpy heat recovery wheel. Zone control shall be provided by variable air volume diffusers with hot water reheat coils as required for perimeter heat. System shall be provided with a bypass damper to maintain duct static pressure. Variable air volume (VAV) units are not acceptable. Exhaust from the toilets, locker rooms, etc. shall be ducted through the enthalpy heat recovery wheel to recover heat from the exhaust air stream.

Computerized energy calculations shall be performed using Trane TRACE700, Carrier Hourly Analysis, BLAST, DOE-2, or EnergyPlus programs. Calculation shall be based on actual expected hours of operation, energy usage, and shall include process/miscellaneous loads. Provide the complete input (room, systems, system assignment, plants, plant assignment, custom members, custom schedules) and output of the energy analysis program.

6.5.10 Energy Conservation

Public Law 100-615 and Federal Regulations 10 CFR 435 Subpart B, require Federal buildings to be designed and constructed to reduce energy consumption in a life-cycle, cost-effective manner using renewable energy sources when economical. Each system, component or feature selected that impacts the energy or water use of the facility shall be in compliance with ASHRAE Standard 90.1. ASHRAE Standard 90.1 is essentially the same as 10 CFR 435, and like 10 CFR 435 presents several conformance paths. The path selected to show compliance with ASHRAE Standard 90.1 shall be clearly identified. In addition, energy efficiency ratings for equipment shall be in the upper 25 percent of that available as long as these efficiencies are life cycle cost effective. The Department of Energy (DOE) and Federal Energy Management Program recommendations from the Buying Energy Efficient Products Guide and the Environmental Protection Agency Star products program meet these requirements. The DOE recommendations are available at www.eren.doe.gov/femp/procurement. Submittals from the successful bidder shall be in compliance with above and address energy conservation features such as economizer cycles, variable frequency drives, heat recovery, etc.

Energy consumption budget for the entire depaint facility: In addition to the DEU budget, which excludes process loads, Executive Order 13123 requires reducing industrial (process) energy usage by 20% on a “unit of production” basis. For this process the unit of production is square meter of aircraft

surface. The annual energy consumption budget for this facility is 656 kw-hr/m^2 aircraft surface (208 MBtu/sf aircraft surface area) based on 26 C-5 aircraft/yr at 2500 m^2/aircraft (26,910 sf/aircraft), including process cooling. Facility operational hours are 20 hours/day, 5 days/week. Lower energy consumption will be considered an advantage.

6.5.10.1 Energy Budget Calculations

An Energy Analysis shall be performed to determine a design energy usage (DEU) budget. The DEU shall be calculated and compared to the maximum energy use budget value (EUB) for facility type A1 for weather region 11 per ETL 94-4.

The goal for this facility is to provide a DEU that is 20% less than the EUB. Proposers that exceed the 20% less than the EUB shall not be considered non-responsive but will receive a lower rating. The DEU shall include air conditioning, heating, ventilating, lighting, and domestic hot water usage for the facility. The DEU budget shall not include process loads. Process energy load is the energy consumed in support of all functions other than comfort and amenities for building occupants (refrigerators, stoves, computers, instruments, etc.).

The operational hours for the calculation shall be 10 hours/day, 5 days/week for the facility type. Use 0700-1600 as the 10-hour period for energy budget calculations. The DEU budget shall be based on availability of energy systems during 10 hours. For the remaining 14-hour period lights, people, heating, air conditioning, and ventilating will be scheduled as OFF.

The area used in the DEU budget estimation is the gross floor area which is defined as the sum of all floor areas, measured from the outside of the exterior walls.

Calculation of the DEU shall be performed by computerized methods. Computerized calculations shall be performed using the Trane TRACE 700 or the Carrier Hourly Analysis programs. Detailed, room-by-room calculations shall be performed with the energy simulation calculated for 8,760 hour per year.

Conversion Factors: Energy use or savings shall be calculated using the following factors. These conversion factors are given by ETL 94-4. Equipment efficiencies and system losses must be accounted for in calculations. For energy media not listed here, use current standard Engineering data or other approved reference data.

ENERGY MEDIUM	CONVERSION FACTORS
Natural Gas	10.66 kWh/m^3 (1030 Btu/cf)
Electricity	1 kWh/kWh

The DEU budget calculations (including all input and output information) are to be submitted by the successful proposers at the concept design stage. All proposers must submit in their proposals a statement that they will provide a facility that does not exceed the energy budget.

6.5.10.2 U-Values

Utilize the U-values presented below as a starting point. These values may be modified if a life cycle cost analysis indicates that a more cost-effective value should be used. The life cycle cost analysis shall be based on the Department of Energy (DOE) Federal Energy Management Program (FEMP) criteria according to the provision of the latest version of Code of Federal Regulations, 10 CFR 436A. For guidance on the methodology, refer to National Bureau of Standards Handbook 135, Life Cycle Costing Manual for the Federal Energy Management Program.

Nominal U-Values (W/m^2*K) for Exposed Floors, Ceilings, and Walls

Heating Degree Days: 2547 Ref 18.3 deg C (65 deg F)
Cooling Degree Days: 2271 Ref 18.3 deg C (65 deg F)
Opaque Walls: 0.852 W/m^2*K (0.15 $Btu/hr*ft^2*F$)
Gross Walls: 1.532 W/m^2*K (0.27 $Btu/hr*ft^2*F$)
Ceiling/Roof: 0.323 W/m^2*K (0.06 $Btu/hr*ft^2*F$)
Floor: 0.568 W/m^2*K (0.10 $Btu/hr*ft^2*F$)

The U-values above are taken from ETL 94-4, Attachment 6, for weather region 11. Coordinate actual U-values with the architectural design of the facility.

6.5.11 Acoustical Criteria

Systems shall be designed to meet the following noise criteria during full DMSS operation. Contractor shall calculate noise levels based on actual equipment provided, and considering all sound sources such as equipment, number of users, heating and ventilation system, room effect, etc.:

Area	**NC Level (dBA)**
General offices	35
Break room and locker rooms	40
Equipment Rooms (including air handling unit equipment and service corridors)	75 dBA max at 1 m from equipment 50 dBA max in adjacent corridors
De-Paint Hangar	98 dBA goal, 114 dBA maximum at the worker during DMSS operation 78 dBA max - non DMSS operation (include AHU and EF sound sources)
Exterior	60 dBA @ 1.5 m from equipment or equipment enclosures, 2 m above grade

Contractor shall work to minimize noise hazards in the De-Paint Hangar.

Acoustical treatment such as sound-attenuating wall construction, duct lining, and sound attenuators shall be used to achieve these levels. Any spaces not specifically listed above shall be coordinated with the user.

Vibration transmission from equipment shall be minimized with the use of vibration isolation equipment as required.

6.5.12 Testing, Adjusting, and Balancing

The mechanical system testing, adjusting, and balancing (TAB) shall be in accordance with UFGS Section 15995 COMMISSIONING OF HVAC SYSTEMS and in accordance with the Base Facility Standard (BFS) – Robins AFB, GA. TAB requirements shall be clearly detailed on the design drawings and shall be clearly stated in the construction specifications to ensure the HVAC systems are properly installed, balanced and calibrated prior to building occupancy. TAB procedures shall be in accordance with ASHRAE Standards.

Refer to TESTING, ADJUSTING, AND BALANCING Section for additional requirements.

6.5.13 Mechanical Equipment

Mechanical equipment shall be designed in accordance UFGS guide specifications listed in this section of mechanical design. The equipment described below is a minimum. All materials and equipment provided shall be standard catalogued products of manufacturers regularly engaged in the production of such materials and equipment shall be of the manufacturers' latest standard design. Equipment shall comply with the requirements of Underwriter's Laboratories, Inc. (UL), Air Conditioning Refrigeration Institute (ARI), American Society for Testing and Materials (ASTM), National Electric Manufacturer's Association (NEMA), American National Standards Institute (ANSI), National Fire Protection Association (NFPA), or other national trade associations as applicable.

All pieces of floor mounted mechanical equipment shall be installed on a 150 mm thick concrete equipment pad. Provide pad 150 mm (6 in) larger than equipment footprint on all sides. Install dowel pins into floor slab prior to pouring equipment pad. All suspended equipment shall be properly supported according to the manufacturer's instructions. Provide trapeze hangers for larger pieces of equipment. Provide adequate clearance around all pieces of equipment for periodic maintenance, inspection and cleaning. Service of one piece shall not require disturbance of adjacent equipment.

Each piece of motorized equipment shall be provided with vibration isolators with seismic restraints. Nominal deflection and natural frequency of isolation equipment shall be selected based upon equipment size and structural attachment details.

All strainers and air separators are to be equipped with blowdown valves and piped to a floor drain.

The mechanical room shall be separate from the electrical utility room and be accessible from an exterior door. The mechanical room shall house any central equipment for facility comfort conditioning (air handling units may be located outside to conserve building space). All equipment shall be accessible from the first floor or mezzanine level.

Mechanical components shall be installed and mounted in accordance with TI-809-4 "Seismic Design for Buildings." The design for seismic protection shall be based on a seismic Use Group II.

6.5.14 Air Handling Equipment

6.5.14.1 Fans

Fans shall be AMCA 210 certified, with AMCA seal. Fan bearings shall have a minimum average life of 200,000 hours at design operating conditions. Provide accelerometers for all motors 20 kw (15 hp) and larger. Provide nominal 2-mesh, 1.6 mm (16 gage) wire diameter, bird screens for outdoor inlets and outlets. Fan submittals shall include vibration isolation details.

6.5.14.2 Comfort Conditioning Air Handling Units

(a) Comfort conditioning air handling unit shall be a factory packaged unit. Unit shall include an air cooled condensing section, DX cooling coil (may be chilled water if process cooling option is exercised), indirect gas-fired heat, mixing box, heat pipe sections, filter section, and draw-through supply fan. Fan shall be ARI 430 certified and coils shall be ARI 410 certified. Units shall be rated as an entire assembly. Unit shall be constructed of 50 mm (2 inch) thick preinsulated double-wall panels of solid galvanized steel. Unit construction shall be in accordance with UFGS Section 15895 Air Supply, Distribution, Ventilation, and Exhaust System.

(b) A minimum 610 mm (24 inch) access section with door shall be provided upstream of each coil or heating section. Maximum cooling coil face velocity shall be limited to 152 meters per minute (500 fpm). Cooling coil section shall be provided with an IAQ-rated stainless steel drain pan, with liquid drain trap and cleanout plug that shall be easily accessible for maintenance purposes.

(c) Mixing box shall be factory fabricated and configured with dampers to promote mixing of return air and outdoor air streams. Provide filter sections with 35% ASHRAE efficient pre-filters and minimum 75% ASHRAE efficient final filters. Control dampers shall be constructed to provide no more than 50.8 L/s/m^2 (10 cfm/ft^2) air leakage at 995 Pa (4 in w.c.).

(d) Supply fan section shall be equipped with non-overloading centrifugal fan mounted on a steel base frame. Fan base shall be isolated from air handling unit base rails by the use of housed spring isolators. Fans shall be V-belt driven by belt drives sized for 150% of design power requirement. Provide adjustable sheaves for fans up to 15 kW (20 hp).

(e) A control interface shall be provided to allow for remote monitoring of AHU functions and alarms from the DDC control station. Air handling equipment that has corrosion protection must comply with ASTM A 1654, using a standard scratch. Large air handlers, requiring personnel entry for maintenance purposes shall have lights and one 120V electrical outlet installed in each section.

6.5.14.3 Process Heating and Ventilating Air Handling Units

(a) Process Heating and Ventilating Air Handling Units: Air handling units shall be factory-packaged or semi-custom units with filter section, heating section, humidifier, and supply fan. Units shall be constructed of 50 mm (2 in) thick pre-insulated double-wall panels, with maximum 1% cabinet leakage at 125% of the system static pressure. Unit construction shall be in accordance with the requirements of UFGS Section 15895 AIR SUPPLY, DISTRIBUTION, VENTILATION, AND EXHAUST SYSTEM and as specified herein. Exterior air handling units shall be provided with an enclosed service vestibule, and shall be factory-coated, custom-color to match adjacent facility. Control algae/mold on exterior of units. For units located on grade, provide a ventilated curb under the unit or provide other acceptable means to control algae growth. Do not place units directly on the concrete slab. These air handling units are subject to the same maintainability requirements as other areas of the facility.

(b) Outside air intake section shall be factory fabricated and configured with OA dampers and outside air louver or intake hoods. Dampers shall be constructed to provide no more than 50.8 L/s/m^2 (10 cfm/ft^2) air leakage at 995 Pa (4 in w.c.). Provide filter sections with 30% ASHRAE efficient pre-filters and minimum 85% ASHRAE efficient primary filters.

(c) Heating section shall be provided with a hot water heating coil, indirect-fired gas burner, or direct fired burner. Hot water heating coils shall have integral face and bypass dampers for freeze protection. Gas heat shall be capable of a turndown ratio of 30:1 (minimum), provided with UL listed gas train with all safeties and controls. Exhaust from indirect fired gas burners shall be vented to avoid cross-contamination of outside air intakes for other H&V or HVAC units. Direct fired gas burners may be used provide that at least two fans are combined into a common duct prior to mixing the conditioned outside air with the recirculated air. The intent is that should one fan fail, the duct from

that fan shall continue to be pressurized with clean air from the other fan(s).

(d) Humidifier shall be direct steam injection or self generating type. Unit length shall account for humidifier dispersion length, such that the humidifier vapor trail does not impinge on any other component in the air handling unit.

(e) Supply fan section shall be equipped with non-overloading centrifugal fan, with airfoil or backward inclined blades, mounted on a steel base frame. Fan base shall be isolated from air handling unit base rails by the use of housed spring isolators. Fans shall be V-belt driven by belt drives sized for 150% of design power requirement.

(f) A control interface shall be provided to allow for remote monitoring of AHU functions and alarms from the DDC control station. Air handling equipment that has corrosion protection must comply with ASTM A 1654, using a standard scratch. Large air handlers that require personnel entry for maintenance purposes shall have lights and one 120V electrical outlet installed in each section.

6.5.14.4 Process Cooling Air Handling Units (Bid Option)

(a) Process cooling air handling units shall be semi-custom air handling units capable of providing conditioned air to the hangar to maintain the specified temperature and humidity requirements within ±2 deg C (4 deg F) temperature and ±5% relative humidity. Units shall provide 100% conditioned outside air to mix with the return air from the hangar to provide air of the appropriate temperature and humidity to condition the hangar, and shall have a 25 year service life. Unit shall contain an outside air section with intake louver, filter section, preheat section, cooling coil section, reheat section, humidifier, and supply fan(s).

(b) Cabinet shall be constructed of 100 mm (4 inch) thick insulated double wall panels (14 gauge exterior and 16 gauge interior panels) with maximum 1% cabinet leakage at 125% of the system static pressure. Unit construction shall be in accordance with UFGS Section 15895 AIR SUPPLY, DISTRIBUTION, VENTILATION, AND EXHAUST SYSTEM and as specified herein.

(c) Exterior units shall be provided with a sloped roof and an enclosed service vestibule, and shall be factory-coated, custom-color to match the adjacent facility. Control valves and VFD’s shall not be exposed to the weather. Control algae/mold on exterior of units. For units located on grade, provide a ventilated curb under the unit or provide other acceptable means to control algae growth. Do not place units directly on the concrete slab. These air handling units are subject to the same maintainability requirements as other areas of the facility.

(d) Outside air intake section shall be provided with OA dampers and an intake air louver. Damper shall be constructed to allow no more than 50.8 L/s/m2 (10 cfm/ft^2) air leakage at 995 Pa (4 in w.c.).

(e) Filter section shall be provided with ASHRAE 30% efficient prefilters and 85% efficient final filters.

(f) Preheat section shall be hot water heating coil with integral face and bypass dampers for freeze protection, or by gas-fired (direct or indirect) heat.

(g) Cooling coils shall be sized to provide adequate cooling and dehumidification at the worse case 1% summer DB/MCWB or 1% WB/MCDB

temperature. This requirement is intentionally more stringent than sizing the chiller plant for the 2% summer design temperatures. Particular attention shall be paid to the selection and rating of the chilled water coils to meet the discharge air temperatures required to provide adequate cooling in the hangar while providing 20% outside air.

(h) Reheat coil, if required for off-peak conditions, shall be hot water or gas-fired (direct or indirect), sized to provide heating capacity required.

(i) Humidifier shall be direct steam injection or self generating type. Unit length shall account for humidifier dispersion length, such that the humidifier vapor trail does not impinge on any other component in the air handling unit.

(j) Supply fan section shall be equipped with non-overloading centrifugal fan, with airfoil or backward inclined blades, mounted on a steel base frame. Fan base shall be isolated from air handling unit base rails by the use of housed spring isolators. Fans shall be V-belt driven by belt drives sized for 150% of design power requirement.

(k) A control interface shall be provided to allow for remote monitoring of AHU functions and alarms from the DDC control station. Air handling equipment that has corrosion protection must comply with ASTM A 1654, using a standard scratch. Large air handlers that require personnel entry for maintenance purposes shall have lights and one 120V electrical outlet installed in each section.

6.5.14.5 Heat Pipes

Heat pipes for heat recovery systems shall be factory fabricated, assembled and tested, installed in a counterflow arrangement. Tube cores shall be seamless aluminum tube with extended surfaces. Tubes shall be hermetically sealed. Heat exchanger frame shall be constructed of not less than 16-gauge galvanized steel and fitted with intermediate tube supports and flange connections. Provide tube end covers and a partition of galvanized steel to separate exhaust and supply air streams without cross-contamination. A non-CFC refrigerant shall be used as the working fluid.

6.5.14.6 Exhaust and Return Fans

(a) Strip Bay Exhaust and Return Fans: Fans shall be selected for the intended use, with operating point within 10% of peak efficiency. Fan casings shall be provided with bolted or hinged access plates adequate for inspection and servicing of internal parts. Sound rating shall conform to ANSI/ASHRAE 68. Fans shall be constructed of materials compatible with materials utilized in the strip bay.

(b) Miscellaneous Fans: Exhaust fans shall be cabinet type, inline, or wall mounted. Roof-mounted fans are not acceptable. Fans shall be V-belt driven by belt drives sized for 150% of design power requirement. Provide adjustable sheaves for fans up to 15 kW (20 hp). Small fans not available with V-belt drive may be directly driven. Motor selection shall permit non-overloading operation at all conditions. All fans shall be provided with vibration isolators to decouple the motor assembly from the fan housing. Suspend fans with vibration isolators from building structure.

6.5.15 Ductwork

All ductwork shall be designed and installed in accordance with applicable SMACNA standards. Except as allowed or required in these documents, ductwork shall be constructed of galvanized steel, in accordance with SMACNA DCS and Round Industrial DCS and suitable for the pressure required in the system, and suitable for the final operating pressure of the system. The Contractor shall take into account that final T&B adjustments may increase the operating pressure above original design conditions. Bends in rigid ductwork shall be at a minimum radius to diameter ratio of 1.5. Each duct branch shall be fitted with a manual balancing damper. All ductwork shall be located above slab, supported from roof structures. Return air shall be ducted to unit from each space. Ceiling return air plenums shall not be used for administration or support areas. Duct return shall maintain NC-25 requirements at rooms for general occupancy space. Test ductwork in accordance with SMACNA 10. Total duct leakage shall not exceed 2%. Access must be provided to all devices or areas that may require periodic inspection, including but not limited to balancing devices, motor operated dampers, flow measuring stations, smoke/fire dampers, etc. Provide permanent test ports in ductwork at balancing test points and DDC sensor locations. Provide manual balancing dampers at each take-off to a diffuser, register, or grille, located as far away from the air outlet as practical.

6.5.15.1 Flexible Ductwork and Connections

Flexible duct shall be in conformance with UL 181 and may be used only for connections to air distribution devices to adapt minor offsets. Flexible duct shall be UL 181 listed and in accordance with SMACNA DCS. Provide the minimum length required to make connections, but not greater than 1.5 meters (5 ft) in total length. Do not make turns over 45 degrees with flexible duct. The purpose of flexible duct is to make minor adjustments between rigid ductwork and devices suspended in the ceiling grid.

Flexible connectors shall be provided between all fans and ducts.

6.5.15.2 Duct Insulation

All interior supply, return and relief ductwork shall be insulated with exterior insulation. Insulation, vapor barrier, and closure systems shall be noncombustible as defined in NFPA 255, with a flame-spread rating of not more than 25, and a smoke developed rating of not more than 50, as defined in ASTM E 84. Vapor barrier coating is required at all insulation terminations and penetrations for stick pins, and at all insulation seams and all insulation penetrations. Exposed heating only or exposed return air ductwork shall not be insulated. Insulate back of all air devices on air handling unit systems.

All exposed ductwork insulation shall be factory-fabricated rigid insulation board. Concealed insulation may be duct-wrap or rigid. Insulation shall be faced with a vapor barrier material having a performance rating not to exceed 1.0 perm. Ductwork located outside shall be moisture-proof to maintain the integrity of the insulation throughout its life. Options include, but are not limited to: A standing seam insulation jacket, dual-wall system, or rigid insulation, covered with a 100% acrylic fabric-reinforced system.

Insulation thickness shall be determined (1) by life cycle cost or (2) heat gain/loss not to exceed 1.0 deg C (2 deg F) against a design basis summer and winter condition, whichever is thicker.

6.5.15.3 Ductwork Identification

Ductwork shall be identified by stenciled names or code letters, in clearly visible locations. Letters shall be a minimum of 75 mm (3 inch) tall, with arrow-shaped markings indicating the direction of flow.

6.5.15.4 Air Distribution Devices

Air distribution devices shall be factory-furnished grilles, registers and diffusers constructed of aluminum. Exterior and exposed edges shall be rolled or otherwise stiffened and rounded. All registers and diffusers shall be provided with factory-fabricated volume dampers. Balancing dampers in ductwork shall be installed so as to be inaccessible to the occupants of the space being served (in the takeoffs from the duct branches rather than in the diffusers). Supply air diffusers for comfort cooling system shall be variable volume diffusers.

6.5.15.5 Dampers

Damper design and installation shall comply with SMACNA DCS. For low-pressure rectangular duct systems, use 45-degree entries and manual volume dampers into branches from the main duct. Provide manual volume dampers in each branch take-off from the main duct to control air quantity.

6.5.15.6 Fire Dampers

Fire dampers shall be provided in accordance with UL 555. Fire dampers shall be of the dynamic type, rated for closure against a moving airstream.

6.5.15.7 Smoke Dampers

Smoke dampers shall be rated in accordance with UL 555S.

6.5.16 Louvers

Outdoor air intake and exhaust louvers shall be aluminum or stainless steel, designed to prevent the entry of rain or snow. Intakes shall be located a minimum of 10 m (32 ft) from the nearest exhaust outlet and exterior mechanical equipment. Intakes shall be either 3 m (9.8 ft) above grade or shall be protected by a chain link fence 3 m (9.8 ft) from the intake, in accordance with force protection requirements. Provide louvers with birdscreens and factory finished with the color in accordance with the Base Facility Standards.

6.5.17 Heating Equipment

6.5.17.1 Hot Water System

The hot water heating system shall include gas-fired hot water boilers and circulation pumps as required to provide reheat for the comfort heating spaces. System shall include a minimum of two 65% capacity boilers.

A hot water heating system may also be provided for the heating requirements for the hangar bay process air handling units.

Hot water boiler system shall be within a size/pressure range to allow unattended operation (maximum size of 8,793 kW (30,000 Mbtuh)) in accordance with AFI 32-1068. Boilers shall be minimum 85% efficient. Manufacturer's standard packaged operation controls shall be provided to handle all aspects of capacity modulation and safeguarding. Pumps shall be base mounted and selected for non-overloading operation at all conditions. Closed coupled pumps are not acceptable. Provide a standby / redundant pump for each system. Heating systems shall be provided in accordance with UFGS Section 15569A – WATER AND STEAM HEATING; OIL, GAS OR BOTH; UP TO 20 MBTUH.

Heating water piping shall be Type L copper or ASTM A 53 Schedule 40 black steel. Ball valves shall be utilized for sizes up to 75 mm (3 inch). Larger piping shall be equipped with plug valves. Butterfly valves are not acceptable. Piping supports shall be in accordance with MSS SP-59 and MSS SP-69. System shall include an air separator, expansion tank, chemical bypass feeder and makeup water connections.

Equip circulation pumps with strainers, check valve, balance valve, flexible connections and isolation valves to permit pump maintenance. Pipe pump body drain and air vents from expansion tank to nearest floor drain. Provide pressure gages arranged such that pump differential pressure may be witnessed. Entire pump assembly shall be mounted on a structural steel frame equipped with housed spring vibration isolators.

Provide automatic water flow control valves at each coil and balancing valve in each loop of piping branch. If pumps are 11 kw (15 hp) or larger, then provide 2-way valves and VFD’s on the circulation pumps. Provide accelerometers for all motors 15 kw (20 hp) and larger.

Arrange system to ensure minimum required flow through boilers at all times. Distribution piping shall be designed as a reverse return system, with maximum water velocity of 1.2 m/s (4 fps). Piping shall be routed to provide the greatest accessibility for maintenance. Provide drain valves to allow complete system drainage and air vents at high points and coils. Air vent valves shall be installed to allow operation from 2.5 m (8 ft) above finish floor without the use of a stepladder. Heating hot water piping shall be insulated, and piping passing through hangers shall have rigid insulation shields.

6.5.17.2 Steam System (if used)

A steam system may be provided to serve the direct steam injection humidifiers in the process air handling units. System shall include a minimum of two gas-fired steam boilers, each sized for 65% peak load. System shall include boiler feedwater equipment, water softener, reverse-osmosis (RO) system, water filter, blow down steam separator and aftercooler, and condensate return pumps. Chemical water treatment is not allowed. Manufacturer’s standard packaged operation controls shall be provided to handle all aspects of capacity modulation and safeguarding. Humidification steam system shall be completely independent of the hot water heating system. Steam system shall be provided in accordance with UFGS Section 15569A – WATER AND STEAM HEATING; OIL, GAS OR BOTH; UP TO 20 MBTUH.

Steam piping shall be ASTM A 53 Schedule 80 black steel, with Schedule 80 black steel used for steam condensate return piping. Gate valves shall be utilized for open-close applications. Globe valves shall be utilized for modulating application. Piping supports shall be in accordance with MSS SP-59 and MSS SP-69. Piping shall be routed to provide the greatest accessibility for maintenance. Condensate return shall be piped separately from pumped condensate return. Piping shall be insulated, and piping passing through hangers shall have rigid insulation shields.

6.5.18 Chilled Water Equipment

This chilled water equipment is for the hangar process cooling option. Chillers shall be provided in accordance with UFGS Section 15620A – LIQUID CHILLERS. Manufacturer’s standard packaged controls shall be provided to handle all aspects of chiller staging and safeguarding. Chilled water and condenser water pumps shall be base mounted and selected for non-overloading operation at all conditions. Close coupled pumps are not acceptable. Provide multiple-cell induced draft or forced draft cooling towers as applicable for water cooled chillers and in accordance with UFGS Section 15645A COOLING

TOWERS. Provide chilled water chemical bypass feeder and complete automatic condenser water treatment system. Provide accelerometers on all motors 20 kw (15 hp) and larger.

Chilled water and condenser water piping and accessories shall be provided in accordance with UFGS Section 15181A – CHILLED AND CONDENSER WATER PIPING AND ACCESSORIES. Piping shall be Type L copper or ASTM A 53 Schedule 40 black steel with threaded or welded joints. Ball valves shall be utilized for sizes up to 75 mm (3 in). Larger piping shall be equipped with plug valves. Butterfly valves are not acceptable. Piping supports shall be in accordance with MSS SP-59 and MSS SP-69. System shall include an air separator, expansion tank, chemical bypass feeder, makeup water connections, chemical treatment systems, and surge tank if volume is not adequate. Equip circulation pumps with strainers, check valve, balancing valve, flexible connections and isolation valves to permit maintenance. Pipe pump body pressure gauges arranged such that the pump differential pressure may be witnessed. Entire pump assembly shall be mounted on a structural steel frame equipped with housed spring vibration isolators with seismic snubbers.

Provide automatic water flow control valves at each coil and balancing valve in each loop of piping branch. If pumps are 11 kw (15 hp) or larger, then provide 2-way valves and VFD’s on the circulation pumps.

Arrange system to ensure minimum required flow through the chillers at all times. Each chiller shall have a dedicated primary chilled water pump. Distribution piping shall be designed as a reverse return system, with maximum water velocity of 1.2 m/s (4 fps). Piping shall be routed to provide the greatest accessibility for maintenance. Provide drain valves to allow complete system drainage and air vents at high points and coils. Air vent valves shall be installed to allow operation from 2.5 m (8 ft) above finish floor without the use of a stepladder. Chilled water piping shall be insulated and provided with a vapor barrier. Piping passing through hangers shall have rigid insulation shields.

6.5.19 Direct Digital Controls

6.5.19.1 General

(a) Direct Digital Controls (DDC) shall be used to control HVAC systems and equipment. The DDC controllers shall be a product of a manufacturer of existing systems at Robins AFB: Johnson Controls, Honeywell, or Invensys. All equipment provided shall be connected with all functions monitored and fully controlled through one of aforementioned base-wide systems. Building main control panel shall be connected to the base communication network via modem connection. Functionality shall be no different than if the operator was directly connected to the local communications network. Provide manual override for all digital and analog outputs, including but not limited to dampers and motors. Safety switches shall be provided for all control panels and other devices as necessary.

(b) Standalone equipment, such as boilers supplied with packaged controls, shall be installed with all necessary additional communications support equipment for interface with the base-wide DDC system.

(c) DDC system shall monitor and control all critical functions of each piece of equipment. Graphics package shall be developed with the standard controls system software to depict unit and system configurations, with real-time indication of conditions, and visual indication for parameters outside setpoint. Graphics package shall include a sequence of operation for each system. Indication shall include, but not be limited to, the following:

- On/Off status of all equipment
- Pump and fan status (monitored with control relays)
- Alarm status of all equipment
- Setpoints for packaged equipment (boilers, chillers, etc.)
- Heating coil entering and leaving air temperatures
- Cooling coil entering and leaving air temperatures
- Air handling unit mixed air temperature
- Heat wheel entering and leaving air temperatures
- Air handling unit filter differential pressure
- Air handling unit leaving air temperature
- Air handling unit smoke detector status
- Air handling unit damper position
- Room temperature and humidity (if controlled)
- Heating coil supply and return water temperatures
- Cooling coil supply and return water temperatures
- Exhaust fan status
- Airflow, for systems with airflow monitors
- Pressure drop across hangar exhaust filters/dust collectors
- Process ventilation fan on/off status and flow status
- Differential pressure between hangar and outside (pressure indication and alarm)
- Breathing air monitor status
- Compressed air system pressure
- DMSS system status
  - Recovery system On indication
  - Dirty media hopper level indication
  - Clean media hopper level indication
  - Blast pots filling indication
  - Blast pots pressure readout
- Utility meter (electric, gas, water) input

(d) Depaint Control Panel: Provide a control panel for the depaint hangar, located adjacent to the hangar bay. Control panel shall serve as the user interface to the DDC system for operating the depaint bay, and shall include the following:

- On/Off selector switch
- Heat/Ventilate/Cool (process cooling option) selector switch (this shall be a mode switch that will initiate the required setpoints and equipment start/stops for the process selected)
- On/Off status light
- Heat status light
- Cooling status light (process cooling option)
- System Safety status light
- System Alarm light
- Space temperature indication
- Space temperature setpoint
- Space static pressure indication
- Space supply airflow rate
- Space supply air temperature
- Space exhaust airflow rate

6.5.19.2 Controls System Specifications

The automatic temperature controls shall be designed in accordance with UFGS Section 15951 Direct Digital Control For HVAC. All control devices shall be labeled with laminated plastic tags using unique identifiers, which are cross referenced to the control drawings. Power source (panel and circuit number) for each DDC control panel shall be clearly and permanently indicated on the control panel and on the controls drawings. Provide training by an employee whose normal occupation with the company include DDC and controls system training.

6.5.19.3 Thermostats

Thermostats shall be single setpoint type with continuous display of temperature setpoint and room temperature. Maximum differential shall be 1 deg C (1.8 deg F). Caution shall be taken not to install thermostats in the center of a wall or location that would interfere with furniture placement, or on an exterior wall. Thermostat shall not be located in location subject to unrepresentative temperatures, such as locations opposite bathroom doors, laundry room doors, or exterior doors. Due to uncertainty of final systems furniture layout, coordinate location of thermostats with user during the design phase. Electrical rating shall not exceed 2.5 amperes at 30 volts ac. Housing shall be corrosion resistant metal or molded plastic.

6.5.20 Guide Specifications

The mechanical system design, submittal, and testing and balancing process shall conform to the latest edition of the Corps of Engineers Guide specifications. Refer to Section 01010 – GENERAL PROJECT DESCRIPTION AND DESIGN REQUIREMENTS for a list of proposed specification sections. Performance requirements may involve work not addressed in the guide specifications, and additional UFGS sections may be required during the design process.

7.0 ELECTRICAL TECHNICAL DESIGN CRITERIA

7.1 SUMMARY

Provide an electrical system, complete in place, tested and approved, as specified herein, and as required for a complete, proper, and efficient installation. The design and construction shall incorporate quality materials and promote energy conservation that will be of value to the Air Force in the foreseeable future. The requirements in this document are in addition to, and take precedence over, those required by the Base Facility Standards document.

7.2 DESCRIPTION

The electrical design shall coordinate with all other disciplines involved with the facility design and provide wiring for all equipment connections, extensions, and modifications needed, including, but not necessarily limited to all HVAC equipment, plumbing systems and equipment, lift stations, aircraft dock for stripping paint, administrative space, building support, production support, special support areas and aircraft ramp areas. As this facility will incorporate the most modern paint stripping technologies, the electrical designer shall become familiar with the process involved and provide all necessary power and communications requirements.

7.2.1 Aircraft Dock Area

The dock shall have an aircraft static grounding system, and electrical outlets including 120 volt, 1 phase, 3 wire 60 hertz receptacles, 208Y/120

volt, 3-phase, 4-wire receptacles, 480 volt, 3-phase, 4-wire, 60 hertz receptacles, and a 200Y/115 volt, 3-phase, 4-wire, 400 hertz disconnects. The dock will be equipped with a sliding hangar door connected to emergency power. Provide a key-operated switch on the exterior of the facility for control of power for the hangar doors. In addition, all electrical devices, boxes, fittings, and fixtures installed in the dock area shall be suitable and approved for the applicable hazardous area classification.

7.2.2 Building Support Areas

The building support areas shall include space for door tracks, walls, columns, aisles, airlocks, electrical equipment, communications equipment, and mechanical room space. These areas shall have HVAC, lighting, dropped ceiling, sprinkler system, compressed air, electrical receptacles (120V, 220V, 480V), emergency eyewash/shower, and sanitary waste floor drain.

7.2.3 Production Support Areas

The production support area shall consist of space for Dry Media Stripping System (DMSS) equipment, protective clothing, shop equipment repair, stripping equipment storage, and small parts stripping area.

7.2.4 Aircraft Ramp Areas

The facility shall include aircraft pavement to access the aircraft ramp; parking for vehicles including drainage and curbing, exterior lighting, relocation of equipment and utilities as necessary and connection to existing base utilities.

7.3 Site Conditions

This facility is phase I of a two-dock facility intended to strip the paint from C5 aircraft. Phase II will be the painting facility.

Before construction on this stripping facility can begin, a sanitary sewer lift station must be constructed in an appropriate location, the existing lift station demolished, Building 51 demolished, personnel from Hangar 55 must be relocated to new and remodeled areas of Hangar 44, Hangar 55 demolished, Building 60 demolished, and the 15 kV duct bank crossing the site must be rerouted.

Power for this stripping facility is available from one of the 12.47 kV circuits in the relocated duct bank. Copper and fiber optic communications services will be brought to this facility by others through an existing manhole in the far northwest area of the site.

7.4 QUALITY ASSURANCE

7.4.1 Design

7.4.1.1 General Design

Registered professional engineering services shall be required for electrical design and specifications preparation for this construction contract.

7.4.1.2 Communications

All voice and data communications design shall be performed by a Registered Communications Distribution Designer (RCDD).

7.4.2 Construction

7.4.2.1 Electrical Wiring

Only certified journeymen electricians or apprentices under the direct supervision of journeymen will be permitted to install, alter, or repair electrical systems.

7.4.2.2 Communications Wiring

The communications media (telephone cables, computer LAN cables, or fiber optic cables) shall be installed by Building Industry Consulting Service International (BICSI) registered cabling installation technicians.

7.4.2.3 Materials

All electrical equipment shall be new and shall be provided by the Contractor unless specifically indicated otherwise. Material and equipment shall be a standard product by a manufacturer regularly engaged in the manufacture of the product and shall be essentially duplicate items that have been in satisfactory use for at least 2 years prior to award of contract. All materials in the same category shall be by a single manufacturer (i.e. panelboards, switchgear, transformers, etc.)

7.4.2.4 Repair of Existing Structures

During construction, the Contractor shall be responsible for the repair of existing structures (to match existing) after installation or removal of electrical equipment required by design. This repair shall be done in a neat and workmanlike manner in accordance with local industry standards and acceptable to the Contracting Officer.

7.5 PERFORMANCE REQUIREMENTS

7.5.1 Basic Electrical Requirements

(a) All wiring, both indoor and outdoor, shall be designed in accordance with the applicable provisions of the latest edition of NFPA 70, Air Force (AF) regulations, and Robins AFB policies. Field verification of site location and electrical utility routing shall be made by the Contractor. Existing as-built drawings may be used as guidelines, but “information must be verified by field investigation”. The Designer shall be responsible for the verification of all dimensions, measurements, and location of existing facilities, utilities, equipment and other existing conditions that may affect the design. Existing electrical/ communications equipment and wiring (conductors and conduit) shall be rearranged or rerouted as required for the installation of the new facility. Only new medium voltage cables shall be utilized. Any medium voltage cables removed fro ducts shall be disposed of.

(b) Ensure adequate clear space around electrical equipment in accordance with the National Electric Code.

(c) A separate green grounding conductor shall be included in each feeder and branch circuit conduit to all electrical devices.

(d) Fire stops shall be provided at all locations where electrical equipment or systems penetrate fire-rated walls. Fire stops shall be rated equal to or greater than the wall penetrated.

(e) No more than three branch circuit phase conductors shall be contained in any branch circuit conduit and all shall be of different phases. Do not share neutrals.

(f) All wiring (including, but not limited to, power, fire alarm, telephone, intercom, communications, control, etc.) shall be in metal conduit, and all conduit shall be concealed above ceiling, under floor, or in walls, to the maximum extent possible.

(g) No exposed conduit or piping shall be permitted on exterior building surfaces.

(h) Penetrations into electrical equipment and devices located outside shall be made in the bottoms of enclosures, not the sides or tops. Provide weep holes at the low point of such conduit which will potentially accumulate water.

(i) Disconnects for mechanical and other equipment on the outside of buildings shall be mounted 457 mm (18 inches) above grade with the exception that the top shall not be higher than the top of the equipment.

(j) Four spare 21 mm (3/4 inch) conduits shall be stubbed from each recessed panelboard to above an accessible ceiling.

(k) Electrical service to the building shall be underground.

(l) RAFB has verified adequate capacity in circuits 3 and 5 to support the Paint and Depaint facilities.

(m) Electrical wiring shall meet ADA requirements for the following spaces: Restrooms, break room, and administrative areas, unless indicated otherwise.

(n) A 103 mm (4 inch) thick concrete housekeeping pad shall be provided and installed for all new floor-mounted electrical equipment unless noted otherwise. The concrete housekeeping pad shall have chamfered edges and extend 103 mm (4 inches) from face and sides of electrical equipment.

(o) Provide requirement of at least 25% spare spaces and capacity for all electrical equipment including transformers, motor control centers, switchboards and panelboards.

(p) Provide complete electrical support for all equipment and mechanical systems, HVAC, pumps, controls and dampers.

(q) Contractor shall provide temporary electrical service as part of design package. All temporary wiring shall be in accordance with NFPA 70. All temporary outlets shall be GFI protected.

(r) Locate electrical equipment to allow reasonable access for maintenance. Avoid locating equipment on roofs due to maintenance problems. Provisions shall be made for removal of equipment for maintenance. Assure that proper distance between system components and walls is maintained to ensure ability to clean, repair, or replace system components.

(s) Provide local disconnect switches for remote controlled equipment such as air handlers and exhaust fans.

(t) Contractor shall furnish instruction manuals and spare parts inventory requirements for each piece of electrical equipment. Contractor shall

also furnish necessary control diagrams in accordance with ETL 83-1. Two 711 mm x 1016 mm (28″ x 40″) mylar control drawings for each installation shall be furnished. One is to be mounted on a wall in a frame, under plexiglass in equipment rooms. The other is to be furnished to 778 CES/CECM to become part of the facility "as-built" drawings.

(u) Ensure that equipment items that require periodic maintenance and repair have sufficient manufacturer's identification data permanently affixed. Contractor shall provide copies of parts identification manuals and installation and maintenance instructions, customarily furnished with the equipment.

(v) Robins AFB utilizes the master keying system provided by the BEST Universal Lock Co. The designer shall clearly specify that only those cores that are compatible with the BEST master keying system shall be used. Locks shall be supplied with construction cores. Individual locks shall be provided for exterior electrical service equipment.

(w) The Contractor shall provide training for each electrical system (generators, electronic systems, etc.) installed.

(x) All excavations, trenches, and open manholes shall be properly shored, braced, barricaded, or guarded. Warning lights or other illumination maintained from sunset to sunup shall be placed at all excavations that are adjacent to pedestrian or vehicle thoroughfares. Adequate physical protection shall be provided at all remotely located excavations.

(y) Contractor personnel shall not enter manholes, tunnels, tanks, or confined spaces until such entry complies with the requirements of OSHA 1926.21(6)(i). Government personnel will not enter manholes, tunnels, tanks, or confined spaces until a confined space entry permit has been obtained from the WR-ALC Safety Office, Bio-Environmental Engineers, or the Base Fire Department.

(z) Construction Over Buried Utilities: New construction shall not be placed over existing buried water, sewer, heating, compressed air, electric, telephone utilities, except in extraordinary situations, and then only if special provision is made and agreed upon for maintenance access. In no case shall construction be placed over existing POL or natural gas lines.

(aa) Turn over all removed 15 kV switches and switchgear and all pad-mounted transformers to the Robins Air Force Base exterior electrical shop. Excess electrical equipment generated as a result of demolition work shall become the property of the Contractor unless stated elsewhere in this document and shall be removed from Robins Air Force Base.

(bb) In preparation for construction on this site an existing medium voltage duct bank must be relocated, Building 44 must be remodeled, Buildings 431, 51, 53 and 60 must be demolished, a sanitary sewer lift station must be relocated, and the lighting services associated with a portion of the apron and a parking lot must be removed. The new depaint facility shall include apron lighting to replace that removed during site preparation.

The relocated duct bank is anticipated to include six each, 127 mm (5 inch), concrete-encased ducts from existing Manhole 28H to a new manhole near Manhole 28H, to a new manhole between Manholes 28J and 28N with one intervening manhole.

Building 44 remodeling includes altering existing spaces and a building addition to accommodate personnel being relocated from Building 55.

Demolition of the existing facilities mentioned above includes the removal and delivery to the exterior electrical shop of the associated medium-voltage switches and all medium voltage primary transformers. All site lighting poles and fixtures being removed shall be disposed of per the directions of the Contracting Officer.

Any other electrical equipment or services not specifically identified here, but that will be affected by the new construction shall be either removed or relocated as appropriate.

(cc) All electrical equipment shown to be removed by Contractor shall include all associated hardware and raceway systems. The Contractor shall be responsible for all cutting and patching required for the performance of his work. No structural members shall be cut without the approval of the Contracting Officer. The Contractor shall be responsible for the repair of existing structures to match existing required for installation or removal of electrical elements shown on the drawings. This repair shall be done in a neat and workmanlike manner in accordance with local industry standards and acceptable to the Contracting Officer.

(dd) Electrical circuits disturbed during demolition shall be restored to their previous conditions.

(ee) Adjustable trip circuit breakers shall include adjustable long time, long time delay, short time, short time delay, instantaneous, ground fault and ground fault delay elements.

(ff) Note that this facility shall be fed by double ended unit substations per the Base Facility Standard. These double ended substations shall include load break, fused, medium voltage switches, less flammable or non flammable liquid filled transformers and outdoor walk-in secondary switchgear. Cable termination space in this switchgear shall have lockable, hinged doors. The transformers shall be rated for 55/65 C rise plus fans. The maximum permitted base transformer size shall be 2500 kVA. Note that the metering required by the Base Facility Standard is also to be provided. One spare feeder breaker of each size provided (minimum of two) shall be provided in the secondary switchgear, with appropriately sized conduit installed between the switchgear and the facility electrical room for future use.

7.5.2 Drawings

(a) Electrical system layouts shall be generally diagrammatic and unless specifically required, the location of outlets and equipment shall be approximate. The exact location of outlets, lighting fixtures, equipment and wiring shall be governed by structural conditions and obstructions, and shall be repositioned as required during construction at no additional cost to the Government. Where it is necessary for outlets or connections to be at specific locations, details shall be provided showing exact measurements. Coordinate all design so that interference between piping, architectural, and structural work shall be avoided.

(b) Drawings shall indicate the general routes of all branch circuits. All home runs shall be indicated as starting from nearest outlet and pointing in direction of panel as though their routes where shown in their entirety. All branch circuit home run conduits shall be run continuous to the branch circuit panel. The designer shall coordinate with reflected ceiling plans to ensure sufficient clearance for lighting fixtures.

(c) Riser and one-line diagrams shall show only vertical and electrical relationships and therefore need not include all required equipment,

devices, and accessories. Riser diagrams shall be required on all electrical services greater than 100 amps.

(d) Equipment interrupting capacities shall be shown on the contract documents based upon equipment characteristics and impedance values Of the equipment being installed. Interrupting capacities shall not be reduced to values less than those required by the design fault current calculations.

7.5.3 Raceways

(a) Conduit shall be Electrical Metallic Tubing (EMT), Galvanized Rigid Steel (GRS), Intermediate Metallic Conduit (IMC), Rigid Aluminum Conduit, Schedule 40 PVC, or Type DB PVC.

(b) Schedule 40 PVC conduit may only be used under slabs or underground, encased in concrete.

(c) Flexible metal conduit shall only be used for equipment connections (appliances, and motors only) in lengths not exceeding 2.0 meters (6.5 ft) and shall not be used for general wiring applications.

(d) All 400-hertz circuits shall be installed in rigid aluminum conduit when used above grade or PVC conduit when installed in contact with earth or embedded in concrete. Aluminum Conduit shall not be used in contact with earth or embedded in concrete.

(e) Exposed raceways shall be installed parallel or perpendicular to walls, structural members, or intersections of vertical planes and ceilings. Wiring above lay-in ceilings is considered exposed (as applied to wiring methods).

7.5.4 Wires and Cables

(a) All wire shall be copper.

(b) No metal-clad cable, (Type MC), shall be permitted.

(c) All branch circuits, lighting circuits, and feeder circuits shall be THWN/THHN. Wire shall be solid for #10 AWG and smaller and stranded for #8 AWG and larger (except stranded shall be used for luminaire connections). #14, 12, and 10 AWG conductors shall be twisted together before installing twist-on pressure connectors (wirenuts).

(d) Indoor wiring above 480 volts shall be in appropriately marked rigid steel conduit. In the hangar dock, all exposed conduit below 3.05 meters (10 feet) above the floor shall be rigid steel or IMC. EMT, RGS or IMC shall be used for all other raceway. All conduit/raceway shall be utilized/installed per the National Electrical Code.

(e) All medium voltage circuits shall be copper conductors, with XLPE insulation rated 133% with an anti-treeing agent and outer jacket, and separate 600 volt neutral and ground conductors.

(f) Underground secondary wiring shall be made of copper conductors at least as large as required by NEC, with thermoplastic insulation rated for 600V and 90 degree C temperature rating in wet locations. All ungrounded conductors, both the grounded conductor (if any) and the grounding conductor shall be installed in a concrete encased type "DB" conduit of at least the size required by NEC.

(g) Primary Loop Feeder: Medium voltage cables shall be copper, 15 kV, XLPE 133% insulation, with an anti-treeing agent and a PVC jacket (500 kcmil, a #4/0 , 600 volt neutral, and a #4/0, 600 volt ground conductor). Conductors shall be protected by a 129 mm (5 inch) diameter concrete encased type “DB” PVC conduit.

(h) Primary Radial Feeder: Medium voltage cables shall be copper, 15 kV, XLPE 133% insulation with an anti-treeing agent, with PVC jacket #2 or #4/0 AWG, and a #2 AWG or larger, 600 volt ground conductor). Conductors shall be protected by a 129 mm (5 inch) minimum diameter type “DB” PVC concrete encased conduit. Encased conduits shall have at least 76 mm (3 inches) of concrete protecting them on every side. Where two or more conduits share the same encasement, there shall be at least 38 mm (1 1/2 inches) of concrete between adjacent conduits at all points. The top of the encasement concrete shall be at least 762 mm (30 inches) below final grade level at all points.

(i) Medium Voltage Cable Terminations and Splices: All insulated coverings for terminations and splices shall be of the preformed type and physically held in place. Application of tape type covering for terminations or splices is prohibited.

7.5.5 Wiring Devices

(a) All cover plates for receptacles and switches shall be stainless steel in administrative areas and plated steel in industrial areas.

(b) All electrical devices shall be flush mounted except where noted otherwise and in mechanical rooms.

(c) Receptacle outlets shall be the same ampere rating as the breakers that feed them to prevent receptacle overload without breaker trip.

(d) An electrical outlet shall be provided adjacent to each pay phone outlet (exterior or interior) and each water cooler.

(e) A minimum of one 120 volt ground fault circuit interrupter outlet for maintenance purposes will be provided at each air handling unit.

(f) In support and administrative areas, provide a minimum of one general purpose, 120 volt, 20 ampere duplex receptacle per wall in each room. In rooms where walls exceed 2.44 meters (8 ft) in length, provide an additional duplex outlet for each additional 2.44 meters (8 ft) of wall or fraction thereof. Receptacles spacing shall not exceed 2.44 meters (8 ft). General purpose receptacles are in addition to special purpose and dedicated outlets for special equipment.

(g) Each LAN outlet shall be provided with an adjacent duplex receptacle on an independent single-phase (20 ampere, 120 volt) circuit having not more than four duplex receptacles and a nonshared neutral.

(h) Coordinate power and communications outlet locations with the furniture layouts.

(i) Provide five independent circuits for FAX and copy equipment and laser printers. Coordinate their locations with the users.

(j) Provide ground fault circuit interrupter receptacles in bathrooms and wet areas. Provide ground fault circuit interrupter receptacles on both sides of mirrors and between sinks in bathrooms. Exterior receptacles

shall be ground fault circuit interrupters and shall be rated for use with plugs inserted.

(k) All receptacles installed shall be of the grounding type.

7.5.6 Supports

(a) All conduit and boxes shall be securely fastened in place by means of clamps, clips, hangers, etc. designed for that purpose; No “Tie-wire” shall be permitted. Conduit and boxes shall be installed in a neat and workmanlike manner in accordance with local industry standards and acceptable to the Contracting Officer.

(b) Support conduits within 607 mm (24 inches) of each end of each bend, or each termination, and at intervals along the run that will maintain true raceway alignment without sag or deformation (maximum 3 meters (9.8 ft) on center). On exposed raceways, provide supports at a maximum of 2 meters (6.5 ft) on centers and on each side of each bend. Two hole straps shall be used on flat surfaces for conduit 27 mm (1 inch) and larger. Conduit shall not be supported by suspended ceiling or suspended ceiling support wires.

(c) All overhead electrical equipment, piping, cable trays, light fixtures and components shall be constructed and assembled to resist 0.5 times the equipment weight in any direction and 1.5 times the equipment weight in the downward direction at the center of gravity of the equipment.

7.5.7 Identification

(a) Color Coding: All conductors shall be color coded; colored tape may be used on conductors #6 AWG and larger at all manholes, handholes, terminations and junction boxes. A green equipment grounding conductor shall be installed in each branch circuit raceway. All circuit conductors shall be factory color coded as follows:

(1) 120 volt, 2-wire circuit: Grounded Neutral, White: Ungrounded Leg, Black.

(2) 240/120 volt, single-phase, 3-wire circuit: Grounded Neutral, White; 1 hot Leg, Black; 1 Hot leg; Red.

(3) 208Y/120 volt, 3-phase, 4-wire circuit: Grounded Neutral, White; Phase A, Black; Phase B, Red; Phase C, Blue.

(4) 240 volt, 3-phase, 3-wire circuit: Phase A, Black; Phase B, Red; Phase C, Blue.

(5) 240/120 volt, 3-phase, 4-wire systems SHALL NOT BE UTILIZED.

(6) 480/277 volt, 3-phase, 4-wire circuit: Grounded Neutral, Gray; Phase A, Brown; Phase B, Orange; Phase C, Yellow.

(7) 480 volt, 3-phase, 3-wire circuit: Phase A, Brown; Phase B, Orange; Phase C, Yellow.

(b) Major items of electrical equipment shall be permanently marked with an identification name to identify the equipment by type or function and specific unit number as indicated. Unless otherwise specified, all identification nameplates shall be made of laminated plastic with black outer layers and a white core. Edges shall be chamfered. Plates shall be fastened with black-finished round-head drive screws or approved non-

adhesive metal fasteners. The following equipment, as a minimum, shall be provided with identification nameplates: Panelboards, safety switches, transformers, switchgear, 200 ampere and larger feeder circuit breakers, and major electrical equipment and control devices. Letters shall be a minimum of 6.35 mm (1/4 inch) in height.

(c) Warning Tape: A 5-mil brightly colored plastic tape not less than 76 mm (3 inches) in width and suitably inscribed at not more than 3 meters (9.8 ft) on centers with a continuous metallic backing and a corrosion resistant 1-mil metallic foil core to permit easy location of duct line, shall be placed approximately 300 mm (12 inches) below finished grade directly above underground conduit runs.

(d) Underground high voltage conduits shall be identified by a 102 mm (4 inches) wide, red plastic marker tape with the words "Danger - Buried High Voltage Cable" placed directly over underground high voltage ducts. Marker shall be no more than 150 mm (6 inches) below finished grade. Marker tape shall include a continuous metallic backing and a corrosion-resistant 1-mil metallic foil core to permit easy location of duct lines.

(e) All outlet backboxes shall be labeled with the voltage and circuit number per AFOSH requirements.

7.5.8 Grounding

(a) Provide all grounding systems in accordance with NFPA 70 and AFI 32-1065.

(b) Provide aircraft static grounding system in hangar bay dock area. Grounding outlets shall be on a 10 meter (32 ft) grid in the aircraft dock area. The static grounding system shall be interconnected with the grounding system counterpoise.

(c) The grounding system counterpoise shall include a #4/0 AWG minimum sized, copper cable interconnecting the associated grounding rods and completely encircling the building.

(d) A minimum of every other perimeter building column shall be connected to the counterpoise system with the average interval not exceeding 20 meters (65 ft).

(e) All underground and concealed connections shall be welded.

7.5.9 Transformers

(a) Low-voltage transformers shall have Class 220 insulation systems rated for 80 or 115 degree C temperature rise.

(b) ETL 1110-3-412, “Transformer Application Guide”, will be used in the selection and application of transformers and dielectrics. For those areas with high nonlinear load, ”K” factor rated transformers are required. Provide a schedule identifying the “K” factor rating for each area.

7.5.10 Panelboards

(a) Panelboard directories shall be typewritten, to indicate loads served by each circuit and be mounted in a holder behind a clear protective covering when a new panelboard is installed or an existing panelboard is altered.

(b) All panelboards shall have copper buses.

(c) Panelboards shall have main circuit breakers with appropriate circuit breakers for branch circuits. All breakers shall be the bolt in type.

(d) A grounding bus, separate from the neutral bus, shall be provided in all panelboards.

(e) All panelboards serving computer equipment or dedicated electronics loads shall be provided with integral Transient Voltage Surge Suppressors.

7.5.11 Nonlinear Loads

(a) In all areas where nonlinear load type equipment predominates, motors with variable speed drives, electronic ballasts and dimmers and other similar loads, ETL 1110-3-403, "Electrical Power Systems for Nonlinear Loads," dated 30 June 1989; IEEE Std 1100 "Powering and Grounding Sensitive Electronic Equipment", and IEEE Std. 519, "Practices and Requirements for Harmonic Control in Electrical Power Systems" shall be used as design guides.

(b) K-rated transformers shall be used to serve nonlinear loads. Ratings will be based upon type of load served. Panelboards serving nonlinear loads shall have double-rated neutral buses. Motors connected to the same power source as nonlinear loads shall also be upgraded in size similarly. True RMS sensing meters, relays, and circuit breaker trip elements shall be used with nonlinear loads.

(c) Run oversized neutral conductors from the step down transformer to the service panelboard. The neutral ampacity shall be 1.75 times the phase conductor ampacity, or shall have a separate neutral conductor for each phase conductor.

(d) Branch circuits feeding receptacle outlets shall not share neutrals. Where homeruns are grouped together, provide three hot conductors, three neutral conductors, one ground conductor and one isolated ground conductor. Neutral conductors shall be considered as current carrying conductors. When grouping home runs, conductor sizes shall be adjusted in accordance with NEC due to number of current carrying conductors.

(e) The use of 75 or 90 degree C (minimum) terminals and insulated conductors is required. The basic rule of the UL Electrical Construction Materials Directory states that in general “the termination provisions are based on the use of 60 degree C ampacities for wire sizes N#14-1 AWG, and 75 degree C ampacities for wire sizes #1/0 AWG and larger, as specified in Table 310-16 of the NFPA 70.” Higher rated conductors than specified may be used if the size is based upon the previous statements.

7.5.12 Motor and Controllers

(a) Power factor correcting capacitors shall be connected on the load side of the motor controller for all motors 37.5 kW (50 hp) or larger.

(b) Provide phase reversal and phase loss relays for all motors, 37.5 kW (50 hp) or larger.

(c) Provide accelerometers on all motors 15 kW (20 hp) and larger.

(d) Provide soft start controllers or variable speed drives for all motors 37.5 kW (50 hp) and larger.

(e) Locate all variable speed drives (VSD) in the electrical room. Provide the necessary filter devices to prevent motor damage for motors located more than 30 meters (100 ft) from the VSD.

7.5.13 Electrical Service and Distribution

(a) Two 12.47 kV circuits are currently routed through Manhole 28H, located near the northeast corner of Building 47. Circuit 5 dead ends at the 4-way switch serving Building 55 while Circuit 3 goes on through this site to serve loads farther north on the base. Circuit 5, with roughly 5 MVA of available capacity, is anticipated to be used to serve this new depaint facility. After the duct bank has been rerouted as previously stated, two new 4-way switches shall be installed near the new “center” manhole. The transformers serving the double ended substation switchgear shall each be fed from a different 4-way switch such that the failure of any one switch or cable will not completely de-energize the substation.

(b) Extensions of the base 12,470 volt underground power distribution loop shall be made with 500 kcmil, 15 kV copper phase conductors, with XLPE insulation rated 133% and an anti-treeing agent and outer jacket, and a #4/0 AWG, 600 volt neutral and a #4/0, 600 volt ground conductor. Conductors between the new 4-way switches and the substation transformers shall be #2 or #4/0 AWG of the same construction as the main loop conductors with a #2 AWG ground conductor.

(c) Only modular terminations and connectors shall be used with primary cables.

(d) The new facility shall be provided with digital KW/KWH/KWD/PF/Amp meters. Metering systems shall incorporate 120 volt secondary PTs. Meters shall all be checked and calibrated under load by qualified meter technicians. Meters, instrument transformers and all other utility systems shall be 100% compatible for monitoring via the existing base SCADA system. All metering shall be in accordance with ETL 94-2.

(e) All switchgear shall include power monitoring capability similar to Square D Power Logic on each feeder breaker on the main switchgear. All Equipment, fixtures and materials shall be UL listed and be suitable for use in the application of service.

(f) Medium voltage air switches shall be used in lieu of oil insulated switches.

(g) Install conductors from the new double-ended substation to the new facility with no splices. All equipment and wiring shall use copper conductors. Secondary switchgear with circuit breakers to feed equipment or panelboards shall be provided in the electrical room.

(h) All utility road and driveway crossings shall be bored and sleeved with single schedule 80 PVC or 6.35 mm (1/4 inch) wall steel sleeves. Roads and driveways shall not be crossed by open cut unless approved. Wherever boring is impractical, street crossings shall be limited to 3 days maximum for any utility crossing roadway (including trenching, compaction, and replacement of existing pavements). Contractor shall provide steel matting sufficient to carry traffic loading over excavated area.

(i) Manholes/handholes - All electrical concrete manholes, handholes and pull boxes shall be of the precast type.

(j) For individual loads greater than 200 horsepower/200 kVA, 4160 volt electrical service may be utilized.

7.5.14 Lighting System

7.5.14.1 General Lighting

(a) Lighting shall be designed in accordance with the most current ETL concerning electrical energy conservation.

(b) Lay-in Light fixtures shall be individually served from an individual junction box directly over light fixture with 10 mm (3/8 inch) flexible metal conduit at least 1219 mm (48 inch) but not exceeding 1828 mm (72 inch) in length.

(c) Interior lighting shall be industrial fluorescent in building support and production support areas; commercial fluorescent in administrative, special support and corridors; and pulse-start metal halide fixtures in the aircraft dock. Provide switching other than panelboards for all areas. Recessed lay-in type fluorescent light fixtures shall be provided in all ceilings with suspended metal grid. Lighting for general office areas, classrooms, corridors, conference rooms, and lobbies shall be provided by 609 mm x 1219 mm (24″ x 48″) recessed fluorescent fixtures. 609 mm x 609 mm (24″ x 24″) fluorescent fixtures are not permitted.

(d) Lay-In fluorescent light fixtures shall be securely fastened to ceiling framing members by mechanical means (four clips per fixture). All recessed light fixtures or other electrical devices shall be supported independently of lay-in ceiling tile by means of bar hangers or other structural means. Surface-mounted fixtures shall be securely fastened to ceiling supporting structure. No toggle bolts in gypsum board or plaster shall be permitted.

(e) Lighting system shall incorporate the latest techniques of energy savings applied to lighting systems. For energy efficient interior lighting schemes, lighting systems shall be designed to allow reduction of lighting levels by appropriately banking lighting circuits or providing separate switching of inner and outer lamps in three or four tube fluorescent fixtures. Consideration should also be given for any task lighting that could possibly reduce the overhead lighting requirements.

(f) General illumination levels shall not exceed the intensities shown in Military Handbook 1190 dated 1 September 87. Office and console areas shall have a comfort probability (VCP) of greater than 70.

(g) All fixed lighting shall be installed using 277 volts.

(h) Compact fluorescent lamps shall be used in place of incandescent lamps. Incandescent lamps shall not be permitted.

(i) Lighting requirements are maintained performance requirements. The contractor shall utilize software to estimate maintained lighting levels which meet the criteria. The software shall also report initial lighting levels. The initial lighting levels will be tested during the acceptance test period. Additional lighting shall be provided should the initial values be less than those calculated initial values.

(j) The following are the limits to be used for lighting level calculations:

	Metal-Halide	Pulse-Start	High Pressure	Fluor-escent

	(MH)	MH	Sodium	
Total light loss factor(max)	.65	.70	.70	.80
Hangar floor reflectance(max)	.10	.10	.10	.10
Other area floor reflectances(max)	.20	.20	.20	.20

7.5.14.2 Interior Lighting

(a) Fluorescent fixtures shall use T-8 lamps, electronic ballast with high power factor (greater than .9) and low harmonic distortion (less than 10%). Emergency lighting in areas with recessed fluorescent lighting shall be connected to the emergency power system. In administrative areas, parabolic fixtures shall be used to the maximum extent possible. Acrylic Prismatic lenses shall be a minimum 4mm thick. Polystyrene lenses shall not be permitted.

(b) Exit Lights - All exit lights shall be of the diffused L.E.D. type with Red Lettering. Exit lighting shall include battery backup and be unswitched.

7.5.14.3 Aircraft Dock Lighting

(a) General horizontal lighting level shall be a maintained minimum of 807 Lux at one meter (3.2 ft) above the floor.

(b) Maximum to minimum lighting levels within the space shall not exceed a 2:1 ratio. Submit design calculations to verify the maximum to minimum ratio.

(c) Vertical illuminance on the fuselage of the aircraft shall be a maintained minimum of 538 Lux.

*8

(d) Equipment: Sufficient portable lighting equipment shall be furnished to add 538 Lux to 25% of the underside of the wings and fuselage at any time. Note that this equipment must be rated for Class II, Division 2, Group G hazardous locations. Also provide sufficient lighting equipment on ~~each teleplatform and~~ tailstand to add 300 lux to the vertical and horizontal surfaces being worked on from that platform or tailstand.

(e) The preferred method for fixture lamp replacement is from outside of the hazardous area.

(f) Provide lighting in all equipment and fixture access spaces.

7.5.14.4 Emergency Lighting

(a) Emergency lighting shall be provided in accordance with NFPA 101 and ETL 99-4. Individual unit equipment for emergency illumination shall be circuited to comply with NFPA 70, Article 700-12(e).

(b) Emergency egress lighting shall be connected to the emergency generator.

(c) At least a portion of the light fixtures in each room shall be served by the emergency generator to provide emergency egress from the space.

7.5.14.5 Exterior Lighting

(a) Provide photocell controlled exterior lighting, consisting of high-pressure sodium lamp type fixtures. Light fixtures shall have electronic, high efficiency ballasts and energy saving lamps.

(b) Sidewalk lighting shall be accomplished using wall mounted metal-halide luminaries.

(c) Roadway lighting Poles shall be 9.2 meters (30 ft) aluminum with 1.5 meter (5 ft) davit arm for all roadway lights. All power and light poles, steel support structures, and their foundations shall be rated for a 44.7 meters/second (100 mph) wind load.

(d) Apron Lighting: Provide a sufficient number of light fixtures, mounted a minimum of 24 meters (80 ft) above the hangar floor, mounted across the east face of the hangar, to maintain the apron at 20 lux, from the face of the hangar to 35 meters (115 ft) east of the hangar for 1-1/2 times the full width of the hangar. The fixture aiming point shall not be less than 45 degrees below horizontal.

7.5.15 Emergency Generator

*8

(a) Provide emergency generator power for egress lighting, fire alarm system, hangar doors and all eight future teleplatforms. A minimum of 10% of the fixed aircraft dock lighting shall be served by the generator. These fixtures shall include the quartz restrike feature with 300 watt minimum quartz lamps.

(b) If a lead-acid battery is required, specify the lead-calcium type, rather than lead-antimony, to provide increased service life, decreased hydrogen gas production (venting may not be required), and decreased routine maintenance (water make up).

(c) Provide manual bypass switching around automatic transfer switches.

(d) Provide suitable enclosure for new fixed emergency generator installations. Color shall match existing architectural theme in surrounding area.

(e) Electrical transfer switch and control installations shall be located in the electrical room.

(f) The on-site, generator fuel supply shall be sufficient to operate the generator at full load, for a minimum of 72 hours.

7.5.16 Structured Cabling Systems

(a) Voice and data communications systems shall be designed in accordance with TIA/EIA-568-A, TIA/EIA-569, TIA/EIA 606, TIA/EIA 607, MIL-HDBK-1012/3 and NFPA 70.

(b) Voice and data communications service: This contract shall provide 4 dedicated, empty 103 mm (4 inch) conduits, from the communications room to Manhole 18L, located west of Building 43. Provide 4-cell innerduct in one of the new conduits.

*(6)

(c) Provide a wall-mounted , 19 mm (3/4 inch) plywood backboard for copper cable terminations. Extend Category 6 cables from the backboard to all workstations. Contractor shall terminate all cables provided.

(d) Communications closets shall be a minimum of 2134 x 3048 x 2438 mm high (7′ x 10′ x 8′ high) with a 2438 x 2438 x 19 mm thick (8′ x 8′ x 3/4″ thick) plywood backboard securely attached to one wall. As a minimum provide two each 110 volt ac, 20 amp, duplex outlets with surge suppression with 152 mm (4 inch) separation. Telephone backboards shall be installed 600 mm (24 inches) off the ground above the service entrance

conduits. The backboard shall be mounted horizontally with 1219 mm (48”) side parallel to the ground.

(e) Administrative areas will need general outlets and power for personal computers. All areas will require telephone outlets. Each workstation will required at least one triple connection combination one Voice/two Data outlet. Additional outlets will be required as directed by the using activity. Category 6 wiring shall not exceed 90 meters in length in accordance with EIA/TIA standards.

(f) Provisions for voice and data communication systems shall consist of providing a complete wiring and pathway system, including all conduits, connectors, cross connects, terminations, racks, grounding system, and all other items necessary for a complete and usable system. Building shall be pre-wired with Category 6, UTP (4 pair) wire in EMT conduit to each workstation or outlet. Minimum size conduit shall be 21 mm (3/4 inch) for voice circuits and 27 mm (1 inch) for data. Pre-wire all locations complete from outlet back to the communication closet.

7.5.17 Public Address Systems

(a) Provide a standalone public address system including Break/Clock/Shift bells to cover the new facility.

(b) Provide a Public Address Master Station in Office area.

(c) Public address system shall include direct communications between the hangar bay dock area and the adjacent control booth. Provide hands free talk back capability for this location.

(d) Provide a uniform 85 dB in the hangar.

7.5.18 Lightning Protection

(a) Provide an EASE protection system per the included base specification Section 16671.

7.5.19 Hazardous Locations

(a) Design drawings shall clearly show all hazardous locations, and identify each by Class, Division, Group, and Operating Temperature. This contractor shall evaluate this facility to determine the appropriate area classification for all spaces not already classified in this document.

(b) All hazardous areas shall be documented in accordance with NFPA 70, article 516 and with NFPA 33.

(c) The dock area shall be a Class II, Division 2, Group G hazardous area. All electrical wiring and equipment installed in dock area shall be UL listed and approved for use in Class II, Division 2, Group G areas.

(d) Dock area electrical receptacles shall include:

- 20 ampere, 120 volt, single-phase outlets on 6 m (20 ft) centers on nonplenum walls, each with a dedicated circuit breaker.
- 100 ampere, 208 volt, three-phase, four-wire, plus ground outlets on 9 m (30 ft) centers on nonplenum walls, each with a dedicated circuit breaker.
- Three each 100 ampere, 480 volt, three-phase, four-wire plus ground outlets, each with a dedicated circuit breaker, equally spaced on each side of the hangar (total six per hangar).

- Two each, 200 ampere, 480 volt, three-phase, four-wire, plus ground outlets, each with a dedicated circuit breaker, one located on each side of the hangar, midway between the arecraft's nose landing gear and the main landing gear, for connection of GFGI hydraulic units. Coordinate the outlet pin configuration with the government.

*8
(e) Deleted~~Each teleplatform shall include two each, 20 ampere, 120 volt, single-phase outlets with dedicated circuit breakers~~.

(f) All three-phase outlets shall be served through a contactor/disconnect. The receptacles themselves shall include control wiring pins to disconnect power before the main contacts part.

7.5.20 Special Systems

7.5.20.1 Teleplatforms

*8
(a) Provide all power and control requirements for ~~teleplatforms and~~ tailstands located in the Hangar Bay dock area. Refer to paragraph 6.2.3 for teleplatform requirements. Provide spare circuit breakers to serve ~~additional~~ all future teleplatforms as required for total coverage of the C-5 aircraft.

*8
(b) Deleted~~Install "Snap Track" (Not Festoon) Cable System to teleplatforms~~.

7.5.20.2 400 Hertz Source (Equipment Item)

(a) Provide a 90 kVA solid-state frequency converter for 60 to 400 hertz conversion in the electrical room.

(b) Provide a suitable 208Y/120 volt, three-phase, four-wire plus ground outlet on the wall nearest the aircraft's nose wheel to provide 400 hertz power to the aircraft. Provide a means, at the aircraft serving receptacle, to start and stop the converter.

(c) Provide an adequately sized cable, both capacity and length, with appropriate connectors for the outlet and aircraft ends. Furnish a wall-mounted cable rack for storage of the cable when it is not in use.

7.5.20.3 Alarm Annunciation Devices

Provide unique colored and sounding alarm annunciating devices for each different alarm system provided in the facility such as fire alarm, hangar door moving, off spec breathing air, off spec exhaust/recirculating air, etc. See table below for list of alarms.

Depaint Hangar
Alarms

	Systems			Indication	
	DMSS	SA Fans	EA Fans	Visual (Note 3)	Audible
Fire Alarm	-	OFF	OFF	Red	X
Hangar Door Operation	OFF	Note 1	Note 1	Yellow	X
BA System					
High CO / Low O2	OFF	ON	ON	Blue	X
Low Pressure	OFF	ON	ON	Blue	X

DMSS in Progress				Note 5	
Hangar Bay					
High LEL/PEL	OFF	ON	ON	Green Note 4	X
Low Airflow	OFF	ON	ON	Green Note 4	X
High space press.	OFF	OFF	OFF	Note 2	
High exhaust filter dP	OFF	OFF	OFF	Note 2	

Notes:

1. SA and EF fans shall maintain current speed and mode of operation.
2. Indication at the hangar control panel.
3. Visual indication shall be visible to all workers in the hangar bay. Coordinate light colors with Robins AFB.
4. Indication at hangar control panel and in the aircraft hangar bay.
5. Flashing Yellow outside each entry door into the aircraft dock.

7.5.21 Energy Conservation

(a) The electrical design shall coordinate with mechanical and provide connections for all energy conservation and / or monitoring systems outlined in Section 6.0, Mechanical Technical Design Criteria.

(b) In addition to requirements in Section 6.0, the lift stations shall have control panels at the site but shall also send signals via radio transceivers to the base monitoring location. Contractor shall be responsible for coordinating the transceiving equipment with the existing base receiving equipment and for programming modifications required to monitor and control the lift stations from the existing location. Transmitting and receiving frequencies for the lift stations shall be:

TRANS	REC
M941.49375	M932.49375
M941.48125	M932.48125

7.5.22 Outages

(a) Outages to tie into existing utilities, and all construction work must be accomplished in such a manner as to minimize the impact to existing base operations. Any utilities or equipment that need to be relocated to construct the facility shall be accomplished in such a manner as to minimize the impact on the existing base operations.

(b) Utility Outages and Road Closings: Unless otherwise specified, all utility outages shall be accomplished between 1800 Friday and 0600 Monday. All outages shall be coordinated in writing through the Contracting Officer with written approval from 778 CES/CECM, Construction Management Section.

8.0 CATHODIC PROTECTION

(a) Engineering and design of Cathodic Protection and coatings are required as indicated in accordance with ETL 1110-3-474, included as part of this RFP document.

(b) General soil conditions at Robins AFB are very conducive to corrosion of underground metal structures. The soil varies from sandy silt to sandy clay with areas of stratification of the various types. Soil resistivity varies from a high of 26,100 ohm-cm to a low of 529 ohm-cm. There is no soil resistivity data available at the base. Designer shall take readings at the locations of structures and paths of utilities being cathodically protected. Design analysis shall contain a map showing the sites of such readings, type of instrument used, and a table containing location designation and soil resistivity. Cathodic protection design shall be a complete design and not a performance specification. Guidance for the installation and/or use of corrosion mitigation equipment and procedures is provided in AFM 88-45, Civil Engineering Corrosion Control - Cathodic Protection. All metals installed underground or in contact with the ground at Robins AFB shall have cathodic protection for control of corrosion.

(c) Cathodic protection and protective coatings shall be provided for but not necessarily limited to the following buried or submerged ferrous metallic structures regardless of soil or water resistivity:

(1) Natural gas and propane piping.
(2) Liquid fuel piping.
(3) Underground storage tanks.
(4) Fire protection piping.
(5) Ductile or cast iron pressurized piping under floor (slab on grade) in soil.
(6) Underground heat distribution and chilled water piping in ferrous metallic conduit in soils with resistivity of 30,000 ohm-cm or less.
(7) Other structures with hazardous products.
(8) Steel casing for underground hydraulic elevator jack.
(9) Oxygen piping.

(d) Cathodic protection for buried metallic structures shall be designed in accordance with ETL 91-6.

(e) Protective Coatings: Coating specifications for above and below ground high value metallic structures shall be prepared in accordance with the guide specifications shown in AFM 85-3, Paints and Protective Coatings, (revised 1982). Underground piping systems shall conform to either FS-L-C-530, Type II (except tape and primer conform to AWWAC203) for epoxy or for continuously extruded polyethylene, FS-L-C-530, Type I (Federal Specifications). On all metallic structures where the surface is blasted to white or near white finish, no blasted surface shall be left unprimed beyond the normal workday. Coatings specified for underground or submerged use shall be those specifically designed for those types of environmental conditions. Under no circumstances shall thin plastic film tapes, such as electrical tape, be used to coat underground structures or wiring. Reference NACE Standard RP-01-69 for coating information.

(f) All ferrous underground piping shall be cathodically protected using a sacrificial anode system. The system shall be designed for a minimum life of 20 years.

(g) All piping that has a cathodic protection system shall have a cathodic protection coating with at least 90% coverage efficiency.

(h) The coating system shall consist of 1 of the following coatings:

(1) Coal Tar Coating: This shall consist of a coal tar primer, an outer wrap of non woven, thick, glass fiber mat that has been impregnated with coal tar enamel (thickness not less than 0.76 mm (30 mils)), and

a polyethylene Kraft paper wrap (thickness not less than 0.10 mm (4 mils)). This shall be installed on the metallic pipe in accordance to the procedure called out in ANSI/AWWA C203.

(2) Epoxy Coating System: Coating system shall conform to FS L-C-530, Part II. Fittings, valves, and joints shall be factory-coated with materials identical to those used on the pipe, or may be field-coated with a 2-part epoxy system recommended by the manufacturer of the pipe coating system. Field protection may also be provided for joints and fittings with a tar tape hot applied over a compatible primer.

(3) Thermoplastic Resin Coating System: Coating system shall conform to FS L-C-530, Part (3). Exterior of piping shall be cleaned to a commercial grade blast cleaning finish in accordance with SSPC CP 6. Adhesive compound shall be applied to pipe. Immediately after adhesion is applied, a seamless tube of polyethylene shall be extruded over the adhesive to produce a bonded seamless coating. Normal thickness of pipe coating system shall be 0.25 mm (10 mils) (plus or minus 10 percent) of adhesive and 40 mils (plus or minus 10 percent) of polyethylene. Joint coating and field repair material shall be applied as recommended by coating manufacturer and shall be 1 of the following:

- Heat shrinkable polyethylene sleeves.
- Polyvinyl chloride pressure-sensitive adhesive tape.
- High-density/bituminous rubber compound tape.

(i) Coating system shall be inspected for holes, void, cracks, and other damage during installation. Testing shall be performed using a holiday tester set to the appropriate voltage as recommended by the coating manufacturer.

(j) All pre-design surveys, cathodic protection designs, and acceptance surveys and testing shall be performed by a person that is accredited or certified as a "Corrosion Specialist" by the National Association of Corrosion Engineers (NACE) as a NACE Accredited Corrosion Specialist or a NACE certified CP Specialist or be a registered professional engineer who has certification or licensing that includes education and experience in corrosion control of buried or submerged metallic piping and tank systems. Any certifications shall verify that designer has had experience in cathodic protection design, installation and testing as per ETL 91-6All.

9.0 FIRE PROTECTION

(a) All fire detection/fire protection and fire alarm system designs shall be performed by a qualified Fire Protection Engineer in accordance with ETL 02-15 and MIL HDBK 1008-C. As required by ETL 02-15, use standard design details available from AFCESA.

(b) The building shall be protected with a fire detection/fire protection and alarm system installed in accordance with NFPA 72. Fire detection and alarm systems shall be designed in accordance with EGL 92-2, AFR 127-100, MIL-HDBK-1008, ETL 02-15, NFPA 72, NFPA 20, NFPA 33, and other applicable NFPA Standards and Codes.

(c) Provide a complete 4-wire supervised system. The complete fire alarm system shall meet requirements of NFPA 72, Table 3-9.1, Style 6 and Table

3-10.1, Style Z. The fire alarm control panel shall be addressable and have a class "A" supervised fire alarm circuit that provides a trouble signal and continues to operate as an alarm circuit after one fault has occurred in the wiring. Provide a graphic annunciator. All fire alarm controls shall be located in a single fire alarm control panel.

Provice a minimum of three separate initiation circuits from the fire alarm control panel (FACP). Each initiation circuit shall have a separatae isolator module for short circuit isolation. The circuits shall the hangar dock, the northwest support area, and the southwest support area.

(d) All devices shall be addressable and comply with NFPA requirements and EGL 92-2, Paragraph 15-76.

(e) In the aircraft dock area, addressable modules shall be utilized on all devices that are not readily available rated for the hazardous location. Locate the addressable module within one foot of the device. Intrinsically safe wiring shall not be utilized on the fire alarm system.

(f) Annunciation circuits shall be connected directly to the fire alarm control panel (FACP) notification terminals. The audio/visual devices shall not be connected to the Style 6 initiation loop.

(g) Notification of evacuation of personnel shall be by both audible and visual alarms per EGL 92-2. All rooms except private offices shall have at least 1 visual fire alarm. The system shall have tamper switches on all valves that would disable the sprinkler system, and shall transmit system trouble, supervisory trouble and alarms to the Base Fire Department. Upon the detection of flow of water in sprinkler lines, a water gong shall sound and the fire alarm panel shall signal an alarm.

(h) All alarm, supervisory signals and trouble signals shall be transmitted by a transceiver compatible with Monaco Radio Fire Alarm System "D700," currently in use on Robins AFB. Contractor shall provide a transceiver compatible with Monaco BT-2-8, 16 Zone set to frequency 165.1375 MHz. All equipment necessary to interface with the transceiver and transmit fire alarms, supervisory signals and trouble signals to the Base Fire Department, including cable, brackets, antennas, etc., shall be 100% compatible with the existing Monaco system. Integral fire alarm control panel and radio transmitters shall not be provided.

(i) The control panel shall have a dry set of contacts for each trouble and fire alarm and shall be 100% compatible with the existing Monaco system. Written certifications from manufacturers other than Monaco shall be required stating they meet this criteria. Specify drawings and schematics of fire alarm panels, recommended spare parts list, and special tools/test equipment are required.

(j) The fire alarm panel, transmitter or transceiver, associated antenna, lightning arrestor, and cable shall be located in equipment rooms and easily accessible by the Base Fire Department. A remote graphic annunciator shall be installed at the facility entrance as directed by the Base Fire Department.

(k) Include smoke detectors in air handling units to comply with NFPA 90A and all air handling units that deliver more than 944 L/s (2,000 cfm). Interlock all required HVAC fans and equipment with the fire alarm system panel. All fans (supply and exhaust) within a zone shall de-energize when notified by the fire alarm panel that an alarm conditions exists in that zone.

(l) Manual pull stations for evacuation of personnel and transmission of fire alarms to the Base Fire Department will be located at each exit and spaced to meet NFPA requirements.

(m) All fire alarm system acceptance tests shall be performed in the presence of the Base Fire Department, to demonstrate operation of all newly installed or relocated fire alarm devices.

*(6)
(n) Deleted.

(o) The strip bay shall be classified as Class II, Division 2 hazardous areas in accordance with NFPA 70.

9.1 Fire Suppression System

Automatic wet pipe sprinkler protection shall be provided for this facility. The requirements indicated below shall be incorporated into the design-build process.

9.1.1 Qualifications of Fire Protection Engineer

The design of the fire protection features shall be by a qualified fire protection engineer meeting one of the following conditions: a.) An engineer with a Bachelor of Science or Masters of Science Degree in fire protection engineering from an accredited university engineering program, plus a minimum of 5 years' work experience in fire protection engineering. b.) A registered professional engineer who has passed the National Council of Examiners for Engineering and Surveys (NCEE) fire protection engineering written examination. c.) A registered P.E. in a related engineering discipline with a minimum of 5 years' experience dedicated to fire protection engineering.

9.1.2 Sprinkler System

(a) The facility shall be fully protected with automatic wet pipe sprinkler systems. All floors and all areas of the facility shall be protected. The sprinkler system designs shall be in accordance with MIL-HDBK-1008C, ETL 02-15, NFPA 13, Factory Mutual (FM), UL, UBC, and UFGS Specification Section 13930 - WET PIPE SPRINKLER SYSTEM. The sprinkler hazard classifications shall be in accordance with MIL-HDBK-1008C, ETL 02-15, and NFPA 13. Design densities, design areas and exterior hose streams shall be in accordance with ETL 02-15 and MIL-HDBK-1008C. The de-paint strip bay shall be protected with a wet pipe sprinkler system as required by ETL 02-15 for hangars used exclusively for unfueled aircraft. The sprinkler systems shall be designed and all piping sized with computer generated hydraulic calculations in the HASS format (by HRS Systems, Atlanta, GA). The exterior hose stream demand shall be included in the hydraulic calculations. A complete sprinkler system, including sprinklers, branch lines, floor mains and risers, shall be shown on the drawings.

(b) The Contractor shall edit UFGS Specification Section 13930 - WET PIPE SPRINKLER SYSTEM, for this project. This shall be submitted for review with the preliminary and final design submittals. These specifications shall be followed for the design and installation of the sprinkler systems.

(c) The Contractor shall submit material data, hydraulic calculations, and shop drawings as required by Specification Section 13930 to the Contracting Officer for review and approval.

9.1.3 Exterior Hose Stream

Exterior hose stream demand shall be in accordance with ETL 02-15.

9.1.4 Backflow Preventer

A double check valve assembly backflow preventer shall be provided on the fire water main serving the building. This shall be located within the building. An exterior wall hydrant with OS&Y valve shall be provided to allow testing of backflow preventer at design flow as required by NFPA 13. Ensure wall hydrant for backflow preventer is identified differently than the sprinkler system FD connection.

9.1.5 Fire Department Connection

A bronze, Siamese fire department connection with check valve shall be provided as required, located to be directly accessible to the fire department. The fire department connection shall be equipped with an NFPA standard thread for 65 mm (2 1/2-inch) hose connection.

9.1.6 Fire Pumps

Fire pumps shall be provided (if required) in accordance with ETL 02-15 and NFPA 20. Pumps shall be electric drive. Pump and installation shall be in accordance with UFGS Specification SECTION 13920.

9.1.7 System Components and Hardware

(a) Materials for the sprinkler system and fire pump system shall be in accordance with UFGS Specification SECTIONS 13920 and 13930, NFPA 13, and ETL 02-15. Sprinkler system piping shall be black steel and shall be minimum Schedule 40 for sizes 50 mm (2 inch) and less and minimum Schedule 10 for sizes greater than 50 mm (2 inch). Limit flow velocity in interior fire water piping to 6 meters per second (20 fps). Thrust blocks for underground piping shall be designed to restrain piping pressure of 2068 kPa (300 psig). Valves in the fire water system shall be designed for a minimum 1723 kPa (250 psig) working pressure.

(b) Provide a post indicator valve for the fire protection water line entering the building. Contractor shall provide a monitored Outside Stem and Yoke (OS&Y) valve on the fire protection water line serving each fire protection zone. The OS&Y valve shall be located near the branch from the fire water main. Water flow detectors shall be installed in the supply piping to each fire protection zone. The valve position signal and water flow alarms shall be interconnected with the fire alarm panel. All valves that could disable the sprinkler system shall be equipped with tamper switches, with tamper alarms transmitted to the fire alarm panel and to the fire alarm radio transceiver as a supervisory signal.

9.1.8 Protection of Piping Against Earthquake Damage

Sprinkler and fire pump piping systems shall be protected against damage from earthquakes. Seismic protection shall include flexible and rigid couplings, sway bracing, seismic separation assemblies where piping crosses building seismic separation joints, and other features as required by NFPA 13 for protection of piping against damage from earthquakes.

9.1.9 Fire Water Supply

Refer to Civil Design Criteria for design requirements and fire water flow data.

9.1.10 Fire Extinguishers

Provide fire extinguishers as required by applicable codes. Provide recessed cabinets in administrative areas.

9.1.11 Fire Hydrants

Refer to Civil Design Criteria for design requirements. Wall hydrants are not acceptable.

10.0 TESTING AND VERIFICATION

10.1 Summary

(a) Testing and verification is a quality assurance process of the installation of the systems in a facility. It is a process for achieving, verifying, and documenting the performance of each system to meet the operational needs of the facility. This process shall ensure the quality of installation and functionality of the facility, and shall include preparation of manuals and training of operation and maintenance personnel.

(b) Testing and verification shall be a continual process during the design and installation of the facility to ensure that the contract requirements, and the design build approach to meet those requirements, are realized in the final product. Communication between the design team and the build team shall include design assumptions, calculations, conditions (both environmental and system's output), and philosophies and assumptions about system and equipment controls.

(c) All testing and verification work shall be coordinated with and conducted in the presence of the Contracting Officer’s Representative. Work shall be conducted in accordance with UFGS Guide Specifications 15990 – TESTING, ADJUSTING, AND BALANCING OF HVAC SYSTEMS, and 15995 – COMMISSIONING OF HVAC SYSTEMS, in addition to requirements of this section.

10.2 Submittals

Submit the following:

(a) Quality-Assurance Submittals: Within 30 days from the Contractor's Notice to Proceed, submit two copies of evidence that the testing, adjusting, and balancing Agent and this Project's testing, adjusting, and balancing team members meet the qualifications specified in the "Quality Assurance" Article below.

(b) Contract Documents Examination Report: 60 days prior to start of TAB activities, submit two copies of the Contract Documents review report.

(c) Strategies and Procedures Plan: Contractor shall submit two copies of the testing and verification strategies and step-by-step procedures for TAB work as specified in the "Preparation" Article below. Include a complete set of report forms intended for use on this Project.

(d) Preliminary Testing, Adjusting, and Balancing Reports: Submit photo copies of the original data sheets attached to the applicable daily

reports. Submit all data sheets each day that the testing and balancing contractor is on site.

(e) Certified Testing, Adjusting, and Balancing Reports: Submit two copies of reports prepared, as specified in this Section, on approved forms certified by the testing, adjusting, and balancing Agent.

(f) Sample Report Forms: Submit two sets of sample testing, adjusting, and balancing report forms.

(g) Infrared Scan Report Forms: Submit two sets of sample infrared scan report forms.

10.3 Quality Assurance

(a) Agent Qualifications: Engage a testing, adjusting, and balancing agent certified by either AABC or NEBB.

(b) Testing, Adjusting, and Balancing Conference: Meet with the Owner's and the Engineer's representatives on approval of the testing, adjusting, and balancing strategies and procedures plan to develop a mutual understanding of the details. Ensure the participation of testing, adjusting, and balancing team members, equipment manufacturers' authorized service representatives, HVAC controls Installer, and other support personnel. Provide 7 days' advance notice of scheduled meeting time and location.

(1) Agenda Items: Include at least the following:

- Submittal distribution requirements.
- Contract Documents examination report.
- Testing, adjusting, and balancing plan.
- Work schedule and Project site access requirements.
- Coordination and cooperation of trades and subcontractors.
- Coordination of documentation and communication flow.
- Testing, Adjusting, and Balancing Reports: Use standard forms from NEBB's "Procedural Standards for Testing, Adjusting, and Balancing of Environmental Systems."Porposed infrared scanning proceedures.
- Proposed infrared scanning proceedures.
- Proposed infrared scanning equipment.
- Proposed infrared scanning report forms.

(c) Certification of Testing, Adjusting, and Balancing Reports:

(1) The testing and balancing contractor shall certify the testing, adjusting, and balancing field data reports. This certification includes the following: Review field data reports to validate accuracy of data and to prepare certified testing, adjusting, and balancing reports.

(2) Certify that the testing, adjusting, and balancing team complied with the approved testing, adjusting, and balancing plan and the procedures specified and referenced in this Specification.

(d) Instrumentation Type, Quantity, and Accuracy: As described in NEBB's "Procedural Standards for Testing, Adjusting, and Balancing of Environmental Systems," Section II, "Required Instrumentation for NEBB Certification."

10.4 Coordination

(a) Coordinate the efforts of factory-authorized service representatives for systems and equipment, controls installers, and other trade personnel to operate systems and equipment to support and assist testing, adjusting, and balancing activities.

(b) Notice: Provide 7 days' advance notice for each test. Include scheduled test dates and times.

(c) Perform testing, adjusting, and balancing after leakage and pressure tests on air and water distribution systems have been satisfactorily completed.

10.5 Examination

(a) Examine Contract Documents to become familiar with project requirements and to discover conditions in systems' designs that may preclude proper testing, adjusting, and balancing of systems and equipment.

(b) Verify that balancing devices, such as test ports, gauge cocks, thermometer wells, flow-control devices, balancing valves and fittings, and manual volume dampers, are required by the Contract Documents. Verify that quantities and locations of these balancing devices are accessible and appropriate for effective balancing and for efficient system and equipment operation.

(c) Examine approved submittal data of systems and equipment.

(d) Examine Engineer's design data, including system descriptions, statements of design assumptions for environmental conditions and systems' output, and statements of philosophies and assumptions about system and equipment controls.

(e) Examine equipment performance data, including fan and pump curves. Relate performance data to project conditions and requirements, including system effects that can create undesired or unpredicted conditions that cause reduced capacities in all or part of a system. Calculate system effect factors to reduce the performance ratings of HVAC equipment when installed under conditions different from those presented when the equipment was performance tested at the factory. To calculate system effects for air systems, use tables and charts found in AMCA 201, "Fans and Systems," Sections 7 through 10; or in SMACNA's "HVAC Systems--Duct Design," Sections 5 and 6. Compare this data with the design data and installed conditions.

(f) Examine systems for functional deficiencies that cannot be corrected by adjusting and balancing.

10.6 Preparation

(a) Prepare a testing, adjusting, and balancing plan that includes strategies and step-by-step procedures.

(b) Complete system readiness checks and prepare system readiness reports. Verify the following:

(1) Permanent electrical power wiring is complete.
(2) Hydronic systems are filled, clean, and free of air.
(3) Automatic temperature-control systems are operational.

(4) Equipment and duct access doors are securely closed.
(5) Balance, smoke, and fire dampers are open.
(6) Isolating and balancing valves are open and control valves are operational.
(7) Ceilings are installed in critical areas where air-pattern adjustments are required and access to balancing devices is provided.
(8) Windows and doors can be closed so design conditions for system operations can be met.

10.7 Testing, Adjusting, And Balancing

(a) General: Testing, adjusting, and balancing shall be performed as required in this section and in accordance with UFGS Section 15990 and 15995. Testing, adjusting and balancing shall include the following:

(1) Balancing airflow and water flow within distribution systems, including submains, branches, and terminals, to indicated quantities according to specified tolerances.
(2) Adjusting total systems to provide indicated quantities.
(3) Measuring electrical performance of equipment.
(4) Setting quantitative performance of equipment.
(5) Verifying that automatic control devices are functioning properly.
(6) Measuring sound and vibration.
(7) Provide thermal scan of electrical primary switchgear, main distribution panels, and motor control centers.
(8) Reporting results of the activities and procedures specified in this Section.
(9) Setting the circuit breaket trip units per the coordination study.
(10) Furnishing the results of the infrared scans.

(b) Vibration Testing: All rotating equipment with motors 15 kW (20 hp) and larger shall be vibration tested, and aligned to a maximum of 2.5 mm/sec (0.1 in/sec) velocity.

(c) De-Paint Bay Airflow:

(1) Contractor shall develop and submit a detailed test and balance procedure for the de-paint hangar airflow prior to commencing work.

(2) Test, adjust, and balance the de-paint bay airflow to provide a constant velocity across the aircraft zone (defined as the cross section of the aircraft plus 3 m (9.8 ft)). Air velocity measurements shall be taken in a plane perpendicular to airflow, at 8 m (26 ft) intervals along the length of the hangar. Velocity measurements shall be taken in a grid pattern across the cross section of the bay, starting at 2 m (6.5 ft) from the walls and 1.5 m (5 ft) from the floor and ceiling, with measurements taken 3 m (9.8 ft) on center. Velocities shall be balanced to be 30.5 m/min (100 fpm) maximum, 15.3 m/min minimum (50 fpm), 24.4 m/min (80 fpm) average in the aircraft zone, with a minimum of 15.3 m/min (50 fpm) at any point outside the aircraft zone. Velocities shall be balanced with filters in a clean and simulated loaded (dirty) condition. Provide a smoke test by walking a narrow plume of smoke through the hangar at 2 m (6.5 ft), 6 m (20 ft) and 12 m (40 ft) heights. Total airflow shall be measured in the supply and return air streams, and shall be balanced to –0 to +5% of design value.

(3) In addition to demonstrating airflow and velocities, provide space static pressure and temperature measurements to demonstrate that the

space maintains the desired static pressure and temperature during all modes of operation.

(d) De-Paint Facility Electrical System:

(1) Test and adjust each circuit breaker's adjustable trip elements to the settings determined by the coordination study. Confirm the proper operation of these circuit breakers.

(2) Perform a thermal scan of all medium voltage terminations installed by this project. Record all fuse data (manufacturer, style, voltage rating, ampere rating, model number and it's location) encountered during these procedures.

(3) Perform a thermal scan of all secondary cable and bus terminations installed by this project. Include all low voltage cable terminations rated 100 amperes or more. Include both ends of all medium voltage cable terminations.

(4) Repair any deficiencies uncovered by the thermal scan during an outage scheduled through the Contracting Officer. Rescan those repaired elements after the system has been re-energized for a minimum of 72 hours.

10.8 System Testing And Verification

(a) The result of testing and verification shall be fully functional systems that can be properly operated and maintained throughout the useful life of the facility. Testing and verification shall address the building as a total system, including: electrical, mechanical, process, plumbing, doors, safety systems, Aerospace NESHAP's, OSHA, etc. It shall prove a compliant, integrated facility and process system.

(b) The design-build team shall provide detailed testing and verification of all building systems including:
*8

(1) Lighting performance
(2) Non-process HVAC performance
(3) Process heating, ventilating and cooling performance (with and without the aircraft in the hangar)
(4) Noise performance
(5) Vibration performance
(6) Process System (DMSS, breathing air, process air, etc.) performance
(7) Non-process controls
(8) Process controls, including all alarms, warnings, and interlocks
(9) Boiler/chiller capacity (if not factory tested)
(10) Alarm/notification systems (fire, PA, doors, breathing air, filters, etc.)
(11) ~~Teleplatforms~~
(12) Cranes

(c) The contractor shall provide the initial load of materials (DMSS media, washrack soap, etc.) required for preliminary and final testing.

10.8.1 Preliminary Test and Verification

Contractor shall conduct preliminary tests during installation of system components. Manufacturer's representatives shall be present during the preliminary tests, and tests shall be conducted in the presence of the Contracting Officer's Representative (COR). Any deficiency identified during testing shall be corrected by the Contractor and system retested prior to final testing and verification.

10.8.2 Final Test and Verification

After all preliminary tests have been performed and accepted, Contractor shall conduct the final test and verification. Manufacturer’s representatives shall be present for the final test and verification. This test shall be performed in the presence of the Contracting Officer’s Representative and the User. Test shall demonstrate (w/o an aircraft) all aspects of the facility operation from receipt of materials through final wash and dock cleanup. The system testing and verification shall not be considered complete until at least one complete walkthrough has been accomplished without significant problems. Any system with a false alarm or failure shall be re-tested until satisfactory results are accomplished.

10.9 Operator Training

Operator training shall be provide as described in SECTION 01012 for all building and process systems.

10.10 Final Report

(a) General: Typewritten, or computer printout in letter-quality font, on standard bond paper, in 3-ring binder, tabulated and divided into sections by tested and balanced systems.

(b) Include a certification sheet in front of binder signed and sealed by the certified testing and balancing engineer.
   (1) Include a list of the instruments used for procedures, along with proof of calibration.

(c) Final Report Contents: In addition to the certified field report data, include the following:
   (1) Pump curves.
   (2) Fan curves.
   (3) Manufacturers' test data.
   (4) Electrical equipment thermal scan reports.
   (5) Equipment vibration test reports.
   (6) Field test reports prepared by system and equipment installers.
   (7) Other information relative to equipment performance, but does not include approved Shop Drawings and Product Data.

(d) General Report Data: In addition to the form titles and entries, include the following data in the final report, as applicable:
   (1) Title page.
   (2) Name and address of testing, adjusting, and balancing Agent.
   (3) Project name.
   (4) Project location.
   (5) Engineer's name and address.
   (6) Contractor's name and address.
   (7) Report date.
   (8) Signature of testing, adjusting, and balancing Agent who certifies the report.
   (9) Summary of contents, including the following:
      - Design versus final performance.
      - Notable characteristics of systems.
      - Description of system operation sequences if it varies from the Contract Documents.
   (10) Nomenclature sheets for each item of equipment.
   (11) Notes to explain why certain final data in the body of reports vary from design values.

(e) System Diagrams: Include schematic layouts of air and hydronic distribution systems, process flow diagrams, special plumbing system diagrams, and electrical diagrams. Present as single-line diagrams.

(f) Air-Handling Unit Test Reports: For air-handling units with coils, include the following:
- Unit Data.
- Motor Data.
- Test Data.

(g) Exhaust Fan Test Reports: For De-Paint bay exhaust fans, include the following:
- Unit Data.
- Motor Data.
- Test Data.

(h) Apparatus-Coil Test Reports: For apparatus coils, include the following:
- Coil Data.
- Test Data.

(i) Equipment Test Reports: For process equipment, include the following:
- Unit Data.
- Motor Data.
- Test Data.

(j) Electrical System Test Reports:

(1) Provide a table of recommended settings versus final settings for all circuit breaker adjustable trip elements.

(2) Document the temperature reading of all terminations scanned by phase (and neutral where applicable) noting the equipment label, compartment and location such that future thermal scan data can be easily compared to this initial data.

11.0 PERMITS

The Design-Build Contractor shall be responsible for assisting the COE in the preparation of the environmental and construction permit applications listed below. The permit forms are provided in Appendix N. The forms indicate the information that is required by the Design-Build Contractor. The Design-Build Contractor shall assist in the preparation of the listed permits, providing all required information and supporting documentation in a form ready for signature by the Owner and submittal to the applicable agency. Should the permitting agency require additional clarification or information during the permit review process, the Design-Build Contractor shall provide all necessary assistance to resolve the outstanding issue.

Permit Name/Type	Responsible Agency	Responsible Party For Application	Responsible Party Signature
Environmental Assessment	Georgia Environmental Protection Division (GA EPD)	COE	EM
Air Pollution Source	Georgia Environmental Protection Division	Design-Build	EM

Construction Permit	(GA EPD)	Contractor	
Title V Operating Permit Modification	Georgia Environmental Protection Division (GA EPD)	Design-Build Contractor	EM
Stormwater Construction Permit	Georgia Environmental Protection Division (GA EPD)	Design-Build Contractor	EM
Stormwater Pollution Prevention Plan	Georgia Department of Environmental Quality	Design-Build Contractor	EM
Sanitary Sewer Connection Permit	78 CES	Design-Build Contractor	EM
Water Connection	78 MDG/SGPB	Design-Build Contractor	EM
Crane Permit	Robins AFB	Design-Build Contractor	BCP/Base
Land Disturbing Activity Permit	Georgia Environmental Protection Division (GA EPD)	Design-Build Contractor	EM
Digging Permit	Robins AFB 78 CES	Design-Build Contractor	BCE
Demolition Permit	State of Georgia	Design-Build Contractor	COE

-------- END OF SECTION -------

SECTION 01014

PAINT FACILITY TECHNICAL DESIGN CRITERIA

1.0 CODES, STANDARDS AND CRITERIA

(a) In addition to the specific Codes, Standards and Criteria referenced throughout this RFP, the Design-Build Contractor shall prepare all design and construction documents in accordance with the most current edition of the following:

Applicable Department of Defense (DoD) regulations
Military Handbooks (MIL-HDBK's)
Air Force Regulations (AFR's), including AFR 88 series regulations
Air Force Instructions (AFI's)
Air Force Manuals (AFM's, AFMAN's)
Air Force Handbooks
Air Force Pamphlets (AFP's, AFPAM's)
Engineering Technical Letters (ETL's)
Engineering Manuals (EM's)
Engineering Guidance Letters (EGL's)
Construction Technical Letters (CTL's)

These documents are available via the internet at:

http://www.hnd.usace.army.mil/techinfo/

(b) The Design-Build Contractor shall also follow all current national and state codes, regulations and specifications involving civil, architectural, interior design, structural, mechanical, electrical, and environmental disciplines which are applicable to the engineering design and construction industry, including OSHA Safety and Health Standards and Air Force policy on Ozone Depleting Chemicals (ODCs).

(c) Use of National Fire Codes and Life Safety Codes, published by the National Fire Protection Association (NFPA), the International Building Code (IBC), the Americans with Disabilities Act (ADA), and the Uniform Federal Accessibility Standards (UFAS) is mandatory on all projects.

(d) Robins AFB has determined the following items are preferences given in order from most important/desired to less desired/important. The information is given to the Design/Build contractor so that he may balance his design decisions with the weighted desire of the base.

Paint Facility

1. A tail-in configuration.

2. View of the hangar docks (conference room, WS-12 supervisor office, or a separate viewing room).

3. Routing piping/other utilities in an accessible chase behind the dock wall(s).

Paint Equipment
*8
1. Delete~~Directly piping utilities to the teleplatforms(shop air, wash, etch, alodine, rinse water, etc.)~~.

2. Capability to directly pump detergent into the concentrated detergent tank from a tanker truck. This would be in addition to the capability to fill the tank from 208 L (55 gal) drums. Capability to directly pump other chemicals into their respective tanks has little or no significance.

(e) The Design-Build Contractor shall coordinate the requirements for this facility with that of the depaint hangar. The paint hangar will not be awarded without the depaint hangar. Primary utilities (roads, drives, gas, water, etc.) shall not be duplicated unnecessarily.

2.0 EXISTING CONDITIONS

2.1 ASBESTOS-CONTAINING MATERIALS (ACM)

(a) Several facilities on Robins AFB contain asbestos in the form of pipe insulation, boiler and tank insulation, wall and ceiling materials, floor tile and mastic, exterior siding, roofing, and flexible duct connectors. The government has performed a preliminary survey to determine the presence of asbestos in facilities where work will be performed – see Appendix I – Environmental and Abatement Information for the resulting findings.

(b) The Design-Build Contractor will be required to perform asbestos field surveys and testing to determine the extent of ACM present in all buildings being demolished. Field surveys shall fully describe locations, types (chrysotile, crocidolite, amosite, anthophyllite, tremolite, and actinolite), and quantities. Include percentage of asbestos and composition of material.

(c) Submit documentation and certifications of personnel trained to take ACM samples to the CO prior to beginning asbestos surveys.

(d) Submit samples for ACM testing to a certified laboratory. The Design-Build Contractor shall submit to the CO the laboratory results and other pertinent information of samples sent for testing for ACM as soon as they become available.

(e) Refer to Appendix G – Specific Base Wide Technical Specifications for specification Section 01560 – ENVIRONMENTAL REQUIREMENTS. This section describes the general guidelines/procedures at Robins AFB. The abatement design drawings and specifications shall be based on these local procedures. The design-build contractor shall provide his own asbestos abatement specification to comply with the latest environmental regulations and procedures. All abatement design drawings and specifications shall be coordinated through the Corps of Engineers.

2.2 SPECIAL WASTE

(a) Several facilities on Robins AFB contain special waste in the form of fluorescent fixtures/lamps, HID fixtures, ballasts, mercury thermostats and air conditioning systems with refrigerants.

(b) The Design-Build Contractor will be required to perform field surveys and testing to determine the extent of special waste present in all buildings being demolished. Field surveys shall fully describe locations, types, and quantities.

(c) Submit documentation and certifications of personnel trained to take special samples to the CO prior to beginning asbestos surveys.

(d) Submit samples for special waste testing to a certified laboratory. The designer shall submit to the CO the laboratory results and other pertinent information of samples sent for testing for special waste as soon as they become available.

(e) Refer to Appendix G – Specific Base Wide Technical Specifications for specification Section 01560 – ENVIRONMENTAL REQUIREMENTS. This section describes the general guideline/procedures at Robins AFB. The abatement design drawings and specifications shall be based on these local procedures. The Design-Build Contractor shall provide his own special waste abatement specification to comply with the latest environmental regulations and procedures. All abatement design drawings and specifications shall be coordinated through the Corps of Engineers.

2.3 LEAD-BASED PAINT

(a) For all buildings being demolished the Design-Build Contractor shall comply with 29 CFR 1926 with respect to expose of workers to hazardous materials.

(b) The Design-Build Contractor shall assume that all existing demolition materials do not contain lead-based paint (except as noted in item a above). The Design-Build Contractor’s bid price shall be based on the assumption that all demolition (excluding items identified as ACM) will be disposed of as standard construction waste. Upon contract award, the Design-Build Contractor shall test all existing facilities to validate this baseline and provide test results to the Corps of Engineers in a timely fashion as not to impact the Design-Build Contractor’s schedule. If the test results require mitigation of the materials as lead contaminated waste a construction modification will be instituted to pay for the additional project costs

2.4 POINTS OF CONTACT

(a) The Corps of Engineers shall be notified immediately of any damage to government property or injury to AF personnel caused by the Design-Build Contractor.

(b) Information regarding fire prevention, welding and cutting, or fire protection systems shall be obtained from and coordinated with the Corps of Engineers.

(d) Base traffic regulations shall be observed by all Design-Build Contractor personnel. Information regarding such regulations shall be obtained from and coordinated with the Corps of Engineers.

2.5 CONTAMINATED SOIL

An environmental site assessment has been completed. It has been determined that this project does not contain any subsurface environmental hazards. However, in the event that abnormalities, discolorations, odors, oil, or other signs of potential contamination by hazardous materials are encountered during excavation or other construction activities, notify the Government immediately. Follow with written notice within 24 hours, indicating date, time, and location of potential contaminants encountered.

2.5 GEOTECHNICAL ENGINEERING DATA

2.5.1 Geotechnical Investigation

The Government has performed geotechnical investigations at the project site. The results of the explorations are discussed in subsequent paragraphs of this section. The results of the explorations are furnished for informational and bidding purposes only and not for final design.The Design-Build Contractor, with his consulting geotechnical engineer, shall perform additional geotechnical investigations and testing as are deemed necessary. The consulting geotechnical engineers participating in the design shall be registered engineers and be familiar with the physiographic location of the project. The Design-Build Contractor shall be fully responsible for acceptable foundations, pavements and other geotechnical aspects for the proposed project.

2.5.2 Design-Build Contractor Investigation

The Design-Build Contractor, through his consulting geotechnical engineer, shall perform additional geotechnical investigations and testing to determine site-specific geotechnical conditions. The site-specific geotechnical conditions, together with recommendations specific to the geotechnical design and construction requirements for the proposed project, shall be addressed in a geotechnical report prepared by the consulting geotechnical engineer. The report shall include, but not be limited to, the following:

a. Description of the site as to topography, existing surface conditions, and any other features that might influence the design.

b. Description of the investigation program and the methods used. Subsurface exploration may include soil test borings, cone penetrometer test (CPT) soundings, and test pits. The investigation, sampling, and identification of subsurface materials shall be in accordance with methods and procedures described in ASTM D 420. Soil investigation and sampling by hollow-stem auger borings shall be in accordance with AASHTO T 251. Drilling and sampling with the "Standard Penetration Test" (SPT) split-barrel sampler shall be in accordance with ASTM D 1586. The procedure shall be modified to provide for continuous standard penetration and sampling tests for the initial 3.7 meters (12 feet) of the boring. Beginning at a depth of 4.6 meters (15 feet) below grade, penetration and sampling tests can be performed every 1.5 meters (5 feet) and at each change in soil stratification or soil consistency. The location of the groundwater table, if encountered, shall be measured and recorded after 24 hours. If drilling techniques that prevent determination of the groundwater table are used, install at least one piezometer for every four explorations to measure the depth to the groundwater table. Classification of soils shall be in accordance with ASTM D 2487 or D 2488, as appropriate. Cone penetrometer test (CPT) soundings shall be in accordance with ASTM D 5778. Undisturbed soil sampling shall be in accordance with ASTM D 1587.

The depths of explorations shall be of sufficient depth to evaluate bearing capacity and settlement potential. However, beneath structures, explorations shall extend to a minimum depth of 7.6 meters (25 feet) below existing ground surface or below final design grade, whichever is lower. Beneath roads, hardstands, and/or parking areas, explorations shall extend to a minimum depth of 1.5 meters (5 feet) below existing ground surface or below final design grade, whichever is lower.

The Design-Build Contractor shall be responsible for all applicable clearances and permits and for the protection of all underground utilities from damage during field investigations. Utility clearances and digging permits are required prior to drilling on the installation. Procurement of the clearances and permits shall be coordinated through the Contracting Officer.

c. Discussion of the subsurface soil conditions and stratigraphy and groundwater conditions.

d. Location plan of explorations.

e. Logs of explorations. Indicate on logs complete information on who, when, and how made. Show soil description, standard penetration resistance, N, or other type resistance, topsoil, water level observations, surface elevation and datum, and any other information gathered during the exploration.

Exploration locations shall be surveyed. Surveyed elevations and coordinates shall be provided on each exploration log. Elevations shall be in accordance with NGVD 29 and horizontal coordinates shall be in accordance with NAD 83 (Georgia State Plane Coordinates); accuracy to be plus or minus 1 meter (3 feet) horizontal and plus or minus 150 mm (0.5 foot) vertical.

Soil test boring logs shall show graphical representation of soil strata, location of each change by depth or elevation, location of each sample by depth or elevation, and number of blows for each 150 mm (6 inches) and amount of soil recovered for each sample location. Logs shall also indicate type and size of casing, type of drilling fluid, and type and size of drill bit. If no casing is used, indicate size of borehole. Indicate when boring is terminated due to refusal.

Soil classifications for final logs shall be based on the field classifications, the results of tests, and further inspection of samples in the laboratory by geotechnical engineers.

Include a chart illustrating the soil classification criteria and the terminology and symbols used on the boring logs.

Locations of all explorations shall be shown on the grading and drainage plates of the submittal drawings. Logs of all explorations shall be included on plan(s) of the submittal drawings. Additionally, locations of all explorations, logs of all explorations, and results of all laboratory testing shall be included on drawing sheets in the final “As-Built” drawings. If necessary, the logs and test results can be scanned onto the drawing sheets.

f. Laboratory test data shall be included in detail. Laboratory testing shall be in accordance with the requirements set forth in EM 1110-2-1906, Laboratory Soils Testing, EM 1110-2-1909, Calibration of Laboratory Soils Testing Equipment, and/or applicable ASTM standards. All laboratory testing shall be performed by a commercial testing laboratory that has been validated by the Engineer Research and Development Center Materials Testing Center (MTC) under the Corps of Engineers laboratory inspection and validation program. The laboratory shall be listed on the list of Cops of Engineers Validated Laboratories.

g. Notation of the location of strata containing organic materials, weak materials or other inconsistencies that might affect engineering conclusions.

h. Pavement design, or if not responsible for pavement design, pavement structural design data, including design California Bearing Ratio (CBR) and modulus of subgrade reaction.

i. Discussion of the facilities under design and recommendations regarding foundation support of the structures and slabs on grade, including soil bearing pressures, bearing elevations, foundation design recommendations and anticipated settlements, including total and differential.

j. Anticipation of, and management of, groundwater.

k. Discussion of site preparation and the effect of weather and construction equipment on soils during construction.

l. Areas requiring undercutting and removal of unsatisfactory soils.

m. Types of materials to be excavated and possible uses and/or disposition of the materials.

n. Fill and backfill placement procedures, including recommended moisture content range, and types of compaction equipment.

o. Results of pH tests and salinity tests and resistivity measurements, as appropriate, necessary to design corrosion control and grounding systems. The raw field data shall be included in the report.

p. Lateral earth pressures and pressure coefficients (active, passive, and at rest) and internal friction angles for design of walls below grade, including backfill, compaction and subdrainage, and their requirements.

q. Results of laboratory soils testing, to include classification and compaction tests, on representative samples of proposed borrow material (both on and/or off the installation). Testing shall be as specified in subparagraph 2.5.11.1. If borrow material is to be obtained from sources off the installation, provide the name and location of the borrow source.

r. Provide calculations that support the recommendations for the foundation design. The calculations may be included in an appendix to the report. Calculations shall include loadings, capacities, safety factors, settlement analysis, bearing analysis, and references from which calculations are based. Any graphs and formulas shall be clearly indicated along with derivation of curve slopes and data derived from laboratory testing. Computer outputs shall also be included.

Three original copies of the geotechnical report shall be submitted with the 60 percent submittal. If revisions are made to the 60 percent design submittal that require revisions to the geotechnical report, a revised report (three original copies) shall be provided with the final design submittal.

2.5.3 Certification

The Contractor and his professional geotechnical engineer consultant shall certify in writing that the design of the project has been developed consistent with the site-specific geotechnical conditions. The certification shall be stamped by the consulting professional geotechnical engineer and shall be submitted with the 60 percent design submittal. If revisions are made to the 60 percent design submittal, a new certification shall be provided with the final design submittal.

2.5.4 Field Exploration

2.5.4.1 Subsurface conditions at the project site were explored by five soil borings (designated B-1 thru B-5) drilled at the approximate locations shown on the Site Layout drawings included with this RFP. All of the borings were drilled to 25 feet below the existing ground surface. Five additional borings (B-6 through B-10) were drilled for the adjacent De-Paint Facility.

2.5.4.2 Boring locations were established in the field by measuring distances and estimating right angles from the existing site buildings and other site features.

2.5.4.3 The test borings were drilled by Geotechnical and Environmental Consultants (GEC), Inc., Macon, Georgia, under contract to the Savannah District. The borings were drilled with a CME 55 drill rig; a 57 mm (2-1/4 inch) hollow-stem auger was used to advance the boreholes. Split-barrel sampling with Standard Penetration Testing (SPT) was performed at intervals shown on the boring logs. All soil sampling and Standard Penetration Testing were in general accordance with ASTM D 1586. In the Standard Penetration Test, a soil sample is obtained with a standard 38 mm (1-1/2 inch) I.D. by 50 mm (2-inch) O.D. split-barrel sampler. The sampler is first seated 150 mm (6 inches) and then driven an additional 300 mm (12 inches) with blows from a 63.5 kg (140-pound) hammer falling a distance of 760 mm (30 inches). The number of blows required to drive the sampler the final 300 mm (12 inches) is recorded and is termed the "standard penetration resistance," or the "N-value." Penetration resistance, when properly evaluated, is an index of the soil's strength, density, and foundation support capability. Groundwater levels were measured in the boreholes during drilling; each borehole was backfilled immediately upon termination of drilling.

2.5.4.4 Representative portions of the soil samples taken in the field were sealed in airtight containers and transported to the driller's laboratory. In the laboratory, they were examined by an engineer and classified. Classification of the soil samples was performed in general accordance with ASTM D 2488 (Visual-Manual Procedure for Description of Soils). The soil classifications include the use of the Unified Soil Classification System described in ASTM D 2487 (Classification of Soils for Engineering Purposes). Since the soil descriptions and classifications are based on visual examination, they should be considered approximate, except where the samples were subjected to laboratory testing, as described below.

2.5.4.5 Soil boring logs that graphically depict soil descriptions, standard penetration resistances, and observed groundwater levels, are shown on the drawings included with this RFP.

2.5.4.6 Six of the Standard Penetration Test samples were selected for grain-size distribution testing. Six additional samples from borings at the adjacent De-Paint Facility were also tested for grain size distribution. The laboratory tests were performed in substantial accordance with applicable ASTM standards. Results of the laboratory testing are shown on the drawings included with this RFP.

2.5.5 SITE AND SUBSURFACE CONDITIONS

2.5.5.1 Site Description

The proposed Corrosion Control Paint Facility will be located approximately 120 meters (400 feet) east of Gate No 1 and 120 meters (400 feet) north of existing hangars numbered 47 and 48 or about 30 meters (100 feet) north of the proposed De-Paint Facility. The site for the De-Paint and Paint Facilities totals approximately seven acres in area. The northern half of the site generally slopes at about two percent from the west toward the east with elevations generally ranging from 88.7 to 85.7 meters (291 feet to 281 feet), respectively. The site contains numerous parking lots, service roads, utilities and buildings numbered 53 and 56 to be removed.

2.5.5.2 Area and Site Geology

The project site is located about 30 km (20 miles) below the Fall Line in the Coastal Plain Physiographic Province of Georgia. The Coastal Plain consists mainly of marine sediments including sands, clays, silts and combinations of each. The soils were deposited during successive periods of fluctuating sea level and moving shoreline. The soils tend to have random distribution and

properties. Upland sediments may be interlayered with shoreline deposits in areas where the Piedmont Physiographic Province is relatively close.

2.5.5.3 Subsurface Conditions

Borings B-1 through B-5 were drilled for the Paint Facility. Borings B-6 through B-10 were drilled for the De-Paint Facility. The soil test borings encountered both fill soils and Coastal Plain soils. Borings B-1, B-3, B-5, B-6 and B-10 were drilled through existing pavement. Fill soils were encountered in borings B-2 through B-10 at depths ranging from 1 to 2 meters (3 to 6 feet) below the existing ground surface. The fill soils consist of clayey and silty sands. The consistency of the clayey sand ranged from medium stiff to stiff. The density of the silty sands, which are interrupted by an occasional thin layer of sandy clay, ranged from loose to medium. The Coastal Plain soils encountered consisted of predominantly silty sands, clayey sands, occasionally interrupted by a layer of sandy clay. The standard penetration resistance values, or N-values, within the soils were scattered. N-values in the fill soils ranged from 5 to 28; N-values in the Coastal Plain soils ranged from 4 to 50 with most between 15 and 25.

2.5.5.4 Groundwater Conditions

Groundwater was encountered immediately after drilling at depths ranging from 5.8 to 6.7 meters (19 to 22 feet) below existing grade in borings B-1 through B-5 (Paint Facility). Groundwater was encountered immediately after drilling at depths ranging from 4 to 5.5 meters (13 to 18 feet) below existing grade in borings B-6 through B-10 (De-Paint Facility). No water was encountered in B-7 at completion of the boring. Each borehole was backfilled immediately upon termination of drilling. Groundwater levels can fluctuate depending on climatic and rainfall conditions. Normally, the highest groundwater levels occur in late winter and spring and the lowest levels occur in late summer and fall.

2.5.6 Foundation Design

2.5.6.1 General

Given the proposed site and the types of proposed structures, it is anticipated that shallow spread footings can be used for support of the structures.

2.5.6.2 Allowable Bearing Pressure

For bid purposes, assume an allowable soil bearing pressure of 120 KPa (2500 psf), based on total load. The consulting geotechnical engineer shall determine allowable soil bearing pressure. An adequate level of protection against structural failure due to uniform and/or differential foundation settlement or general shear shall be provided. A one-third increase in the allowable bearing pressure can be used in designing footings for additional temporary live loads such as those due to wind or seismic activity; however, increases in allowable stress in structural members shall not be used with these loads.

2.5.6.3 Footing Dimensions

Column footings and load-bearing wall footings shall have minimum dimensions of 762 mm (30 inches) and 610 mm (24 inches), respectively, and shall be located at a minimum depth of 610 mm (24 inches) below finish floor or finish grade, as appropriate. Non load-bearing wall footings shall have a minimum width of 457 mm (18 inches) and shall be located at a minimum depth of 457 mm (18 inches) below finish floor or grade, as appropriate.

2.5.7 Seismic Design

Seismic loads shall be computed in accordance with IBC 2000, except as modified by UFC 1-200-01. The project site shall be classified as Site Class D for the purpose of determining maximum considered earthquake spectral response accelerations.

2.5.8 Slabs on Grade

All interior slabs on grade, including storage rooms, shall be underlain by a moisture vapor barrier consisting of lapped polyethylene sheeting having a minimum thickness of 0.15-mm (6 mils) and a minimum 100 mm (4-inch) thick capillary water barrier of open graded, washed pea gravel, or crushed stone. Concrete slabs shall be jointed around columns and along supported walls to minimize cracking due to possible differential movement.

2.5.9 Soil Compaction

2.5.9.1 Soil compaction shall be achieved by equipment approved by the consulting geotechnical engineer. Soil materials shall be moistened or aerated as necessary to provide the moisture content that will readily facilitate obtaining the compaction specified with the compaction equipment used.

Each layer of structural fill and subgrades shall be compacted to the following minimum percent of the modified Proctor maximum density, determined in accordance with ASTM D 1557:

Beneath structures and building slabs, around footings and in trenches,	90 percent
Beneath streets and paved areas, except top 300 mm (12 inches) in fill and top 200 mm (8 inches)in native soil,	90 percent
Beneath streets and paved areas, top 300 mm (12 inches) in fill and top 200 mm (8 inches)in native soil,	95 percent
Beneath shoulders,	90 percent
Beneath sidewalks and grassed areas	85 percent
Base course under paved areas,	100 percent

The requirements shall be verified or modifications recommended by the consulting professional geotechnical engineer in the report wherever engineering, soils, or climatic factors indicate the necessity. Any modification to the specified compaction requirements shall require the approval of the Contracting Officer.

2.5.9.2 The Design-Build Contractor shall edit and submit the following UFGS Specifications:

02300 Earthwork
02315 Excavation, Filling and Backfilling for Buildings
02316 Excavation, Filling and Backfilling for Utilities

2.5.10 Pavement Design Parameters

For bid purposes, assume that the existing satisfactory subgrade soils after compaction will have a California Bearing Ratio (CBR) of 8 and a corrected Modulus of Subgrade Reaction, K, of 47,500 kN/m^2 per meter (175 psi per inch). The Design-Build Contractor's consulting geotechnical engineer shall determine the appropriate CBR and Modulus to be utilized in the design of pavements.

2.5.11 Construction Quality Control Testing

2.5.11.1 Prior to initiating any structural fill placement and/or compaction operations, representative samples of the soils which will be used as structural fill or subgrade, both suitable on-site soils and off-site soils (borrow), shall be obtained and tested to determine their classification and compaction characteristics. The samples shall be carefully selected to represent the full range of soil types to be used. The moisture content, maximum dry density, optimum moisture content, grain-size and plasticity characteristics shall be determined. These tests are required to determine if the fill and subgrade soils are acceptable and for compaction quality control of the subgrades and structural fill. A minimum of 5 compaction tests shall be performed on materials classified as satisfactory for use.

Tests for the above soil properties shall be in accordance with the following:

Moisture Content	ASTM D 2216
Maximum Dry Density and Optimum Moisture	ASTM D 1557
Grain-Size (Wash No. 200, w/o Hydrometer)	ASTM D 422 and ASTM D 1140
Plasticity	ASTM D 4318

2.5.11.2 A representative number of in-place field density tests shall be performed in the subgrade of compacted on-site soils and in the structural fill and backfill to confirm that the required degree of compaction has been obtained. In-place density tests shall be performed in accordance with the sand cone method prescribed in ASTM D 1556; the use of nuclear gauges for density testing will not be permitted. At least one density test shall be performed for each 1000 square meters (10,000 square feet), or portion thereof, of compacted existing onsite soil subgrade, and in each lift of compacted structural fill. At least one density test shall be performed for each 30 linear meters (100 linear feet) in the bearing level soils of continuous footings. Density tests shall be performed at 30-meter (100-foot) intervals along roadway subgrade soils. In addition, where utilities are located beneath structures or pavement, a density test shall be performed for each 50 linear meters (150 linear feet) of backfill placed per foot of depth. Where other areas are compacted separately by manually operated compactors, a minimum of one density test shall be performed for every 25 square meters (250 square feet), or portion thereof, of fill placed per foot of depth.

2.5.11.3 Any area that does not meet the required compaction criteria shall be reworked, and retested. If the moisture content of the soil is within the recommended range, additional compaction may be all that is necessary to increase the density. If the moisture content is not within the recommended range, then, the moisture content shall be adjusted to within the range, and the area recompacted.

2.5.11.4 All laboratory and field density testing shall be performed by a commercial testing laboratory qualified in this type of work and approved by the Contracting Officer.

2.5.12 Soil Treatment

2.5.12.1 The pesticide applicator's principal business shall be pest control and the pesticide applicator shall be State certified in the U.S. Environmental Protection Agency (EPA) pesticide applicator category which includes structural pest control, and certified in the State of Georgia.

2.5.12.2 Pesticides shall be delivered to the project site in sealed and labeled containers in good condition as supplied by the manufacturer or formulator. Pesticides shall be stored, handled, and used in accordance with manufacturer's labels. Labels shall bear evidence of registration under the Federal Insecticide, Fungicide, and Rodenticide Act (MX), as amended.

2.5.12.3 The Design-Build Contractor shall formulate, treat, and dispose of termiticides and their containers in accordance with label directions. Pesticides and related materials shall be kept under lock and key when unattended. Proper protective clothing and equipment shall be worn and used during all phases of termiticide application.

2.5.12.4 The Design-Build Contractor shall provide a 5-year written warranty against infestations or reinfestations by subterranean termites of the buildings constructed under this contract. Warranty shall include annual inspections of the building. If live subterranean termite infestation or subterranean termite damage is discovered during the warranty period, and the soil and building conditions have not been altered in the interim, the Design-Build Contractor shall:

a. Retreat the soil and perform other treatment as may be necessary for elimination of subterranean termite infestation;

b. Repair damage caused by termite infestation; and

c. Reinspect the building approximately 180 days after the retreatment.

2.5.12.5 Termiticides shall be currently registered by the EPA.

2.5.12.6 At the time of application, the soil moisture content shall be sufficiently low to allow uniform distribution of the treatment solution throughout the soil. Applications shall not be made during or immediately following heavy rains or when conditions may cause runoff and create an environmental hazard.

2.5.12.7 The Design-Build Contractor shall establish complete and unbroken vertical and/or horizontal (as necessary) soil poison barriers between the soil and all portions of the intended structure that may allow termite access to wood and wood related products. Application shall not be made to areas intended for use as a plenum air space. Surface treatments shall not be made for areas to serve as crawl spaces. Termiticide shall be applied as a coarse spray and provide uniform distribution unto the soil surface. Treatment shall be applied prior to placement of the vapor barrier and at least 12 hours prior to concrete placement. Where treated soil or fill material is not to be covered with a vapor barrier or waterproof membrane; adequate precautions shall be taken to prevent its disturbance. Soil or fill material disturbed after treatment shall be retreated as specified above before placement of slabs or other covering structures. Treatment of the soil on the exterior sides of foundation walls, grade beams, and similar structures shall be coordinated with final grading and planting operations so as to avoid disturbance of the treated barriers. Manufacturer's warnings and precautions shall be observed in the handling and use of such materials. Care shall be taken to prevent these chemicals from entering water supply systems, potable water supplies, or aquifers; and that they do not endanger plants or animals. The Contracting Officer shall be notified at least 48 hours prior to

beginning of treatment and formulating, mixing, and application shall be performed in the presence of the Contracting Officer's representative.

2.5.12.8 Rates and methods of application shall be in accordance with the manufacturer's instructions on the pesticide label. Maximum application or dosage rates shall be used. If the pesticide contains less than the amount of active ingredient specified on the label, work shall be repeated with pesticides conforming to this specification.

2.5.12.9 The Design-Build Contractor shall dispose of residual pesticides and containers off Government property in accordance with label instructions and EPA criteria.

2.5.12.10 The Design-Build Contractor shall edit and submit the following UFGS Specification:

02364 Termiticide Treatment Measures for Subterranean Termite Control

2.5.13 Decay Treatment

The Design-Build Contractor shall be responsible for determining and implementing the appropriate treatment for prevention of subsurface induced decay.

2.5.14 Radon Mitigation

The design and construction of foundation walls, slabs, and crawl spaces shall include provisions for the reduction of radon entry and facilitate its removal. Radon mitigation shall comply with the requirements of EPA 402-R-94-009.

2.5.15 Soil Resistivity Testing

The Design-Build Contractor shall be responsible for all soil resistivity testing required for cathodic protection design of underground utilities.

2.5.16 Borrow

Borrow material shall be selected to meet the requirements and conditions of the particular fill or embankment for which it is to be used. Borrow material shall be obtained from borrow areas off base from approved sources, either private or public. The Contractor shall obtain from the owners the right to procure material, pay royalties and other charges involved, and bear the expense of developing the sources, including rights-of-way for hauling. Unless specifically provided, no borrow shall be obtained within the limits of the project site without prior written approval. Necessary clearing, grubbing, and satisfactory drainage of borrow pits and the disposal of debris thereon shall be considered related operations to the borrow excavation. Borrow pits shall be neatly trimmed and drained after the excavation is completed.

2.6 DEMOLITION AND REMOVALS

The Design-Build Contractor shall survey and stake out the project boundaries before starting work. The survey drawing provided in the RFP indicates existing conditions and locations of existing utilities. The Design-Build Contractor may utilize the utilities during construction operations and may incorporate the utilities as part of the final project. If these existing utilities are determined to be inadequate for construction operations or incorporation into the final facility, they will be upgraded as part of the construction project. However, if the Design-Build Contractor elects not to

use the existing utilities, they shall be demolished and removed back to their respective mains as part of the construction project. Existing utilities that interfere with this project shall be relocated. The information shown on the survey drawing is the most recent data. The Design-Build Contractor shall be responsible for furnishing an independent topographic survey of the project site, and all line and grade surveys, and as-built surveys of the construction. All demolition debris shall be removed to the landfill off post.

3.0 CIVIL DESIGN CRITERIA

3.1 TRAFFIC CONTROL

See Section 01040 – SITE REQUIREMENTS for traffic control requirements.

3.2 GENERAL

(a) The haul route shall be from Gate 4 and POV access shall be from Gate 1 as illustrated on the drawings.

(b) The Design-Build Contractor shall confine all work as described herein. The limits of the Design-Build Contractor’s construction staging and work area are illustrated on the plans. The construction limits shall not impact the operation of Perimeter Road. The orientation of the site will be for aircraft access from the aircraft apron on the east and vehicle access from the perimeter roadway on the west side of the site at the rear of the hangar. The size of the site is a constraint. Full diligence must be maintained to meet the proper scope within the size of the site. Airfield clearance requires that the hangar and associated equipment does not encroach upon the asphalt pavement adjacent to the concrete aircraft apron. However, the asphalt pavement must be demolished as required to provide for an aircraft entrance into the hangar and to meet site drainage requirements. The hangar and associated equipment shall not impact Building 43 or 44 or their functions. The hangar shall not be located within 12 meters (40 feet) of Building 43. The hangar, associated equipment, associated features, and the like shall be set back a minimum of 9m (30 feet) from Perimeter Road and shall not impact the existing alignment of perimeter road. As described in Section 01013, the hangar shall be located to allow for the construction of the Corrosion Control Depaint facility. The height of the structure cannot penetrate the runway airspace imaginary surfaces. All use of cranes or helicopters during construction must be coordinated with the Government.

(c) Building Setback Requirements: The building, access roads, parking areas and other features shall be located on the site in accordance with the DOD Antiterrorism/Force Protection (AT/FP) Construction Standards UFC4-010-01. The Government has evaluated the status of Building 43 and determined that the hangar must not be located within 10 meters (33 feet) of Building 43 to comply with AT/FP criteria. The Government has also determined that the Paint and Depaint Hangars are classified as uninhabited structures and as such there is not a minimum AT/FP separation between the two hangars.

(d) The facility shall include aircraft pavement to access the aircraft ramp; parking for vehicles including drainage, and exterior lighting; relocation of equipment and utilities as necessary and connection to base utilities.

(e) The project will require that Buildings 53 and 56 be demolished in their entirety.

(f) The new project grading and storm water system shall not impact the surrounding buildings. Construction shall not impact the existing drainage system adjacent to the site.

(j) Excess soil shall be disposed of off-site in accordance with the Base Facility Standard.

(k) The Design-Build Contractor shall prepare a Foreign Object and Debris (FOD) Protection Plan and submit the plan to the Government for review and approval prior to performing any construction activities. The FOD Protection Plan shall be adhered to throughout all phases of construction.

3.3 ROADWAYS AND ACCESS DRIVES

(a) Connections to existing asphalt or concrete pavements shall be accomplished by saw cutting the adjacent existing pavement. The replacement pavement shall be IAW base standards.

(b) All pavement and radii dimensions in this section are from face of curb to face of curb. Minimum access drive width shall be 7.5 meters (24 feet). Minimum turning radius for all intersections shall be 6 meters (20 feet) except where fire truck access and semi-truck and trailer access is required. Design-Build Contractor shall consider the types of vehicles traversing and parking on these facilities. Vehicles shall include but not be limited to, passenger cars, emergency vehicles, garbage, fire trucks, military vehicles, delivery service, and utility vehicles. Design-Build Contractor shall provide traffic control signs and pavement markings. Parking stripes shall be white and handicap parking stripes shall be blue.

(c) Pavement structure shall be designed for actual vehicle loadings and frequencies. Access drives shall be asphalt pavement with graded crushed aggregate base course or Portland cement concrete. Pavement structure thickness shall be in accordance with TM-5-822-5, Chapter 1 and TM 5-822-5, Chapter 3. Pavement structure shall be designed for a 20-year pavement life.

(d) A loading dock access area shall be provided at the rear of the facility for standard maximum legal-sized semi-truck and trailer combinations, and shall be concrete paved.

(e) The Design-Build Contractor shall provide access roadway and dumpster pads to accommodate one GFGI dumpster.

(f) Access roads shall be provided to allow Fire Vehicle Access to the Hangar IAW ETL-02-15 and NFPA 1. Access lanes and roads shall be striped with 15 mm (6 inch) wide red stripes and 1.2 meter (4 foot) lettering indicating “Fire Lane – Do Not Park”.

(g) Roads, Streets, Access Drives, And Parking Areas: Geometric design of all roads, streets, access drives, and parking areas shall conform to applicable portions of TM 5-803-5, TM 5-803-14, TM 5-822-2, Radii, to back of curb, for intersections are standardized as follows for design:

Primary and Secondary Intersection 9 meters (30 ft)
Tertiary intersections (including residential streets) 6 meters (20 ft)
Access drives at end parking space 1.5 meters (5 ft)

Service Drives: Service drive design should be as simple as criteria, function, and location justify. Width of drives to unloading ramps or docks for usual types of trucks or tractor trailers are:

Trucks, SU = 3.6 meters (12 ft)
Semi-trailers, C43 to C50 = 4.8 meters (16 ft)
Semi-trailers, greater than C50 = 7.6 meters (25 ft)

Pavement at Loading Platforms: The minimum paved area depth in front of loading platforms at warehouses and storage facilities shall be as follows:

For van-type (SU) trucks = 20 meters (65 ft), including street width. For semi-trailer, (C43 to C50) = 26 meters (85 ft), including street width (Depots = 29 meters (95 ft)).

The first 6 meters adjacent to the platform shall be concrete.

Pavement at Dumpster Pads: The first 4.5 meters (15 ft) of pavement adjacent to, and including dumpster pads, shall be concrete.

3.4 SECURITY FENCES

(a) Requirements: Fencing shall be IAW Military Handbook 1190 and AFM 86-2 and the requirements of Section 01040.

(b) Temporary Fencing: The Design-Build Contractor shall erect a temporary flight line fence to isolate the construction site from the secure side of the base. The temporary fencing shall also prevent FOD from entering the adjacent aircraft movement areas and shall have fabric IAW Section 01040.

(c) Permanent Fence: Flight line fencing shall have 6 meters (20 feet) of clear space on the secure side and 9 meters (30 feet) of clear space on the unsecure side. Flight line fencing shall not be connected to buildings, equipment sheds, or similar features. The existing fence shall be extended around the rear (west side) of the hangar to form a continuous fence line. In the event that the hangar is less than 15.25 meters (50 feet) from Building 43, the flight line fence may be placed around Building 43 such that Building 43 is on the secure of the fence.

(d) The Design-Build Contractor shall maintain a continuous, secure Flight Line fence at all times.

3.5 VEHICLE PARKING

(a) Provide vehicle parking immediately adjacent to building for 3 GOV, 2 POV and 1 handicap spaces. Ramps shall be provided for handicapped access.

(b) All parking shall be off-street parking. Handicap parking stalls shall be provided. Area lighting and landscaping shall reinforce the parking area in accordance with the Robins AFB Installation Design Guide while meeting functional and safety requirements.

(c) Parking areas shall be paint striped and adequately drained. Parking stalls shall be 2.74 meters by 5.64 meters (9 feet by 18.5 feet). Paint markings shall be 100 mm (4 inches) in width. Traffic isles shall be 7.315 meters (24 feet) in width.

(d) Parking area drainage shall sheet flow to inlets then into the storm collection system. Parking area slopes shall be adequate to provide

proper drainage. Drainage shall not sheet flow off the pavement into the grassed area.

(e) Parking area design shall conform to AFM 88-7, Chap. 5. Parking stalls and access drives shall be asphalt pavement with graded crushed aggregate base course. Pavement structure thickness shall be in accordance with TM 5-822-5, Chapter 3. The pavement structure shall be designed for a 20-year pavement life. As a minimum, the Design/Builder shall provide 1-1/2 inches of asphalt and 6 inches of aggregate base.

(f) The Design-Build Contractor shall provide area lighting for the parking area as described in Section 7.

3.6 SIDEWALKS

(a) Connections to existing concrete pavements shall be accomplished by saw cutting the adjacent existing pavement.

(b) Sidewalks shall be a minimum 1.83 meters (6 feet) wide. Sidewalks shall be widened as necessary to meet building entrance and exit way widths. Sidewalks shall be wire mesh reinforced concrete with a minimum nominal thickness of 100 mm (4 inches) with 2,109,300 kilograms per square meter (3000 psi) compressive strength. Contraction joints shall be spaced at 1.83 meters (6 feet) on center and expansion joints shall be placed at 15.24 meters (50 feet) on center and at the intersection of walks and curbs. Minimum cross slope on sidewalks shall be 2 percent.

(c) Ramps shall be provided for handicapped access. Site access for the physically disabled shall be as required by ADAAG, UFAS and FS 795.

(d) Provide an ample functional system of walks connecting structures, operational areas, parking areas, streets and other walks as pedestrian traffic demands. Design of pedestrian walks shall be in compliance with TM 5-803-5, TM 5-803-14, TM 5-822-2, and criteria presented herein.

(e) Walks paralleling buildings shall be located beyond the eave drip line and at least 1.5 meters (5 feet) from the foundation. Walks paralleling parking areas shall abut the back of the curb.

3.7 GRADING

(a) Finished Floor Elevations: A building's finished floor elevation shall be a minimum of 150 mm (6 inches) above the highest point of the adjacent outside finished grade (excluding the aircraft ramp to the facility), unless there is an overriding technical reason to deviate.

(b) Finished grade shall slope a minimum of 4 percent away from the new building for a distance of 2 meters (6 feet) with the exception of the aircraft hangar access apron which shall be graded as described below.

(c) Roads, Streets, and Access Drives: Gradients for roads, streets and access drives shall be as outlined in TM 5-822-2. Grade changes in excess of 1% shall be accomplished by means of vertical curves. The length of vertical curves shall be determined in accordance with TM 5-803-14, and TM 5-822-2. Profiles are mandatory for vertical control of centerline gradients.

(d) Parking Areas: Pavement grades shall provide positive surface drainage with a 1-% minimum slope in the direction of drainage. Slope grade in direction of parking shall be 1-1/2% maximum for 90-degree parking, 1%

maximum for 60- and 45-degree parking. Slope grade perpendicular to direction of parking 5% maximum for bituminous or concrete surfaces.

(e) Walks: The grade of walks shall be in accordance with TM 5-803-14. Steps in walks should be avoided, but when used shall be in compliance with TM 5-822-2. Walks and ramps serving facilities that are to be accessible to and usable by the physically handicapped shall meet the requirements of the Uniform Federal Accessibility Standards.

(f) Airfields: Gradients shall be IAW UFC 3-260-01.

(g) Finish Grade Contours and Spot Elevations: Finish grade contours at 0.25-meter (1 foot) intervals and spot elevations shall be provided to construct all site development features to elevations within the above grading criteria and tolerances as specified in the guide specifications. Spot elevations on the drawings should be sufficient so that interpolation between contours is not required for structures, grading or paved areas; some examples are: corners of paved areas, low points, high points, flow lines of swales or ditches, changes in degree of slope and grading at corners of buildings to ensure positive drainage away from the building. The use of cut or fill symbols in lieu of finish grade contours is not permitted.

3.8 AIRFIELD PAVEMENT

(a) General: The design of the pavement structure shall be accomplished by the Design-Build Contractor. All airfield, parking, service vehicle and other pavements shall be rigid pavement. Flexible pavement shall not be permitted for use.

(b) A concrete joint layout plan shall be required for all concrete pavements. Joint spacing, joint types, and joint grading shall be shown. Concrete pavement shall be non-reinforced except for odd shaped slabs. The number of joints shall be kept to a minimum by using the greatest joint spacing which will effectively control cracking. The maximum length to width ratio of the slabs shall be 1.25. Joint sealant type shall be preformed compression seal.

(c) Rigid Pavement: Design and details of construction of rigid pavement shall be in accordance with UFC 3-260-02. The design shall also be performed utilizing the Pavement-Transportation Computer Assisted Structural Engineering (PCASE) software program developed by the Airfield & Pavements Division, Engineering Research and Development Center, Waterways Experiment Station. The software program is available at www.pcase.com.

(d) Design Criteria: The hangar access apron pavement shall be designed as Medium Load pavement and Class C Traffic area.

(e) An expansion joint(s) shall be provided between the hangar and the new aircraft apron, and between the new apron and the existing concrete airfield ramp.

(f) Existing concrete pavement that is removed and replaced shall match the existing pavement section.

3.9 AIRCRAFT APRON PARKING AND TAXILANE STRIPING

To accommodate the movement of aircraft to the hangar some of the existing aircraft parking positions will be lost on the apron. The total number of positions to be demolished for both hangars are limited to three C-141 and

three C-130 positions. The apron shall be restriped to accommodate towing C-5 aircraft to the hangar from the taxilanes east of the site. A taxilane shall also be provided to tow C-130 aircraft south of the hangar. Since aircraft are being moved by towing the design may provide for a minimum wingtip clearance of 7.6 meters (25 feet) from aircraft and facilities. The apron shall also be striped to reroute the vehicle services road in front of the hangar. Existing striping shall be removed by water blasting. The striping plan shall be IAW UFC 3-260-01.

3.10 UTILITIES

(a) Coordination of all site work on the project, including utility work, is the responsibility of the Design-Build Contractor. It is the Design-Build Contractor's responsibility to confirm the specific locations of the existing utilities and to design and construct new utility services for the new buildings. All utilities, including electrical service, telephone and cable TV, shall be installed underground. New underground utility lines, including appurtenant structures such as valve boxes, manholes, vaults, etc. shall not be located under pavement, road shoulders or drainage ditches to the maximum extent practicable. Unless otherwise approved, placing utilities and culverts under existing roads shall be by jack and bore.

(b) Backflow prevention valves are referenced in Paragraph 6.0 of this section. Post indicator valves, transformers, electric switches, telephone/cable boxes, manholes, irrigation pump and controller, etc. shall be located in locations not immediately apparent to the facility users or personnel passing by the site. New utility lines shall not be located within 5 meters (15 feet) of the footprint of any future building as shown on the site plan.

(c) Unless otherwise specified, all utility outages shall be accomplished between 1800 Friday and 0600 Monday. All outages shall be coordinated in writing through the Government with written approval.

(d) No physical connections shall exist between sewer and water supply systems. Sewer and water lines shall be at least 3.05 meters (10 feet) apart horizontally, except where the bottom of the water pipe is at least 300 mm (12 inches) above the top of the sewer; the horizontal spacing may be a minimum of 1.83 meters (6 feet). Where conditions require a sewer to cross above a water line, the sewer shall be constructed of cast iron, steel, or other pressure pipe for 3.05 meters (10 feet) each side of the crossing and without the occurrence of a sewer pipe joint immediately above the water pipe. The cover for sanitary sewers shall be at least 762 mm (30 inches) deep to protect the pipe from superimposed live loads of ordinary traffic.

(e) Roads and driveways shall not be crossed by open cut unless approved. Wherever boring is impractical, street crossings shall be limited to three days maximum for any utility crossing roadway (including trenching, compaction, and replacement of existing pavements). Design-Build Contractor shall provide steel matting sufficient to carry traffic loading over excavated area.

(f) All excavations, trenches, open manholes, etc., shall be properly shored, braced, barricaded or guarded. Warning lights or other illumination maintained from sunset to sunup shall be placed at all excavations that are adjacent to pedestrian or vehicle thoroughfares.

(g) Design-Build Contractor personnel shall not enter manholes, tunnels, tanks, or confined spaces until such entry complies with the requirements of OSHA 1926.21 (6)(I).

(h) Utility lines shall be marked with plastic marking tape. Plastic marking tape shall be acid and alkali-resistant polyethylene film, 150 mm (6 inches) wide with minimum thickness of 0.01 mm (0.4 mil). Tape shall have a minimum strength of 12.5 MPa (1800 psi) lengthwise and 10.5 MPa (1500 psi) crosswise. The tape shall be manufactured with integral wires, foil backing or other means to enable detection by a metal detector when the tape is buried up to 1 meter (3.2 feet) deep. The tape shall be of a type specifically manufactured for marking and locating underground utilities. The metallic core of the tape shall be encased in a protective jacket or provided with other means to protect it from corrosion. Warning tapes shall be installed directly above all buried pipes or wires, at a depth of 450 mm (18 inches) below finished grade. Tape color shall be as specified below and shall bear a continuous printed inscription describing the specific utility.

Tape Color:

Red:	Electric
Orange:	Telephone, Telegraph, Television, Police, and Fire Communications
Blue:	Water Systems
Green:	Sewer Systems
Yellow:	Gas, Dangerous Materials

(i) In addition to the plastic marking tape, tracer wire shall also be provided for all new underground utilities. Tracer wire shall be provided for all pipelines, including force mains but excluding storm drain and sanitary sewer lines. Tracer wire shall be provided for all electrical and communication conduits and direct buried cables. Tracer wire shall be installed on the bottom of the trench just to one side of where the pipe, conduit, or cable contacts the trench bottom. The wire shall run continuously between and terminate at valve boxes on water and gas lines, regulator stub-ups on gas lines, sprinkler heads and valve boxes on sprinkler system lines, panel boxes on electrical lines, and other such aboveground appurtenances. Each end of the wire shall have an additional length of at least 0.6 meters (2 feet) coiled up in the appurtenance. Tracer wire shall be No. 10 AWG Cu with nicked TW insulation and of a type specifically manufactured for locating underground utilities. Insulation shall be solid yellow in color. Tracer wire shall be subject to approval by the Contracting Officer.

(j) Potable water source, sanitary sewer, and industrial waste lines, gas, steam, condensate, electric and communication shall be connected to base utility systems. Refer to Sections 6.0 and 7.0 for specific mechanical and electrical requirements, respectively.

(k) Any utilities or equipment that need to be relocated to construct the facility shall be accomplished in such a manner as to minimize the impact on the surrounding area.

(l) Utility structures shall be designed to accommodate the traffic loadings for the area in which the structures are placed.

(m) Area master meters shall be provided for water, gas and electrical utilities. Water, electrical, and natural gas meters, and lift stations shall transmit usage data to the existing Robins AFB SCADA system. Water, eletric, and natural gas are transmitted via telephone line, lift

stations for IW and sanitary are by radio. Meters, interface devices and programming of the existing host shall be furnished as required to accomplish complete utility metering and remote usage monitoring as required by the installation's utility managing agency.

(n) The covers for all utility structures and valve boxes shall be clearly and permanently marked to indicate the type of utility. The marking shall be cast or welded onto the cover. If the cover is steel, the marking shall be welded and then the entire cover shall be galvanized.

3.11 WATER

(a) The Design-Build Contractor shall design and construct the new water supply utility services for the new facility. The Design-Build Contractor shall provide water service lines, new water distribution lines (as required), and connection to the existing water mains. The water facilities shall be designed and constructed in accordance with the criteria contained herein. Placement of a buried utility main under a new building shall not be allowed. Minimum earth cover for the new utility lines shall not be less than 915 mm (36 inches). Every effort shall be made to place waterlines with cover depths between 915 mm (36 inches) and 1,220 mm (48 inches) to minimize congestion at a uniform depth.

(b) The Government anticipates that the Design-Build Contractor will connect the new water laterals to the existing water distribution system and that sufficient quantity will be available for domestic and industrial uses. The design of the water distribution mains and service lines shall provide adequate quantity at sufficient pressure for domestic use. Fire protection is not considered a domestic use. The Design-Build Contractor shall determine minimum pressures in accordance with applicable plumbing and fire protection criteria.

(c) The mains shall be designed and installed in accordance with NFPA 24 and applicable American Water Works Association (AWWA) standards. Water mains shall follow existing streets or utility corridors. The design shall limit installation beneath pavement.

(d) Design of the service lines shall be in accordance with the National Plumbing Code and applicable AWWA standards. A curb stop or valve shall be installed near the point of connection to the main. Water service lines shall be equipped with suitable meters. Metering of fire service lines is not required.

(e) The Design-Build Contractor should verify that the pressure, quantity, and quality of the existing water supply are adequate to support all equipment within the new facility. If they are not adequate, the facility design should include the items necessary to provide the required pressure, quantity, and quality; i.e. booster pumps, water softeners, etc.

(f) In lieu of the requirements in the Robins AFB Base Facility Standard, water lines shall be ductile iron. The interior of potable water lines shall be IAW AWWA standards.

(g) The Design-Build Contractor shall have an independent test company test and certify the operation of each back-flow preventer as referenced in Paragraph 6.0.

(h) Interior and outside fire protection shall be designed in accordance with MILITARY HANDBOOK 1008C (MIL-HDBK 1008C) and Engineering Technical Letter

02-15 (ETL 02-15). Fire flow test data dated 2-11-03 from a hydrant in the vicinity of the site areas follows:

Hydrant No. F35

Static pressure = 468 kPa (68 psig)
Residual pressure = 414 kPa (60 psig)
Flow = 70.0 L/s (1,110 gpm)

From this data and the specific fire protection requirements, the Design-Build Contractor shall determine the need for additional water supply components such as fire pumps, water storage, or new connection to off-site water mains (perhaps several blocks from the building site).

(i) The Design-Build Contractor shall provide the required water flow and pressure for the interior and outside (hose stream) demand. Fire pumps and storage shall be provided as required to meet the required water demand. Connection to off-site water mains shall be considered the most desirable solution to water supply needs. Water storage (if required) shall be designed and installed in accordance with AWWA D100.

(j) The fire sprinkler supply line shall include a post indicator valve with a tamper switch wired to the building fire alarm panel.

(k) The Design-Build Contractor shall provide fire hydrants around hangar IAW ETL 02-15 and the hydrants shall be protected by bollards.

(l) Refer to Section 9 for fire protection requirements inside the building.

3.12 SANITARY SEWER

(a) The Design-Build Contractor shall design and construct the new wastewater utility services for the new facility. The Design-Build Contractor shall also provide new wastewater building laterals, new sewage mains (as required), and connection to the existing sanitary sewerage system. The sewage facilities shall be designed and constructed in accordance with the criteria contained herein. Placement of a buried utility main under a new building shall not be allowed. Minimum earth cover for the new utility lines shall not be less than 680 mm (27 inches).

(b) The wastewater collection and conveyance system shall be designed in accordance with the Water Pollution Control Federation Manual of Practice No.FD-4, Design of Wastewater and Stormwater Pumping Stations, and No. FD-5, Gravity Sanitary Sewer Design and Construction. In addition, the designer shall comply with specific State and local regulations that apply.

(c) If a sewage pump station is necessary, the Design-Build Contractor shall provide (as a minimum requirement) a duplex submersible sewage pump station with a 1,524-mm (60 inch) minimum-diameter reinforced concrete wet well, with aluminum cover. The pumps shall be manufactured by Flyght. All electrical components and controls shall be included. The lift station shall also include SCADA communication compatible with Robins AFB SCADA system, level sensor rod, fenced enclosure or lockable lid for wet well and controls, rails for pump removal, and hoist beam or apparatus. Level floats shall not be used. A flow meter shall be provided and shall transmit data through the SCADA. SCADA frequencies are: TRANS M941.49375, M941.48125; REC M932.49375, M932.48125.

(d) The wastewater conveyance system shall comply with all the above requirements and shall be compatible with the wastewater to be conveyed.

The materials specified shall withstand the effects of the wastewater and not deteriorate as a result of pollutants in the wastewater.

(e) In lieu of the requirements in the Robins AFB Base Facility Standard, sewer gravity lines outside the building shall be PVC and force main lines shall be ductile iron pipe.

(f) Regardless of sewage quantity and for maintainability, the minimum size pipe provided shall be 152 mm (6 inches) for building connections and 203 mm (8 inches) for all other sewers. Pressure pipe may be less than 152 mm (6 inches).

(g) Adequate manholes and clean-outs shall be provided for maintainability.

(h) Crossing potable water lines and sewage lines shall be installed IAW AFM 88-10, Chapter 6.

3.13 INDUSTRIAL WASTE

(a) An industrial waste collection system must be designed to accommodate industrial waste generated by the Corrosion Control Paint Facility. A lift station is included in the scope for the Depaint Facility referenced in Section 01013. Placement of a buried utility main under a new building shall not be allowed. Minimum earth cover for the new utility lines shall not be less than 680 mm (27 inches).

(b) The industrial wastewater collection and conveyance system shall be designed in accordance with the Water Pollution Control Federation Manual of Practice No. FD-4, Design of Wastewater and Stormwater Pumping Stations, No. FD-5, Gravity Sanitary Sewer Design and Construction, and AFM 88-11 volumes 1 and 2. In addition, the designer shall comply with specific State and local regulations that apply.

(c) Industrial waste piping shall be high-density polyethylene (HDPE). The pipe shall be pressure tested to 1,103 kPa (160 psig). The SDR for any gravity portions of the system shall be the same as the respective pressure pipe. The piping will transport fluid wastes generated in Corrosion Control Paint Facility to the existing Industrial Waste collection system illustrated on the site plan adjacent to Building 54. The connection to the Industrial Waste force main shall be made downstream of the Industrial Waste Pump Station No. 6. The existing Industrial Waste Lift Station No. 6 is equipped with two ABS pumps, Model AF90-4-2510-4, 175 gpm, TDH 76’, 12 Hp, 460 V 1750 rpm, constant speed drives.

(d) Wastes shall be identified, both in characteristics and quantities, in project design analysis, and compared to the capabilities of the industrial wastewater treatment plant.

(e) Materials for industrial waste drains, sewers, tanks, pumps, and other features shall be carefully selected for suitability based on worst case expected waste characteristics. Once selected, these materials shall be clearly and thoroughly specified in project specifications. Material substitutions after completion of design is not acceptable.

(f) Where necessary, pretreatment at the source shall be provided. This may include physical, chemical, or a combination pretreatment. Flammables and troublesome solids shall be removed at the source.

(g) The Design-Build Contractor shall provide (as a minimum requirement) a duplex submersible sewage pump station with a 1,524-mm (60 inch) minimum-

diameter reinforced concrete wet well, with aluminum cover. The pumps shall be manufactured by Flyght. All electrical components and controls shall be included. The lift station shall also include SCADA communication compatible with Robins AFB SCADA system, level sensor rod, fenced enclosure or lockable lid for wet well and controls, rails for pump removal, and hoist beam or apparatus. Level floats shall not be used. A flow meter shall be provided and shall transmit data through the SCADA. SCADA frequencies are: TRANS M941.49375, M941.48125; REC M932.49375, M932.48125. The pump shall be sized to accommodate flows from both the Paint Hangar and the future wash rack by others that will be placed within the aircraft apron in front of the De-Paint Hangar. The wash rack will have peak flows of 120 gpm.

3.14 STORM DRAINAGE

(a) The Design-Build Contractor shall evaluate the flow of storm water runoff to and from the site and ensure that the flow of water will be properly moved from the site to the storm drainage system.

(b) Building downspouts shall connect to an underground storm drain collection system.

(c) The site storm drainage system shall be designed for a 10-year return storm frequency. No ponding shall occur for the 10-year event. Storm drainage system design shall be checked for a 100-year return event to insure no flooding or adverse impacts occur down stream. Storm drainage design shall be in accordance with TM-5-820-4 and AFM 88-5.

(d) The storm drain collection system may consist of grassed swales, concrete inlet drop or curb inlets, concrete headwall and pipe systems. The proposed system shall tie to the existing grassed ditches or pipe systems. Minimum pipe velocities shall be 0.6 m/s (2 feet per second) and the maximum shall be 1.5 m/s (5 feet per second) with outlet erosion protection. The minimum pipe size for an open pipe system shall be 0.46-meter (18 inches) and 0.38-meter (15 inches) for a closed system.

(e) The allowable pipe types shall include concrete pipe, Type III or IV, and fully coated corrugated metal pipe as required. Pipe joints shall be water tight with gaskets.

(f) Concrete inlets/catch basins may be poured in-place or corrugated and precast concrete. Metal grates or manhole covers shall be galvanized. Cast or ductile iron manhole covers and grates may also be used. Basins shall have 75-mm (3-inch) weepholes cast into the walls. The exterior of the weep holes shall receive a 6-mm (1/4-inch) wire mesh with a 300-mm (12-inch) width belt of crushed rock. Precast manhole or inlet rings shall connect with industry standard gaskets. Storm drain pipes shall be grouted into the concrete structures to provide a watertight connection.

3.15 GAS DISTRIBUTION SYSTEM

(a) Provide a gas distribution system complete with master meter connected to the existing system and designed in accordance with local codes, utility company requirements, and installation requirements. Gas distribution system shall comply with the requirements of NFPA 54, National Fuel Gas Code. Connection to existing gas distribution system shall be made at the location determined by the Design-Build Contractor. Natural gas main entrance to RAFB is located near Bldg 54. Gas main pressure is 414 kPa (60 psig) and shall be considered to have adequate capacity to serve this facility. Final tie-in point and gas flows shall be coordinated during detailed design. Where new structures are located above existing gas

mains, existing gas mains shall be relocated. The Design-Build Contractor shall bear the cost of installation and relocation of all utilities. When connecting to existing steel piping system, provision shall be made to ensure that the integrity of the cathodic protection is not compromised. Shutoff valves shall be polyethylene (Rockwell) and shall be provided in a valve box on the exterior of the building. A gas regulator shall be provided, located at least 4.6 meters (15 feet) from the air conditioning system equipment. The regulator shall accommodate both natural gas and propane-air. Gauges shall be provided on both sides of the regulator to measure PSI-Gauge on the high side and inches-water on the low side. The building service entrance shall be installed at a height sufficient to allow for installation of the gas meter. Installation of gas piping shall be in accordance with ANSI B31.8, Gas Transmission and Distribution Piping Systems. UFGS Section 02556 GAS DISTRIBUTION SYSTEM shall be the basis for the gas distribution system.

(b) Drips shall be installed at the low points immediately following reduction from high-pressure to medium-pressure (at supply points) and at occasional low points throughout the system to provide for blowing out the lines.

(c) Plug valves shall be installed so that interruptions to service can be confined to the building.

(d) Lines shall not be placed under any buildings. Lines shall be placed with a minimum of 610 mm (24 inches) of earth cover. Protective casings shall be provided to protect lines from superimposed street or heavy traffic loads. Tracer wire shall be installed with polyethylene piping. Tracer wire shall be terminated in valve box and at riser. The Design-Build Contractor shall relocate any portion of the existing gas main required to construct the new facility to comply with the directives found in this paragraph.

(e) Materials and appurtenances shall be free of defects and suitable to accomplish the stated objectives of gas distribution systems. Pipe shall be polyethylene type PE 3408 with an SDR of 11 conforming to ASTM D 2513, thermoplastic gas pressure pipe, tubing, and fittings, or with fitting complying with either ASTM D 2513, ASTM D 3350, or ASTM D 2683. If pressure exceeds PE 3408 capability, ASTM A53B Carbon Steel Pipe (minimum schedule 40) shall be used. All above ground or exposed piping shall be ASTM A53B carbon steel. Below ground piping shall be protected IWA Robins Base Facility Standards. Connections to metal pipe shall comply with American National Standards Institute (ANSI) B16.5 or manufacturer's recommended standards.

(f) Prove that the entire system of gas mains and service lines is gastight by an air test, in accordance with ASME B31.8. The test shall continue for at least 24 hours between initial and final readings of pressure and temperature with the initial reading at least 1 hour after full test pressure.

3.16 COMPRESSED AIR SYSTEM

(a) Provide a compressed air distribution system connected to the existing system and designed in accordance with local codes and installation requirements. Connection to existing compressed air distribution system shall be made at the location determined by the Design-Build Contractor. Where new structures are located above existing compressed air lines, existing compressed air lines shall be relocated. The Design-Build Contractor shall bear the cost of installation and relocation of all utilities. A pressure-regulating valve shall be provided at the point of

use to maintain operating pressure. Installation of compressed air piping shall be in accordance with ANSI B31.8, Gas Transmission and Distribution Piping Systems and ASTM D 2774 Standard Practice for Underground Installation of Thermoplastic Pressure Piping.

(b) Lines shall not be placed under any buildings. Lines shall be placed with a minimum of 2 feet of earth cover. Protective casings shall be provided to protect lines from superimposed street or heavy traffic loads. Tracer wire shall be installed with piping. Tracer wire shall be terminated in valve box and at riser. The Design-Build Contractor shall relocate any portion of the existing compressed air main required to construct the new facility to comply with the directives found in this paragraph.

(c) Materials and appurtenances shall be free of defects and suitable to accomplish the stated objectives of compressed air distribution systems. Pipe shall be polyethylene type PE3408 with a SDR of 7.3 conforming to ASTM D 2513, thermoplastic gas pressure pipe, tubing, and fittings, or with fitting complying with either ASTM D 2513, ASTM D 3350, or ASTM D 2683. Connections to metal pipe shall comply with American National Standards Institute (ANSI) B16.5 or manufacturer's recommended standards.

(d) Prove that the entire system of gas mains and service lines is airtight by an air test, in accordance with ASMEB31.8 and manufacturer’s recommendations. The test shall continue for at least --- hours between initial and final readings of pressure and temperature with the initial reading at least 1 hour after full test pressure.

3.17 STORMWATER POLLUTION PREVENTION PLAN

A Stormwater Pollution Prevention Plan (Best Management Plan) shall be designed and included in the design submittals shown in Section 1012. The plan shall be in accordance with The Manual for Erosion and Sediment Control in Georgia. The approved plan shall be onsite at all times for inspection by EPA, Georgia Department of Natural Resources (GA DNR), and Robins AFB environmental personnel. All activities in the approved plan shall be implemented. The Design-Build Contractor shall control erosion and sedimentation during and after construction. Sedimentation of adjacent sites or downstream ditches will not be permitted.

3.18 GEOGRAPHIC INFORMATION SYSTEM (GIS) DATA

Planimetric data created, modified, or updated as a result of services provided in this RFP shall be provided to the Government in an ESRI GIS format. Data shall be submitted in conformance to the SDSFIE 2.1 data standards. Appropriate Federal Geographic Data Committee (FGDC) compliant metadata is also required. Job duties that are likely to occur include, but are not limited to, CADD to GIS data conversion, data documentation (metadata), data creation, data updates and deletions (additions, movement or removal of infrastructure associated with the site), data integration with any existing GIS databases or data warehouses and map production. GIS Deliverables for this project are likely to include hard copy maps and associated electronic map files in the above mentioned GIS format, newly created or updated GIS databases, metadata, and any other documentation deemed necessary.

4.0 ARCHITECTURAL DESIGN CRITERIA

4.1 SUMMARY

This section provides general Architectural design criteria to be utilized for proposal and design purposes.

4.2 DESIGN REQUIREMENTS

4.2.1 Requirements and Objectives

(a) Requirements: The Air Force’s primary requirement for this project is to design and construct a quality facility to efficiently and effectually paint medium and large aircraft (optimize for C-5 aircraft). The facility shall provide the necessary space to perform painting operations, contain the necessary shop and support space, and house the appropriate administrative personnel to enhance mission effectiveness and protect the environment. The design and construction shall incorporate quality materials and promote energy conservation that will be of value to the Air Force in the foreseeable future.

Robins Air Force Base’s primary requirement is to construct an environmentally safe aircraft painting facility to perform corrosion control and ensure that Robins Air Logistics Center can support mission readiness of all presently assigned aircraft. This facility must incorporate the most modern painting technologies.

(b) Objectives: A number of objectives shall be met to achieve the goal of this project. The first objective is to construct a new, energy efficient building to house the equipment, provide adequate space and a modern work environment for personnel to paint aircraft. The contractor shall design the facility taking into account maintenance including access requirements (with tools, materials, equipment, etc.) to equipment (freight elevator, ladders, doors, etc.) and piping (overhead valves), pipe routing (rack on walls, etc.) and ensuring that maintenance costs are have been economized.

The second objective is to minimize the impact of construction in this area. Outages to tie into existing utilities, and all construction work must be accomplished in such a manner as to allow work to continue in the existing facilities. Any utilities or equipment that need to be relocated to construct the facility shall be accomplished in such a manner as to minimize the impact on the surrounding area.

The Air Force's objectives are to deliver a project on time, within available funds and in a safe manner, which satisfies the user's needs.

4.2.2 Project Narrative

(a) Paint Facility: The facility is designed for the painting of large and medium aircraft, including the C-5 and the C-130 and shall contain a hangar floor for aircraft painting processes, administrative space, building support, production support, and special support areas. The hangar floor shall be large enough to paint a C-5 aircraft with minimum clearances and space where the aircraft painting process can be used to paint aircraft. The administrative space shall consist of seven private office spaces, conference room and copier/fax/storage rooms. The building support area includes space for mechanical room (including supply and return plenums), fire protection room, electrical room, communications room, and a boiler room (there is a chiller room in the process cooling option). The production support area shall consist of a chemical storage and dispensing room, a paint storage room, a paint mixing room, a solvent storage room, a stencil room, equipment storage room, and respirator cleaning room. The special support areas shall consist of space for a break room, clean and contaminated locker areas

(including showers), restrooms, janitor closet, and the Issue Room/Pharmacy. An air shower shall be installed as part of the decontamination process at any transition point between the contaminated areas and the clean areas. The contaminated areas include the Hangar floor and the Production Support areas. The clean area shall include administrative space and special support areas, excluding the contaminated locker area.

This facility's programmed area is 9850 SM (106,025 sf). This steel framed paint facility will be sited to be next to the depaint facility of similar size.

The new facility shall incorporate the following design concepts:

- Shop layout shall provide efficient workflow to reduce personnel costs. (See Volume 3 of 3, Appendix Q)

- The building shall incorporate energy conservation through the use of efficient wall and roof insulation systems.

- The building shall promote low maintenance by utilizing durable materials for construction (20 years for roof, siding, and main electrical/mechanical components, etc.).

- The building shall meet ADA requirements for the following spaces: Restrooms, break area, and office/administrative areas.

*8

- Clearances (included clearances from equipment, i.e eight future teleplatforms (aft, fore, and along each wing), DMSS equipment, parked support equipment, etc.): The Aircraft sizes for the hangar floor are as follows (includes clearances from equipment, i.e., teleplatforms, DMSS equipment, parked support equipment, etc.):

	WING SPAN	LENGTH	HEIGHT
KC-135	39,807mm (130'-7")	41,514mm (136'-2")	12,711mm (41'-8")
C-17	52,200mm (171'-3")	53,040mm (174'-0")	16,790mm (55'-1")
C-130	40,410mm (132'-7")	34,370mm (112'-9")	11,660mm (38'-3")
C-5	67,870mm (222'-8.5")	75,550mm (247'-10")	19,850mm (65'-1.5")

Clearances for largest aircraft shall be as follows:

Horizontal (C-5)-
Wing tips – 6,096 mm (20'-0") min. clear area (Min. 3048mm (10'-0") at hangar door)
Aircraft Nose – 6,096 mm (20'-0") min. clear area

Aircraft Tail (nose-in)– 6,096 mm (20'-0") min. clear area
Aircraft Tail (tail-in) = 3,048 mm (10'-0")
Engines – 6,096 mm (20'-0") min. clear area

*(6)
Vertical (C-5)- 3,048 (10'-0") mm clear area for aircraft on jacks
For a tail-in configuration, the minimum vertical clearance shall be 1524mm (5'0") to a draft curtain that is oriented perpendicular to the axis of the aircraft. For a draft curtain that is parallel to the axis of the aircraft, the minimum vertical clearance shall be 3,048mm

(10’0”).

(b) Existing Buildings to Be Demolished: Buildings 53, and 56 are to be demolished in their entirety and site completely cleared of any sidewalks, foundations and associated roadways for new paint facility. Building 53 is a pre-engineered metal building with concrete slab approximately 15,240 mm x 15,240 mm (50’ x 50’) in size with an eave height of approximately 3658 mm (12’-0”). Building 56 is a CMU building on concrete slab approximately 21,336 mm x 45,720 mm (70’ x 150’) in size with an eave height of approximately 3658 mm (12’-0”).

(c) Existing Building 43 is to be left in tact and required clearances maintained between new facilities.

4.2.3 Space Requirements

The areas shown below are for guidance in preparing the project. The design-build contractor shall be responsible for determining the actual amounts of space required for each area based on criteria. Design-Build Contractor has discretion to add additional spaces if required, (i.e. chemical mix control room, communications closet, etc.).

Space Type	Area SM (sf)	Remarks
Hangar Floor		Paint Area with necessary clearances as needed around C-5 aircraft for the painting process. Hangar area need not be a single cubical shape. C-5 aircraft may enter hangar either nose-in or tail-in (tail-in is preferred and will be part of the evaluation). Space required for hydraulic mule storage within hangar floor area.
Hangar including Door Pockets	5665 SM (61,000 sf)	
ADMINISTRATIVE	150 SM (1615 sf)	Office space for private offices (one WS-12, five WS-9), a technical order office, a conference room for 12 to 15 people and fax/copier room. Conference room and one office (WS-9) to have visual access to hangar floor.
BUILDING SUPPORT		
Electrical Room	75 SM (800 sf)	
Mechanical Room (including supply/return plenums, air compressors, and boilers, etc.)	1000 SM (10,760 sf)	
Fire Protection Room	45 SM (485 sf)	
Communications Room	10 SM (110 sf)	Communications equipment
Chiller Room	*390 SM *(4,200 sf)	*(Process Cooling option)

Space Type	Area SM (sf)	Remarks
Boiler Room	85 SM (900 sf) *290 SM *(3,150 sf)	*(Process Cooling option)
PRODUCTION SUPPORT		
Chemical Storage & Dispensing	350 SM (3,770 sf)	*8 Provide space for 19-cubic-meter (5,000 gal) acid tank, 3.8-cubic-meter (1,000 gal) alodine tank, 19-cubic-meter (5,000 gal) detergent tank (maintain 54 C +/- 2 C (130 F +/- 3 F) temp.), 19-cubic-meter (5,000 gal) hot water tank (maintain 54 C +/- 2 C (130 F +/- 3 F) temp.) including pumps, mixers, piping and 1.5M (5 ft) maintenance clearance on at least two sides of all equipment. Provide space for ten 208-liter (55-gal) drums. Dispensing needed from hose reels along hangar walls ~~and teleplatforms~~. This space needs forklift and truck dock access.
Paint Storage Room	80 SM (860 sf)	Storage for enough paint for two C-5 aircraft. This space needs forklift and truck dock access.
Paint Mixing Room	40 SM (430 sf)	(Hazardous Material)
Solvent Storage	100 SM (1080 sf)	Storage for solvent. (Hazardous Materials)
Stencil Room	50 SM (540 sf)	Storage of stencil items
Equipment Storage	65 SM (700 sf)	Storage for 25 paint carts (800mm x 1600mm)(32” x 64”); bench space for repairing carts
Respirator Cleaning Room	20 SM (215 sf)	Room to include sink, water, respirator washer and dryer and an inspection/storage area. Allow for up to 10 people to be cleaning respirators at one time.
Initial Accumulation Point	10 SM (110 sf)	Collection of contaminated solvent, rags, and other similar small items. Up to three 208-liter (55-gal) drums at any time. This area shall be located in the hangar floor and will be defined by painted stripe on floor surface.

Space Type	Area SM (sf)	Remarks
SPECIAL SUPPORT		
Break Area	100 SM (1080 sf)	Size for 60 people
Issue Room/Pharmacy	75 SM (800 sf)	Storage for issue gloves, respirators, and other PPE; small quantity paint/solvent; tools; similar items. Provide adequate metal storage shelving. Provide counter with shutter.
Restrooms, Lockers, Showers	210 SM (2260 sf)	Size contaminated and clean locker areas for lockers for 25 women and 80 men, up to 15 and 60 at any one time. Provide toilets, sinks and showers, size per codes occupant count. Provide clean and contaminated locker areas. No toilet facilities shall be in contaminated locker area. Provide air shower between clean and contaminated locker areas and/or toilet area. Toilets shall be accessible from the clean areas (Administrative, Issue Room/Pharmacy, Break Area, etc.) without going through a contaminated area.
Total Maximum	9850 SM (106,025 sf)	

4.2.4 Facility Area Description

The Design-Build offers are encouraged to consider innovative building configurations to accomplish performance requirements, i.e., a “high tail, low wing” hangar bay, single 2-bay facility, the use of an exposed exterior structural system with metal panels on interior side to reduce area, etc.

*(6)
Support areas including: production, building and special support shall be classified as uninhabited as per the United Facilities Criteria (UFC) “DoD Minimum Antiterrorism Standards for Buildings” UFC 4-010-01, dated 31 July 2002.

4.2.4.1 Hangar Floor

(a) Hangar Floor Area: The hangar floor area shall be large enough for the C-5 with 6.096M (20’-0”) clearance needed around the aircraft for the paint Equipment. The following aircraft are to be painted in this dock; C-5, C-17, 767, KC-135, 707, and C-130. The hangar shall have a suspended pre-finished metal panel (steel) ceiling system and shall have draft curtains and zoned for fire protection as required per ETL 02-15. The walls up to ceiling height shall have flat/smooth pre-finished (steel) interior liner panels furred out from structure in accordance with NFPA 33. The floor of the dock area shall have a mineral aggregate floor hardener type finish. See Structural Design Criteria Section 5.0 for concrete slab requirements.

The hangar floor will be equipped with electrically operated sliding hangar doors that can be manually rolled open during loss of power complying with AFOSH Std. 91-100 & 91-501. An electrically powered, roll-up service door will be required for aircraft tow vehicles to exit the hangar floor without the tug passing under any portion of the aircraft and parts movement. Emergency egress exits shall be as required by codes.

(b) Hangar Floor Special Requirements:
*8

A fall protection system shall be provided over the aircraft wings, centerline of fuselage and over the horizontal stabilizer at the tail. Fall arrest system shall consist of six lines per wing, six lines for the fuselage, and one line per horizontal stabilizer. Lines over the wings shall be configured in a splayed pattern to provide maximum coverage. Each line shall have two retractable fall arrest devices. ~~Fall restraint protection shall be provided at the teleplatforms. Teleplatforms shall be installed in the hangar area to access the fuselage and horizontal stabilizer areas for the C-5 aircraft. See Section 6.2.3. for teleplatform configuration requirements. Teleplatform systems shall consist of two overhead platforms that cover the rear portion of the fuselage and two overhead platforms for access to the T-tail and empennage section of the aircraft. Teleplatforms shall be equipped with a fall restraint system. Teleplatform systems and fall arrest system shall not interfere with each other.~~

For “tail-in” alternative configuration, provide a permanent tail stand system with retractable access platforms to access the aircraft vertical and horizontal stabilizer. Tail stand shall be equipped with a fall restraint system. Tail stand clearances from aircraft to structure/retracted platform, etc. are 1219 mm (4’-0”). For tail stand, clearances from aircraft to structure/retracted platform, etc. are 1.3M (4’-0”) horizontally and vertically (unjacked height). The tail stand shall reach the forward point of the vertical empennage. The process intended is:

- Retract all platforms and tow aircraft into dock
- Lower platform to floor level
- Enter platform
- Elevate platform to any point form 1.3m(4’) beneath horizontal
- Stabilizer to bottom of fuselage.
- Extend platform to aircraft
- Strip aircraft while operator lowers platform as work progresses to keep stripping paint at a comfortable working height
- Secondly, provide either a work platform that can enclose around entire top of the horizontal stabilizer or provide access to the fall protection line.

A bridge crane of sufficient capacity shall be installed over the T-tail section of the C-5 aircraft for removal of the horizontal stabilizer. Bridge crane and fall arrest systems shall be compatible and not conflict with each other.

Aircraft jacks shall be provided. Provide six 54,432-kg (60 ton) capacity steel constructed C-5 aircraft adjustable aircraft jacks conforming to Air Force standards (NSN 1730-01-060-9575). Provide level slab at jack locations.

Trench grating shall be designed for aircraft wheel loads.

The hangar floor shall have emergency shower/eyewashes as required by codes. Emergency Eyewash/Showers shall be located per AFOSH Std. 91-100.
*8
Hangar dock shall have pre-finished smooth metal ceiling system suspended from structure. Future teleplatforms, fall arrest systems, and bridge cranes shall be below the metal ceiling. Ceiling height shall be as determined for necessary clearance from aircraft surfaces to bottom of teleplatform, fall arrest systems, and bridge crane support structure.

Provide catwalks as required, with stair from hangar floor, to access and maintain lights. Provide access system to maintain/replace lights. Access system must meet 01010-6.1.1. Type of access depends on whether or not the lights are in the dock or outside the dock.

4.2.4.2 Administrative Space

The administrative area shall consist of seven private offices with space for five first line supervisors (WS-9), one second line supervisor, one technical order office (WS-12), a hazard communications office, conference room for 12 to 15 people, and a space for fax/copier, etc. The user will provide furniture with separate funds at a later time. This area will need general outlets and power for personal computers. All offices and conference room will require connection to computer local area network. Provide four connections (including power and space for tables/chairs) in the T.O. Office or in break room to support DMAPS computers. All areas will require telephone outlets. This space shall have painted gypsum board walls, suspended acoustical ceiling with sound attenuation insulation (per 6.5.12) over. Flooring shall be carpet with rubber base.

There shall be an air shower provided as part of the decontamination process at the transition area between the hangar floor area and the administration space and special support areas including Break Area, Issue Room/Pharmacy, and Restrooms, Lockers/Showers. (Air shower required between contaminated and clean locker areas.)

Air shower shall be a recirculating type air shower with minimum inside dimensions of 915 mm wide (36 inch), 2946 mm (116 inch) long, 2134 mm (84 inch) high and be suitable for a Class 1, Division 1 hazardous location. Unit shall consist of prefabricated sections and be provided with lighting, air blowers, stub-in for fire protection sprinkler head, single point electrical connection, and all operational controls. Air shower enclosure shall be constructed of cold rolled steel with an interior vinyl coating and exterior painted coating. Manually operated doors (2 each) shall be anodized aluminum, minimum 914 mm x 2134 mm (36” x 84”), with clear tempered glass panes. Unit shall provide a minimum of 31 m/s (6000 fpm) velocity of continuously filtered air from two sides and top through adjustable supply nozzles. Return air shall be through a raised floor with removable stainless steel grate for cleaning. Air shall be filtered through a combination of prefilters and high efficiency particulate air (HEPA) filters. The prefilter shall be replaceable fiberglass filters. The HEPA filter shall remove 99.97% of all particles of a diameter of 0.3 micron or larger. Provide a factory installed pressure gauge to measure the pressure drop across the prefilter and HEPA filter. Air flow shall be controlled by an adjustable timer, activated when the entrance door is opened and closed. There shall be no interlock to airflow on the doors.

4.2.4.3 Production Support Area

(a) Chemical Storage and Dispensing: This room shall have the necessary utilities to support chemical storage and dispensing operation on WR-ALC

projected aircraft painting workload. This space shall have painted CMU walls to a minimum height of 3658 mm (12′-0″) and gypsum board over steel studs to roof deck above. No ceiling is required. The concrete floor finish will be a clear hardener/sealer that is compatible with chemicals stored. This room shall conform to appropriate codes, NFPA, IBC, etc. A recessed floor with ramps is preferred over dikes at doors. This space requires forklift and truck dock access.

(b) Paint Storage: This space shall have painted CMU walls to a minimum height of 3658 mm (12′-0″) and gypsum board over steel studs to roof deck above. Ceiling shall be suspended gypsum board at 3658 mm (12′-0″) AFF. The concrete floor finish will be a clear hardener/sealer. This room shall conform to appropriate codes, NFPA, IBC, etc. The paint storage room shall have room for 600 3.8-liter (1-gallon) kits of paint and 450 3.8-liter (1-gallon) kits of primer (two kits per box). Kits are supplied on pallets, sixty boxes per pallet. It is acceptable to have heavy duty shelves to store a second level of pallets. Paint and primer on pallets shall be accessible separately (by forklift) and shall be able to rotate stock. Room shall have five (5) 457mm x 914mm (18″ x 36″) cabinets for spray cans and other small can sizes of paint.

(c) Paint Mixing Room: This space shall have painted CMU walls to a minimum height of 3658 mm (12′-0″) and gypsum board over steel studs to roof deck above. The ceiling shall be suspended gypsum board at 3658 mm (12′-0″) AFF. The concrete floor finish will be a clear hardener/sealer. A recessed floor with ramps is preferred over dikes at doors. This room shall conform to appropriate codes, NFPA, IBC, etc.

(d) Solvent Storage Room: This space shall have painted CMU walls to a minimum height of 3658 mm (12′-0″) and gypsum board over steel studs to roof deck above. No ceiling as required. The concrete floor finish will be a clear hardener/sealer that is compatible with solvents stored. This room shall conform to appropriate codes, NFPA, IBC, etc. A recessed floor with ramps is preferred over dikes at doors. This space requires forklift and truck dock access. The solvent storage room shall have room for eight (8) 208-liter (55-gallon) drums, and shelf space for twenty-four (24) 18.9-liter (5-gallon) cans. This shall be the normal dispensing point for transferring solvents into 0.9-liter and 3.8-liter (quart and gallon) size containers. These smaller containers shall be issued from the pharmacy room.

(e) Stencil Room: This space shall have painted CMU walls to a minimum height of 3658 mm (12′-0″) and gypsum board over steel studs to roof deck above. The ceiling shall be suspended acoustical tile. The floor finish shall be vinyl tile with rubber base.

(f) Equipment Storage: This space shall have painted CMU walls to a minimum height of 3658 mm (12′-0″) and gypsum board over steel studs to roof deck above. No ceiling is required. The concrete floor finish will be a clear hardener/sealer.

(g) Equipment Cleaning Room: This space shall have painted CMU walls to a minimum height of 3658 mm (12′-0″) and gypsum board over steel studs to roof deck above. No ceiling is required. The concrete floor finish will be a clear hardener/sealer.

(h) Respirator Cleaning Room: This space shall have painted CMU walls to a minimum height of 3658 mm (12′-0″) and gypsum board over steel studs to roof deck above. The ceiling is required. The concrete floor finish will be a clear hardener/sealer.

(i) Initial Accumulation Point: This space shall be located within the hangar floor and shall be designated by a painted stripe on the floor.

(j) Paint Booth: Paint booth shall be prefabricated conforming to appropriate codes, i.e., NFPA 33, etc. Paint booth shall be 18M (60 ft) wide x 27M (90 ft) in depth x 7M (23 ft) in height with a 4877 mm (16 ft) high x 9144 mm (30 ft) wide overhead-type door. Paint booth shall be attached to concrete slab.

4.2.4.4 Building Support Area

(a) Mechanical Room: This room contains mechanical equipment including boilers, air compressors, HVAC equipment, etc. This space shall have painted CMU walls to a minimum height of 3658 mm (12′-0″) and gypsum board over steel studs to roof deck above. Provide sound attenuation insulation within gypsum board wall (per 6.5.12). No ceiling is required. The concrete floor finish will be a clear hardener/sealer. Mechanical room requires forklift and truck access. Mezzanines for mechanical equipment may be utilized if required.

(b) Fire Protection Room: This room contains fire protection equipment. This space shall have painted CMU walls to a minimum height of 3658 mm (12′-0″) and gypsum board over steel studs to roof deck above. No ceiling is required. The concrete floor finish will be a clear hardener/sealer.

(c) Electrical and Communications Rooms: The facilities electrical and communications equipment are located in these spaces. These spaces shall have painted CMU walls to a minimum height of 3658 mm (12′-0″) and gypsum board over steel studs to roof deck above. No ceiling is required. The concrete floor finish will be a clear hardener/sealer. These rooms shall be separate spaces. Provide conditioned air as required in the Communications Room.

(d) Chiller Room: This room is for the processed cooling option and contains chillers, pumps, etc. This space shall have painted CMU walls to a minimum height of 3658 mm (12′-0″) and gypsum board over steel studs to roof deck above. Provide sound attenuation insulation within gypsum board wall (per 6.5.12). No ceiling is required. The concrete floor finish will be a clear hardener/sealer. A mechanical mezzanine may be used if required. The chiller room will require overhead door for maintenance access.

(e) Boiler Room: This room contains boilers for the humidity system in the base bid (non-process cooling) scenario. For the process cooling option, this room contains boilers, pumps, etc. This space shall have painted CMU walls to a minimum height of 3658 mm (12′-0″) and gypsum board over steel studs to roof deck above. Provide sound attenuation insulation within gypsum board wall (per 6.5.12). No ceiling is required. The concrete floor finish will be a clear hardener/sealer. A mechanical mezzanine may be used if required. The boiler room will require overhead door of sufficient size for required maintenance access.

4.2.4.5 Special Support

(a) The break area will contain a sink and counter and cabinets. The walls will be painted and the floor shall be vinyl composition or resilient tile. The ceiling shall be suspended acoustical tile at 3048 mm AFF.

(b) Issue Room/Pharmacy: This space shall have painted gypsum board walls and suspended acoustical ceiling at 3048 mm AFF., and VCT flooring with rubber

base. Provide a counter with shutter for issuing items to personnel. The pharmacy area will be used to dispense sealant kits from the freezer, and issue up to 45.4-liter (12-gallon) size containers stored in this room. Total estimated shelving is 9.1 meters (30 linear feet). This room is also an alternate dispensing location for one 208-liter (55-gallon) drum. The issue area requires a total of 91.4 meters (300 linear feet) of shelving (30.5 meters (100 linear feet) of shelf space 1.2 meter (4 feet) wide by 3 levels, reachable by hand) for dry goods. Each row shall be 1066 mm (42 inches) minimum from the adjacent row and shall be accessible from both sides. Fresh material is added from one side, oldest material is issued from the other side.

(c) The restrooms/lockers/shower rooms should be adjacent to each other. The restroom and shower rooms are to be in the clean area. There shall be a separate locker room in the contaminated and clean areas. Restrooms walls shall be moisture-resistant gypsum board or CMU. Restroom perimeter walls shall have sound attenuation insulation (per 6.5.12). Ceilings shall be suspended gypsum board at 2743 mm (9’-0”) AFF min. Perimeter walls of the restroom areas shall extend to underside of the deck above. Ceramic tile shall be provided on restroom walls to a wainscot height of 1220 mm (48 inches) minimum. Walls and ceiling shall be painted with appropriate wet area paint system. Floors shall be ceramic or porcelain tile. At a change of floor finish; terminate all ceramic tile floors at door frames with full-width marble thresholds of coordinating color. Janitor closets shall have a ceramic tile wainscot on all walls and ceramic tile floors. Toilet compartments shall be floor mounted and of stainless steel or solid plastic construction with heavy-duty hardware. Wall-mounted urinal screens shall be securely mounted to the wall with toggle bolts through the inner wall blocking at gypsum board walls and CMU walls. Blocking shall be minimum of 51 mm x 203 mm (2” x 8”) dimensional wood, pressure treated to resist fire. The men’s and women’s restrooms shall be ADA compliant. Lavatories shall be as described in mechanical section and as required by codes.

4.2.5 General Architectural Requirements

(a) General architectural requirements shall conform to Robins AFB Base Facility Standards, Robins AFB Architectural Compatibility Standards and the Savannah District Design Manual for Military Construction.

(b) Permanent maintenance access shall be provided for all elevated mechanical equipment. Access shall be by fixed ladder and platform for equipment 5.8 m (19’-0”) high and lower, stairs and platforms for equipment between 5.8 m (19’-0”) and 9.2 m (30’-0”), and freight elevators for equipment mezzanines higher than 9.2 m (30’-0”). Freight elevator shall be sized for personnel, tools, equipment, etc. Where fixed ladder or stairs are used, a hoist shall be provided to allow transport of equipment and tools to mezzanine or platform level. Provide catwalks for all equipment requiring servicing located above ceilings.

(c) Exterior Wall Construction: Metal siding system shall be a pre-finished metal siding and shall be a factory-insulated panel system or a field-assembled system consisting of metal siding panel and exterior type insulation. Steel panels shall be zinc coated steel conforming to ASTM A 653, G 90 coating designation, aluminum-zinc alloy coated steel conforming to ASTM A 792, AZ 50 or AZ 55 coating, or aluminum-coated steel conforming to ASTM A 463, Type 2, coating designation T2 65. Minimum gauge of pre-finished metal siding shall be 0.70 mm (24-gauge) thick for steel or 20 gauge as required by NFPA 33 if double wall assembly is utilized. Prefinished factory-primed sheets shall be either 1-mil-thick polyvinyldene fluoride or silicone-modified polyester.

Finish shall have a minimum warrantee of 20 years to resist chalking and fading. Color of metal siding shall conform to Robins AFB Architectural Compatibility Standards.

CMU Cavity Wall shall consist of CMU, dampproofing, insulation, and veneer that is in compliance with Robins AFB Architectural Compatibility Standards.

Vapor barrier shall be installed as required at exterior walls with gypsum board and metal stud interior surface.

(d) Roofing Systems:

- Structural Standing Seam Metal Roofing: See Appendix G – Specific Base Wide Technical Specifications for specification SECTION 07416 - STRUCTURAL STANDING SEAM METAL ROOF SYSTEM.

- The color of the roof shall match Robins Base Architectural Compatibility Standards for permissible colors used on the base.

- Minimum slope of metal roofs shall be as stated in Robins AFB Architectural Compatibility Standards. Minimum gauge of standing seam metal roofing shall be as indicated in specification SECTION 07416.

- Roof insulation shall have a minimum U-value in accordance with AF ETL 94-4.

- Built-Up Roofs (BURs): BURs shall be avoided whenever possible in all forms of construction of new facilities as stated in Robins AFB Architectural Compatibility Standards.

- Entire exterior system (roof, walls, gutters, flashing, etc.) shall include a 20 year weather-tightness warranty.

(e) Interior Wall Construction:

- Interior wall construction shall be metal stud and gypsum board in the office/administration areas and CMU (concrete masonry unit) walls/partitions in all other areas to 3658 mm (12’-0”) above concrete slab minimum and metal stud/gypsum board from top of CMU to roof deck if required for separation. CMU shall be bull nosed at door jambs and wall corners. Gypsum board shall be 16 mm (5/8”-inch) and in wet areas shall be moisture-resistant gypsum board. Walls separating functional areas shall be constructed to have proper fire protection rating. Gypsum board shall be impact resistant where required if exposed to potential abuse. Sound attenuation insulation (per 6.5.12) shall be installed in noise sensitive areas; i.e., offices, restrooms, break room, etc.

- Interior wall liner panels in hangar floor area shall be smooth/flat panels (steel) conforming to NFPA 33 and attached to metal stud framing. Wall liners thickness shall be as required by appropriate codes, NFPA, IBC, etc., steel and extend from floor to suspended interior metal ceiling system above. Liner panels shall be 20 gauge if exterior siding adjacent to the paint hangar dock is 20 gauge. If exterior siding used is 24 gauge, then liner panels shall be 18 gauge per NFPA 33. Panels shall have a factory-finish baked-enamel finish.

- Interior metal ceiling system shall consist of liner panels in hangar floor area suspended from structure and shall be smooth/flat attached to metal framing as required. Ceiling panels thickness shall be as required by appropriate codes, NFPA, IBC, etc., steel. Panels shall be factory prefinished.

- Sound Attenuation Insulation (per 6.5.12) shall be located in administration, break room, and restroom walls and ceiling.

(f) Door Systems: Exterior and interior doors shall conform to requirements of Robins AFB Base Facility Standards.

- Door Hardware: Door hardware shall be heavy-duty, bright chrome plated. Exterior door closers shall be LCN Super Smoothee with Cushion Arm stops or equal. All utility exterior doors shall be metal, insulated, flush panel construction with top edges closed flush and sealed against water penetration. All doors in aircraft dock area shall have dust seals. All butts/hinges shall be Stanley FBB212, heavy-duty or approved equal.

- Master Keying and Locks: Robins AFB utilizes the master keying system provided by the BEST Universal Lock Co. Only those cores that are compatible with the BEST master keying system shall be used. Locks shall be supplied with construction cores. Individual locks shall be provided for in all areas except public toilets. Where existing locksets are to be replaced, ensure that the existing cores are turned in to the Base Lock Shop.

- Exterior Doors: All exterior doors shall be insulated metal 1.61 mm (16-gage) factory primed. All egress personnel type exterior doors shall have a vision, safety glass, window with bottom edge 1372 mm (54 inches) from finish floor. Utility room doors shall be flush type. Exterior utility doorframes shall be heavy-duty rated hollow metal with heavy-duty reinforcement at the hardware connections. Entrance doors shall be insulated, tempered safety, full glass and have insulated glass transom lights to provide natural illumination in the hallway or corridor.

- Interior Doors: All interior doors shall be 1.31 mm (18-gage) factory primed except office and conference room doors which shall be 44 mm (1-3/4″) solid core, stainable wood veneer.

- Door Frames: Interior door frames shall be hollow metal construction with corners mitered, welded and ground smooth with factory-installed door silencers. Provide satin stainless steel finish for all hardware throughout the project. Door frames shall be prepared to receive sets of Stanley FBB212 pivot reinforced-type hinges featuring head connections to frame and door or approved equal.

- All door frames located in CMU walls (interior and exterior) shall be mortar grouted solid with the appropriate jamb anchors installed for masonry or drywall construction.

- Hangar Doors: Hangar doors shall be electrically powered sliding type steel framed doors or sliding plenum type steel framed doors. Hangar doors shall be of sufficient size to allow a C-5 aircraft with minimum 3048 mm (10′-0″) clearance at wing tips to enter the hangar floor area. Doors shall be operable up to a wind speed of 22 m/s (50 mph). The hangar doors shall run on steel rails as required, set in a

minimum 28 Mpa (4000 psi) concrete bed with aggregate no larger than 9.525 mm (3/8-inch). Wheels shall be a minimum of 305 mm (12 inch) in diameter and designed to adequately carry the door loads. Wheels shall be fabricated of carbon steel plate. All doors shall begin to move at the same time once the push button has been engaged. Hangar doors shall be operated from both interior and exterior side of the aircraft dock with the exterior operating device being weatherproof and secure. Doors shall provide a manual override of the electrical door contact. Doors shall be fully insulated with U-value in accordance with AF ETL 94-4. The exterior surface shall be pre-finished metal siding. Provide catwalk access system above hangar doors to access mechanical equipment, wherever routine maintenance will occur (IAW 29 CFR 1910.30 and AFOSH Std. 91-501), and if applicable or required. Hangar doors that are to be used as air supply or exhaust plenums shall have on the interior hangar side airflow balancing devices and flat/smooth interior wall liner closure panels conforming to NFPA 33 at non-airflow areas. Doors when in the closed position shall have appropriate seals to accommodate the air supply and exhaust requirements and to prevent outside air infiltration (dust contaminates, etc.).

- Service Doors: Exterior overhead service doors shall be 18-gauge, insulated, factory primed and designed to withstand design wind loads. Interior overhead service doors shall be 1.0 mm (20-gauge) factory type. All rolling doors shall be power operated.

(g) Insulation: U-values for wall and roof assemblies shall be in accordance with AF ETL 94-4 and per Table 11-4A Building Envelope Component Guidelines in weather region 11 per Army TI 800-01.

(h) Windows:

- Exterior windows, frame and glazing, shall conform to requirements of the Unified Facilities Criteria (UFC) DoD Minimum Antiterrorism Standards For Buildings. Exterior glazing shall be insulated with interior pane conforming to DoD Standards and the exterior pane being low-E tinted.

- Interior windows, frame and glazing, shall conform to appropriate code requirements. Interior windows that view hangar floor shall have protective replaceable clear plastic film cover to protect glass from paint overspray.

(i) Signage: Exterior and interior signage shall conform to requirements of Robins AFB Base Facility Standards and Robins AFB Architectural Compatibility Standards. Signage includes all safety signs applicable to the installed systems; e.g. noise, chemical, notice, caution, warning, etc.

4.2.6 Architectural Finishes

(a) Exterior Architectural Finishes: Refer to the Base Architectural Compatibility Standards (Appendix L) for in-depth discussions of architectural districts on base and examples of approved base color schemes, and other pertinent topics. All selections of exterior schemes shall be approved by the Robins AFB Base Architectural Compatibility Officer in 778 CES/CECE.

(b) Interior Architectural Finishes:

- Paints shall be cleanable type and meet or exceed the latest issue of SSPS (Society for Protective Coatings) Paint Systems and Specifications. Paints shall be compatible with use of room if chemicals are stored, issued, or used.

- Acoustical ceilings shall be provided where indicated in the Space Criteria sheets in Appendix C. Units shall be mineral fiber with a minimum NRC rating of 0.55. Ceiling grid shall be intermediate-duty and have baked-on enamel finish.

- Vinyl composition tile (VCT) shall be provided where indicated in the Space Criteria sheets in Appendix C. VCT shall conform to ASTM F 1066, Class 2 (through pattern tile, Composition 1), asbestos-free and shall be nominal 3.2 mm (1/8-inch) thick.

- Resilient base shall be rubber and shall be provided where indicated in the Space Criteria sheets in the Appendix C. Provide straight-style units at carpet and coved units at VCT. Corners shall be premolded.

- Carpet shall be provided where indicated in the Space Criteria sheets in the Appendix C. Carpet shall be level or multilevel loop, solution dyed nylon. Minimum weight shall be 950 grams/square meter (40 oz/yard).

- Chairrail, mildew resistant type II or type III vinyl wall covering and other finish items shall be provided in the conference room.

- Ceramic floor tile, wall tile and base tile shall be provided as indicated in the Space Criteria sheets in Appendix C. Tile shall be installed in accordance with Tile Council of America (TSA) guidelines. Floor tile shall be unglazed and slip resistant. Wall tile shall be glazed. Ceramic tile floors in toilet, shower and locker areas shall slope to drain.

- Hangar floor slabs shall have a pre-mixed, scientifically graded, 98% pure silica aggregate dry-shake hardener incorporated into the concrete floor slab at 5.8 kg/square meter (1.2 lb/sf) coverage such that it forms an integral, monolithically constructed surface to the concrete and achieves a hardness of 7 Mohs and an average rate of absorption of 0.24 gms/min. ACI 302 recommended practices shall be followed for the surface preparation of the concrete slab prior to installation of manufacturer’s recommendations using the two-application process, the first shake distributing approximately two-thirds of the total specified hardener and the second shake distributing the remaining one-third. The concrete slab shall have a moisture content that does not exceed manufacturer’s recommendations. The colorless, penetrating, water-based siliconate solution designed to seal, dust-proof and harden the concrete surface shall be applied at the coverage rate recommended by the manufacturer for the hangar floor surface finish. Four test panels, each 1219 mm by 2438 mm (4’ x 8’) minimum, shall be constructed prior to slab placement. Each test panel shall receive one of the following non-slip finishes: (1) flat steel trowel finish; (2) slight swirl finish; (3) slight textured finish; (4) light broom finish. Surface treatment (final slab finish) will be selected by the Base.

- Toilet and locker room accessories shall be provided in the restroom areas. All accessories shall have a No. 4 brushed stainless steel

finish as minimum. The following toilet accessories shall be provided as a minimum:

- ADAAG compliant grab bars in accessible showers and toilet areas.
- ADAAG-compliant drop down seat in accessible shower.
- Mirrors: One per sink.
- Paper towel dispenser/waste receptacle.
- Surface-Mounted Soap Dispenser: One per sink.
- Shower Curtains and Curtain Rod: One per shower.
- Wall-Mounted Soap Dispenser: One per shower.
- Clothes Hooks: One per shower and one per toilet stall.
- Double-Roll Toilet Tissue Dispenser: One per toilet stall.
- Sanitary Napkin Disposal: One per women's toilet stall.

- Lockers shall be provided as indicated in the Space Criteria sheets in the Appendix C. Lockers shall be metal with baked-enamel finish, integral base, sloping top 300 mm x 457 mm x 1823 mm (12″ x 18″ x 72″) in height. Each locker shall be equipped with shelf, hooks, and latch for padlock. Lockers shall be placed on 100 mm (4″) high concrete housekeeping pad with ceramic tile base. Provide benches as required. There shall be two lockers for each worker, one in the contaminated locker area and one in the clean locker area.

- Fire extinguishers shall be provided as required per NFPA 10 – Portable Fire Extinguishers.

4.2.7 Interior Design Considerations

(a) All interior design proposals shall be IAW the Robins AFB Architectural Compatibility Standards and coordinated and approved by the Robins AFB Base Architectural Compatibility Officer in 778 CES/CECE.

- Color boards and other interior design submittals: All color board and other interior design submittals shall be submitted in accordance with Savannah District Design Manual for Military Construction and Interior Design Presentation Format, see Appendix N.

4.2.8 Handicap Accessibility

All designs shall comply with the Americans with Disabilities Act (ADA) and Uniform Federal Accessibility Standards (UFAS) requirements. In cases of conflict, the more restrictive shall apply. The policy is to use the military exclusion as minimally as possible because of potential changes in facility use and occupancy.

4.2.9 Sustainable Design

The contractor shall develop drawings and specifications with an emphasis on environmentally sensitive materials, recycling, and sustainable design and construction principles. Environmentally responsible design considerations are discussed in the Air Force Environmentally Responsible Facilities Guide. The Contractor shall emphasize, to maximum extent possible and practicable, the design shall incorporate recycled content materials as mandated by EPA's Comprehensive Procurement Guide (CPG) and ETL00-1. Non-availability of materials or technologies, lack of competition, failure to performance standards, and unreasonable price are all valid reasons for exclusion of CPG items. Note that in addition to fulfilling the CPG requirements, contractor should explore other construction alternatives in the Environmentally Responsible Facilities Guide, as well as other aspects of "green" design and construction currently practiced in the industry not mandated by EPA or the

Air Force. The ultimate goal is to increase sustainability in construction while applying common sense to the decision-making process. The U.S. Green Building Council's Leadership in Energy and Environmental Design (LEED) Green Building Rating System Version 2.0 shall be used as an outline of environmental performance targets for this project. Proposer shall submit LEED score for the project and provide details as to how they will achieve that score. It is desired to achieve a score of 18 points or higher.

4.2.10 Landscaping

Landscaping shall be in accordance with the Robins AFB Base Facility Standard, Robins AFB Base Architectural Compatibility Standard, Robins AFB Base Land Management Plan and Unified Facilities Criteria (UFC) DoD Minimum Antiterrorism Standards for Buildings.

The hardwood trees and pines on the site shall be incorporated in the design, retained and protected during construction to the extent possible. The trees within the site for the hangar that must be demolished must be replaced with a similar species of tree having a minimum trunk size of 100 mm (4 inch) caliper diameter. Trees displaced by the parking facility shall be replaced at ratio of one replacement tree for every four displaced trees. All replacement trees shall be IAW base standards. Native planting is strongly encouraged. Avoid using grassed areas as much as possible. Landscaping shall be as low maintenance as possible. If fertilizers or pesticides are used they shall be organic.

5.0 STRUCTURAL DESIGN CRITERIA

5.1 SUMMARY

This section contains the structural design criteria for the Depot Corrosion Control Paint Facility.

5.2 STRUCTURAL SYSTEMS

The structural framing systems to be designed and constructed as part of this project include, but are not limited to the following:

5.2.1 Foundation System

(a) Foundations shall be reinforced concrete spread footings, grade beams, combined footings, or other as recommended by the site-specific geotechnical report prepared by the Contractor's consulting geotechnical engineer . Ground floor slabs shall be slab-on-grade as recommended by geotechnical investigation.

(b) Building foundations shall be coordinated with existing depaint hangar foundations.

5.2.2 Paint Building

(a) The building framework shall be custom designed structural steel. Pre-engineered metal building components such as bar joists may be considered for structural elements. The most economical structural system of steel, concrete and/or load-bearing masonry shall be utilized for building superstructures.

(b) The structure shall be designed to be freestanding, self-supporting and stable after the building is fully completed. It is the designer's responsibility to consider all applied loads and serviceability

requirements throughout the construction procedure and erection sequence, in addition to the service life of the building.

(c) Load-bearing and nonload-bearing walls consisting of steel-reinforced concrete masonry walls and/or cold-formed steel stud walls.

(d) Vertical framing members consisting of structural steel columns, wall girts, and cold-formed wall siding (where applicable).

(e) Horizontal framing members including roof and wall lintel systems. Roof systems may include structural steel beams, open-web steel joists, roof trusses and cold-formed steel roof deck. A structural metal deck may be provided at the roof to distribute lateral loads. Wall lintels shall be constructed of structural steel, reinforced masonry or cast-in-place steel-reinforced concrete.

(f) Mezzanine equipment support levels shall be minimum 100 mm (4-inch) thick normal-weight concrete over form deck over framing steel support members.

(g) Lateral bracing systems including the combination of horizontal and vertical framing systems shall provide structural integrity to transmit all vertical and lateral loading to the foundation in redundant load paths.

(h) Interconnection details including fastening requirements of horizontal and vertical framing systems, providing redundant, integral, structurally sound load paths from each elevated framing system to the foundation. Special consideration shall be used in the design connections of all horizontal and vertical framing members acting as diaphragms and part of the lateral bracing system.

(i) Special conditions such as thermal expansion, lateral drift, machine vibrations, cyclic loading, construction tolerances and control joints are to be considered and accommodated for throughout the design detailing and construction of all framing systems. Each framing system shall be designed and properly coordinated to be integrally compatible with all architectural, mechanical and electrical systems and their corresponding foundations.

(j) Roof: See Architectural Section for standing seam roof and roof slope requirements.

5.3 STRUCTURAL DESIGN REQUIREMENTS

5.3.1 General

The following criteria shall be used for loading, design and installation of all structural systems, including fabrication, erection, supervision, testing and quality assurance. The completed structural design shall include all elements for foundations, walls, roof framing and diaphragms. It shall also include lateral load stability analyses as well as support for architectural features, mechanical and electrical equipment. All calculations shall be performed by a engineer registered in the state of Georgia, checked by an engineer other than the design engineer, and shall be in accordance with the guidance provided in the U.S. Army Corps of Engineers, Savannah District “Design Manual for Military Construction.” The primary code used for structural design shall be the Unified Facilities Criteria UFC 1-200-01 and those codes referenced therein.

5.3.2 Drawings

Design drawings shall have General Structural Notes containing design loading criteria, strengths of engineering materials used, design soil values and any other data that would be pertinent to remodeling and/or future additions since design analyses and specifications often become separated from the contract drawings and lost after a project is completed.

5.4 Design Loads

Structural designs shall be in accordance with IBC 2000 (International Building Code) and the applicable industry codes for the particular material involved.

5.4.1 Wind load shall be in accordance with the IBC 2000.

Wind Velocity:	42.5 m/s (95 mph)
Exposure:	C
Category:	II
Importance Factor:	1.15

5.4.1.1 Hangars shall be designed for hangar doors closed at wind speed of 22 m/s (50 mph). Doors shall be designed to be operable up to 22 m/s (50 mph).

5.4.2 Seismic load shall be in accordance with IBC 2000/TI-809-04 (Dec 98).

Spectral Response:

SS: 0.20
S1: 0.10
Seismic Use Group II
Site Class: D

5.4.3 Snow load shall be in accordance with IBC 2000.

5.4.4 Anti-terrorism/Force Protection: Anti-terrorism/force protection systems must be included for this project and shall conform to the United Facilities Criteria (UFC) “DoD Minimum Antiterrorism Standards for Buildings” UFC 4-010-01, dated 31 July 2002.

Manuals are available from U.S. Army Engineer District, Omaha, ATTN: CENWO-ED-ST, 12565 West Center Road, Omaha, NE 68144-3869.

5.4.5 Special Loads

(a) 6810 kg (7.5 ton) crane with trolley hoist supported from roof structure.
*8
(b) Eight future teleplatforms (fore, aft, and along each wing) with associated runway track, double girder bridges, trolley hoists supported from roof structure. See Section 6.2.2 for future additional teleplatform design loads for additional process equipment support.
*8
(c) 1816 kg (4,000 lb) collateral load for future semi-robotic system. ~~Integrate into teleplatform or support from roof structure adjacent to platform.~~

(d) Safety lanyards (fall arrest system) for crew members working on aircraft supported from roof structure with wing and fuselage coverage. Roof structure supports shall be designed for anchor loads in accordance with ANSI 1014, OSHA Title 29, Chapter XVII, Part 1910 and 1926 and AFOSH Standard 127-100.

(e) Slab-on-grade in hangar shall be designed for wheel loads, associated underwing work stand systems, and floor jack loads for C-5, C-17, 767, KC-135, 707 and KC-130 aircraft.

(f) Slab-on-grade in shops and mechanical rooms shall be designed for actual equipment; 2725 kg (6,000 lb) rated forklift and 12.0 kN/m2 (250 psf) live load.

(g) Piping and fire protection thrust loads.

5.4.6 Walls mostly below grade that are supported laterally by diaphragms at or near the top and bottom, shall be designed using loadings based on at rest soil pressures.

5.4.7 Diaphragms shall have continuous chord members on all edges and shall have a direct positive connection for transferring load to all members of the main lateral force resisting system.

5.4.8 Design Criteria

(a) Design Guidance

- Design Manual for Military Construction, Corps of Engineers, Savannah District.
- Design criteria (except as noted otherwise, the more stringent of the following documents shall govern):
  - Unified Facilities Criteria UFC 1-200-01.
- TI 809-02 Structural Design Criteria for Buildings.
- TI 809-04, Seismic Design Criteria for Buildings (only as referenced by UFC 1-200-1).
- TI 809-07, Design of Load Bearing Cold-Formed Steel Systems.
- TI 809-29 Structural Considerations for Metal Roofing.
- TI 809-30, Metal Building Systems.
- TM 5-809-3, Masonry Structural Design for Buildings.
- TM 5-809-12, Concrete Floor Slabs on Grade Subjected to Heavy Loads.

Also see Appendix A for list of references.

5.5 Serviceability

5.5.1 Vertical deflection ratios of suspended horizontal framing members for dead plus live loads shall not be less than:

(a) L/240 at roofs.

(b) L/600 at masonry lintels.

*8
(c) L/600 at roof for crane and eight future teleplatforms.
*8

5.5.2 Horizontal deflections (drift) caused by seismic or wind loads shall not exceed the limits set forth in the IBC 2000. Building drift must be compatible with diaphragm requirements and walls with brittle finishes, and future teleplatform operations.

5.5.3 Vertical and lateral deflections of hangar door supports shall not exceed operational and serviceability requirements of the hangar doors.

5.6 Foundations

5.6.1 The foundation system shall be designed as recommended by the site-specific geotechnical report prepared by the Contractor's consulting geotechnical engineer .

5.6.2 Footings shall be supported on the natural in-situ soils or on properly compacted backfill. Bottom of foundations shall be located a minimum distance below grade as indicated in these specifications.

5.6.3 The exterior of the building below grade shall have extruded polystyrene perimeter insulation extending down 609.6 mm (24 inch) from the finished exterior grade.

5.7 Concrete Design

5.7.1 Concrete/Reinforcing Material Properties

All concrete work and detailing, fabrication and placing of reinforcing shall be in accordance with the latest editions of ACI 301 Specifications for Structural Concrete for Buildings, and ACI 318 Building Code Requirements for Structural Concrete.

- All concrete unless noted otherwise Fc=21 Mpa (3000 psi) Minimum
- Slab-on-Grade Flexural Strength 4.5 Mpa (650 psi)
- Reinforcing ASTM A615M or ASTM A706M, Grade 400
- Welded Wire Fabric ASTM A185

5.7.2 Concrete Materials

(a) Cement: ASTM C 150, Type I-II Portland cement.

(b) Fly Ash: ASTM C 618, Class "F".

(c) Ground Granulated Blast-Furnace Slag: ASTM C 989, Grade 120.

(d) Fine Aggregate: ASTM C 33.

(e) Coarse Aggregate: ASTM C 33.

(f) Air-Entraining Admixture: ASTM C 260.

(g) Accelerating, retarding and water-reducing admixtures: ASTM C 494.

(h) Flowing Concrete Admixture: ASTM C 1017, Type 1 or 2.

(i) Calcium Chloride shall not be permitted.

5.7.3 Slabs

5.7.3.1 All slab-on-grade floors shall be isolated and free floating.

5.7.3.2 See Section 5.3.5 for slab-on-grade loading.

5.7.3.3 Slabs-on-grade shall be a minimum thickness of 125 mm (5-inch) and reinforced with welded wire fabric or reinforcing steel bars. “Mud slabs” in crawl spaces do not have to be reinforced and shall be 50 mm (2-inch) thick minimum.

5.7.3.4 Slabs shall be placed in lane fashion. Area of sections bounded by crack control joints shall not exceed 55.8 square meters (600 sf), and distance between crack control joints shall not exceed 7.6 m (25 ft). Joints should define a square area as much as practical.

5.7.3.5 Floor slabs shall be detailed in accordance with TM 5-809-12. Construction, contraction, and control joints shall be spaced to control cracking. Slab shall be finished and slab joints sawed before shrinkage cracks can occur. Curing should be started as soon as possible. Joint sealants shall be compatible with building operations. Slab surface treatment shall be demonstrated to be resistant to stripping rinse/wash operations. Structural integrity of the hangar slab-on-grade is critical to facility operations. Particular care should be given to structural detailing and construction procedures. Where concrete does not meet slump, air, or placement requirements, corrective actions will be required by the COTR. Corrective measures may include mix adjustment, equipment changes, procedural changes or slab replacement. For slab surface treatment see Section 4.2.6.

5.7.3.6 Vapor Barrier

Provide vapor barrier under all interior floor slabs. Polyethylene sheet shall not be less than 0.15 mm (6 mils) thick. Provide a capillary water barrier under the vapor barrier.

5.7.3.7 Crack control joints shall be as shown in the Savannah District “Design Manual for Military Construction”, Chapter A-2, Exhibit A-2-15. Reinforcement when required will be interrupted (50 mm (2 inch) clear each side) at sawed or pre-placed crack control joints. Bars shall be mid-depth, and starting 50 mm (2 inches) from edge of slab. The ends of crack control and corners of isolation joints will meet at a common point so far as practical. Floor slab isolation joint shall be 5 mm (0.2 inch) felt. Re-entrant corners shall be reinforced with a minimum of one #13 minimum diagonal bar.

5.7.3.8 Vertical and horizontal runs of conduits and pipes in slabs shall conform to ACI 318. Elevated slabs shall additionally meet the ratings of UL floor assemblies where required. Aluminum conduit and pipes will not be embedded in any concrete.

5.7.3.9 Expansion Joints: Stop reinforcing at joint and provide smooth slip dowels across joint. Provide a bond breaker isolation joint where all concrete slabs abut a vertical surface (foundation walls and columns).

5.7.3.10 Where thickened slabs are employed under column bases or partitions, crack control joints shall be offset from the thickened areas.

5.8 Masonry Design

5.8.1 Concrete Masonry Materials

All design, manufacture and construction of masonry shall be in accordance with the latest edition of TM 5-809-3 Masonry Structural Design for Buildings, and ACI 530 Building Code Requirements for Masonry Structures.

5.8.2 Concrete masonry units shall have a minimum compressive strength of 14 Mpa (2000 psi) on gross area and 7 MPA (1000 psi) on net area at 28 days. Concrete masonry assemblies/prisms shall have a minimum compressive strength of 10.5 Mpa (1500 psi).

(a) Hollow Concrete Masonry Units: ASTM C90, Grade N, Type I or II.

(b) Mortar for Masonry: ASTM C 270, Type S.

(c) Grout for Masonry: ASTM C 476.

(d) Horizontal Joint Reinforcement: 9-gage deformed wire, ladder-type

5.8.3 Provide solid brick where cores in cored brick might be exposed.

5.8.4 Joints shall be 10 mm (3/8-inch), tooled concave.

5.8.7 Masonry walls shall have vertical control joints as follows:

(a) Exterior and interior walls, 7.3 m (24’-0”) maximum

(b) At changes in wall height or thickness

(c) Near wall intersections

(d) At points of stress concentration

(e) At control joints in foundation walls and in floors that support masonry walls

(f) At other locations where cracks are likely to occur

5.9 Structural Steel Design

5.9.1 All design, fabrication and erection of structural steel shall be in accordance with the latest edition of the AISC Manual of Steel Construction.

5.9.2 Steel Material Properties

W Shapes	ASTM A992, Fy=345 MPa (50 ksi)
Shapes and Plates	ASTM A36, Fy=250 MPa (36 ksi)
HSS Shapes	ASTM A500, Grade B, Fy=317 Mpa (46 ksi)
High-Strength Bolts	ASTM A325, ASTM A490
Anchor Bolts	ASTM F1554, ASTM A449
Welding Electrodes	AWS A5.1/5.5 E60XX, E70XX
Paint	Shop primed. Finish coat shall be compatible with facility operations.

5.9.3 Detailing of structural steel framing, including connections, shall be complete. All weld types, bolting layouts, bolt sizes, connection plates, member sizes and locations and stiffener plate sizes and locations shall be shown.

5.9.4 All members, elements and connections that are a part of the main vertical and/or lateral force resisting system must be completely detailed.

5.9.5 All connections other than standard AISC pre-designed shear connections shall be designed by the engineer of record and detailed on the drawings.

5.9.6 If braced frames are used for all or part of the main lateral force resisting system, the stability of structural system shall not depend on any single member or connection. Redundancy shall be provided either by using multiple bays of tension only x-bracing or by using bracing members that are capable of both tension and compression if bracing is placed in a single bay.

5.9.7 All welding shall be done in accordance with latest AWS D1.1 Structural Welding Code.

5.9.8 Provide 12-mm (1/2-inch) diameter minimum weep holes in horizontal member elements to promote moisture drainage.

5.10 Steel Joist Design

Design, manufacture and erection of steel joists and joist girders shall be in accordance with the latest revision of SJI Standard Specifications for Open Web Steel Joists, K-Series, and SJI Recommended Code of Standard of Practice for Steel Joists and Joist Girders.

5.10.1 Joists shall be anchored to steel supports by field welding. Provide erection bolts as recommended by SJI. Provide embedded steel bearing plates in concrete and masonry work. Where top chords are extended provide required section modulus of extensions on the drawings.

5.10.2 Provide special joist seats for sloped roof as required. Modifications or adjustments to joist seats made to accommodate supplier’s fabrication process shall be coordinated with affected trades.

5.10.3 Provide bridging, uplift bridging and cross bridging at bottom chords of joist per SJI recommendations.

5.10.4 Design joists for additional gravity loads and uplift loads as required by analysis.

5.10.5 Provide additional web members at concentrated loads indicated, which do not occur at a panel point. Joists shall support vertical loads of 136 kg on the top or bottom chord between panel points without reinforcing. Do not support loads from bridging.

5.11 Steel Decking Design

Design, manufacture and erection of metal deck shall be in accordance with the latest revisions of SDI Design Manual For Composite Decks, Form Decks and Roof Decks, and SDI Diaphragm Design Manual.

5.11.1 Form deck shall be galvanized. Metal form material shall be minimum 0.38 mm (28 gage).

5.11.2 Steel roof deck material shall be galvanized and be 0.75 mm (22 gage) minimum. A structural steel roof deck shall be provided under all nonstructural metal roofs. If SSMR will be attached directly to steel roof deck, then minimum thickness shall be 1.5 mm (16 gage) (structural SSMR only.)

5.11.3 Galvanized steel roof deck in areas without ceilings which are exposed to view and are scheduled to be finish painted shall be specified to receive a factory primer coat on the underneath side of deck.

5.12 Cold Formed Steel Design

Design, manufacture, fabrication and assembly of cold-formed steel framing shall be in accordance with the latest revision of Design of Cold-formed Load-bearing Steel Systems And Masonry Veneer/Steel Stud Walls, AISI Specification For The Design of Cold-Formed Structural Members, and AWS D1.3 Specification For Welding Sheet Steel in Structures

5.12.1 Cold Formed Steel Materials

(a) Galvanized Structural Framing Members 1.5 mm (16 gage) and heavier: ASTM A 653, Grade D, 345 MPa (50 ksi).

(b) Galvanized Structural Framing Members 1.21 mm (18 gage) and lighter: ASTM A 653, Grade B, 250 MPa (36 ksi).

5.12.2 Trusses fabricated from cold-formed steel members shall be designed and the drawings stamped by a registered engineer in the state of Georgia.

5.12.3 Cold-formed steel members, their components, and connection material shall have G60 galvanized coating.

5.12.4 Top chords of cold-formed roof members shall be 1.5 mm (16 gage), minimum, where standing seam roof clips are connected with screws (structural SSMR only.)

5.13 Wood

5.13.1 Retardant Treatment, when required. Recommendations regarding the use of fire-retardant treatment are provided in USDA Wood Handbook and National Protection Handbook. Pressure impregnation is the preferred treatment method.

5.14 Other Materials

5.14.1 There are no restrictions on proposing other materials to be used in the structural systems of this project if their strengths and durability can be substantiated by ASTM or other approved laboratory tests, and they satisfy the requirements of the design codes and criteria specified in this document.

5.14.2 All design, manufacture, fabrication, and assembly of other construction materials to be used in structural framing systems shall conform to the applicable design standards and meet specific industry.

6.0 MECHANICAL TECHNICAL DESIGN CRITERIA

6.1 PROCESS DESCRIPTION

*8

(a) This project consists of the design and construction of a corrosion control facility for the washing and painting of medium to large aircraft, including the C-5. The hangar shall have 1 bay incorporating the most modern application technologies, including environmental controls, for painting of aircraft. Access to aircraft shall be provided via future suspended work platforms (teleplatforms), tail work stands (only if hangar is configured for tail-in aircraft position) and walk up/drive up access at floor level.

(b) Processes performed in the paint bay shall include: hot detergent wash/rinse, acid etching, alodine chromate conversion coating, primer painting, and topcoat painting. This facility shall support these processes in a safe and efficient manner

(c) The aircraft is brought into the hangar at the end of the depot maintenance cycle. The aircraft is jacked to permit raising of the landing gear and closing of the wheel wells. The exterior surfaces are inspected and damaged fasteners are repaired or replaced as necessary. If already painted, the horizontal stabilizer is masked to protect it from overspray.

(d) The aircraft is then washed or hand cleaned with hot soapy water applied by hoses from the hot water/soap system. The aircraft is rinsed with clean hot water from the hot water system, also applied by hoses. The aircraft sealants are inspected and replaced as necessary.

(e) The aircraft is given an etching with acid applied by hoses from the acid etching system. It is then rinsed, critical areas are masked or plugged, and the plane is scuff sanded. The aircraft sealants are again inspected and replaced as necessary.

(f) The aircraft is given a chromate conversion coating (alodine) applied by hoses from the alodine storage and distribution system, and given a final rinse.

(g) The aircraft is primed with TT-P-2760 Koroflex Primer (specific to the C-5, other aircraft may use other primers).

(h) The aircraft is painted with MIL-C-85285 High Solids Polyurethane, color 36173, or NSN 8010-01-479-0049, color 36173 (specific to the C-5, other aircraft may use other coatings).

(i) The hangar is brought up to temperature for curing.

(j) Stencils are applied. Paint is tested for gloss, adhesion, and thickness. Masking and plugs are removed.

(k) Aircraft is dejacked and removed from the hangar.

6.2 SYSTEMS DESCRIPTION

6.2.1 Paint Bay

(a) The paint bay shall be designed to allow processing of aircraft as large as the C-5, with the required minimum clearance to painting equipment. Refer to the Architectural section for minimum clearances. Aircraft to be painted in the hangar include the C-5, C-17, C130, KC135, 707 and 767. The paint bay area shall be Class I, Division 1, Group D for the entire area. Paint bay shall be conditioned in accordance with applicable codes and regulations and the requirements of these specifications.

(b) Utility services in the paint bay shall include breathing air, compressed air, cold water, acid etching, hot water/soap, hot water rinse, and alodine systems. Utility piping may be routed exposed within the hangar. Preference is to route utility piping concealed within a utility chase or corridor. Provide full access for all concealed piping systems. Access shall be by removable access panels, accessible pipe chases, etc. Preference is to route piping within the hangar in an accessible (walkable) chase (may also be used for wall lighting, if used). Piping

shall be accessible from the ground level. Removal of building liner panel is not considered adequate access.

(c) A minimum of 2 emergency eye wash stations shall be provided along each sidewall of the paint hangar. Contractor shall determine the exact number to meet AFOSH time/distance requirements. Eyewash stations shall be compliant with ANSI Z358.1, Emergency Eyewash and Shower Equipment, and shall be drained to the sanitary system.

(d) Hangar floor drainage: The hangar shall be provided with trench drains located along the door and adjacent to the aircraft parking position. Trench drains shall be located and sized to adequately drain the hangar during normal operation, and to provide drainage for the maximum potential fire water flow from the hangar fire protection system.

6.2.2 Teleplatforms

*8

(a) Deleted~~The paint bay shall be equipped with electrically operated teleplatforms suspended from the ceiling. Teleplatforms shall be in accordance with ANSI B30.11 and ANSI B30.16, and shall be designed to service the C-5 aircraft. If the hangar is configured for a tail-in plane configuration, then 2 teleplatforms are required (one pair aft of the main wing). If the hangar is configured for a nose-in configuration, then 4 teleplatforms are required, with one teleplatform located over each main zone of the aircraft aft of the wing (one pair for area aft of the wing, and one pair for the t-tail area)~~.

*8

(b) Structure shall be provided to allow installation of 2 future teleplatforms, located for coverage forward of the main wing, 2 future teleplatforms aft of the main wing, and 2 future teleplatforms located for coverage over ~~the~~ each wing~~s~~.

*8

(c) Deleted~~The t-tail teleplatforms, crane and fall arrest systems are located in the same area and shall be closely coordinated~~.

*8

(d) ~~The teleplatforms shall be utilized for access to the vertical and upper surfaces of the aircraft during masking, washing, and painting activities.~~ Each future teleplatform shall be capable of travel in any direction, providing complete coverage of the fuselage, to the extent indicated in paragraph (a) above. Each teleplatform shall have the capability of fully rotating 360 degrees in either direction. The vertical work envelope for the teleplatform shall extend from approximately 300 mm (12 in) above the paint bay floor to a height of at least 1.0 m (3’-3”) above the fuselage or tail of the aircraft, as applicable.

*8

(e) Each future teleplatform shall have a work platform with a minimum 1360 kg (3,000 lb) eccentric load limit. The platform shall be large enough to accommodate 3 workers plus equipment and an operator. The mast shall be centrally mounted along one side of the work platform. Each work platform shall be equipped with toe boards, safety rails, emergency egress, breathing air connections, emergency eyewash station, soft rubber proximity detectors, soft rubber safety bumpers and 4 anchors for fall restraint safety lanyards. Preference is to provide DMSS connections and compressed air feeds for non-DMSS equipment directly piped to the teleplatforms~~also include compressed air, cold water connections, acid etch, hot water/soap, hot water rinse, and alodine system connections at the platform to minimize lengths of hoses in the hangar~~.

(f) The contractor shall provide for parked locations for these future teleplatforms that are outside the clearance zones identified in

4.2.2(a).~~Cables and hoses on the teleplatforms shall be attached using snap track cable systems. Festooned cable and hose systems are not acceptable. All utilities for the teleplatforms shall be provided from the ceiling down to the platform.~~

(g) Teleplatforms shall be provided with a positive means to prohibit dust and contaminants from entering the drive system, mast, controls, etc., and shall be suitable for use in the hangar hazardous area.

(h) Controls

(1) Emergency Stop, fixed, wall-mounted

(2) Key operated, wall-mounted control functions:
- Platform – raise, lower
- Rotate clockwise, counter clockwise
- Move left, right
- Move forward, backward

(3) Emergency Stop, fixed platform-mounted

(4) Platform versus Wall control selector switch, fixed mounted on the platform

(5) Portable, platform-mounted functions
- Platform – raise, lower
- Rotate clockwise, counter clockwise
- Move left, right
- Move forward, backward

6.2.3 Tail Work Stands (if Required)

Tail work stands are required if the hangar is configured for a tail-in plane configuration; for nose-in configuration, tail stands are not acceptable unless they can be automatically (i.e. single push button operation) moved to a position to allow towing the aircraft in and out of the hangar. Contractor shall design, manufacture and provide 1 set of tail work stands for the C-5 aircraft. Work stands shall provide complete access to the horizontal stabilizer and empennage of the aircraft. Stands shall be power-operated and move vertically as well as horizontally (may be X-Y or rotational movement) to reach all areas of the empennage and horizontal stabilizer for painting operations. Work stands shall be equipped with permanently mounted lights, compressed air, breathing air, cold water, acid, washdown, hot water and alodine system connections. Work stands shall be equipped with walkways, guard rails and toe boards as required by applicable codes and standards. For tail work stands, clearances to aircraft may be reduced to 1.22 m (4 ft) if four columns are used rather than a cantilevered system. Allow for 3 workers plus operator to work on each side of the aircraft simultaneously. Work platforms shall be capable of moving from the aircraft surfaces to 1.22 m (4 ft) or more away from the aircraft. Structure (columns, primary beams) shall be designed to take an additional vertical load of 3,402 kg (7,500 lb) on each side of the aircraft.

6.2.4 Cranes

(a) The paint bay shall be equipped with a 6810 kg (7.5 ton) crane suspend from the roof structure to service the T-Tail area. Crane and hoist system shall be in accordance with ANSI B30.11, ANSI B30.16, and CMAA No. 70, and shall be suitable for use in the hangar hazardous environment.

The drive system, trolley, and hoist shall be electrically operated. Crane shall provide for the removal and installation of the C-5 horizontal stabilizer.

*8

(b) Controls

(1) Emergency stop, fixed, wall-mounted

(2) Key-operated, wall-mounted control functions

- Bridge – forward, reverse
- Hoist – forward, reverse
- Hoist – raise, lower

~~(3)Controls shall be integrated with teleplatform controls~~

***(6)**

(c) Intent is to remove the horizontal stabilizer, rotate it 90 degrees (in the tail pocket, if tail-in), lower it to a dolly (stabilizer is placed on dolly flat) and pull the dolly out of the hangar doors. Stabilizer is removed in a single assembly. Ensure space exists at pinch points to accomplish this. The path of the dolly travel can be below the aircraft wings however, provide 3.05 meters (10 feet) clearance to aircraft engines. The stabilizer is 7.93 meters (26 feet) by 31.04 meters (69 feet). The dolly horizontal plan dimensions are .61 meters (2 feet) larger than the stabilizer in each horizontal direction.

6.2.5 Scissor Lifts (GFGI)

Scissor lifts are Government Furnished, Government Installed (GFGI) equipment. This contract shall provide all support utilities for GFGI equipment, including a battery charging area for the scissor lifts. Six 9 m (30 ft) scissor lifts will be provided, ANSI A92.6 compliant. Lifts will be approved for use in the hangar hazardous area. Lifts will have a minimum lift capacity for 4 workers plus equipment, manual lowering valve, proportional controls for lift and drive functions, emergency stop switches at platform and ground level, non-marking tires, and automatic battery charger with maintenance free batteries, and task lighting. Contractor shall allocate and mark the parking location on the floor. Park/recharge areas shall be outside the clearance zones of the aircraft.

6.2.6 Forklifts

Provide one forklift, including fueling/recharging/parking station, rated for 2721 kg (6,000 lb), for the paint facility. Forklift shall have solid pneumatic tires, be propane or battery powered, and shall contain all the features and components necessary to work functionally and efficiently in the paint facility.

6.2.7 Fall Arrest System

Nineteen fall arrest systems shall be provided in the paint bay, 6 over the aircraft fuselage, 6 over each wing, and 1 over the t-tail area. Systems shall be spaced evenly across each wing or fuselage to maximize coverage. Each system shall support two workers. Fall arrest systems shall be in accordance with ANSI A10.14 and OSHA Title 29, Chapter XVII, Part 1910 and 1926.

6.2.8 Breathing Air System

*8

(a) The paint bay shall be equipped with a Class D breathing air system. The system shall be sized to serve a minimum of 40 personnel simultaneously. The system shall supply and sustain a minimum of 550 kPa (80 psig) at all breathing air drop locations, based on 40 personnel simultaneously utilizing breathing air at those breathing air connections located

furthest from the mechanical room. For design purposes, assume a minimum consumption of 560 L/m (20 cfm), per person. Each connection shall include a pressure gauge and adjusting valve. If the system pressure exceeds 860 kPa (125 psig), then pressure reducing valves shall be provided at each connection. The contractor shall provide breathing airdrops along each sidewall of the hangar, above each wing of the C-5 aircraft, above the aircraft fuselage, ~~on each teleplatform,~~ and on the tail work stands (if provided). Provide hose reels at each breathing air drop. Breathing air drops shall be located so workers are dragging no more than 50 m (165 ft) of air hose for any of the following (maximum length of hose shall be 91 m (300 ft) from point of attachment to the respirator facepiece):

*8

- 12 workers on each wing
- ~~4 workers on each of the teleplatforms simultaneously~~
- 12 workers on the fuselage
- 12 workers on the fuselage
- 12 workers on the underside of the fuselage
- 8 workers on tail/empennage

(b) Piping for breathing air systems shall be stainless steel. Breathing air quick disconnects (QD's) shall be industrial interchange 10 mm (3/8 inch), properly labeled, and shall coordinate with Robins AFB standards. QD's shall be not be compatible with any other gas systems in the facility in accordance with 29CFR 1910.134h(4)(i)(8). Visible and audible alarms of breathing air shall be provided in the paint bay, in or near the Supervisor's office, and anywhere else breathing air drops are installed. Alarms shall be visible to the respirator users. Provide multiple annunciation devices in the hangar such that users at any point within the hangar can see the alarm with an aircraft in the space. Alarm panel shall be approved by Robins AFB and shall monitor O2 and CO gases, and low air pressure (RAFB standard alarm panel is DYNAMATION ABL 4021-1). A complete Class D Breathing Air system shall be provided.

(c) Provide a minimum of two breathing air compressors (each 60% capacity). Compressors shall be compatible with COMPAIR specified lubricants. Provide a system connection for utilizing a portable air breathing air compressor. Connection shall tie into breathing system upstream of the BA system monitors, shall be accessible to the outside and clearly labeled.

6.2.9 Compressed Air System

*8

(a) The paint bay shall be equipped with an instrument quality compressed air system to provide air for paint guns, pneumatic pumps, and general use. Connections or drops for paint guns shall be provided with a motorized valve to prevent painting operations when the exhaust system is not operating. Paint bay compressed air outlets shall be located along each sidewall of the paint bay, above each wing of the C-5 aircraft, and above the fuselage. Compressed air shall also be plumbed to hose reels ~~for the overhead teleplatforms (if not piped directly to the platforms)~~ and to the tail work stands (if provided) in the paint bay, and to mechanical/equipment rooms as indicated in Appendix C – Functional Room Requirements. Provide hose reels at each compressed air drop. Compressed air drops shall be located so workers are dragging no more than 60 m (200 ft) of air hose for any of the following:

*8

- 20 workers on one wing
- ~~4 workers on each of the telescoping manlifts simultaneously~~

- 12 workers on the underside of the fuselage
- 8 workers on tail/empennage

Air outlet spacing and hose length shall allow CA to reach all points on the C-5 aircraft. Hose reels shall be auto reeling, wall-mounted, completely off the floor. Compressed air shall be supplied at a minimum of 620 kPa (90 psig) at the connections.

*(6)
(b) Compressed air is available from the Robins AFB central compressed air system. Compressed air piping is 255 mm (10 in) PE 3408, SDR 7.3 located in a utility corridor off the edge of the flightline. Plant has 943.8 L/s (2,000 scfm) excess capacity available at 725 kPa (105 psig) flowing pressure, 860 kPa (125 psig) pressure rating. At the Contractor's option, this compressed air can be used to supplement the needs for this hangar or the depaint hangar. If used, air shall be filtered for oil, water and particulate before being connected with the building compressed air system. Provisions shall be made for system isolation and to ensure building compressed air system will not backfeed the base distribution system.

(c) In addition to using the excess compressed air capacity from the central compressed air plant, as an alternate to providing air compressor capacity in the Paint Hangar, contractor may install an additional air compressor in Bldg 83 Central Compressor Plant. The plant has sufficient space and power for one additional 335 kW (450 hp) air compressor. The plant also has spare filter/dryer capacity and has space and power in the existing MCC for an additional motor starter. Refer to Appendix S – Existing Compressed Air Plant Information for additional information.

(d) The Contractor shall provide all compressed air equipment, distribution piping, drops and connections for a complete and operating compressed air system. A minimum of two 50% capacity air compressors and two 50% capacity air dryers shall be provided. Air compressors shall be compatible with COMPAIR specified lubricants. Air receivers shall be painted carbon steel, ASME pressure vessels, rated for the maximum pressure encountered. Compressed air QD's shall be 8 mm (1/4 inch) and shall be coordinated with Robins AFB standards. Confer with the Contracting Officer for Robins AFB standard size/part number for compressed air QD's.

6.2.10 Rinse Distribution System

*8
(a) The paint bay shall be equipped with a cold, process water rinse distribution system. The cold water system shall provide a minimum of 12.9 L/m (3.4 gpm), 1380 kPa (200 psig), water to each of 14 hose reels, 7 along each side wall of the hangar, plus to hose reels for the future overhead teleplatforms ~~(if not piped directly to the platforms)~~, and to additional hose reel locations optimized for the C-5 aircraft. Consider maximum number of workers, hose lengths, and number of hoses required at: top of wing, top of tail, beneath wing, and beneath fuselage. A superior system will allow the specified number of workers to the most areas with the least number of hoses. Each hose reel shall be auto reeling with a side-mounted manual retraction mechanism and shall contain a minimum of 60 m (200 ft) of 20 mm (3/4 inch) hose with adjustable nozzle. Location of the hose reels and lengths of hose shall allow operators to reach all portions of the aircraft with a maximum hose length of 50 m (165 ft). Hose reels shall be wall-mounted completely off of the floor. A bracket for holding the hose end shall be provided at each hose reel location. Cold water system shall be designed with the capability of providing, at

a minimum, the specified pressure and flow rate to each position when any 20 positions are operating simultaneously. Cold process water shall be pretreated utilizing a water softener and shall be provided with switchable (duplex or equivalent) polishing filters to finish-filter the water discharge to 25 microns. The cold, process, water system shall include the following equipment, as a minimum:

*8

2 Each, Pumps in Parallel (1 Backup)
1,380 kPa (200 psig) Min Pressure @ Hose Reel Stations
12.9 L/m (3.4 gpm) Minimum @ each Hose Reel Station (simultaneously)
7 Hose Reel Stations along each sidewall of hangar (14 total)
Hose reels for teleplatforms (number as required~~), or hose connections on each teleplatform (preferred)~~

Reduced Pressure Backflow Preventer
Isolation Valve(s)at each position

(b) Piping and insulation materials shall be as specified in paragraph 6.5.20 Process Piping.

6.2.11 Medium Pressure Hot Water Distribution System

*8

(a) The paint bay shall be equipped with a medium pressure hot water system to provide a minimum of 37.9 L/m (10 gpm), 1,030 kPa (150 psig), 60 deg C (140 deg F) wash water to each of 14 hose reels, 7 along each side wall of the hangar, plus to hose reels for the future overhead teleplatforms ~~(if not piped directly to the platforms)~~, and to additional hose reels optimized for the C-5 aircraft. Consider maximum number of workers, hose lengths, and number of hoses required at: top of wing, top of tail, beneath wing, and beneath fuselage. A superior system will allow the specified number of workers to the most areas with the least number of hoses. Each hose reel shall be auto reeling with a side-mounted manual retraction mechanism and shall contain a minimum of 60 meters (200 ft) of 20 mm (3/4 inch) hose with adjustable nozzle. Location of the hose reels and lengths of hose shall allow operators to reach all portions of the aircraft. A bracket for holding the hose end shall be provided at each hose reel location. Each hose reel shall be wall-mounted completely clear of the floor. The hot water system shall be equipped with an independent recirculation system to maintain water temperature within the distribution piping during periods of inactivity. System shall be designed with the capability of providing, at a minimum, the specified temperature, pressure and flow rate to each position when any 8 positions are operating simultaneously. Hot water heating, storage and pumping equipment shall be located in a common equipment room. Hot water shall be pretreated utilizing a water softener and shall be provided with switchable (duplex or equivalent) polishing filters to finish-filter the water discharge to 25 microns. Hot water systems shall include the following equipment and all necessary ancillary equipment and materials to provide a complete and functioning system:

*8

Medium Pressure Hot Water (Working Temperature - 60 deg C (140 deg F))
18,900 liter (5,000 gal) Storage Capacity
Heating Capacity to maintain water temperature at peak demand
2 Each, Pumps in Parallel (1 Backup)
1,035 kPa (150 psig) Min Pressure @ Hose Reel Stations
37.9 L/m (10 gpm) Minimum @ each Hose Reel Stations
Supply from Shop Compressed Air System
7 Hose Reel Stations along each sidewall of hangar (14 total)
Hose reels for teleplatforms (number as required~~), or hose connections on each teleplatform (preferred)~~
Recirculation System to Hose Reels

Reduced Pressure Backfill Preventer
Isolation Valve(s)at each position

(b) Piping and insulation materials shall be as specified in paragraph 6.5.20 Process Piping.

6.2.12 Hot Water/Soap Washdown Distribution System
*8

(a) The paint bay shall be equipped with a hot water/soap mixing, heating and distribution system. This system shall simultaneously provide a minimum of 12.9 L/m (3.4 gpm), 1380 kPa (200 psig), 54 deg C (130 deg F), hot alkaline soap solution (non-emulsifying, MIL-PKF-87937, Type 3) to each of 14 hose reels, 7 along each side wall of the hangar, plus to hose reels for the future overhead teleplatforms ~~(if not piped directly to the platforms)~~, and to additional hose reels optimized for the C-5 aircraft. Consider maximum number of workers, hose lengths, and number of hoses required at: top of wing, top of tail, beneath wing, and beneath fuselage. A superior system will allow the specified number of workers to the most areas with the least number of hoses. Each hose reel shall be auto reeling with a side-mounted manual retraction mechanism and shall contain a minimum of 60 meters (200 ft) of 20 mm (3/4 inch) hose with adjustable nozzle. Location of the hose reels and lengths of hose shall allow operators to reach all portions of the aircraft. A bracket for holding the hose end shall be provided at each hose reel location. Each hose reel shall be wall-mounted completely clear of the floor. The hot water/soap system shall be equipped with a recirculation system to maintain in-pipe solution temperature during periods of inactivity. Soap solution mixing, heating, storage (both concentrated and dilute solutions) and pumping equipment shall be located in a common equipment room. Soap concentrate shall be filled from 208-liter (55-gal) drums. In addition, a use preference is to have a truck delivery connection and transfer piping from the exterior of the building to the concentrated soap storage tank. All piping utilized for concentrated soap solution shall be 304 stainless steel. Hot water shall be pretreated utilizing a water softener provided as part of this project. Equipment provided for the hot water/soap system shall include, but is not limited to, the following:

Concentrated Alkaline Soap (MIL-PKF-87937, Type 3)
- 3,800 Liter (1000 gal) Storage Tank
  - Concentrated Soap Solution (ambient temperature)
  - External Truck Hookup Fill System (preference)
  - Transfer Pump to Hot Alkaline Soap Solution Tank
  - Site Glass Volume Gauge

*8

Hot Alkaline Soap Solution (MIL-PKF-87937, Type 3) (Working Temperature – 54 deg C (130 deg F))
- 18,900 Liter (5,000 gal) Hot Storage Capacity (Hot Mixed Solution)
  - Paddle Agitator
  - Heating System to maintain system temperature
  - Sight Glass Volume Gauge
- 2 Each, Pumps in Parallel (1 Backup)
  - 1380 kPa (200 psig) Min Pressure @ Hose Reel Stations
  - 12.9 L/m (3.4 gpm) Minimum @ each Hose Reel Stations
- 7 Hose Reel Stations along each sidewall of hangar (14 total)
- Hose reels for future teleplatforms ~~(number as required), or hose connections on each teleplatform (preferred)~~
- Recirculation System

Contractor shall provide a full tank of Concentrated Alkaline Soap upon successful completion of hangar start-up.

(b) Piping and insulation materials shall be as specified in paragraph 6.5.20 Process Piping.

*8

6.2.13 Acid Storage and Distribution System

The paint bay shall be equipped with an acid etching storage and distribution system (MIL-C-38334, Phosphoric Acid, 4% concentration). This system shall simultaneously provide a minimum of 12.9 L/m (3.4 gpm), 1380 kPa (200 psig), acid etching to each of 14 hose reels, 7 along each side wall of the hangar, plus to hose reels for the future overhead teleplatforms (if not piped directly to the platforms), and to additional hose reels optimized for the C-5 aircraft. Consider maximum number of workers, hose lengths, and number of hoses required at: top of wing, top of tail, beneath wing, and beneath fuselage. A superior system will allow the specified number of workers to the most areas with the least number of hoses. Each hose reel shall be auto reeling with a side-mounted manual retraction mechanism and shall contain a minimum of 60 meters (200 ft) of 20 mm (3/4 inch) hose with adjustable nozzle. Location of the hose reels and lengths of hose shall allow operators to reach all portions of the aircraft. A bracket for holding the hose end shall be provided at each hose reel location. Each hose reel shall be wall-mounted completely clear of the floor. Acid shall be filled from 208-liter (55-gal) drums. All piping and components utilized for acid etching shall be stainless steel with Teflon coated wetted parts; system components shall be fully compatible with the acid etching fluid. Equipment provided for the acid etching system shall include, but is not limited to, the following:

*8

Acid Etching System
- 18,900 Liter (5,000 gal) Storage Capacity
  - Sight Glass Volume Gauge
- 1 Each, Pump
  - 1380 kPa (200 psig) Min Pressure @ Hose Reel Stations
  - 12.9 L/m (3.4 gpm) Minimum @ each Hose Reel Stations
- 7 Hose Reel Stations along each sidewall of hangar (14 total)
- Hose reels for future teleplatforms ~~(number as required), or hose connections on each teleplatform (preferred)~~

Contractor shall provide a full tank of Acid Etching Solution upon successful completion of hangar start-up.

6.2.14 Alodine Storage and Distribution System

*8

The paint bay shall be equipped with an chromate conversion coating (alodine) storage and distribution system. This system shall simultaneously provide a minimum of 12.9 L/m (3.4 gpm), 1380 kPa (200 psig), alodine solution to each of 14 hose reels, 7 along each side wall of the hangar, plus to hose reels for the future overhead teleplatforms (if not piped directly to the platforms), and to additional hose reels optimized for the C-5 aircraft. Consider maximum number of workers, hose lengths, and number of hoses required at: top of wing, top of tail, beneath wing, and beneath fuselage. A superior system will allow the specified number of workers to the most areas with the least number of hoses. Each hose reel shall be auto reeling with a side-mounted manual retraction mechanism and shall contain a minimum of 60 meters (200 ft) of 20 mm (3/4 inch) hose with adjustable nozzle. Location of the hose reels and lengths of hose shall allow operators to reach all portions of the aircraft. A bracket for holding the hose end shall be provided at each hose reel location. Each hose reel shall be wall-mounted completely clear of the floor. All piping and components utilized for alodine system shall be stainless steel with Teflon coated wetted parts; system components shall be fully compatible

with the alodine coating conversion fluid. The alodine system will be filled from liquid or powder concentrate. Equipment provided for the alodine system shall include, but is not limited to, the following:
*8

Alodine Storage and Distribution System
- 3,800 Liter (1,000 gal) Alodine Solution Tank
  - Sight Glass Volume Gauge
- 1,500 Liter (400 gal) Mix Tank
  - Concentrated Solution
  - Transfer Pump to Alodine Solution Tank
  - Site Glass Volume Gauge
- 1 Each, Pump
  - 1380 kPa (200 psig) Min Pressure @ Hose Reel Stations
  - 12.9 L/m (3.4 gpm) Minimum @ each Hose Reel Stations
- 7 Hose Reel Stations along each sidewall of hangar (14 total)
- Hose reels for future teleplatforms ~~(number as required), or hose connections on each teleplatform (preferred)~~

Contractor shall provide a full tank of Alodine concentrated solution upon successful completion of hangar start-up.

6.2.15 Steam Cleaning System

The Steam Cleaning System shall be an all-electric combination steam cleaner/pressure washer. Steam cleaner shall be portable and storage space shall be provided for these in the equipment room. System shall be capable of cold or hot pressure washing and steam cleaning. Voltage shall be 460 volt, 3 phase, 60 hertz. Pressure washer shall deliver a minimum of 0.10 L/s (0.3 gpm) at 4135 kPa (600 psig), and temperatures up to 71 deg C (160 deg F). Steam Cleaner shall deliver a minimum volume of 132 L/hr (34 gph) at up to 1380 kPa (200 psig), 162 deg C (325 deg F). System controls shall consist of nozzle control, adjustable thermal control, low water cut-off, and high temperature limit protection. System shall have the ability to be “lock out/tag out” during hangar painting operations. System shall have high pressure relief valve and pulse dampening accumulator. Float tank shall be stainless steel with minimum 18.9 L (5 gal) capacity. Pressure vessels and piping shall meet ASME code. Minimum of 45 m (150 ft) of hose shall be provided, length as required to reach all portions of the aircraft landing gear. Total quantity of Steam Cleaning Systems shall be two (2).

6.2.16 Freezer

Provide one vertical or chest type industrial freezer to store a minimum of 600 sealant tubes, 0.5 L (1 Pint) in size (caulk tube size). Freezer shall be suitable to store materials at –40 deg C (-40 deg F), have adjustable temperature setting, and utilize CFC free refrigerant.

6.2.17 Pneumatic Sanders (GFGI)

Pneumatic sanders are Government Furnished, Government Installed (GFGI) equipment. This project shall provide all support utilities and storage shelves for the GFGI equipment. The pneumatic sanders will be compressed air driven random orbital sanders with 150 mm (6 inch) diameter premium medium density sanding pad capable of using vinyl-faced and hook-face sanding pads. Sander will have a handle grip with the ability to connect to the HEPA vacuum units. Operating air flow rate will be 1.9 L/s (4 cfm) at 620 kPa (90 psig) maximum inlet pressure. Sander housing will be constructed of lightweight composites to reduce weight and operator fatigue, ergonomically designed for maximum comfort and shall have built-in balance to minimize vibration. Hand grip will be sufficiently padded (rubber molds and padding) to absorb vibration. Handle angle will be designed to reduce inappropriate hand angle

(wrist stress). Maximum operating sound level shall be 84 dBA. Total quantity of fifty (51) sanders will be provided. Compressed air system shall be capable of operating 25 sanders simultaneously.

6.2.18 HEPA Vacuum Units (GFGI)

HEPA Vacuum Units are Government Furnished, Government Installed (GFGI) equipment. This project shall provide all support utilities for the GFGI equipment. The electric HEPA Vacuum System will be a self-contained mobile unit, suitable for operation in the paint hangar environment. System motor shall be equipped with thermal protection device to prevent overheating and burnout. Airflow capacity will be a minimum of 94 L/s (200 cfm). Noise level shall not exceed 83 dBA. Filters will have microfilters and HEPA exhaust filters 99.97% efficient for containment of dust particles. Each HEPA filter will be individually DOP tested and certified and have a normal shelf life of not less than 1 year. A meter will be incorporated that will alert the operator to change the main filter. Container capacity will be a minimum 68 L (18 gal) dry bulk and have disposable polyliner system. System must have capabilities to roll around in work area. Hose connecting to pneumatic sanders will be at least 3 meters (10 ft) in length (length shall reach any point on top of the aircraft from the floor level) and have ball joint connections at both ends to eliminate stress and prevent cracking. Hose should be made of smooth lined, steel reinforced neoprene to reduce possibility of blockage. HEPA Vacuum System will serve two sanders simultaneously. Total quantity of HEPA Vacuum Systems will be twenty five (25).

6.2.19 Paint Shakers

Industrial heavy-duty high-speed paint shaker shall have capacity to mix up to 50 kg (110 lb); 18.9 L (5 gal) pails, 3.8 L (1 gal) cases or up to seven 1 L (1 quart) containers of paint at a time. Paint shaker shall incorporate an emergency stop button which cuts power to the machine immediately. Door sensor shall prevent the mixer from operating unless door is fully closed. Automatic operation; mixer shall clamp, run, release, reset and open the door. Paint shaker shall be equipped with side shelf for easy loading. Paint shaker shall be equipped with wheels to allow for mobility during installation and access. Motor shall be a 110 volt, heavy-duty totally enclosed, fan cooled (TEFC). Shaker shall be equipped with sound absorbing panels openable/removable for periodic maintenance access and ease of clamping mechanism change-out. Building ventilation system shall be arranged to pull air away from operator in the event of a spill. Total quantity of Pain Shakers shall be six (6).

6.2.20 Paint Gun Cleaning System

The Paint Gun Cleaning System shall be an automated, environmentally friendly system with built in distillation unit capable of recycling up to 90% of the contaminated solvent. The system shall be NESHAP compliant and shall have cleaning capacity of 6 spray guns at one time (interior and exterior of paint guns). Basin/grilled working surfaces shall be stainless steel. System shall be explosion-proof certified, Class 1, Division 1, Group D. Provide a means for “lock out/tag out” of paint gun cleaning system during hangar painting operation. Total quantity of Paint Gun Cleaning Systems shall be four.

6.2.21 Paint Carts

Paint Carts are part of this contract; paint guns are Government Furnished, Government Installed (GFGI) equipment. The Paint Cart shall be a packaged unit sprayer capable of spraying light to medium-heavy materials. Package shall include 4-wheel cart, pump, hoses, and air regulator. Pump shall be sized for the application with severe-duty wear parts for excellent abrasion

and corrosion resistance. Wetted parts shall be stainless steel. Spray guns (GFGI) will be air spray electrostatic guns, 85 kV, with “snap back” electrode with a completely self-contained power source to generate the electrostatic charge. Electrostatic potential will be generated as a low voltage in the gun and multiplied within the gun, not transmitted from an external source. Total quantity of Paint Carts shall be twenty five (25).

***(6)6.2.22 Paint Booth**

(a) The exterior paint booth shall be a pre-engineered system and shall have clear dimensions of 18 m (60 ft) x 27 m (90 ft) x 7 m (23 ft) tall, as required to paint a C-5 horizontal stabilizer. Access door shall be large enough to accommodate a C-5 horizontal stabilizer, and personnel doors shall be provided for routine and emergency egress. System shall meet OSHA and NFPA regulations, shall comply with NESHAP, and shall meet all federal, state and local regulatory requirements. Provide with air handling system to provide uniform air distribution along the length of the paint booth. Air velocities shall be as indicated in Table 1.

(b) Paint booth air handling system shall be capable of providing heating and cooling temperature control to meet design criteria indicated in Table 1. Air handling design shall be energy efficient, provide uniform distributed air intake and exhaust and maintain slight negative pressurization to eliminate contaminant escape from the paint booth.

(c) Filtration system shall have a three stage filtration system to comply with NESHAP requirements of 95% removal of particulates over 5 micron size.

(d) Paint booth shall be provided with wet pipe sprinkler system connected to building system.

(e) Provide clear plastic tear-off strips on the lenses of the paint booth lights to facilitate cleaning paint from lenses.

(f) Paint booth shall be equipped with utilities for two workers plus one observer in the booth. Utilities shall be the same as in the paint hangar for the wash, etch, alodine and paint process, including chemical feeds, breathing air, compressed air, etc. Paint bay shall also include industrial waste trench drains.

(g) Total quantity of one (1) paint booth to be provided.

6.2.23 Process Heating, Ventilating, Cooling, and Exhaust (PHVCE) System

(a) The paint bay shall be equipped with a variable airflow process heating, ventilating, and exhaust system for the removal of VOC’s generated by the aircraft painting operations. As an option, process cooling shall be provided as described herein.

(b) The exhaust system shall include particulate filtration in compliance with 40 CFR, Part 63.745(g). Filtration shall be a 3-stage, Aerospace NESHAP’s compliant, dry media filtration system. System shall be certified by the manufacturer to meet or exceed the source filtration efficiencies required in 40 CFR, Part 63.745, based on EPA Test Method 319. The maximum clean pressure loss for the entire three stage system shall not exceed 248 Pa (1 in w.c.), and the entire 3 stage system shall be capable of sustained operation at a differential pressure of 746 Pa (3 in w.c.) without damage.

1. Each exhaust air filter wall shall be provided with a differential pressure gauge to indicate the pressure drop across the filters.

2. All filter elements shall be accessible from fixed work platforms/catwalks located to provide full access to the filter elements. Include hoists with the catwalk system to allow raising and lowering the filters to each level.

(c) Exhaust air shall be ducted to exhaust stack(s), sized to discharge exhaust up and away from the building. Exhaust fans shall be sized to allow an additional 25 mm (1 in w.c.) static pressure in the exhaust duct for future air pollution control (APC) equipment. Fan motor and electrical service shall not be sized for increased power required by the future APC equipment.

(d) Air Recirculation

1. The PHVCE system may include air recirculation, following particulate filtration. Air recirculation system shall be in compliance with 29 CFR 1910.107(d)(9) and OSHA Formal Interpretation Letter, dated 6/24/2002, entitled “Hierarchy of controls for exposure to air contaminants”; and with engineering controls to comply with 29 CFR 1910.1000. Engineering controls include all areas such as the filter wall, uniform airflow, air monitoring, and access to aircraft surfaces.

2. The system shall meet the requirements of NFPA 33 for recirculation of air.

3. High efficient air filters shall be provided in the recirculated airstream. Filters shall be a minimum of 99.97% efficient at 0.3 micron particle size, for all contaminants in the airstream.

4. Proposers shall calculate the chemical concentration levels in the hangar during routine painting of an aircraft based on information provided in Appendix H – Process Material Safety and Data Information. This appendix provides MSDS information for the products used in the hangar, as well as process flow rates. Acceptance criteria for chemicals of concern as measured at the painters’ breathing air zones during routine painting of an aircraft are: equal or less than the current concentrations of 600x PEL for strontium chromate, and less than the PEL for isocyanates and any hazardous VOCs. This is regardless of use of PPE.

5. Recirculated air shall be mixed with tempered air from the outside air units to provide supply air to the hangar of adequate temperature and humidity. System shall be provided to allow the amount of recirculated air to be increased from the design value up to 80% recirculated air. This adjustment would be done only once after the initial bio-environmental test, and after that only if there were a significant change in work practices.

6. Provide access points to permit periodic inspection and cleaning of the entire recirculation air duct. Access points shall be every change in direction and every 15.3 m (50 ft) of straight duct run. Recirculation system shall ensure adequate mixing of outside air and recirculated air before entering the supply air plenum.

7. Provide continuous VOC monitors in recirculated air duct to allow for sensing concentration levels and lower flammability levels (LFL) in the recirculated air. Continuous monitoring is defined as 1 sample

collected per minute and lag time between sample collection and analysis will be 5 minutes. Monitors shall be interlocked with the painting process to automatically shut down the paint process if the VOC limits, which are a surrogate measure for isocyanate and strontium chromates levels, are exceeded or if the VOC sensors are not operational. The VOC levels at which alarms are triggered will be tied to the levels of isocyanates and strontium chromate in the air stream and will be to provide safety to the workers.

(e) The PHVCE system shall be designed and controlled to maintain –10 Pa (-.04 in w.c.) pressure in the hangar at all times with respect to outdoors and adjacent areas. System shall provide a uniform airflow, parallel to the aircraft axis of flight, across the cross-section of the aircraft plus 3 meters ("aircraft zone"), including beneath the fuselage. Supply system shall incorporate means to adequately balance the flow and direction of air.

(f) During Paint Mode the minimum average air velocity shall be a 18.3 m/min (60 fpm) in the aircraft zone (22.8 m/min (75 fpm) maximum, 15.3 m/min (50 fpm) minimum at any point within the zone), with a minimum of 15.3 m/min (50 fpm) at any point outside the aircraft zone. Actual required airflow shall be calculated by the proposers based on application rate and acceptable personnel exposure limits in the hangar. Refer to Appendix H – Process Material Safety and Data Information for additional information on the painting process and paints used. Provide equipment and means to allow the airflow in the aircraft zone to be set at 12.2 m/min (40 fpm), 15.2 m/min (50 fpm), or 18.3 m/min (60 fpm) average velocities. These airflows are not control points, but the systems shall be arranged to allow the base to manually rebalance airflow to these points if they desire to run tests at lower velocities in the future. Painting operation shall be locked out if the PHVCE system is not operating, or operating at partial airflow.

(g) One spare supply and exhaust air handling unit or fan shall be provided to allow full system operation when any one fan is down for maintenance. For variable flow systems, provide variable frequency drives (VFD's) on each fan in the system. Provide sequential control of the PHVCE system to limit electric demand. Pair exhaust and return fans with air handling units to start simultaneously, with each EF/RA/AHU set sequenced for staggered starts.

(h) The PHVCF systems shall be designed in compliance with all applicable codes and guidelines, specifically Aerospace NESHAP's and OSHA. Systems shall be interlocked with the fire alarm system panel, with an alarm free condition as a prerequisite for fan operation. All fans (supply, return, and exhaust) within a fire protection zone shall be de-energized upon receipt of an alarm signal from the fire alarm panel that an alarm condition exists in that zone. Smoke detectors shall be provided in all air handling units that deliver airflow of 944 L/s (2,000 cfm) or greater. Provide an audible and visual alarm in the hangar to indicate inadequate airflow in the PHVCE system.

(i) Heating systems shall be designed to maintain the minimum heating and humidification setpoints and airflow rates as indicated in Table 1 – Paint Bay Heating and Ventilating Requirements with the hangar doors closed. The paint bay heating systems shall shut down when the main hangar doors are opened. A minimum thermostat setting of 5 deg C (41 deg F) with an adjustable setpoint shall be included in the design to protect piping from freezing when doors are open during subfreezing temperatures. The heating system design shall include the capability to restore the

paint bay temperature and humidity to the heating setpoint within 4 hours after bringing in a C-5 aircraft on the coldest design day.

(j) Process Cooling (PC):

(1) As an option, Contractor shall provide process cooling for the paint bay hangar. PC design shall be capable of maintaining the indicated hangar temperature while supplying 30% OA flow on the summer design day (worst case of DB/MCWB or WB/MCDB). Cooling plant shall be sized based on the 2% Occurrence summer design outside air temperatures; air handling unit coils and branch piping shall be sized based on the 1% Occurrence summer design outside air temperatures. System shall be capable of restoring the paint bay temperature to the cooling setpoint within 4 hours after bringing in a C-5 aircraft on the summer design day.

(2) Conditioned air from the OA units shall be mixed with RA from the hangar to provide SA of the appropriate temperature and humidity to condition the hangar. System shall provide 30% conditioned outside air, 70% return air. In addition to providing units to supply 30% of conditioned outside air, unit(s) shall be provided to allow an additional 10% of filtered outside air (no heating or cooling required) as a back-up to the OA units. Back-up units shall be located to ensure outside air remains evenly mixed with recirculated air. For example, if air handling units are placed on both sides of the hangar, then each side shall have a back-up (filtered outside air) unit.

(3) Process cooling system shall be designed to provide adequate cooling with the hangar operating at 30% OA; however, initial operating condition of the hangar will to be at 20% OA. Cooling coils may be located in portions of the return air stream if desired to provide adequate hangar cooling at the 20% OA condition. These cooling coils are subject to all accessibility and maintainability requirements described in this document.

(4) Provide a minimum of three equally sized chillers to satisfy the peak load. Cooling system shall provided adequate cooling on a design day with the hangar operating at 20% OA condition with the largest chiller out of service. The cooling plant shall be provided (by siting, configuration of equipment, pipe headers, etc.) to allow plant expansion to install a redundant/backup chiller in the future.

(5) The heating plant for process cooling shall be provided with a redundant boiler (steam or hot water) to allow full heating capacity with the largest boiler out of service. Standby boiler and system pumps shall be provided, equal in size to the largest active pump in service. Boiler sizes and pressures shall be in a range that allows an unmanned heating plant in accordance with AFI 32-1068.

(6) Humidification system is required with or without process cooling. Humidification shall be provided for the hangar by direct steam injection or by self generating humidifiers. If steam is used for humidification, system shall operate at 65% (minimum) capacity with the largest steam boiler out of service. Steam system (if used) for humidification shall be completely independent from steam used for process heating.

Table 1 – Paint Bay Heating and Ventilating Requirements

Mode	**Airflow (m/s)**	**Temperature Heating (Deg C)**	**Cooling (Deg C)**
Paint and Chemical Operation	*18.3 m/s (60 fpm)	20 deg C (68 deg F), 35% RH min	Ventilate (base bid) 25.5 deg C (78 deg F), 60% RH max (Note 1)
Non-Chemical Operation	Reduced Airflow	20 deg C (68 deg F), 35% RH min	Ventilate (base bid) 25.5 deg C (78 deg F), 60% RH max (Note 1)
Curing	Reduced Airflow	30 deg C (86 deg F), 35-55% RH	N/A
Unoccupied	Intermittent	10 deg C (50 deg F)	Note 2

* Minimum average air velocity in the aircraft zone. Actual required airflow shall be calculated by the proposers.

Note 1: Cooling setpoints if process cooling option is exercised.

Note 2: Unoccupied mode shall cycle supply air system (reduced airflow) as required to maintain temperature for freeze protection.

6.3 GENERAL MECHANICAL REQUIREMENTS

Registered professional engineering services shall be required for mechanical design and specifications preparation for this construction contract. Refer to the Designer of Record requirements in SECTION 01012.

6.3.1 Material and Equipment

All materials and equipment shall be new and free from defects. Materials and equipment shall be proven to be satisfactory in commercial or industrial use for 2 years prior to the bid opening. The 2-year use shall include applications of equipment and materials under similar circumstances and of similar size. The product shall have been for sale on the commercial market through advertisements, manufacturer’s catalogs, or brochures during the 2-year period. All materials in the same category shall be the product of a single manufacturer (i.e., fans, gate valves, globe valves, sprinkler heads, etc.). All equipment shall be located to allow a minimum of 1 meter clearance around all access/service panels. Clearance around electrical and electrical panels shall be provided in accordance with the National Electrical Code (NEC). Access panels designed for removal and/or replacement of parts, which require greater than 1 meter (3 feet) for this activity, shall be provided with sufficient clearance to remove the largest and/or longest part of the assemblage. All access panels shall be appropriately labeled with stencils, or a minimum of 75 mm (3 inch) tall letters. Building mechanical equipment

shall be held in place with anchor bolts set in “green” concrete and held in place by plywood templates until the concrete has cured. Inertia pads shall be provided for equipment where recommended by equipment manufacturer. Housekeeping and vibration isolation pads shall be provided for mechanical equipment. Contractor shall provide all safety equipment required to operate and install the equipment.

6.3.2 System Maintainability

(a) System maintainability is a critical, but often overlooked, aspect of a facility. The contractor shall provide for maintenance of all items in this facility. This shall be coordinated with all systems (it is unacceptable planning to install lights, then block access to them with pipes and conduit). System maintainability has three broad categories. The design analysis and O&M manuals shall address these features/procedures in detail:

(1) Routine Maintenance (filters, lights, lubrication, inspection, etc.): This requires the most frequent and easiest access. The need for portable or fixed ladders (no more than 3 m (10 ft)) should be minimized and, where needed, ensure that space is available to use them properly. The exhaust/recirculation filter system is a special case and must be provided with permanent access (stairs, catwalks, hoists, platform lifts, etc., excluding ladders) to allow a five- to seven-person crew (in PPE) to simultaneously work on the filters at one time, including transporting clean filters up, replacing the filters, and collecting the dirty filters.

(2) Component Replacement (coils, fans, motors, boiler/chiller tubes, etc.): This requires less frequent access, but when the need arises, this work must be done quickly and efficiently, since normally this has the greatest impact on the user. Everything needed to perform these tasks shall be provided (work platforms, equipment access hatches/panels, hoists, cranes, freight elevators, etc.).

(3) Equipment Replacement (air handling unit, switchgear, boilers, chillers, etc.). This occurs very seldom so permanent equipment to support these tasks is not required. However, equipment replacement must be accommodated and the facility shall include items such as removable wall sections, access routes, etc. to allow replacement with the least amount of collateral damage.

(b) Ensure that all equipment, including filters, controls, control valves, backflow preventers, and coils are easily accessible and have ample room for servicing, inspection, and cleaning. Isolation valves shall be provided for each terminal unit, zone, branch, long runs, etc. as necessary for proper isolation and maintenance. As a minimum, process systems shall be provided so that no more than one side of the hangar bay need be shut off to work on the distribution system. Isolation valves shall be located in the equipment rooms, not in the hangar bay. Coils shall be fully removable without requiring demolition of any building components. Piping configuration at all coils shall include unions to facilitate easy coil removal.

(c) The design-build contractor shall ensure that all maintenance and repair activities can be performed safely and efficiently without needing to bring in extensive material handling (i.e. A-frames) or access equipment (i.e. ladders).

(d) Locate all valves, pumps, strainers, controls, sensors, and other items requiring regular service such that they may be maintained from floor

level when possible. If not accessible from floor level, then permanent maintenance access shall be provided.

(e) Ensuring maintainability requires careful coordination of piping, conduit, etc., to avoid blocking access by cranes, hoists, ladders, etc. The contractor shall make this a priority, recognizing that this will generally result in longer runs of pipe/conduit.

(f) All above ceiling utilities (cable trays, ductwork, junction boxes, utility piping, etc.) shall be accessible for a worker to reach two sides plus the service side with a minimum 1.0 m (3′-3″) clearance (greater if required for component maintenance/disassembly).

(g) Permanent maintenance access shall be provided for all suspended mechanical equipment. Refer to the Architectural section for requirements. Provide catwalks for all equipment requiring servicing located above ceilings.

(h) Roof-mounted equipment is prohibited.

(i) Water treatment systems for boilers/chillers/cooling towers (if provided) shall be designed and installed such that chemical handling is accomplished at floor level.

6.3.3 Operations/Maintenance Manuals

Operations and Maintenance Manuals – Contractor shall provide Operation Manuals, Maintenance Manuals and spare parts inventory lists for each piece of mechanical equipment. Contractor shall furnish control diagrams as part of as-built documentation. Refer to Section 01012 for requirements.

6.3.4 Operator Training

Contractor shall provide operator training for all systems for which an operation and/or maintenance manual is provided. In addition, the contractor shall provide video tapes of the training sessions. Training shall be in two parts; individual equipment training on each piece of equipment, and an integrated operational training session on the entire process (from turning on the lights, to towing the aircraft out of the dock and cleaning up). Training and manual shall be sufficient for someone with little or no prior experience in stripping aircraft would be able to properly set up the facility and equipment to strip an aircraft. Refer to Section 01012 for additional requirements.

6.3.5 Spare Parts

Contractor shall provide all manufacturers recommended spare parts for all mechanical systems.

6.3.6 Vibration Acceptance Criteria

All rotating equipment (facility or process) with a motor of 15 kW (20 hp) and larger shall be provided with a triaxial accelerometer cluster for each bearing (motor and driven equipment), and shall be vibration tested and aligned to be at or below 2.5 mm/sec (0.1 in/sec) velocity. Accelerometer shall be provided with a 4-pin connection, be fully hermetic, and be suitable for an industrial environment. Provide one hand held battery powered data collector to be used for both paint and depaint facilities. Accelerometers shall be factory mounted for equipment with motors located within a factory enclosure.

As part of the Testing and Balancing process, Contractor shall provide narrow-band, high-resolution triaxial spectral data to the Contracting Officer's Representative, and assist the government in placing the data into the existing government predictive maintenance software database.

6.4 PLUMBING REQUIREMENTS

Plumbing system shall be designed and installed in accordance with the International Plumbing Code (IPC), latest edition. Inspection and testing of the plumbing system shall be performed as prescribed in the IPC. The plumbing system shall conform with the applicable rules of the International Building Code, governing venting of plumbing fixtures, sizing of waste, vents, drains, and water systems. Backflow preventers shall be provided at the building entrance, located in an accessible location inside the building. Fixture count shall be as required by International Building Code. All piping shall be labeled, color coded, titled, and indicate direction of flow. All shutoff/isolation valves and water hammer arresters shall be accessible from the floor level. If installed above hard ceilings, access doors shall be provided. UFGS Section 15400A PLUMBING, GENERAL PURPOSE shall be the basis for the plumbing system specifications. UFGS Section 15190 GAS PIPING SYSTEMS shall be the basis for the gas piping system specifications.

6.4.1 Domestic Hot Water Temperatures

Hot water delivered to plumbing fixtures shall not exceed 49 deg C (120 deg F).

6.4.2 Plumbing Materials, Equipment and Fixture Requirements

6.4.2.1 Material for Domestic Water Lines

Water piping under concrete slab floors shall be copper tubing, Type K, annealed and shall be completely wrapped in polyethylene. Joints under the slabs are not permitted. Materials for various services shall be in accordance with Table II – Pipe and Fitting Materials for Pressure Piping Systems of UFGS Section 15400A PLUMBING, GENERAL PURPOSE. Pipe schedules shall be selected based on service requirement. Select one piping material for each type of system. Material or equipment containing lead shall not be used in any potable water system. Plastic pipe shall not be used for buildings exceeding 7.3 m (24 ft) in height.

6.4.2.2 Routing and Design

All piping shall be concealed, properly supported with allowances for expansion and contraction. Interior water distribution piping shall not be buried under concrete floors. All piping systems shall be drainable. Interior hot and cold water piping systems shall be insulated. Water piping systems (including sprinkler piping) shall not be routed or located where subjected to freezing and shall be located within the insulated building envelope. Heat tracing (to prevent freezing) of interior piping systems will not be allowed. Individual shutoff or stop valves shall be provided on water supply lines to all plumbing fixtures. Individual stops shall also be furnished at all equipment connections such as dishwashers, vending machines, icemakers, etc. Shower control valves shall be provided with integral stops (shut-offs). Isolation shutoff valves shall be provided for each toilet room group to allow isolation shutoff for maintenance purposes while continuing service to the remainder of the restrooms. Consolidate fixture vents through one common vent whenever possible. All vent penetrations through the roof shall be made through a roof jack designed for use with the roofing system

furnished and color-matched to the roof. Aboveground piping shall run parallel with the lines of the building and in accordance with UFGS Section 15400A PLUMBING, GENERAL PURPOSE, unless otherwise indicated. Emergency showers/eye wash stands located in the paint bay shall drain to the trench drains and thus to the industrial waste water system.

6.4.2.3 Material for Waste Lines

Materials for various services shall be in accordance with Table I – Pipe and Fitting Materials for Drainage, Waste, and Vent Piping System of UFGS Section 15400A PLUMBING, GENERAL PURPOSE. Pipe schedules shall be selected based on service requirement. Pipe fitting shall be compatible with applicable pipe. Plastic piping systems shall not be install in air plenums. Soil, waste, drain and vent piping installed in spaces used as HVAC air plenums shall be cast iron. Each fixture and piece of equipment requiring connections to the drainage system shall be equipped with a trap, and all fixtures shall be vented. Surface or wall cleanouts shall be provided for each drainage main. Cleanouts shall be provided at each change in direction of sanitary sewer lines, at the intervals specified in the Standard Plumbing Code, and at the building service entrance. All cleanouts shall be permanently accessible. Ground cleanouts shall be installed in a 305 mm by 305 mm (12″ x 12″), 100 mm (4 inch) thick concrete pad, flush with grade. Pipes passing through the slab shall pass through a pipe sleeve and be installed in accordance with UFGS Section 15400A PLUMBING, GENERAL PURPOSE.

6.4.3 Gas Piping and Connections

The use of semirigid tubing and flexible connectors for gas equipment and appliances is prohibited. Provide accessible gas shutoff valve and coupling for each gas equipment item. Materials for gas piping shall be in accordance with UFGS Section 15190A GAS PIPING SYSTEMS. Installation of interior gas piping shall be in accordance with NFPA 54 and AGA-01. Refer to the Civil Design Criteria section for gas distribution system located outside of the building.

6.4.4 Plumbing Fixtures

Fixtures shall be provided complete with fittings, and trim. All shutoff valves shall be metal construction. Plastic valves are not acceptable. All fixtures, fittings, and trim in a project shall be from the same manufacturer and shall have the same finish.

6.4.4.1 Plumbing shall meet the following criteria:

(a) In general, all faucets shall have solid brass bodies, ceramic valving, and chrome plated or trim. Water flow shall be no more than 0.16 L/s (2.5 gpm) from any faucet.

(b) Fixtures shall be water conservation.

(c) All vitreous china plumbing fixtures shall conform to ANSI A112.19.2M, Vitreous China Plumbing Fixtures. Stainless steel fixtures shall be in accordance with ANSI A112.19.3M, Stainless Steel Plumbing Fixtures (residential design).

(d) Floor drains shall be provided in toilet rooms, mechanical rooms and for equipment requiring drainage. Floor drains shall be cast iron body and grate. All floor drain traps shall be automatically primed by single trap primers or where appropriate, distribution unit type trap primers.

(e) Fixture descriptions shall be as described by the American Society of Mechanical Engineers, ASME A112.19.

(f) Provide hose bibbs for boiler, chiller, and mechanical rooms.

6.4.4.2 Water Closets

Siphon-jet, elongated bowl, top supply spud, ASME A112.19.2M, wall hung. Gasket shall be wax type. Seat - ANSI Z124.5, Type A, white plastic, elongated, open front. Flushometer Valve - ASSE ANSI/ASSE 1037, large diaphragm type with non-hold-open feature, backcheck angle control stop, vacuum breaker, and battery operated electronic actuation. Minimum upper chamber inside diameter of not less than 63.5 mm (2.5 inch) at the point where the diaphragm is sealed between the upper and lower chambers. The maximum water use shall be 6 liters (1.6 gal) per flush. Water closet trim shall conform to ANSI A112.19.5, Trim for Water-Closet Bowls, Tanks, and Urinals (Dimensional Standards). Any water closets designed as handicap water closets shall meet the top rim of the bowl height requirements of CABO A117.1.

6.4.4.3 Urinals

Wall hanging, with integral trap and extended shields, ASME A112.19.2M, siphon jet. Top supply connection, back outlet. Flushometer Valve - ASSE ANSI/ASSE 1037, large diaphragm type with non-hold-open feature, backcheck angle control stop, vacuum breaker, and battery operated electronic actuation. Minimum upper chamber inside diameter of not less than 63.5 mm (2.5 inch) at the point where the diaphragm is sealed between the upper and lower chambers. The maximum water use shall be 3.8 liter (1 gal) per flush. Urinal trim shall conform to ANSI A112.19.5, Trim for Water-Closet Bowls, Tanks, and Urinals (Dimensional Standards).

6.4.4.4 Wash Fountains

Accessible, flush to wall, linear design, wash-up fixture. Modular wash fountain station shall provide three hand washing stations with the centerline of each station located on 762 mm (30 inch) centers, perpendicular to the mounting wall. Hand washing station shall be wall hung, ADA accessible, secured to a rigid base concealing all supply and waste connections. Bowl material shall be cast polyester resin complying with ANSI Z124.3 and ANSI Z124.6, with decorative stone finish. Base shall support hand washing stations to ANSI Z124.3 load ratings. Each hand washing station shall have a liquid soap dispenser and be provided with a streamformer served by an independent solenoid valve and actuated by an infrared sensing module. Wash fountain shall include all waste and supply connections to wall, thermostatic mixing valve with stop, strainer and check valves.

6.4.4.5 Standard Shower

(a) Shower valve shall be single lever, pressure-balancing, thermostat mixing type, designed to maintain constant water temperature by automatically compensating for water pressure changes. Faucet shall be of solid brass construction with washerless ceramic valving. Adjustable pattern showerheads shall be provided and shall be chrome plated or polished nickel finish to match levers and escutcheons. Provide a flow control device with the shower head to limit the flow to a maximum of 0.16 L/s (2.5 gpm) at a flowing pressure of 550 kPa (80 psig).

(b) Drain - stainless steel.

6.4.4.6 Break Room Sinks

Provide two sinks, constructed of stainless steel. Faucets shall be same as the lavatory faucets in material, but designed for kitchen sink application.

6.4.4.7 Water Cooler Drinking Fountains

Water cooler drinking fountains shall be located in close proximity to each restroom and break room. Corridors which are distant from these rooms shall contain at least one water cooler drinking fountain as well. Water cooler drinking fountains shall be self-contained, conform to ARI 1010, use one of the fluorocarbon gases conforming to ARI 700 and ASHRAE 34 which has an Ozone Depletion Potential of less than or equal to 0.05, have a capacity to deliver 28.8 L/hr (7.6 gph) of water at 10 deg C (50 deg F) with an inlet water temperature of 26.6 deg C (80 deg F) while residing in a room environment of 32.2 deg C (90 deg F) and have self-closing valves. Self-closing valves shall have automatic stream regulators, have a flow control capability, have a push button actuation or have a cross-shaped index metal turn handle without a hood. Exposed surfaces of stainless steel shall have No. 4 general polish finish. Spouts shall provide a flow of water at least 100 mm (4 inch) high so as to allow the insertion of a cup or glass under the flow of water.

6.4.4.8 Wall Hydrants (Exterior)

Wall hydrants shall be provided at a maximum spacing interval of 60 m (200 ft) around the exterior wall of the building. Each hydrant shall be box type, freeze proof, with an integral vacuum breaker/backflow preventer. Hydrants shall have 20 mm (3/4 inch) hose connections.

6.4.5 Major Appliance Plumbing Connections

The Contractor shall provide appropriate connections for all appliances, vending machines, ice machines, and any other items requiring water and/or drain connections.

6.4.6 Domestic Water Heater

Domestic water heater shall be natural gas type, with a heating capacity and auxiliary storage adequate for the building occupancy. A pressure/temperature relief valve, vacuum breaker on the water supply line, drain and a 150 mm (6 inch) concrete pad shall be provided for the water heater and/or storage tank. Domestic hot water heater shall be equipped with a recirculation pump and recirculation piping and balancing valves.

6.4.7 Testing

Test soil, waste and vent piping by capping or plugging and filling the system with water, allowing it to stand filled for 1 hour. If tested in sections, each section shall be subjected to not less than a 3 m (10 ft) head.

Test cold water, hot water, and hot water circulating by applying a hydrostatic pressure of 860 kPa (125 psig) for 1 hour.

Test piping under floor slabs in floor fill before slabs are poured.

Soldered piping which is not tight under tests shall be taken down and reassembled. Joints in cast iron hub and spigot pipe not tight under test shall be replaced. Joints in cast iron no-hub pipe not tight under test shall be taken down and reassembled using new couplings.

Test each fixture for soundness, stability of support and operation. Fixture shall exhibit no movement from an 82 kg (180 lb) person exerting moderate force on fixture.

Submit a statement certifying that piping has passed the herein specified tests.

Tests shall be made while pipe is exposed to view.

6.4.8 Piping Materials

UFGS Section 15400A Table I and II shall be the basis for plumbing systems and materials.

6.5 HEATING, VENTILATING, AND AIR CONDITIONING REQUIREMENTS

6.5.1 General

The heating, ventilation, and air conditioning equipment shall be as described herein.

6.5.2 Mechanical Design References

The mechanical systems will be designed in accordance with the Base Facility Standard (BFS) – Robins AFB, GA, ASHRAE standards, and Military Handbooks.

The following design criteria and standards shall be used in the mechanical systems design:

- Savannah District Engineering Design Manual for Military Construction, dated February 2002, Revised August 2002.
- Savannah District Drafting Standards.
- ASHRAE Manuals, latest edition.
- NFPA 90A, Installation of Air Conditioning and Ventilating Systems.
- NFPA 90B, Installation of Warm Air Heating and Air Heating and Air Conditioning Systems.
- ASHRAE Standard 62, Ventilation for Acceptable Indoor Air Quality.
- Technical Instructions, Design Criteria, T1-800-01, 20 July, 1998.
- TM 5-805-4 Noise and vibration Control for Mechanical Equipment.
- TI 809-4 Seismic Design for Building.
- TI 810-10, 1 FEB 99, Mechanical Design, Heating, Ventilating, and Air Conditioning
- MIL-HDBK-1190 Facility Planning and Design Guide
- Base Facility Standard (BFS) – Robins AFB, GA
- UFC 3-400-02, Design: Engineering Weather Data, 28 Feb 2003.

6.5.3 Motors

Single phase, fractional-horsepower, alternating-current motors shall be high efficiency types, corresponding to the applications listed in NEMA MG 11. Polyphase motors shall be selected based on high efficiency characteristics relative to the applications as listed in NEMA MG 10. Additionally, all polyphase squirrel-cage medium induction motors with continuous ratings shall meet or exceed energy efficient ratings in accordance with Table 12-10 of NEMA MG 1.

6.5.4 Variable Frequency Drives

The same manufacturer shall provide all variable frequency drives (VFD's) used on electric motors for system components. Variable frequency drives shall be solid-state, with a Pulse Width Modulated output waveform. The VFD's shall employ a 12 pulse full wave rectifier, DC Line Reactor, capacitors and insulated Gate Bipolar Transistors as the output-switching device. The drive efficiency shall be 97% or better at full speed and full load. Fundamental power factor shall be 0.98 at all speeds and loads. Enclosure shall be NEMA Type 1, or as dictated by location. The VFD's shall have a door interlocked disconnect switch and a manual bypass switch, which allows servicing of the drive while the driven equipment is operating. Variable frequency drives must be set-up during testing and balancing procedures. A control interface shall be provided to allow for remote monitoring of VFD functions and alarms from the DDC control system front-end computer.

6.5.6 Metering: Gas, Electricity, and Potable Water

Potable water, electric, and gas meters shall all have pulse outputs, data collection/communication capability and shall be compatible with Robins AFB Standards. All meters shall be monitored by the SCADA system primary / DDC system secondary.

6.5.7 Cathodic Protection

All ferrous underground piping, including all underground structures, tanks, etc., shall be cathodically protected using a sacrificial anode system designed in accordance with the requirements of Section 8 of these specifications.

6.5.8 HVAC Calculations

Design Criteria: Heat gain and loss calculations shall be, as a minimum, in accordance with the current edition of the American Society of Heating, Refrigeration, and Air Conditioning Engineers (ASHRAE) Handbook of Fundamentals. Computer generated loads must be submitted with complete input and output summaries during the design process. Load calculation software must be ASHRAE based. The cooling equipment shall be selected based on satisfying both the total and latent calculated loads. System shall be designed, installed, balanced, and adjusted to distribute heating and cooling to all habitable rooms, in proportion to the calculated heat losses/gains in these rooms. Heating shall also be provided to mechanical rooms, and other unoccupied areas as needed to prevent pipes from freezing.

Verify ventilation rates of each space with the referenced publications in this mechanical design section. Conduct air balance calculations for the spaces in the facility to verify total supply air, outdoor air, return air, and exhaust air. The space (airflow) pressure relationships shall be maintained. Administrative areas shall maintain a positive pressure with respect to outdoors and the hangar to aid in keeping generated pollutants and hazardous particles out of the office supply airstream. Total airflow calculations shall be performed to verify that the administrative area pressure is positive with respect to outdoors and to the hangar.

Air locks shall be provided between the clean and dirty locker rooms and shall be pressurized to -10 Pa (-.04 in w.c.) relative to clean side and +20 Pa (+.08 in w.c.) relative to dirty side. The design shall reflect heating and cooling capacities based on the following design conditions.

6.5.9 Heating, Ventilation, and Air Conditioning (HVAC)

6.5.9.1 Comfort HVAC

Comfort heating and cooling shall be provided by a central packaged air handling unit with DX cooling and indirect fired, natural gas fired heat. Zone control shall be provided by variable air volume diffusers with hot water duct heating coils for zone heating. For energy conservation, an enthalpy heat recovery wheel shall be provided in the air handling unit to recover energy from the toilet/locker room exhaust air stream.

(a) Comfort Cooling Systems Design: Comfort cooling for the administrative/occupied areas shall be provided by the packaged DX air handling unit, mounted on grade adjacent to the facility. System shall be designed for 23.8 deg C (75 deg F) cooling and 50% relative humidity.

(b) Comfort Heating System Design: Comfort heating for the administrative/ occupied areas shall be provided by an indirect fired, natural gas fired burner in the packaged air handling unit. Individual space heat shall be provided by hot water duct heating coils, fed from forced-draft gas-fired, hot water boilers with redundant hot water pumps. System shall be designed to maintain 21.1 deg C (70 deg F). Provide humidification if required to maintain 30% RH minimum. Electric heating shall be prohibited for comfort applications, except where used in Computer Room Air Conditioning Units.

(c) Air Distribution Zoning: The air handling systems shall be zoned by functional requirements, operation schedules and environmental control conditions, and load characteristics.

(d) Individual Room Requirements: Refer to Appendix C – Functional Room Requirements, for specific minimum requirements for space heating, ventilating, and air-conditioning.

6.5.9.2 Ventilation Systems Design

Ventilation for building occupants shall be provided in accordance with ASHRAE Standard 62, latest revision. Unit shall maintain a constant minimum outside airflow by electronic airflow measurement station as required. The outside air intake shall be located away from fumes including vehicle exhaust, toilet exhaust, etc., and in accordance with Force Protection requirements. Exhaust systems shall exhaust all toilet rooms, janitor's closets, lockers, and other spaces as required.

6.5.9.3 Electrical Rooms And Mechanical Rooms

(a) Mechanical Rooms shall be heated and ventilated. The space shall be maintained at 12.8 deg C (55 deg F) in winter and maximum of 5 deg C (9 deg F) above outside design ambient in summer. Ventilation shall be positively introduced within the mechanical room.

(b) Electrical Room shall be conditioned and have individual room temperature control. The space shall be maintained 30 deg C (86 deg F) in summer and 12.8 deg C (55 deg F) in winter, or as recommended by the electrical gear manufacturer. Space cooling shall account for closely spaced electrical gear. Room conditions shall be sufficient to keep interior cabinet temperatures within a range to allow a full 20-year life from all components.

(c) Communication Rooms shall be maintained at 26.7 deg C (80 deg F) in summer and 18 deg C (65 deg F) in winter.

6.5.9.4 Paint Bay Heating and Ventilation

The Paint Bay shall be provided with heating and ventilation as described in the Process Heating, Ventilating, Cooling, and Exhaust (PHVCE) System paragraph.

6.5.9.5 Weather Data

Robins AFB:

Summer: 34.4 deg C (94 F) dry bulb / 24.4 deg C (76 F) coincidental wet bulb (1% Occurrence)
25.6 deg C (78 F) wet bulb / 31.7 deg C (89 F) coincidental dry bulb (1% Occurrence)

33.3 deg C (92 F) dry bulb / 23.9 deg C (75 F) coincidental wet bulb (2% Occurrence)
25.0 deg C (77 F) wet bulb / 31.1 deg C (88 F) coincidental dry bulb (2% Occurrence)

Winter: -2.2 deg C (28 F) dry bulb (99% Occurrence)

All systems, with the exception of the optional process cooling, shall be sized for the worst case cooling loads at 1% DB/MCWB and 1% WB/MCDB outside air conditions. Process cooling plant capacity shall be sized for the worse case 2% DB/MCWB and 2% WB/MCWB. Refer to Appendix R for Robins AFB Weather Data.

6.5.9.6 Internal Loads

All internal loads shall be considered when calculating cooling loads for air conditioning and ventilation.

6.5.10 Life Cycle Cost Analysis

A life cycle cost analysis is not required under this contract. The administrative and conditioned areas shall be conditioned with a constant volume air handling unit with direct expansion (DX) cooling coil, indirect fired gas heat, and an enthalpy heat recovery wheel. Zone control shall be provided by variable air volume diffusers with hot water reheat coils as required for perimeter heat. System shall be provided with a bypass damper to maintain duct static pressure. Variable air volume (VAV) units are not acceptable. Exhaust from the toilets, locker rooms, etc. shall be ducted through the enthalpy heat recovery wheel to recover heat from the exhaust air stream.

Computerized energy calculations shall be performed using Trane TRACE700, Carrier Hourly Analysis, BLAST, DOE-2, or EnergyPlus programs. Calculation shall be based on actual expected hours of operation, energy usage, and shall include process/miscellaneous loads. Provide the complete input (room, systems, system assignment, plants, plant assignment, custom members, custom schedules) and output of the energy analysis program.

6.5.11 Energy Conservation

Public Law 100-615 and Federal Regulations 10 CFR 435 Subpart B, require Federal buildings to be designed and constructed to reduce energy consumption in a life-cycle, cost-effective manner using renewable energy sources when economical. Each system, component or feature selected that impacts the energy or water use of the facility shall be in compliance with ASHRAE

Standard 90.1. ASHRAE Standard 90.1 is essentially the same as 10 CFR 435, and like 10 CFR 435 presents several conformance paths. The path selected to show compliance with ASHRAE Standard 90.1 shall be clearly identified. In addition, energy efficiency ratings for equipment shall be in the upper 25 percent of that available as long as these efficiencies are life cycle cost effective. The Department of Energy (DOE) and Federal Energy Management Program recommendations from the Buying Energy Efficient Products Guide and the Environmental Protection Agency Star products program meet these requirements. The DOE recommendations are available at www.eren.doe.gov/femp/procurement. Submittals from the successful bidder shall be in compliance with above and address energy conservation features such as economizer cycles, variable frequency drives, heat recovery, etc.

Energy consumption budget for the entire depaint facility: In addition to the DEU budget, which excludes process loads, Executive Order 13123 requires reducing industrial (process) energy usage by 20% on a “unit of production” basis. For this process the unit of production is square meter of aircraft surface. The annual energy consumption budget for this facility is 656 kw-hr/m^2 aircraft surface (208 MBtu/sf aircraft surface area) based on 26 C-5 aircraft/yr at 2500 m^2/aircraft (26,910 sf/aircraft), including process cooling. Facility operational hours are 20 hours/day, 5 days/week. Lower energy consumption will be considered an advantage.

6.5.11.1 Energy Budget Calculations

An Energy Analysis shall be performed to determine a design energy usage (DEU) budget. The DEU shall be calculated and compared to the maximum energy use budget value (EUB) for facility type A1 for weather region 11 per ETL 94-4.

The goal for this facility is to provide a DEU that is 20% less than the EUB. Proposers that exceed the 20% less than the EUB shall not be considered non-responsive but will receive a lower rating. The DEU shall include air conditioning, heating, ventilating, lighting, and domestic hot water usage for the facility. The DEU budget shall not include process loads. Process energy load is the energy consumed in support of all functions other than comfort and amenities for building occupants (refrigerators, stoves, computers, instruments etc.).

The operational hours for the calculation shall be 10 hours/day, 5 days/week for the facility type. Use 0700-1600 as the 10-hour period for energy budget calculations. The DEU budget shall be based on availability of energy systems during 10 hours. For the remaining 14-hour period lights, people, heating, air conditioning, and ventilating will be scheduled as OFF.

The area used in the DEU budget estimation is the gross floor area which is defined as the sum of all floor areas, measured from the outside of the exterior walls.

Calculation of the DEU shall be performed by computerized methods. Computerized calculations shall be performed using the Trane TRACE 700 or the Carrier Hourly Analysis programs. Detailed, room-by-room calculations shall be performed with the energy simulation calculated for 8,760 hour per year.

Conversion Factors. Energy use or savings shall be calculated using the following factors. These conversion factors are given by ETL 94-4. Equipment efficiencies and system losses must be accounted for in calculations. For energy media not listed here, use current standard Engineering data or other approved reference data.

ENERGY MEDIUM	CONVERSION FACTORS
Natural Gas	10.66 kWh/m^3 (1030 Btu/cf)

Electricity	1 kWh/kWh

The DEU budget calculations (including all input and output information) are to be submitted by the successful proposers at the concept design stage. All proposers must submit in their proposals a statement that they will provide a facility that does not exceed the energy budget.

6.5.11.2 U-Values

Utilize the U-values presented below as a starting point. These values may be modified if a life cycle cost analysis indicates that a more cost effective value should be used. The life cycle cost analysis shall be based on the Department of Energy (DOE) Federal Energy Management Program (FEMP) criteria according to the provision of the latest version of Code of Federal Regulations, 10 CFR 436A. For guidance on the methodology, refer to National Bureau of Standards Handbook 135, Life Cycle Costing Manual for the Federal Energy Management Program.

Nominal U-Values (W/m^2*K) for Exposed Floors, Ceilings, and Walls

Heating Degree Days: 2547 Ref 18.3 deg C (65 deg F)
Cooling Degree Days: 2271 Ref 18.3 deg C (65 deg F)
Opaque Walls: 0.852 W/m^2*K (0.15 $Btu/hr*ft^2*F$)
Gross Walls: 1.532 W/m^2*K (0.27 $Btu/hr*ft^2*F$)
Ceiling/Roof: 0.323 W/m^2*K (0.06 $Btu/hr*ft^2*F$)
Floor: 0.568 W/m^2*K (0.10 $Btu/hr*ft^2*F$)

The U-values above are taken from ETL 94-4, Attachment 6, for weather region 11. Coordinate actual U-values with the architectural design of the facility.

6.5.12 Acoustical Criteria

Systems shall be designed to meet the following noise criteria during full paint system operation. Contractor shall calculate noise levels based on actual equipment provided, and considering all sound sources such as equipment, number of users, heating and ventilation system, room effect, etc.:

Area	**NC Level (dBA)**
General offices	35
Break room and locker rooms	40
Equipment Rooms (including air handling unit equipment and service corridors)	75 dBA max at 1 m from equipment 50 dBA max in adjacent corridors
Paint Hangar	80 dBA goal, 90 dBA maximum at the worker 78 dBA max - non painting operation (include AHU and EF sound sources)
Exterior	60 dBA @ 1.5 m from equipment or equipment enclosures, 2 m above grade

Acoustical treatment such as sound-attenuating wall construction, duct lining, and sound attenuators shall be used to achieve these levels. Any spaces not specifically listed above shall be coordinated with the user.

Vibration transmission from equipment shall be minimized with the use of vibration isolation equipment as required.

6.5.13 Testing, Adjusting, and Balancing

The mechanical system testing, adjusting, and balancing (TAB) shall be in accordance with UFGS Section 15995 COMMISSIONING OF HVAC SYSTEMS and in accordance with the Base Facility Standard (BFS) – Robins AFB, GA. TAB requirements shall be clearly detailed on the design drawings and shall be clearly stated in the construction specifications to ensure the HVAC systems are properly installed, balanced and calibrated prior to building occupancy. TAB procedures shall be in accordance with ASHRAE Standards.

Refer to TESTING, ADJUSTING, AND BALANCING Section for additional requirements.

6.5.14 Mechanical Equipment

Mechanical equipment shall be designed in accordance UFGS guide specifications listed in this section of mechanical design. The equipment described below is a minimum. All materials and equipment provided shall be standard catalogued products of manufacturers regularly engaged in the production of such materials and equipment shall be of the manufacturers' latest standard design. Equipment shall comply with the requirements of Underwriter's Laboratories, Inc. (UL), Air Conditioning Refrigeration Institute (ARI), American Society for Testing and Materials (ASTM), National Electric Manufacturer's Association (NEMA), American National Standards Institute (ANSI), National Fire Protection Association (NFPA), or other national trade associations as applicable.

All pieces of floor mounted mechanical equipment shall be installed on a 150 mm thick concrete equipment pad. Provide pad 150 mm larger than equipment footprint on all sides. Install dowel pins into floor slab prior to pouring equipment pad. All suspended equipment shall be properly supported according to the manufacturer's instructions. Provide trapeze hangers for larger pieces of equipment. Provide adequate clearance around all pieces of equipment for periodic maintenance, inspection and cleaning. Service of one piece shall not require disturbance of adjacent equipment.

Each piece of motorized equipment shall be provided with vibration isolators with seismic restraints. Nominal deflection and natural frequency of isolation equipment shall be selected based upon equipment size and structural attachment details.

All strainers and air separators are to be equipped with blowdown valves and piped to a floor drain.

The mechanical room shall be separate from the electrical utility room and be accessible from an exterior door. The mechanical room shall house any central equipment for facility comfort conditioning (air handling units may be located outside to conserve building space). All equipment shall be accessible from the first floor or mezzanine level.

Mechanical components shall be installed and mounted in accordance with TI-809-4 "Seismic Design for Buildings." The design for seismic protection shall be based on a seismic Use Group II.

6.5.15 Air Handling Equipment

6.5.15.1 Fans

Fans shall be AMCA 210 certified, with AMCA seal. Fan bearings shall have a minimum average life of 200,000 hours at design operating conditions. Provide

accelerometers for all motors 20 kw (15 hp) and larger. Provide nominal 2-mesh, 1.6 mm (16 gage) wire diameter, bird screens for outdoor inlets and outlets. Fan submittals shall include vibration isolation details.

6.5.15.2 Comfort Conditioning Air Handling Unit

(a) Comfort conditioning air handling unit shall be a factory packaged unit. Unit shall include an air cooled condensing section, DX cooling coil (may be chilled water if process cooling option is exercised), indirect gas-fired heat, mixing box, heat pipe sections, filter section, and draw-through supply fan. Fan shall be ARI 430 certified and coils shall be ARI 410 certified. Units shall be rated as an entire assembly. Unit shall be constructed of 50 mm (2 inch) thick preinsulated double wall panels of solid galvanized steel. Unit construction shall be in accordance with UFGS Section 15895 Air Supply, Distribution, Ventilation, and Exhaust System.

(b) A minimum 610 mm (24 inch) access section with door shall be provided upstream of each coil or heating section. Maximum cooling coil face velocity shall be limited to 152 meters per minute (500 fpm). Cooling coil section shall be provided with an IAQ-rated stainless steel drain pan, with liquid drain trap and cleanout plug that shall be easily accessible for maintenance purposes.

(c) Mixing box shall be factory fabricated and configured with dampers to promote mixing of return air and outdoor air streams. Provide filter sections with 35% ASHRAE efficient pre-filters and minimum 75% ASHRAE efficient final filters. Control dampers shall be constructed to provide no more than 50.8 $L/s/m^2$ (10 cfm/ft^2) air leakage at 995 Pa (4 in w.c.).

(d) Supply fan section shall be equipped with non-overloading centrifugal fan mounted on a steel base frame. Fan base shall be isolated from air handling unit base rails by the use of housed spring isolators. Fans shall be V-belt driven by belt drives sized for 150% of design power requirement. Provide adjustable sheaves for fans up to 15 kW (20 hp).

(e) A control interface shall be provided to allow for remote monitoring of AHU functions and alarms from the DDC control station. Air handling equipment that has corrosion protection must comply with ASTM A 1654, using a standard scratch. Large air handlers, requiring personnel entry for maintenance purposes shall have lights and one 120V electrical outlet installed in each section.

6.5.15.3 Process Heating and Ventilating Air Handling Units

(a) Process Heating and Ventilating Air Handling Units: Air handling units shall be factory-packaged or semi-custom units with filter section, heating section, humidifier, and supply fan. Units shall be constructed of 50 mm thick pre-insulated double-wall panels, with maximum 1% cabinet leakage at 125% of the system static pressure. Unit construction shall be in accordance with the requirements of UFGS Section 15895 AIR SUPPLY, DISTRIBUTION, VENTILATION, AND EXHAUST SYSTEM and as specified herein. Exterior air handling units shall be provided with an enclosed service vestibule, and shall be factory-coated, custom-color to match adjacent facility. Control algae/mold on exterior of units. For units located on grade, provide a ventilated curb under the unit or provide other acceptable means to control algae growth. Do not place units directly on the concrete slab. These air handling units are subject to the same maintainability requirements as other areas of the facility.

(b) Outside air intake section shall be factory fabricated and configured with OA dampers and outside air louver or intake hoods. Dampers shall be constructed to provide no more than 50.8 L/s/m^2 (10 cfm/ft^2) air leakage at 995 Pa (4 in w.c.). Provide filter sections with 30% ASHRAE efficient pre-filters and minimum 85% ASHRAE efficient primary filters.

(c) Heating section shall be provided with a hot water heating coil or indirect-fired gas burner (direct fired heat is not acceptable). Hot water heating coils shall have integral face and bypass dampers for freeze protection. Gas heat shall be capable of a turndown ratio of 30:1 (minimum), provided with UL listed gas train with all safeties and controls. Exhaust from gas burners shall be vented to avoid cross-contamination of outside air intakes for other H&V or HVAC units.

(d) Humidifier shall be direct steam injection or self generating type. Unit length shall account for humidifier dispersion length, such that the humidifier vapor trail does not impinge on any other component in the air handling unit.

(e) Supply fan section shall be equipped with non-overloading centrifugal fan, with airfoil or backward inclined blades, mounted on a steel base frame. Fan base shall be isolated from air handling unit base rails by the use of housed spring isolators. Fans shall be V-belt driven by belt drives sized for 150% of design power requirement.

(f) A control interface shall be provided to allow for remote monitoring of AHU functions and alarms from the DDC control station. Air handling equipment that has corrosion protection must comply with ASTM A 1654, using a standard scratch. Large air handlers that require personnel entry for maintenance purposes shall have lights and one 120V electrical outlet installed in each section.

*(6)
6.5.15.4 Process Cooling Air Handling Units (Bid Option)

(a) Process cooling air handling units shall be semi-custom air handling units capable of providing conditioned air to the hangar to maintain the specified temperature and humidity requirements within ±2 deg C (4 deg F) temperature and ±5% relative humidity. Units shall provide 100% conditioned outside air to mix with the return air from the hangar to provide air of the appropriate temperature and humidity to condition the hangar, and shall have a 25 year service life. Unit shall contain an outside air section with intake louver, filter section, preheat section, cooling coil section, reheat section, humidifier, and supply fan(s).

(b) Cabinet shall be constructed of 100 mm (4 inch) thick insulated double wall panels (14 gauge exterior and 16 gauge interior panels) with maximum 1% cabinet leakage at 125% of the system static pressure. Unit construction shall be in accordance with UFGS Section 15895 AIR SUPPLY, DISTRIBUTION, VENTILATION, AND EXHAUST SYSTEM and as specified herein.

(c) Exterior units shall be provided with a sloped roof and an enclosed service vestibule, and shall be factory-coated, custom-color to match the adjacent facility. Control valves and VFD’s shall not be exposed to the weather. Control algae/mold on exterior of units. For units located on grade, provide a ventilated curb under the unit or provide other acceptable means to control algae growth. Do not place units directly on the concrete slab. These air handling units are subject to the same maintainability requirements as other areas of the facility.

(d) Outside air intake section shall be provided with OA dampers and an intake air louver. Damper shall be constructed to allow no more than 50.8 L/s/m2 (10 cfm/ft^2) air leakage at 995 Pa (4 in w.c.).

(e) Filter section shall be provided with ASHRAE 30% efficient prefilters and 85% efficient final filters.

(f) Preheat section shall be hot water heating coil with integral face and bypass dampers for freeze protection, or by indirect gas-fired heat.

(g) Cooling coils shall be sized to provide adequate cooling and dehumidification at the worse case 1% summer DB/MCWB or 1% WB/MCDB temperature. This requirement is intentionally more stringent than sizing the chiller plant for the 2% summer design temperatures. Particular attention shall be paid to the selection and rating of the chilled water coils to meet the discharge air temperatures required to provide adequate cooling in the hangar while providing 20% outside air.

(h) Reheat coil, if required for off-peak conditions, shall be hot water, or indirect gas-fired heating section, sized to provide heating capacity required.

(i) Humidifier shall be direct steam injection or self generating type. Unit length shall account for humidifier dispersion length, such that the humidifier vapor trail does not impinge on any other component in the air handling unit.

(j) Supply fan section shall be equipped with non-overloading centrifugal fan, with airfoil or backward inclined blades, mounted on a steel base frame. Fan base shall be isolated from air handling unit base rails by the use of housed spring isolators. Fans shall be V-belt driven by belt drives sized for 150% of design power requirement.

(k) A control interface shall be provided to allow for remote monitoring of AHU functions and alarms from the DDC control station. Air handling equipment that has corrosion protection must comply with ASTM A 1654, using a standard scratch. Large air handlers that require personnel entry for maintenance purposes shall have lights and one 120V electrical outlet installed in each section.

6.5.15.5 Heat Pipes

Heat pipes for heat recovery systems shall be factory fabricated, assembled and tested, installed in a counterflow arrangement. Tube cores shall be seamless aluminum tube with extended surfaces. Tubes shall be hermetically sealed. Heat exchanger frame shall be constructed of not less than 16-gauge galvanized steel and fitted with intermediate tube supports and flange connections. Provide tube end covers and a partition of galvanized steel to separate exhaust and supply air streams without cross-contamination. A non-CFC refrigerant shall be used as the working fluid.

6.5.15.6 Exhaust Fans

(a) Paint Bay Exhaust and Return Fans: Fans shall be selected for the intended use, with operating point within 10% of peak efficiency. Fan casings shall be provided with bolted or hinged access plates adequate for inspection and servicing of internal parts. Sound rating shall conform to ANSI/ASHRAE 68. Fans shall be constructed of materials compatible with materials utilized in the paint bay.

(b) Miscellaneous Fans: Exhaust fans shall be cabinet type, inline, or wall mounted. Roof mounted fans are not acceptable. Fans shall be V-belt driven by belt drives sized for 150% of design power requirement. Provide adjustable sheaves for fans up to 15 kW (20 hp). Small fans not available with V-belt drive may be directly driven. Motor selection shall permit non-overloading operation at all conditions. All fans shall be provided with vibration isolators to decouple the motor assembly from the fan housing. Suspend fans with vibration isolators from building structure.

6.5.16 Ductwork

All ductwork shall be designed and installed in accordance with applicable SMACNA standards. Except as allowed or required in these documents, ductwork shall be constructed of galvanized steel, in accordance with SMACNA DCS and Round Industrial DCS and suitable for the pressure required in the system, and suitable for the final operating pressure of the system. The Contractor shall take into account that final T&B adjustments may increase the operating pressure above the original design conditions. Bends in rigid ductwork shall be at a minimum radius to diameter ratio of 1.5. Each duct branch shall be fitted with a manual balancing damper. All ductwork shall be located above slab, supported from roof structures. Return air shall be ducted to unit from each space. Ceiling return air plenums shall not be used for the administrative or support areas. Duct return shall maintain NC-25 requirements at rooms for general occupancy space. Test ductwork in accordance with SMACNA 10. Total duct leakage shall not exceed 2%. Access must be provided to all devices or areas that may require periodic inspection, including but not limited to balancing devices, motor operated dampers, flow measuring stations, smoke/fire dampers, etc. Provide permanent test ports in ductwork at balancing test points and DDC sensor locations. Provide manual balancing dampers at each take-off to a diffuser, register, or grille, located as far away from the air outlet as practical.

6.5.16.1 Flexible Ductwork and Connections

Flexible duct shall be in conformance with UL 181 and may be used only for connections to air distribution devices to adapt minor offsets. Flexible duct shall be UL 181 listed and in accordance with SMACNA DCS. Provide the minimum length required to make connections, but not greater than 1.5 meters in total length. Do not make turns over 45 degrees with flexible duct. The purpose of flexible duct is to make minor adjustments between rigid ductwork and devices suspended in the ceiling grid.

Flexible connectors shall be provided between all fans and ducts.

6.5.16.2 Duct Insulation

All interior supply, return and relief ductwork shall be insulated with exterior insulation. Insulation, vapor barrier, and closure systems shall be noncombustible as defined in NFPA 255, with a flame-spread rating of not more than 25, and a smoke developed rating of not more than 50, as defined in ASTM E 84. Vapor barrier coating is required at all insulation terminations and penetrations for stick pins, and at all insulation seams and all insulation penetrations. Exposed heating only or exposed return air ductwork shall not be insulated. Insulate back of all air devices on air handling unit systems.

All exposed ductwork insulation shall be factory-fabricated rigid insulation board. Concealed insulation may be duct-wrap or rigid. Insulation shall be faced with a vapor barrier material having a performance rating not to exceed 1.0 perm. Ductwork located outside shall be moisture-proof to maintain the integrity of the insulation throughout its life. Options include, but are not

limited to: A standing seam insulation jacket, dual-wall system, or rigid insulation, covered with a 100% acrylic fabric-reinforced system.

Insulation thickness shall be determined (1) by life cycle cost or (2) heat gain/loss not to exceed 1.0 deg C (2 deg F) against a design basis summer and winter condition, whichever is thicker.

6.5.16.3 Ductwork Identification

Ductwork shall be identified by stenciled names or code letters, in clearly visible locations. Letters shall be a minimum of 75 mm (3 inch) tall, with arrow-shaped markings indicating the direction of flow.

6.5.16.4 Air Distribution Devices

Air distribution devices shall be factory-furnished grilles, registers and diffusers constructed of aluminum. Exterior and exposed edges shall be rolled or otherwise stiffened and rounded. All registers and diffusers shall be provided with factory-fabricated volume dampers. Balancing dampers in ductwork shall be installed so as to be inaccessible to the occupants of the space being served (in the take offs from the duct branches rather than in the diffusers). Supply air diffusers for comfort cooling system shall be variable volume diffusers.

6.5.16.5 Dampers

Damper design and installation shall comply with SMACNA DCS. For low pressure rectangular duct systems, use 45-degree entries and manual volume dampers into branches from the main duct. Provide manual volume dampers in each branch take-off from the main duct to control air quantity.

6.5.16.6 Fire Dampers

Fire dampers shall be provided in accordance with UL 555. Fire dampers shall be of the dynamic type, rated for closure against a moving airstream.

6.5.16.7 Smoke Dampers

Smoke dampers shall be rated in accordance with UL 555S.

6.5.17 Louvers

Outdoor air intake and exhaust louvers shall be aluminum or stainless steel, designed to prevent the entry of rain or snow. Intakes shall be located a minimum of 10 m (32 ft) from the nearest exhaust outlet and exterior mechanical equipment. Intakes shall be either 3 m (9.8 ft) above grade or shall be protected by a chain link fence 3 m (9.8 ft) from the intake, in accordance with force protection requirements. Provide louvers with birdscreens and factory finished with the color in accordance with the Base Facility Standards.

6.5.18 Heating Equipment

6.5.18.1 Hot Water System

The hot water heating system shall include gas-fired hot water boilers and circulation pumps as required to provide reheat for the comfort heating spaces. System shall include a minimum of two 65% capacity boilers.

A hot water heating system may also be provided for the heating requirements for the hangar bay process air handling units.

Hot water boiler system shall be within a size/pressure range to allow unattended operation (maximum size of 8,793 kW (30,000 Mbtuh)) in accordance with AFI 32-1068. Boilers shall be minimum 85% efficient. Manufacturer's standard packaged operation controls shall be provided to handle all aspects of capacity modulation and safeguarding. Pumps shall be base mounted and selected for non-overloading operation at all conditions. Closed coupled pumps are not acceptable. Provide a standby / redundant pump for each system. Heating systems shall be provided in accordance with UFGS Section 15569A – WATER AND STEAM HEATING; OIL, GAS OR BOTH; UP TO 20 MBTUH.

Heating water piping shall be Type L copper or ASTM A 53 Schedule 40 black steel. Ball valves shall be utilized for sizes up to 75 mm (3 inch). Larger piping shall be equipped with plug valves. Butterfly valves are not acceptable. Piping supports shall be in accordance with MSS SP-59 and MSS SP-69. System shall include an air separator, expansion tank, chemical bypass feeder and makeup water connections.

Equip circulation pumps with strainers, check valve, balance valve, flexible connections and isolation valves to permit pump maintenance. Pipe pump body drain and air vents from expansion tank to nearest floor drain. Provide pressure gages arranged such that pump differential pressure may be witnessed. Entire pump assembly shall be mounted on a structural steel frame equipped with housed spring vibration isolators.

Provide automatic water flow control valves at each coil and balancing valve in each loop of piping branch. If pumps are 11 kw (15 hp) or larger, then provide 2-way valves and VFD’s on the circulation pumps. Provide accelerometers for all motors 20 kw (15 hp) and larger.

Arrange system to ensure minimum required flow through boilers at all times. Distribution piping shall be designed as a reverse return system, with maximum water velocity of 1.2 m/s (4 fps). Piping shall be routed to provide the greatest accessibility for maintenance. Provide drain valves to allow complete system drainage and air vents at high points and coils. Air vent valves shall be installed to allow operation from 2.5 m (8 ft) above finish floor without the use of a stepladder. Heating hot water piping shall be insulated, and piping passing through hangers shall have rigid insulation shields.

6.5.18.2 Steam System (if used)

A steam system may be provided to serve the direct steam injection humidifiers in the process air handling units. System shall include a minimum of two gas-fired steam boilers, each sized for 65% peak load. System shall include boiler feedwater equipment, water softener, reverse-osmosis (RO) system, water filter, blow down steam separator and aftercooler, and condensate return pumps. Chemical water treatment is not allowed. Manufacturer’s standard packaged operation controls shall be provided to handle all aspects of capacity modulation and safeguarding. Humidification steam system shall be completely independent of the hot water heating system. Steam system shall be provided in accordance with UFGS Section 15569A – WATER AND STEAM HEATING; OIL, GAS OR BOTH; UP TO 20 MBTUH.

Steam piping shall be ASTM A 53 Schedule 80 black steel, with Schedule 80 black steel used for steam condensate return piping. Gate valves shall be utilized for open-close applications. Globe valves shall be utilized for modulating application. Piping supports shall be in accordance with MSS SP-59 and MSS SP-69. Piping shall be routed to provide the greatest accessibility for maintenance. Condensate return shall be piped separately from pumped

condensate return. Piping shall be insulated, and piping passing through hangers shall have rigid insulation shields.

6.5.19 Chilled Water Equipment

This chilled water equipment is for the hangar process cooling option. Chillers shall be provided in accordance with UFGS Section 15620A – LIQUID CHILLERS. Manufacturer’s standard packaged controls shall be provided to handle all aspects of chiller staging and safeguarding. Chilled water and condenser water pumps shall be base mounted and selected for non-overloading operation at all conditions. Close coupled pumps are not acceptable. Provide induced draft or forced draft cooling towers as applicable for water cooled chillers and in accordance with UFGS Section 15645A COOLING TOWERS. Provide chilled water chemical bypass feeder and complete automatic condenser water treatment system. Provide accelerometers for all motors 20 kw (15 hp) and larger.

Chilled water and condenser water piping and accessories shall be provided in accordance with UFGS Section 15181A – CHILLED AND CONDENSER WATER PIPING AND ACCESSORIES. Piping shall be Type L copper or ASTM A 53 Schedule 40 black steel with threaded or welded joints. Ball valves shall be utilized for sizes up to 75 mm (3-inch). Larger piping shall be equipped with plug valves. Butterfly valves are not acceptable. Piping supports shall be in accordance with MSS SP-59 and MSS SP-69. System shall include an air separator, expansion tank, chemical bypass feeder, makeup water connections, chemical treatment systems, and surge tank if volume is not adequate. Equip circulation pumps with strainers, check valve, balancing valve, flexible connections and isolation valves to permit maintenance. Pipe pump body pressure gauges arranged such that the pump differential pressure may be witnessed. Entire pump assembly shall be mounted on a structural steel frame equipped with housed spring vibration isolators with seismic snubbers.

Provide automatic water flow control valves at each coil and balancing valve in each loop of piping branch. If pumps are 11 kw (15 hp) or larger, then provide 2-way valves and VFD’s on the circulation pumps.

Arrange system to ensure minimum required flow through the chillers at all times. Each chiller shall have a dedicated primary chilled water pump. Distribution piping shall be designed as a reverse return system, with maximum water velocity of 1.2 m/s (4 fps). Piping shall be routed to provide the greatest accessibility for maintenance. Provide drain valves to allow complete system drainage and air vents at high points and coils. Air vent valves shall be installed to allow operation from 2.5 m (8 ft) above finish floor without the use of a stepladder. Chilled water piping shall be insulated and provided with a vapor barrier. Piping passing through hangers shall have rigid insulation shields.

6.5.20 Process Piping

Process water piping shall be electric resistance welded or seamless Schedule 40 black steel pipe conforming to ASTM A 53. Piping 100 mm (4 inch) and smaller may be Type L copper, depending on design pressure and temperature in accordance with ASTM B 88. Wherever copper pipe is used, the Contractor shall certify that copper is compatible with the materials carried in the piping (i.e., soap solutions, etc.). Chemical process piping shall be suitable for the chemical services. Leak points shall be minimized. Non-metallic pipe may be used for any appropriate service except aboveground compressed gases. Provide piping systems based on a 25-year life, considering the effect of temperature (ambient and process) on the life of the system. Contractor shall avoid, wherever possible, the use of dissimilar metals in contact with each other in piping system. If such unions must be made, an insulating flange

shall be provided. Provide permanent test ports in piping at all major system components (i.e., pumps, water softener, etc.). Fittings shall be ANSI B16.3 malleable iron with screwed connections, ANSI B16.11 socket weld connection, or threaded type for piping 50 mm (2 inch) and smaller. Fittings for piping 65 mm (2 1/2 inch) and larger, shall be ANSI B16.9 butt-welded, or ANSI B 16.5 flanged type. Copper pipe fittings shall be ANSI B 16.18 cast bronze solder joint, or ANSI B 16.22 wrought copper, solder joint type. Provide sufficient insulation and vapor barrier to prevent condensation on all cold water piping. Process piping run above dropped ceilings shall be equipped with secondary containment and appropriate drain lines, connected to either the Industrial Waste Water, or Sanitary Sewer system(s).

6.5.20.1 Process Pumps

Process pumps shall be base-mounted, positive displacement piston style or CPI centrifugal pumps, unless specified otherwise. All pumps shall be provided with strainers and suction diffusers. Wetted parts shall have excellent resistance to the chemical encountered. Provide bypasses on all strainers so that they may be cleaned without plant shutdown.

6.5.20.2 Process Valves

Valves shall be provided as needed to facilitate isolation of liquid conveying systems and for flow control purposes. Valve stems shall extend outside insulation as needed to allow for easy access and operation. Metal valves shall have all metal construction.

6.5.20.3 Process Storage Tanks

Water and soap storage tanks shall be ASME rated atmospheric tanks with appropriately sized, pressure relief systems, vented outside the building envelope.

6.5.21 Direct Digital Controls

6.5.21.1 General

(a) Direct Digital Controls (DDC) shall be used to control HVAC systems and equipment. The DDC controllers shall be a product of a manufacturer of existing systems at Robins AFB: Johnson Controls, Honeywell, or Invensys. All equipment provided shall be connected with all functions monitored and fully controlled through one of aforementioned base-wide systems. Building main control panel shall be connected to the base communication network via modem connection. Functionality shall be no different than if the operator was directly connected to the local communications network. Provide manual override for all digital and analog outputs, including but not limited to dampers and motors. Safety switches shall be provided for all control panels and other devices as necessary.

(b) Stand alone equipment, such as boilers supplied with packaged controls, shall be installed with all necessary additional communications support equipment for interface with the base-wide DDC system.

(c) DDC system shall monitor and control all critical functions of each piece of equipment. Graphics package shall be developed with the standard controls system software to depict unit and system configurations, with real-time indication of conditions, and visual indication for parameters outside setpoint. Graphics package shall include a sequence of operation for each system. Indication shall include, but not be limited to, the following:

- On/Off status of all equipment
- Pump and fan status (monitored with control relays)
- Alarm status of all equipment
- Setpoints for packaged equipment (boilers, chillers, etc.)
- Heating coil entering and leaving air temperatures
- Cooling coil entering and leaving air temperatures
- Air handling unit mixed air temperature
- Heat wheel entering and leaving air temperatures
- Air handling unit filter differential pressure
- Air handling unit leaving air temperature
- Air handling unit smoke detector status
- Air handling unit damper position
- Room temperature and humidity (if controlled)
- Heating coil supply and return water temperatures
- Cooling coil supply and return water temperatures
- Exhaust fan status
- Airflow, for systems with airflow monitors
- Pressure drop across hangar exhaust filters
- Process ventilation fan on/off status and flow status
- Differential pressure between hangar and outside (pressure indication and alarm)
- Breathing air monitor status
- Compressed air system pressure
- Utility meter (electric, gas, water) input

(d) Paint Control Panel: Provide a control panel for the paint hangar, located adjacent to the hangar bay. Control panel shall serve as the user interface to the DDC system for operating the paint bay, and shall include the following:

- Paint/Prep/Cure/Off selector switch
- Heat/Ventilate/Cool (process cooling option) selector switch (this shall be a mode switch that will initiate the required setpoints and equipment start/stops for the process selected)
- Paint/Prep/Cure/Off status light
- Heat status light
- System Alarm light
- Space temperature indication
- Space temperature setpoint
- Space static pressure indication
- Space supply airflow rate
- Space supply air temperature
- Space exhaust airflow rate

6.5.21.2 Controls System Specifications

The automatic temperature controls shall be designed in accordance with UFGS Section 15951 Direct Digital Control For HVAC. All control devices shall be labeled with laminated plastic tags using unique identifiers, which are cross referenced to the control drawings. Power source (panel and circuit number) for each DDC control panel shall be clearly and permanently indicated on the control panel and on the controls drawings. Provide training by an employee

whose normal occupation with the company include DDC and controls system training.

6.5.21.3 Thermostats

Thermostats shall be single setpoint type with continuous display of temperature setpoint and room temperature. Maximum differential shall be 1 deg C (1.8 deg F). Caution shall be taken not to install thermostats in the center of a wall or location that would interfere with furniture placement, or on an exterior wall. Thermostat shall not be located in location subject to unrepresentative temperatures, such as locations opposite bathroom doors, laundry room doors, or exterior doors. Due to uncertainty of final systems furniture layout, coordinate location of thermostats with user during the design phase. Electrical rating shall not exceed 2.5 amperes at 30 volts ac. Housing shall be corrosion resistant metal or molded plastic.

6.5.22 Guide Specifications

The mechanical system design, submittal, and testing and balancing process shall conform to the latest edition of the Corps of Engineers Guide specifications. Refer to Section 01010 – GENERAL PROJECT DESCRIPTION AND DESIGN REQUIREMENTS for a list of proposed specification sections. Performance requirements may involve work not addressed in the guide specifications, and additional UFGS sections may be required during the design process.

7.0 ELECTRICAL TECHNICAL DESIGN CRITERIA

7.1 SUMMARY

Provide an electrical system, complete in place, tested and approved, as specified herein, and as required for a complete, proper, and efficient installation. The design and construction shall incorporate quality materials and promote energy conservation that will be of value to the Air Force in the foreseeable future. The requirements in this document are in addition to, and take precedence over, those required by the Base Facility Standards document.

7.2 DESCRIPTION

The electrical design shall coordinate with all other disciplines involved with the facility design and provide wiring for all equipment connections, extensions, and modifications needed, including, but not necessarily limited to all HVAC equipment, plumbing systems and equipment, lift stations, aircraft dock, administrative space, building support, production support, special support areas and aircraft ramp areas. As this facility will incorporate the most modern painting technologies, the electrical designer shall become familiar with the process involved and provide all necessary power and communications requirements.

7.2.1 Aircraft Dock Area

The dock shall have an aircraft static grounding system, and electrical outlets including 120 volt, 1 phase, 3 wire 60 hertz receptacles, 208Y/120 volt, 3-phase, 4-wire receptacles, 480 volt, 3-phase, 4-wire, 60 hertz receptacles, and a 200Y/115 volt, 3-phase, 4-wire, 400 hertz receptacle. The dock will be equipped with a sliding hangar door connected to emergency power. Provide a key-operated switch on the exterior of the facility for control of power for the hangar doors. In addition, all electrical devices, boxes,

fittings, and fixtures installed in the dock area shall be suitable and approved for the applicable hazardous area classification.

7.2.2 Building Support Areas

The building support area shall include space for door tracks, walls, columns, aisles, airlocks, electrical equipment, communications equipment, and mechanical room space. These areas shall have HVAC, lighting, dropped ceiling, sprinkler system, compressed air, electrical receptacles (120 V, 220 V, 480 V), emergency eye wash/shower, and sanitary waste floor drain.

7.2.3 Production Support Areas

The production support area shall consist of space for paint storage, paint mixing, protective clothing, shop equipment repair, painting equipment storage, and a small parts paint booth that meets all federal, state and local regulatory requirements.

7.2.4 Aircraft Ramp Areas

The facility shall include aircraft pavement to access the aircraft ramp; parking for vehicles, relocation of equipment and utilities as necessary and connection to existing base utilities.

7.3 Site Conditions

This facility is the second phase of a two-dock facility to repaint C5 aircraft. This second building is the actual painting facility.

Before construction can begin on this new painting facility, Buildings 52, 53 and 56 and their associated buildings/facilities must be removed from the site.

Power for this new paint facility should be available from the new circuit installed in the duct bank which was relocated in Phase I of this project. Copper and fiber optic communications services will be brought to this facility by others through an existing manhole located in the northwest area of the site.

7.4 QUALITY ASSURANCE

7.4.1 Design

7.4.1.1 General Design: Registered professional engineering services shall be required for electrical design and specifications preparation for this construction contract.

7.4.1.2 Communications

All voice and data communications design shall be performed by a Registered Communications Distribution Designer (RCDD).

7.4.2 Construction

7.4.2.1 Electrical Wiring

Only certified journeymen electricians or apprentices under the direct supervision of journeymen will be permitted to install, alter, or repair electrical systems.

7.4.2.2 Communications Wiring

The communications media (telephone cables, computer LAN cables, or fiber optic cables) shall be installed by Building Industry Consulting Service International (BICSI) registered cabling installation technicians.

7.4.2.3 Materials

All electrical equipment shall be new and shall be provided by the Contractor unless specifically indicated otherwise. Material and equipment shall be a standard product by a manufacturer regularly engaged in the manufacture of the product and shall be essentially duplicate items that have been in satisfactory use for at least 2 years prior to award of contract. All materials in the same category shall be by a single manufacturer (i.e. panelboards, switchgear, transformers, etc.).

7.4.2.4 Repair of Existing Structures

During construction, the Contractor shall be responsible for the repair of existing structures (to match existing) after installation or removal of electrical equipment required by design. This repair shall be done in a neat and workmanlike manner in accordance with local industry standards and acceptable to the Contracting Officer.

7.5 PERFORMANCE REQUIREMENTS

7.5.1 Basic Electrical Requirements

(a) All wiring, both indoor and outdoor, shall be designed in accordance with the applicable provisions of the latest edition of NFPA 70, Air Force (AF) regulations, and Robins AFB policies. Field verification of site location and electrical utility routing shall be made by the Contractor. Existing as-built drawings may be used as guidelines, but “information must be verified by field investigation”. The Designer shall be responsible for the verification of all dimensions, measurements, and location of existing facilities, utilities, equipment and other existing conditions that may affect the design. Existing electrical/communications equipment and wiring (conductors and conduit) shall be rearranged or rerouted as required for the installation of the new facility. Only new medium voltage cables shall be utilized. Any medium voltage cables removed fro ducts shall be disposed of.

(b) Ensure adequate clear space around electrical equipment in accordance with the National Electric Code.

(c) A separate green grounding conductor shall be included in each feeder and branch circuit conduit to all electrical devices.

(d) Fire stops shall be provided at all locations where electrical equipment or systems penetrate fire rated walls. Fire stops shall be rated equal to or greater than the wall penetrated.

(e) No more than three branch circuit phase conductors shall be contained in any branch circuit conduit and all shall be of different phases. In a single-phase system no more than two branch circuit phase conductors shall be contained in any branch circuit conduit and shall be of opposite phases. Do not share neutrals.

(f) All wiring (including, but not limited to, power, fire alarm, telephone, intercom, communications, control, etc.) shall be in metal conduit, and

all conduit shall be concealed above ceiling, under floor, or in walls, to the maximum extent possible.

(g) No exposed conduit or piping shall be permitted on exterior building surfaces.

(h) Penetrations into electrical equipment and devices located outside shall be made in the bottoms of enclosures, not the sides or tops. Provide weep holes at the low point of such conduit which will potentially accumulate water.

(i) Disconnects for mechanical and other equipment on the outside of buildings shall be mounted 457 mm (18 inches) above grade with the exception that the top shall not be higher than the top of the equipment.

(j) Four spare 21 mm (3/4 inch) conduits shall be stubbed from each recessed panelboard to above an accessible ceiling.

(k) Electrical service to the building shall be underground.

(l) RAFB has verified adequate capacity in circuits 3 and 5 to support the Paint and Depaint facilities.

(m) Electrical wiring shall meet ADA requirements for the following spaces: Rest rooms, break room, and administrative areas, unless indicated otherwise.

(n) A 103 mm (4 inch) thick concrete housekeeping pad shall be provided and installed for all new floor-mounted electrical equipment unless noted otherwise. The concrete housekeeping pad shall have chamfered edges and extend 103 mm (4 inches) from face and sides of electrical equipment

(o) Provide requirement of at least 25% spare spaces and capacity for all electrical equipment including transformers, motor control centers, switchboards and panelboards.

(p) Provide complete electrical support for all equipment and mechanical systems, HVAC, pumps, controls and dampers.

(q) Contractor shall provide temporary electrical service as part of design package. All temporary wiring shall be in accordance with NFPA 70. All temporary outlets shall be GFI protected.

(r) Locate electrical equipment to allow reasonable access for maintenance. Avoid locating equipment on roofs due to maintenance problems. Provisions shall be made for removal of equipment for maintenance. Assure that proper distance between system components and walls is maintained to ensure ability to clean, repair, or replace system components.

(s) Provide local disconnect switches for remote controlled equipment such as air handlers and exhaust fans.

(t) Contractor shall furnish instruction manuals and spare parts inventory requirements for each piece of electrical equipment. Contractor shall also furnish necessary control diagrams in accordance with ETL 83-1. Two 711 mm x 1016 mm (28″ x 40″) mylar control drawings for each installation shall be furnished. One is to be mounted on a wall in a frame, under plexiglass in equipment rooms. The other is to be furnished to 778 CEG/CECM to become part of the facility "as-built" drawings.

(u) Contractor shall provide Operation and Maintenance Manuals for any electrical equipment requiring periodic maintenance and or inspections.

(v) Ensure that equipment items that require periodic maintenance and repair have sufficient manufacturer's identification data permanently affixed. Contractor shall provide copies of parts identification manuals and installation and maintenance instructions, customarily furnished with the equipment.

(w) Robins AFB utilizes the master keying system provided by the BEST Universal Lock Co. The designer shall clearly specify that only those cores that are compatible with the BEST master keying system shall be used. Locks shall be supplied with construction cores. Individual locks shall be provided for exterior electrical service equipment.

(x) The Contractor shall provide training for each electrical system (generators, electronic systems, etc.) installed.

(y) All excavations, trenches, and open manholes shall be properly shored, braced, barricaded, or guarded. Warning lights or other illumination maintained from sunset to sunup shall be placed at all excavations that are adjacent to pedestrian or vehicle thoroughfares. Adequate physical protection shall be provided at all remotely located excavations.

(z) Contractor personnel shall not enter manholes, tunnels, tanks, or confined spaces until such entry complies with the requirements of OSHA 1926.21(6)(i). Government personnel will not enter manholes, tunnels, tanks, or confined spaces until a confined space entry permit has been obtained from the WR-ALC Safety Office, Bio-Environmental Engineers, or the Base Fire Department.

(aa) Construction Over Buried Utilities: New construction shall not be placed over existing buried water, sewer, heating, compressed air, electric, or telephone utilities, except in extraordinary situations, and then only if special provision is made and agreed upon for maintenance access. In no case shall construction be placed over existing POL or natural gas lines.

(bb) Turn over all removed 15 kV switches and switchgear and all pad-mounted transformers to the Robins Air Force Base exterior electrical shop. Excess electrical equipment generated as a result of demolition work shall become the property of the Contractor unless stated elsewhere in this document and shall be removed from Robins Air Force Base.

(cc) In preparation for construction on this site, Buildings 53 and 56 must be demolished and the lighting services associated with a portion of the apron and a parking lot must be removed. The new facility shall include apron lighting to replace that removed during site preparation.

Demolition of the existing facilities mentioned above includes the removal and delivery to the exterior electrical shop of the associated medium voltage switches and all medium voltage primary transformers. All site lighting poles and fixtures being removed shall be disposed of per the direction of the Contracting Officer.

Any other electrical equipment or services not specifically identified here, but that will be affected by the new construction shall be either removed or relocated as appropriate.

(dd) All electrical equipment shown to be removed by Contractor shall include all associated hardware and raceway systems. The Contractor shall be responsible for all cutting and patching required for the performance of

his work. No structural members shall be cut without the approval of the Contracting Officer. The Contractor shall be responsible for the repair of existing structures to match existing required for installation or removal of electrical elements shown on drawings. This repair shall be done in a neat and workmanlike manner in accordance with local industry standards and acceptable to the Contracting Officer.

(ee) Electrical circuits disturbed during demolition shall be restored to their previous conditions.

(ff) Adjustable trip circuit breakers shall include adjustable long time, long time delay, short time, short time delay, instantaneous, ground fault and ground fault delay elements.

(gg) Note that this facility shall be fed by double ended unit substations per the Base Facility Standard. These double ended substations shall include load break, fused, medium voltage switches, less flammable or non flammable oil filled transformers and outdoor walk-in secondary switchgear. Cable termination space in this switchgear shall have lockable, hinged doors. The transformers shall be 55/65 C rise plus fans. The maximum permitted base transformer size shall be 2500 kVA. Note that the metering required by the Base Facility Standard is also to be provided. One spare feeder breaker of each size provided (minimum of two) shall be provided in the secondary switchgear, with appropriately sized conduit installed between the switchgear and the facility electrical room for future use.

7.5.2 Drawings

(a) Electrical system layouts shall be generally diagrammatic and unless specifically required, the location of outlets and equipment shall be approximate. The exact location of outlets, lighting fixtures, equipment and wiring shall be governed by structural conditions and obstructions, and shall be repositioned as required during construction at no additional cost to the Government. Where it is necessary for outlets or connections to be at specific locations, details shall be provided showing exact measurements. Coordinate all design so that interference between piping, architectural, and structural work shall be avoided.

(b) Drawings shall indicate the general routes of all branch circuits. All home runs shall be indicated as starting from nearest outlet and pointing in direction of panel as though their routes where shown in their entirety. All branch circuit home run conduits shall be run continuous to the branch circuit panel. The designer shall coordinate with reflected ceiling plans to ensure sufficient clearance for lighting fixtures.

(c) Riser and one-line diagrams shall show only vertical and electrical relationships and therefore need not include all required equipment, devices, and accessories. Riser diagrams shall be required on all electrical services 100 amps (75 HP) or larger.

(d) Equipment interrupting capacities shall be shown on the contract documents based upon equipment characteristics and impedance values of the equipment being installed. Interrupting capacities shall not be reduced to values less than those required by the design fault current calculations.

7.5.3 Raceways

(a) Conduit shall be Electrical Metallic Tubing (EMT), Galvanized Rigid Steel (GRS), Intermediate Metallic Conduit (IMC), Rigid Aluminum Conduit, Schedule 40 PVC, or Type DB PVC.

(b) Schedule 40 PVC conduit may only be used under slabs or underground encased in concrete.

(c) Flexible metal conduit shall only be used for equipment connections (appliances, and motors only) in lengths not exceeding 2.0 meters (6.5 ft) and shall not be used for general wiring applications.

(d) All 400 hertz circuits shall be installed in Rigid Aluminum Conduit when used above grade or PVC conduit when installed in contact with earth or embedded in concrete. Aluminum Conduit shall not be used in contact with earth or embedded in concrete.

(e) Exposed raceways shall be installed parallel or perpendicular to walls, structural members, or intersections of vertical planes and ceilings. Wiring above lay-in ceilings is considered exposed (as applied to wiring methods).

7.5.4 Wires and Cables

(a) All wire shall be copper.

(b) No metal-clad cable, (Type MC), shall be permitted.

(c) All branch circuits, lighting circuits, and feeder circuits shall be THWN/THHN. Wire shall be solid for #10 AWG and smaller and stranded for #8 AWG and larger (except stranded shall be used for luminaire connections). #14, 12, and 10 AWG conductors shall be twisted together before installing twist-on pressure connectors (wirenuts).

(d) Indoor wiring above 480 volts shall be in appropriately marked rigid steel conduit. In the hangar dock, all conduit shall be rigid galvanized steel of IMC. EMT, RGS or IMC shall be used in all other spaces for raceways. All conduit shall be utilized/installed per the National Electrical Code.

(e) All medium voltage circuits shall be copper conductors, with XLPE insulation rated 133% with anti-treeing agent and outer jacket, and separate 600 volt neutral and ground conductors.

(f) Underground secondary wiring shall be made of copper conductors at least as large as required by NEC, with thermoplastic insulation rated for 600 volts and 90 degree C temperature rating in wet locations. All ungrounded conductors, both the grounded conductor (if any) and the grounding conductor shall be installed in a concrete-encased type "DB" conduit of at least the size required by NEC.

(g) Primary Loop Feeder: Medium voltage cables shall be copper, 15 kV, XLPE 133% insulation with anti-treeing agent, with PVC jacket (500 kcmil, a #4/0 , 600 volt neutral and a #4/0, 600 volt ground conductor). Conductors shall be protected by a 129 mm (5 inch) diameter concrete encased type “DB” PVC conduit.

(h) Primary Radial Feeder: Medium voltage cables shall be copper, 15 kV, XLPE 133% insulation with anti-treeing agent, with PVC jacket #2 or #4/0 AWG, and a #2 AWG or larger, 600 volt ground conductor). Conductors shall be protected by a 129 mm (5 inch) minimum diameter type “DB” PVC concrete

encased conduit. Encased conduits shall have at least 76 mm (3 inches) of concrete protecting them on every side. Where two or more conduits share the same encasement, there shall be at least 38 mm (1 1/2 inches) of concrete between adjacent conduits at all points. The top of the encasement concrete shall be at least 762 mm (30 inches) below final grade level at all points.

(i) Medium Voltage Cable Terminations and Splices: All insulated coverings for terminations and splices shall be of the preformed type and physically held in place. Application of tape type covering for terminations or splices is prohibited.

7.5.5 Wiring Devices

(a) All cover plates for receptacles and switches shall be stainless steel in administrative areas and plated steel in industrial areas.

(b) All electrical devices shall be flush mounted except where noted otherwise and in mechanical rooms.

(c) Receptacle outlets shall be the same ampere rating as the breakers that feed them to prevent receptacle overload without breaker trip.

(d) An electrical outlet shall be provided adjacent to each pay phone outlet (exterior or interior) and each water cooler.

(e) A minimum of one 120 volt ground fault circuit interrupter outlet for maintenance purposes will be provided at each air handling unit.

(f) In support and administrative areas, provide a minimum of one general purpose, 120 volt, 20 ampere duplex receptacle per wall in each room. In rooms where walls exceed 2.44 meters (8 ft) in length, provide an additional duplex outlet for each additional 2.44 meters (8 ft) of wall or fraction there-of. Receptacles spacing shall not exceed 2.44 meters (8 ft). General purpose receptacles are in addition to special purpose and dedicated outlets for special equipment.

In the stencil room, provide a minimum of two, 120 volt, 20 ampere, duplex receptacles per wall. In walls longer that 2.44 meters (8 feet), provide additional 120 volt, 20 ampere duplex receptacles for each additional 1.22 meters (4 feet) of wall.

(g) Each LAN outlet shall be provided with an adjacent duplex receptacle on an independent single phase (20 ampere, 120 volt) circuit having not more than four duplex receptacles and a nonshared neutral.

(h) Coordinate power and communications outlet locations with the furniture layouts.

(i) Provide five dedicated, independent circuits for FAX and copy equipment and laser printers. Coordinate their locations with the users.

(j) Provide ground fault circuit interrupter receptacles in bathrooms and wet areas. Provide ground fault circuit interrupter receptacles on both sides of mirrors and between sinks in bathrooms. Exterior receptacles shall be ground fault circuit interrupters and shall be rated for use with plugs inserted.

(k) All receptacles installed shall be of the grounding type.

7.5.6 Supports

(a) All conduit and boxes shall be securely fastened in place by means of clamps, clips, hangers, etc. designed for that purpose; No “Tie-wire” shall be permitted. Conduit and boxes shall be installed in a neat and workmanlike manner in accordance with local industry standards and acceptable to the Contracting Officer.

(b) Support conduits within 607 mm (24 inches) of each end of each bend, or each termination, and at intervals along the run that will maintain true raceway alignment without sag or deformation (maximum 3 meters (9.8 ft) on center). On exposed raceways, provide supports at a maximum of 2 meters (6.5 ft) on centers and on each side of each bend. Two-hole straps shall be used on flat surfaces for conduit 27 mm (1 inch) and larger. Conduit shall not be supported by suspended ceiling or suspended ceiling support wires.

(c) All overhead electrical equipment, piping, cable trays, light fixtures and components shall be constructed and assembled to resist 0.5 times the equipment weight in any direction and 1.5 times the equipment weight in the downward direction at the center of gravity of the equipment.

7.5.7 Identification

(a) Color Coding: All conductors shall be color-coded; colored tape may be used on conductors #6 AWG and larger at all manholes, handholes, terminations and junction boxes. A green equipment grounding conductor shall be installed in each branch circuit raceway. All circuit conductors shall be factory color coded as follows:

(1) 120 volt, 2-wire circuit: Grounded Neutral, White: Ungrounded Leg, Black.

(2) 240/120 volt, single-phase, 3-wire circuit: Grounded Neutral, White; 1 hot Leg, Black; 1 Hot leg; Red.

(3) 208Y/120 volt, 3-phase, 4-wire circuit: Grounded Neutral, White; Phase A, Black; Phase B, Red; Phase C, Blue.

(4) 240 volt, 3-phase, 3-wire circuit: Phase A, Black; Phase B, Red; Phase C, Blue.

(5) 240/120 volt, 3-phase, 4-wire systems SHALL NOT BE UTILIZED.

(6) 480/277 volt, 3-phase, 4-wire circuit: Grounded Neutral, Gray; Phase A, Brown; Phase B, Orange; Phase C, Yellow.

(7) 480 volt, 3-phase, 3wire circuit: Phase A, Brown; Phase B, Orange; Phase C, Yellow.

(b) Major items of electrical equipment shall be permanently marked with an identification name to identify the equipment by type or function and specific unit number as indicated. Unless otherwise specified, all identification nameplates shall be made of laminated plastic with black outer layers and a white core. Edges shall be chamfered. Plates shall be fastened with black-finished round-head drive screws or approved non-adhesive metal fasteners. The following equipment, as a minimum, shall be provided with identification nameplates: Panelboards, safety switches, transformers, switchgear, 200 ampere and larger feeder circuit breakers, and major electrical equipment and control devices. Letters shall be a minimum of 6.35 mm (1/4 inch) in height.

(c) Warning Tape - A 5-mil brightly colored plastic tape not less than 76 mm (3 inches) (9.8 ft) in width and suitably inscribed at not more than 3 meters on centers with a continuous metallic backing and a corrosion resistant 1-mil metallic foil core to permit easy location of duct line, shall be placed approximately 300 mm (12 inches) below finished grade directly above underground conduit runs.

(d) Underground High Voltage Conduits shall be identified by a 102 mm (4 inches) wide, red plastic marker tape with the words "Danger - Buried High Voltage Cable" placed directly over underground high voltage ducts. Marker shall be no more than 150 mm (6 inches) below finished grade. Marker tape shall include a continuous metallic backing and a corrosion resistant 1-mil metallic foil core to permit easy location of duct lines.

(e) All outlet backboxes shall be labeled with the voltage and circuit number per AFOSH requirements.

7.5.8 Grounding

(a) Provide all grounding systems in accordance with NFPA 70 and AFI 32-1065.

(b) Provide aircraft static grounding system in hangar bay dock area. Grounding outlets shall be on a 10-meter (32 ft) grid in the aircraft dock area. The static grounding system shall be interconnected with the lightning protection counterpoise.

(c) The grounding system counterpoise shall include a #4/0 AWG minimum sized, copper cable interconnecting the associated grounding rods and completely encircling the building.

(d) A minimum of every other perimeter building column shall be connected to the counterpoise system with the average interval not exceeding 20 meters (65 ft).

(e) All underground and concealed connections shall be welded.

7.5.9 Transformers

(a) Low-voltage transformers shall have Class 220 insulation systems rated for 80 or 115C temperature rise.

(b) ETL 1110-3-412, “Transformer Application Guide”, will be used in the selection and application of transformers and dielectrics. For those areas with high nonlinear load, ”K” factor rated transformers are required. Provide a schedule identifying the “K” factor rating for each area.

7.5.10 Panelboards

(a) Panelboard directories shall be typewritten, to indicate loads served by each circuit and be mounted in a holder behind a clear protective covering when a new panelboard is installed or an existing panelboard is altered.

(b) All panelboards shall have copper buses.

(c) Panelboards shall have main circuit breakers with appropriate circuit breakers for branch circuits. All breakers shall be the bolt-on type.

(d) A grounding bus, separate from the neutral bus, shall be provided in all panelboards.

(e) All panelboards serving computer equipment or dedicated electronics loads shall be provided with integral Transient Voltage Surge Suppressors.

7.5.11 Nonlinear Loads

(a) In all areas, motors with variable speed drives, electronic ballasts and dimmers and other similar loads, ETL 1110-3-403, "Electrical Power Systems for Nonlinear Loads," dated 30 June 1989; IEEE Std 1100 "Powering and Grounding Sensitive Electronic Equipment", and IEEE Std. 519, "Practices and Requirements for Harmonic Control in Electrical Power Systems" shall be used as design guides.

(b) K-rated transformers shall be used to serve nonlinear loads. Ratings will be based upon type of load served. Panelboards and load centers serving nonlinear loads shall have double-rated neutral buses. Motors connected to the same power source as nonlinear loads shall also be upgraded in size similarly. True RMS sensing meters, relays, and circuit breaker trip elements shall be used with nonlinear loads.

(c) Run oversized neutral conductors from the step down transformer to the service panelboard. The neutral ampacity shall be 1.75 times the phase conductor ampacity, or shall have a separate neutral conductor for each phase conductor.

(d) Branch circuits feeding receptacle outlets shall not share neutrals. Where homeruns are grouped together, provide three hot conductors, three neutral conductors, and two ground conductors. Neutral conductors shall be considered as current carrying conductors. When grouping home runs, conductor sizes shall be adjusted in accordance with NEC due to number of current carrying conductors.

(e) The use of 75- or 90-degree C (minimum) terminals and insulated conductors is required. The basic rule of the UL Electrical Construction Materials Directory states that in general “the termination provisions are based on the use of 60-degree C ampacities for wire sizes #14-1 AWG, and 75-degree C ampacities for wire sizes #1/0 AWG and larger, as specified in Table 310-16 of the NFPA 70.” Higher rated conductors than specified may be used if the size is based upon the previous statements.

7.5.12 Motors and Controllers

(a) Power factor correcting capacitors shall be connected on the load side of the motor controller for all motors 37.5 kW (50 hp) or larger.

(b) Provide phase reversal and phase loss relays for all motors, 37.5 kW (50 hp) or larger.

(c) Provide accelerometers on all motors 15 kW (20 hp) and larger.

(d) Provide soft start controllers or variable speed drives for all motors 37.5 kW (50 hp) and larger.

(e) Locate all variable speed drives (VSD) in the electrical room. Provide the necessary filter devices to prevent motor damage for motors located more than 30 meters (100 ft) from the VSD.

7.5.13 Electrical Service and Distribution

*(6)

(a) Circuit 3, in the 4-way switches near Manhole 28N, will provide power to the new paint facility. The transformers serving the double ended substation switchgear shall each be fed from a different 4-way switch such that the failure of any one switch or cable will not completely de-energize the substation. .

(b) Extensions of the base 12,470 volt underground power distribution loop shall be made with 500 kcmil, 15 kV copper phase conductors, with XLPE insulation rated 133% with an anti-treeing agent and outer jacket, and a #4/0 AWG, 600 volt neutral and a #4/0 AWG ground conductor. Conductors between the new 4-way switches and the substation transformers shall be #2 or #4/0 AWG of the same construction as the main loop conductors with a #2 AWG ground conductor.

(c) Only modular terminations and connectors shall be used with primary cables. Built up terminations are prohibited.

(d) The new facility shall be provided with digital KW/KWH/KWD/PF/Amp meters. Metering systems shall incorporate 120 volt secondary PTs. Meters shall all be checked and calibrated under load by qualified meter technicians. Meters, instrument transformers and all other utility metering systems shall be 100% compatible for monitoring via the existing base SCADA system. All metering shall be in accordance with ETL 94-2.

(e) All switchgear shall include power monitoring capability similar to Square D Power Logic on each feeder breaker on the main switchgear. All Equipment, fixtures and materials shall be UL listed and be suitable for use in the application of service.

(f) Medium voltage air switches shall be used in lieu of oil insulated switches.

(g) Install conductors from the new double-ended substations to the new facility with no splices. All equipment and wiring shall use copper conductors. Secondary switchgear with circuit breakers to feed equipment or panelboards shall be provided in the electrical room.

(h) All utility road and driveway crossings shall be bored and sleeved with schedule 80 PVC or 6.35 mm (1/4 inch) wall steel sleeves. Roads and driveways shall not be crossed by open cut unless approved. Wherever boring is impractical, street crossings shall be limited to 3 days maximum for any utility crossing roadway (including trenching, compaction, and replacement of existing pavements). Contractor shall provide steel matting sufficient to carry traffic loading over excavated area.

(i) Manholes/handholes - All electrical concrete manholes, handholes and pull boxes shall be of the precast type.

(j) For individual loads greater than 200 horsepower/200 kVA, 4160 volt electrical service may be utilized.

7.5.14 Lighting System

7.5.14.1 General Lighting

(a) Lighting shall be designed in accordance with the most current ETL concerning electrical energy conservation.

(b) Lay-in Light fixtures shall be individually served from an individual junction box directly over light fixture with 10 mm (3/8 inch) flexible

metal conduit at least 1219 mm (48 inches) but not exceeding 1828 mm (72 inches) in length.

(c) Interior lighting shall be industrial fluorescent in building support and production support areas; commercial fluorescent in administrative, special support and corridors; and pulse-start metal halide fixtures in the aircraft dock. Provide switching other than panelboards for all areas. Recessed lay-in type fluorescent light fixtures shall be provided in all ceilings with suspended metal grid. Lighting for general office areas, classrooms, corridors, conference rooms, and lobbies shall be provided by 609 mm x 1219 mm (24″ x 48″) recessed fluorescent fixtures. 609 mm x 609 mm (24″ x 24″) fluorescent fixtures are not permitted.

(d) Lay-in fluorescent light fixtures shall be securely fastened to ceiling framing members by mechanical means (4 clips per fixture). All recessed light fixtures or other electrical devices shall be supported independently of lay-in ceiling tile by means of bar hangers or other structural means. Surface mounted fixtures shall be securely fastened to ceiling supporting structure. No toggle bolts in gypsum board or plaster shall be permitted.

(e) Lighting system shall incorporate the latest techniques of energy savings applied to lighting systems. For energy efficient interior lighting schemes, lighting systems shall be designed to allow reduction of lighting levels by appropriately banking lighting circuits or providing separate switching of inner and outer lamps in 3 or 4 tube fluorescent fixtures. Consideration should also be given for any task lighting that could possibly reduce the overhead lighting requirements.

(f) General illumination levels shall not exceed the intensities shown in Military Handbook 1190 dated 1 September 87. Office and console areas shall have a comfort probability (VCP) of greater than 70.

(g) All fixed lighting shall be installed using 277 volts.

(h) Lighting requirements are maintained performance requirements. The contractor shall utilize software to estimate maintained lighting levels that meet the criteria. The software shall also report initial lighting levels. The initial lighting levels will be tested during the acceptance test period. Additional lighting shall be provided should the initial values be less than those calculated initial values.

(i) The following are the limits to be used for lighting level calculations:

	Metal-Halide (MH)	Pulse-Start MH	High Pressure Sodium	Fluor-escent
Total light loss factor(max)	.65	.70	.70	.80
Hangar floor reflectance(max)	.10	.10	.10	.10
Other area floor Reflectances (max)	.20	.20	.20	.20

7.5.14.2 Interior Lighting

(a) Fluorescent fixtures shall use T-8 lamps, electronic ballast with high power factor (greater than .9) and low harmonic distortion (less than 10%). Emergency lighting in areas with recessed fluorescent lighting shall be connected to the emergency power system. In administrative areas, parabolic fixtures shall be used to the maximum extent possible.

Acrylic Prismatic lenses shall be a minimum 4mm thick. Polystyrene lenses shall not be permitted.

(b) Exit Lights - All exit lights shall be of the diffused L.E.D. type with Red Lettering. Exit lighting shall include battery backup and be unswitched.

7.5.14.3 Aircraft Dock Lighting

(a) General horizontal lighting level shall be a maintained minimum of 807 Lux at 1 meter (3.2 ft) above the floor.

(b) Maximum to minimum lighting levels within the space shall not exceed a 2:1 ratio. Submit design calculations to verify the maximum to minimum ratio.

(c) Vertical illuminance on the fuselage of the aircraft shall be a maintained minimum of 538 Lux.

*8

(d) Equipment: Sufficient portable lighting equipment shall be furnished to add 538 Lux to 25% of the underside of the wings and fuselage at any time. Note that this equipment must be rated for Class I, Division 1, Group D hazardous locations. Also provide sufficient lighting equipment on ~~each teleplatform and~~ tailstand to add 300 lux to the vertical and horizontal surfaces being worked on from that platform or tailstand.

(e) The preferred method for fixture lamp replacement is from outside of the hazardous area.

(f) Provide lighting in all equipment and fixture access spaces.

(g) Provide clear plastic, mulit-layered, tear-off covers over the lenses of the aircraft dock, portable, and paint booth lights to facilitate removing paint from lenses.

7.5.14.4 Emergency Lighting

(a) Emergency lighting shall be provided in accordance with NFPA 101 and ETL 99-4. Individual unit equipment for emergency illumination shall be circuited to comply with NFPA 70, Article 700-12(e).

(b) Emergency egress lighting shall be battery-powered type with sealed, maintenance-free, rechargeable batteries; dual rate charger and a test switch.

(c) At least a portion of the light fixtures in each room shall be served by the emergency generator to provide emergency egress from the space.

7.5.14.5 Exterior Lighting

(a) Provide photocell controlled exterior lighting, consisting of high-pressure sodium lamp type fixtures. Light fixtures shall have electronic, high efficiency ballasts and energy saving lamps.

(b) Sidewalk lighting shall be accomplished using wall-mounted metal-halide luminaries.

(c) Roadway lighting poles shall be 9.2 meter (30 ft) aluminum with 1.5-meter (5 ft) davit arm for all roadway lights. All power and light poles, steel support structures, and their foundations shall be rated for a 44.7 meters/second (100 mph) wind load.

(d) Apron Lighting: Provide a sufficient number of light fixtures, mounted a minimum of 24 meters (80 ft) above the hangar floor, mounted across the east face of the hangar, to maintain the apron at 20 lux, from the face of the hangar to 35 meters (115 ft) east of the hangar for 1-1/2 times the full width of the hangar. The fixture aiming point shall not be less than 45 degrees below horizontal.

7.5.15 Emergency Generator

*8

(a) Provide emergency generator power for egress lighting, fire alarm system, hangar doors and all eight future teleplatforms. A minimum of 10% of the fixed aircraft dock lighting shall be served by the generator. These fixtures shall include the quartz restrike feature with 300 watt minimum quartz lamps.

(b) If a lead-acid battery is required, specify the lead-calcium type, rather than lead-antimony, to provide increased service life, decreased hydrogen gas production (venting may not be required), and decreased routine maintenance (water make up).

(c) Provide manual bypass switching around automatic transfer switches.

(d) Provide suitable enclosure for new fixed emergency generator installations. Color shall match existing architectural theme in surrounding area.

(e) Electrical transfer switch and control installations shall be located in the electrical room.

(f) The on-site, generator fuel supply shall be sufficient to operate the generator at full load, for a minimum of 72 hours.

7.5.16 Structured Cabling Systems

(a) Voice and data communications systems shall be designed in accordance with TIA/EIA-568-A, TIA/EIA-569, TIA/EIA 606, TIA/EIA 607, MIL-HDBK-1012/3 and NFPA 70.

(b) Voice and Data Communications service: This contract shall provide four dedicated, empty 103-mm (4 inch) conduits, from the building communications room to Manhole 18L, located west of Building 43. Provide 4-cell innerduct in one of the new conduits.

*(6)

(c) Provide a wall-mounted, 19-mm (3/4 inch) plywood backboard for copper cable terminations. Extend Category 6 cables from the backboard to all workstations. Contractor shall terminate all cables provided.

(d) Communications rooms shall be a minimum of 2134 x 3048 x 2438 mm high (7′ x 10′ x 8′ high) with a 1216 x 2432 x 19 mm thick (8′ x 8′ x 3/4″ thick) plywood backboard securely attached to one wall. As a minimum provide two each 110-Vac, 20A, duplex outlets with 152-mm (4 inch) separation in closets with surge protection. Telephone backboards shall be installed 600 mm (24 inches) off the ground above the service entrance conduits. The backboard shall be mounted horizontally with 1219 mm (48″) side parallel to the ground.

(e) Administrative areas will need general outlets and power for personal computers. All areas will require telephone outlets. Each workstation will required at least one triple connection combination, one Voice/two

Data outlet. Additional outlets will be required as directed by the using activity. Category 6 wiring shall not exceed 90 meters in accordance with EIA/TIA standards.

(f) Provisions for voice and data communication systems shall consist of providing a complete wiring and pathway system, including all conduits, connectors, cross connects, terminations, racks, grounding system, and all other items necessary for a complete and usable system. Building shall be prewired with Category 6, UTP (4 pair) wire in EMT conduit to each workstation or outlet. Minimum size conduit shall be 21 mm (3/4 inch) for voice circuits and 27 mm (1 inch) for data. Pre-wire all locations complete from outlet back to the communication room.

7.5.17 Public Address Systems

(a) Provide a standalone public address system including Break/Clock/Shift bells to cover the new facility.

(b) Provide a Public Address Master Station in Office area.

(c) Public address system shall include direct communications between the hangar bay Dock Area and the adjacent control booth. Provide hands free talk back capabilities for this location.

(d) Provide a uniform 85 dB in the hangar.

7.5.18 Lightning Protection

(a) Provide an EASE protection system per the included base specification Section 16671.

7.5.19 Hazardous Locations

(a) Design drawings shall clearly show all hazardous locations, and identify each by Class, Division, Group, and Operating Temperature. This contractor shall evaluate this facility to determine the appropriate area classification for all spaces not already classified in this document.

(b) All hazardous areas shall be documented in accordance with NFPA 70, Article 516 and with NFPA 33.

(c) The dock area shall be a Class I, Division 1, Group D hazardous area. All electrical wiring and equipment installed in dock area shall be UL listed and approved for use in Class I, Division 1, Group D areas.

(d) Dock area electrical receptacles shall include:

- 20-ampere, 120-volt, single-phase outlets on 6 m (20 foot) centers on non-plenum walls, each with a dedicated circuit breaker.

- 100-ampere, 208- volt, 3-phase, 4-wire, plus ground outlets on 9 m (30 foot) centers on non-plenum walls, each with a dedicated circuit breaker.

- Three each 100-ampere, 480-volt, 3-phase, 4-wire plus ground outlets, equally spaced on each side of the hangar (total six per hangar), each with a dedicated circuit breaker.

- Two each, 200 ampere, 480 volt, three-phase, four-wire, plus ground outlets, each with a dedicated circuit breaker, one located on each side of the hangar, midway between the arecraft's nose landing gear and the main landing gear, for connection of GFGI hydraulic units. Coordinate the outlet pin configuration with the government.

(e) All three-phase outlets shall be served through a contactor/disconnect. The receptacles themselves shall include control wiring pins to disconnect power before the main contacts part.

*8
(f) Deleted~~Each teleplatform and tailstand shall include two each, 20-ampere, 120-volt, single-phase outlets with dedicated circuit breakers~~.

(g) A paint booth shall be provided adjacent to the dock area. The paint booth shall be NFPA 70, Class I, Division 1, Group D rated and shall include the required exhaust and makeup air ventilation systems.

7.5.20 Special Systems

7.5.20.1 Teleplatforms

*8
(a) Provide all power and control requirements for ~~teleplatforms and~~ tailstands located in the Hangar Bay dock area. Refer to paragraph 6.2.2 for teleplatform requirements. Provide spare circuit breakers to serve ~~additional~~ all future teleplatforms as required for total coverage of the C-5 aircraft.

*8
(b) Deleted~~Install "Snap Track" (Not Festoon) Cable Systems to the Teleplatforms~~.

7.5.20.2 400-Hz Source (Equipment Item)

(a) Provide a 90 kVA, solid state frequency converter for 60 to 400 hertz conversion. Locate the unit in the electrical room.

(b) Provide a suitable 208Y/120 volt, 3-phase, 4-wire plus ground outlet on the wall nearest the aircraft's nose wheel to provide 400 hertz power to the aircraft. Provide a means, at the aircraft serving receptacle, to start and stop the converter.

(c) Provide an adequately sized cable both capacity and length, with appropriate connectors for the outlet and aircraft ends. Furnish a wall-mounted cable rack for storage of the cable when it is not in use.

7.5.20.3 Alarm Annunciation Devices:

Provide unique colored and sounding alarm annunciating devices for each different alarm system provided in the facility such as fire alarm, hangar door moving, off spec breathing air, off spec exhaust/recirculating air, etc. See table below for list of alarms.

Paint Hangar Alarms

	System			Indication	
	SA Fans	EA Fans	CA to Paint Guns	Visual (Note 3)	Audible
Fire Alarm	OFF	OFF	-	Red	X
Hangar Door	Note 1	Note 1	OFF	Yellow	X

Operation					
Painting in Progress				Note 5	
BA System					
High CO / Low O2	ON	ON	OFF	Blue	X
Low Pressure	ON	ON	OFF	Blue	X
Hangar Bay					
High LEL/PEL	ON	ON	OFF	Green Note 4	X
Low Airflow	ON	ON	OFF	Green Note 4	X
High space press.	OFF	OFF	OFF	Note 2	
High exhaust filter dP	OFF	OFF	OFF	Note 2	

Notes:

1. SA and EF fans shall maintain current speed and mode of operation.
2. Indication at the hangar control panel.
3. Visual indication shall be visible to all workers in the hangar bay. Coordinate light colors with Robins AFB.
4. Indication at hangar control panel and in the aircraft hangar bay.
5. Flashing Yellow outside each entry door into the aircraft dock.

7.5.21 Energy Conservation

(a) The electrical design shall coordinate with mechanical and provide connections for all energy conservation and/or monitoring systems outlined in Section 6.0, Mechanical Technical Design Criteria.

(b) In addition to requirements in Section 6.0, all equipment shall have control panels at the site but shall also send a signal via radio transmission to the base monitoring location. Contractor shall be responsible for coordinating the transmitting equipment with the existing base receiving equipment and for programming modifications required to monitor and control the mechanical systems from the existing location.

7.5.22 Outages

a) Outages to tie into existing utilities, and all construction work must be accomplished in such a manner as to minimize the impact to existing base operations. Any utilities or equipment that need to be relocated to construct the facility shall be accomplished in such a manner as to minimize the impact on the existing base operations.

b) Utility Outages and Road Closings: Unless otherwise specified, all utility outages shall be accomplished between 1800 Friday and 0600 Monday. All outages shall be coordinated in writing through the Contracting Officer with written approval from 778 CES/CECM, Construction Management Section.

8.0 CATHODIC PROTECTION

(a) Engineering and design of Cathodic Protection and coatings are required as indicated in accordance with ETL 1110-3-474, included as part of this RFP document.

(b) General soil conditions at Robins AFB are very conducive to corrosion of underground metal structures. The soil varies from sandy silt to sandy clay with areas of stratification of the various types. Soil resistivity varies from a high of 26,100 ohm-cm to a low of 529 ohm-cm. There is no soil resistivity data available at the base. Designer shall take readings at the locations of structures and paths of utilities being cathodically protected. Design analysis shall contain a map showing the sites of such readings, type of instrument used, and a table containing location designation and soil resistivity. Cathodic protection design shall be a complete design and not a performance specification. Guidance for the installation and/or use of corrosion mitigation equipment and procedures is provided in AFM 88-45, Civil Engineering Corrosion Control - Cathodic Protection. All metals installed underground or in contact with the ground at Robins AFB shall have cathodic protection for control of corrosion.

(c) Cathodic protection and protective coatings shall be provided for but not necessarily limited to the following buried or submerged ferrous metallic structures regardless of soil or water resistivity:

- Natural gas and propane piping.
- Liquid fuel piping.
- Underground storage tanks.
- Fire protection piping.
- Ductile or cast iron pressurized piping under floor (slab on grade) in soil.
- Underground heat distribution and chilled water piping in ferrous metallic conduit in soils with resistivity of 30,000 ohm-cm or less.
- Other structures with hazardous products.
- Steel casing for underground hydraulic elevator jack.
- Oxygen piping.

(d) Cathodic protection for buried metallic structures shall be designed in accordance with ETL 91-6.

(e) Protective Coatings: Coating specifications for above and below ground high-value metallic structures shall be prepared in accordance with the guide specifications shown in AFM 85-3, Paints and Protective Coatings, (revised 1982). Underground piping systems shall conform to either FS-L-C-530, Type II (except tape and primer conform to AWWAC203) for epoxy or for continuously extruded polyethylene, FS-L-C-530, Type I (Federal Specifications). On all metallic structures where the surface is blasted to white or near white finish, no blasted surface shall be left unprimed beyond the normal workday. Coatings specified for underground or submerged use shall be those specifically designed for those types of environmental conditions. Under no circumstances shall thin plastic film tapes, such as electrical tape, be used to coat underground structures or wiring. Reference NACE Standard RP-01-69 for coating information.

(f) All ferrous underground piping shall be cathodically protected using a sacrificial anode system. The system shall be designed for a minimum life of 20 years.

(g) All piping that has a cathodic protection system shall have a cathodic protection coating with at least 90% coverage efficiency.

(h) The coating system shall consist of one of the following coatings:

- Coal Tar Coating: This shall consist of a coal tar primer, an outer wrap of non woven, thick, glass fiber mat that has been impregnated with coal tar enamel (thickness not less than 0.76 mm (30 mils)), and a polyethylene Kraft paper wrap (thickness not less than 0.10 mm (4 mils)). This shall be installed on the metallic pipe in accordance to the procedure called out in ANSI/AWWA C203.

- Epoxy Coating System: Coating system shall conform to FS L-C-530, Part II. Fittings, valves, and joints shall be factory-coated with materials identical to those used on the pipe, or may be field-coated with a 2-part epoxy system recommended by the manufacturer of the pipe coating system. Field protection may also be provided for joints and fittings with a tar tape hot applied over a compatible primer.

- Thermoplastic Resin Coating System: Coating system shall conform to FS L-C-530, Part (3). Exterior of piping shall be cleaned to a commercial grade blast cleaning finish in accordance with SSPC CP 6. Adhesive compound shall be applied to pipe. Immediately after adhesion is applied, a seamless tube of polyethylene shall be extruded over the adhesive to produce a bonded seamless coating. Normal thickness of pipe coating system shall be 0.25 mm (10 mils) (plus or minus 10 percent) of adhesive and 40 mils (plus or minus 10 percent) of polyethylene. Joint coating and field repair material shall be applied as recommended by coating manufacturer and shall be one of the following:

  - Heat shrinkable polyethylene sleeves.
  - Polyvinyl chloride pressure-sensitive adhesive tape.
  - High-density/bituminous rubber compound tape.

(i) Coating system shall be inspected for holes, void, cracks, and other damage during installation. Testing shall be performed using a holiday tester set to the appropriate voltage as recommended by the coating manufacturer.

(j) All pre-design surveys, cathodic protection designs, and acceptance surveys and testing shall be performed by a person that is accredited or certified as a "Corrosion Specialist" by the National Association of Corrosion Engineers (NACE) as a NACE Accredited Corrosion Specialist or a NACE certified CP Specialist or be a registered professional engineer who has certification or licensing that includes education and experience in corrosion control of buried or submerged metallic piping and tank systems. Any certifications shall verify that designer has had experience in cathodic protection design, installation and testing as per ETL 91-6All.

9.0 FIRE PROTECTION

(a) All fire detection/fire protection and fire alarm system designs shall be performed by a qualified Fire Protection Engineer in accordance with ETL 02-15 and MIL HDBK 1008-C. As required by ETL 12-15, use standard design details available from AFCESA.

(b) The building shall be protected with a fire detection/fire protection and alarm system installed in accordance with NFPA 72. Fire detection and alarm systems shall be designed in accordance with EGL 92-2, AFR 127-100,

MIL-HDBK-1008, ETL 02-15, NFPA 72, NFPA 33, NFPA 20 and other applicable NFPA Standards and Codes.

(c) Provide a complete 4-wire supervised system. The complete fire alarm system shall meet requirements of NFPA 72, Table 3-9.1, Style 6 and Table 3-10.1, Style Z. The fire alarm control panel shall be addressable and have a class "A" supervised fire alarm circuit that provides a trouble signal and continues to operate as an alarm circuit after 1 fault has occurred in the wiring. Provide a remote annunciator. All fire alarm controls shall be located in a single fire alarm control panel.

Provice a minimum of three separate initiation circuits from the fire alarm control panel (FACP). Each initiation circuit shall have a separatae isolator module for short circuit isolation. The circuits shall the hangar dock, the northwest support area, and the southwest support area.

(d) All devices shall be addressable and comply with NFPA requirements and EGL 92-2, Paragraph 15-76.

(e) In the aircraft dock area, addressable modules shall be utilized on all devices that are not readily available rated for the hazardous location. Locate the addressable module within 300 mm of the device. Intrinsically safe wiring shall not be utilized on the fire alarm system.

(f) Annunciation circuits shall be connected directly to the fire alarm control panel (FACP) notification terminals. The audio/visual devices shall not be connected to the Style 6 initiation loop.

(g) Notification of evacuation of personnel shall be by both audible and visual alarms per EGL 92-2. All rooms except private offices shall have at least one visual fire alarm. The system shall have tamper switches on all valves that would disable the sprinkler system, and shall transmit all system trouble, supervisory trouble and alarm signals to the Base Fire Department. Upon the detection of flow of water in sprinkler lines, a water gong shall sound and the fire alarm panel shall signal an alarm.

(h) All alarm, supervisory signals and trouble signals shall be transmitted by a transceiver compatible with Monaco Radio Fire Alarm System "D700," currently in use on Robins AFB. Contractor shall provide a transceiver compatible with Monaco BT-2-8, 16 Zone set to frequency 165.1375 MHz. All equipment necessary to interface with the transceiver and transmit fire alarms, supervisory signals and trouble signals to the Base Fire Department, including cable, brackets, antennas, etc., shall be 100% compatible with the existing Monaco system. Integral fire alarm control panel and radio transmitter shall not be provided.

(i) The control panel shall have a dry set of contacts for each trouble and fire alarm and shall be 100% compatible with the existing Monaco system. Written certifications from manufacturers other than Monaco shall be required stating they meet this criteria. Specify spare zone boards, drawings and schematics of fire alarm panels, recommended spare parts list, and special tools/test equipment are required.

(j) The fire alarm panel, transmitter or transceiver, associated antenna, lightning arrester, and cable shall be located in equipment rooms and easily accessible by the Base Fire Department. A remote graphic annunciator shall be installed at the facility entrance as directed by the Base Fire Department.

(k) Include smoke detectors in air handling units to comply with NFPA 90A and all air handling units that deliver more than 944 L/s (2,000 cfm). Interlock all required HVAC fans and equipment with the fire alarm system panel. All fans (supply and exhaust) within a zone shall de-energize when notified by the fire alarm panel that an alarm condition exists in that zone.

(l) Manual pull stations for evacuation of personnel and transmission of fire alarms to the Base Fire Department will be located at each exit and spaced to meet NFPA requirements.

(m) All fire alarm system acceptance tests shall be performed in the presence of the Base Fire Department, to demonstrate operation of all fire alarm devices.

*(6)
(n) Deleted.

(o) The paint bay shall be classified in accordance with NFPA 70 as a Class I, Division 1, Group D hazardous area. The paint booth shall be classified as a Class I, Division 1 Group D hazardous area in accordance with NFPA 70.

9.1 Fire Suppression System

Automatic wet pipe sprinkler protection shall be provided for this facility. The requirements indicated below shall be incorporated into the design-build process.

9.1.1 Qualifications of Fire Protection Engineer

The design of the fire protection features shall be by a qualified fire protection engineer meeting one of the following conditions: a.) An engineer with a Bachelor of Science or Masters of Science Degree in fire protection engineering from an accredited university engineering program, plus a minimum of 5 years' work experience in fire protection engineering. b.) A registered professional engineer who has passed the National Council of Examiners for Engineering and Surveys (NCEE) fire protection engineering written examination. c.) A registered P.E. in a related engineering discipline with a minimum of 5 years' experience dedicated to fire protection engineering.

9.1.2 Sprinkler System

(a) The facility shall be fully protected with automatic wet pipe sprinkler systems. All floors and all areas of the facility shall be protected. The sprinkler system designs shall be in accordance with MIL-HDBK-1008C, ETL 02-15, NFPA 13, Factory Mutual (FM), UL, UBC, and UFGS Specification Section 13930 - WET PIPE SPRINKLER SYSTEM. The sprinkler hazard classifications shall be in accordance with MIL-HDBK-1008C, ETL 02-15, and NFPA 13. Design densities, design areas and exterior hose streams shall be in accordance with ETL 02-15 and MIL-HDBK-1008C. The paint bay shall be protected with a wet pipe sprinkler system as required by ETL 02-15 for hangars used exclusively for unfueled aircraft. The sprinkler systems shall be designed and all piping sized with computer generated hydraulic calculations in the HASS format (by HRS Systems, Atlanta, GA). The exterior hose stream demand shall be included in the hydraulic calculations. A complete sprinkler system, including sprinklers, branch lines, floor mains and risers, shall be shown on the drawings.

(b) The Contractor shall edit UFGS Specification Section 13930 - WET PIPE SPRINKLER SYSTEM, for this project. This shall be submitted for review with the preliminary and final design submittals. These specifications

shall be followed for the design and installation of the sprinkler systems.

(c) The Contractor shall submit material data, hydraulic calculations, and shop drawings as required by Specification Section 13930 to the Contracting Officer for review and approval.

9.1.3 Exterior Hose Stream

Exterior hose stream demand shall be in accordance with ETL 02-15.

9.1.4 Backflow Preventer

A double check valve assembly backflow preventer shall be provided on the fire water main serving the building. This shall be located within the building. An exterior wall hydrant with OS&Y valve shall be provided to allow testing of backflow preventer at design flow as required by NFPA 13. Ensure wall hydrant for backflow preventer is identified differently than the sprinkler system FD connection.

9.1.5 Fire Department Connection

A bronze, Siamese fire department connection with check valve shall be provided as required, located to be directly accessible to the fire department. The fire department connection shall be equipped with an NFPA standard thread for 65 mm (2 1/2-inch) hose connection.

9.1.6 Fire Pumps

Fire pumps shall be provided (if required) in accordance with ETL 02-15 and NFPA 20. Pumps shall be electric drive. Pump and installation shall be in accordance with UFGS Specification SECTION 13920.

9.1.7 System Components and Hardware

(a) Materials for the sprinkler system and fire pump system shall be in accordance with UFGS Specification SECTIONS 13920 and 13930, NFPA 13, and ETL 02-15. Sprinkler system piping shall be black steel and shall be minimum Schedule 40 for sizes 50 mm (2 inch) and less and minimum Schedule 10 for sizes greater than 50 mm (2 inch). Limit flow velocity in interior fire water piping to 6 meters per second (20 fps). Thrust blocks for underground piping shall be designed to restrain piping pressure of 2068 kPa (300 psig). Valves in the fire water system shall be designed for a minimum 1723 kPa (250 psig) working pressure.

(b) Provide a post indicator valve for the fire protection water line entering the building. Contractor shall provide a monitored Outside Stem and Yoke (OS&Y) valve on the fire protection water line serving each fire protection zone. The OS&Y valve shall be located near the branch from the fire water main. Water flow detectors shall be installed in the supply piping to each fire protection zone. The valve position signal and water flow alarms shall be interconnected with the fire alarm panel. All valves that could disable the sprinkler system shall be equipped with tamper switches, with tamper alarms transmitted to the fire alarm panel and to the fire alarm radio transceiver as a supervisory signal.

9.1.8 Protection of Piping Against Earthquake Damage

Sprinkler and fire pump piping systems shall be protected against damage from earthquakes. Seismic protection shall include flexible and rigid couplings,

sway bracing, seismic separation assemblies where piping crosses building seismic separation joints, and other features as required by NFPA 13 for protection of piping against damage from earthquakes.

9.1.9 Fire Water Supply

Refer to Civil Design Criteria for design requirements and fire water flow data.

9.1.10 Fire Extinguishers

Provide fire extinguishers as required by applicable codes. Provide recessed cabinets in administrative areas.

9.1.11 Fire Hydrants

Refer to Civil Design Criteria for design requirements. Wall hydrants are not acceptable.

10.0 TESTING AND VERIFICATION

10.1 Summary

(a) Testing and verification is a quality assurance process of the installation of the systems in a facility. It is a process for achieving, verifying, and documenting the performance of each system to meet the operational needs of the facility. This process shall ensure the quality of installation and functionality of the facility, and shall include preparation of manuals and training of operation and maintenance personnel.

(b) Testing and verification shall be a continual process during the design and installation of the facility to ensure that the contract requirements, and the design build approach to meet those requirements, are realized in the final product. Communication between the design team and the build team shall include design assumptions, calculations, conditions (both environmental and system's output), and philosophies and assumptions about system and equipment controls.

(c) All testing and verification work shall be coordinated with and conducted in the presence of the Contracting Officer’s Representative. Work shall be conducted in accordance with UFGS Guide Specifications 15990 – TESTING, ADJUSTING, AND BALANCING OF HVAC SYSTEMS, and 15995 – COMMISSIONING OF HVAC SYSTEMS, in addition to requirements of this section.

10.2 Submittals

Submit the following:

(a) Quality-Assurance Submittals: Within 30 days from the Contractor's Notice to Proceed, submit two copies of evidence that the testing, adjusting, and balancing Agent and this Project's testing, adjusting, and balancing team members meet the qualifications specified in the "Quality Assurance" Article below.

(b) Contract Documents Examination Report: 60 days prior to the start of TAB activities, submit two copies of the Contract Documents review report.

(c) Strategies and Procedures Plan: Contractor shall submit two copies of the testing and verification strategies and step-by-step procedures for TAB work as specified in the "Preparation" Article below. Include a complete set of report forms intended for use on this Project.

(d) Preliminary Testing, Adjusting, and Balancing Reports: Submit photo copies of the original data sheets attached to the applicable daily reports. Submit all data sheets each day that the testing and balancing contractor is on site.

(e) Certified Testing, Adjusting, and Balancing Reports: Submit two copies of reports prepared, as specified in this Section, on approved forms certified by the testing, adjusting, and balancing Agent.

(f) Sample Report Forms: Submit two sets of sample testing, adjusting, and balancing report forms.

(g) Infrared Scan Report Forms: Submit two sets of sample infrared scan report forms.

10.3 Quality Assurance

(a) Agent Qualifications: Engage a testing, adjusting, and balancing agent certified by either AABC or NEBB.

(b) Testing, Adjusting, and Balancing Conference: Meet with the Owner's and the Engineer's representatives on approval of the testing, adjusting, and balancing strategies and procedures plan to develop a mutual understanding of the details. Ensure the participation of testing, adjusting, and balancing team members, equipment manufacturers' authorized service representatives, HVAC controls Installer, and other support personnel. Provide 7 days' advance notice of scheduled meeting time and location.

(1) Agenda Items: Include at least the following:

- Submittal distribution requirements.
- Contract Documents examination report.
- Testing, adjusting, and balancing plan.
- Work schedule and Project site access requirements.
- Coordination and cooperation of trades and subcontractors.
- Coordination of documentation and communication flow.
- Testing, Adjusting, and Balancing Reports: Use standard forms from NEBB's "Procedural Standards for Testing, Adjusting, and Balancing of Environmental Systems."
- Porposed infrared scanning proceedures.
- Proposed infrared scanning equipment.
- Proposed infrared scanning report forms.

(c) Certification of Testing, Adjusting, and Balancing Reports:

(1) The testing and balancing contractor shall certify the testing, adjusting, and balancing field data reports. This certification includes the following: Review field data reports to validate accuracy of data and to prepare certified testing, adjusting, and balancing reports.

(2) Certify that the testing, adjusting, and balancing team complied with the approved testing, adjusting, and balancing plan and the procedures specified and referenced in this Specification.

(d) Instrumentation Type, Quantity, and Accuracy: As described in NEBB's "Procedural Standards for Testing, Adjusting, and Balancing of Environmental Systems," Section II, "Required Instrumentation for NEBB Certification."

10.4 Coordination

(a) Coordinate the efforts of factory-authorized service representatives for systems and equipment, controls installers, and other trade personnel to operate systems and equipment to support and assist testing, adjusting, and balancing activities.

(b) Notice: Provide 7 days' advance notice for each test. Include scheduled test dates and times.

(c) Perform testing, adjusting, and balancing after leakage and pressure tests on air and water distribution systems have been satisfactorily completed.

10.5 Examination

(a) Examine Contract Documents to become familiar with project requirements and to discover conditions in systems' designs that may preclude proper testing, adjusting, and balancing of systems and equipment.

(b) Verify that balancing devices, such as test ports, gauge cocks, thermometer wells, flow-control devices, balancing valves and fittings, and manual volume dampers, are required by the Contract Documents. Verify that quantities and locations of these balancing devices are accessible and appropriate for effective balancing and for efficient system and equipment operation.

(c) Examine approved submittal data of systems and equipment.

(d) Examine Engineer's design data, including system descriptions, statements of design assumptions for environmental conditions and systems' output, and statements of philosophies and assumptions about system and equipment controls.

(e) Examine equipment performance data, including fan and pump curves. Relate performance data to project conditions and requirements, including system effects that can create undesired or unpredicted conditions that cause reduced capacities in all or part of a system. Calculate system effect factors to reduce the performance ratings of HVAC equipment when installed under conditions different from those presented when the equipment was performance tested at the factory. To calculate system effects for air systems, use tables and charts found in AMCA 201, "Fans and Systems," Sections 7 through 10; or in SMACNA's "HVAC Systems--Duct Design," Sections 5 and 6. Compare this data with the design data and installed conditions.

(f) Examine systems for functional deficiencies that cannot be corrected by adjusting and balancing.

10.6 Preparation

(a) Prepare a testing, adjusting, and balancing plan that includes strategies and step-by-step procedures.

(b) Complete system readiness checks and prepare system readiness reports. Verify the following:

(1) Permanent electrical power wiring is complete.
(2) Hydronic systems are filled, clean, and free of air.
(3) Automatic temperature-control systems are operational.
(4) Equipment and duct access doors are securely closed.
(5) Balance, smoke, and fire dampers are open.
(6) Isolating and balancing valves are open and control valves are operational.
(7) Ceilings are installed in critical areas where air-pattern adjustments are required and access to balancing devices is provided.
(8) Windows and doors can be closed so design conditions for system operations can be met.

10.7 Testing, Adjusting, And Balancing

(a) General: Testing, adjusting, and balancing shall be performed as required in this section and in accordance with UFGS Section 15990 and 15995. Testing, adjusting and balancing shall include the following:

(1) Balancing airflow and water flow within distribution systems, including submains, branches, and terminals, to indicated quantities according to specified tolerances.
(2) Adjusting total systems to provide indicated quantities.
(3) Measuring electrical performance of equipment.
(4) Setting quantitative performance of equipment.
(5) Verifying that automatic control devices are functioning properly.
(6) Measuring sound and vibration.
(7) Provide thermal scan of electrical primary switchgear, main distribution panels, and motor control centers.
(8) Reporting results of the activities and procedures specified in this Section.
(9) Setting the circuit breaket trip units per the coordination study.
(10) Furnishing the results of the infrared scans.

(b) Vibration Testing: All rotating equipment with motors 15 kW (20 hp) and larger shall be vibration tested, and aligned to a maximum of 2.5 mm/sec (0.10 in /sec) velocity.

(c) Paint Bay Airflow:

(1) Contractor shall develop and submit a detailed test and balance procedure for the paint hangar airflow prior to commencing work.

(2) Test, adjust, and balance the paint bay airflow to provide a constant velocity across the aircraft zone (defined as the cross section of the aircraft plus 3 meters (9.8 ft)). Air velocity measurements shall be taken in a plane perpendicular to airflow, at 8 m (26 ft) intervals along the length of the hangar. Velocity measurements shall be taken in a grid pattern across the cross section of the bay, starting at 2 m (6.5 ft) from the walls and 1.5 m (5 ft) from the floor and ceiling, with measurements taken 3 m (9.8 ft) on center. Velocities shall be balanced to be 22.8 m/min (75 fpm) maximum, 15.3 m/min (50 fpm) minimum, 18.3 m/min (60 fpm) average in the aircraft zone, with a minimum of 15.3 m/min (50 fpm) at any point outside the aircraft zone (actual velocities to be validated by Contractor). Velocities shall be balanced with filters in a clean and simulated loaded (dirty) condition. Provide a smoke test by walking a narrow plume of smoke through the hangar at 2 m (6.5 ft), 6 m (20 ft) and 12 m (40 ft) heights. Total airflow shall be measured in the supply and

return air streams, and shall be balanced to –0 to +5% of design value.

(3) In addition to demonstrating airflow and velocities, provide space static pressure and temperature measurements to demonstrate that the space maintains the desired static pressure and temperature during all modes of operation.

(d) Paint Facility Electrical System:

(1) Test and adjust each circuit breaker's adjustable trip elements to the settings determined by the coordination study. Confirm the proper operation of these circuit breakers.

(2) Perform a thermal scan of all medium voltage terminations installed by this project. Record all fuse data (manufacturer, style, voltage rating, ampere rating, model number and it's location) encountered during these procedures.

(3) Perform a thermal scan of all secondary cable and bus terminations installed by this project. Include all low voltage cable terminations rated 100 amperes or more. Include both ends of all medium voltage cable terminations.

(4) Repair any deficiencies uncovered by the thermal scan during an outage scheduled through the Contracting Officer. Rescan those repaired elements after the system has been re-energized for a minimum of 72 hours.

10.8 System Testing And Verification

(a) The result of testing and verification shall be fully functional systems that can be properly operated and maintained throughout the useful life of the facility. Testing and verification shall address the building as a total system, including: electrical, mechanical, process, plumbing, doors, safety systems, Aerospace NESHAP's, OSHA, etc. It shall prove a compliant, integrated facility and process system.

(b) The design-build team shall provide detailed testing and verification of all building systems including:
*8

(1) Lighting performance
(2) Non-process HVAC performance
(3) Process heating, ventilating and cooling performance (with and without the aircraft in the hangar)
(4) Noise performance
(5) Vibration performance
(6) Process System (paint, alodine, acid etch, wash and rinse, breathing air, process air, etc.) performance
(7) Non-process controls
(8) Process controls, including all alarms, warnings, and interlocks
(9) Boiler/chiller capacity (if not factory tested)
(10) Alarm/notification systems (fire, PA, doors, breathing air, filters, etc.)
(11) Deleted~~Teleplatforms~~
(12) Cranes

(c) The contractor shall provide the initial load of materials (process chemicals, wash soap, etc.) required for preliminary and final testing.

10.8.1 Preliminary Test and Verification

Contractor shall conduct preliminary tests during installation of system components. Manufacturer’s representatives shall be present during the preliminary tests, and tests shall be conducted in the presence of the Contracting Officer’s Representative (COR). Any deficiency identified during testing shall be corrected by the Contractor and system retested prior to final testing and verification.

10.8.2 Final Test and Verification

After all preliminary tests have been performed and accepted, Contractor shall conduct the final test and verification. Manufacturer’s representatives shall be present for the final test and verification. This test shall be performed in the presence of the Contracting Officer’s Representative and the User. Test shall demonstrate (w/o an aircraft) all aspects of the facility operation from receipt of materials through final dock cleanup. The system testing and verification shall not be considered complete until at least one complete walkthrough has been accomplished without significant problems. Any system with a false alarm or failure shall be re-tested until satisfactory results are accomplished.

10.9 Operator Training

Operator training shall be provide as described in SECTION 01012 for all building and process systems.

10.10 Final Report

(a) General: Typewritten, or computer printout in letter-quality font, on standard bond paper, in 3-ring binder, tabulated and divided into sections by tested and balanced systems.

(b) Include a certification sheet in front of binder signed and sealed by the certified testing and balancing engineer.
   (1) Include a list of the instruments used for procedures, along with proof of calibration.

(c) Final Report Contents: In addition to the certified field report data, include the following:
   (1) Pump curves.
   (2) Fan curves.
   (3) Manufacturers' test data.
   (4) Electrical equipment thermal scan reports.
   (5) Equipment vibration test reports.
   (6) Field test reports prepared by system and equipment installers.
   (7) Other information relative to equipment performance, but does not include approved Shop Drawings and Product Data.

(d) General Report Data: In addition to the form titles and entries, include the following data in the final report, as applicable:
   (1) Title page.
   (2) Name and address of testing, adjusting, and balancing Agent.
   (3) Project name.
   (4) Project location.
   (5) Engineer's name and address.
   (6) Contractor's name and address.
   (7) Report date.
   (8) Signature of testing, adjusting, and balancing Agent who certifies the report.
   (9) Summary of contents, including the following:
      - Design versus final performance.

- Notable characteristics of systems.
- Description of system operation sequences if it varies from the Contract Documents.

(10) Nomenclature sheets for each item of equipment.

(11) Notes to explain why certain final data in the body of reports vary from design values.

(e) System Diagrams: Include schematic layouts of air and hydronic distribution systems, process flow diagrams, special plumbing system diagrams, and electrical diagrams. Present as single-line diagrams.

(f) Air-Handling Unit Test Reports: For air-handling units with coils, include the following:
- Unit Data.
- Motor Data.
- Test Data.

(g) Exhaust Fan Test Reports: For Paint bay exhaust fans, include the following:
- Unit Data.
- Motor Data.
- Test Data.

(h) Apparatus-Coil Test Reports: For apparatus coils, include the following:
- Coil Data.
- Test Data.

(i) Equipment Test Reports: For process equipment, include the following:
- Unit Data.
- Motor Data.
- Test Data.

(j) Electrical System Test Reports:

(1) Provide a table of recommended settings versus final settings for all circuit breaker adjustable trip elements.

(2) Document the temperature reading of all terminations scanned by phase (and neutral where applicable) noting the equipment label, compartment and location such that future thermal scan data can be easily compared to this initial data.

11.0 PERMITS

The Design-Build Contractor shall be responsible for assisting the COE in the preparation of the environmental and construction permit applications listed below. The permit forms are provided in Appendix O. The forms indicate the information that is required by the Design-Build Contractor. The Design-Build Contractor shall assist in the preparation of the listed permits, providing all required information and supporting documentation in a form ready for signature by the Owner and submittal to the applicable agency. Should the permitting agency require additional clarification or information during the permit review process, the Design-Build Contractor shall provide all necessary assistance to resolve the outstanding issue.

Permit Name/Type	Responsible Agency	Responsible Party For Application	Responsible Party Signature
Air Pollution Source Construction Permit	Georgia Environmental Protection Division (GA EPD)	Design-Build Contractor	EM
Title V Operating Permit Modification	Georgia Environmental Protection Division (GA EPD)	Design-Build Contractor	EM
Stormwater Construction Permit	Georgia Environmental Protection Division (GA EPD)	Design-Build Contractor	EM
Stormwater Pollution Prevention Plan	Georgia Environmental Protection Division (GA EPD)	Design-Build Contractor	EM
Sanitary Sewer Connection Permit	78 CES	Design-Build Contractor	EM
Water Connection	78 MDG/SGPB	Design-Build Contractor	EM
Crane Permit	Robins AFB	Design-Build Contractor	BCP/Base
Land Disturbing Activity Permit	Georgia Environmental Protection Division (GA EPD)	Design-Build Contractor	EM
Digging Permit	Robins AFB 78 CES	Design-Build Contractor	BCE
Demolition Permit	State of Georgia	Design-Build Contractor	EM

-------- END OF SECTION -------

SECTION 01312A

QUALITY CONTROL SYSTEM (QCS)
08/01

1.1 GENERAL

The Government will use the Resident Management System for Windows (RMS) to assist in its monitoring and administration of this contract. The Contractor shall use the Government-furnished Construction Contractor Module of RMS, referred to as QCS, to record, maintain, and submit various information throughout the contract period. This joint Government-Contractor use of RMS and QCS will facilitate electronic exchange of information and overall management of the contract. QCS provides the means for the Contractor to input, track, and electronically share information with the Government in the following areas:

Administration
Finances
Quality Control
Submittal Monitoring
Scheduling
Import/Export of Data

1.1.1 Correspondence and Electronic Communications

For ease and speed of communications, both Government and Contractor will, to the maximum extent feasible, exchange correspondence and other documents in electronic format. Correspondence, pay requests and other documents comprising the official contract record shall also be provided in paper format, with signatures and dates where necessary. Paper documents will govern, in the event of discrepancy with the electronic version.

1.1.2 Other Factors

Particular attention is directed to Contract Clause, "Schedules for Construction Contracts", Contract Clause, "Payments", Section 01320A, PROJECT SCHEDULE, Section 01330, SUBMITTAL PROCEDURES, and Section 01451A, CONTRACTOR QUALITY CONTROL, which have a direct relationship to the reporting to be accomplished through QCS. Also, there is no separate payment for establishing and maintaining the QCS database; all costs associated therewith shall be included in the contract pricing for the work.

1.2 QCS SOFTWARE

QCS is a Windows-based program that can be run on a stand-alone personal computer or on a network. The Government will make available the QCS software to the Contractor after award of the construction contract. Prior to the Pre-Construction Conference, the Contractor shall be responsible to download, install and use the latest version of the QCS software from the Government's RMS Internet Website. Upon specific justification and request by the Contractor, the Government can provide QCS on (3-1/2 inch) high-density diskettes or CD-ROM. Any program updates of QCS will be made available to the Contractor via the Government RMS Website as they become available.

1.3 SYSTEM REQUIREMENTS

The following listed hardware and software is the minimum system configuration that the Contractor shall have to run QCS:

Hardware

IBM-compatible PC with 200 MHz Pentium or higher processor

32+ MB RAM

4 GB hard drive disk space for sole use by the QCS system

3 1/2 inch high-density floppy drive

Compact disk (CD) Reader

Color monitor

Laser printer compatible with HP LaserJet III or better, with minimum 4 MB installed memory.

Connection to the Internet, minimum 28 BPS

Software

MS Windows 95 or newer version operating system (MS Windows NT 4.0 or newer is recommended)

Word Processing software compatible with MS Word 97 or newer

Internet browser

The Contractor's computer system shall be protected by virus protection software that is regularly upgraded with all issued manufacturer's updates throughout the life of the contract.

Electronic mail (E-mail) compatible with MS Outlook

1.4 RELATED INFORMATION

1.4.1 QCS User Guide

After contract award, the Contractor shall download instructions for the installation and use of QCS from the Government RMS Internet Website; the Contractor can obtain the current address from the Government. In case of justifiable difficulties, the Government will provide the Contractor with a CD-ROM containing these instructions.

1.4.2 Contractor Quality Control(CQC) Training

The use of QCS will be discussed with the Contractor's QC System Manager during the mandatory CQC Training class.

1.5 CONTRACT DATABASE

Prior to the pre-construction conference, the Government shall provide the Contractor with basic contract award data to use for QCS. The Government will provide data updates to the Contractor as needed, generally by files attached to E-mail. These updates will generally consist of submittal reviews, correspondence status, QA comments, and other administrative and QA data.

1.6 DATABASE MAINTENANCE

The Contractor shall establish, maintain, and update data for the contract in the QCS database throughout the duration of the contract. The Contractor shall establish and maintain the QCS database at the Contractor's site office. Data updates to the Government shall be submitted by E-mail with file attachments, e.g., daily reports, schedule updates, payment requests. If permitted by the Contracting Officer, a data diskette or CD-ROM may be used instead of E-mail (see Paragraph DATA SUBMISSION VIA COMPUTER DISKETTE OR CD-ROM). The QCS database typically shall include current data on the following items:

1.6.1 Administration

1.6.1.1 Contractor Information

The database shall contain the Contractor's name, address, telephone numbers, management staff, and other required items. Within 14 calendar days of receipt of QCS software from the Government, the Contractor shall deliver Contractor administrative data in electronic format via E-mail.

1.6.1.2 Subcontractor Information

The database shall contain the name, trade, address, phone numbers, and other required information for all subcontractors. A subcontractor must be listed separately for each trade to be performed. Each subcontractor/trade shall be assigned a unique Responsibility Code, provided in QCS. Within 14 calendar days of receipt of QCS software from the Government, the Contractor shall deliver subcontractor administrative data in electronic format via E-mail.

1.6.1.3 Correspondence

All Contractor correspondence to the Government shall be identified with a serial number. Correspondence initiated by the Contractor's site office shall be prefixed with "S". Letters initiated by the Contractor's home (main) office shall be prefixed with "H". Letters shall be numbered starting from 0001. (e.g., H-0001 or S-0001). The Government's letters to the Contractor will be prefixed with "C".

1.6.1.5 Equipment

The Contractor's QCS database shall contain a current list of equipment planned for use or being used on the jobsite, including the most recent and planned equipment inspection dates.

1.6.1.7 Management Reporting

QCS includes a number of reports that Contractor management can use to track the status of the project. The value of these reports is reflective of the quality of the data input, and is maintained in the various sections of QCS. Among these reports are: Progress Payment Request worksheet, QA/QC comments, Submittal Register Status, Three-Phase Inspection checklists.

1.6.2 Finances

1.6.2.1 Pay Activity Data

The QCS database shall include a list of pay activities that the Contractor shall develop in conjunction with the construction schedule. The sum of all pay activities shall be equal to the total contract amount, including modifications. Pay activities shall be grouped by Contract Line Item Number (CLIN), and the sum of the activities shall equal the amount of each CLIN. The total of all CLINs equals the Contract Amount.

1.6.2.2 Payment Requests

All progress payment requests shall be prepared using QCS. The Contractor shall complete the payment request worksheet and include it with the payment request. The work completed under the contract, measured as percent or as specific quantities, shall be updated at least monthly. After the update, the Contractor shall generate a payment request report using QCS. The Contractor shall submit the payment requests with supporting data by E-mail with file attachment(s). If permitted by the Contracting Officer, a data diskette may be used instead of E-mail. A signed paper copy of the approved payment request is also required, which shall govern in the event of discrepancy with the electronic version.

1.6.3 Quality Control (QC)

QCS provides a means to track implementation of the 3-phase QC Control System, prepare daily reports, identify and track deficiencies, document progress of work, and support other contractor QC requirements. The Contractor shall maintain this data on a daily basis. Entered data will automatically output to the QCS generated daily report. The Contractor shall provide the Government a Contractor Quality Control (CQC) Plan within the time required in Section 01451A, CONTRACTOR QUALITY CONTROL. Within seven calendar days of Government acceptance, the Contractor shall submit a data diskette or CD-ROM reflecting the information contained in the accepted CQC Plan: schedule, pay activities, features of work, submittal register, QC requirements, and equipment list.

1.6.3.1 Daily Contractor Quality Control (CQC) Reports.

QCS includes the means to produce the Daily CQC Report. The Contractor may use other formats to record basic QC data. However, the Daily CQC Report generated by QCS shall be the Contractor's official report. Data from any supplemental reports by the Contractor shall be summarized and consolidated onto the QCS-generated Daily CQC Report. Daily CQC Reports shall be submitted as required by Section 01451A, CONTRACTOR QUALITY CONTROL. Reports shall be submitted electronically to the Government using E-mail or diskette within 24 hours after the date covered by the report. Use of either mode of submittal shall be coordinated with the Government representative. The Contractor shall also provide the Government a signed, printed copy of the daily CQC report.

1.6.3.2 Deficiency Tracking.

The Contractor shall use QCS to track deficiencies. Deficiencies identified by the Contractor will be numerically tracked using QC punch list items. The Contractor shall maintain a current log of its QC punch list items in the QCS database. The Government will log the deficiencies it has identified using its QA punch list items. The Government's QA punch list items will be included in its export file to the Contractor. The Contractor shall regularly update the correction status of both QC and QA punch list items.

1.6.3.3 Three-Phase Control Meetings

The Contractor shall maintain scheduled and actual dates and times of preparatory and initial control meetings in QCS.

1.6.3.4 Accident/Safety Tracking.

The Government will issue safety comments, directions, or guidance whenever safety deficiencies are observed. The Government's safety comments will be included in its export file to the Contractor. The Contractor shall regularly update the correction status of the safety comments. In addition, the Contractor shall utilize QCS to advise the Government of any accidents occurring on the jobsite. This brief supplemental entry is not to be considered as a substitute for completion of mandatory reports, e.g., ENG Form 3394 and OSHA Form 200.

1.6.3.5 Features of Work

The Contractor shall include a complete list of the features of work in the QCS database. A feature of work may be associated with multiple pay activities. However, each pay activity (see subparagraph "Pay Activity Data" of paragraph "Finances") will only be linked to a single feature of work.

1.6.3.6 QC Requirements

The Contractor shall develop and maintain a complete list of QC testing, transferred and installed property, and user training requirements in QCS. The Contractor shall update all data on these QC requirements as work progresses, and shall promptly provide this information to the Government via QCS.

1.6.4 Submittal Management

The Government will provide the initial submittal register, ENG Form 4288, SUBMITTAL REGISTER, in electronic format. Thereafter, the Contractor shall maintain a complete list of all submittals, including completion of all data columns. Dates on which submittals are received and returned by the Government will be included in its export file to the Contractor. The Contractor shall use QCS to track and transmit all submittals. ENG Form 4025, submittal transmittal form, and the submittal register update, ENG Form 4288, shall be produced using QCS. RMS will be used to update, store and exchange submittal registers and transmittals, but will not be used for storage of actual submittals.

1.6.5 Schedule

The Contractor shall develop a construction schedule consisting of pay activities, in accordance with Contract Clause "Schedules for Construction Contracts", or CONTRACTOR PREPARED NETWORK ANALYSIS SYSTEM (NAS) – PROJECT SCHEDULE, as applicable. This schedule shall be input and maintained in the QCS database either manually or by using the Standard Data Exchange Format (SDEF). (See CONTRACTOR PREPARED NETWORK ANALYSIS SYSTEM (NAS) – PROJECT SCHEDULE.) The updated schedule data shall be included with each pay request submitted by the Contractor.

1.6.6 Import/Export of Data

QCS includes the ability to export Contractor data to the Government and to import submittal register and other Government-provided data, and schedule data using SDEF.

1.7 IMPLEMENTATION

Contractor use of QCS as described in the preceding paragraphs is mandatory. The Contractor shall ensure that sufficient resources are available to maintain its QCS database, and to provide the Government with regular database updates. QCS shall be an integral part of the Contractor's management of quality control.

1.8 DATA SUBMISSION VIA COMPUTER DISKETTE OR CD-ROM

The Government-preferred method for Contractor's submission of updates, payment requests, correspondence and other data is by E-mail with file attachment(s). For locations where this is not feasible, the Contracting Officer may permit use of computer diskettes or CD-ROM for data transfer. Data on the disks or CDs shall be exported using the QCS built-in export function. If used, diskettes and CD-ROMs will be submitted in accordance with the following:

1.8.1 File Medium

The Contractor shall submit required data on 3-1/2 inch double-sided high-density diskettes formatted to hold 1.44 MB of data, capable of running under Microsoft Windows 95 or newer. Alternatively, CD-ROMs may be used. They shall conform to industry standards used in the United States. All data shall be provided in English.

1.8.2 Disk or CD-ROM Labels

The Contractor shall affix a permanent exterior label to each diskette and CD-ROM submitted. The label shall indicate in English, the QCS file name, full contract number, contract name, project location, data date, name and telephone number of person responsible for the data.

1.8.3 File Names

The Government will provide the file names to be used by the Contractor with the QCS software.

1.9 MONTHLY COORDINATION MEETING

The Contractor shall update the QCS database each workday. At least monthly, the Contractor shall generate and submit an export file to the Government with schedule update and progress payment request. As required in Contract Clause "Payments", at least one week prior to submittal, the Contractor shall meet with the Government representative to review the planned progress payment data submission for errors and omissions. The Contractor shall make all required corrections prior to Government acceptance of the export file and progress payment request. Payment requests accompanied by incomplete or incorrect data submittals will be returned. The Government will not process progress payments until an acceptable QCS export file is received.

1.10 NOTIFICATION OF NONCOMPLIANCE

The Contracting Officer will notify the Contractor of any detected noncompliance with the requirements of this specification. The Contractor shall take immediate corrective action after receipt of such notice. Such notice, when delivered to the Contractor at the work site, shall be deemed sufficient for the purpose of notification.

-- End of Section --

SECTION TABLE OF CONTENTS

DIVISION 01 - GENERAL REQUIREMENTS

SECTION 01320A

PROJECT SCHEDULE

05/02

PART 1 GENERAL

1.1 REFERENCES
1.2 QUALIFICATIONS

PART 2 PRODUCTS (Not Applicable)

PART 3 EXECUTION

3.1 GENERAL REQUIREMENTS
3.2 BASIS FOR PAYMENT
3.3 PROJECT SCHEDULE
3.3.1 Use of the Critical Path Method
3.3.2 Level of Detail Required
3.3.2.1 Activity Durations
3.3.2.2 Design and Permit Activities
3.3.2.3 Procurement Activities
3.3.2.4 Critical Activities
3.3.2.5 Government Activities
3.3.2.6 Responsibility
3.3.2.7 Work Areas
3.3.2.8 Modification or Claim Number
3.3.2.9 Bid Item
3.3.2.10 Phase of Work
3.3.2.11 Category of Work
3.3.2.12 Feature of Work
3.3.3 Scheduled Project Completion
3.3.3.1 Project Start Date
3.3.3.2 Constraint of Last Activity
3.3.3.3 Early Project Completion
3.3.4 Interim Completion Dates
3.3.4.1 Start Phase
3.3.4.2 End Phase
3.3.4.3 Phase X
3.3.5 Default Progress Data Disallowed
3.3.6 Out-of-Sequence Progress
3.3.7 Negative Lags
3.4 PROJECT SCHEDULE SUBMISSIONS
3.4.1 Preliminary Project Schedule Submission
3.4.2 Initial Project Schedule Submission
3.4.3 Periodic Schedule Updates
3.4.4 Standard Activity Coding Dictionary
3.5 SUBMISSION REQUIREMENTS
3.5.1 Data Disks
3.5.1.1 File Medium

3.5.1.2 Disk Label
3.5.1.3 File Name
3.5.2 Narrative Report
3.5.3 Approved Changes Verification
3.5.4 Schedule Reports
3.5.4.1 Activity Report
3.5.4.2 Logic Report
3.5.4.3 Total Float Report
3.5.4.4 Earnings Report
3.5.5 Network Diagram
3.5.5.1 Continuous Flow
3.5.5.2 Project Milestone Dates
3.5.5.3 Critical Path
3.5.5.4 Banding
3.5.5.5 S-Curves
3.6 PERIODIC PROGRESS MEETINGS
3.6.1 Meeting Attendance
3.6.2 Update Submission Following Progress Meeting
3.6.3 Progress Meeting Contents
3.6.3.1 Start and Finish Dates
3.6.3.2 Time Completion
3.6.3.3 Cost Completion
3.6.3.4 Logic Changes
3.6.3.5 Other Changes
3.7 REQUESTS FOR TIME EXTENSIONS
3.7.1 Justification of Delay
3.7.2 Submission Requirements
3.7.3 Additional Submission Requirements
3.8 DIRECTED CHANGES
3.9 OWNERSHIP OF FLOAT

-- End of Section Table of Contents --

SECTION 01320A

PROJECT SCHEDULE
05/02

PART 1 GENERAL

1.1 REFERENCES

The publications listed below form a part of the specification to the extent referenced. The publications are referenced in the text by basic designation only.

U.S. ARMY CORPS OF ENGINEERS (USACE)

ER 1-1-11	(1995) Progress, Schedules, and Network Analysis Systems

1.2 QUALIFICATIONS

The Contractor shall designate an authorized representative who shall be responsible for the preparation of all required project schedule reports.

PART 2 PRODUCTS (Not Applicable)

PART 3 EXECUTION

3.1 GENERAL REQUIREMENTS

Pursuant to the Contract Clause, SCHEDULE FOR CONSTRUCTION CONTRACTS, a Project Schedule as described below shall be prepared. The scheduling of constructiondesign and construction shall be the responsibility of the Contractor. Contractor management personnel shall actively participate in its development. Designers, Subcontractors and suppliers working on the project shall also contribute in developing and maintaining an accurate Project Schedule. The approved Project Schedule shall be used to measure the progress of the work, to aid in evaluating time extensions, and to provide the basis of all progress payments.

3.2 BASIS FOR PAYMENT

The schedule shall be the basis for measuring Contractor progress. Lack of an approved schedule or scheduling personnel will result in an inability of the Contracting Officer to evaluate Contractor's progress for the purposes of payment. Failure of the Contractor to provide all information, as specified below, shall result in the disapproval of the entire Project Schedule submission and the inability of the Contracting Officer to evaluate Contractor progress for payment purposes. In the case where Project Schedule revisions have been directed by the Contracting Officer and those revisions have not been included in the Project Schedule, the Contracting Officer may hold retainage up to the maximum allowed by contract, each payment period, until revisions to the Project Schedule have been made.

3.3 PROJECT SCHEDULE

The computer software system utilized by the Contractor to produce the Project Schedule shall be capable of providing all requirements of this specification. Failure of the Contractor to meet the requirements of this specification shall result in the disapproval of the schedule. Manual methods used to produce any required information shall require approval by the Contracting Officer.

3.3.1 Use of the Critical Path Method

The Critical Path Method (CPM) of network calculation shall be used to generate the Project Schedule. The Contractor shall provide the Project Schedule in the Precedence Diagram Method (PDM).

3.3.2 Level of Detail Required

The Project Schedule shall include an appropriate level of detail. Failure to develop or update the Project Schedule or provide data to the Contracting Officer at the appropriate level of detail, as specified by the Contracting Officer, shall result in the disapproval of the schedule. The Contracting Officer will use, but is not limited to, the following conditions to determine the appropriate level of detail to be used in the Project Schedule:

3.3.2.1 Activity Durations

Contractor submissions shall follow the direction of the Contracting Officer regarding reasonable activity durations. Reasonable durations are those that allow the progress of activities to be accurately determined between payment periods (usually less than 2 percent of all non-procurement activities' Original Durations are greater than 20 days).

3.3.2.2 Design and Permit Activities

Design and permitting activities, including necessary conferences and follow-up actions and design package submission dates, shall be integrated into the schedule.

3.3.2.3 Procurement Activities

Tasks related to the procurement of long lead materials or equipment shall be included as separate activities in the project schedule. Long lead materials and equipment are those materials that have a procurement cycle of over 90 days. Examples of procurement process activities include, but are not limited to: submittals, approvals, procurement, fabrication, and delivery.

3.3.2.4 Critical Activities

The following activities shall be listed as separate line activities on the Contractor's project schedule:

a. Submission and approval of mechanical/electrical layout drawings.

b. Submission and approval of O & M manuals.

c. Submission and approval of as-built drawings.

d. Submission and approval of 1354 data and installed equipment lists.

e. Submission and approval of testing and air balance (TAB).

f. Submission of TAB specialist design review report.

g. Submission and approval of fire protection specialist.

h. Submission and approval of testing and balancing of HVAC plus commissioning plans and data.

i. Air and water balance dates.

j. HVAC commissioning dates.

k. Controls testing plan.

l. Controls testing.

m. Performance Verification testing.

n. Other systems testing, if required.

o. Prefinal inspection.

p. Correction of punchlist from prefinal inspection.

q. Final inspection.

3.3.2.5 Government Activities

Government and other agency activities that could impact progress shall be shown. These activities include, but are not limited to: approvals, approvals, design reviews, environmental permit approvals by State regulators, inspections, utility tie-in, Government Furnished Equipment (GFE) and Notice to Proceed (NTP) for phasing requirements.

3.3.2.6 Responsibility

All activities shall be identified in the project schedule by the party responsible to perform the work. Responsibility includes, but is not limited to, the subcontracting firm, contractor work force, or government agency performing a given task. Activities shall not belong to more than one responsible party. The responsible party for each activity shall be identified by the Responsibility Code.

3.3.2.7 Work Areas

All activities shall be identified in the project schedule by the work area in which the activity occurs. Activities shall not be allowed to cover more than one work area. The work area of each activity shall be identified by the Work Area Code.

3.3.2.8 Modification or Claim Number

Any activity that is added or changed by contract modification or used to justify claimed time shall be identified by a mod or claim code that changed the activity. Activities shall not belong to more than one modification or claim item. The modification or claim number of each activity shall be identified by the Mod or Claim Number. Whenever possible, changes shall be added to the schedule by adding new activities.

Existing activities shall not normally be changed to reflect modifications.

3.3.2.9 Bid Item

All activities shall be identified in the project schedule by the Bid Item to which the activity belongs. An activity shall not contain work in more than one bid item. The bid item for each appropriate activity shall be identified by the Bid Item Code.

3.3.2.10 Phase of Work

All activities shall be identified in the project schedule by the phases of work in which the activity occurs. Activities shall not contain work in more than one phase of work. The project phase of each activity shall be by the unique Phase of Work Code.

3.3.2.11 Category of Work

All Activities shall be identified in the project schedule according to the category of work which best describes the activity. Category of work refers, but is not limited, to the procurement chain of activities including such items as designs, design package submissions design reviews, review conferences, permits, submittals, approvals, procurement, fabrication, delivery, installation, start-up, and testing. The category of work for each activity shall be identified by the Category of Work Code.

3.3.2.12 Feature of Work

All activities shall be identified in the project schedule according to the feature of work to which the activity belongs. Feature of work refers, but is not limited to, a work breakdown structure for the project. The feature of work for each activity shall be identified by the Feature of Work Code.

3.3.3 Scheduled Project Completion

The schedule interval shall extend from NTP to the contract completion date.

3.3.3.1 Project Start Date

The schedule shall start no earlier than the date on which the NTP was acknowledged. The Contractor shall include as the first activity in the project schedule an activity called "Start Project". The "Start Project" activity shall have an "ES" constraint date equal to the date that the NTP was acknowledged, and a zero day duration.

3.3.3.2 Constraint of Last Activity

Completion of the last activity in the schedule shall be constrained by the contract completion date. Calculation on project updates shall be such that if the early finish of the last activity falls after the contract completion date, then the float calculation shall reflect a negative float on the critical path. The Contractor shall include as the last activity in the project schedule an activity called "End Project". The "End Project" activity shall have an "LF" constraint date equal to the completion date for the project, and a zero day duration.

3.3.3.3 Early Project Completion

In the event the project schedule shows completion of the project prior to

the contract completion date, the Contractor shall identify those activities that have been accelerated and/or those activities that are scheduled in parallel to support the Contractor's "early" completion. Contractor shall specifically address each of the activities noted in the narrative report at every project schedule update period to assist the Contracting Officer in evaluating the Contractor's ability to actually complete prior to the contract period.

3.3.4 Interim Completion Dates

Contractually specified interim completion dates shall also be constrained to show negative float if the early finish date of the last activity in that phase falls after the interim completion date.

3.3.4.1 Start Phase

The Contractor shall include as the first activity for a project phase an activity called "Start Phase X" where "X" refers to the phase of work. The "Start Phase X" activity shall have an "ES" constraint date equal to the date on which the NTP was acknowledged, and a zero day duration.

3.3.4.2 End Phase

The Contractor shall include as the last activity in a project phase an activity called "End Phase X" where "X" refers to the phase of work. The "End Phase X" activity shall have an "LF" constraint date equal to the completion date for the project, and a zero day duration.

3.3.4.3 Phase X

The Contractor shall include a hammock type activity for each project phase called "Phase X" where "X" refers to the phase of work. The "Phase X" activity shall be logically tied to the earliest and latest activities in the phase.

3.3.5 Default Progress Data Disallowed

Actual Start and Finish dates shall not be automatically updated by default mechanisms that may be included in CPM scheduling software systems. Actual Start and Finish dates on the CPM schedule shall match those dates provided from Contractor Quality Control Reports. Failure of the Contractor to document the Actual Start and Finish dates on the Daily Quality Control report for every in-progress or completed activity, and failure to ensure that the data contained on the Daily Quality Control reports is the sole basis for schedule updating shall result in the disapproval of the Contractor's schedule and the inability of the Contracting Officer to evaluate Contractor progress for payment purposes. Updating of the percent complete and the remaining duration of any activity shall be independent functions. Program features which calculate one of these parameters from the other shall be disabled.

3.3.6 Out-of-Sequence Progress

Activities that have posted progress without all preceding logic being satisfied (Out-of-Sequence Progress) will be allowed only on a case-by-case approval of the Contracting Officer. The Contractor shall propose logic corrections to eliminate all out of sequence progress or justify not changing the sequencing for approval prior to submitting an updated project schedule.

3.3.7 Negative Lags

Lag durations contained in the project schedule shall not have a negative value.

3.4 PROJECT SCHEDULE SUBMISSIONS

The Contractor shall provide the submissions as described below. The data disk, reports, and network diagrams required for each submission are contained in paragraph SUBMISSION REQUIREMENTS.

3.4.1 Preliminary Project Schedule Submission

The Preliminary Project Schedule, defining the Contractor's planned operations for the first 60 calendar days shall be submitted for approval within 20 calendar days after the NTP is acknowledged. The approved preliminary schedule shall be used for payment purposes not to exceed 60 calendar days after NTP.

3.4.2 Initial Project Schedule Submission

The Initial Project Schedule shall be submitted for approval within 40 calendar days after NTP. The schedule shall provide a reasonable sequence of activities which represent work through the entire project and shall be at a reasonable level of detail.

3.4.3 Periodic Schedule Updates

Based on the result of progress meetings, specified in "Periodic Progress Meetings," the Contractor shall submit periodic schedule updates. These submissions shall enable the Contracting Officer to assess Contractor's progress. If the Contractor fails or refuses to furnish the information and project schedule data, which in the judgement of the Contracting Officer or authorized representative is necessary for verifying the Contractor's progress, the Contractor shall be deemed not to have provided an estimate upon which progress payment may be made.

3.4.4 Standard Activity Coding Dictionary

The Contractor shall use the activity coding structure defined in the Standard Data Exchange Format (SDEF) in ER 1-1-11, Appendix A. This exact structure is mandatory, even if some fields are not used.

3.5 SUBMISSION REQUIREMENTS

The following items shall be submitted by the Contractor for the preliminary submission, initial submission, and every periodic project schedule update throughout the life of the project:

3.5.1 Data Disks

Two data disks containing the project schedule shall be provided. Data on the disks shall adhere to the SDEF format specified in ER 1-1-11, Appendix A.

3.5.1.1 File Medium

Required data shall be submitted on 3.5 disks, formatted to hold 1.44 MB of

data, under the MS-DOS Version 5. or 6.x, unless otherwise approved by the Contracting Officer.

3.5.1.2 Disk Label

A permanent exterior label shall be affixed to each disk submitted. The label shall indicate the type of schedule (Preliminary, Initial, Update, or Change), full contract number, project name, project location, data date, name and telephone number or person responsible for the schedule, and the MS-DOS version used to format the disk.

3.5.1.3 File Name

Each file submitted shall have a name related to either the schedule data date, project name, or contract number. The Contractor shall develop a naming convention that will ensure that the names of the files submitted are unique. The Contractor shall submit the file naming convention to the Contracting Officer for approval.

3.5.2 Narrative Report

A Narrative Report shall be provided with the preliminary, initial, and each update of the project schedule. This report shall be provided as the basis of the Contractor's progress payment request. The Narrative Report shall include: a description of activities along the 2 most critical paths, a description of current and anticipated problem areas or delaying factors and their impact, and an explanation of corrective actions taken or required to be taken. The narrative report is expected to relay to the Government, the Contractor's thorough analysis of the schedule output and its plans to compensate for any problems, either current or potential, which are revealed through that analysis.

3.5.3 Approved Changes Verification

Only project schedule changes that have been previously approved by the Contracting Officer shall be included in the schedule submission. The Narrative Report shall specifically reference, on an activity by activity basis, all changes made since the previous period and relate each change to documented, approved schedule changes.

3.5.4 Schedule Reports

The format for each activity for the schedule reports listed below shall contain: Activity Numbers, Activity Description, Original Duration, Remaining Duration, Early Start Date, Early Finish Date, Late Start Date, Late Finish Date, Total Float. Actual Start and Actual Finish Dates shall be printed for those activities in progress or completed.

3.5.4.1 Activity Report

A list of all activities sorted according to activity number.

3.5.4.2 Logic Report

A list of Preceding and Succeeding activities for every activity in ascending order by activity number. Preceeding and succeeding activities shall include all information listed above in paragraph Schedule Reports. A blank line shall be left between each activity grouping.

3.5.4.3 Total Float Report

A list of all incomplete activities sorted in ascending order of total float. Activities which have the same amount of total float shall be listed in ascending order of Early Start Dates. Completed activities shall not be shown on this report.

3.5.4.4 Earnings Report

A compilation of the Contractor's Total Earnings on the project from the NTP until the most recent Monthly Progress Meeting. This report shall reflect the Earnings of specific activities based on the agreements made in the field and approved between the Contractor and Contracting Officer at the most recent Monthly Progress Meeting. Provided that the Contractor has provided a complete schedule update, this report shall serve as the basis of determining Contractor Payment. Activities shall be grouped by bid item and sorted by activity numbers. This report shall: sum all activities in a bid item and provide a bid item percent; and complete and sum all bid items to provide a total project percent complete. The printed report shall contain, for each activity: the Activity Number, Activity Description, Original Budgeted Amount, Total Quantity, Quantity to Date, Percent Complete (based on cost), and Earnings to Date.

3.5.5 Network Diagram

The network diagram shall be required on the initial schedule submission and on monthly schedule update submissions. The network diagram shall depict and display the order and interdependence of activities and the sequence in which the work is to be accomplished. The Contracting Officer will use, but is not limited to, the following conditions to review compliance with this paragraph:

3.5.5.1 Continuous Flow

Diagrams shall show a continuous flow from left to right with no arrows from right to left. The activity number, description, duration, and estimated earned value shall be shown on the diagram.

3.5.5.2 Project Milestone Dates

Dates shall be shown on the diagram for start of project, any contract required interim completion dates, and contract completion dates.

3.5.5.3 Critical Path

The critical path shall be clearly shown.

3.5.5.4 Banding

Activities shall be grouped to assist in the understanding of the activity sequence. Typically, this flow will group activities by category of work, work area and/or responsibility.

3.5.5.5 S-Curves

Earnings curves showing projected early and late earnings and earnings to date.

3.6 PERIODIC PROGRESS MEETINGS

Progress meetings to discuss payment shall include a monthly onsite meeting or other regular intervals mutually agreed to at the preconstruction conference. During this meeting the Contractor shall describe, on an activity by activity basis, all proposed revisions and adjustments to the project schedule required to reflect the current status of the project. The Contracting Officer will approve activity progress, proposed revisions, and adjustments as appropriate.

3.6.1 Meeting Attendance

The Contractor's Project Manager and Scheduler shall attend the regular progress meeting.

3.6.2 Update Submission Following Progress Meeting

A complete update of the project schedule containing all approved progress, revisions, and adjustments, based on the regular progress meeting, shall be submitted not later than 4 working days after the monthly progress meeting.

3.6.3 Progress Meeting Contents

Update information, including Actual Start Dates, Actual Finish Dates, Remaining Durations, and Cost-to-Date shall be subject to the approval of the Contracting Officer. As a minimum, the Contractor shall address the following items on an activity by activity basis during each progress meeting.

3.6.3.1 Start and Finish Dates

The Actual Start and Actual Finish dates for each activity currently in-progress or completed.

3.6.3.2 Time Completion

The estimated Remaining Duration for each activity in-progress. Time-based progress calculations shall be based on Remaining Duration for each activity.

3.6.3.3 Cost Completion

The earnings for each activity started. Payment will be based on earnings for each in-progress or completed activity. Payment for individual activities will not be made for work that contains quality defects. A portion of the overall project amount may be retained based on delays of activities.

3.6.3.4 Logic Changes

All logic changes pertaining to NTP on change orders, change orders to be incorporated into the schedule, contractor proposed changes in work sequence, corrections to schedule logic for out-of-sequence progress, lag durations, and other changes that have been made pursuant to contract provisions shall be specifically identified and discussed.

3.6.3.5 Other Changes

Other changes required due to delays in completion of any activity or group of activities include: 1) delays beyond the Contractor's control, such as

strikes and unusual weather. 2) delays encountered due to submittals, Government Activities, deliveries or work stoppages which make re-planning the work necessary. 3) Changes required to correct a schedule which does not represent the actual or planned prosecution and progress of the work.

3.7 REQUESTS FOR TIME EXTENSIONS

In the event the Contractor requests an extension of the contract completion date, or any interim milestone date, the Contractor shall furnish the following for a determination as to whether or not the Contractor is entitled to an extension of time under the provisions of the contract: justification, project schedule data, and supporting evidence as the Contracting Officer may deem necessary. Submission of proof of delay, based on revised activity logic, duration, and costs (updated to the specific date that the delay occurred) is obligatory to any approvals.

3.7.1 Justification of Delay

The project schedule shall clearly display that the Contractor has used, in full, all the float time available for the work involved with this request. The Contracting Officer's determination as to the number of allowable days of contract extension shall be based upon the project schedule updates in effect for the time period in question, and other factual information. Actual delays that are found to be caused by the Contractor's own actions, which result in the extension of the schedule, will not be a cause for a time extension to the contract completion date.

3.7.2 Submission Requirements

The Contractor shall submit a justification for each request for a change in the contract completion date of under 2 weeks based upon the most recent schedule update at the time of the NTP or constructive direction issued for the change. Such a request shall be in accordance with the requirements of other appropriate Contract Clauses and shall include, as a minimum:

a. A list of affected activities, with their associated project schedule activity number.

b. A brief explanation of the causes of the change.

c. An analysis of the overall impact of the changes proposed.

d. A sub-network of the affected area.

Activities impacted in each justification for change shall be identified by a unique activity code contained in the required data file.

3.7.3 Additional Submission Requirements

For any requested time extension of over 2 weeks, the Contracting Officer may request an interim update with revised activities for a specific change request. The Contractor shall provide this disk within 4 days of the Contracting Officer's request.

3.8 DIRECTED CHANGES

If the NTP is issued for changes prior to settlement of price and/or time, the Contractor shall submit proposed schedule revisions to the Contracting Officer within 2 weeks of the NTP being issued. The proposed revisions to

the schedule will be approved by the Contracting Officer prior to inclusion of those changes within the project schedule. If the Contractor fails to submit the proposed revisions, the Contracting Officer may furnish the Contractor with suggested revisions to the project schedule. The Contractor shall include these revisions in the project schedule until revisions are submitted, and final changes and impacts have been negotiated. If the Contractor has any objections to the revisions furnished by the Contracting Officer, the Contractor shall advise the Contracting Officer within 2 weeks of receipt of the revisions. Regardless of the objections, the Contractor shall continue to update the schedule with the Contracting Officer's revisions until a mutual agreement in the revisions is reached. If the Contractor fails to submit alternative revisions within 2 weeks of receipt of the Contracting Officer's proposed revisions, the Contractor will be deemed to have concurred with the Contracting Officer's proposed revisions. The proposed revisions will then be the basis for an equitable adjustment for performance of the work.

3.9 OWNERSHIP OF FLOAT

Float available in the schedule, at any time, shall not be considered for the exclusive use of either the Government or the Contractor.

-- End of Section --

SECTION 01330/S
SUBMITTAL PROCEDURES
(DESIGN/BUILD)
10/2000

PART 1 GENERAL

1.1 SUBMITTAL IDENTIFICATION

Submittals required are identified by SD numbers and titles as follows:

SD-01 Preconstruction Submittals

SD-02 Shop Drawings

SD-03 Product Data

SD-04 Samples

SD-05 Design Data

SD-06 Test Reports

SD-07 Certificates

SD-08 Manufacturer's Instructions

SD-09 Manufacturer's Field Reports

SD-10 Operation and Maintenance Data

SD-11 Closeout Submittals

1.2 SUBMITTAL CLASSIFICATION

Submittals are classified as follows:

1.2.1 Designer of Record Approved.

Designer of Record approval is required for extensions of design, critical materials, any deviations from the solicitation, the accepted proposal, or the completed design, equipment whose compatibility with the entire system must be checked, and other items as designated by the Contracting Officer's Representative. Within the terms of the Contract Clause entitled "Specifications and Drawings for Construction", they are considered to be "shop drawings". The Contractor shall provide the Government the number of copies designated hereinafter of all Designer of Record approved submittals. The Government may review any or all Designer of Record approved submittals for conformance to the Solicitation and Accepted Proposal. The Government will review all submittals designated as deviating from the Solicitation or Accepted Proposal, as described below.

1.2.2 Government Approved Construction Submittals.

Administrative Contracting Officer approval is required for any deviations from the Solicitation or Accepted Proposal and other items as designated by the Contracting Officer' Representative. Within the terms of the Contract Clause entitled "Specifications and Drawings for Construction", they are considered to be "shop drawings".

1.2.3 Government Reviewed Extension of Design.

Government review is required for extension of design construction submittals, used to define contract conformity, and for deviation from the completed design. Review will be only for conformance with the contract requirements. Included are only those construction submittals for which the Designer of Record design documents do not include enough detail to ascertain contract compliance. Government review is not required for extensions of design such as structural steel or reinforcement shop drawings.

1.2.4 Information Only.

All submittals not requiring Designer of Record or Government approval will be for information only. They are not considered to be "shop drawings" within the terms of the Contract Clause referred to above.

1.2.5 GOVERNMENT REVIEWED OR "APPROVED" SUBMITTALS

The Contracting Officer's Representative conformance review or approval of submittals shall not be construed as a complete check, but will indicate only that the design, general method of construction, materials, detailing and other information appear to meet the Solicitation and Accepted Proposal. Government Review or approval will not relieve the Contractor of the responsibility for any error which may exist, as the Contractor, under the Design and CQC requirements of this contract, is responsible for design, dimensions, all design extensions, such as the design of adequate connections and details, etc., and the satisfactory construction of all work. After submittals have been reviewed for conformance or approved, as applicable, by the Contracting Officer' Representative, no resubmittal for the purpose of substituting materials or equipment will be considered unless accompanied by an explanation of why a substitution is necessary.

1.3 DISAPPROVED SUBMITTALS

The Contractor shall make all corrections required by the Contracting Officer's Representative, obtain the Designer of Record's approval, when applicable, and promptly furnish a corrected submittal in the form an number of copies specified for the initial submittal. Any "information only" submittal found to contain errors or unapproved deviations from the Solicitation or Accepted Proposal shall be resubmitted as one requiring "approval" action, requiring both Design of Record and Government approval. If the Contractor considers any correction indicated by the Government on the submittals to constitute a change to the contract, it shall promptly provide a notice in accordance with the Contract Clause "Changes" to the Contracting Officer's Representative.

1.4 WITHHOLDING OF PAYMENT

No payment for materials incorporated in the work will be made if all required Designer of Record or required Government approvals have not been obtained. No payment will be made for any materials incorporated into the work for any conformance review submittals or information only submittals found to contain errors or deviations from the Solicitation or Accepted Proposal.

PART 2 PRODUCTS (Not used)

PART 3 EXECUTION

3.1 GENERAL

The Contractor shall make submittals as required by the specifications. The Contracting Officer may request submittals in addition to those specified when deemed necessary to adequately describe the work covered in the respective sections. Units of weights and measures used on all submittals shall be the same as those used in the contract drawings. Each submittal shall be complete and in sufficient detail to allow ready determination of compliance with contract requirements. Prior to submittal, all items shall be checked and approved by the Contractor's Quality Control (CQC) System Manager and each item shall be stamped, signed, and dated by the CQC System Manager indicating action taken. Proposed deviations from the contract requirements shall be clearly identified. Submittals shall include items such as: Contractor's, manufacturer's, or fabricator's drawings; descriptive literature including (but not limited to) catalog cuts, diagrams, operating charts or curves; test reports; test cylinders; samples; O&M manuals (including parts list); certifications; warranties; and other such required submittals. Submittals requiring Government approval shall be scheduled and made prior to the acquisition of the material or equipment covered thereby. Samples remaining upon completion of the work shall be picked up and disposed of in accordance with manufacturer's Material Safety Data Sheets (MSDS) and in compliance with existing laws and regulations.

3.1.1 Design Submittals

The Contractor shall provide design submittals in accordance with Section 01012 entitled “DESIGN AFTER AWARD”.

3.2 SUBMITTAL REGISTER

The Contractor's Designer(s) of Record shall develop a complete list of submittals during design. The Designer of Record shall identify required submittals in the specifications. Use the list to prepare ENG Form 4288 Submittal Register or a computerized equivalent. The list may not be all inclusive and additional submittals may be required by other parts of the contract. The Contractor is required to complete ENG Form 4288 (including columns "a" through "r") and submit to the Contracting Officer for approval within 30 calendar days after Notice to Proceed. The approved submittal register will serve as a scheduling document for submittals and will be used to control submittal actions throughout the contract period. The submit dates and need dates used in the submittal register shall be coordinated with dates in the Contractor prepared progress schedule. Updates to the submittal register showing the Contractor action codes and actual dates with Government action codes and actual dates shall be submitted monthly or until all submittals have been

satisfactorily completed. When the progress schedule is revised, the submittal register shall also be revised and both submitted for approval. The Contractor shall maintain a submittal register for the project in accordance with Section 01312 RESIDENT MANAGEMENT SYSTEM (RMS).

3.3 SCHEDULING

Submittals covering component items forming a system or items that are interrelated shall be scheduled to be coordinated and submitted concurrently. Certifications to be submitted with the pertinent drawings shall be so scheduled. Adequate time (a minimum of 30 calendar days exclusive of mailing time) shall be allowed and shown on the register for review and approval. No delay damages or time extensions will be allowed for time lost in late submittals. An additional 10 calendar days shall be allowed and shown on the register for review and approval of submittals for food service equipment and refrigeration and HVAC control systems.

3.4 TRANSMITTAL FORM (ENG FORM 4025)

The sample transmittal form (ENG Form 4025) attached to this section shall be used for submitting both Government approved and information only submittals in accordance with the instructions on the reverse side of the form. These forms are included in the RMS-QC software that the Contractor is required to use for this contract. This form shall be properly completed by filling out all the heading blank spaces and identifying each item submitted. Special care shall be exercised to ensure proper listing of the specification paragraph and/or sheet number of the contract drawings pertinent to the data submitted for each item.

3.5 SUBMITTAL PROCEDURE

Submittals shall be made as follows:

3.5.1 Procedures

The Contractor shall be responsible for the scheduling and control of all submittals. The Contractor is responsible for confirming that the submittal register includes all submittals required by the contract documents.

In addition to those items listed on ENG Form 4288, the Contractor will furnish submittals for any deviation from the plans or specifications. The scheduled need dates must be recorded on the document for each item for control purposes and critical items must be tied to the Contractor's approved schedule where applicable.

The Contractor will submit to the Contracting Officer for approval a minimum of five copies of all G/RE (Resident/Area Office Review), G/ED (Engineering Division Review) or G/AE (Architect-Engineer Review) level submittals. Three copies of all FIO level submittals will be provided. The number of copies of submittals specified in this portion of the contract shall be complied with in lieu of four copies as specified by FAR 52.236-21.

For those contracts requiring Network Analysis System (NAS), the Contractor will schedule on the NAS critical items of equipment

submittals and procurement activities which will, or have the potential to, significantly impact project completion. The inclusion or exclusion of critical items shall be subject to the approval of the Contracting Officer. Where ENG Form 4025 must be submitted prior to approval of the Construction Progress Schedule, the Contractor shall submit an initial annotated ENG Form 4288 upon which dates for submittal, approval and delivery of procurement items shall be included for the first 60 days of the work. Upon approval of the Construction Progress Schedule, or no later than 60 days after Notice to Proceed, the Contractor shall submit final annotated copies of ENG Form 4288. Dates shall be coordinated with the approved Construction Progress Schedule to logically interface with the sequence of construction. Critical item numbers will be shown on the listing if NAS is required.

Furnishing the schedule shall not be interpreted as relieving the Contractor of his obligation to comply with all the specification requirements for the items on the schedule. Contractor's Quality Control representative shall review the listing at least every 30 days and take appropriate action to maintain an effective system. The Contractor shall furnish a list each 30 days of all submittals on which either Government's or Contractor's action is past due. He shall also furnish revised due dates in those cases when the original submittal schedule is no longer realistic. This monthly list of delayed items shall also be annotated by the Contractor to show what corrective action he is taking with regard to slippages in submittal schedule which are attributable to actions by him, his subcontractors, or suppliers.

The Contractor shall provide a complete updated submittal register indicating the current status of all submittals when requested by the Contracting Officer in order to assure himself the schedule is being maintained.

The Contractor shall certify that each submittal is correct and in strict conformance with the contract drawings and specifications. All submittals not subject to the approval of the Contracting Officer will be submitted for information purposes only.

No Corps of Engineers action will be required prior to incorporating these items into the work, but the submittal shall be furnished to the Area/Resident Engineer not less than 2 weeks prior to procurement of Contractor certified material, equipment, etc.

These Contractor approved submittals will be used to verify that material received and used in the job is the same as that described and approved and will be used as record copies. All samples of materials submitted as required by these specifications shall be properly identified and labeled for ready identification, and upon being certified by the Contractor and reviewed by the Contracting Officer, shall be stored at the site of the work for job site use until all work has been completed and accepted by the Contracting Officer. Delegation of this approval authority to Contractor Quality Control does not relieve the Contractor from the obligation to conform to any contract requirement and will not prevent the Contracting Officer from requiring removal and replacement of construction not in contract conformance; nor does it relieve the Contractor from the requirement to furnish "samples" for testing by the Government Laboratory or check testing by the Government in those instances where the technical specifications so prescribe.

Contractor certified drawings will be subject to quality assurance review by the Government at any time during the duration of the contract. No adjustment for time or money will be allowed for corrections required as a result of noncompliance with plans and specifications.

Submittals Requiring Government Approval (G/ED Level, G/RE Level or G/AE level). Where the review authority is designated to the Government, the Contractor is required to sign the certification on ENG Form 4025 in the box beside the remarks block in Section I. The Government will code the items in block h and sign the approval action block in Section II as the approving authority.

Operating and Maintenance Instructions. Six complete sets of instructions containing the manufacturer's operating and maintenance instructions for each piece of equipment shall be furnished. Each set shall be permanently bound and shall have a hard cover. One complete set shall be furnished at the time test procedures are submitted. Remaining sets shall be furnished before the contract is completed. The following identification shall be inscribed on the covers: The words "OPERATING AND MAINTENANCE INSTRUCTIONS," name and location of the facility, name of the Contractor, and contract number. Fly sheets shall be placed before instructions covering each subject. Instruction sheets shall be approximately 8-1/2 by 11 inches, with large sheets of drawings folded in. Instructions shall include but are not limited to:

(1) System layout showing piping, valves and controls;

(2) Approved wiring and control diagrams;

(3) A control sequence describing startup, operation and shutdown;

(4) Operating and maintenance instructions for each piece of equipment, including lubrication instructions and troubleshooting guide; and

(5) Manufacturer's bulletins, cuts and descriptive data; parts lists and recommended parts.

The Government will further discuss and detail the required submittal procedures at the Pre-Construction Conference.

3.5.2 Deviations

For submittals which include proposed deviations requested by the Contractor, the column "variation" of ENG Form 4025 shall be checked. The Contractor shall set forth in writing the reason for any deviations and annotate such deviations on the submittal. As stated above, the Contractor’s Designer of Record approval is required for any proposed deviations. The Government reserves the right to rescind inadvertent approval of submittals containing unnoted deviations.

3.6 CONTROL OF SUBMITTALS

The Contractor shall carefully control his procurement operations to ensure that each individual submittal is made on or before the Contractor scheduled submittal date shown on the approved "Submittal Register."

3.7 GOVERNMENT CONFORMANCE REVIEW AND APPROVED SUBMITTALS

Upon completion of review of submittals requiring Government approval, the submittals will be identified as having received approval by being so stamped and dated. Four copies of the submittal will be retained by the Contracting Officer and one copy of the submittal will be returned to the Contractor. If the Government performs a conformance review of other Designer of Record approved submittals, the submittals will be so identified and returned, as described above.

3.8 INFORMATION ONLY SUBMITTALS

Normally submittals for information only will not be returned. Approval of the Contracting Officer is not required on information only submittals. The Government reserves the right to require the Contractor to resubmit any item found not to comply with the contract. This does not relieve the Contractor from the obligation to furnish material conforming to the plans and specifications; will not prevent the Contracting Officer from requiring removal and replacement of nonconforming material incorporated in the work; and does not relieve the Contractor of the requirement to furnish samples for testing by the Government laboratory or for check testing by the Government in those instances where the technical specifications so prescribe.

3.9 STAMPS

Stamps used by the Contractor on the submittal data to certify that the submittal meets contract requirements shall be similar to the following:

CONTRACTOR

(Firm Name)

_____ Approved

_____ Approved with corrections as noted on the submittal data and/or attached sheets.

SIGNATURE:_____

TITLE: (DESIGNER OF RECORD)

SECTION 01355A

ENVIRONMENTAL PROTECTION
02/02

PART 1 GENERAL

1.1 REFERENCES

The publications listed below form a part of this specification to the extent referenced. The publications are referred to in the text by basic designation only.

U.S. AIR FORCE (USAF)

AFI 32-1053	Pest Management Program

U.S. ARMY (DA)

AR 200-5	Pest Management

U.S. NATIONAL ARCHIVES AND RECORDS ADMINISTRATION (NARA)

33 CFR 328	Definitions
40 CFR 68	Chemical Accident Prevention Provisions
40 CFR 152 - 186	Pesticide Programs
40 CFR 260	Hazardous Waste Management System: General
40 CFR 261	Identification and Listing of Hazardous Waste
40 CFR 262	Standards Applicable to Generators of Hazardous Waste
40 CFR 279	Standards for the Management of Used Oil
40 CFR 302	Designation, Reportable Quantities, and Notification
40 CFR 355	Emergency Planning and Notification
49 CFR 171 - 178	Hazardous Materials Regulations

U.S. ARMY CORPS OF ENGINEERS (USACE)

EM 385-1-1	(1996) U.S. Army Corps on Engineers Safety and Health Requirements Manual
WETLAND MANUAL	Corps of Engineers Wetlands Delineation Manual Technical Report Y-87-1

1.2 DEFINITIONS

1.2.1 Environmental Pollution and Damage

Environmental pollution and damage is the presence of chemical, physical, or biological elements or agents which adversely affect human health or welfare; unfavorably alter ecological balances of importance to human life; affect other species of importance to humankind; or degrade the environment aesthetically, culturally and/or historically.

1.2.2 Environmental Protection

Environmental protection is the prevention/control of pollution and habitat disruption that may occur to the environment during construction. The control of environmental pollution and damage requires consideration of land, water, and air; biological and cultural resources; and includes management of visual aesthetics; noise; solid, chemical, gaseous, and liquid waste; radiant energy and radioactive material as well as other pollutants.

1.2.3 Contractor Generated Hazardous Waste

Contractor generated hazardous waste means materials that, if abandoned or disposed of, may meet the definition of a hazardous waste. These waste streams would typically consist of material brought on site by the Contractor to execute work, but are not fully consumed during the course of construction. Examples include, but are not limited to, excess paint thinners (i.e. methyl ethyl ketone, toluene etc.), waste thinners,excess paints, excess solvents, waste solvents, and excess pesticides, and contaminated pesticide equipment rinse water.

1.2.4 Installation Pest Management Coordinator

Installation Pest Management Coordinator (IPMC) is the individual officially designated by the Installation Commander to oversee the Installation Pest Management Program and the Installation Pest Management Plan.

1.2.5 Land Application for Discharge Water

The term "Land Application" for discharge water implies that the Contractor shall discharge water at a rate which allows the water to percolate into the soil. No sheeting action, soil erosion, discharge into storm sewers, discharge into defined drainage areas, or discharge into the "waters of the United States" shall occur. Land Application shall be in compliance with all applicable Federal, State, and local laws and regulations.

1.2.6 Pesticide

Pesticide is defined as any substance or mixture of substances intended for preventing, destroying, repelling, or mitigating any pest, or intended for use as a plant regulator, defoliant or desiccant.

1.2.7 Pests

The term "pests" means arthropods, birds, rodents, nematodes, fungi, bacteria, viruses, algae, snails, marine borers, snakes, weeds and other organisms (except for human or animal disease-causing organisms) that adversely affect readiness, military operations, or the well-being of

personnel and animals; attack or damage real property, supplies, equipment, or vegetation; or are otherwise undesirable.

1.2.8 Surface Discharge

The term "Surface Discharge" implies that the water is discharged with possible sheeting action and subsequent soil erosion may occur. Waters that are surface discharged may terminate in drainage ditches, storm sewers,creeks, and/or "waters of the United States" and would require a permit to discharge water from the governing agency.

1.2.9 Waters of the United States

All waters which are under the jurisdiction of the Clean Water Act, as defined in 33 CFR 328.

1.2.10 Wetlands

Wetlands means those areas that are inundated or saturated by surface or ground water at a frequency and duration sufficient to support, and that under normal circumstances do support, a prevalence of vegetation typically adapted for life in saturated soil conditions. Wetlands generally include swamps, marshes, and bogs. Official determination of whether or not an area is classified as a wetland must be done in accordance with WETLAND MANUAL.

1.3 GENERAL REQUIREMENTS

The Contractor shall minimize environmental pollution and damage that may occur as the result of construction operations. The environmental resources within the project boundaries and those affected outside the limits of permanent work shall be protected during the entire duration of this contract. The Contractor shall comply with all applicable environmental Federal, State, and local laws and regulations. The Contractor shall be responsible for any delays resulting from failure to comply with environmental laws and regulations.

1.4 SUBCONTRACTORS

The Contractor shall ensure compliance with this section by subcontractors.

1.5 PAYMENT

No separate payment will be made for work covered under this section. The Contractor shall be responsible for payment of fees associated with environmental permits, application, and/or notices obtained by the Contractor. All costs associated with this section shall be included in the contract price. The Contractor shall be responsible for payment of all fines/fees for violation or non-compliance with Federal, State, Regional and local laws and regulations.

1.6 SUBMITTALS

Government approval is required for submittals with a "G" designation; submittals not having a "G" designation are for information only. When used, a designation following the "G" designation identifies the office that will review the submittal for the Government. The following shall be

submitted in accordance with Section 01330S SUBMITTAL PROCEDURES (DESIGN/BUILD):

SD-01 Preconstruction Submittals

Environmental Protection Plan; G, ED

The environmental protection plan.

1.7 ENVIRONMENTAL PROTECTION PLAN

Prior to commencing construction activities or delivery of materials to the site, the Contractor shall submit seperate Environmental Protection Plans for each hangar for review and approval by the Contracting Officer. The purpose of the Environmental Protection Plan is to present a comprehensive overview of known or potential environmental issues which the Contractor must address during construction. Issues of concern shall be defined within the Environmental Protection Plan as outlined in this section. The Contractor shall address each topic at a level of detail commensurate with the environmental issue and required construction task(s). Topics or issues which are not identified in this section, but which the Contractor considers necessary, shall be identified and discussed after those items formally identified in this section. Prior to submittal of the Environmental Protection Plan, the Contractor shall meet with the Contracting Officer for the purpose of discussing the implementation of the initial Environmental Protection Plan; possible subsequent additions and revisions to the plan including any reporting requirements; and methods for administration of the Contractor's Environmental Plans. The Environmental Protection Plan shall be current and maintained onsite by the Contractor.

1.7.1 Compliance

No requirement in this Section shall be construed as relieving the Contractor of any applicable Federal, State, and local environmental protection laws and regulations. During Construction, the Contractor shall be responsible for identifying, implementing, and submitting for approval any additional requirements to be included in the Environmental Protection Plan.

1.7.2 Contents

The environmental protection plan shall include, but shall not be limited to, the following:

a. Name(s) of person(s) within the Contractor's organization who is(are) responsible for ensuring adherence to the Environmental Protection Plan.

b. Name(s) and qualifications of person(s) responsible for manifesting hazardous waste to be removed from the site, if applicable.

c. Name(s) and qualifications of person(s) responsible for training the Contractor's environmental protection personnel.

d. Description of the Contractor's environmental protection personnel training program.

e. An erosion and sediment control plan which identifies the type and location of the erosion and sediment controls to be provided. The plan shall include monitoring and reporting requirements to assure that the control measures are in compliance with the erosion and sediment control plan, Federal, State, and local laws and regulations. A Storm Water Pollution Prevention Plan (SWPPP) may be substituted for this plan.

f. Drawings showing locations of proposed temporary excavations or embankments for haul roads, stream crossings, material storage areas, structures, sanitary facilities, and stockpiles of excess or spoil materials including methods to control runoff and to contain materials on the site.

g. Traffic control plans including measures to reduce erosion of temporary roadbeds by construction traffic, especially during wet weather. Plan shall include measures to minimize the amount of mud transported onto paved public roads by vehicles or runoff.

h. Work area plan showing the proposed activity in each portion of the area and identifying the areas of limited use or nonuse. Plan should include measures for marking the limits of use areas including methods for protection of features to be preserved within authorized work areas.

i. Drawing showing the location of borrow areas.

j. The Spill Control plan shall include the procedures, instructions, and reports to be used in the event of an unforeseen spill of a substance regulated by 40 CFR 68, 40 CFR 302, 40 CFR 355, and/or regulated under State or Local laws and regulations. The Spill Control Plan supplements the requirements of EM 385-1-1. This plan shall include as a minimum:

1. The name of the individual who will report any spills or hazardous substance releases and who will follow up with complete documentation. This individual shall immediately notify the Contracting Officer and the Facility Fire Department in addition to the legally required Federal, State, and local reporting channels (including the National Response Center 1-800-424-8802) if a reportable quantity is released to the environment. The plan shall contain a list of the required reporting channels and telephone numbers.

2. The name and qualifications of the individual who will be responsible for implementing and supervising the containment and cleanup.

3. Training requirements for Contractor's personnel and methods of accomplishing the training.

4. A list of materials and equipment to be immediately available at the job site, tailored to cleanup work of the potential hazard(s) identified.

5. The names and locations of suppliers of containment materials and locations of additional fuel oil recovery, cleanup, restoration, and material-placement equipment available in case of an unforeseen spill emergency.

6. The methods and procedures to be used for expeditious contaminant cleanup.

k. A non-hazardous solid waste disposal plan identifying methods and locations for solid waste disposal including clearing debris. The plan shall include schedules for disposal. The Contractor shall identify any subcontractors responsible for the transportation and disposal of solid waste. Licenses or permits shall be submitted for solid waste disposal sites that are not a commercial operating facility. Evidence of the disposal facility's acceptance of the solid waste shall be attached to this plan during the construction. The Contractor shall attach a copy of each of the Non-hazardous Solid Waste Diversion Reports to the disposal plan. The report shall be submitted on the first working day after the first quarter that non-hazardous solid waste has been disposed and/or diverted and shall be for the previous quarter (e.g. the first working day of January, April, July, and October). The report shall indicate the total amount of waste generated and total amount of waste diverted in cubic meters (yards) or tons along with the percent that was diverted.

l. A recycling and solid waste minimization plan with a list of measures to reduce consumption of energy and natural resources. The plan shall detail the Contractor's actions to comply with and to participate in Federal, State, Regional, and local government sponsored recycling programs to reduce the volume of solid waste at the source.

m. An air pollution control plan detailing provisions to assure that dust, debris, materials, trash, etc., do not become air borne and travel off the project site.

n. A contaminant prevention plan that: identifies potentially hazardous substances to be used on the job site; identifies the intended actions to prevent introduction of such materials into the air, water, or ground; and details provisions for compliance with Federal, State, and local laws and regulations for storage and handling of these materials. In accordance with EM 385-1-1, a copy of the Material Safety Data Sheets (MSDS) and the maximum quantity of each hazardous material to be on site at any given time shall be included in the contaminant prevention plan. As new hazardous materials are brought on site or removed from the site, the plan shall be updated.

o. A waste water management plan that identifies the methods and procedures for management and/or discharge of waste waters which are directly derived from construction activities, such as concrete curing water, clean-up water, dewatering of ground water, disinfection water, hydrostatic test water, and water used in flushing of lines. If a settling/retention pond is required, the plan shall include the design of the pond including drawings, removal plan, and testing requirements for possible pollutants. If land application will be the method of disposal for the waste water, the plan shall include a sketch showing the location for land application along with a description of the pretreatment methods to be implemented. If surface discharge will be the method of disposal, a copy of the permit and associated documents shall be included as an attachment prior to discharging the waste water. If disposal is to a sanitary sewer, the plan shall include documentation

that the Waste Water Treatment Plant Operator has approved the flow rate, volume, and type of discharge.

p. A historical, archaeological, cultural resources biological resources and wetlands plan that defines procedures for identifying and protecting historical, archaeological, cultural resources, biological resources and wetlands known to be on the project site: and/or identifies procedures to be followed if historical archaeological, cultural resources, biological resources and wetlands not previously known to be onsite or in the area are discovered during construction. The plan shall include methods to assure the protection of known or discovered resources and shall identify lines of communication between Contractor personnel and the Contracting Officer.

q. A pesticide treatment plan shall be included and updated, as information becomes available. The plan shall include: sequence of treatment, dates, times, locations, pesticide trade name, EPA registration numbers, authorized uses, chemical composition, formulation, original and applied concentration, application rates of active ingredient (i.e. pounds of active ingredient applied), equipment used for application and calibration of equipment. The Contractor is responsible for Federal, State, Regional and Local pest management record keeping and reporting requirements as well as any additional Installation specific requirements. The Contractor shall follow [AR 200-5 Pest Management, Chapter 2, Section III "Pest Management Records and Reports" for data required to be reported to the Installation] [AFI 32-1053 Sections 3.4.13 and 3.4.14 for data required to be reported to the Installation].

1.7.3 Appendix

Copies of all environmental permits, permit application packages, approvals to construct, notifications, certifications, reports, and termination documents shall be attached, as an appendix, to the Environmental Protection Plan.

1.8 PROTECTION FEATURES

This paragraph supplements the Contract Clause PROTECTION OF EXISTING VEGETATION, STRUCTURES, EQUIPMENT, UTILITIES, AND IMPROVEMENTS. Prior to start of any onsite construction activities, the Contractor and the Contracting Officer shall make a joint condition survey. Immediately following the survey, the Contractor shall prepare a brief report including a plan describing the features requiring protection under the provisions of the Contract Clauses, which are not specifically identified on the drawings as environmental features requiring protection along with the condition of trees, shrubs and grassed areas immediately adjacent to the site of work and adjacent to the Contractor's assigned storage area and access route(s), as applicable. This survey report shall be signed by both the the Contractor and the Contracting Officer upon mutual agreement as to its accuracy and completeness. The Contractor shall protect those environmental features included in the survey report and any indicated on the drawings, regardless of interference which their preservation may cause to the Contractor's work under the contract.

1.9 SPECIAL ENVIRONMENTAL REQUIREMENTS

The Contractor shall comply with the special environmental requirements indicated in the Design-Build Contractor prepared environmental specifications.

1.10 ENVIRONMENTAL ASSESSMENT OF CONTRACT DEVIATIONS

Any deviations, requested by the Contractor, from the drawings, plans and specifications which may have an environmental impact will be subject to approval by the Contracting Officer and may require an extended review, processing, and approval time. The Contracting Officer reserves the right to disapprove alternate methods, even if they are more cost effective, if the Contracting Officer determines that the proposed alternate method will have an adverse environmental impact.

1.11 NOTIFICATION

The Contracting Officer will notify the Contractor in writing of any observed noncompliance with Federal, State or local environmental laws or regulations, permits, and other elements of the Contractor's Environmental Protection plan. The Contractor shall, after receipt of such notice, inform the Contracting Officer of the proposed corrective action and take such action when approved by the Contracting Officer. The Contracting Officer may issue an order stopping all or part of the work until satisfactory corrective action has been taken. No time extensions shall be granted or equitable adjustments allowed to the Contractor for any such suspensions. This is in addition to any other actions the Contracting Officer may take under the contract, or in accordance with the Federal Acquisition Regulation or Federal Law.

PART 2 PRODUCTS (NOT USED)

PART 3 EXECUTION

3.1 ENVIRONMENTAL PERMITS AND COMMITMENTS

The Contractor shall be responsible for obtaining and complying with all environmental permits and commitments required by Federal, State, Regional, and local environmental laws and regulations.

3.2 LAND RESOURCES

The Contractor shall confine all activities to areas defined by the drawings and specifications. Prior to the beginning of any construction, the Contractor shall identify any land resources to be preserved within the work area. Except in areas indicated on the drawings or specified to be cleared, the Contractor shall not remove, cut, deface, injure, or destroy land resources including trees, shrubs, vines, grasses, topsoil, and land forms without approval. No ropes, cables, or guys shall be fastened to or attached to any trees for anchorage unless specifically authorized. The Contractor shall provide effective protection for land and vegetation resources at all times as defined in the following subparagraphs. Stone, soil, or other materials displaced into uncleared areas shall be removed by the Contractor.

3.2.1 Work Area Limits

Prior to commencing construction activities, the Contractor shall mark the areas that need not be disturbed under this contract. Isolated areas within the general work area which are not to be disturbed shall be marked or fenced. Monuments and markers shall be protected before construction operations commence. Where construction operations are to be conducted during darkness, any markers shall be visible in the dark. The Contractor's personnel shall be knowledgeable of the purpose for marking and/or protecting particular objects.

3.2.2 Landscape

Trees, shrubs, vines, grasses, land forms and other landscape features indicated and defined on the drawings to be preserved shall be clearly identified by marking, fencing, or wrapping with boards, or any other approved techniques. The Contractor shall restore landscape features damaged or destroyed during construction operations outside the limits of the approved work area.

3.2.3 Erosion and Sediment Controls

The Contractor shall be responsible for providing erosion and sediment control measures in accordance with Federal, State, and local laws and regulations. The erosion and sediment controls selected and maintained by the Contractor shall be such that water quality standards are not violated as a result of the Contractor's construction activities. The area of bare soil exposed at any one time by construction operations should be kept to a minimum. The Contractor shall construct or install temporary and permanent erosion and sediment control best management practices (BMPs). BMPs may include, but not be limited to, vegetation cover, stream bank stabilization, slope stabilization, silt fences, construction of terraces, interceptor channels, sediment traps, inlet and outfall protection, diversion channels, and sedimentation basins. The Contractor's best management practices shall also be in accordance with the National Pollutant Discharge Elimination System (NPDES) Storm Water Pollution Prevention Plan (SWPPP) which may be reviewed at the Robins AFB Environmental Office. Any temporary measures shall be removed after the area has been stabilized. Potential impacts related to construction activities and operation of the corrosion control hangars will be minimized through the use of best management practices to control soil erosion at the construction site and/or the Georgia general NPDES permit for construction activities (Permit No. GA100000). A soil and erosion control plan will be required. A soil erosion and sedimentation permit would be required for each hangar since the footprints exceed one acre (Final Environmental Assessment for the Large Aircraft Corrosion Control Hangars, Dec 2002).

3.2.4 Contractor Facilities and Work Areas

The Contractor's field offices, staging areas, stockpile storage, and temporary buildings shall be placed in areas designated on the drawings or as directed by the Contracting Officer. Temporary movement or relocation of Contractor facilities shall be made only when approved. Erosion and sediment controls shall be provided for on-site borrow and spoil areas to prevent sediment from entering nearby waters. Temporary excavation and embankments for plant and/or work areas shall be controlled to protect adjacent areas.

3.3 WATER RESOURCES

The Contractor shall monitor construction activities to prevent pollution of surface and ground waters. Toxic or hazardous chemicals shall not be applied to soil or vegetation unless otherwise indicated. All water areas affected by construction activities shall be monitored by the Contractor. For construction activities immediately adjacent to impaired surface waters, the Contractor shall be capable of quantifying sediment or pollutant loading to that surface water when required by State or Federally issued Clean Water Act permits.

3.3.1 Cofferdams, Diversions, and Dewatering Operations

Construction operations for dewatering, removal of cofferdams, tailrace excavation, and tunnel closure shall be controlled at all times to maintain compliance with existing State water quality standards and designated uses of the surface water body. The Contractor shall comply with the State of Georgia water quality standards and anti-degradation provisions and the Clean Water Act Section 404.

3.3.2 Stream Crossings

Stream crossings shall allow movement of materials or equipment without violating water pollution control standards of the Federal, State, and local governments.

3.3.3 Wetlands

The Contractor shall not enter, disturb, destroy, or allow discharge of contaminants into any wetlands

3.4 AIR RESOURCES

Equipment operation, activities, or processes performed by the Contractor shall be in accordance with all Federal and State air emission and performance laws and standards. **An Air Quality Permit is required from the State of Georgia prior to project approval.**

3.4.1 Particulates

Dust particles; aerosols and gaseous by-products from construction activities; and processing and preparation of materials, such as from asphaltic batch plants; shall be controlled at all times, including weekends, holidays and hours when work is not in progress. The Contractor shall maintain excavations, stockpiles, haul roads, permanent and temporary access roads, plant sites, spoil areas, borrow areas, and other work areas within or outside the project boundaries free from particulates which would cause the Federal, State, and local air pollution standards to be exceeded or which would cause a hazard or a nuisance. Sprinkling, chemical treatment of an approved type, baghouse, scrubbers, electrostatic precipitators or other methods will be permitted to control particulates in the work area. Sprinkling, to be efficient, must be repeated to keep the disturbed area damp at all times. The Contractor must have sufficient, competent equipment available to accomplish these tasks. Particulate control shall be performed as the work proceeds and whenever a particulate nuisance or hazard occurs. The Contractor shall comply with all State and local visibility regulations.

3.4.2 Odors

Odors from construction activities shall be controlled at all times. The odors shall not cause a health hazard and shall be in compliance with State regulations and/or local ordinances.

3.4.3 Sound Intrusions

The Contractor shall keep construction activities under surveillance and control to minimize environment damage by noise. The Contractor shall comply with the provisions of the State of Georgia rules.

3.4.4 Burning

Burning shall be prohibited on the Government premises.

3.6 CHEMICAL MATERIALS MANAGEMENT AND WASTE DISPOSAL

Disposal of wastes shall be as directed below, unless otherwise specified in other sections and/or shown on the drawings.

3.6.1 Solid Wastes

Solid wastes (excluding clearing debris) shall be placed in containers which are emptied on a regular schedule. Handling, storage, and disposal shall be conducted to prevent contamination. Segregation measures shall be employed so that no hazardous or toxic waste will become co-mingled with solid waste. The Contractor shall transport solid waste off Government property and dispose of it in compliance with Federal, State, and local requirements for solid waste disposal. A Subtitle D RCRA permitted landfill shall be the minimum acceptable off-site solid waste disposal option. The Contractor shall verify that the selected transporters and disposal facilities have the necessary permits and licenses to operate. The Contractor shall comply with Federal, State, and local laws and regulations pertaining to the use of landfill areas.]

3.6.2 Chemicals and Chemical Wastes

Chemicals shall be dispensed ensuring no spillage to the ground or water. Periodic inspections of dispensing areas to identify leakage and initiate corrective action shall be performed and documented. This documentation will be periodically reviewed by the Government. Chemical waste shall be collected in corrosion resistant, compatible containers. Collection drums shall be monitored and removed to a staging or storage area when contents are within 150 mm (6 inches) of the top. Wastes shall be classified, managed, stored, and disposed of in accordance with Federal, State, and local laws and regulations.

3.6.3 Contractor Generated Hazardous Wastes/Excess Hazardous Materials

Hazardous wastes are defined in 40 CFR 261, or are as defined by applicable State and local regulations. Hazardous materials are defined in 49 CFR 171 - 178. The Contractor shall, at a minimum, manage and store hazardous waste in compliance with 40 CFR 262 and shall manage and store hazardous waste in accordance with the Installation hazardous waste management plan. The Contractor shall take sufficient measures to prevent spillage of hazardous

and toxic materials during dispensing. The Contractor shall segregate hazardous waste from other materials and wastes, shall protect it from the weather by placing it in a safe covered location, and shall take precautionary measures such as berming or other appropriate measures against accidental spillage. The Contractor shall be responsible for storage, describing, packaging, labeling, marking, and placarding of hazardous waste and hazardous material in accordance with 49 CFR 171 - 178, State, and local laws and regulations. The Contractor shall transport Contractor generated hazardous waste off Government property within 60 days in accordance with the Environmental Protection Agency and the Department of Transportation laws and regulations. The Contractor shall dispose of hazardous waste in compliance with Federal, State and local laws and regulations. Spills of hazardous or toxic materials shall be immediately reported to the Contracting Officer. Cleanup and cleanup costs due to spills shall be the Contractor's responsibility. The disposition of Contractor generated hazardous waste and excess hazardous materials are the Contractor's responsibility.

3.6.4 Fuel and Lubricants

Storage, fueling and lubrication of equipment and motor vehicles shall be conducted in a manner that affords the maximum protection against spill and evaporation. Fuel, lubricants and oil shall be managed and stored in accordance with all Federal, State, Regional, and local laws and regulations. Used lubricants and used oil to be discarded shall be stored in marked corrosion-resistant containers and recycled or disposed in accordance with 40 CFR 279, State, and local laws and regulations. Storage of fuel on the project site shall be accordance with all Federal, State, and local laws and regulations.

3.6.5 Waste Water

Disposal of waste water shall be as specified below.

a. Waste water from construction activities, such as onsite material processing, concrete curing, foundation and concrete clean-up, water used in concrete trucks, forms, etc. shall not be allowed to enter water ways or to be discharged prior to being treated to remove pollutants. The Contractor shall dispose of the construction related waste water off-Government property in accordance with all Federal, State, Regional and Local laws and regulations or by collecting and placing it in a retention pond where suspended material can be settled out and/or the water can evaporate to separate pollutants from the water. The site for the retention pond shall be coordinated and approved with the Contracting Officer. The residue left in the pond prior to completion of the project shall be removed, tested, and disposed off-Government property in accordance with Federal, State, and local laws and regulations. The area shall be backfilled to the original grade, top-soiled and seeded/sodded. The water in the retention pond shall be tested and the results reviewed and approved by the Contracting Officer, prior to being discharged or disposed off-Government property.

b. For discharge of ground water, the Contractor shall surface discharge in accordance with all Federal, State, and local laws and regulations or land apply on the project site. Land application

shall be in accordance with all Federal, State, Regional, and/or Local laws and regulations for pumping and land applying ground water.

c. Water generated from the flushing of lines after disinfection or disinfection in conjunction with hydrostatic testing shall be discharged into the sanitary sewer with prior approval and/or notification to the Waste Water Treatment Plant's Operator.

3.7 RECYCLING AND WASTE MINIMIZATION

The Contractor shall participate in State and local government sponsored recycling programs. The Contractor is further encouraged to minimize solid waste generation throughout the duration of the project.

3.8 NON-HAZARDOUS SOLID WASTE DIVERSION REPORT

The Contractor shall maintain an inventory of non-hazardous solid waste diversion and disposal of construction and demolition debris. The Contractor shall submit a report to Robins AFB through the Contracting Officer on the first working day after each fiscal year quarter, starting the first quarter that non-hazardous solid waste has been generated. The following shall be included in the report:

a. Construction and Demolition (C&D) Debris Disposed = [_____] in cubic meters, (cubic yards or tons,) as appropriate.

b. Construction and Demolition (C&D) Debris Recycled = [_____] in cubic meters, (cubic yards or tons,) as appropriate.

c. Total C&D Debris Generated = [_____] in cubic meters, (cubic yards or tons,) as appropriate.

d. Waste Sent to Waste-To-Energy Incineration Plant (This amount should not be included in the recycled amount) = [_____] in cubic meters, (cubic yards or tons,) as appropriate.

3.9 HISTORICAL, ARCHAEOLOGICAL, AND CULTURAL RESOURCES

If during excavation or other construction activities any previously unidentified or unanticipated historical, archaeological, and cultural resources are discovered or found, all activities that may damage or alter such resources shall be temporarily suspended. Resources covered by this paragraph include but are not limited to: any human skeletal remains or burials; artifacts; shell, midden, bone, charcoal, or other deposits; rock or coral alignments, pavings, wall, or other constructed features; and any indication of agricultural or other human activities. Upon such discovery or find, the Contractor shall immediately notify the Contracting Officer so that the appropriate authorities may be notified and a determination made as to their significance and what, if any, special disposition of the finds should be made. The Contractor shall cease all activities that may result in impact to or the destruction of these resources. The Contractor shall secure the area and prevent employees or other persons from trespassing on, removing, or otherwise disturbing such resources.

3.10 BIOLOGICAL RESOURCES

The Contractor shall minimize interference with, disturbance to, and damage to fish, wildlife, and plants including their habitat. The Contractor shall be responsible for the protection of threatened and endangered animal and plant species including their habitat in accordance with Federal, State, Regional, and local laws and regulations.

3.11 INTEGRATED PEST MANAGEMENT

In order to minimize impacts to existing fauna and flora, the Contractor, through the Contracting Officer, shall coordinate with the Installation Pest Management Coordinator (IPMC) at the earliest possible time prior to pesticide application. The Contractor shall discuss integrated pest management strategies with the IPMC and receive concurrence from the IPMC through the COR prior to the application of any pesticide associated with these specifications. Installation Pest Management personnel shall be given the opportunity to be present at all meetings concerning treatment measures for pest or disease control and during application of the pesticide. The use and management of pesticides are regulated under 40 CFR 152 - 186.

3.11.1 Pesticide Delivery and Storage

Pesticides shall be delivered to the site in the original, unopened containers bearing legible labels indicating the EPA registration number and the manufacturer's registered uses. Pesticides shall be stored according to manufacturer's instructions and under lock and key when unattended.

3.11.2 Qualifications

For the application of pesticides, the Contractor shall use the services of a subcontractor whose principal business is pest control. The subcontractor shall be licensed and certified in the state where the work is to be performed.

3.11.3 Pesticide Handling Requirements

The Contractor shall formulate, treat with, and dispose of pesticides and associated containers in accordance with label directions and shall use the clothing and personal protective equipment specified on the labeling for use during all phases of the application. Material Safety Data Sheets (MSDS)shall be available for all pesticide products.

3.11.4 Application

Pesticides shall be applied by a State Certified Pesticide Applicator in accordance with EPA label restrictions and recommendation. The Certified Applicator shall wear clothing and personal protective equipment as specified on the pesticide label. Water used for formulating shall only come from locations designated by the Contracting Officer. The Contractor shall not allow the equipment to overflow. Prior to application of pesticide, all equipment shall be inspected for leaks, clogging, wear, or damage and shall be repaired prior to being used.

3.12 PREVIOUSLY USED EQUIPMENT

The Contractor shall clean all previously used construction equipment prior to bringing it onto the project site. The Contractor shall ensure that the equipment is free from soil residuals, egg deposits from plant pests,

noxious weeds, and plant seeds. The Contractor shall consult with the USDA jurisdictional office for additional cleaning requirements.

3.13 MAINTENANCE OF POLLUTION FACILITIES

The Contractor shall maintain permanent and temporary pollution control facilities and devices for the duration of the contract or for that length of time construction activities create the particular pollutant.

3.14 MILITARY MUNITIONS

In the event the Contractor discovers or uncovers military munitions as defined in 40 CFR 260, the Contractor shall immediately stop work in that area and immediately inform the Contracting Officer.

3.15 TRAINING OF CONTRACTOR PERSONNEL

The Contractor's personnel shall be trained in all phases of environmental protection and pollution control. The Contractor shall conduct environmental protection/pollution control meetings for all Contractor personnel prior to commencing construction activities. Additional meetings shall be conducted for new personnel and when site conditions change. The training and meeting agenda shall include: methods of detecting and avoiding pollution; familiarization with statutory and contractual pollution standards; installation and care of devices, vegetative covers, and instruments required for monitoring purposes to ensure adequate and continuous environmental protection/pollution control; anticipated hazardous or toxic chemicals or wastes, and other regulated contaminants; recognition and protection of archaeological sites, artifacts, wetlands, and endangered species and their habitat that are known to be in the area.

3.16 CONTAMINATED MEDIA MANAGEMENT

Contaminated environmental media consisting of, but not limited to, ground water, soils, and sediments shall be managed in accordance with BMPs and the Design-Build Contractor prepared environmental specifications.

3.17 POST CONSTRUCTION CLEANUP

The Contractor shall clean up all areas used for construction in accordance with Contract Clause: "Cleaning Up". The Contractor shall, unless otherwise instructed in writing by the Contracting Officer, obliterate all signs of temporary construction facilities such as haul roads, work area, structures, foundations of temporary structures, stockpiles of excess or waste materials, and other vestiges of construction prior to final acceptance of the work. The disturbed area shall be graded, filled and the entire area seeded unless otherwise indicated.

-- End of Section --

SECTION 01415

METRIC MEASUREMENTS
09/01

1.1 REFERENCES

The publications listed below form a part of this specification to the extent referenced. The publications are referred to in the text by basic designation only.

AMERICAN SOCIETY FOR TESTING AND MATERIALS (ASTM)

ASTM E 380	(1993) Practice for Use of the International System of Units (SI)
ASTM E 621	(1994; R 1999el) Practice for Use of Metric (SI) Units in Building Design and Construction

1.2 GENERAL

This project includes metric units of measurements. The metric units used are the International System of Units (SI) developed and maintained by the General Conference on Weights and Measures (CGPM); the name International System of Units and the international abbreviation SI were adopted by the 11th CGPM in 1960. A number of circumstances require that both metric SI units and English inch-pound (I-P) units be included in a section of the specifications. When both metric and I-P measurements are included, the section may contain measurements for products that are manufactured to I-P dimensions and then expressed in mathematically converted metric value (soft metric) or, it may contain measurements for products that are manufactured to an industry recognized rounded metric (hard metric) dimensions but are allowed to be substituted by I-P products to comply with the law. Dual measurements are also included to indicate industry and/or Government standards, test values or other controlling factors, such as the code requirements where I-P values are needed for clarity or to trace back to the referenced standards, test values or codes.

1.3 USE OF MEASUREMENTS

Measurements shall be either in SI or I-P units as indicated, except for soft metric measurements or as otherwise authorized. When only SI or I-P measurements are specified for a product, the product shall be procured in the specified units (SI or I-P) unless otherwise authorized by the Contracting Officer. The Contractor shall be responsible for all associated labor and materials when authorized to substitute one system of units for another and for the final assembly and performance of the specified work and/or products.

1.3.1 Hard Metric

A hard metric measurement is indicated by an SI value with no expressed correlation to an I-P value. Hard metric measurements are often used for field data such as distance from one point to another or distance above the floor. Products are considered to be hard metric when they are manufactured to metric dimensions or have an industry recognized metric designation.

1.3.2 Soft Metric

a. A soft metric measurement is indicated by an SI value which is a mathematical conversion of the I-P value shown in parentheses (e.g. 38.1 mm (1-1/2 inches)). Soft metric measurements are used for measurements pertaining to products, test values, and other situations where the I-P units are the standard for manufacture, verification, or other controlling factor. The I-P value shall govern while the metric measurement is provided for information.

b. A soft metric measurement is also indicated for products that are manufactured in industry designated metric dimensions but are required by law to allow substitute I-P products. These measurements are indicated by a manufacturing hard metric product dimension followed by the substitute I-P equivalent value in parentheses (e.g., 190 x 190 x 390 mm (7-5/8 x 7-5/8 x 15-5/8 inches)).

1.3.3 Neutral

A neutral measurement is indicated by an identifier which has no expressed relation to either an SI or an I-P value (e.g., American Wire Gage (AWG) which indicates thickness but in itself is neither SI nor I-P).

1.4 COORDINATION

Discrepancies, such as mismatches or product unavailability, arising from use of both metric and non-metric measurements and discrepancies between the measurements in the specifications and the measurements in the drawings shall be brought to the attention of the Contracting Officer for resolution.

1.5 RELATIONSHIP TO SUBMITTALS

Submittals for Government approval or for information only shall cover the SI or I-P products actually being furnished for the project. The Contractor shall submit the required drawings and calculations in the same units used in the contract documents describing the product or requirement unless otherwise instructed or approved. The Contractor shall use ASTM E 380 and ASTM E 621 as the basis for establishing metric measurements required to be used in submittals.

-- End of Section --

SECTION 01420

SOURCES FOR REFERENCE PUBLICATIONS
02/02

PART 1 GENERAL

1.1 REFERENCES

Various publications are referenced in other sections of the specifications to establish requirements for the work. These references are identified in each section by document number, date and title. The document number used in the citation is the number assigned by the standards producing organization, (e.g. ASTM B 564 Nickel Alloy Forgings). However, when the standards producing organization has not assigned a number to a document, an identifying number has been assigned for reference purposes.

1.2 ORDERING INFORMATION

The addresses of the standards publishing organizations whose documents are referenced in other sections of these specifications are listed below, and if the source of the publications is different from the address of the sponsoring organization, that information is also provided. Documents listed in the specifications with numbers which were not assigned by the standards producing organization should be ordered from the source by title rather than by number. The designations "AOK" and "LOK" are for administrative purposes and should not be used when ordering publications.

ACI INTERNATIONAL (ACI)
P.O. Box 9094
Farmington Hills, MI 48333-9094
Ph: 248-848-3700
Fax: 248-848-3701
Internet: http://www.aci-int.org
AOK 5/01
LOK 2/01

AIR CONDITIONING AND REFRIGERATION INSTITUTE (ARI)
4301 North Fairfax Dr., Suite 425
ATTN: Pubs Dept.
Arlington, VA 22203
Ph: 703-524-8800
Fax: 703-528-3816
E-mail: ari@ari.org
Internet: http://www.ari.org
AOK 5/01
LOK 2/01

AIR CONDITIONING CONTRACTORS OF AMERICA (ACCA)
2800 Shirlington Road, Suite 300
Arlington, VA 22206
Ph: 703-575-4477
FAX: 703-575-4449
Internet: http://www.acca.org
AOK 5/01
LOK 6/00

AIR DIFFUSION COUNCIL (ADC)

104 So. Michigan Ave., No. 1500
Chicago, IL 60603
Ph: 312-201-0101
Fax: 312-201-0214
Internet: http://www.flexibleduct.org
AOK 5/01
LOK 6/00

AIR MOVEMENT AND CONTROL ASSOCIATION (AMCA)
30 W. University Dr.
Arlington Heights, IL 60004-1893
Ph: 847-394-0150
Fax: 847-253-0088
Internet: http://www.amca.org
AOK 5/01
LOK 2/01

ALUMINUM ASSOCIATION (AA)
900 19th Street N.W.
Washington, DC 20006
Ph: 202-862-5100
Fax: 202-862-5164
Internet: http://www.aluminum.org
AOK 5/01
LOK 2/01

AMERICAN ARCHITECTURAL MANUFACTURERS ASSOCIATION (AAMA)
1827 Walden Ofc. Sq.
Suite 104
Schaumburg, IL 60173-4268
Ph: 847-303-5664
Fax: 847-303-5774
Internet: http://www.aamanet.org
AOK 5/01
LOK 2/01

AMERICAN ASSOCIATION OF STATE HIGHWAY AND TRANSPORTATION OFFICIALS (AASHTO)
444 N. Capital St., NW, Suite 249
Washington, DC 20001
Ph: 800-231-3475 202-624-5800
Fax: 800-525-5562 202-624-5806
Internet: http://www.transportation.org
AOK 5/01
LOK 2/01

AMERICAN ASSOCIATION OF TEXTILE CHEMISTS AND COLORISTS (AATCC)
P.O. Box 12215
Research Triangle Park, NC 27709-2215
Ph: 919-549-8141
Fax: 919-549-8933
Internet: http://www.aatcc.org
AOK 5/01

LOK 2/01

AMERICAN BEARING MANUFACTURERS ASSOCIATION (ABMA)
2025 M Street, NW, Suite 800
Washington, DC 20036
Ph: 202-429-5155
Fax: 202-828-6042
Internet: http://www.abma-dc.org
AOK 5/01
LOK 2/01

AMERICAN BOILER MANUFACTURERS ASSOCIATION (ABMA)
4001 North 9th Street, Suite 226
Arlington, VA 22203-1900
Ph: 703-522-7350
Fax: 703-522-2665
Internet: http://www.abma.com
AOK 5/01
LOK 2/01

AMERICAN CONCRETE PIPE ASSOCIATION (ACPA)
222 West Las Colinas Blvd., Suite 641
Irving, TX 75039-5423
Ph: 972-506-7216
Fax: 972-506-7682
Internet: http://www.concrete-pipe.org
e-mail: info@concrete-pipe.org
AOK 5/01
LOK 6/00

AMERICAN CONFERENCE OF GOVERNMENTAL INDUSTRIAL HYGIENISTS (ACGIH)
1330 Kemper Meadow Dr.
Suite 600
Cincinnati, OH 45240
Ph: 513-742-2020
Fax: 513-742-3355
Internet: http://www.acgih.org
E-mail: pubs@acgih.org
AOK 5/01
LOK 2/01

AMERICAN FOREST & PAPER ASSOCIATION (AF&PA)
American Wood Council
ATTN: Publications Dept.
1111 Nineteenth St. NW, Suite 800
Washington, DC 20036
Ph: 800-294-2372 or 202-463-2700
Fax: 202-463-2471
Internet: http://www.forestprod.org/awc/
AOK 5/01
LOK 6/00

AMERICAN GAS ASSOCIATION (AGA)
400 N. Capitol St. N.W.Suite 450
Washington, D.C. 20001
Ph: 202-824-7000
Fax: 202-824-7115

Internet: http://www.aga.org
AOK 5/01
LOK 2/01

AMERICAN GAS ASSOCIATION LABORATORIES (AGAL)
400 N. Capitol St. N.W.Suite 450
Washington, D.C. 20001
Ph: 202-824-7000
Fax: 202-824-7115
Internet: http://www.aga.org
AOK 10/00
LOK 0/00

AMERICAN GEAR MANUFACTURERS ASSOCIATION (AGMA)
1500 King St., Suite 201
Alexandria, VA 22314-2730
Ph: 703-684-0211
Fax: 703-684-0242
Internet: http://www.agma.org
AOK 5/01
LOK 3/01

AMERICAN INSTITUTE OF STEEL CONSTRUCTION (AISC)
One East Wacker Dr., Suite 3100
Chicago, IL 60601-2001
Ph: 312-670-2400
Publications: 800-644-2400
Fax: 312-670-5403
Internet: http://www.aisc.org
AOK 5/01
LOK 3/01

AMERICAN INSTITUTE OF TIMBER CONSTRUCTION (AITC)
7012 So. Revere Parkway, Suite 140
Englewood, CO 80112
Ph: 303-792-9559
Fax: 303-792-0669
Internet: http://www.aitc-glulam.org
AOK 5/01
LOK 3/01

AMERICAN IRON AND STEEL INSTITUTE (AISI)
1101 17th St., NW Suite 1300
Washington, DC 20036
Ph: 202-452-7100
Internet: http://www.steel.org
AOK 5/01
LOK 3/01

AMERICAN NATIONAL STANDARDS INSTITUTE (ANSI)
1819 L Street, NW, 6th Floor
Washington, DC 20036
Ph: 202-293-8020
Fax: 202-293-9287
Internet: http://www.ansi.org/
Note --- Documents beginning with the letter "S" can be ordered from:
Acoustical Society of America

Standards and Publications Fulfillment Center
P. O. Box 1020
Sewickley, PA 15143-9998
Ph: 412-741-1979
Fax: 412-741-0609
Internet: http://asa.aip.org
General e-mail: asa@aip.org
Publications e-mail: asapubs@abdintl.com
AOK 5/01
LOK 6/00

AMERICAN NURSERY AND LANDSCAPE ASSOCIATION (ANLA)
1250 I St., NW, Suite 500
Washington, DC 20005-3922
Ph: 202-789-2900
FAX: 202-789-1893
Internet: http://www.anla.org
AOK 5/01
LOK 3/01

AMERICAN PETROLEUM INSTITUTE (API)
1220 L St., NW
Washington, DC 20005-4070
Ph: 202-682-8000
Fax: 202-682-8223
Internet: http://www.api.org
AOK 5/01
LOK 3/01

AMERICAN PUBLIC HEALTH ASSOCIATION (APHA)
800 I Street, NW
Washington, DC 20001
PH: 202-777-2742
FAX: 202-777-2534
Internet: http://www.apha.org
AOK 6/01
LOK 0/00

AMERICAN RAILWAY ENGINEERING & MAINTENANCE-OF-WAY ASSOCIATION (AREMA)
8201 Corporate Dr., Suite 1125
Landover, MD 20785-2230
Ph: 301-459-3200
Fax: 301-459-8077
Internet: http://www.arema.org
AOK 5/01
LOK 3/01

AMERICAN SOCIETY FOR NONDESTRUCTIVE TESTING (ASNT)
1711 Arlingate Lane
P.O. Box 28518
Columbus, OH 43228-0518
Ph: 800-222-2768
Fax: 614-274-6899
Internet: http://www.asnt.org
AOK 5/01
LOK 6/00

AMERICAN SOCIETY FOR QUALITY (ASQ)
600 North Plankinton Avenue
Milwaukee, WI 53202-3005
Ph: 800-248-1946
Fax: 414-272-1734
Internet: http://www.asq.org
AOK 5/01
LOK 3/01

AMERICAN SOCIETY FOR TESTING AND MATERIALS (ASTM)
100 Barr Harbor Drive
West Conshohocken, PA 19428-2959
Ph: 610-832-9585
Fax: 610-832-9555
Internet: http://www.astm.org
AOK 5/01
LOK 3/01

AMERICAN SOCIETY OF CIVIL ENGINEERS (ASCE)
1801 Alexander Bell Drive
Reston, VA 20191-4400
Ph: 703-295-6300 - 800-548-2723
Fax: 703-295-6222
Internet: http://www.asce.org
e-mail: marketing@asce.org
AOK 5/01
LOK 3/01

AMERICAN SOCIETY OF HEATING, REFRIGERATING AND AIR-CONDITIONING ENGINEERS (ASHRAE)
1791 Tullie Circle, NE
Atlanta, GA 30329
Ph: 800-527-4723 or 404-636-8400
Fax: 404-321-5478
Internet: http://www.ashrae.org
AOK 5/01
LOK 3/01

AMERICAN SOCIETY OF SANITARY ENGINEERING (ASSE)
901 Canterbury, Suite A
Westlake, OH 44145
Ph: 440-835-3040
Fax: 440-835-3488
E-mail: asse@ix.netcom.com
Internet: http://www.asse-plumbing.org
AOK 5/01
LOK 3/01

AMERICAN WATER WORKS ASSOCIATION(AWWA)
6666 West Quincy
Denver, CO 80235
Ph: 800-926-7337 - 303-794-7711
Fax: 303-794-7310
Internet: http://www.awwa.org
AOK 5/01
LOK 3/01

AMERICAN WELDING SOCIETY (AWS)
550 N.W. LeJeune Road
Miami, FL 33126
Ph: 800-443-9353 - 305-443-9353
Fax: 305-443-7559
Internet: http://www.amweld.org
AOK 5/01
LOK 3/01

AMERICAN WOOD-PRESERVERS' ASSOCIATION (AWPA)
P.O. Box 5690
Grandbury, TX 76049-0690
Ph: 817-326-6300
Fax: 817-326-6306
Internet: http://www.awpa.com
AOK 5/01
LOK 3/01

APA - THE ENGINEERED WOOD ASSOCIATION (APA)
P.O.Box 11700
Tacoma, WA 98411-0700
Ph: 253-565-6600
Fax: 253-565-7265
Internet: http://www.apawood.org
AOK 5/01
LOK 6/00

ARCHITECTURAL & TRANSPORTATION BARRIERS COMPLIANCE BOARD (ATBCB)

The Access Board

1331 F Street, NW, Suite 1000

Washington, DC 20004-1111

PH: 202-272-5434

FAX: 202-272-5447

Internet: http://www.access-board.gov

AOK 6/01

LOK 0/00

ARCHITECTURAL WOODWORK INSTITUTE (AWI)
1952 Isaac Newton Square West
Reston, VA 20190
Ph: 703-733-0600
Fax: 703-733-0584
Internet: http://www.awinet.org
AOK 5/01
LOK 6/00

ASBESTOS CEMENT PIPE PRODUCERS ASSOCIATION (ACPPA)
PMB114-1745 Jefferson Davis Highway
Arlington, VA 22202
Ph: 514-861-1153
Fax: 514-861-1152
Internet: None

AOK 11/01
LOK 0/00

ASM INTERNATIONAL (ASM)
9639 Kinsman Road
Materials Park, OH 44073-0002
Ph: 440-338-5151
Fax: 440-338-4634
Internet: http://www.asm-intl.org
Order Publications From:
ASM International
ATTN: MSC/Book Order
P.O. Box 473
Novelty, OH 44072-9901
AOK 5/01
LOK 0/00

ASME INTERNATIONAL (ASME)
Three Park Avenue
New York, NY 10016-5990
Ph: 212-591-7722
Fax: 212-591-7674
Internet: http://www.asme.org
AOK 5/01
LOK 6/00

ASPHALT INSTITUTE (AI)
Research Park Dr.
P.O. Box 14052
Lexington, KY 40512-4052
Ph: 859-288-4960
Fax: 859-288-4999
Internet: http://www.asphaltinstitute.org
AOK 5/01
LOK 6/00

ASSOCIATED AIR BALANCE COUNCIL (AABC)
1518 K St., NW, Suite 503
Washington, DC 20005
Ph: 202-737-0202
Fax: 202-638-4833
Internet: http://www.aabchq.com
E-mail: aabchq@aol.com
AOK 5/01
LOK 6/00

ASSOCIATION FOR THE ADVANCEMENT OF MEDICAL INSTRUMENTATION (AAMI)
1110 N. Glebe Rd., Suite 220
Arlington, VA 22201-5762
Ph: 703-525-4890
Fax: 703-276-0793
Internet: http://www.aami.org
AOK 5/01
LOK 6/00

ASSOCIATION OF EDISON ILLUMINATING COMPANIES (AEIC)
600 No. 18th St.

P.O. Box 2641
Birmingham, AL 35291
Ph: 205-257-2530
Fax: 205-257-2540
Internet: http://www.aeic.org
AOK 5/01
LOK 6/00

ASSOCIATION OF HOME APPLIANCE MANUFACTURERS (AHAM)
1111 19th St. NW., Suite 402
Washington, DC 20036
Ph: 202-872-5955
Fax: 202-872-9354
Internet: http://www.aham.org
AOK 5/01
LOK 6/00

BIFMA INTERNATIONAL (BIFMA)
2680 Horizon Drive SE, Suite A-1
Grand Rapids, MI 49546-7500
Ph: 616-285-3963
Fax: 616-285-3765
Internet: http://www.bifma.com
E-mail: email@bifma.com
AOK 5/01
LOK 6/00

BIOCYCLE, JOURNAL OF COMPOSTING AND RECYCLING (BIOCYCLE)
The JG Press Inc.
419 State Avenue
Emmaus PA. 18049
Ph: 610-967-4135
Internet: http://www.biocycle.net
E-mail: jgpress@jgpress.com
AOK 5/01
LOK 0/00

BRICK INDUSTRY ASSOCIATION (BIA)
11490 Commerce Park Dr., Suite 308
Reston, VA 22091-1525
Ph: 703-620-0010
Fax: 703-620-3928
Internet: http://www.brickinfo.org
AOK 5/01
LOK 6/00

BRITISH STANDARDS INSTITUTE (BSI)
389 Chiswick High Road
London W4 4AL
United Kingdom
Phone: +44 (0)20 8996 9000
Fax: +44 (0)20 8996 7400
Email: Info@bsi-global.com
Website: http://www.bsi-global.com
AOK 8/01
LOK 6/01

BUILDERS HARDWARE MANUFACTURERS ASSOCIATION (BHMA)
355 Lexington Ave.
17th floor
New York, NY 10017-6603
Ph: 212-297-2122
Fax: 212-370-9047
Internet: http://www.buildershardware.com
AOK 5/01
LOK 6/00

CARPET AND RUG INSTITUTE (CRI)
310 Holiday Ave.
Dalton, GA 30720
P.O. Box 2048
Dalton, GA 30722-2048
Ph: 706-278-0232
Fax: 706-278-8835
Internet: http://www.carpet-rug.com
AOK 5/01
LOK 6/00

CAST IRON SOIL PIPE INSTITUTE (CISPI)
5959 Shallowford Rd., Suite 419
Chattanooga, TN 37421
Ph: 423-892-0137
Fax: 423-892-0817
Internet: http://www.cispi.org
AOK 5/01
LOK 6/00

CEILINGS & INTERIOR SYSTEMS CONSTRUCTION ASSOCIATION (CISCA)
1500 Lincoln Highway, Suite 202
St. Charles, IL 60174
Ph: 630-584-1919
Fax: 630-584-2003
Internet: http://www.cisca.org
AOK 5/01
LOK 6/00

CENTERS FOR DISEASE CONTROL AND PREVENTION (CDC)

1600 Clifton Road

Atlanta, GA 30333

PH: 404-639-3534

FAX:

Internet: http://www.cdc.gov

AOK 6/01

LOK 0/00

CHEMICAL FABRICS & FILM ASSOCIATION (CFFA)

1300 Sumner Ave.

Cleveland OH 44115-2851

PH: 216-241-7333

FAX: 216-241-0105

Internet: http://www.chemicalfabricsandfilm.com/welcome.htm

AOK 6/01

CHLORINE INSTITUTE (CI)
2001 L St., NW Suite 506
Washington, DC 20036
Ph: 202-775-2790
Fax: 202-223-7225
Internet: http://www.cl2.com
AOK 5/01
LOK 6/00

COMPRESSED AIR AND GAS INSTITUTE (CAGI)

1300 Sumner Ave.

Cleveland OH 44115-2851

PH: 216-241-7333

FAX: 216-241-0105

Internet: http://www.cagi.org/welcome.htm

AOK 6/01

COMPRESSED GAS ASSOCIATION (CGA)
4221 Walney Road, 5th Floor
Chantilly, VA 20151-2923
Ph: 703-788-2700
Fax: 703-961-1831
Internet: http://www.cganet.com
e-mail: Customer_Service@cganet.com
AOK 9/01
LOK 6/00

CONCRETE REINFORCING STEEL INSTITUTE (CRSI)
933 N. Plum Grove Rd.
Schaumburg, IL 60173-4758
Ph: 847-517-1200
Fax: 847-517-1206
Internet: http://www.crsi.org/
AOK 5/01
LOK 6/00

CONSUMER PRODUCT SAFETY COMMISSION (CPSC)
4330 East-West Highway
Bethesda, Maryland 20814-4408
Ph: 301-504-0990
Fx: 301-504-0124 and 301-504-0025
Internet: http://www.cpsc.gov
AOK 5/01
LOK 6/00

CONVEYOR EQUIPMENT MANUFACTURERS ASSOCIATION (CEMA)

6724 Lone Oak Blvd.
Naples, Florida 34109
Ph: 941-514-3441
Fax: 941-514-3470
Internet: http://www.cemanet.org
AOK 5/01
LOK 6/00

COOLING TECHNOLOGY INSTITUTE (CTI)
530 Wells Fargo Dr., Suite 218, Houston, TX 77090
Ph: 281-583-4087
Fax: 281-537-1721
Internet: http://www.cti.org
AOK 5/01
LOK 6/00

COPPER DEVELOPMENT ASSOCIATION (CDA)
260 Madison Ave.
New York, NY 10016
Ph: 212-251-7200
Fax: 212-251-7234
Internet: http://www.copper.org
E-mail: staff@cda.copper.org
AOK 5/01
LOK 6/00

CRANE MANUFACTURERS ASSOCIATION OF AMERICA (CMAA)
8720 Red Oak Blvd., Ste, 201
Charlotte, NC 28217 USA
Ph: 704-676-1190/800722-6832
Fx: 704-676-1199
Internet: http://www.mhia.org/psc/psc_products_cranes.cfm
AOK 6/01
LOK 0/00

DISTRICT OF COLUMBIA MUNICIPAL REGULATIONS (DCMR)

441 4th Street NW

Wachington DC 20001

PH: 202-727-1000

Internet: http://www.abfa.com/dcdocs/dcmrlist.htm

AOK 6/01

DOOR AND ACCESS SYSTEM MANUFACTURERS ASSOCIATION (DASMA)
1300 Sumner Avenue
Cleveland, OH 44115-2851
Ph: 216-241-7333
Fax: 216-241-0105
Internet: http://www.dasma.com
e-mail: dasma@dasma.com
AOK 5/01
LOK 6/00

DOOR AND HARDWARE INSTITUTE (DHI)
14150 Newbrook Dr.Suite 200

Chantilly, VA 20151-2223
Ph: 703-222-2010
Fax: 703-222-2410
Internet: http://www.dhi.org
e-mail: techdept@dhi.org
AOK 5/01
LOK 6/00

DUCTILE IRON PIPE RESEARCH ASSOCIATION (DIPRA)
245 Riverchase Parkway East, Suite 0
Birmingham, AL 35244
Ph: 205-402-8700
Fax: 205-402-8730
Internet: http://www.dipra.org
E-mail: info@dipra.org
AOK 5/01
LOK 6/00

EIFS INDUSTRY MEMBERS ASSOCIATION (EIMA)
3000 Corporate Center Drive, Suite 270
Morrow, GA 30260
Ph: 800-294-3462
Fax: 770-968-5818
Internet: http://www.eifsfacts.com
AOK 11/01
LOK 6/00

ELECTRICAL GENERATING SYSTEMS ASSOCIATION (EGSA)
1650 South Dixie Highway, Ste. 500
Boca Raton, FL 33432
Ph: 561-750-5575
Fax: 561-395-8557
Internet: http://www.egsa.org
AOK 5/01
LOK 6/00

ELECTRONIC INDUSTRIES ALLIANCE (EIA)
2500 Wilson Blvd.
Arlington, VA 22201-3834
Ph: 703-907-7500
Fax: 703-907-7501
Internet: http://www.eia.org
AOK 5/01
LOK 6/00

ENERGY RESEARCH AND DEVELOPMENT ADMINISTRATION (ERDA)
Address not available
PH:
FAX:
Internet: http://www.hr.doe.gov/seab/ytfch3.html
AOK 6/01
LOK

ENGINE MANUFACTURERS ASSOCIATION (EMA)

Two North LaSalle Street, Suite 2200

Chicago, Il 60602

PH: 312-827-8700

FAX: 312-827-8737

Internet: http://www.engine-manufacturers.org/index.cfm

AOK 6/01

EUROPEAN COMMITTEE FOR ELECTROTECHNICAL STANDARDIZATION (CENELEC)
CENELEC CS Info & Publications Department
Rue de Stassartstraat 35
1050 Brussels
Phone: + 32 2 519 68 71
Fax: + 32 2 519 69 19
Internet: http://www.cenelec.org
AOK 9/01

EXPANSION JOINT MANUFACTURERS ASSOCIATION (EJMA)
25 N Broadway
Tarrytown, NY 10591
Ph: 914-332-0040
Fax: 914-332-1541
Internet: http://www.ejma.org
AOK 5/01
LOK 6/00

FACTORY MUTUAL ENGINEERING AND RESEARCH (FM)
500 River Ridge Drive
Norwood, MA 02062
Ph: 781-255-6681
Ph: (Toll-Free): 877-364-6726
Fax: 781-255-0181
Internet: http://www.fmglobal.com
AOK 5/01
LOK 6/00

FLUID SEALING ASSOCIATION (FSA)
994 Old Eagle School Road #1019
Wayne, PA 19087
610.971.4850 (USA)
Internet: http://www.fluidsealing.com
E-mail: info@fluidsealing.com
AOK 6/01

FORESTRY SUPPLIERS (FSUP)
205 West Rankin St.
P.O. Box 8397
Jackson, MS 39284-8397
Ph: 601-354-3565
Fax: 601-292-0165
Internet: http://www.forestry-suppliers.com
AOK 5/01
LOK 6/00

FOUNDATION FOR CROSS-CONNECTION CONTROL AND HYDRAULIC RESEARCH (FCCCHR)
University of South California
Kaprielian Hall 200

Los Angeles, CA 90089-2531
Ph: 213-740-2032
Fax: 213-740-8399
Internet: http://www.usc.edu/dept/fccchr
AOK 5/01
LOK 6/00

GEOLOGICAL SOCIETY OF AMERICA (GSA)
P.O. Box 9140
Boulder, CO 80301-9140
3300 Penrose Place
Boulder, CO 80301-1806
Ph: 800-447-472-1988
Fax: 303-447-1133
Internet: http://www.geosociety.org
AOK 5/01
LOK 6/00

GEOSYNTHETIC INSTITUTE (GSI)
475 Kedron Ave.
Folsom, PA 19033-1208
Ph: 610-522-8440
Fax: 610-522-8441
Internet: http://geosynthetic-institute.org
AOK 5/01
LOK 6/00

GERMANY INSTITUTE FOR STANDARDIZATION (DIN)
BURGGRAFENSTRAE 6
POSTFACH 11 07
10787 BERLIN
GERMANY
Internet: http://www.gsf.de
Ph: 49-30-2601-2260
Fax: 49-30-2601-1231
AOK 8/00
LOK 6/00
Order from a United States publications service.

GLASS ASSOCIATION OF NORTH AMERICA (GANA)
2945 SW Wanamaker Drive, Suite A
Topeka, KS 66614-5321
Ph: 785-271-0208
Fax: 785-271-0166
Internet: http://www.glasswebsite.com/GANA
AOK 5/01
LOK 6/00

GYPSUM ASSOCIATION (GA)
810 First St. NE, Suite 510
Washington, DC 20002
Ph: 202-289-5440
Fax: 202-289-3707
Internet: http://www.gypsum.org
AOK 5/01
LOK 6/00

HARDWOOD PLYWOOD & VENEER ASSOCIATION (HPVA)
1825 Michael Faraday Dr.
P.O. Box 2789
Reston, VA 20195-0789
Ph: 703-435-2900
Fax: 703-435-2537
Internet: http://www.hpva.org
AOK 5/01
LOK 6/00

HEAT EXCHANGE INSTITUTE (HEI)
1300 Sumner Ave
Cleveland, OH 44115-2851
Ph: 216-241-7333
Fax: 216-241-0105
Internet: http://www.heatexchange.org
email: hei@heatexchange.org
AOK 5/01
LOK 6/00

HOIST MANUFACTURERS INSTITUTE (HMI)

8720 Red Oak Blvd., Suite 201

Charlotte, NC 28217

PH: 704-676-1190

FAX: 704-676-1199

Internet: http://www.mhia.org/psc/PSC_Products_Hoists.cfm

AOK 6/01

LOK 0/00

HOLLOW METAL MANUFACTURERS ASSOCIATION (HMMA)

NAAMM Headquarters

8 South Michigan Avenue, Suite 1000

Chicago, IL 60603

PH: 312-332-0405

FAX: 312-332-0706

Internet: http://www.naamm.org/hmma.htm

AOK 6/01

LOK 0/00

NOTE --- HMMA has merged with NAAAM.

H.P. WHITE LABORATORY (HPW)
3114 Scarboro Rd.
Street, MD 21154
Ph: 410-838-6550
fax: 410-838-2802
Internet: http://www.hpwhite.com
AOK 5/01
LOK 6/00

HYDRAULIC INSTITUTE (HI)
9 Sylvan Way, Suite 180
Parsippany, NJ 07054-3802
Ph: 888-786-7744 or 973-267-9700
Fax: 973-267-9055
Internet: http://www.pumps.org
AOK 5/01
LOK 6/00

HYDRONICS INSTITUTE DIVISION OF GAMA (HYI)
35 Russo Pl.
P.O. Box 218
Berkeley Heights, NJ 07922-0218
Ph: 908-464-8200
Fax: 908-464-7818
Internet: http://www.gamanet.org/publist/hydroordr.htm
AOK 5/01
LOK 6/00

IBM CORPORATION (IBM)
Publications
P.O. Box 29570
Raleigh, NC 27626-0570
Ph: 800-879-2755, Option 1
Fax: 800-445-9269
Internet: http://www.ibm.com/shop/publications/order
AOK 5/01
LOK 6/00

ILLUMINATING ENGINEERING SOCIETY OF NORTH AMERICA (IESNA)
120 Wall St., 17th Floor
New York, NY 10005-4001
Ph: 212-248-5000
Fax: 212-248-5017
Internet: http://www.iesna.org
AOK 5/01
LOK 6/00

INDUSTRIAL FASTENERS INSTITUTE (IFI)
1717 East 9th St., Suite 1105
Cleveland, OH 44114-2879
Ph: 216-241-1482
Fax: 216-241-5901
Internet: http://www.industrial-fasteners.org
e-mail: indfast@aol.com
AOK 5/01
LOK 6/00

INSECT SCREENING WEAVERS ASSOCIATION (ISWA)
DEFUNCT in 1997
P.O. Box 1018
Ossining, NY 10562 (Can not verify address)
Ph: 914-962-9052 (Not in Service)
Fax: 914-923-3031
Internet: None found
AOK 0/00

LOK 0/00

INSTITUTE OF CLEAN AIR COMPANIES (ICAC)
1660 L St., NW, Suite 1100
Washington, DC 20036-5603
Ph: 202-457-0911
Fax: 202-331-1388
E-mail: sjenkins@icac.com
Internet: http://icac.com
AOK 5/01
LOK 6/00

INSTITUTE OF ELECTRICAL AND ELECTRONICS ENGINEERS (IEEE)
445 Hoes Ln, P. O. Box 1331
Piscataway, NJ 08855-1331
Ph: 732-981-0060 OR 800-701-4333
Fax: 732-981-9667
Internet: http://www.ieee.org
E-mail: customer.services@ieee.org
AOK 5/01
LOK 6/00

INSTITUTE OF ENVIRONMENTAL SCIENCES AND TECHNOLOGY (IEST)
940 East Northwest Highway
Mount Prospect, IL 60056
Ph: 847-255-1561
Fax: 847-255-1699
Internet: http://www.iest.org
AOK 5/01
LOK 12/00

INSULATED CABLE ENGINEERS ASSOCIATION (ICEA)
P.O. Box 440
South Yarmouth, MA 02664
Ph: 508-394-4424
Fax: 508-394-1194
E-mail:
Internet: http://www.icea.net
AOK 5/01
LOK 6/00

INTERNATIONAL APPROVAL SERVICES (IAS)
8501 East Pleasant Valley Rd.
Cleveland, OH 44131
Ph: 216-524-4990
Fax: 216-328-8118
Internet: http://www.iasapprovals.org
AOK 5/01
LOK 6/00

INTERNATIONAL ASSOCIATION OF PLUMBING AND MECHANICAL OFFICIALS (IAPMO)
20001 Walnut Dr., So.
Walnut, CA 91789-2825
Ph: 909-595-8449
Fax: 909-594-3690
Fax for Stds: 909-594-5265

Internet: http://www.iapmo.org
AOK 5/01
LOK 6/00

INTERNATIONAL CODE COUNCIL (ICC)
5203 Leesburg Pike, Suite 600
Falls Church, VA 22041
Ph: 703-931-4533
Fax: 703-379-1546
Internet: http://www.intlcode.org
AOK 5/01
LOK 6/00

INTERNATIONAL CONCRETE REPAIR INSTITUTE (ICRI)

3166 S. River Road, Suite 132

Des Plaines, IL 60018

Phone: 847-827-0830

Fax: 847-827-0832

Internet: http://www.icri.org

AOK 9/01

LOK 0/00

INTERNATIONAL CONFERENCE OF BUILDING OFFICIALS (ICBO)
5360 Workman Mill Rd.
Whittier, CA 90601-2298
Ph: 800-284-4406
Ph: 562-699-0541
Fax: 562-692-3853
Internet: http://www.icbo.org
AOK 5/01
LOK 6/00

INTERNATIONAL ELECTRICAL TESTING ASSOCIATION (NETA)

P.O. Box 687

106 Stone Street

Morrison, Colorado 80465

PH: 303-697-8441

FAX: 303-697-8431

Internet: http://www.netaworld.org

AOK 6/01

INTERNATIONAL ELECTROTECHNICAL COMMISSION (IEC)
3, rue de Varembe, P.O. Box 131
CH-1211 Geneva 20, Switzerland
Ph: 41-22-919-0211
Fax: 41-22-919-0300
Internet: http://www.iec.ch
e-mail: info@iec.ch
AOK 5/01

LOK 6/00

INTERNATIONAL GROUND SOURCE HEAT PUMP ASSOCIATION (IGSHPA)
490 Cordell South
Stillwater OK 74078-8018
PH: 800-626-4747
FAX: 405-744-5283
Internet: http://www.igshpa.okstate.edu/
AOK 6/01
LOK 0/00

INTERNATIONAL INSTITUTE OF AMMONIA REFRIGERATION (IIAR)
1110 N. Glebe Rd., Suite 250
Arlington, VA 22201
Ph: 703-312-4200
Fax: 703-312-0065
Internet: http://www.iiar.org
e-mail: iiar@iiar.org
AOK 5/01
LOK 6/00

INTERNATIONAL MUNICIPAL SIGNAL ASSOCIATION (IMSA)
P.O. Box 539
165 East Union St.
Newark, NY 14513-0539
Ph: 315-331-2182
Ph: 800-723-4672
Fax: 315-331-8205
Internet: http://www.imsasafety.org/imsapubl.htm
AOK 5/01
LOK 6/00

INTERNATIONAL ORGANIZATION FOR STANDARDIZATION (ISO)
1, rue de Varembe'
Case Postale 56
CH-1211 Geneve 20
Ph: 41-22-749-0111
Fax: 41-22-733-3430
Internet: http://www.iso.ch
e-mail: central@iso.ch
AOK 5/01
LOK 6/00

INTERNATIONAL SLURRY SURFACING ASSOCIATION (ISSA)
3 Church Circle, PMB 250
Annapolis, MD 21401
Ph: 410-267-0023
Fax: 410-267-7546
Internet: http://www.slurry.org
e-mail: krissoff@slurry.org
AOK 5/01
LOK 6/00

INTERNATIONAL TELECOMMUNICATION UNION (ITU)
Order from:
U.S. Dept of Commerce
National Technical Information Service
5285 Port Royal Road.
Springfield, VA 22161
Ph: 703-605-6040
FAX: 703-605-6887
Internet: http://www.ntis.gov
For documents not avail from Dept of Commerce:
Sales Service
International Telecommunication Union
Place des Nations
CH-1211 Geneve 20
Switzerland
E-Mail: sales@itu.ch
Ph: 41.22.730.6141
Fax: 41.22.730.5194
Internet: http://www.itu.org
AOK 5/01
LOK 6/00

IPC - ASSOCIATION CONNECTING ELECTRONICS INDUSTRIES (IPC)
2215 Sanders Rd.
Northbrook, IL 60062-6135
Ph: 847-509-9700
Fax: 847-509-9798
Internet: http://www.ipc.org
e-mail: orderipc@ipc.org
AOK 5/01
LOK 6/00

IRON & STEEL SOCIETY (ISS)
186 Thorn Hill Road
Warrendale, PA 15086-7528
Ph: 724-776-1535 Ext 1
Fax: 724-776-0430
E-Mail: dennisf@iss.org
Internet: http://www.issource.org
AOK 5/01
LOK 6/00

ISA - THE INSTRUMENTATION, SYSTEMS AND AUTOMATION SOCIETY (ISA)
67 Alexander Drive
P.O. Box 12277
Research Triangle Park, NC 27709
Ph: 919-549-8411
Fax: 919-549-8288
e-mail: info@isa.org
Internet: http://www.isa.org
AOK 5/01
LOK 6/00

KITCHEN CABINET MANUFACTURERS ASSOCIATION (KCMA)
1899 Preston White Dr.
Reston, VA 20191-5435
Ph: 703-264-1690

Fax: 703-620-6530
Internet: http://www.kcma.org
AOK 5/01
LOK 6/00

L.H. BAILEY HORTORIUM (LHBH)
c/o Cornell University
Information and Referral Center
Day Hall Lobby
Ithaca, NY 14853-2801
PH: 607-254-INFO (4636)
Internet: http://www.plantbio.cornell.edu/Hortorium
AOK 6/01
LOK 0/00

MANUFACTURERS STANDARDIZATION SOCIETY OF THE VALVE AND FITTINGS INDUSTRY (MSS)
127 Park St., NE
Vienna, VA 22180-4602
Ph: 703-281-6613
Fax: 703-281-6671
Internet: http://www.mss-hq.com
e-mail: info@mss-hq.com
AOK 5/01
LOK 6/00

MAPLE FLOORING MANUFACTURERS ASSOCIATION (MFMA)
60 Revere Dr., Suite 500
Northbrook, IL 60062
Ph: 847-480-9138
Fax: 847-480-9282
Internet: http://www.maplefloor.org
AOK 5/01
LOK 6/00

MARBLE INSTITUTE OF AMERICA (MIA)
30 Eden Alley, Suite 301
Columbus, OH 43215
Ph: 614-228-6194
Fax: 614-461-1497
Internet: http://www.marble-institute.com
e-mail: stoneassociations@hotmail.com
AOK 5/01
LOK 6/00

MASTER PAINTERS INSTITUTE (MPI)
4090 Graveley Street
Burnaby, BC CANADA V5C 3T6
PH: 888-674-8937
Fx: 888-211-8708
Internet: http://www.paintinfo.com/mpi
AOK 9/01

LOK 0/00

MATERIAL HANDLING INDUSTRY OF AMERICA (MHI)
8720 Red Oak Blvd., Suite 201
Charlotte, NC 28217-3992
Ph: 800-345-1815 or 704-676-1190
Fax: 704-676-1199
Internet: http://www.mhia.org
AOK 5/01
LOK 6/00

METAL BUILDING MANUFACTURERS ASSOCIATION (MBMA)
1300 Sumner Ave.
Cleveland, OH 44115-2851
Ph: 216-241-7333
Fax: 216-241-0105
Internet: http://www.mbma.com
e-mail: mbma@mbma.com
AOK 5/01
LOK 6/00

METAL LATH/STEEL FRAMING ASSOCIATION (ML/SFA)

NAAMM Headquarters

8 South Michigan Avenue, Suite 1000

Chicago, IL 60603

PH: 312-332-0405

FAX: 312-332-0706

Internet: http://www.naamm.org/mlsfa.htm

AOK 6/01

LOK 0/00

NOTE --- ML/SFA has merged with NAAM.

MIDWEST INSULATION CONTRACTORS ASSOCIATION (MICA)
2017 So. 139th Cir.
Omaha, NE 68144
Ph: 402-342-3463
Fax: 402-330-9702
Internet: http://www.micainsulation.org
e-mail: info@micainsulation.org
AOK 5/01
LOK 6/00

MONORAIL MANUFACTURERS ASSOCIATION (MMA)

8720 Red Oak Blvd., Suite 201

Charlotte, NC 28217

PH: 704-676-1190

FAX: 704-676-1199

Internet: http://www.mhia.org/

AOK 6/01

LOK 0/00

NACE INTERNATIONAL (NACE)
1440 South Creek Drive
Houston, TX 77084-4906
Ph: 281-228-6200
Fax: 281-228-6300
Internet: http://www.nace.org
AOK 5/01
LOK 6/00

NATIONAL ASSOCIATION OF ARCHITECTURAL METAL MANUFACTURERS (NAAMM)
8 S. Michigan Ave, Suite 1000
Chicago, IL 60603
Ph: 312-782-4951
Fax: 312-332-0405
Internet: <URL>http://www.naamm.org</URL>
e-mail: naamm@gss.net
AOK 5/01
LOK 6/00

NATIONAL BOARD OF BOILER AND PRESSURE VESSEL INSPECTORS (NBBPVI)
1055 Crupper Ave.
Columbus, OH 43229-1183
Ph: 614-888-8320
Fax: 614-847-1147
Internet: http://www.nationalboard.org
e-mail: tbecker@nationalboard.org
LOK 5/01
AOK 12/00

NATIONAL CABLE TELEVISION ASSOCIATION (NCTA)
1724 Massachusetts Ave. NW
Washington, DC 20036-1969
Ph: 202-775-3550
Fax: 202-775-1055
Internet: http://www.ncta.com
AOK 5/01
LOK 6/00

NATIONAL CONCRETE MASONRY ASSOCIATION (NCMA)

2302 Horse Pen Road

Herndon, VA 20171-3499

Ph: 703-713-1900

Fax: 703-713-1910

Internet: http://www.ncma.org

AOK 9/01

LOK 0/00

NATIONAL COUNCIL ON RADIATION PROTECTION AND MEASUREMENTS (NCRP)
7910 Woodmont Ave., Suite 800
Bethesda, MD 20814-3095

Ph: 800-229-2652
Ph. 301-657-2652
Fax: 301-907-8768
Internet: http://www.ncrp.com
AOK 5/01
LOK 6/00

NATIONAL DRILLING ASSOCIATION (NDA)

6089 Franz Road, Suite 101

Dublin, OH 43017

Ph: 614-798-8080

FAX: 614-798-2255

Internet: http://www.nda4u.com/

AOK 10/01

LOK 0/0

NATIONAL ELECTRICAL MANUFACTURERS ASSOCIATION (NEMA)
1300 N. 17th St., Suite 1847
Rosslyn, VA 22209
Ph: 703-841-3200
Fax: 703-841-3300
Internet: http://www.nema.org/
AOK 5/01
LOK 6/00

NATIONAL ENVIRONMENTAL BALANCING BUREAU (NEBB)
8575 Grovemont Circle
Gaithersburg, MD 20877-4121
Ph: 301-977-3698
Fax: 301-977-9589
Internet: http://www.nebb.org
AOK 5/01
LOK 6/00

NATIONAL FENESTRATION RATING COUNCIL (NFRC)
1300 Spring Street, Suite 500
Silver Spring, MD 20910
Ph: 301-589-6372
Fax: 303-588-6342
Internet: http://www.nfrc.org
E-Mail: nfrcusa@aol.com or info@nfrc.com
AOK 5/01
LOK 6/00

NATIONAL FIRE PROTECTION ASSOCIATION (NFPA)
1 Batterymarch Park
P.O. Box 9101
Quincy, MA 02269-9101
Ph: 617-770-3000
Fax: 617-770-0700
Internet: http://www.nfpa.org
AOK 5/01
LOK 8/00

NATIONAL FLUID POWER ASSOCIATION (NFLPA)
3333 N. Mayfair Rd.
Milwaukee, WI 53222-3219
Ph: 414-778-3344
Fax: 414-778-3361
Internet: http://www.nfpa.com
E-mail: nfpa@nfpa.com
AOK 5/01
LOK 6/00

NATIONAL HARDWOOD LUMBER ASSOCIATION (NHLA)
P.O. Box 34518
Memphis, TN 38184-0518
Ph: 901-377-1818
Fax: 901-382-6419
e-mail: info@natlhardwood.org
Internet: http://www.natlhardwood.org
AOK 5/01
LOK 6/00

NATIONAL INSTITUTE FOR CERTIFICATION IN ENGINEERING TECHNOLOGIES (NICET)
1420 King Street
Alexandria, VA 22314-2794
Ph: 888-476-4238
Internet: http://www.nicet.org
AOK 5/01
LOK 6/00

NATIONAL INSTITUTE FOR OCCUPATIONAL SAFETY AND HEALTH (NIOSH)
Mail Stop C-13
4676 Columbia Parkway
Cincinnati, OH 45226-1998
Ph: 800-356-4674
Fx: 513-533-8573
Internet: http://www.cdc.gov/niosh/homepage.html
To order pubs for which a fee is charged, order from:
Superintendent of Documents
U.S. Government Printing Office
732 North Capitol Street, NW
Mailstop: SDE
Washington, DC 20401
Ph: 202-512-1530
Fax: 202-512-1262
Internet: http://www.gpo.gov
AOK 5/01
LOK 6/00

NATIONAL INSTITUTE OF JUSTICE (NIJ)
National Law Enforcement and Corrections Technology Center
2277 Research Blvd. - Mailstop 1E
Rockville, MD 20850
Ph: 800-248-2742 or 301-519-5060
Fax: 301-519-5149
Internet: http://www.nlectc.org
e-mail: asknlectc@nlectc.org

AOK 5/01
LOK 6/00

NATIONAL INSTITUTE OF STANDARDS AND TECHNOLOGY (NIST)
100 Bureau Drive
Stop 3460
Gaithersburg, MD 20899-3460
Ph: 301-975-NIST
Internet: http://www.nist.gov
Order Publications From:
Superintendent of Documents
U.S. Government Printing Office
732 North Capitol Street, NW
Mailstop: SDE
Washington, DC 20401
Ph: 202-512-1530
Fax: 202-512-1262
Internet: http://www.gpo.gov
or
National Technical Information Services (NTIS)
5285 Port Royal Rd.
Springfield, VA 22161
Ph: 703-605-6000
Fax: 703-605-6900
Internet: http://www.ntis.gov
AOK 5/01
LOK 6/00

NATIONAL LIME ASSOCIATION (NLA)

200 North Glebe Road, Suite 800

Arlington, VA 22203

PH: 703-243-5463

FAX: 703-243-5489

Internet: http://www.lime.org

AOK 6/01

LOK 0/00

NATIONAL OAK FLOORING MANUFACTURERS ASSOCIATION (NOFMA)
P.O. Box 3009
Memphis, TN 38173-0009
Ph: 901-526-5016
Fax: 901-526-7022
Internet: http://www.nofma.org
AOK 5/01
LOK 6/00

NATIONAL READY-MIXED CONCRETE ASSOCIATION (NRMCA)
900 Spring St.
Silver Spring, MD 20910
Ph: 301-587-1400
Fax: 301-585-4219
Internet: http://www.nrmca.org
AOK 5/01

LOK 6/00

NATIONAL ROOFING CONTRACTORS ASSOCIATION (NRCA)
10255 W. higgins Rd., Suite 600
Rosemont, IL 60018
Ph: 847-299-9070
Fax: 847-299-1183
Internet: http://www.nrca.net
AOK 5/01
LOK 6/00

NATIONAL TERRAZZO & MOSAIC ASSOCIATION (NTMA)
110 East Market St., Suite 200 A
Leesburg, Virginia 20176
Ph: 703-779-1022 or 800-323-9736
Fax: 703-779-1026
Internet: http://www.ntma.com
e-mail: info@ntma.com
AOK 5/01
LOK 6/00

NATURAL RESOURCE, AGRICULTURAL AND ENGINEERING SERVICE (NRAES)

Cooperative Extension

152 Riley-Robb Hall

Ithaca, NY 14853-5701

Ph: 607-255-7654

Fax: 607-254-8770

Internet: http://www.nraes.org

E-mail: nraes@cornell.edu

AOK 5/01

LOK 6/00

NORTH AMERICAN INSULATION MANUFACTURERS ASSOCIATION (NAIMA)
44 Canal Center Plaza, Suite 310
Alexandria, VA 22314
Ph: 703-684-0084
Fax: 703-684-0427
Internet: http://www.naima.org
e-mail: insulation@naima.org
AOK 5/01
LOK 6/00

NORTHEASTERN LUMBER MANUFACTURERS ASSOCIATION (NELMA)
272 Tuttle Road
P.O. Box 87A
Cumberland Center, ME 04021
Ph: 207-829-6901
Fax: 207-829-4293
Internet: http://www.nelma.org
e-mail: nelma@javanet.com
AOK 5/01
LOK 6/00

NSF INTERNATIONAL (NSF)
ATTN: Publications
789 North Dixboro Rd.
P.O. Box 130140
Ann Arbor, MI 48113-0140
Ph: 734-769-8010
Fax: 734-769-0109
Toll Free: 800-NSF-MARK
Internet: http://www.nsf.org
AOK 5/01
LOK 6/00

PIPE FABRICATION INSTITUTE (PFI)
655 32nd Avenue, Suite 201
Lachine, QC, Canada H8T 3G6
Ph: 514-634-3434
Fax: 514-634-9736
Internet: http://www.pfi-institute.org
e-mail: pfi@pfi-institute.org
AOK 5/01
LOK 6/00

PLASTIC PIPE AND FITTINGS ASSOCIATION (PPFA)
800 Roosevelt Rd., Bldg C, Suite 20
Glen Ellyn, IL 60137
Ph: 630-858-6540
Fax: 630-790-3095
Internet: http://www.ppfahome.org
AOK 5/01
LOK 6/00

PLASTICS PIPE INSTITUTE (PPI)
1825 Connecticut Ave. NW
Washington, D. C. 20009
Ph: 202-462-9607
Fax: 202-462-9779
Internet: http://www.plasticpipe.org
AOK 5/01
LOK 6/00

PLUMBING AND DRAINAGE INSTITUTE (PDI)
45 Bristol Dr.
South Easton, MA 02375
Ph: 508-230-3516 or 800-589-8956
Fax: 508-230-3529
Internet: http://www.pdionline.org
E-Mail: info@pdionline.org
AOK 5/01
LOK 6/00

PLUMBING AND PIPING INDUSTRY COUNCIL (PPIC)
9450 SW Commerce Circle, Suite 310
Wilsonville, OR 97070-9626
Ph: 503-682-7919
Fax: 503-682-6241
Internet: http://www.pmcaoregon.com/

AOK 11/01
LOK 0/00

PLUMBING-HEATING-COOLING CONTRACTORS NATIONAL ASSOCIATION (NAPHCC)
180 S. Washington Street
P.O. Box 6808
Falls Church, VA 22040
Ph: 800-533-7694
Fax: 703-237-7442
Internet: http://www.phccweb.org
AOK 5/01
LOK 6/00

PORCELAIN ENAMEL INSTITUTE (PEI)
5696 Peachtree Parkway, PO Box 920220
Norcross, GA 30092
Ph: 770-242-2632
Fax: 770-446-1452
Internet: http://www.porcelainenamel.com
e-mail: penamel@aol.com
AOK 5/01
LOK 6/00

POST-TENSIONING INSTITUTE (PTI)
1717 West Northern Avenue, Suite 114
Phoenix, AZ 85021
Ph: 602-870-7540
Fax: 602-870-7541
Internet: http://www.post-tensioning.org/
AOK 1/02
LOK 1/02

PRECAST/PRESTRESSED CONCRETE INSTITUTE (PCI)
209 West Jackson Blvd.
Chicago, IL 60606-6938
Ph: 312-786-0300
Fax: 312-786-0353
Internet: http://www.pci.org
e-mail: info@pci.org
AOK 5/01
LOK 6/00

REDWOOD INSPECTION SERVICE (RIS)

405 Efrente Drive, Suite 200

Novato, CA 94949

Ph: 415-382-0662

Fax: 415-382-8531

Internet: http://www.calredwood.org

E-Mail: cjjourdain@worldnet.att.net

AOK 8/01

LOK 0/00

RUBBER MANUFACTURERS ASSOCIATION (RMA)
1400 K St., NW, Suite 900
Washington, DC 20005
Ph: 202-682-4800
Fax: 202-682-4854
Internet: http://www.rma.org
Order Publications from:
The Mail Room
P. O. Box 3147
Medina, OH 44258
Ph: 800-325-5095 EXT 242 or 330-723-2978
Fax: 330-725-0576
AOK 5/01
LOK 6/00

SCIENTIFIC CERTIFICATION SYSTEMS (SCS)
1939 Harrison Street, Suite 400
Oakland, CA 94612
Ph: 510-832-1415
FAX: 510-832-0359
Internet: http://www.scs1.org
AOK 11/01
LOK

SCREEN MANUFACTURERS ASSOCIATION (SMA)
2850 South Ocean Boulevard, Suite 311
Palm Beach, FL 33480-5535
Ph: 561-533-0991
Fax: 561-533-7466
e-mail: fitzgeraldfscott@aol.com
Internet: http://www.screenmfgassociation.org
AOK 5/01
LOK 6/00

SEMICONDUCTOR EQUIPMENT AND MATERIALS INTERNATIONAL (SEMI)
3081 Zanker Road
San Jose, CA 95134
Phone: 1.408.943.6900
Fax: 1.408.428.9600
Internet: http://www.semi.org
E-mail: semihq@semi.org
AOK 6/01

LOK 0/00

SHEET METAL & AIR CONDITIONING CONTRACTORS' NATIONAL ASSOCIATION (SMACNA)
4201 Lafayette Center Dr.,
Chantilly, VA 20151-1209
Ph: 703-803-2980
Fax: 703-803-3732
Internet: http://www.smacna.org
e-mail: info@smacna.org
AOK 5/01
LOK 6/00

SINGLE PLY ROOFING INSTITUTE (SPRI)
200 Reservoir St., Suite 309A
Needham, MA 02494
Ph: 781-444-0242
Fax: 781-444-6111
Internet: http://www.spri.org
e-mail: spri@spri.org
AOK 5/01
LOK 6/00

NOTE --- Name is now just SPRI.

SOCIETY OF AUTOMOTIVE ENGINEERS INTERNATIONAL (SAE)
400 Commonwealth Dr.
Warrendale, PA 15096-0001
Ph: 724-776-4841
Fax: 724-776-5760
Internet: http://www.sae.org
e-mail: custsvc@sae.org
AOK 5/01
LOK 6/00

SOCIETY FOR MOTION PICTURE & TELEVISION ENGINEERS (SMPTE)

595 West Hartsdale Avenue

WhitePlains, New York 10607

PH: 914-761-1100

FAX: 914-761-3115

Internet: http://www.smpte.org

AOK 6/01

LOK 0/00

NOTE --- Organization name is now Society of Motion Picture & Television Engineers.

SOCIETY OF THE PLASTICS INDUSTRY (SPI)

1801 K Street, NW, Suite 600K

Washington, DC 20006

PH: 202-974-5200

FX: 202-296-7005

Internet: http://www.socplas.org

AOK 11/01

LOK 0/00

SOLAR RATING AND CERTIFICATION CORPORATION (SRCC)

c/o FSEC, 1679 Clearlake Road

Cocoa, FL 32922-5703

PH: 321-638-1537

FAX: 321-638-1010

Internet: http://www.solar-rating.org

AOK 6/01

LOK 0/00

SOUTHERN CYPRESS MANUFACTURERS ASSOCIATION (SCMA)
400 Penn Center Boulevard, Suite 530
Pittsburgh, PA 15235
Ph: 412-829-0770
Fax: 412-829-0844
Internet: http://www.cypressinfo.org
AOK 5/01
LOK 6/00

SOUTHERN PINE INSPECTION BUREAU (SPIB)
4709 Scenic Highway
Pensacola, FL 32504-9094
Ph: 850-434-2611
Fax: 850-433-5594
e-mail: spib@spib.org
Internet: http://www.spib.org
AOK 5/01
LOK 6/00

STATE OF CALIFORNIA DEPARTMENT OF TRANSPORTATION (CDT)
Publication Distribution Unit
1900 Royal Oaks Dr.
Sacramento, CA 95815
Ph: 916-445-3520 or 916-227-7000 (CA Transportation Lab)
Fax: 916-324-8997
Internet: http://www.dot.ca.gov
AOK 5/01
LOK 0/00

STATE OF MARYLAND CODE OF MARYLAND REGULATIONS (COMAR)
1700 Margaret Avenue
Annapolis, MD 21401
phone: 410-974-2486
fax: 410-974-2546
Internet: http://www.sos.state.md.us/sos/dsd/comar/html/comar.html
AOK 8/01
LOK 0/00

STATE OF NORTH CAROLINA ADMINISTRATIVE CODE
Internet: http://www.doa.state.nc.us/PandC/admcode.htm
AOK 6/01
LOK 0/00

STATE OF VIRGINIA ADMINISTRATIVE CODE (VAC)
Virginia Code Commission
General Assembly Building, 2nd Floor
910 Capitol Street
Richmond, Virginia 23219
Phone: 804-786-3591
Fax: 804-692-0625
Internet: http://www.legis.state.va.us/codecomm/codehome.htm
AOK 8/01
LOK 0/00

STATE OF [CALIFORNIA] [WASHINGTON] DEPARTMENT OF AGRICULTURE
AOK 0/00
LOK 0/00

STEEL DECK INSTITUTE (SDI)
P.O. Box 25
Fox River Grove, IL 60021-0025
Ph: 847-462-1930
Fax: 847-462-1940
Internet: http://www.sdi.org
e-mail: Steve@sdi.org
AOK 5/01
LOK 6/00

STEEL DOOR INSTITUTE (SDOI)
30200 Detroit Rd.
Cleveland, OH 44145-1967
Ph: 440-899-0010
Fax: 440-892-1404
Internet: http://www.steeldoor.org
AOK 5/01
LOK 6/00

STEEL JOIST INSTITUTE (SJI)
3127 Tenth Ave., North Ext.
Myrtle Beach, SC 29577-6760
Ph: 843-626-1995
Fax: 843-626-5565
Internet: http://www.steeljoist.org
AOK 5/01
LOK 6/00

STEEL TANK INSTITUTE (STI)
570 Oakwood Rd.
Lake Zurich, IL 60047
Ph: 847-438-8265
Fax: 847-438-8766
Internet: http://www.steeltank.com

AOK 5/01
LOK 6/00

STEEL WINDOW INSTITUTE (SWI)
1300 Sumner Ave.
Cleveland, OH 44115-2851
Ph: 216-241-7333
Fax: 216-241-0105
Internet: http://www.steelwindows.com
AOK 5/01
LOK 6/00

TECHNICAL ASSOCIATION OF THE PULP AND PAPER INDUSTRY (TAPPI)

P.O. Box 105113

Atlanta, GA 30348-5113

PH: 800-322-8686

Internet: http://www.tappi.org

AOK 6/01

LOK 0/00

THE ASSOCIATION OF THE WALL AND CEILING INDUSTRIES - INTERNATIONAL (AWCI)

803 West Broad Street

Falls Church, VA 22046

PH: 703-534-8300

FAX: 703-534-8307

Internet: http://www.awci.org

AOK 6/01

LOK 0/00

NOTE --- Correct organization name does not include "The".

THE INSULATING GLASS MANUFACTURERS ALLIANCE (IGMA)

27 ave Goulburn Avenue

Ottawa, Ontario. CANADA

K1N 8C7

Phone: 613-233-1510

Fax: 613-233-1929

e-mail: info@igmaonline.org

Internet: http://www.igmaonline.org

AOK 9/01

LOK 0/00

NOTE --- Correct organization name does not include "The".

THE SOCIETY FOR PROTECTIVE COATINGS (SSPC)

40 24th Street, 6th Floor
Pittsburgh, PA 15222-4656
Ph: 412-281-2331
Fax: 412-281-9992
Internet: http://www.sspc.org
AOK 5/01
LOK 6/00

TILE COUNCIL OF AMERICA (TCA)
100 Clemson Research Blvd
Anderson, SC 29625
Ph: 864-646-8453
FAX: 864-646-2821
Internet: http://www.tileusa.com
e-mail: literature@tileusa.com
AOK 5/01
LOK 6/00

TRUSS PLATE INSTITUTE (TPI)
583 D'Onofrio Dr., Suite 200
Madison, WI 53719
Ph: 608-833-5900
Fax: 608-833-4360
Internet: None
AOK 5/01
LOK 6/00

TUBULAR EXCHANGER MANUFACTURERS ASSOCIATION (TEMA)
25 N. Broadway
Tarrytown, NY 10591
Ph: 914-332-0040
Fax: 914-332-1541
Internet: http://www.tema.org
AOK 5/01
LOK 6/00

TURFGRASS PRODUCERS INTERNATIONAL (TPI)
1855-A Hicks Road
Rolling Meadows, IL 60008
PH: 800-405-8873
FAX: 847-705-8347
Internet: http://www.turfgrasssod.org
AOK 6/01
LOK 0/00

UNDERWRITERS LABORATORIES (UL)
333 Pfingsten Rd.
Northbrook, IL 60062-2096
Ph: 847-272-8800
Fax: 847-272-8129
Internet: http://www.ul.com/
e-mail: northbrook@us.ul.com
AOK 5/01
LOK 6/00

UNI-BELL PVC PIPE ASSOCIATION (UBPPA)
2655 Villa Creek Dr., Suite 155

Dallas, TX 75234
Ph: 214-243-3902
Fax: 214-243-3907
Internet: http://www.uni-bell.org
e-mail: info@uni-bell.org
AOK 5/01
LOK 6/00

UNIVERSITY OF CALIFORNIA DIVISION OF AGRICULTURE AND NATURAL RESOURCES (UCDANR)
FRANKLIN BUILDING
1111 Franklin St., 6th floor
Oakland, CA 94607-5200
Internet: http://www.danr.ucop.edu
AOK 8/01
LOK 0/00

U.S. AIR FORCE (USAF)
Air Force Publishing Distribution Center
Ph: 410-687-3330
E-mail: afpdc-service@pentagon.af.mil
Internet: http://www.afpubs.hq.af.mil
AOK 11/01
LOK

U.S. ARMY (DA)

U.S. Army Publications Agency

Internet: http://www.usapa.army.mil/

AOK: Publications in electronic media

LOK:

U.S. ARMY CORPS OF ENGINEERS (USACE)

Order CRD-C DOCUMENTS from:

U.S. Army Engineer Waterways Experiment Station

ATTN: Technical Report Distribution Section, Services

Branch, TIC

3909 Halls Ferry Rd.

Vicksburg, MS 39180-6199

Ph: 601-634-2664

Fax: 601-634-2388

Internet: http://www.wes.army.mil/SL/MTC/handbook/handbook.htm

Order Other Documents from:

USACE Publications Depot

Attn: CEIM-SP-D

2803 52nd Avenue

Hyattsville, MD 20781-1102

Ph: 301-394-0081

Fax: 301-394-0084

Internet: http://www.usace.army.mil/publications

or http://www.hnd.usace.army.mil/techinfo/index.htm

AOK 5/01

LOK 6/00

U. S. ARMY EDGEWOOD RESEARCH, DEVELOPMENT, AND ENGINEERING CENTER (EA)

Aberdeen Proving Ground, MD

Internet: Unknown

AOK 11/01

LOK

U.S. ARMY ENVIRONMENTAL CENTER (AEC)

5179 Hoadley Road

Aberdeen Proving Ground, MD 21010-5401

Internet: http://aec.army.mil

AOK 11/01

LOK 0/00

U. S. ARMY ENVIRONMENTAL HYGIENE AGENCY (USAEHA)

Telephone:

FAX:

Internet: None found

AOK 11/01

LOK

U.S. BUREAU OF RECLAMATION (BOR)

Denver Federal Center

P.O. Box 25007

Denver, CO 80225

Ph: 303-445-2080

Internet: http://www.usbr.gov

Order from:

National Technical Information

Services (NTIS)

5285 Port Royal Rd.

Springfield, VA 22161

Ph: 703-605-6000

Fax: 703-605-6900

Internet: http://www.ntis.gov

AOK 5/01

LOK 6/00

U.S. DEFENSE COMMUNICATIONS AGENCY (DCA)

Washington, D.C. 20305-2000

Telephone:

FAX:

Internet: Not found

AOK 11/01

LOK

U.S. DEFENSE INTELLIGENCE AGENCY (DIA)

Defense Intelligence Analysis Center (DIAC)

MacDill Boulevard and Luke Avenue

Bolling AFB, MD

Internet: http://www.dia.mil

AOK 8/01

U.S. DEFENSE LOGISTICS AGENCY (DLA)

Andrew T. McNamara Building

8725 John J. Kingman Road

Fort Belvoir, VA 22060

Internet: http://www.dla.mil

AOK 8/01

U.S. DEPARTMENT OF AGRICULTURE (USDA)

Order AMS Publications from:

AGRICULTURAL MARKETING SERVICE (AMS)

Seed Regulatory and Testing Branch

USDA, AMS, LS Div.

Room 209, Bldg. 306, BARC-East

Beltsville, MD 20705-2325

Ph: 301-504-9430

Fax: 301-504-8098

Internet: http://www.ams.usda.gov/nop/

e-mail: jeri.irwin@usda.gov

Order Other Publications from:

U.S. Department of Agriculture
14th and Independence Ave., SW, Room 4028-S
Washington, DC 20250
Ph: 202-720-2791
Fax: 202-720-2166
Internet: http://www.usda.gov
AOK 5/01
LOK 6/00

U.S. DEPARTMENT OF COMMERCE (DOC)
Order Publications From:
National Technical Information Service
5285 Port Royal Road
Springfield, VA 22161
Ph: 703-605-6000
Fax: 703-605-6900
Internet: http://www.ntis.gov
AOK 5/01
LOK 6/00

U.S. DEPARTMENT OF DEFENSE (DOD)
Order DOD Documents from:
National Technical Information Service
5285 Port Royal Road
Springfield, VA 22161
Ph: 703-605-6000
FAX: 703-605-6900
Internet: http://www.ntis.gov
Order Military Specifications, Standards and Related Publications from:
Department of Defense Single Stock Point for (DODSSP)
Defense Automation and Production Service (DAPS)
Bldg 4D
700 Robbins AV
Philadelphia, PA 19111-5094
Ph: 215-697-2179
Fax: 215-697-1462
Internet: http://www.dodssp.daps.mil
AOK 5/01

LOK 6/00

U.S. DEPARTMENT OF HOUSING AND URBAN DEVELOPMENT (HUD)
Order from:
HUD User
P.O. Box 6091
Rockville, MD 20849
Ph: 800-245-2691
Fax: 301-519-5767
Internet: http://www.huduser.org
e-mail: Huduser@aspensys.com
AOK 5/01
LOK 6/00

U.S. DEPARTMENT OF STATE (SD)

ATTN: DS/PSP/SEP

SA-6, Room 804

Washington, DC 20522-0602

Ph: 703-875-6537

Internet: http://www.state.gov

AOK 5/01

LOK 6/00

U.S. DEPARTMENT OF TRANSPORTATION (DOT)
400 7th Street, SW
Washington, DC 20590
Internet: http://www.dot.gov
AOK 8/01
LOK 0/00

U.S. ENVIRONMENTAL PROTECTION AGENCY (EPA)
Ariel Rios Building
1200 Pennsylvania Avenue, N.W.
Washington, DC 20460
Ph: 202-260-2090
FAX: 202-260-6257
Internet: http://www.epa.gov
NOTE --- Some documents are available only from:
National Technical Information Services (NTIS)
5285 Port Royal Rd.
Springfield, VA 22161
Ph: 703-605-6000
Fax: 703-605-6900
Internet: http://www.ntis.gov
AOK 5/01
LOK 6/00

U.S. FEDERAL AVIATION ADMINISTRATION (FAA)
Order from:
Superintendant of Documents
U. S. Government Printing Office
732 North Capitol Street, NW

Mailstop: SDE
Washington, DC 20401
Ph: 202-512-1530
Fax: 202-512-1262
Internet: http://www.gpo.gov
For free documents, order from:
Federal Aviation Administration
Dept. of Transportation
ATTN: General Services Section M-45
400 Seventh St., SW
Washington, DC 20590-0001
Ph: 202-366-4000
Internet: http://www.dot.gov
AOK 5/01
LOK 6/00

U.S. FEDERAL COMMUNICATIONS COMMISSION (FCC)
445 12th Street SW
Washington, DC 20554
Phone: 888-CALL-FCC
Fax: 202-418-0232
Internet: http://www.fcc.gov
E-mail: fccinfo@fcc.gov
AOK 8/01
LOK 0/00

U.S. FEDERAL EMERGENCY MANAGEMENT AGENCY (FEMA)
500 C Street, SW
Washington, D.C. 20472
Phone: 202-646-4600
Internet: http://www.fema.gov
AOK 8/01
LOK 0/00

U.S. FEDERAL HIGHWAY ADMINISTRATION (FHWA)
Office of Highway Safety (HHS-31)
400 Seventh St., SW
Washington, DC 20590-0001
Ph: 202-366-0411
Fax: 202-366-2249
Internet: http://www.fhwa.dot.gov
Order from:
Superintendant of Documents
U. S. Government Printing Office
732 North Capitol Street, NW
Mailstop: SDE
Washington, DC 20401
Ph: 202-512-1530
Fax: 202-512-1262
Internet: http://www.gpo.gov
AOK 5/01
LOK 6/00

U.S. GENERAL SERVICES ADMINISTRATION (GSA)

Order from:

General Services Administration

Federal Supply Service Bureau

470 E L'Enfant Plaza, S.W., Suite 8100

Washington, DC 20407

Ph: 202-619-8925

Fx: 202-619-8978

Internet: http://www.fss.gsa.gov/pub/fed-specs.cfm

AOK 5/01

LOK 6/00

U.S. NATIONAL AERONAUTICS AND SPACE ADMINISTRATION (NASA)
Internet: http://www.nasa.gov
AOK 11/01
LOK

U.S. NATIONAL ARCHIVES AND RECORDS ADMINISTRATION (NARA)
700 Pennsylvania Avenue, N.W.
Washington, D.C. 20408
Phone: 800-234-8861
Internet: http://www.nara.gov
Order documents from:
Superintendent of Documents
U.S.Government Printing Office
732 North Capitol Street, NW
Washington, DC 20401
Mailstop: SDE
Ph: 202-512-1530
Fax: 202-512-1262
Internet: http://www.gpo.gov
E-mail: gpoaccess@gpo.gov
AOK 5/01

U.S. NAVAL FACILITIES ENGINEERING COMMAND (NAVFAC)
1510 Gilbert St.
Norfolk, VA 23511-2699
Ph: 757-322-4200
Fax: 757-322-4416
Internet: http://www.efdlant.navfac.navy.mil/LANTOPS_15
AOK 5/01
LOK 6/00

U.S. NAVAL FACILITIES ENGINEERING SERVICE CENTER (NFESC)
1100 23rd Avenue
Port Hueneme, CA 93043-4370
Ph: 805-982-4980
Internet: http://www.nfesc.navy.mil
AOK 5/01
LOK 6/00

WATER ENVIRONMENT FEDERATION (WEF)
601 Wythe St.
Alexandria, VA 22314-1994
Ph: 703-684-2452

Fax: 703-684-2492
Internet: http://www.wef.org
AOK 5/01
LOK 6/00

WATER QUALITY ASSOCIATION (WQA)
4151 Naperville Rd.
Lisle, IL 60532
Ph: 630-505-0160
Fax: 630-505-9637
Internet: http://www.wqa.org
e-mail: info@mail.wqa.org
AOK 5/01
LOK 6/00

WEST COAST LUMBER INSPECTION BUREAU (WCLIB)
P.O. Box 23145
Portland, OR 97281
Ph: 503-639-0651
Fax: 503-684-8928
Internet: http://www.wclib.org
e-mail: info@wclib.org
AOK 5/01
LOK 6/00

WESTERN WOOD PRESERVERS INSTITUTE (WWPI)
7017 N.E. Highway 99 # 108
Vancover, WA 98665
Ph: 360-693-9958
Fax: 360-693-9967
Internet: http://www.wwpinstitute.org
e-mail: wwpi@teleport.com
AOK 5/01
LOK 6/00

WESTERN WOOD PRODUCTS ASSOCIATION (WWPA)
Yeon Bldg.
522 SW 5th Ave.
Suite 500
Portland, OR 97204-2122
Ph: 503-224-3930
Fax: 503-224-3934
Internet: http://www.wwpa.org
e-mail: info@wwpa.org
AOK 5/01
LOK 6/00

WINDOW AND DOOR MANUFACTURERS ASSOCIATION (WDMA)
1400 East Touhy Ave., Suite 470
Des Plaines, IL 60018
Ph: 847-299-5200 or 800-223-2301
Fax: 708-299-1286
Internet: http://www.wdma.com
e-mail: admin@wdma.com
AOK 5/01
LOK 6/00

WOOD MOULDING AND MILLWORK PRODUCERS ASSOCIATION (WMMPA)
507 First Street
Woodland, CA 95695
Ph: 916-661-9591
Fax: 916-661-9586
Internet: http://www.wmmpa.com
AOK 5/01
LOK 6/00

-- End of Section --

SECTION TABLE OF CONTENTS

DIVISION 01 - GENERAL REQUIREMENTS

SECTION 01451A

CONTRACTOR QUALITY CONTROL

05/02

PART 1 GENERAL

1.1 REFERENCES
1.2 PAYMENT

PART 2 PRODUCTS (Not Applicable)

PART 3 EXECUTION

3.1 GENERAL REQUIREMENTS
3.2 QUALITY CONTROL PLAN
3.2.1 Content of the CQC Plan
3.2.2 Additional Requirements for Design Quality Control (DQC) Plan
3.2.3 Acceptance of Plan
3.2.4 Notification of Changes
3.3 COORDINATION MEETING
3.4 QUALITY CONTROL ORGANIZATION
3.4.1 Personnel Requirements
3.4.2 CQC System Manager
3.4.3 CQC Personnel
3.4.4 Additional Requirement
3.4.5 Organizational Changes
3.5 SUBMITTALS AND DELIVERABLES
3.6 CONTROL
3.6.1 Preparatory Phase
3.6.2 Initial Phase
3.6.3 Follow-up Phase
3.6.4 Additional Preparatory and Initial Phases
3.7 TESTS
3.7.1 Testing Procedure
3.7.2 Testing Laboratories
3.7.2.1 Capability Check
3.7.2.2 Capability Recheck
3.7.3 Onsite Laboratory
3.7.4 Furnishing or Transportation of Samples for Testing
3.8 COMPLETION INSPECTION
3.8.1 Punch-Out Inspection
3.8.2 Pre-Final Inspection
3.8.3 Final Acceptance Inspection
3.9 DOCUMENTATION
3.10 SAMPLE FORMS
3.11 NOTIFICATION OF NONCOMPLIANCE

-- End of Section Table of Contents --

UFGS-01451A (May 2002)

SECTION 01451A

CONTRACTOR QUALITY CONTROL
05/02

PART 1 GENERAL

1.1 REFERENCES

The publications listed below form a part of this specification to the extent referenced. The publications are referred to in the text by basic designation only.

AMERICAN SOCIETY FOR TESTING AND MATERIALS (ASTM)

ASTM D 3740	(2001) Minimum Requirements for Agencies Engaged in the Testing and/or Inspection of Soil and Rock as Used in Engineering Design and Construction
ASTM E 329	(2000b) Agencies Engaged in the Testing and/or Inspection of Materials Used in Construction

1.2 PAYMENT

Separate payment will not be made for providing and maintaining an effective Quality Control program, and all costs associated therewith shall be included in the applicable unit prices or lump-sum prices contained in the Bidding Schedule.

PART 2 PRODUCTS (Not Applicable)

PART 3 EXECUTION

3.1 GENERAL REQUIREMENTS

The Contractor is responsible for quality control and shall establish and maintain an effective quality control system in compliance with the Contract Clause titled "Inspection of Construction." The quality control system shall consist of plans, procedures, and organization necessary to produce an end product which complies with the contract requirements. The system shall cover all construction design and construction operations, both onsite and offsite, and shall be keyed to the proposed construction sequence. The site project superintendent will be held responsible for the quality of work on the job and is subject to removal by the Contracting Officer for non-compliance with the quality requirements specified in the contract. The site project superintendent in this context shall be the highest level manager responsible for the overall construction activities at the site, including quality and production. The site project superintendent shall maintain a physical presence at the site at all times, except as otherwise acceptable to the Contracting Officer, and shall be responsible for all construction and construction related activities at the site.

3.2 QUALITY CONTROL PLAN

The Contractor shall furnish for review by the Government, not later than 5 days after receipt of notice to proceed, the Contractor Quality Control (CQC) Plan proposed to implement the requirements of the Contract Clause titled "Inspection of Construction." The plan shall identify personnel, procedures, control, instructions, tests, records, and forms to be used. The Government will consider an interim plan for the first 30 days of operation. ConstructionDesign and construction will be permitted to begin only after acceptance of the CQC Plan or acceptance of an interim plan applicable to the particular feature of work to be started. Work outside of the features of work included in an accepted interim plan will not be permitted to begin until acceptance of a CQC Plan or another interim plan containing the additional features of work to be started.

3.2.1 Content of the CQC Plan

The CQC Plan shall include, as a minimum, the following to cover all design and constructionconstruction operations, both onsite and offsite, including work by subcontractors, fabricators, suppliers, and purchasing agents subcontractors, designers of record, consultants, architect/engineers (AE), fabricators, suppliers, and purchasing agents:

a. A description of the quality control organization, including a chart showing lines of authority and acknowledgment that the CQC staff shall implement the three phase control system for all aspects of the work specified. The staff shall include a CQC System Manager who shall report to the project superintendent.

b. The name, qualifications (in resume format), duties, responsibilities, and authorities of each person assigned a CQC function.

c. A copy of the letter to the CQC System Manager signed by an authorized official of the firm which describes the responsibilities and delegates sufficient authorities to adequately perform the functions of the CQC System Manager, including authority to stop work which is not in compliance with the contract. The CQC System Manager shall issue letters of direction to all other various quality control representatives outlining duties, authorities, and responsibilities. Copies of these letters shall also be furnished to the Government.

d. Procedures for scheduling, reviewing, certifying, and managing submittals, including those of subcontractors, offsite fabricators, suppliers, and purchasing agentssubcontractors, designers of record, consultants, architect engineers (AE), offsite fabricators, suppliers, and purchasing agents. These procedures shall be in accordance with Section 01330 SUBMITTAL PROCEDURES.

e. Control, verification, and acceptance testing procedures for each specific test to include the test name, specification paragraph requiring test, feature of work to be tested, test frequency, and person responsible for each test. (Laboratory facilities must be approved by the Contracting Officer.)

f. Procedures for tracking preparatory, initial, and follow-up

control phases and control, verification, and acceptance tests including documentation.

g. Procedures for tracking constructiondesign and construction deficiencies from identification through acceptable corrective action. These procedures shall establish verification that identified deficiencies have been corrected.

h. Reporting procedures, including proposed reporting formats.

i. A list of the definable features of work. A definable feature of work is a task which is separate and distinct from other tasks, has separate control requirements, and may be identified by different trades or disciplines, or it may be work by the same trade in a different environment. Although each section of the specifications may generally be considered as a definable feature of work, there are frequently more than one definable features under a particular section. This list will be agreed upon during the coordination meeting.

3.2.2 Additional Requirements for Design Quality Control (DQC) Plan

The following additional requirements apply to the Design Quality Control (DQC) plan:

(1) The Contractor's QCP Plan shall provide and maintain a Design Quality Control (DQC) Plan as an effective quality control program which will assure that all services required by this design-build contract are performed and provided in a manner that meets professional architectural and engineering quality standards. As a minimum, all documents shall be technically reviewed by competent, independent reviewers identified in the DQC Plan. The same element that produced the product shall not perform the independent technical review (ITR). In addition, the DQC Plan shall incorporate the Lessons Learned Databases provided by the Government. The Contractor shall correct errors and deficiencies in the design documents prior to submitting them to the Government.

(2) The Contractor shall include the design schedule in the master project schedule, showing the sequence of events involved in carrying out the project design tasks within the specific contract period. This should be at a detailed level of scheduling sufficient to identify all major design tasks, including those that control the flow of work. The schedule shall include review and correction periods associated with each item. This should be a forward planning as well as a project monitoring tool. The schedule reflects calendar days and not dates for each activity. If the schedule is changed, the Contractor shall submit a revised schedule reflecting the change within 7 calendar days. The Contractor shall include in the DQC Plan the discipline-specific checklists to be used during the design and quality control of each submittal. These completed checklists shall be submitted at each design phase as part of the project documentation. Example checklists can be found in ER 1110-1-12.

(3) The DQC Plan shall be implemented by an Design Quality Control Manager who has the responsibility of being cognizant of

and assuring that all documents on the project have been coordinated. This individual shall be a person who has verifiable engineering or architectural design experience and is a registered professional engineer or architect. The Contractor shall notify the Contracting Officer, in writing, of the name of the individual, and the name of an alternate person assigned to the position.

The Contracting Officer will notify the Contractor in writing of the acceptance of the DQC Plan. After acceptance, any changes proposed by the Contractor are subject to the acceptance of the Contracting Officer.

3.2.3 Acceptance of Plan

Acceptance of the Contractor's plan is required prior to the start of constructiondesign and construction. Acceptance is conditional and will be predicated on satisfactory performance during the constructiondesign and construction. The Government reserves the right to require the Contractor to make changes in his CQC Plan and operations including removal of personnel, as necessary, to obtain the quality specified.

3.2.4 Notification of Changes

After acceptance of the CQC Plan, the Contractor shall notify the Contracting Officer in writing of any proposed change. Proposed changes are subject to acceptance by the Contracting Officer.

3.3 COORDINATION MEETING

After the Preconstruction Conference, before start of construction, Postaward Conference, before start of design or construction, and prior to acceptance by the Government of the CQC Plan, the Contractor shall meet with the Contracting Officer or Authorized Representative and discuss the Contractor's quality control system. The CQC Plan shall be submitted for review a minimum of 7 calendar days prior to the Coordination Meeting. During the meeting, a mutual understanding of the system details shall be developed, including the forms for recording the CQC operations, design activities, control activities, testing, administration of the system for both onsite and offsite work, and the interrelationship of Contractor's Management and control with the Government's Quality Assurance. Minutes of the meeting shall be prepared by the Government and signed by both the Contractor and the Contracting Officer. The minutes shall become a part of the contract file. There may be occasions when subsequent conferences will be called by either party to reconfirm mutual understandings and/or address deficiencies in the CQC system or procedures which may require corrective action by the Contractor.

3.4 QUALITY CONTROL ORGANIZATION

3.4.1 Personnel Requirements

The requirements for the CQC organization are a CQC System Manager, a Design Quality Manager, and sufficient number of additional qualified personnel to ensure safety and contract compliance. The Safety and Health Manager shall receive direction and authority from the CQC System Manager and shall serve as a member of the CQC staff. Personnel identified in the technical provisions as requiring specialized skills to assure the required work is being performed properly will also be included as part of the CQC

organization.The Contractor's CQC staff shall maintain a presence at the site at all times during progress of the work and have complete authority and responsibility to take any action necessary to ensure contract compliance. The CQC staff shall be subject to acceptance by the Contracting Officer. The Contractor shall provide adequate office space, filing systems and other resources as necessary to maintain an effective and fully functional CQC organization. Complete records of all letters, material submittals, show drawing submittals, schedules and all other project documentation shall be promptly furnished to the CQC organization by the Contractor. The CQC organization shall be responsible to maintain these documents and records at the site at all times, except as otherwise acceptable to the Contracting Officer.

3.4.2 CQC System Manager

The Contractor shall identify as CQC System Manager an individual within the onsite work organization who shall be responsible for overall management of CQC and have the authority to act in all CQC matters for the Contractor. The CQC System Manager shall be a graduate engineer, graduate architect, or a graduate of construction management, with a minimum of 10 years' construction experience on construction similar to this contract. This CQC System Manager shall be on the site at all times during construction and shall be employed by the prime Contractor. The CQC System Manager shall be assigned no other duties. An alternate for the CQC System Manager shall be identified in the plan to serve in the event of the System Manager's absence. The requirements for the alternate shall be the same as for the designated CQC System Manager.

3.4.3 CQC Personnel

In addition to CQC personnel specified elsewhere in the contract, the Contractor shall provide as part of the CQC organization specialized personnel to assist the CQC System Manager for the following areas: electrical, mechanical, structural. These individuals shall be directly employed by the prime Contractor and may not be employed by a supplier or sub-contractor on this project; be responsible to the CQC System Manager; be physically present at the construction site during work on their areas of responsibility; have the necessary education and/or experience in accordance with the experience matrix listed herein. These individuals shall have no other duties other than quality control.

Experience Matrix

	Area	Qualifications
a.	Mechanical	Graduate Mechanical Engineer with 10 years' related experience
b.	Electrical	Graduate Electrical Engineer with 10 years' related field experience
c.	Structural	Graduate Structural Engineer with 10 years' related field experience

3.4.4 Additional Requirement

In addition to the above experience and education requirements the CQC System Manager shall have completed the course entitled "Construction Quality Management For Contractors". This course is offered on a quarterly basis within the Savannah District boundaries. CQC System Managers who have not successfully completed this course must attend the next available training session. Failure to successfully complete this training within the next available training date will be grounds for removal as CQC System Manager. There is currently a nominal fee to cover the cost of the training materials for Contractors who have current contracts with the Savannah District.

3.4.5 Organizational Changes

The Contractor shall maintain the CQC staff at full strength at all times. When it is necessary to make changes to the CQC staff, the Contractor shall revise the CQC Plan to reflect the changes and submit the changes to the Contracting Officer for acceptance.

3.5 SUBMITTALS AND DELIVERABLES

Submittals, if needed, shall be made as specified in Section 01330 SUBMITTAL PROCEDURES. The CQC organization shall be responsible for certifying that all submittals and deliverables are in compliance with the contract requirements. When Section 15950A HEATING, VENTILATING AND AIR CONDITIONING (HVAC) CONTROL SYSTEMS; 15951A DIRECT DIGITAL CONTROL FOR HVAC; 15990A TESTING, ADJUSTING, AND BALANCING OF HVAC SYSTEMS; or 15995A COMMISSIONING OF HVAC SYSTEMS are included in the contract, the submittals required by those sections shall be coordinated with Section 01330 SUBMITTAL PROCEDURES to ensure adequate time is allowed for each type of submittal required.

3.6 CONTROL

Contractor Quality Control is the means by which the Contractor ensures that the construction, to include that of subcontractors and suppliers, complies with the requirements of the contract. At least three phases of control shall be conducted by the CQC System Manager for each definable feature of the construction work as follows:

3.6.1 Preparatory Phase

This phase shall be performed prior to beginning work on each definable feature of work, after all required plans/documents/materials are approved/accepted, and after copies are at the work site. This phase shall include:

a. A review of each paragraph of applicable specifications, reference codes, and standards. A copy of those sections of referenced codes and standards applicable to that portion of the work to be accomplished in the field shall be made available by the Contractor at the preparatory inspection. These copies shall be maintained in the field and available for use by Government personnel until final acceptance of the work.

b. A review of the contract drawings.

c. A check to assure that all materials and/or equipment have been tested, submitted, and approved.

d. Review of provisions that have been made to provide required control inspection and testing.

e. Examination of the work area to assure that all required preliminary work has been completed and is in compliance with the contract.

f. A physical examination of required materials, equipment, and sample work to assure that they are on hand, conform to approved shop drawings or submitted data, and are properly stored.

g. A review of the appropriate activity hazard analysis to assure safety requirements are met.

h. Discussion of procedures for controlling quality of the work including repetitive deficiencies. Document construction tolerances and workmanship standards for that feature of work.

i. A check to ensure that the portion of the plan for the work to be performed has been accepted by the Contracting Officer.

j. Discussion of the initial control phase.

k. The Government shall be notified at least 48 hours in advance of beginning the preparatory control phase. This phase shall include a meeting conducted by the CQC System Manager and attended by the superintendent, other CQC personnel (as applicable), and the foreman responsible for the definable feature. The results of the preparatory phase actions shall be documented by separate minutes prepared by the CQC System Manager and attached to the daily CQC report. The Contractor shall instruct applicable workers as to the acceptable level of workmanship required in order to meet contract specifications.

3.6.2 Initial Phase

This phase shall be accomplished at the beginning of a definable feature of work. The following shall be accomplished:

a. A check of work to ensure that it is in full compliance with contract requirements. Review minutes of the preparatory meeting.

b. Verify adequacy of controls to ensure full contract compliance. Verify required control inspection and testing.

c. Establish level of workmanship and verify that it meets minimum acceptable workmanship standards. Compare with required sample panels as appropriate.

d. Resolve all differences.

e. Check safety to include compliance with and upgrading of the safety plan and activity hazard analysis. Review the activity analysis with each worker.

f. The Government shall be notified at least 24 hours in advance of beginning the initial phase. Separate minutes of this phase shall be prepared by the CQC System Manager and attached to the daily

CQC report. Exact location of initial phase shall be indicated for future reference and comparison with follow-up phases.

g. The initial phase should be repeated for each new crew to work onsite, or any time acceptable specified quality standards are not being met.

3.6.3 Follow-up Phase

Daily checks shall be performed to assure control activities, including control testing, are providing continued compliance with contract requirements, until completion of the particular feature of work. The checks shall be made a matter of record in the CQC documentation. Final follow-up checks shall be conducted and all deficiencies corrected prior to the start of additional features of work which may be affected by the deficient work. The Contractor shall not build upon nor conceal non-conforming work.

3.6.4 Additional Preparatory and Initial Phases

Additional preparatory and initial phases shall be conducted on the same definable features of work if: the quality of on-going work is unacceptable; if there are changes in the applicable CQC staff, onsite production supervision or work crew; if work on a definable feature is resumed after a substantial period of inactivity; or if other problems develop.

3.7 TESTS

3.7.1 Testing Procedure

The Contractor shall perform specified or required tests to verify that control measures are adequate to provide a product which conforms to contract requirements. Upon request, the Contractor shall furnish to the Government duplicate samples of test specimens for possible testing by the Government. Testing includes operation and/or acceptance tests when specified. The Contractor shall procure the services of a Corps of Engineers approved testing laboratory or establish an approved testing laboratory at the project site. The Contractor shall perform the following activities and record and provide the following data:

a. Verify that testing procedures comply with contract requirements.

b. Verify that facilities and testing equipment are available and comply with testing standards.

c. Check test instrument calibration data against certified standards.

d. Verify that recording forms and test identification control number system, including all of the test documentation requirements, have been prepared.

e. Results of all tests taken, both passing and failing tests, shall be recorded on the CQC report for the date taken. Specification paragraph reference, location where tests were taken, and the sequential control number identifying the test shall be given. If approved by the Contracting Officer, actual test reports may be submitted later with a reference to the test number and date taken. An information copy of tests performed by an offsite or

commercial test facility shall be provided directly to the Contracting Officer. Failure to submit timely test reports as stated may result in nonpayment for related work performed and disapproval of the test facility for this contract.

3.7.2 Testing Laboratories

3.7.2.1 Capability Check

The Government reserves the right to check laboratory equipment in the proposed laboratory for compliance with the standards set forth in the contract specifications and to check the laboratory technician's testing procedures and techniques. Laboratories utilized for testing soils, concrete, asphalt, and steel shall meet criteria detailed in ASTM D 3740 and ASTM E 329.

3.7.2.2 Capability Recheck

If the selected laboratory fails the capability check, the Contractor will be assessed a charge to reimburse the Government for each succeeding recheck of the laboratory or the checking of a subsequently selected laboratory. Such costs will be deducted from the contract amount due the Contractor.

3.7.3 Onsite Laboratory

The Government reserves the right to utilize the Contractor's control testing laboratory and equipment to make assurance tests, and to check the Contractor's testing procedures, techniques, and test results at no additional cost to the Government.

3.7.4 Furnishing or Transportation of Samples for Testing

Costs incidental to the transportation of samples or materials shall be borne by the Contractor. Samples of materials for test verification and acceptance testing by the Government shall be delivered to the following address:

US Army Engineer District, Savannah
Environmental & Materials Unit
200 North Cobb Parkway
Building 400, Suite 404
Marietta, GA 30062

Coordination for each specific test will be made through the Area Office.

3.8 COMPLETION INSPECTION

3.8.1 Punch-Out Inspection

Near the end of the work, or any increment of the work established by a time stated in the Special Clause, "Commencement, Prosecution, and Completion of Work", or by the specifications, the CQC Manager shall conduct an inspection of the work. A punch list of items which do not conform to the approved drawings and specifications shall be prepared and included in the CQC documentation, as required by paragraph DOCUMENTATION. The list of deficiencies shall include the estimated date by which the deficiencies will be corrected. The CQC System Manager or staff shall make a second inspection to ascertain that all deficiencies have been corrected.

Once this is accomplished, the Contractor shall notify the Government that the facility is ready for the Government Pre-Final inspection.

3.8.2 Pre-Final Inspection

The Government will perform the pre-final inspection to verify that the facility is complete and ready to be occupied. A Government Pre-Final Punch List may be developed as a result of this inspection. The Contractor's CQC System Manager shall ensure that all items on this list have been corrected before notifying the Government, so that a Final inspection with the customer can be scheduled. Any items noted on the Pre-Final inspection shall be corrected in a timely manner. These inspections and any deficiency corrections required by this paragraph shall be accomplished within the time slated for completion of the entire work or any particular increment of the work if the project is divided into increments by separate completion dates.

3.8.3 Final Acceptance Inspection

The Contractor's Quality Control Inspection personnel, plus the superintendent or other primary management person, and the Contracting Officer's Representative shall be in attendance at the final acceptance inspection. Additional Government personnel including, but not limited to, those from Base/Post Civil Facility Engineer user groups, and major commands may also be in attendance. The final acceptance inspection will be formally scheduled by the Contracting Officer based upon results of the Pre-Final inspection. Notice shall be given to the Contracting Officer at least 14 days prior to the final acceptance inspection and shall include the Contractor's assurance that all specific items previously identified to the Contractor as being unacceptable, along with all remaining work performed under the contract, will be complete and acceptable by the date scheduled for the final acceptance inspection. Failure of the Contractor to have all contract work acceptably complete for this inspection will be cause for the Contracting Officer to bill the Contractor for the Government's additional inspection cost in accordance with the contract clause titled "Inspection of Construction".

3.9 DOCUMENTATION

The Contractor shall maintain current records providing factual evidence that required quality control activities and/or tests have been performed. These records shall include the work of subcontractors and suppliers and shall be on an acceptable form that includes, as a minimum, the following information:

a. Contractor/subcontractor and their area of responsibility.

b. Operating plant/equipment with hours worked, idle, or down for repair.

c. Work performed each day, giving location, description, and by whom. When Network Analysis (NAS) is used, identify each phase of work performed each day by NAS activity number.

d. Test and/or control activities performed with results and references to specifications/drawings requirements. The control phase shall be identified (Preparatory, Initial, Follow-up). List of deficiencies noted, along with corrective action.

e. Quantity of materials received at the site with statement as to acceptability, storage, and reference to specifications/drawings requirements.

f. Submittals and deliverables reviewed, with contract reference, by whom, and action taken.

g. Offsite surveillance activities, including actions taken.

h. Job safety evaluations stating what was checked, results, and instructions or corrective actions.

i. Instructions given/received and conflicts in plans and/or specifications.

j. Contractor's verification statement.

These records shall indicate a description of trades working on the project; the number of personnel working; weather conditions encountered; and any delays encountered. These records shall cover both conforming and deficient features and shall include a statement that equipment and materials incorporated in the work and workmanship comply with the contract. The original and one copy of these records in report form shall be furnished to the Government daily within 24 hours after the date covered by the report, except that reports need not be submitted for days on which no work is performed. As a minimum, one report shall be prepared and submitted for every 7 days of no work and on the last day of a no work period. All calendar days shall be accounted for throughout the life of the contract. The first report following a day of no work shall be for that day only. Reports shall be signed and dated by the CQC System Manager. The report from the CQC System Manager shall include copies of test reports and copies of reports prepared by all subordinate quality control personnel.

3.10 SAMPLE FORMS

Sample forms are included in Attachment 1 to Section 00800.

3.11 NOTIFICATION OF NONCOMPLIANCE

The Contracting Officer will notify the Contractor of any detected noncompliance with the foregoing requirements. The Contractor shall take immediate corrective action after receipt of such notice. Such notice, when delivered to the Contractor at the work site, shall be deemed sufficient for the purpose of notification. If the Contractor fails or refuses to comply promptly, the Contracting Officer may issue an order stopping all or part of the work until satisfactory corrective action has been taken. No part of the time lost due to such stop orders shall be made the subject of claim for extension of time or for excess costs or damages by the Contractor.

-- End of Section --

SECTION TABLE OF CONTENTS

DIVISION 01 - GENERAL REQUIREMENTS

SECTION 01500

TEMPORARY CONSTRUCTION FACILITIES

02/97

PART 1 GENERAL

1.1 GENERAL REQUIREMENTS
1.1.1 Site Plan
1.1.2 Identification of Employees
1.1.3 Employee Parking
1.2 AVAILABILITY AND USE OF UTILITY SERVICES
1.2.1 Payment for Utility Services
1.2.2 Meters and Temporary Connections
1.2.3 Advance Deposit
1.2.4 Final Meter Reading
1.2.5 Sanitation
1.2.6 Telephone
1.3 BULLETIN BOARD, PROJECT SIGN, AND PROJECT SAFETY SIGN
1.3.1 Bulletin Board
1.3.2 Project Signs
1.4 PROTECTION AND MAINTENANCE OF TRAFFIC
1.4.1 Haul Roads
1.4.2 Barricades
1.5 CONTRACTOR'S TEMPORARY FACILITIES
1.5.1 Administrative Field Offices
1.5.2 Storage Area
1.5.3 Supplemental Storage Area
1.5.4 Appearance of Trailers
1.5.5 Maintenance of Storage Area
1.5.6 New Building
1.5.7 Security Provisions
1.6 PLANT COMMUNICATION
1.7 TEMPORARY PROJECT SAFETY FENCING
1.8 INSTALLATION REGULATIONS
1.9 TESTING LABORATORIES
1.9.1 Approved Testing Laboratories
1.9.2 Other Laboratory Services
1.10 CONSTRUCTION SCHEDULE RESTRAINTS - ROBINS AFB, GA
1.10.1 Occupancy
1.10.2 Disposal of Waste/Excess Material
1.10.3 Use of Radios
1.10.4 Contractor Entry and Exit Procedures
1.10.4.1 Entry
1.10.4.2 Contractor Vehicles
1.10.4.3 AFMC Form 496
1.10.4.4 Identification Cards
1.10.4.5 Credentials
1.10.5 Cutting of Roads and Streets
1.10.6 Storage Areas
1.10.6.1 Storage
1.10.6.2 Security
1.10.7 Adverse Weather Data Forms

1.10.8 Time of Performance
1.10.9 Outages
1.10.10 Continuity
1.11 REQUEST FOR INFORMATION (RFI) SYSTEM
1.12 PROGRESS PHOTOGRAPHS
1.13 CLEANUP
1.14 RESTORATION OF STORAGE AREA

PART 2 PRODUCTS (NOT APPLICABLE)

PART 3 EXECUTION (NOT APPLICABLE)

-- End of Section Table of Contents --

CEGS-01500/S (February 1997)

SECTION 01500

TEMPORARY CONSTRUCTION FACILITIES
02/97

PART 1 GENERAL

1.1 GENERAL REQUIREMENTS

1.1.1 Site Plan

The Contractor use that area indicated on the plans or shall prepare a site plan indicating the proposed location and dimensions of any area to be fenced and used by the Contractor, the number of trailers to be used, avenues of ingress/egress to the fenced area and details of the fence installation. Any areas which may have to be graveled to prevent the tracking of mud shall also be identified. The Contractor shall also indicate if the use of a supplemental or other staging area is desired.

1.1.2 Identification of Employees

The Contractor shall be responsible for furnishing to each employee, and for requiring each employee engaged on the work to display, identification as approved and directed by the Contracting Officer. Prescribed identification shall immediately be delivered to the Contracting Officer for cancellation upon release of any employee. When required, the Contractor shall obtain and provide fingerprints of persons employed on the project. Contractor and subcontractor personnel shall wear identifying markings on hard hats clearly identifying the company for whom the employee works.

1.1.3 Employee Parking

Contractor employees shall park privately owned vehicles in an area designated by the Contracting Officer. This area will be within reasonable walking distance of the construction site. Contractor employee parking shall not interfere with existing and established parking requirements of the military installation.

1.2 AVAILABILITY AND USE OF UTILITY SERVICES

1.2.1 Payment for Utility Services

The Government will make all reasonably required utilities available to the Contractor from existing outlets and supplies, as specified in the contract. Unless otherwise provided in the contract, the amount of each utility service consumed shall be charged to or paid for by the Contractor at prevailing rates charged to the Government or, where the utility is produced by the Government, at reasonable rates determined by the Contracting Officer. The Contractor shall carefully conserve any utilities furnished without charge.

1.2.2 Meters and Temporary Connections

The Contractor, at its expense and in a manner satisfactory to the Contracting Officer, shall provide and maintain necessary temporary

connections, distribution lines, and meter bases (Government will provide meters) required to measure the amount of each utility used for the purpose of determining charges. The Contractor shall notify the Contracting Officer, in writing, 5 working days before final electrical connection is desired so that a utilities contract can be established. The Government will provide a meter and make the final hot connection after inspection and approval of the Contractor's temporary wiring installation. The Contractor shall not make the final electrical connection.

1.2.3 Advance Deposit

An advance deposit for utilities consisting of an estimated month's usage or a minimum of $50.00 will be required. The last monthly bills for the fiscal year will normally be offset by the deposit and adjustments will be billed or returned as appropriate. Services to be rendered for the next fiscal year, beginning 1 October, will require a new deposit. Notification of the due date for this deposit will be mailed to the Contractor prior to the end of the current fiscal year.

1.2.4 Final Meter Reading

Before completion of the work and final acceptance of the work by the Government, the Contractor shall notify the Contracting Officer, in writing, 5 working days before termination is desired. The Government will take a final meter reading, disconnect service, and remove the meters. The Contractor shall then remove all the temporary distribution lines, meter bases, and associated paraphernalia. The Contractor shall pay all outstanding utility bills before final acceptance of the work by the Government.

1.2.5 Sanitation

The Contractor shall provide and maintain within the construction area minimum field-type sanitary facilities approved by the Contracting Officer. Government toilet facilities will not be available to Contractor's personnel.

1.2.6 Telephone

The Contractor shall make arrangements and pay all costs for telephone facilities desired.

1.3 BULLETIN BOARD, PROJECT SIGN, AND PROJECT SAFETY SIGN

1.3.1 Bulletin Board

Immediately upon beginning of work, the Contractor shall provide a weatherproof glass-covered bulletin board not less than 915 by 1220 mm in size for displaying the Equal Employment Opportunity poster, a copy of the wage decision contained in the contract, Wage Rate Information poster, and other information approved by the Contracting Officer. The bulletin board shall be located at the project site in a conspicuous place easily accessible to all employees, as approved by the Contracting Officer. Legible copies of the aforementioned data shall be displayed until work is completed. Upon completion of work the bulletin board shall be removed by and remain the property of the Contractor.

1.3.2 Project Signs

The Contractor shall furnish and erect a project sign in the location as selected by the Contracting Officer. Details of construction shall be as shown on sketches included in Attachment 1 to Section 00800. The sign shall be constructed of 1/2 inch thick (or metric equivalent), grade A-C, exterior type plywood. The sign shall receive one coat primer paint followed by two coats brown color paint in accordance with Fed. Std. 595a, Color No. 20100 semigloss exterior type enamel. Lettering must be white gloss exterior type enamel (Fed. Std. 595a, Color No. 37875). Windows and door of the Castle and logo background shall be painted white (Fed. Std. 595a, Color No. 37875). The Castle and inner border line shall be brown (Fed. Std. 595a, Color No. 20100). Upon completion of work under this contract, the project sign shall be removed from the job site and shall remain the property of the Contractor.

The Engineering and Services Directorate emblem (AFVA 85-3) may be acquired by sending a letter; a completed DD Form 1149, Requisition and Invoice/Shipping Document; or a DA Form 17, Requisition for Publications (Army customers) to:

The Air Force Publishing Distribution Center
2800 Eastern Boulevard
Baltimore, MD 21220-2898

1.4 PROTECTION AND MAINTENANCE OF TRAFFIC

During construction the Contractor shall provide access and temporary relocated roads as necessary to maintain traffic. The Contractor shall maintain and protect traffic on all affected roads during the construction period except as otherwise specifically directed by the Contracting Officer. Measures for the protection and diversion of traffic, including the provision of watchmen and flagmen, erection of barricades, placing of lights around and in front of equipment and the work, and the erection and maintenance of adequate warning, danger, and direction signs, shall be as required by the State and local authorities having jurisdiction. The traveling public shall be protected from damage to person and property. The Contractor's traffic on roads selected for hauling material to and from the site shall interfere as little as possible with public traffic. The Contractor shall investigate the adequacy of existing roads and the allowable load limit on these roads. The Contractor shall be responsible for the repair of any damage to roads caused by construction operations.

1.4.1 Haul Roads

The Contractor will be required to use the haul routes shown on the plans unless otherwise permitted in writing by the Contracting Officer. When haul routes are not designated on the plans, the Contractor must obtain approval of the Contracting Officer of haul routes he intends to use. The Contractor shall maintain the haul routes and shall keep the dust problem under control by wetting the surface as needed. Sweeping and cleaning of pavements will be done as necessary to remove spillage resulting from the hauling operations. After all hauling has been completed, the Contractor shall restore the earth areas used for the haul routes to original condition by final grading, shaping, compacting, and grassing, and shall clean and sweep all paved areas as required. Any pavement damaged as a result of hauling operations under this contract for both the earth and other materials shall be promptly repaired by the Contractor, as approved by the Contracting Officer. The cost of maintenance and repair of the haul routes, as mentioned above, shall be considered as a subsidiary obligation of the Contractor. The axle load of earth hauling equipment operating on

paved streets shall not exceed 18,000 pounds.

1.4.2 Barricades

The Contractor shall erect and maintain temporary barricades to limit public access to hazardous areas. Such barricades shall be required whenever safe public access to paved areas such as roads, parking areas or sidewalks is prevented by construction activities or as otherwise necessary to ensure the safety of both pedestrian and vehicular traffic. Barricades shall be securely placed, clearly visible with adequate illumination to provide sufficient visual warning of the hazard during both day and night.

1.5 CONTRACTOR'S TEMPORARY FACILITIES

1.5.1 Administrative Field Offices

The Contractor shall provide and maintain administrative field office facilities within the construction area at the designated site. Government office and warehouse facilities will not be available to the Contractor's personnel.

1.5.2 Storage Area

The Contractor shall construct a temporary 1.8 m high chain link fence around trailers and materials. The fence shall include plastic strip inserts, colored brown, so that visibility through the fence is obstructed. Fence posts may be driven, in lieu of concrete bases, where soil conditions permit. Trailers, materials, or equipment shall not be placed or stored outside the fenced area unless such trailers, materials, or equipment are assigned a separate and distinct storage area by the Contracting Officer away from the vicinity of the construction site but within the military boundaries. Trailers, equipment, or materials shall not be open to public view with the exception of those items which are in support of ongoing work on any given day. Materials shall not be stockpiled outside the fence in preparation for the next day's work. Mobile equipment, such as tractors, wheeled lifting equipment, cranes, trucks, and like equipment, shall be parked within the fenced area at the end of each work day.

1.5.3 Supplemental Storage Area

Upon Contractor's request, the Contracting Officer will designate another or supplemental area for the Contractor's use and storage of trailers, equipment, and materials. This area may not be in close proximity of the construction site but shall be within the military boundaries. Fencing of materials or equipment will not be required at this site; however, the Contractor shall be responsible for cleanliness and orderliness of the area used and for the security of any material or equipment stored in this area. Utilities will not be provided to this area by the Government.

1.5.4 Appearance of Trailers

Trailers utilized by the Contractor for administrative or material storage purposes shall present a clean and neat exterior appearance and shall be in a state of good repair. Trailers which, in the opinion of the Contracting Officer, require exterior painting or maintenance will not be allowed on the military property.

1.5.5 Maintenance of Storage Area

Fencing shall be kept in a state of good repair and proper alignment. Should the Contractor elect to traverse, with construction equipment or other vehicles, grassed or unpaved areas which are not established roadways, such areas shall be covered with a layer of gravel as necessary to prevent rutting and the tracking of mud onto paved or established roadways; gravel gradation shall be at the Contractor's discretion. Grass located within the boundaries of the construction site shall be mowed for the duration of the project. Grass and vegetation along fences, buildings, under trailers, and in areas not accessible to mowers shall be edged or trimmed neatly.

1.5.6 New Building

In the event a new building is constructed for the temporary project field office, it shall be a minimum 3.6 m in width, 5 m in length and have a minimum of 2.1 m headroom. It shall be equipped with approved electrical wiring, at least one double convenience outlet and the required switches and fuses to provide 110-120 volt power. It shall be provided with a work table with stool, desk with chair, two additional chairs, and one legal size file cabinet that can be locked. The building shall be waterproof, shall be supplied with heater, shall have a minimum of two doors, electric lights, a telephone, a battery operated smoke detector alarm, a sufficient number of adjustable windows for adequate light and ventilation, and a supply of approved drinking water. Approved sanitary facilities shall be furnished. The windows and doors shall be screened and the doors provided with dead bolt type locking devices or a padlock and heavy duty hasp bolted to the door. Door hinge pins shall be non-removable. The windows shall be arranged to open and to be securely fastened from the inside. Glass panels in windows shall be protected by bars or heavy mesh screens to prevent easy access to the building through these panels. In warm weather, air conditioning capable of maintaining the office at 50 percent relative humidity and a room temperature 11 degrees C below the outside temperature when the outside temperature is 35 degrees C, shall be furnished. Any new building erected for a temporary field office shall be maintained by the Contractor during the life of the contract and upon completion and acceptance of the work shall become the property of the Contractor and shall be removed from the site. All charges for telephone service for the temporary field office shall be borne by the Contractor, including long distance charges up to a maximum of $75.00 per month.

1.5.7 Security Provisions

Adequate outside security lighting shall be provided at the Contractor's temporary facilities. The Contractor shall be responsible for the security of its own equipment; in addition, the Contractor shall notify the appropriate law enforcement agency requesting periodic security checks of the temporary project field office.

1.6 PLANT COMMUNICATION

Whenever the Contractor has the individual elements of its plant so located that operation by normal voice between these elements is not satisfactory, the Contractor shall install a satisfactory means of communication, such as telephone or other suitable devices. The devices shall be made available for use by Government personnel.

1.7 TEMPORARY PROJECT SAFETY FENCING

As soon as practicable, but not later than 15 days after the date established for commencement of work, the Contractor shall furnish and erect temporary project safety fencing at the work site. The safety fencing shall be a high visibility orange colored, high density polyethylene grid or approved equal, a minimum of 1.1 m high, supported and tightly secured to steel posts located on maximum 3 m centers, constructed at the approved location. The safety fencing shall be maintained by the Contractor during the life of the contract and, upon completion and acceptance of the work, shall become the property of the Contractor and shall be removed from the work site.

1.8 INSTALLATION REGULATIONS

The employees of the Contractor will be required to abide by all installation regulations as published by the Commanding Officer. A copy of these regulations can be obtained from the Area/Resident Engineer at the installation. All costs in connection therewith shall be included in the contract price for the work.

1.9 TESTING LABORATORIES

Testing is required to be performed by the Contractor as part of his Quality Control Program to verify contract compliance. This Quality Control Testing is to be conducted by a project or commercial laboratory which has been found adequate and qualified by a Corps of Engineers Division Laboratory Inspection Team.

1.9.1 Approved Testing Laboratories

A composite listing of approved testing laboratories within the Savannah District is available upon request. The Contractor should engage the services of a laboratory contained in the composite list. Contractors may obtain the list by calling (678) 354-0310. Fax requests can be made to number (678) 354-0330.

1.9.2 Other Laboratory Services

The Contractor may engage the services of a laboratory other than those approved by Corps of Engineers District Laboratory Inspection Team if they comply with the following:

a. The Contractor identifies and proposes the unapproved laboratory a minimum of 90 days prior to the start of testing. This time is necessary to allow for scheduling an inspection by a Corps of Engineers District Laboratory team. The time for Government inspection will not be the basis for an increase in the contract performance period.

b. All costs of Government inspection shall be the responsibility of the Contractor.

c. The Contractor may request Government inspection and approval prior to award by forwarding a written request to:

US Army Engineer District, Savannah
Environmental and Materials Unit
200 North Cobb Parkway
Building 400, Suite 404
Marietta, GA 30062

1.10 CONSTRUCTION SCHEDULE RESTRAINTS - ROBINS AFB, GA

1.10.1 Occupancy

The work to be performed is to be accomplished mostly in facilities which will be unoccupied and vacant during the course of construction. It is the intent of these provisions to provide for maximum coordination between construction activities pursuant to this contract and concurrent ongoing routine activities of base personnel. Interference with and inconvenience to the occupants or routine of the facility shall be held to an absolute minimum.

1.10.2 Disposal of Waste/Excess Material

Excess clean fill dirt and topsoil shall be disposed of off Base.

1.10.3 Use of Radios

The Contractor will be permitted to use radios only when approved in writing by the Contracting Officer.

1.10.4 Contractor Entry and Exit Procedures

1.10.4.1 Entry

Entry into the Base will be gained through gate 12 during the hours of 6 a.m. through 5 p.m. Monday through Friday, excluding holidays. Access required at any other times will be through the main gate and around the south end of the runway.

1.10.4.2 Contractor Vehicles

All Contractor vehicles will be clearly identified as such to gain entry to the Base. All Contractor personnel shall possess the required passes and identification at all times while at work on Base.

1.10.4.3 AFMC Form 496

AFMC Form 496 is used to request and record the issuance of identification cards (AFMC Form 87). A requesting official from the Contractor will initiate the forms, assure their accuracy, and delivery them to Pass and Identification Office. Identification cards issued to the Contractor personnel must be returned when the individual ceases to be employed by the Contractor or the pass is no longer valid.

1.10.4.4 Identification Cards

The Contractor shall furnish a list of all personnel authorized identification cards for this contract and shall update it so that is it current at all times. This list shall be furnished to the Pass and Identification Office on company letterhead and shall include the contract number, location of the work site, and expiration dates.

1.10.4.5 Credentials

When the contract terminates or the identification credentials expire, the Contractor must make certain that all credentials issued to employees and subcontractors' employees are returned to the Pass and Identification

Office. A letter of certification shall be submitted to the Contracting Officer stating that all Base identification badges have been accounted for. The Contractor shall submit a copy of this certification with the final pay request. Noncompliance with these requirements will result in withholding of final payment.

1.10.5 Cutting of Roads and Streets

All roads and streets which require surface cutting under this project shall be repaired to their original condition or as otherwise specified within 10 workdays after the initial cutting unless otherwise specified. Any construction work on or near roads or streets which does not require complete closure to traffic and which may present a traffic hazard shall be marked, barricaded, and lighted in accordance with EM 385-1-1.

1.10.6 Storage Areas

1.10.6.1 Storage

The Contractor's storage area is indicated on the plans. The Contractor shall cooperate with other contractors utilizing the adjacent areas and not block the entrance to the area at any time.

1.10.6.2 Security

All items stored on Base by the Contractor are the sole responsibility of the Contractor.

1.10.7 Adverse Weather Data Forms

The Contractor will utilize adverse weather data forms to track weather days. The Contractor of his designated representative will agree on the number of weather days on a monthly basis with the Contracting Officer's Representative.

1.10.8 Time of Performance

Work requiring outages of utilities or building systems will be accomplished after normal working hours and/or on weekends in accordance with prior approved schedule(s).

1.10.9 Outages

Contractor's work requiring outages of utility systems or building systems will require 2 weeks' advance notice and will be subject to the approval of the Contracting Officer. Notice shall include type of outage, date, and time outage will commence and estimated duration of outage.

1.10.10 Continuity

All tools, labor and materials required to complete any item of work within a given work area or requiring an outage of any building utility or system, shall be available at the site prior to commencement thereof. Once work has commenced on an item of work, said work shall be continuously and diligently performed to completion and acceptance. Breaks in work to be negotiated with the Contracting Officers Representative if other then Holidays.

1.11 REQUEST FOR INFORMATION (RFI) SYSTEM

The Government has developed an electronic database, the Request for Information (RFI) System, to track and answer Contractor questions, requests for information and clarifications during construction. The use of the RFI System for all requests (the Contractor's as well as the subcontractors'/suppliers') is a contractual requirement for this project. The Contractor will enter the system over the Internet using a WEB browser such as Internet Explorer 5.0 or newer or Netscape 4.7 or newer and any Internet service provider. The Government will provide the Contractor a user identification and password for the system that will only allow the Contractor to enter and view the requests for this project. The Contractor will provide the Government the E-mail address for the individual(s) inputting into the system in order that E-mail messages can be sent from the Government to the Contractor indicating a response to the request. The Government will provide instructions in the use of the RFI system. The Contractor must fill in seven fields in the Contractor Data portion of the RFI form, which include Date Required, Priority, Short Description, Problem Description, Recommended Action, Cost, and Time. The Government will be notified through an E-mail message that the Contractor has entered a request into the system. When the Government has answered the request, an E-mail message will be sent informing the Contractor that the answer to the request is in the system. The Contractor will enter the system to retrieve the answer using the same procedure to enter the question. The RFI System assigns a unique number to each request. The Contractor will not be reimbursed separately for the required use of this system. The Contractor shall include any costs associated with the use of this system into their bid.

1.12 PROGRESS PHOTOGRAPHS

The Contractor shall, during the progress of the project, furnish the Contracting Officer progress photographs and color slides to depict progress of construction. The photographic work shall be performed by a qualified, established, commercial photographer. The photographs and slides shall be taken between the 1st and 5th day of each month and be delivered to the Contracting Officer not later than the 20th day of the same month taken. The photographs and slides shall be taken from not less than six positions for each month as selected by the Contracting Officer. They shall show, inasmuch as practicable, work accomplished during the previous month. The photographs shall be 8-inch by 10-inch color glossy prints and the slides 35 millimeter color slides. Each photograph shall be identified showing date made, contract title and number and a brief description of work depicted and shall be sequentially numbered. The identifying data shall be placed on the back of the prints. Slides shall have a number placed on the frame corresponding to the appropriate identified print, the name of the project, the date and a brief description of work depicted. No identifying data shall appear on the face of prints or in the viewing area of slides. One copy of each photograph and the corresponding negative and slide shall be furnished to the Contracting Officer by the time stipulated above. No separate payment will be made for these services and all costs in connection therewith shall be considered incidental to costs of the overall project.

1.13 CLEANUP

Construction debris, waste materials, packaging material and the like shall be removed from the work site daily. Any dirt or mud which is tracked onto paved or surfaced roadways shall be cleaned away. Materials resulting from demolition activities which are salvageable shall be stored within the

fenced area described above or at the supplemental storage area. Stored material not in trailers, whether new or salvaged, shall be neatly stacked when stored.

1.14 RESTORATION OF STORAGE AREA

Upon completion of the project and after removal of trailers, materials, and equipment from within the fenced area, the fence shall be removed and will become the property of the Contractor. Areas used by the Contractor for the storage of equipment or material, or other use, shall be restored to the original or better condition. Gravel used to traverse grassed areas shall be removed and the area restored to its original condition, including top soil and seeding as necessary.

PART 2 PRODUCTS (NOT APPLICABLE)
PART 3 EXECUTION (NOT APPLICABLE)

-- End of Section --

SECTION 01780

AS-BUILT DRAWINGS SUBMITTALS
01/99

PART 1 GENERAL

1.1 OMITTED

1.2 SUBMITTALS

Government approval is required for submittals with a "G" designation; submittals not having a "G" designation are for information only. When used, a designation following the "G" designation identifies the office that will review the submittal for the Government. The following shall be submitted in accordance with Section 01330 SUBMITTAL PROCEDURES:

SD-02 Shop Drawings

As-Built Drawings; G

Drawings showing final as-built conditions of the project. The CADD drawings shall consist of two sets of completed final as-built drawings on separate media. One set of media shall be CADD drawing files. The other set of media shall consist of one set of mylars, two sets of blue line prints of the mylars, and the approved marked working as-built prints.

SD-03 Product Data

As-Built Record of Equipment and Materials; G

Two copies of the record listing the as-built materials and equipment incorporated into the construction of the project.

1.3 PROJECT RECORD DOCUMENTS

1.3.1 As-Built Drawings

This paragraph covers as-built drawings complete, as a requirement of the contract. The terms "drawings," "contract drawings," "drawing files," "working as-built drawings" and "final as-built drawings" refer to contract drawings that are revised to be used for final as-built drawings.

1.3.1.1 Government Furnished Materials

One set of electronic CADD files in the specified software and format revised to reflect all bid amendments will be provided by the Government at the preconstruction conference for projects requiring CADD file as-built drawings.

1.3.1.2 Working As-Built and Final As-Built Drawings

The Contractor shall revise two sets of paper drawings by redline process to show the as-built conditions during the prosecution of the project. These working as-built marked drawings shall be kept current on a weekly basis and

available on the job site at all times. Changes from the contract plans that are made in the work or additional information that might be uncovered in the course of construction shall be accurately and neatly recorded as they occur by means of details and notes. Final as-built drawings shall be prepared after the completion of specific phases of work (foundations, utilities, structural steel, etc., as appropriate for the project). The working as-built marked prints and final as-built drawings will be jointly reviewed for accuracy and completeness by the Contracting Officer and the Contractor prior to incremental submission of each monthly pay estimate. If the Contractor fails to maintain the working and final as-built drawings as specified herein, the Contracting Officer will deduct from the monthly progress payment an amount representing the estimated cost of maintaining the as-built drawings. This monthly deduction will continue until an agreement can be reached between the Contracting Officer and the Contractor regarding the accuracy and completeness of updated drawings. Noncompliance with regard to maintaining as-built drawings will be consideration for an interim unsatisfactory Contractor performance evaluation. The working and final as-built drawings shall show the following information, but not be limited thereto:

a. The actual location, kinds and sizes of all sub-surface utility lines. In order that the location of these lines and appurtenances may be determined in the event the surface openings or indicators become covered over or obscured, the as-built drawings shall show, by offset dimensions to two permanently fixed surface features, the end of each run including each change in direction. Valves, splice boxes and similar appurtenances shall be located by dimensioning along the utility run from a reference point. The average depth below the surface of each run shall also be recorded.

b. The location and dimensions of any changes within the building structure.

c. Correct grade, elevations, cross section, or alignment of roads, earthwork, structures or utilities if any changes were made from contract plans.

d. Changes in details of design or additional information obtained from working drawings specified to be prepared and/or furnished by the Contractor; including but not limited to fabrication, erection, installation plans and placing details, pipe sizes, insulation material, dimensions of equipment foundations, etc.

e. The topography, invert elevations and grades of drainage installed or affected as part of the project construction.

f. Changes or modifications that result from the final inspection.

g. Where contract drawings or specifications present options, only the option selected for construction shall be shown on the final as-built prints.

h. If borrow material for this project is from sources on Government property, or if Government property is used as a spoil area, the Contractor shall furnish a contour map of the final borrow pit/spoil area elevations.

i. Systems designed or enhanced by the Contractor, such as, HVAC controls, fire alarm, fire sprinkler, and irrigation systems.

j. Modifications (change order price shall include the Contractor's cost to change working and final as-built drawings to reflect modifications) and comply with the following procedures.

(1) Directions in the modification for posting descriptive changes shall be followed.

(2) A modification circle shall be placed at the location of each deletion.

(3) For all new details or sections which are added to a drawing, a modification circle shall be placed by the detail or section title.

(4) For minor changes, a modification circle shall be placed by the area changed on the drawing (each location).

(5) For major changes to a drawing, place a modification circle by the title of the affected plan, section, or detail at each location.

(6) For changes to schedules or drawings, a modification circle shall be placed either by the schedule heading or by the change in the schedule.

(7) The modification circle size shall be 12.7 mm 1/2 inch diameter unless the area where the circle is to be placed is crowded. Smaller size circle shall be used for crowded areas.

1.3.1.3 Drawing Preparation

The as-built drawings shall be modified as may be necessary to correctly show the features of the project as it has been constructed by bringing the contract set into agreement with approved working as-built prints, adding such additional drawings as may be necessary. At the time of final inspection, one copy of the working as-built prints shall be delivered to the Contracting Officer for review and approval. These working as-built marked prints shall be neat, legible and accurate. These drawings are part of the permanent records of this project and shall be returned to the Contracting Officer. The Contractor at no expense to the Government shall satisfactorily replace any drawings damaged or lost by the Contractor.

1.3.1.4 Computer Aided Design and Drafting (CADD) Drawings

Only personnel proficient in the preparation of CADD drawings shall be employed to modify the contract drawings or prepare additional new drawings. Additions and corrections to the contract drawings shall be equal in quality and detail to that of the originals. Line colors, line weights, lettering, layering conventions, and symbols shall be the same as the original line colors, line weights, lettering, layering conventions, and symbols. If additional drawings are required, they shall be prepared using the specified electronic file format applying the same guidance specified for original drawings. The title block and drawing border to be used for any new final as-built drawings shall be identical to that used on the contract drawings. Additions and corrections to the contract drawings shall be accomplished using CADD files. The Contractor will use the most current version of Microstation software using Windows NT operating system. The electronic files will be supplied on ISO 9660 Format compact dics, read-only memory

(CD-ROM). The Contractor shall be responsible for providing all program files and hardware necessary to prepare final as-built drawings. The Contracting Officer will review final as-built drawings for accuracy and the Contractor shall make all required corrections, changes, additions, and deletions.

a. When final revisions have been completed, the cover sheet drawing shall show the wording "RECORD DRAWING AS-BUILT" followed by the name of the Contractor in letters at least 3/16 inch high. All other contract drawings shall be marked either "AS-Built" drawing denoting no revisions on the sheet or "Revised As-Built" denoting one or more revisions. Original contract drawings shall be dated in the revision block.

b. After receipt by the Contractor of the approved working as-built prints and approval of completed sections of final as-builts the Contractor shall, within 10 days for each specific phase of work for contracts less than $5 million, or 20 days for each specific phase of work for contracts $5 million and above, make the final as-built submittal. This submittal shall consist of one ISO 9660 compact disc, read-only memory (CD-ROM), one set of mylars, and two sets of prints of these drawings and the return of the approved marked working as-built prints. They shall be complete in all details and identical in form and function to the contract drawing files supplied by the Government. Any transactions or adjustments necessary to accomplish this are the responsibility of the Contractor. The Government reserves the right to reject any drawing files it deems incompatible with the customer's CADD system. All paper prints, drawing files and storage media submitted will become the property of the Government upon final approval. Failure to submit final as-built drawing files and marked prints as specified shall be cause for withholding any payment due the Contractor under this contract and shall be grounds for a final unsatisfactory Contractor performance evaluation. Approval and acceptance of final as-built drawings shall be accomplished before final payment is made to the Contractor.

1.3.1.5 Omitted

1.3.1.6 Payment

No separate payment will be made for as-built drawings required under this contract, and all costs in connection therewith shall be considered a subsidiary obligation of the Contractor.

PART 2 PRODUCTS (NOT USED)
PART 3 EXECUTION (NOT USED)

SECTION 01781N

OPERATION AND MAINTENANCE DATA
03/98

PART 1 GENERAL

1.1 SUBMISSION OF OPERATION AND MAINTENANCE DATA

Submit Operation and Maintenance (O&M) Data/Manuals which are specifically applicable to this contract and a complete and concise depiction of the provided equipment or product. Organize and present information in sufficient detail to clearly explain O&M requirements at the system, equipment, component, and subassembly level. Include an index preceding each submittal. Submit in accordance with this section and Section 01330, "Submittal Procedures."

1.1.1 Quantity

Submit ~~five~~ six sets of the supplier/manufacturers' O&M information specified herein for the components, assemblies, subassemblies, attachments, and accessories, plus two CD's with electronic versions (*.doc or *.pdf) of the manuals. The items for which O&M Data/Manuals are required are listed in the technical sections that specify those particular items.

1.1.2 Package Quality

Documents must be fully legible. Poor quality copies and material with hole punches obliterating the text or drawings will not be accepted.

1.1.3 Package Content

Data package content shall be as shown in the paragraph titled "Schedule of Operation and Maintenance Data Packages." For each product, system, or component piece of equipment requiring submission of O&M Data, submit the Data Package specified in the individual technical section.

1.1.4 Delivery

Submit O&M Data Manuals to the Contracting Officer for review and acceptance. Submit data specified for a given item within 30 calendar days after the item is delivered to the contract site. In the event the Contractor fails to deliver O&M Data/Manuals within the time limits set forth above, the Contracting Officer may withhold from progress payments 50 percent of the price of the item with which such O&M Data/Manuals are associated.

1.1.5 Changes to Submittals

The Contractor shall furnish manufacturer-originated changes or revisions to submitted data if a component of an item is so affected subsequent to acceptance of the O&M Data. The Contractor shall submit changes, additions, or revisions required by the Contracting Officer for final acceptance of submitted data, within 30 calendar days of the notification of this change requirement.

1.2 TYPES OF INFORMATION REQUIRED IN O&M DATA PACKAGES

1.2.1 Operating Instructions

Include specific instructions, procedures, and illustrations for the following phases of operation:

1.2.1.1 Safety Precautions

List personnel hazards and equipment or product safety precautions for all operating conditions.

1.2.1.2 Operator Prestart

Include procedures required to set up and prepare each system for use.

1.2.1.3 Startup, Shutdown, and Post shutdown Procedures

Provide narrative description for each operating procedure including control sequence for each.

1.2.1.4 Normal Operations

Provide narrative description of normal operating procedures. Include control diagrams with data to explain operation and control of systems and specific equipment.

1.2.1.5 Emergency Operations

Include emergency procedures for equipment malfunctions to permit a short period of continued operation or to shut down the equipment to prevent further damage to systems and equipment. Include emergency shutdown instructions for fire, explosion, spills, or other foreseeable contingencies. Provide guidance on emergency operations of all utility systems including valve locations and portions of systems controlled.

1.2.1.6 Operator Service Requirements

Include instructions for services to be performed by the operator such as lubrication, adjustment, inspection, and gage reading recording.

1.2.1.7 Environmental Conditions

Include a list of environmental conditions (temperature, humidity, and other relevant data) that are best suited for each product or piece of equipment and describe conditions under which equipment should not be allowed to run.

1.2.2 Preventive Maintenance

Include the following information for preventive and scheduled maintenance to minimize corrective maintenance and repair.

1.2.2.1 Lubrication Data

Include lubrication data, other than instructions for lubrication in accordance with paragraph titled "Operator Service Requirements":

a. A table showing recommended lubricants for specific temperature ranges and applications;

b. Charts with a schematic diagram of the equipment showing lubrication points, recommended types and grades of lubricants, and capacities; and

c. A lubrication schedule showing service interval frequency.

1.2.2.2 Preventive Maintenance Plan and Schedule

Include manufacturer's schedule for routine preventive maintenance, inspections, tests and adjustments required to ensure proper and economical operation and to minimize corrective maintenance and repair. Provide manufacturer's projection of preventive maintenance work-hours on a daily, weekly, monthly, and annual basis including craft requirements by type of craft. For periodic calibrations, provide manufacturer's specified frequency and procedures for each separate operation.

1.2.3 Corrective Maintenance (Repair)

Include manufacturer's recommendations on procedures and instructions for correcting problems and making repairs.

1.2.3.1 Troubleshooting Guides and Diagnostic Techniques

Include step-by-step procedures to promptly isolate the cause of typical malfunctions. Describe clearly, why the checkout is performed and what conditions are to be sought. Identify tests or inspections and test equipment required to determine whether parts and equipment may be reused or requires replacement.

1.2.3.2 Wiring Diagrams and Control Diagrams

Wiring diagrams and control diagrams shall be point-to-point drawings of wiring and control circuits including factory-field interfaces. Provide a complete and accurate depiction of the actual job specific wiring and control work. On diagrams, number electrical and electronic wiring and pneumatic control tubing and the terminals for each type, identically to actual installation numbering.

1.2.3.3 Maintenance and Repair Procedures

Include instructions and list tools required to restore product or equipment to proper condition or operating standards.

1.2.3.4 Removal and Replacement Instructions

Include step-by-step procedures and list required tools and supplies for removal, replacement, disassembly, and assembly of components, assemblies, subassemblies, accessories, and attachments. Provide tolerances, dimensions, settings and adjustments required. Instructions shall include a combination of text and illustrations.

1.2.3.5 Spare Parts and Supply Lists

Include lists of spare parts and supplies required for maintenance and repair to ensure continued service or operation without unreasonable delays. Special consideration is required for facilities at remote locations. List spare parts and supplies that have a long lead-time to obtain.

1.2.3.6 Corrective Maintenance Work-Hours

Include manufacturer's projection of corrective maintenance work-hours including craft requirements by type of craft. Corrective maintenance that requires participation of the equipment manufacturer shall be identified and tabulated separately.

1.2.4 Appendices

Provide information required below and information not specified in the preceding paragraphs but pertinent to the maintenance or operation of the product or equipment. Include the following:

1.2.4.1 Parts Identification

Provide identification and coverage for all parts of each component, assembly, subassembly, and accessory of the end items subject to replacement. Include special hardware requirements, such as requirement to use high-strength bolts and nuts. Identify parts by make, model, serial number, and source of supply to allow reordering without further identification. Provide clear and legible illustrations, drawings, and exploded views to enable easy identification of the items. When illustrations omit the part numbers and description, both the illustrations and separate listing shall show the index, reference, or key number that will cross-reference the illustrated part to the listed part. Components, assemblies, and subassemblies shall group parts shown in the listings. Parts data may cover more than one model or series of equipment, components, assemblies, subassemblies, attachments, or accessories, such as a master parts catalog, in accordance with the manufacturer's standard commercial practice.

1.2.4.2 Warranty Information

List and explain the various warranties and include the servicing and technical precautions prescribed by the manufacturers or contract documents to keep warranties in force. Include warranty information for primary components such as the compressor of air conditioning system.

1.2.4.3 Personnel Training Requirements

Provide information available from the manufacturers to use in training designated personnel to operate and maintain the equipment and systems properly.

1.2.4.4 Testing Equipment and Special Tool Information

Include information on test equipment required to perform specified tests and on special tools needed for the operation, maintenance, and repair of components.

1.2.4.5 Contractor Information

Provide a list that includes the name, address, and telephone number of the General Contractor and each subcontractor installing the product or equipment. Include local representatives and service organizations most convenient to the project site. Provide the name, address, and telephone number of the product or equipment manufacturers.

PART 2 PRODUCTS (Not used)
PART 3 EXECUTION (Not used)