US Army Corps
of Engineers
Savannah District

Pope AFB
North Carolina

Solicitation Number
DACA21-03-R-0047
Miscellaneous Airfield Repairs
FY-03, Line Item 3385000
August 2003

THIS SOLICITATION IS UNRESTRICTED PURSUANT TO THE "BUSINESS OPPORTUNITY DEVELOPMENT REFORM ACT OF 1988" (PUBLIC LAW 100-656)

U.S. ARMY ENGINEER DISTRICT, SAVANNAH
CORPS OF ENGINEERS
100 WEST OGLETHORPE AVENUE
SAVANNAH, GEORGIA 31401-3640

TABLE OF CONTENTS

00010 Solicitation/Contract Form and Bidding Schedule

00100 Instructions, Conditions, and Notices to Offerors

00600 Representations and Certifications

00700 Contract Clauses

00800 Special Contract Requirements

Attachment 1 to Section 00800

Specifications - Divisions 1 through 16

SOLICITATION, OFFER, AND AWARD (Construction, Alteration, or Repair)	1. SOLICITATION NO. DACA21-03-R-0047-0006	2. TYPE OF SOLICITATION [ ] SEALED BID (IFB) [X] NEGOTIATED (RFP)	3. DATE ISSUED 05-Aug-2003	PAGE OF PAGES 1 OF 80

IMPORTANT - The "offer" section on the reverse must be fully completed by offeror.

4. CONTRACT NO.	5. REQUISITION/PURCHASE REQUEST NO.	6. PROJECT NO.

7. ISSUED BY CODE DOC	8. ADDRESS OFFER TO (If Other Than Item 7) CODE
US ARMY CORPS OF ENGINEERS 100 WEST OGLETHORPE AVE. SAVANNAH GA 31401-3640 TEL: FAX:	**See Item 7** TEL: FAX:

9. FOR INFORMATION CALL:	A. NAME	B. TELEPHONE NO. (Include area code) (NO COLLECT CALLS)
	ELLIOTT WILLIAMSON III	(912)652-5709

SOLICITATION

NOTE: In sealed bid solicitations "offer" and "offeror" mean "bid" and "bidder".

10. THE GOVERNMENT REQUIRES PERFORMANCE OF THE WORK DESCRIBED IN THESE DOCUMENTS (Title, identifying no., date):

Performance Price Trade-Off, Miscellaneous Airfield Repairs, Pope AFB, NC

Please send all correspondence or direct inquiries to the below Contract Specialist::
Contract Specialist Elliott Williamson
Ph: 912-652-5709 fax: 912-652-5828
email: elliott.williamson@sas02.usace.army.mil

Contracting Officer Julie M. Oliver
Ph: 912-652-5899
email: julie.m.oliver@sas02.usace.army.mil

* See Section 00800, Clause 52.211-10

11. The Contractor shall begin performance within 5 calendar days and complete it within _____ calendar days after receiving [ ] award, [X] notice to proceed. This performance period is [X] mandatory, [ ] negotiable. (See _____.)

12 A. THE CONTRACTOR MUST FURNISH ANY REQUIRED PERFORMANCE AND PAYMENT BONDS? (If "YES," indicate within how many calendar days after award in Item 12B.) [X] YES [ ] NO	12B. CALENDAR DAYS 10

13. ADDITIONAL SOLICITATION REQUIREMENTS:

A. Sealed offers in original and 1 copies to perform the work required are due at the place specified in Item 8 by 03:00 PM (hour) local time 15 Sep 2003 (date). If this is a sealed bid solicitation, offers must be publicly opened at that time. Sealed envelopes containing offers shall be marked to show the offeror's name and address, the solicitation number, and the date and time offers are due.

B. An offer guarantee [X] is, [ ] is not required.

C. All offers are subject to the (1) work requirements, and (2) other provisions and clauses incorporated in the solicitation in full text or by reference.

D. Offers providing less than 60 calendar days for Government acceptance after the date offers are due will not be considered and will be rejected.

SOLICITATION, OFFER, AND AWARD (Continued)

(Construction, Alteration, or Repair)

OFFER ***(Must be fully completed by offeror)***

14. NAME AND ADDRESS OF OFFEROR *(Include ZIP Code)*	15. TELEPHONE NO. *(Include area code)*
	16. REMITTANCE ADDRESS *(Include only if different than Item 14)* **See Item 14**
CODE / FACILITY CODE	

17. The offeror agrees to perform the work required at the prices specified below in strict accordance with the terms of this solicitation, if this offer is accepted by the Government in writing within _____ calendar days after the date offers are due. *(Insert any number equal to or greater than the minimum requirements stated in Item 13D. Failure to insert any number means the offeror accepts the minimum in Item 13D.)*

AMOUNTS	SEE SCHEDULE OF PRICES

18. The offeror agrees to furnish any required performance and payment bonds.

19. ACKNOWLEDGMENT OF AMENDMENTS

(The offeror acknowledges receipt of amendments to the solicitation -- give number and date of each)

AMENDMENT NO.										
DATE										

20A. NAME AND TITLE OF PERSON AUTHORIZED TO SIGN OFFER *(Type or print)*	20B. SIGNATURE	20C. OFFER DATE

AWARD ***(To be completed by Government)***

21. ITEMS ACCEPTED:

22. AMOUNT	23. ACCOUNTING AND APPROPRIATION DATA

24. SUBMIT INVOICES TO ADDRESS SHOWN IN *(4 copies unless otherwise specified)*	**ITEM**	25. OTHER THAN FULL AND OPEN COMPETITION PURSUANT TO ☐ 10 U.S.C. 2304(c) ☐ 41 U.S.C. 253(c)
26. ADMINISTERED BY CODE		27. PAYMENT WILL BE MADE BY: CODE

CONTRACTING OFFICER WILL COMPLETE ITEM 28 OR 29 AS APPLICABLE

☐ 28. NEGOTIATED AGREEMENT *(Contractor is required to sign this document and return _____ copies to issuing office.)* Contractor agrees to furnish and deliver all items or perform all work, requisitions identified on this form and any continuation sheets for the consideration stated in this contract. The rights and obligations of the parties to this contract shall be governed by (a) this contract award, (b) the solicitation, and (c) the clauses, representations, certifications, and specifications or incorporated by reference in or attached to this contract.

☐ 29. AWARD *(Contractor is not required to sign this document.)* Your offer on this solicitation, is hereby accepted as to the items listed. This award consummates the contract, which consists of (a) the Government solicitation and your offer, and (b) this contract award. No further contractual document is necessary.

30A. NAME AND TITLE OF CONTRACTOR OR PERSON AUTHORIZED TO SIGN *(Type or print)*		31A. NAME OF CONTRACTING OFFICER *(Type or print)* TEL: EMAIL:
30B. SIGNATURE	30C. DATE	31B. UNITED STATES OF AMERICA BY / 31C. AWARD DATE

Section 00010 - Solicitation Contract Form

NOTICE TO OFFERORS

NOTICE TO OFFERORS

1. HAND-CARRIED OR MAILED PROPOSALS:

All proposals must be clearly identified with the contractor's name and address. To ensure timely and proper handling, the lower left corner of the outermost wrapper must indicate the Request For Proposal No., Due Date of Proposal, Time by which Proposals are Due, and Title of Project.

The Government will not be responsible for proposals delivered to any location or to anyone other than those designated to receive proposals on its behalf as indicated below.

Proposals delivered by commercial carrier and those sent by U.S. Mail, including U.S. Express Mail, must be addressed as indicated below. Proposals shall not be addressed to any specific person.

U.S. Army Engineer District, Savannah
ATTN: CESAS-CT-C
100 West Oglethorpe Avenue
Savannah, Georgia 31401-3640

Mailroom personnel on the first floor of 100 West Oglethorpe Avenue must receive proposals sent by U.S. Mail or delivered by commercial carrier by the time specified in Block 13 of the SF1442 for receipt of proposals.

Hand-carried proposals must also be delivered to mailroom personnel on the first floor of 100 West Oglethorpe Avenue by the time specified in Block 13 of SF1442 for receipt of proposals. Due to increased security requirements, it is suggested that hand-carried proposals be delivered 30 minutes prior to the specified time of receipt.

Offerors are cautioned that there is no parking in or around the building, and visitors must pass through security and sign in prior to being allowed access to the mailroom. Sufficient time must therefore be allowed when hand carrying proposals.

2. FACSIMILE MODIFICATIONS OF PROPOSALS ARE NOT AUTHORIZED.

3. QUALITY CONTROL SYSTEM (QCS):
Any contract award resulting from this solicitation will require the mandatory use of the automated Quality Control System. Please see Section 01312A for additional information.

4. WAGE RATES: SC020037 is applicable to this solicitation at the present time. As future wage rates become available from the Department of Labor, those will be applicable.

5. SECURITY REQUIREMENTS: All commercial vehicles larger than a pickup must enter the Fort Bragg, NC Post through one of two locations: Knox Street or Longstreet Road, where the vehicles will be "scanned." In order for Bragg's security actions to be effective, no commercial vehicles larger than a pickup will be allowed to directly enter into Fort Bragg.

SUPPLIES OR SERVICES AND PRICE/COSTS SCHEDULE

MISCELLANEOUS AIRFIELD REPAIRS
POPE AFB, NC

TOTAL BASE BID PLUS OPTIONS 1 THRU 4
(ITEMS 0001 THRU 0014)----------$_____

ITEM NO	SUPPLIES/SERVICES	QUANTITY	UNIT	AMOUNT
0001		1	Lump Sum	_____
	BASE BID Complete, Exclusive of all work listed in items 0002 thru 0003			

ITEM NO	SUPPLIES/SERVICES	QUANTITY	UNIT	AMOUNT
0002		1	Lump Sum	_____
	BASE BID Concrete Pavement			

ITEM NO	SUPPLIES/SERVICES	QUANTITY	UNIT	AMOUNT
0003		1	Lump Sum	_____
	BASE BID Hot-Mix Asphalt Pavement			

ITEM NO	SUPPLIES/SERVICES	QUANTITY	UNIT	AMOUNT
0004		1	Lump Sum	_____
	OPTION 1 Complete, Exclusive of all work listed in item 0005			

ITEM NO	SUPPLIES/SERVICES	QUANTITY	UNIT	AMOUNT
0005		1	Lump Sum	_____
	OPTION 1 Concrete Pavement			

ITEM NO	SUPPLIES/SERVICES	QUANTITY	UNIT	AMOUNT
0006		1	Lump Sum	_____
	OPTION 2 Complete, Exclusive of all work listed in items 0007 thru 0008			

ITEM NO	SUPPLIES/SERVICES	QUANTITY	UNIT	AMOUNT
0007		1	Lump Sum	_____
	OPTION 2 Concrete Pavement			

ITEM NO	SUPPLIES/SERVICES	QUANTITY	UNIT	AMOUNT
0008		1	Lump Sum	_____
	OPTION 2 Hot-Mix Asphalt Pavement			

ITEM NO	SUPPLIES/SERVICES	QUANTITY	UNIT	AMOUNT
0009		1	Lump Sum	_____
	OPTION 3 Complete, Exclusive of all work listed in items 0010 thru 0011			

ITEM NO	SUPPLIES/SERVICES	QUANTITY	UNIT	AMOUNT
0010		1	Lump Sum	_____
	OPTION 3 Concrete Pavement			

ITEM NO	SUPPLIES/SERVICES	QUANTITY	UNIT	AMOUNT
0011		1	Lump Sum	_____

OPTION 3
Hox-Mix Asphalt Pavement

ITEM NO	SUPPLIES/SERVICES	QUANTITY	UNIT	AMOUNT
0012		1	Lump Sum	_____

OPTION 4
Complete, Exclusive of all work listed in items 0013 thru 0014

ITEM NO	SUPPLIES/SERVICES	QUANTITY	UNIT	AMOUNT
0013		1	Lump Sum	_____

OPTION 4
Concrete Pavement

ITEM NO	SUPPLIES/SERVICES	QUANTITY	UNIT	AMOUNT
0014		1	Lump Sum	_____

OPTION 4
Hot-Mix Asphalt Pavement

Section 00100 - Bidding Schedule/Instructions to Bidders

EVALUATION REQUIREMENTS

Section 00100

INSTRUCTIONS, CONDITIONS, AND NOTICE TO OFFERORS

CONSTRUCTION CONTRACT
FOR
MISCELLANEOUS AIRFIELD REPAIRS, POPE AFB, NC

PERFORMANCE PRICE TRADE-OFF

1. PROPOSAL OVERVIEW. This Request for Proposal (RFP) is to solicit a Construction Contract for replacement of airfield taxiway and apron concrete pavement, asphalt shoulder pavement, buried large diameter storm water piping, shoulder lighting and other miscellaneous work.

1.1 General. Inasmuch as the proposal shall describe the capability of the Offeror to perform any resultant contract, it should be specific and complete in every detail. The proposal should be prepared simply and economically, providing straightforward, concise delineation of capabilities to satisfactorily perform the contract being sought. The proposal should therefore be practical, legible, clear and coherent. The process used for this solicitation will be a Request for Proposal (RFP) Best Value, (See Federal Acquisition Regulation 15.101). The evaluation criteria will include Construction-Past Performance and Construction-Experience.

1.2 Proposal Submissions and the Best Value Trade-Off Process. This process requires potential contractors to submit their performance and capability information initially for review and consideration by the Government. The technical information contained in the proposal shall be reviewed and evaluated by the Government in accordance with the evaluation criteria set out in this Section. Relative weights among technical factors are provided in paragraph 4.1 Relative Importance. Following the review, evaluation, and rating of these proposals, the Government will evaluate price proposals for Offerors that have acceptable technical proposals. Price proposal will be a price that represents the Offeror's direct, indirect costs and profit for the work covered by the solicitation. Offerors will be required to separately submit their price proposals. Price will not be scored, but will be a factor in establishing the competitive range prior to discussions and in making the final best value determination for award.

2. PROPOSAL SUBMISSION INSTRUCTIONS

2.1 Who May Submit.

2.1.1 Proposals may be submitted by firms formally organized as construction contractors or paving contractors. Both are referred to as the Offeror, or the Contractor, after award of a contract.

2.1.2 Any legally organized Offeror may submit a proposal.

2.2 Where to Submit. Offerors shall submit their proposal packages to the Savannah District at the address shown in Block 7 of Standard Form 1442.

2.3 Submission Deadline. Proposals shall be received by the Savannah District no later than the time and date specified in Block 13 of Standard Form 1442.

2.4 General Requirements.

2.4.1 In order to effectively and equitably evaluate all proposals, the Contracting Officer must receive information sufficiently detailed to allow review and evaluation by the Government.

2.4.2 Tabs. Proposal shall be organized and tabbed as shown in paragraph 2.5 Submission Format.

2.4.3 Size of Printed Matter Submissions.

2.4.3.1 Written materials shall be on 8-1/2" x 11" paper.

2.4.3.2 The proposals shall contain a detailed table of contents. If more than one binder is used, the complete table of contents shall be included in each. Any materials submitted but not required by this solicitation, (such as company brochures), shall be relegated to appendices.

2.4.4 Number of Copies. Offerors shall submit one (1) hard copy of Volume I and five (5) hard copies of Volume II of their Proposal. Both volumes shall also be submitted on a CD-ROM.

2.5 Submission Format.
2.5.1 The Proposal will be tabbed and submitted in a three ring binders in the following format:

PROPOSAL

VOLUME I

TAB A
SF 1442

TAB B
Section 00600 – Representations and Certifications

TAB C
PROPOSAL DATA SHEET – include Offeror's telephone number, FAX number, DUNS number, and Offeror's CCASS number

Tab D
Offeror's Proposed Cost – See below paragraph 2.5.2 – Contract Specialist will insert at appropriate time.

Tab E
Offeror's Bid Bond
Latest Financial Statement

VOLUME II
TAB A – FACTOR 1: CONSTRUCTION – PAST PERFORMANCE
Past Performance Questionnaires to be inserted by the Contract Specialist

TAB B – FACTOR 2: CONSTRUCTION - EXPERIENCE
Project Information Sheets

TAB C - Other Information

2.5.2 Price Proposal Information. Offerors shall complete all portions of the Price Proposal Schedule from Section 00010 and furnish the original in a separate envelope labeled "PRICE PROPOSAL". The technical proposal shall not include any cost information.

3. PROPOSAL AND SUBMISSION REQUIREMENTS AND EVALUATION

3.1 The Evaluation Team will evaluate each proposal individually using the qualitative/quantitative procedures that follow. Each proposal will be reviewed and rated by each of the evaluators. During this process, discrepancies between evaluations will be discussed and resolved within the team. Following the completion of the individual evaluations, a consensus evaluation will be derived.

3.1.1 Worksheets are provided on the following pages that the evaluators will use to review and rate the individual proposals.

3.1.2 During the consensus evaluation, a single "consensus rating" worksheet shall be completed for each proposal and signed by all the evaluators.

3.1.3 Comments and supporting rationale for the rating assigned will be included on this consensus sheet.

3.2 VOLUME II TAB A - FACTOR 1: CONSTRUCTION – PAST PERFORMANCE. Offerors shall be evaluated on replacement of airfield taxiway and apron concrete pavement, asphalt shoulder pavement, buried large diameter storm water piping, airfield lighting or other similar type contracts successfully completed or substantially completed in the last three years with the contracts performed falling within the range of $10,000,000 to $15,000,000. The Offeror's past performance in completing contracts during the last three years will be evaluated to determine technical capability to perform the proposed contract and how well it satisfied its customers. The information presented in the Offeror's submittal, together with that from other sources available to the Government will comprise the input for evaluation of this factor. The following elements will be evaluated:
Quality of Construction
Timeliness of Performance
Customer Satisfaction
Sub-contractor Management

3.2.1 Offeror's Submission Requirements. Offeror's shall identify the completed contracts (or substantially complete) as described above to be used for reference and evaluation purposes and provide a questionnaire to the Point of Contact for each contract listed. A sample Past Performance Evaluation Questionnaire is included at the end of this section. When completed, these forms shall be mailed, faxed or e-mailed to the Savannah District Contract Specialist identified in the sample transmittal letter provided. It is the contractor's responsibility to ensure that the reference documentation is provided, as the Government may not make additional requests for past performance information from the references. Copies of the evaluation form shall be provided to the Savannah District Contract Specialist directly from the reference. Contracts from which questionnaires are received shall have been completed or substantially completed within three years of the date of the solicitation. The Government may contact sources other than those provided by the Offeror for information with respect to past performance. These other sources may include CCASS (Construction Contractor Appraisal Support System), telephone interviews with organizations familiar with the Offeror's performance, and Government personnel with personal knowledge of the Offeror's performance capability.

3.2.2 Evaluation. The Government will evaluate the offeror's past performance using the sources available to it including the example projects identified by the Offeror, Past Performance Evaluation Questionnaires received, and CCASS. Offerors may be provided an opportunity to address any negative past performance information about which the Offeror has not previously had an opportunity to respond. The Government treats an Offeror's lack of past performance as having no positive or negative evaluation significance. The Government will evaluate past performance based on the elements listed below:

Quality of Construction. Based on information provided in the questionnaire and other information, the Government will assess the quality of the actual construction undertaken and the standards of workmanship exhibited by the Offeror's team.

Timeliness of Performance. The Government will evaluate all information available with respect to the Offeror completing past projects within the scheduled completion times.

Customer Satisfaction. The Government will evaluate all information available with respect to the Offeror's past customer satisfaction, cooperation with customers, and interaction on past projects.

Subcontractor Management. The Government will evaluate all information available with respect to the Offeror's management of subcontractors on past projects.

3.3 VOLUME II TAB B - FACTOR 2: CONSTRUCTION – EXPERIENCE. Offerors shall be evaluated on construction type contracts successfully completed or substantially completed in the last three years that demonstrate the offeror's specialized experience in the replacement of airfield taxiway and apron concrete pavement, asphalt shoulder pavement, buried large diameter storm water piping and airfield lighting. The majority of the contracts submitted by the Offeror for evaluation should fall within the range of $10,000,000 to $15,000,000.

3.3.1 Offeror's Submission Requirements. Offerors shall submit Project Information Sheets of construction projects completed, including those in progress during the last three years, listing all completed contracts separately that reflect specialized experience in the construction elements referenced in paragraph 3.3 above. As a minimum, the Project Information Sheets will provide project Point of Contact with telephone number, general character, scope, location, cost, and date of completion of each contact.

3.3.2 Evaluation. The Government will review the list of example contacts provided by the Offeror to evaluate and rate the recent relevant experience of the Offeror with similar projects. The example contracts that most closely resemble replacement of airfield taxiway and apron concrete pavement, asphalt shoulder pavement, buried large diameter storm water piping and airfield lighting projects will receive the highest consideration. If the Offeror cannot provide suitable relevant experience and the evaluators consider that the information provided indicates that the Offeror has no relevant experience, a determination will be made as to the risk this lack of corporate experience presents to the Government and the proposal will be evaluated accordingly.

3.4 PRICE. The Government will perform a price analysis on all proposals received. Price analysis will be performed in accordance with FAR 15.401-1, to determine reasonableness. Reasonableness will be established using historical price information, price competition information, the IGE, and any other pricing tools necessary.

3.5 Evaluation Standards. Evaluation criteria (factors) will be rated using the following adjectival descriptions. Evaluators will apply the appropriate adjective to each criterion rated. The evaluator's narrative explanation must clearly establish that the Offeror's submittal meets the definitions established below.

3.5.1 OUTSTANDING - Information submitted demonstrates Offeror's potential to significantly exceed performance or capability standards. The offeror has clearly demonstrated an understanding of all aspects of the requirements to the extent that timely and highest quality performance is anticipated. The Offeror possesses exceptional strengths that will significantly benefit the Government. The Offeror's qualifications meet the fullest expectations of the Government. The offeror has convincingly demonstrated that the RFP requirements have been analyzed, evaluated, and synthesized into approaches, plans, and techniques that, when implemented, should result in highly effective and efficient performance under the contract which represents low risk to the Government. An assigned rating of "outstanding" indicates that, in terms of the specific factor, the submittal contains no significant weaknesses, deficiencies or disadvantages. Offeror very significantly exceeds most or all solicitation requirements. Very high probability of success.

3.5.2 ABOVE AVERAGE - Information submitted demonstrates Offeror's potential to exceed performance or capability standards. Offeror possesses one or more strengths that will benefit the Government. The areas in which the Offeror exceeds the requirements are anticipated to result in a high level of efficiency, productivity, or quality. The Offeror's qualifications are responsive with minor weaknesses, but no major weaknesses noted. An assigned rating of "Above Average" indicates that, in terms of the specific factor, any weaknesses noted are minor and should not seriously

affect the offeror's performance. The submittal demonstrates that the requirements of the RFP are well understood and the approach will likely result in a high quality of performance which represents low risk to the Government. A rating of "Above Average" is used when there are no indications of exceptional features or innovations that could prove to be beneficial, or conversely, weaknesses that could diminish the quality of the effort or increase the risks of failure. Disadvantages are minimal. The submittal contains excellent features that will likely produce results very beneficial to the Government. Offeror fully meets all RFP requirements and significantly exceeds many of the RFP requirements. Response exceeds a "Satisfactory" rating. High probability of success.

3.5.3 SATISFACTORY - Information submitted demonstrates Offeror's potential to meet performance or capability standards. Offeror presents an acceptable solution and meets minimum standard requirements. Offeror possesses few or no advantages or strengths. The Offeror's proposal contains weaknesses in several areas that are offset by strengths in other areas. A rating of "Satisfactory" indicates that, in terms of the specific factor, the Offeror may satisfactorily complete the proposed tasks, but there is at least a moderate risk that it will not be successful. There is a good probability of success and that a fully acceptable level of performance will be achieved. Offeror meets all RFP requirements, presents a complete and comprehensive proposal, shows an understanding of the scope and depth of the task requirements, and displays understanding of the Government's requirements. Offeror's response exceeds a "Marginal" rating. No significant advantages or disadvantages.

3.5.4 MARGINAL - Information submitted demonstrates Offeror's potential to marginally meet performance or capability standards necessary for minimal but acceptable contract performance. The submittal is not adequately responsive or does not address the specific factor. The assignment of a rating of "Marginal" indicates that mandatory corrective action would be required to prevent significant deficiencies from affecting the overall project. The offeror's qualifications demonstrate an acceptable understanding of the requirements of the RFP and the approach will likely result in an adequate quality of performance, which represents a moderate level of risk to the Government. Offeror displays low probability of success, although the submittal has a reasonable chance of becoming at least acceptable. Offeror's response exceeds an "Unsatisfactory" rating. Significant disadvantages.

3.5.5 UNSATISFACTORY – Information submitted fails to meet performance or capability standards necessary for acceptable contractor performance. The Offeror's interpretation of the Government's requirements is so superficial, incomplete, vague, incompatible, incomprehensible, or incorrect it is Unsatisfactory. The submittal does not meet the minimum requirements of the RFP; requirements could only be met with major changes to the submittal. There is no reasonable expectation that acceptable performance would be achieved which represents high risk to the Government. The Offeror's qualifications have many deficiencies and/or gross omissions; fail to provide a reasonable, logical approach to fulfilling much of the Government's requirements; and, fail to meet many of the minimum requirements. The Offeror's qualifications are so unacceptable that it would have to be completely revised in order to attempt to make them acceptable. Very significant disadvantages.

4. EVALUATION FACTORS and WEIGHTS

4.1 Relative Importance. All factors are equal in weight.

4.2 Relative Importance Definition. Equal in weight term will be used to establish that the criterion is of the same value or nearly the same value as another criterion.

4.3 Price. Price will not be scored, but will be a factor in establishing the competitive range prior to discussions and in making the final best value determination for award.

5. OVERALL PROPOSAL RATING

5.1 Each member of the Government evaluation team will independently consider all information provided in the proposal. Once these individual analyses are completed, the team will meet and determine a rating for each of the evaluation factors by consensus decision.

5.2 Following completion of the consensus rating, each proposal will be assigned a single overall rating. This final overall rating, along with ratings on individual factors, will be provided to the Contracting Officer/Source Selection Authority.

5.3 The evaluation team will document sufficient strengths, weaknesses, and omissions to support the rating for each factor as well as the overall rating. Documentation and comments are required for all ratings.

6. BASIS FOR AWARD

6.1 In order to determine which proposal represents the best overall value, the Government will compare proposals to one another. The Government will award a contract to the responsible Offeror whose technical submittal and price proposal contains the combination of those criteria described in this document offering the best overall value to the Government. Best value will be determined by a comparative assessment of proposals against all source selection criteria in this RFP.

6.2 All evaluation factors other than cost or price, when combined are approximately equal to cost or price.

6.3 As technical ratings and relative advantages and disadvantages become less distinct, differences in price between proposals are of increased importance in determining the most advantageous proposal. Conversely, as differences in price become less distinct, differences in scoring and relative advantages and disadvantages between proposals are of increased importance to the determination.

6.4 The Government reserves the right to accept other than the lowest priced offer. The right is also reserved to reject any and all offers. The basis of award will be a conforming offer, the price or cost of which may or may not be the lowest. If other than the lowest offer, it must be sufficiently more advantageous than the lowest offer to justify the payment of additional amounts.

6.5 Offerors are reminded to include their best technical and price terms in their initial offer and not to automatically assume that they will have an opportunity to participate in discussions or be asked to submit a revised offer. The Government may make award of a conforming proposal without discussions, if deemed to be within the best interests of the Government.

7. EXCEPTIONS

Exceptions to the contractual terms and conditions of the solicitation (e.g., standard company terms and conditions) may result in a determination to reject a proposal.

8. RESTRICTIONS

Incomplete proposals. Failure to submit all the data in the format indicated in this section may be cause for determining a proposal incomplete and, therefore, not considered for evaluation, and for subsequent award.

PROPOSAL DATA SHEET

CONSTRUCTION CONTRACT
FOR
MISCELLANEOUS AIRFIELD REPAIRS, POPE AFB, NC

NOTE TO OFFERORS
This OFFEROR PERFORMANCE CAPABILITY PROPOSAL DATA SHEET must be completed and attached as the first page of the body of your proposal. The information required by this data sheet may be completed directly on this form or attached to the form as supplemental data sheets.

1. NAME OF OFFEROR.

Name of Offeror(s):

Offeror's Telephone Number:

Offeror's FAX Number:

If a joint venture or contractor-subcontractor association of firms, list the individual firms and briefly describe the nature of the association.

Firm 1:

Firm 2:

Nature of Association:

2. OFFEROR'S DUNS/CCASS NUMBER.
(If more than one DUNS number is to be considered explain affiliation to offeror)

3. AUTHORIZED NEGOTIATORS.

The offeror represents that the following persons are authorized to negotiate on its behalf with the Government in connection with this Request for Proposals (RFP).

[List names, titles, and telephone number of the authorized negotiator.]

Name of Person Authorized to Negotiate:

Negotiator's Address:

Negotiator's Telephone:

PROPOSAL DATA SHEET
(Continued)

4. FACTOR 1: CONSTRUCTION - PAST PERFORMANCE INFORMATION.

4.1 On an attached sheet, provide information for replacement of airfield taxiway and apron concrete pavement, asphalt shoulder pavement, buried large diameter storm water piping, airfield lighting or other similar contracts in-progress or completed by the Offeror over the last three years, in the cost range of $10,000,000 to $15,000,000, to be used for reference and evaluation purposes. These should be the same contracts for which questionnaires have been provided to the Procurement Point of Contact.

For each contract provide the following information:

Contract Title:

Location:

Contract number:

Nature of involvement in this project, i.e. General Contractor, subcontractor, designer:

Procuring activity:

Procurement point of contact and telephone number:

List date of construction completion or percent completion if construction is underway:

Address of building(s):

Address and telephone number of owner:

Indicate type of project (private sector, Government, planned unit development, etc.):

General character of the Project:

Total cost:

Total cost of all modifications:

6.2 On an attached sheet, list all contracts with the Government within the last three years. Indicate Government contract number and contracting agency (with contact names and telephone numbers).

6.3 You may provide additional information on your capabilities, but please be brief.

SAMPLE TRANSMITTAL LETTER
AND
PAST PERFORMANCE EVALUATION QUESTIONNAIRE
DACA21-03-R-0047

Date: _____

To: _____
_____
_____

We have listed your firm as a reference for work we have performed for you as listed below. Our firm has submitted a proposal under a contract advertised by the U.S. Army Corps of Engineers, Savannah District titled Miscellaneous Airfield Repairs, Solicitation Number DACA21-03-R-0047. In accordance with Federal Acquisition Regulations (FAR), an evaluation of our firm's past performance will be completed by the Corps of Engineers. Your candid response to the attached questionnaire will assist the evaluation team in this process.

We understand that you have a busy schedule and your participation in this evaluation is greatly appreciated. Please complete the enclosed questionnaire as thoroughly as possible. Space is provided for comments. Understand that while the responses to this questionnaire may be released to the offeror, FAR 15.306 (e)(4) prohibits the release of the names of the persons providing the responses. Complete confidentiality will be maintained. Furthermore, a questionnaire has also been sent to _____ of your organization. Only one response from each office is required. If at all possible, we request that you individually answer this questionnaire and then coordinate your responses with that of _____, to develop a consensus on one overall response from your organization.

Please send your completed questionnaire to the following address to arrive NOT LATER THAN _____:
(Date)

U.S. Army Engineer District, Savannah
Contracting Division
CESAS-CT-C(Elliott Williamson) DACA21-03-R-0047
100 West Oglethorpe Street
Savannah, Georgia 31402

The questionnaires can also be faxed to, Savannah District Contract Specialist at FAX 912-652-5828 or emailed to elliott.williamson@usace.army.mil. If you have questions regarding the attached questionnaire, or require assistance, please contact Elliott Williamson at 912-652-5709. Thank you for your assistance.

PAST PERFORMANCE EVALUATION QUESTIONNAIRE

MISCELLANEOUS AIRFIELD REPAIRS, POPE AFB, NC

DACA21-03-R-0047

Upon completion of this form, please send directly to the U.S. Army Corps of Engineers in the enclosed addressed envelope or fax to Elliott Williamson at FAX NUMBER 912-652-5828 or email to elliott.williamson@usace.army.mil.

Do not return this form to our offices. Thank you.

1. Contractor/Name & Address (City and State):

2. Type of Contract:

3. Title of Project/Contract Number/Contract Amount:
_____
_____
_____

4. Description of Work: (Attach additional pages as necessary)

5. Complexity of Work: High _____ Mid _____ Routine _____

6. Location of Work:_____

7. Date of Award: _____

8. Status: Active _____ (provide percent complete)

Complete _____ (provide completion date)

9. Name, address and telephone number of person completing this questionnaire:

10. QUALITY OF CONSTRUCTION:

Evaluate the contractor's performance in complying with the contract requirements, quality and the overall technical expertise demonstrated by the Contractor.

Outstanding Quality	
Above Average Quality	
Satisfactory Quality	
Marginal Quality	
Unsatisfactory Quality or Experienced Significant Quality Problems	

Remarks: _____

_____

_____

_____

_____

_____

_____

_____

_____

11. TIMELINESS OF PERFORMANCE:

To what extent did the contractor meet the contract and/or individual task order schedules?

Outstanding Timeliness – Completed Substantially Ahead of Schedule	
Above Average Timeliness – Completed on Schedule with no Time Delays	
Satisfactory Timeliness – Completed on Schedule with Minor Delays Under Extenuating Circumstances	
Marginal Timeliness – Completed Behind Schedule	
Unsatisfactory Timeliness – Experienced Significant Delays without Justification	

Remarks: _____

_____

_____

_____

_____

_____

_____

_____

_____

12. CUSTOMER SATISFACTION:

To what extent were the end users satisfied:

Outstanding – Exceptionally Satisfied	
Above Average – Highly Satisfied	
Satisfactory – Satisfied	
Marginal – Somewhat Dissatisfied	
Unsatisfactory – Highly Dissatisfied	

Remarks: _____

_____

_____

_____

_____

_____

_____

_____

_____

13. SUBCONTRACTOR MANAGEMENT

How well did the contractor manage and coordinate subcontractors, suppliers, and the labor force?

Outstanding	
Above Average	
Satisfactory	
Marginal	
Unsatisfactory	

Remarks: _____

_____

_____

_____

_____

_____

_____

_____

_____

14. If given the opportunity, would you work with this contractor again?

Yes _____ No _____ Not Sure _____

Remarks: _____

_____

_____

_____

_____

_____

_____

_____

_____

15 . OTHER REMARKS:

Use the space below to provide other information related to the contractor's performance. This may include the contractor's selection and management of subcontractors, flexibility in dealing with contract challenges, their overall concern for the Government's interest (if applicable), project awards received, etc.

_____

_____

_____

_____

_____

_____

_____

_____

_____

Offeror: _____

Evaluator: _____

PROPOSAL RATING WORKSHEET
FACTOR 1
CONSTRUCTION - PAST PERFORMANCE

1. General: The Government will evaluate each Offeror's past performance to determine how well it satisfied its customers. Evaluators will use this factor to evaluate the success of the Offeror based on the satisfaction of previous customers and clients as illustrated on the completed questionnaires.

Has Government received three completed questionnaires for this Offeror? __ YES __ NO

Do all the questionnaires received reflect contracts completed or substantially completed within the last 3 years?
__YES __ NO

2. CCASS Ratings: Contract Specialist shall provide CCASS Ratings for the Offeror.

Number of Ratings: Outstanding _____

Above Average _____

Satisfactory _____

Marginal _____

Unsatisfactory _____

OVERALL CCASS RATING. Select an appropriate overall rating for the CCASS evaluation information available:

/__/ Outstanding

/__/ Above Average

/__ / Satisfactory

/__ / Marginal

/__ / Unsatisfactory

Comments to support the OVERALL CCASS RATING:

Offeror: _____

Evaluator: _____

PROPOSAL RATING WORKSHEET
FACTOR 1
CONSTRUCTION - PAST PERFORMANCE
(Continued)

3. Relevant Evaluator Personal Knowledge: Has this evaluator had personal experiences with the offeror? If so, describe below:

4. Quality of Construction: Evaluators shall carefully evaluate the information provided in the completed questionnaires to ascertain a level of customer satisfaction with the quality of the past contracts. Based on that review, provide a rating for the Quality of Construction below. Include a listing of any apparent weaknesses or strengths of the Offeror.

/__/ Outstanding

/__/ Above Average

/__ / Satisfactory

/__ / Marginal

/__ / Unsatisfactory

4.1 Strengths: Include a listing of any identified or obvious strengths of the offeror with respect to final Quality of Construction.

4.2 Weaknesses: Include a listing of any identified or obvious weaknesses of the offeror with respect to final Quality of Construction.

4.3 Other: Include any other comments/rationale to support the overall rating provided for this Offeror.

Offeror: _____

Evaluator: _____

PROPOSAL RATING WORKSHEET
FACTOR 1
CONSTRUCTION – PAST PERFORMACE
(Continued)

5. Timeliness of Performance: Evaluators shall carefully review the information provided in the completed questionnaires to ascertain customer satisfaction with the timeliness of performance on the past contracts. Based on that review, provide a rating for the timeliness of performance of the past contracts below. Include a listing of any apparent weaknesses or strengths of the Offeror.

/__/ Outstanding

/__/ Above Average

/__ / Satisfactory

/__ / Marginal

/__ / Unsatisfactory

5.1 Strengths: Include a listing of any identified or obvious strengths of the offeror with respect to timeliness.

5.2 Weaknesses: Include a listing of any identified or obvious weaknesses of the offeror with respect to timeliness.

5.3 Other: Include any other comments/rationale to support the overall rating provided for this Offeror.

Offeror: _____

Evaluator: _____

PROPOSAL RATING WORKSHEET
FACTOR 1
CONSTRUCTION – PAST PERFORMACE
(Continued)

6. Customer Satisfaction: Evaluators shall carefully review the information provided in the completed questionnaires to ascertain a level of customer satisfaction with the Offeror's cooperation and interactions on the past contracts. Based on that review, provide a rating for the Offeror's cooperation on the past contracts below. Include a listing of any apparent weaknesses or strengths of the Offeror.

/__/ Outstanding

/__/ Above Average

/__ / Satisfactory

/__ / Marginal

/__ / Unsatisfactory

6.1 Strengths: Include a listing of any identified or obvious strengths of the offeror with respect to Offeror Customer Satisfaction.

6.2 Weaknesses: Include a listing of any identified or obvious weaknesses of the offeror with respect to Offeror Customer Satisfaction.

6.3 Other: Include any other comments/rationale to support the overall rating provided for this Offeror.

Offeror: _____

Evaluator: _____

PROPOSAL RATING WORKSHEET
FACTOR 1
CONSTRUCTION – PAST PERFORMACE
(Continued)

7. Subcontractor Management: Evaluators shall carefully review the information provided in the completed questionnaires to ascertain a level of customer satisfaction with the Offeror's Management of Subcontractors on the past contracts. Based on that review, provide a rating for the Offeror's Subcontractor Management Skills on the past contracts below. Include a listing of any apparent weaknesses or strengths of the Offeror.

/__/ Outstanding

/__/ Above Average

/__ / Satisfactory

/__ / Marginal

/__ / Unsatisfactory

7.1 Strengths: Include a listing of any identified or obvious strengths of the offeror with respect to Offeror Subcontractor Management.

7.2 Weaknesses: Include a listing of any identified or obvious weaknesses of the offeror with respect to Offeror Subcontractor Management.

7.3 Other: Include any other comments/rationale to support the overall rating provided for this Offeror.

Offeror: _____

Evaluator: _____

PROPOSAL RATING WORKSHEET
FACTOR 1
CONSTRUCTION – PAST PERFORMACE
(Continued)

Factor 1 Past Performance Overall Rating

FACTOR 1-1 SUMMARY RATING CHART			
Item No.	Description	Rating*	Comments
1.	Questionnaire Receipt	YES/NO	
2.	CCASS Rating		
3.	Personal Experience	N/A	No rating permitted here
4.	Quality of Construction		
5.	Timeliness of Performance		
6.	Customer Satisfaction		
7.	Sub-Contractor Management		
OVERALL FACTOR 1 RATING**			

* Ratings may be either:

Outstanding – Above Average – Satisfactory – Marginal – Unsatisfactory

** Evaluators shall consider the ratings in the various items shown to determine a suitable overall rating.

Offeror: _____

Evaluator: _____

PROPOSAL RATING WORKSHEET
FACTOR 2
CONSTRUCTION – EXPERIENCE

1. General: The Government will evaluate the depth and breadth of the Offeror's corporate experience on the basis of the number of times it has performed projects that were similar in nature, size, scope, and complexity as the work required by this RFP. Completed Project Information Sheets shall be used as a basis to begin the evaluation of this factor.

Has the Government received completed Project Information Sheets for Experience for this Offeror?

____ YES ___ NO

COMMENTS:

Do all the Project Information Sheets received reflect projects completed or substantially completed within the last 3 years?

____YES ____NO

COMMENTS:

2. Offeror Similar Construction Projects Completed: The number and size of projects completed of similar scope required by this RFP in the last three (3) years.

/__/ Outstanding

/__/ Above Average

/__ / Satisfactory

/__ / Marginal

/__ / Unsatisfactory

2.1 Strengths: Include a listing of any identified or obvious strengths of the offeror with respect to experience.

2.2 Weaknesses: Include a listing of any identified or obvious weaknesses of the offeror with respect to experience.

2.3 Other: Include any other comments/rationale to support the overall rating provided for this Offeror.

Offeror: _____

Evaluator: _____

SUMMARY RATING CHART			
Factor	Description	Rating*	Comments
1	CONSTRUCTION – PAST PERFORMANCE		
2	CONSTRUCTION – EXPERIENCE		
OVERALL PROPOSAL RATING			

* Ratings may be either:

Outstanding – Above Average – Satisfactory – Marginal – Unsatisfactory

Offeror: _____

CONSENSUS SUMMARY RATING CHART					
Factor	Description	Board Member 1	Board Member 2	Board Member 3	CONSENSUS
1	CONSTRUCTION – PAST PERFORMANCE				
2	CONSTRUCTION – EXPERIENCE				
OVERALL PROPOSAL RATING					
Ratings may be either: Outstanding – Above Average – Satisfactory – Marginal – Unsatisfactory					

_____ _____
Board Member 1 Board Member 2

_____ _____
Board Member 3 Board Chairperson

CLAUSES INCORPORATED BY FULL TEXT

52.204-6 DATA UNIVERSAL NUMBERING SYSTEM (DUNS) NUMBER (JUN 99)

(a) The offeror shall enter, in the block with its name and address on the cover page of its offer, the annotation "DUNS" followed by the DUNS number that identifies the offeror's name and address exactly as stated in the offer.

(b) If the offeror does not have a DUNS number, it should contact Dun and Bradstreet directly to obtain one. A DUNS number will be provided immediately by telephone at no charge to the offeror. For information on obtaining a DUNS number, the offeror, if located within the United States, should call Dun and Bradstreet at 1-800-333-0505. The offeror should be prepared to provide the following information:

(1) Company name.

(2) Company address.

(3) Company telephone number.

(4) Line of business.

(5) Chief executive officer/key manager.

(6) Date the company was started.

(7) Number of people employed by the company.

(8) Company affiliation.

(c) Offerors located outside the United States may obtain the location and phone number of the local Dun and Bradstreet Information Services office from the Internet Home Page at http://www.customerservice@dnb.com. If an offeror is unable to locate a local service center, it may send an e-mail to Dun and Bradstreet at globalinfo@mail.dnb.com.

(End of provision)

52.211-2 AVAILABILITY OF SPECIFICATIONS LISTED IN THE DOD INDEX OF SPECIFICATIONS AND STANDARDS (DODISS) AND DESCRIPTIONS LISTED IN THE ACQUISITION MANAGEMENT SYSTEMS AND DATA REQUIREMENTS CONTROL LIST, DOD 5010.12-L (DEC 1999)

Copies of specifications, standards, and data item descriptions cited in this solicitation may be obtained--

(a) From the ASSIST database via the Internet at http://assist.daps.mil; or

(b) By submitting a request to the--Department of Defense Single Stock Point (DoDSSP), Building 4, Section D, 700 Robbins Avenue, Philadelphia, PA 19111-5094, Telephone (215) 697-2667/2179, Facsimile (215) 697-1462.

(End of provision)

52.211-14 NOTICE OF PRIORITY RATING FOR NATIONAL DEFENSE USE (SEP 1990)

Any contract awarded as a result of this solicitation will be DO rated order certified for national defense use under the Defense Priorities and Allocations System (DPAS) (15 CFR 700), and the Contractor will be required to follow all of the requirements of this regulation. [Contracting Officer check appropriate box.]

(End of provision)

52.214-5000 APPARENT CLERICAL MISTAKES (MAR 1995)--EFARS

(a) For the purpose of initial evaluations of bids, the following will be utilized in the resolving arithmetic discrepancies found on the face of bidding schedule as submitted by the bidder:

(1) Obviously misplaced decimal points will be corrected;
(2) Discrepancy between unit price and extended price, the unit price will govern;
(3) Apparent errors in extension of unit prices will be corrected;
(4) Apparent errors in addition of lump-sum and extended prices will be corrected.

(b) For the purpose of bid evaluation, the government will proceed on the assumption that the bidder intends his bid to be evaluated on basis of the unit prices, the totals arrived at by resolution of arithmetic discrepancies as provided above and the bid will be so reflected on the abstract of bids.

(c) These correction procedures shall not be used to resolve any ambiguity concerning which bid is low.

(End of statement)

52.215-1 INSTRUCTIONS TO OFFERORS--COMPETITIVE ACQUISITION (MAY 2001)

(a) Definitions. As used in this provision--

“Discussions” are negotiations that occur after establishment of the competitive range that may, at the Contracting Officer's discretion, result in the offeror being allowed to revise its proposal.

“In writing or written” means any worded or numbered expression which can be read, reproduced, and later communicated, and includes electronically transmitted and stored information.

“Proposal modification” is a change made to a proposal before the solicitation's closing date and time, or made in response to an amendment, or made to correct a mistake at any time before award.

“Proposal revision” is a change to a proposal made after the solicitation closing date, at the request of or as allowed by a Contracting Officer as the result of negotiations.

“Time”, if stated as a number of days, is calculated using calendar days, unless otherwise specified, and will include Saturdays, Sundays, and legal holidays. However, if the last day falls on a Saturday, Sunday, or legal holiday, then the period shall include the next working day.

(b) Amendments to solicitations. If this solicitation is amended, all terms and conditions that are not amended remain unchanged. Offerors shall acknowledge receipt of any amendment to this solicitation by the date and time specified in the amendment(s).

(c) Submission, modification, revision, and withdrawal of proposals. (1) Unless other methods (e.g., electronic commerce or facsimile) are permitted in the solicitation, proposals and modifications to proposals shall be submitted in paper media in sealed envelopes or packages (i) addressed to the office specified in the solicitation, and (ii) showing the time and date specified for receipt, the solicitation number, and the name and address of the offeror. Offerors using commercial carriers should ensure that the proposal is marked on the outermost wrapper with the information in paragraphs (c)(1)(i) and (c)(1)(ii) of this provision.

(2) The first page of the proposal must show--

(i) The solicitation number;

(ii) The name, address, and telephone and facsimile numbers of the offeror (and electronic address if available);

(iii) A statement specifying the extent of agreement with all terms, conditions, and provisions included in the solicitation and agreement to furnish any or all items upon which prices are offered at the price set opposite each item;

(iv) Names, titles, and telephone and facsimile numbers (and electronic addresses if available) of persons authorized to negotiate on the offeror's behalf with the Government in connection with this solicitation; and

(v) Name, title, and signature of person authorized to sign the proposal. Proposals signed by an agent shall be accompanied by evidence of that agent's authority, unless that evidence has been previously furnished to the issuing office.

(3) Submission, modification, or revision, of proposals.

(i) Offerors are responsible for submitting proposals, and any modifications, or revisions, so as to reach the Government office designated in the solicitation by the time specified in the solicitation. If no time is specified in the solicitation, the time for receipt is 4:30 p.m., local time, for the designated Government office on the date that proposal or revision is due.

(ii)(A) Any proposal, modification, or revision received at the Government office designated in the solicitation after the exact time specified for receipt of offers is “late” and will not be considered unless it is received before award is made, the Contracting Officer determines that accepting the late offer would not unduly delay the acquisition; and--

(1) If it was transmitted through an electronic commerce method authorized by the solicitation, it was received at the initial point of entry to the Government infrastructure not later than 5:00 p.m. one working day prior to the date specified for receipt of proposals; or

(2) There is acceptable evidence to establish that it was received at the Government installation designated for receipt of offers and was under the Government's control prior to the time set for receipt of offers; or

(3) It is the only proposal received.

(B) However, a late modification of an otherwise successful proposal that makes its terms more favorable to the Government, will be considered at any time it is received and may be accepted.

(iii) Acceptable evidence to establish the time of receipt at the Government installation includes the time/date stamp of that installation on the proposal wrapper, other documentary evidence of receipt maintained by the installation, or oral testimony or statements of Government personnel.

(iv) If an emergency or unanticipated event interrupts normal Government processes so that proposals cannot be received at the office designated for receipt of proposals by the exact time specified in the solicitation, and urgent Government requirements preclude amendment of the solicitation, the time specified for receipt of proposals will be deemed to be extended to the same time of day specified in the solicitation on the first work day on which normal Government processes resume.

(v) Proposals may be withdrawn by written notice received at any time before award. Oral proposals in response to oral solicitations may be withdrawn orally. If the solicitation authorizes facsimile proposals, proposals may be withdrawn via facsimile received at any time before award, subject to the conditions specified in the provision at 52.215-5, Facsimile Proposals. Proposals may be withdrawn in person by an offeror or an authorized representative, if the identity of the person requesting withdrawal is established and the person signs a receipt for the proposal before award.

(4) Unless otherwise specified in the solicitation, the offeror may propose to provide any item or combination of items.

(5) Offerors shall submit proposals in response to this solicitation in English, unless otherwise permitted by the solicitation, and in U.S. dollars, unless the provision at FAR 52.225-17, Evaluation of Foreign Currency Offers, is included in the solicitation.

(6) Offerors may submit modifications to their proposals at any time before the solicitation closing date and time, and may submit modifications in response to an amendment, or to correct a mistake at any time before award.

(7) Offerors may submit revised proposals only if requested or allowed by the Contracting Officer.

(8) Proposals may be withdrawn at any time before award. Withdrawals are effective upon receipt of notice by the Contracting Officer.

(d) Offer expiration date. Proposals in response to this solicitation will be valid for the number of days specified on the solicitation cover sheet (unless a different period is proposed by the offeror).

(e) Restriction on disclosure and use of data. Offerors that include in their proposals data that they do not want disclosed to the public for any purpose, or used by the Government except for evaluation purposes, shall--

(1) Mark the title page with the following legend: This proposal includes data that shall not be disclosed outside the Government and shall not be duplicated, used, or disclosed--in whole or in part--for any purpose other than to evaluate this proposal. If, however, a contract is awarded to this offeror as a result of--or in connection with-- the submission of this data, the Government shall have the right to duplicate, use, or disclose the data to the extent provided in the resulting contract. This restriction does not limit the Government's right to use information contained in this data if it is obtained from another source without restriction. The data subject to this restriction are contained in sheets [insert numbers or other identification of sheets]; and

(2) Mark each sheet of data it wishes to restrict with the following legend: Use or disclosure of data contained on this sheet is subject to the restriction on the title page of this proposal.

(f) Contract award. (1) The Government intends to award a contract or contracts resulting from this solicitation to the responsible offeror(s) whose proposal(s) represents the best value after evaluation in accordance with the factors and subfactors in the solicitation.

(2) The Government may reject any or all proposals if such action is in the Government's interest.

(3) The Government may waive informalities and minor irregularities in proposals received.

(4) The Government intends to evaluate proposals and award a contract without discussions with offerors (except clarifications as described in FAR 15.306(a)). Therefore, the offeror's initial proposal should contain the offeror's best terms from a cost or price and technical standpoint. The Government reserves the right to conduct discussions if the Contracting Officer later determines them to be necessary. If the Contracting Officer determines that the number of proposals that would otherwise be in the competitive range exceeds the number at which an efficient competition can be conducted, the Contracting Officer may limit the number of proposals in the competitive range to the greatest number that will permit an efficient competition among the most highly rated proposals.

(5) The Government reserves the right to make an award on any item for a quantity less than the quantity offered, at the unit cost or prices offered, unless the offeror specifies otherwise in the proposal.

(6) The Government reserves the right to make multiple awards if, after considering the additional administrative costs, it is in the Government's best interest to do so.

(7) Exchanges with offerors after receipt of a proposal do not constitute a rejection or counteroffer by the Government.

(8) The Government may determine that a proposal is unacceptable if the prices proposed are materially unbalanced between line items or subline items. Unbalanced pricing exists when, despite an acceptable total evaluated price, the price of one or more contract line items is significantly overstated or understated as indicated by the application of cost or price analysis techniques. A proposal may be rejected if the Contracting Officer determines that the lack of balance poses an unacceptable risk to the Government.

(9) If a cost realism analysis is performed, cost realism may be considered by the source selection authority in evaluating performance or schedule risk.

(10) A written award or acceptance of proposal mailed or otherwise furnished to the successful offeror within the time specified in the proposal shall result in a binding contract without further action by either party.

(11) The Government may disclose the following information in postaward debriefings to other offerors:

(i) The overall evaluated cost or price and technical rating of the successful offeror;

(ii) The overall ranking of all offerors, when any ranking was developed by the agency during source selection;

(iii) A summary of the rationale for award; and

(iv) For acquisitions of commercial items, the make and model of the item to be delivered by the successful offeror.

(End of provision)

52.216-1 TYPE OF CONTRACT (APR 1984)

The Government contemplates award of a firm-fixed price contract resulting from this solicitation.

(End of clause)

52.217-5 EVALUATION OF OPTIONS (JUL 1990)

(a) Except when it is determined in accordance with FAR 17.206(b) not to be in the Government's best interests, the Government will evaluate offers for award purposes by adding the total price for all options to the total price for the basic requirement. Evaluation of options will not obligate the Government to exercise the option(s).

(b) The Government may reject an offer as nonresponsive if it is materially unbalanced as to prices for the basic requirement and the option quantities. An offer is unbalanced when it is based on prices significantly less than cost for some work and prices which are significantly overstated for other work.

(End of provision)

52.219-4001 SUBCONTRACTING PLAN FOR SMALL BUSINESS CONCERNS
(SEP 2002 CESAS-CT)

(a) In accordance with FAR Clause 52.219-9, large businesses must submit a subcontracting plan. A sample subcontracting plan is located in Section 00800.

(b) The subcontracting targets (expressed in terms of percentages of total planned subcontracting dollars) of the Savannah District are as follows:

Small Business	-	57.2%
Small Disadvantaged Business	-	8.9%
HUBZone Small Business		3.0%
Women-Owned Business	-	8.1%
Veteran-Owned Small Business		0%*
Service-Disabled Veteran-Owned Small Business	-	3.0%**

If you cannot reach the above-stated targets, you must provide written justification with your subcontracting plan detailing the reasons you cannot meet the requirements.

*(c) While Savannah District does not have a specific target for subcontracting with Veteran-Owned small businesses, this must be addressed in any subcontracting plan.

**(d) Service-disabled Veteran-owned Small Business (SD/VOSB) is a composite of Veteran-Owned Small Business. The SD/VOSB target must be included in the Veteran-Owned small business target.

52.222-23 NOTICE OF REQUIREMENT FOR AFFIRMATIVE ACTION TO ENSURE EQUAL EMPLOYMENT OPPORTUNITY FOR CONSTRUCTION (FEB 1999)

(a) The offeror's attention is called to the Equal Opportunity clause and the Affirmative Action Compliance Requirements for Construction clause of this solicitation.

(b) The goals for minority and female participation, expressed in percentage terms for the Contractor's aggregate workforce in each trade on all construction work in the covered area, are as follows:

Goals for minority participation for each trade	Goals for female participation for each trade

6.9	26.2

These goals are applicable to all the Contractor's construction work performed in the covered area. If the Contractor performs construction work in a geographical area located outside of the covered area, the Contractor shall apply the goals established for the geographical area where the work is actually performed. Goals are published periodically in the Federal Register in notice form, and these notices may be obtained from any Office of Federal Contract Compliance Programs office.

(c) The Contractor's compliance with Executive Order 11246, as amended, and the regulations in 41 CFR 60-4 shall be based on (1) its implementation of the Equal Opportunity clause, (2) specific affirmative action obligations required by the clause entitled "Affirmative Action Compliance Requirements for Construction," and (3) its efforts to meet the goals. The hours of minority and female employment and training must be substantially uniform throughout the length of the contract, and in each trade. The Contractor shall make a good faith effort to employ minorities and women evenly on each of its projects. The transfer of minority or female employees or trainees from Contractor to Contractor, or from project to project, for the sole purpose of meeting the Contractor's goals shall be a violation of the contract, Executive Order 11246, as amended, and the regulations in 41 CFR 60-4. Compliance with the goals will be measured against the total work hours performed.

(d) The Contractor shall provide written notification to the Deputy Assistant Secretary for Federal Contract Compliance, U.S. Department of Labor, within 10 working days following award of any construction subcontract in excess of $10,000 at any tier for construction work under the contract resulting from this solicitation. The notification shall list the --

(1) Name, address, and telephone number of the subcontractor;

(2) Employer's identification number of the subcontractor;

(3) Estimated dollar amount of the subcontract;

(4) Estimated starting and completion dates of the subcontract; and

(5) Geographical area in which the subcontract is to be performed.

(e) As used in this Notice, and in any contract resulting from this solicitation, the "covered area" is North Carolina, Cumberland, Fayetteville

(End of provision)

52.225-12 NOTICE OF BUY AMERICAN ACT REQUIREMENT-- CONSTRUCTION MATERIALS UNDER TRADE AGREEMENTS (MAY 2002)

(a) Definitions. Construction material, designated country construction material, domestic construction material, foreign construction material, and NAFTA country construction material, as used in this provision, are defined in the clause of this solicitation entitled “Buy American Act --Construction Materials under Trade Agreements” (Federal Acquisition Regulation (FAR) clause 52.225-11).

(b) Requests for determination of inapplicability. An offeror requesting a determination regarding the inapplicability of the Buy American Act should submit the request to the Contracting Officer in time to allow a determination before submission of offers. The offeror shall include the information and applicable supporting data required by paragraphs (c) and (d) of FAR clause 52.225-11 in the request. If an offeror has not requested a determination regarding the

inapplicability of the Buy American Act before submitting its offer, or has not received a response to a previous request, the offeror shall include the information and supporting data in the offer.

(c) Evaluation of offers. (1) The Government will evaluate an offer requesting exception to the requirements of the Buy American Act, based on claimed unreasonable cost of domestic construction materials, by adding to the offered price the appropriate percentage of the cost of such foreign construction material, as specified in paragraph (b)(4)(i) of FAR clause 52.225-11.

(2) If evaluation results in a tie between an offeror that requested the substitution of foreign construction material based on unreasonable cost and an offeror that did not request an exception, the Contracting Officer will award to the offeror that did not request an exception based on unreasonable cost.

(d) Alternate offers. (1) When an offer includes foreign construction material, other than designated country or NAFTA country construction material, that is not listed by the Government in this solicitation in paragraph (b)(3) of FAR clause 52.225-11, the offeror also may submit an alternate offer based on use of equivalent domestic, designated country, or NAFTA country construction material.

(2) If an alternate offer is submitted, the offeror shall submit a separate Standard Form 1442 for the alternate offer, and a separate price comparison table prepared in accordance with paragraphs (c) and (d) of FAR clause 52.225-11 for the offer that is based on the use of any foreign construction material for which the Government has not yet determined an exception applies.

(3) If the Government determines that a particular exception requested in accordance with paragraph (c) of FAR clause 52.225-11 does not apply, the Government will evaluate only those offers based on use of the equivalent domestic, designated country, or NAFTA country construction material, and the offeror shall be required to furnish such domestic, designated country, or NAFTA country construction material. An offer based on use of the foreign construction material for which an exception was requested--

(i) Will be rejected as nonresponsive if this acquisition is conducted by sealed bidding; or

(ii) May be accepted if revised during negotiations.

(End of provision)

52.232-4006 SUBJECT TO AVAILABILITY OF FUNDS STATEMENT (SEP 1999 SASCT) (Ref. AFARS 5101.602-2)

This is a high priority requirement as defined in Army Federal Acquisition Regulation (AFAR) Supplement 5101.602-2. Subject to the availability of funds, the accounting classification will be 21 3 2050 308-8021 P7000 3230 S09133. This statement is not a commitment of funds. Funds are not presently available for this acquisition. No contract award will be made until appropriated funds are made available from which payment for contract purposes can be made.
(End of provision)

52.233-2 SERVICE OF PROTEST (AUG 1996)

(v) Protests, as defined in section 33.101 of the Federal Acquisition Regulation, that are filed directly with an agency, and copies of any protests that are filed with the General Accounting Office (GAO), shall be served on the Contracting Officer (addressed as follows) by obtaining written and dated acknowledgment of receipt from

U.S. Army Corps of Engineers, Savannah District
ATTN: Contracting Officer, CESAS-CT-C
100 West Oglethorpe Ave
Savannah, Georgia 31401-3640

(b) The copy of any protest shall be received in the office designated above within one day of filing a protest with the GAO.

(End of provision)

52.236-27 SITE VISIT (CONSTRUCTION) (FEB 1995)

(a) The clauses at 52.236-2, Differing Site Conditions, and 52.236-3, Site Investigations and Conditions Affecting the Work, will be included in any contract awarded as a result of this solicitation. Accordingly, offerors or quoters are urged and expected to inspect the site where the work will be performed.

(b) Site visits may be arranged during normal duty hours by contacting:
Name: Daniel H. Davis, P.E.
Address: 527 Interceptor Rd., Pope AFB, NC 28308
Telephone: 910-907-3130

(End of provision)

52.236-28 PREPARATION OF PROPOSALS--CONSTRUCTION (OCT 1997)

(a) Proposals must be (1) submitted on the forms furnished by the Government or on copies of those forms, and (2) manually signed. The person signing a proposal must initial each erasure or change appearing on any proposal form.

(b) The proposal form may require offerors to submit proposed prices for one or more items on various bases, including--

(1) Lump sum price;

(2) Alternate prices;

(3) Units of construction; or

(4) Any combination of paragraphs (b)(1) through (b)(3) of this provision.

(c) If the solicitation requires submission of a proposal on all items, failure to do so may result in the proposal being rejected without further consideration. If a proposal on all items is not required, offerors should insert the words “no proposal” in the space provided for any item on which no price is submitted.

(d) Alternate proposals will not be considered unless this solicitation authorizes their submission.

(End of provision)

52.236-4011 Disclosure of Magnitude of Construction (FAR 36.204 and DFARS 236.204)

The estimated price range for this project is between

$10,000,000.00 and $25,000,000.00 .

Section 00600 - Representations & Certifications

CLAUSES INCORPORATED BY REFERENCE

52.222-38	Compliance With Veterans' Employment Reporting Requirements	DEC 2001

CLAUSES INCORPORATED BY FULL TEXT

52.203-2 CERTIFICATE OF INDEPENDENT PRICE DETERMINATION (APR 1985)

(a) The offeror certifies that --

(1) The prices in this offer have been arrived at independently, without, for the purpose of restricting competition, any consultation, communication, or agreement with any other offeror or competitor relating to –

(i) Those prices,

(ii) The intention to submit an offer, or

(iii) The methods of factors used to calculate the prices offered:

(2) The prices in this offer have not been and will not be knowingly disclosed by the offeror, directly or indirectly, to any other offeror or competitor before bid opening (in the case of a sealed bid solicitation) or contract award (in the case of a negotiated solicitation) unless otherwise required by law; and

(3) No attempt has been made or will be made by the offeror to induce any other concern to submit or not to submit an offer for the purpose of restricting competition.

(b) Each signature on the offer is considered to be a certification by the signatory that the signatory --

(1) Is the person in the offeror's organization responsible for determining the prices offered in this bid or proposal, and that the signatory has not participated and will not participate in any action contrary to subparagraphs (a)(1) through (a)(3) of this provision; or

(2) (i) Has been authorized, in writing, to act as agent for the following principals in certifying that those principals have not participated, and will not participate in any action contrary to subparagraphs (a)(1) through (a)(3) of this provison _____ (insert full name of person(s) in the offeror's organization responsible for determining the prices offered in this bid or proposal, and the title of his or her position in the offeror's organization);

(ii) As an authorized agent, does certify that the principals named in subdivision (b)(2)(i) above have not participated, and will not participate, in any action contrary to subparagraphs (a)(1) through (a)(3) above; and

(iii) As an agent, has not personally participated, and will not participate, in any action contrary to subparagraphs (a)(1) through (a)(3) of this provision.

(c) If the offeror deletes or modifies subparagraph (a)(2) of this provision, the offeror must furnish with its offer a signed statement setting forth in detail the circumstances of the disclosure.

(End of clause)

52.203-11 CERTIFICATION AND DISCLOSURE REGARDING PAYMENTS TO INFLUENCE CERTAIN FEDERAL TRANSACTIONS (APR 1991)

(a) The definitions and prohibitions contained in the clause, at FAR 52.203-12, Limitation on Payments to Influence Certain Federal Transactions, included in this solicitation, are hereby incorporated by reference in paragraph (b) of this Certification.

(b) The offeror, by signing its offer, hereby certifies to the best of his or her knowledge and belief that on or after December 23, 1989,--

(1) No Federal appropriated funds have been paid or will be paid to any person for influencing or attempting to influence an officer or employee of any agency, a Member of Congress, an officer or employee of Congress, or an employee of a Member of Congress on his or her behalf in connection with the awarding of any Federal contract, the making of any Federal grant, the making of any Federal loan, the entering into of any cooperative agreement, and the extension, continuation, renewal, amendment or modification of any Federal contract, grant, loan, or cooperative agreement;

(2) If any funds other than Federal appropriated funds (including profit or fee received under a covered Federal transaction) have been paid, or will be paid to any person for influencing or attempting to influence an officer or employee of any agency, a Member of Congress, an officer or employee of Congress or an employee of a Member of Congress on his or her behalf in connection with this solicitation, the offeror shall complete and submit, with its offer, OMB standard form LLL, Disclosure of Lobbying Activities, to the Contracting Officer; and

(3) He or she will include the language of this certification in all subcontract awards at any tier and require that all recipients of subcontract awards in excess of $100,000 shall certify and disclose accordingly.

(vi) Submission of this certification and disclosure is a prerequisite for making or entering into this contract imposed by section 1352, title 31, United States Code. Any person who makes an expenditure prohibited under this provision, shall be subject to a civil penalty of not less than $10,000, and not more than $100,000, for each such failure.

(End of provision)

52.204-5 WOMEN-OWNED BUSINESS (OTHER THAN SMALL BUSINESS) (MAY 1999)

(a) Definition. Women-owned business concern, as used in this provision, means a concern that is at least 51 percent owned by one or more women; or in the case of any publicly owned business, at least 51 percent of its stock is owned by one or more women; and whose management and daily business operations are controlled by one or more women.

(b) Representation. [Complete only if the offeror is a women-owned business concern and has not represented itself as a small business concern in paragraph (b)(1) of FAR 52.219-1, Small Business Program Representations, of this solicitation.] The offeror represents that it ( ) is a women-owned business concern.

(End of provision)

52.204-4003 TAXPAYER IDENTIFICATION

Taxpayer Identification Number (TIN)," as used in this provision, means the number required by the Internal Revenue Service (IRS) to be used by the offeror in reporting income tax and other returns. The TIN may be either a Social Security Number or an Employer Identification Number.

(a) Taxpayer Identification Number (TIN).

___ TIN:._____

___ TIN has been applied for.

___ TIN is not required because:

___ Offeror is a nonresident alien, foreign corporation, or foreign partnership that does not have income effectively connected with the conduct of a trade or business in the United States and does not have an office or place of business or a fiscal paying agent in the United States;

___ Offeror is an agency or instrumentality of a foreign government;

___ Offeror is an agency or instrumentality of the Federal Government.

(b) Type of organization.

___ Sole proprietorship;

___ Partnership;

___ Corporate entity (not tax-exempt);

___ Corporate entity (tax-exempt);

___ Government entity (Federal, State, or local);

___ Foreign government;

___ International organization per 26 CFR 1.6049-4;

___ Other _____

(c) Common parent.

___ Offeror is not owned or controlled by a common parent

___ Name and TIN of common parent:

Name _____

TIN _____

(End of provision)

52.209-5 CERTIFICATION REGARDING DEBARMENT, SUSPENSION, PROPOSED DEBARMENT, AND OTHER RESPONSIBILITY MATTERS (DEC 2001)

(a)(1) The Offeror certifies, to the best of its knowledge and belief, that--

(i) The Offeror and/or any of its Principals--

(A) Are ( ) are not ( ) presently debarred, suspended, proposed for debarment, or declared ineligible for the award of contracts by any Federal agency;

(B) Have ( ) have not ( ), within a three-year period preceding this offer, been convicted of or had a civil judgment rendered against them for: commission of fraud or a criminal offense in connection with obtaining, attempting to obtain, or performing a public (Federal, state, or local) contract or subcontract; violation of Federal or state antitrust statutes relating to the submission of offers; or commission of embezzlement, theft, forgery, bribery, falsification or destruction of records, making false statements, tax evasion, or receiving stolen property; and

(C) Are ( ) are not ( ) presently indicted for, or otherwise criminally or civilly charged by a governmental entity with, commission of any of the offenses enumerated in subdivision (a)(1)(i)(B) of this provision.

(ii) The Offeror has ( ) has not ( ), within a three-year period preceding this offer, had one or more contracts terminated for default by any Federal agency.

(2) "Principals," for the purposes of this certification, means officers; directors; owners; partners; and, persons having primary management or supervisory responsibilities within a business entity (e.g., general manager; plant manager; head of a subsidiary, division, or business segment, and similar positions).

THIS CERTIFICATION CONCERNS A MATTER WITHIN THE JURISDICTION OF AN AGENCY OF THE UNITED STATES AND THE MAKING OF A FALSE, FICTITIOUS, OR FRAUDULENT CERTIFICATION MAY RENDER THE MAKER SUBJECT TO PROSECUTION UNDER SECTION 1001, TITLE 18, UNITED STATES CODE.

(b) The Offeror shall provide immediate written notice to the Contracting Officer if, at any time prior to contract award, the Offeror learns that its certification was erroneous when submitted or has become erroneous by reason of changed circumstances.

(c) A certification that any of the items in paragraph (a) of this provision exists will not necessarily result in withholding of an award under this solicitation. However, the certification will be considered in connection with a determination of the Offeror's responsibility. Failure of the Offeror to furnish a certification or provide such additional information as requested by the Contracting Officer may render the Offeror nonresponsible.

(d) Nothing contained in the foregoing shall be construed to require establishment of a system of records in order to render, in good faith, the certification required by paragraph (a) of this provision. The knowledge and information of an Offeror is not required to exceed that which is normally possessed by a prudent person in the ordinary course of business dealings.

(e) The certification in paragraph (a) of this provision is a material representation of fact upon which reliance was placed when making award. If it is later determined that the Offeror knowingly rendered an erroneous certification, in addition to other remedies available to the Government, the Contracting Officer may terminate the contract resulting from this solicitation for default.

(End of provision)

52.219-1 SMALL BUSINESS PROGRAM REPRESENTATIONS (APR 2002) - ALTERNATE I (APR 2002)

(a)(1) The North American Industry Classification System (NAICS) code for this acquisition is 237310.

(2) The small business size standard is 28.5 M.

(3) The small business size standard for a concern which submits an offer in its own name, other than on a construction or service contract, but which proposes to furnish a product which it did not itself manufacture, is 500 employees.

(b) Representations. (1) The offeror represents as part of its offer that it ( ) is, ( ) is not a small business concern.

(2) (Complete only if the offeror represented itself as a small business concern in paragraph (b)(1) of this provision.) The offeror represents, for general statistical purposes, that it ( ) is, ( ) is not a small disadvantaged business concern as defined in 13 CFR 124.1002.

(3) (Complete only if the offeror represented itself as a small business concern in paragraph (b)(1) of this provision.) The offeror represents as part of its offer that it ( ) is, ( ) is not a women-owned small business concern.

(4) (Complete only if the offeror represented itself as a small business concern in paragraph (b)(1) of this provision.) The offeror represents as part of its offer that it ( ) is, ( ) is not a veteran-owned small business concern.

(5) (Complete only if the offeror represented itself as a veteran-owned small business concern in paragraph (b)(4) of this provision.) The offeror represents as part of its offer that it ( ) is, ( ) is not a service-disabled veteran-owned small business concern.

(6) [Complete only if the offeror represented itself as a small business concern in paragraph (b)(1) of this provision.] The offeror represents, as part of its offer, that--

(i) It ( ) is, ( ) is not a HUBZone small business concern listed, on the date of this representation, on the List of Qualified HUBZone Small Business Concerns maintained by the Small Business Administration, and no material change in ownership and control, principal office, or HUBZone employee percentage has occurred since it was certified by the Small Business Administration in accordance with 13 CFR part 126; and

(ii) It ( ) is, ( ) is not a joint venture that complies with the requirements of 13 CFR part 126, and the representation in paragraph (b)(6)(i) of this provision is accurate for the HUBZone small business concern or concerns that are participating in the joint venture. (The offeror shall enter the name or names of the HUBZone small business concern or concerns that are participating in the joint venture:_____.) Each HUBZone small business concern participating in the joint venture shall submit a separate signed copy of the HUBZone representation.

(7) (Complete if offeror represented itself as disadvantaged in paragraph (b)(2) of this provision.) The offeror shall check the category in which its ownership falls:

____ Black American.

____ Hispanic American.

____ Native American (American Indians, Eskimos, Aleuts, or Native Hawaiians).

____ Asian-Pacific American (persons with origins from Burma, Thailand, Malaysia, Indonesia, Singapore, Brunei, Japan, China, Taiwan, Laos, Cambodia (Kampuchea), Vietnam, Korea, The Philippines, U.S. Trust Territory of the Pacific Islands (Republic of Palau), Republic of the Marshall Islands, Federated States of Micronesia, the Commonwealth of the Northern Mariana Islands, Guam, Samoa, Macao, Hong Kong, Fiji, Tonga, Kiribati, Tuvalu, or Nauru).

____ Subcontinent Asian (Asian-Indian) American (persons with origins from India, Pakistan, Bangladesh, Sri Lanka, Bhutan, the Maldives Islands, or Nepal).

____ Individual/concern, other than one of the preceding.

(c) Definitions. As used in this provision--

Service-disabled veteran-owned small business concern--

(1) Means a small business concern--

(i) Not less than 51 percent of which is owned by one or more service-disabled veterans or, in the case of any publicly owned business, not less than 51 percent of the stock of which is owned by one or more service-disabled veterans; and

(ii) The management and daily business operations of which are controlled by one or more service-disabled veterans or, in the case of a veteran with permanent and severe disability, the spouse or permanent caregiver of such veteran.

(2) Service-disabled veteran means a veteran, as defined in 38 U.S.C. 101(2), with a disability that is service-connected, as defined in 38 U.S.C. 101(16).

"Small business concern," means a concern, including its affiliates, that is independently owned and operated, not dominant in the field of operation in which it is bidding on Government contracts, and qualified as a small business under the criteria in 13 CFR Part 121 and the size standard in paragraph (a) of this provision.

Veteran-owned small business concern means a small business concern--

(1) Not less than 51 percent of which is owned by one or more veterans (as defined at 38 U.S.C. 101(2)) or, in the case of any publicly owned business, not less than 51 percent of the stock of which is owned by one or more veterans; and

(2) The management and daily business operations of which are controlled by one or more veterans.

"Women-owned small business concern," means a small business concern --

(1) That is at least 51 percent owned by one or more women or, in the case of any publicly owned business, at least 51 percent of the stock of which is owned by one or more women; or

(2) Whose management and daily business operations are controlled by one or more women.

(d) Notice.

(1) If this solicitation is for supplies and has been set aside, in whole or in part, for small business concerns, then the clause in this solicitation providing notice of the set-aside contains restrictions on the source of the end items to be furnished.

(2) Under 15 U.S.C. 645(d), any person who misrepresents a firm's status as a small, HUBZone small, small disadvantaged, or women-owned small business concern in order to obtain a contract to be awarded under the preference programs established pursuant to section 8(a), 8(d), 9, or 15 of the Small Business Act or any other provision of Federal law that specifically references section 8(d) for a definition of program eligibility, shall--

(i) Be punished by imposition of fine, imprisonment, or both;

(ii) Be subject to administrative remedies, including suspension and debarment; and

(iii) Be ineligible for participation in programs conducted under the authority of the Act.

(End of provision)

52.219-19 SMALL BUSINESS CONCERN REPRESENTATION FOR THE SMALL BUSINESS COMPETITIVENESS DEMONSTRATION PROGRAM (OCT 2000)

(a) Definition.

"Emerging small business" as used in this solicitation, means a small business concern whose size is no greater than 50 percent of the numerical size standard applicable to the North American Industry Classification System (NAICS) code assigned to a contracting opportunity.

(b) [Complete only if the Offeror has represented itself under the provision at 52.219-1 as a small business concern under the size standards of this solicitation.] The Offeror [ ] is, [ ] is not an emerging small business.

(c) (Complete only if the Offeror is a small business or an emerging small business, indicating its size range.)

Offeror's number of employees for the past 12 months (check this column if size standard stated in solicitation is expressed in terms of number of employees) or Offeror's average annual gross revenue for the last 3 fiscal years (check this column if size standard stated in solicitation is expressed in terms of annual receipts). (Check one of the following.)

No. of Employees	Avg. Annual Gross Revenues
____ 50 or fewer	____ $1 million or less
____ 51 - 100	____ $1,000,001 - $2 million
____ 101 - 250	____ $2,000,001 - $3.5 million
____ 251 - 500	____ $3,500,001 - $5 million
____ 501 - 750	____ $5,000,001 - $10 million
____ 751 - 1,000	____ $10,000,001 - $17 million
____ Over 1,000	____ Over $17 million

(End of provision)

52.222-22 PREVIOUS CONTRACTS AND COMPLIANCE REPORTS (FEB 1999)

The offeror represents that --

(a) ( ) It has, ( ) has not participated in a previous contract or subcontract subject to the Equal Opportunity clause of this solicitation;

(b) ( ) It has, ( ) has not, filed all required compliance reports; and

(c) Representations indicating submission of required compliance reports, signed by proposed subcontractors, will be obtained before subcontract awards.

(End of provision)

52.223-4 RECOVERED MATERIAL CERTIFICATION (OCT 1997)

As required by the Resource Conservation and Recovery Act of 1976 (42 U.S.C. 6962(c)(3)(A)(i)), the offeror certifies, by signing this offer, that the percentage of recovered materials to be used in the performance of the contract will be at least the amount required by the applicable contract specifications.

(End of provision)

52.223-13 CERTIFICATION OF TOXIC CHEMICAL RELEASE REPORTING (OCT 2000)

(a) Submission of this certification is a prerequisite for making or entering into this contract imposed by Executive Order 12969, August 8, 1995.

(b) By signing this offer, the offeror certifies that--

(1) As the owner or operator of facilities that will be used in the performance of this contract that are subject to the filing and reporting requirements described in section 313 of the Emergency Planning and Community Right-to-Know Act of 1986 (EPCRA) (42 U.S.C. 11023) and section 6607 of the Pollution Prevention Act of 1990 (PPA) (42 U.S.C. 13106), the offeror will file and continue to file for such facilities for the life of the contract the Toxic Chemical Release Inventory Form (Form R) as described in sections 313(a) and (g) of EPCRA and section 6607 of PPA; or

(2) None of its owned or operated facilities to be used in the performance of this contract is subject to the Form R filing and reporting requirements because each such facility is exempt for at least one of the following reasons: (Check each block that is applicable.)

( ) (i) The facility does not manufacture, process or otherwise use any toxic chemicals listed under section 313(c) of EPCRA, 42 U.S.C. 11023(c);

( ) (ii) The facility does not have 10 or more full-time employees as specified in section 313.(b)(1)(A) of EPCRA 42 U.S.C. 11023(b)(1)(A);

( ) (iii) The facility does not meet the reporting thresholds of toxic chemicals established under section 313(f) of EPCRA, 42 U.S.C. 11023(f) (including the alternate thresholds at 40 CFR 372.27, provided an appropriate certification form has been filed with EPA);

( ) (iv) The facility does not fall within Standard Industrial Classification Code (SIC) major groups 20 through 39 or their corresponding North American Industry Classification System (NAICS) sectors 31 through 33; or

( ) (v) The facility is not located within any State of the United States, the District of Columbia, the Commonwealth of Puerto Rico, Guam, American Samoa, the United States Virgin Islands, the Northern Mariana Islands, or any other territory or possession over which the United States has jurisdiction.

(End of clause)

252.209-7001 DISCLOSURE OF OWNERSHIP OR CONTROL BY THE GOVERNMENT OF A TERRORIST COUNTRY (MAR 1998)

(a) "Definitions."

As used in this provision --

(a) "Government of a terrorist country" includes the state and the government of a terrorist country, as well as any political subdivision, agency, or instrumentality thereof.

(2) "Terrorist country" means a country determined by the Secretary of State, under section 6(j)(1)(A) of the Export Administration Act of 1979 (50 U.S.C. App. 2405(j)(i)(A)), to be a country the government of which has repeatedly provided support for such acts of international terrorism. As of the date of this provision, terrorist countries include: Cuba, Iran, Iraq, Libya, North Korea, Sudan, and Syria.

(3) "Significant interest" means --

(i) Ownership of or beneficial interest in 5 percent or more of the firm's or subsidiary's securities. Beneficial interest includes holding 5 percent or more of any class of the firm's securities in "nominee shares," "street names," or some other method of holding securities that does not disclose the beneficial owner;

(ii) Holding a management position in the firm, such as a director or officer;

(iii) Ability to control or influence the election, appointment, or tenure of directors or officers in the firm;

(iv) Ownership of 10 percent or more of the assets of a firm such as equipment, buildings, real estate, or other tangible assets of the firm; or

(v) Holding 50 percent or more of the indebtness of a firm.

(b) "Prohibition on award."

In accordance with 10 U.S.C. 2327, no contract may be awarded to a firm or a subsidiary of a firm if the government of a terrorist country has a significant interest in the firm or subsidiary or, in the case of a subsidiary, the firm that owns the subsidiary, unless a waiver is granted by the Secretary of Defense.

(c) "Disclosure."

If the government of a terrorist country has a significant interest in the Offeror or a subsidiary of the Offeror, the Offeror shall disclosure such interest in an attachment to its offer. If the Offeror is a subsidiary, it shall also disclose any significant interest the government of a terrorist country has in any firm that owns or controls the subsidiary. The disclosure shall include --

(1) Identification of each government holding a significant interest; and

(2) A description of the significant interest held by each government.

(End of provision)

252.247-7022 REPRESENTATION OF EXTENT OF TRANSPORTATION BY SEA (AUG 1992)

(a) The Offeror shall indicate by checking the appropriate blank in paragraph (b) of this provision whether transportation of supplies by sea is anticipated under the resultant contract. The term supplies is defined in the Transportation of Supplies by Sea clause of this solicitation.

(b) Representation. The Offeror represents that it:

____ (1) Does anticipate that supplies will be transported by sea in the performance of any contract or subcontract resulting from this solicitation.

____ (2) Does not anticipate that supplies will be transported by sea in the performance of any contract or subcontract resulting from this solicitation.

(c) Any contract resulting from this solicitation will include the Transportation of Supplies by Sea clause. If the Offeror represents that it will not use ocean transportation, the resulting contract will also include the Defense FAR Supplement clause at 252.247-7024, Notification of Transportation of Supplies by Sea.

(End of provision)

Section 00700 - Contract Clauses

CLAUSES INCORPORATED BY REFERENCE

52.202-1 Alt I	Definitions (Dec 2001) --Alternate I	MAY 2001
52.203-3	Gratuities	APR 1984
52.203-5	Covenant Against Contingent Fees	APR 1984
52.203-6	Restrictions On Subcontractor Sales To The Government	JUL 1995
52.203-7	Anti-Kickback Procedures	JUL 1995
52.203-8	Cancellation, Rescission, and Recovery of Funds for Illegal or Improper Activity	JAN 1997
52.203-10	Price Or Fee Adjustment For Illegal Or Improper Activity	JAN 1997
52.203-12	Limitation On Payments To Influence Certain Federal Transactions	JUN 1997
52.204-4	Printed or Copied Double-Sided on Recycled Paper	AUG 2000
52.209-6	Protecting the Government's Interest When Subcontracting With Contractors Debarred, Suspended, or Proposed for Debarment	JUL 1995
52.211-15	Defense Priority And Allocation Requirements	SEP 1990
52.215-2	Audit and Records--Negotiation	JUN 1999
52.215-11	Price Reduction for Defective Cost or Pricing Data--Modifications	OCT 1997
52.215-13	Subcontractor Cost or Pricing Data--Modifications	OCT 1997
52.215-18	Reversion or Adjustment of Plans for Postretirement Benefits (PRB) Other than Pensions	OCT 1997
52.215-21	Requirements for Cost or Pricing Data or Information Other Than Cost or Pricing Data--Modifications	OCT 1997
52.219-8	Utilization of Small Business Concerns	OCT 2000
52.219-9 Alt II	Small Business Subcontracting Plan (Jan 2002) Alternate II	OCT 2001
52.219-16	Liquidated Damages-Subcontracting Plan	JAN 1999
52.222-3	Convict Labor	AUG 1996
52.222-4	Contract Work Hours and Safety Standards Act - Overtime Compensation	SEP 2000
52.222-6	Davis Bacon Act	FEB 1995
52.222-7	Withholding of Funds	FEB 1988
52.222-8	Payrolls and Basic Records	FEB 1988
52.222-9	Apprentices and Trainees	FEB 1988
52.222-10	Compliance with Copeland Act Requirements	FEB 1988
52.222-11	Subcontracts (Labor Standards)	FEB 1988
52.222-12	Contract Termination-Debarment	FEB 1988
52.222-13	Compliance with Davis-Bacon and Related Act Regulations.	FEB 1988
52.222-14	Disputes Concerning Labor Standards	FEB 1988
52.222-15	Certification of Eligibility	FEB 1988
52.222-21	Prohibition Of Segregated Facilities	FEB 1999
52.222-26	Equal Opportunity	APR 2002
52.222-27	Affirmative Action Compliance Requirements for Construction	FEB 1999
52.222-35	Equal Opportunity For Special Disabled Veterans, Veterans of the Vietnam Era and Other Eligible Veterans	DEC 2001
52.222-36	Affirmative Action For Workers With Disabilities	JUN 1998
52.222-37	Employment Reports On Special Disabled Veterans, Veterans Of The Vietnam Era, and Other Eligible Veterans	DEC 2001
52.223-5	Pollution Prevention and Right-to-Know Information	APR 1998

52.223-6	Drug Free Workplace	MAY 2001
52.223-14	Toxic Chemical Release Reporting	OCT 2000
52.225-5	Trade Agreements	NOV 2002
52.225-13	Restrictions on Certain Foreign Purchases	JUL 2000
52.227-1	Authorization and Consent	JUL 1995
52.227-2	Notice And Assistance Regarding Patent And Copyright Infringement	AUG 1996
52.227-4	Patent Indemnity-Construction Contracts	APR 1984
52.228-2	Additional Bond Security	OCT 1997
52.228-5	Insurance - Work On A Government Installation	JAN 1997
52.228-11	Pledges Of Assets	FEB 1992
52.228-12	Prospective Subcontractor Requests for Bonds	OCT 1995
52.228-15	Performance and Payment Bonds--Construction	JUL 2000
52.229-2	North Carolina State and Local Sales and Use Tax	APR 1984
52.229-3	Federal, State And Local Taxes	APR 2003
52.232-5	Payments under Fixed-Price Construction Contracts	SEP 2002
52.232-17	Interest	JUN 1996
52.232-18	Availability Of Funds	APR 1984
52.232-23	Assignment Of Claims	JAN 1986
52.232-27	Prompt Payment for Construction Contracts	FEB 2002
52.233-1	Disputes	JUL 2002
52.233-3	Protest After Award	AUG 1996
52.236-2	Differing Site Conditions	APR 1984
52.236-3	Site Investigation and Conditions Affecting the Work	APR 1984
52.236-5	Material and Workmanship	APR 1984
52.236-6	Superintendence by the Contractor	APR 1984
52.236-7	Permits and Responsibilities	NOV 1991
52.236-8	Other Contracts	APR 1984
52.236-9	Protection of Existing Vegetation, Structures, Equipment, Utilities, and Improvements	APR 1984
52.236-10	Operations and Storage Areas	APR 1984
52.236-11	Use and Possession Prior to Completion	APR 1984
52.236-12	Cleaning Up	APR 1984
52.236-13 Alt I	Accident Prevention (Nov 1991) - Alternate I	NOV 1991
52.236-15	Schedules for Construction Contracts	APR 1984
52.236-17	Layout of Work	APR 1984
52.236-21	Specifications and Drawings for Construction	FEB 1997
52.236-26	Preconstruction Conference	FEB 1995
52.242-13	Bankruptcy	JUL 1995
52.242-14	Suspension of Work	APR 1984
52.243-4	Changes	AUG 1987
52.244-5	Competition In Subcontracting	DEC 1996
52.248-3	Value Engineering-Construction	FEB 2000
52.249-2 Alt I	Termination for Convenience of the Government (Fixed-Price) (Sep 1996) - Alternate I	SEP 1996
52.249-10	Default (Fixed-Price Construction)	APR 1984
52.253-1	Computer Generated Forms	JAN 1991
252.201-7000	Contracting Officer's Representative	DEC 1991
252.203-7001	Prohibition On Persons Convicted of Fraud or Other Defense-Contract-Related Felonies	MAR 1999
252.203-7002	Display Of DOD Hotline Poster	DEC 1991
252.204-7000	Disclosure Of Information	DEC 1991
252.204-7003	Control Of Government Personnel Work Product	APR 1992

252.204-7004	Required Central Contractor Registration	NOV 2001
252.205-7000	Provisions Of Information To Cooperative Agreement Holders	DEC 1991
252.209-7000	Acquisition From Subcontractors Subject To On-Site Inspection Under The Intermediate Range Nuclear Forces (INF) Treaty	NOV 1995
252.209-7004	Subcontracting With Firms That Are Owned or Controlled By The Government of a Terrorist Country	MAR 1998
252.215-7000	Pricing Adjustments	DEC 1991
252.219-7003	Small, Small Disadvantaged and Women-Owned Small Business Subcontracting Plan (DOD Contracts)	APR 1996
252.223-7006	Prohibition On Storage And Disposal Of Toxic And Hazardous Materials	APR 1993
252.225-7012	Preference For Certain Domestic Commodities	FEB 2003
252.225-7031	Secondary Arab Boycott Of Israel	APR 2003
252.226-7001	Utilization of Indian Organizations and Indian-Owned Economic Enterprises--DoD Contracts	SEP 2001
252.227-7022	Government Rights (Unlimited)	MAR 1979
252.227-7033	Rights in Shop Drawings	APR 1966
252.231-7000	Supplemental Cost Principles	DEC 1991
252.236-7000	Modification Proposals-Price Breakdown	DEC 1991
252.236-7005	Airfield Safety Precautions	DEC 1991
252.242-7000	Postaward Conference	DEC 1991
252.242-7004	Material Management And Accounting System	DEC 2000
252.243-7001	Pricing Of Contract Modifications	DEC 1991
252.243-7002	Requests for Equitable Adjustment	MAR 1998
252.247-7024	Notification Of Transportation Of Supplies By Sea	MAR 2000

CLAUSES INCORPORATED BY FULL TEXT

52.219-4 NOTICE OF PRICE EVALUATION PREFERENCE FOR HUBZONE SMALL BUSINESS CONCERNS (JAN 1999)

(a) Definition. HUBZone small business concern, as used in this clause, means a small business concern that appears on the List of Qualified HUBZone Small Business Concerns maintained by the Small Business Administration.

(b) Evaluation preference. (1) Offers will be evaluated by adding a factor of 10 percent to the price of all offers, except--

(i) Offers from HUBZone small business concerns that have not waived the evaluation preference;

(ii) Otherwise successful offers from small business concerns;

(iii) Otherwise successful offers of eligible products under the Trade Agreements Act when the dollar threshold for application of the Act is exceeded (see 25.402 of the Federal Acquisition Regulation (FAR)); and

(iv) Otherwise successful offers where application of the factor would be inconsistent with a Memorandum of Understanding or other international agreement with a foreign government.

(2) The factor of 10 percent shall be applied on a line item basis or to any group of items on which award may be made. Other evaluation factors described in the solicitation shall be applied before application of the factor.

(3) A concern that is both a HUBZone small business concern and a small disadvantaged business concern will receive the benefit of both the HUBZone small business price evaluation preference and the small disadvantaged business price evaluation adjustment (see FAR clause 52.219-23). Each applicable price evaluation preference or adjustment shall be calculated independently against an offeror's base offer.

These individual preference amounts shall be added together to arrive at the total evaluated price for that offer.

(c) Waiver of evaluation preference. A HUBZone small business concern may elect to waive the evaluation preference, in which case the factor will be added to its offer for evaluation purposes. The agreements in paragraph (d) of this clause do not apply if the offeror has waived the evaluation preference.

___ Offeror elects to waive the evaluation preference.

(d) Agreement. A HUBZone small business concern agrees that in the performance of the contract, in the case of a contract for

(1) Services (except construction), at least 50 percent of the cost of personnel for contract performance will be spent for employees of the concern or employees of other HUBZone small business concerns;

(2) Supplies (other than procurement from a nonmanufacturer of such supplies), at least 50 percent of the cost of manufacturing, excluding the cost of materials, will be performed by the concern or other HUBZone small business concerns;

(3) General construction, at least 15 percent of the cost of the contract performance incurred for personnel will be will be spent on the concern's employees or the employees of other HUBZone small business concerns; or

(4) Construction by special trade contractors, at least 25 percent of the cost of the contract performance incurred for personnel will be spent on the concern's employees or the employees of other HUBZone small business concerns.

(e) A HUBZone joint venture agrees that in the performance of the contract, the applicable percentage specified in paragraph (d) of this clause will be performed by the HUBZone small business participant or participants.

(f) A HUBZone small business concern nonmanufacturer agrees to furnish in performing this contract only end items manufactured or produced by HUBZone small business manufacturer concerns. This paragraph does not apply in connection with construction or service contracts.

(End of clause)

52.219-9 SMALL BUSINESS SUBCONTRACTING PLAN (JAN 2002)

(a) This clause does not apply to small business concerns.

(b) Definitions. As used in this clause--

Commercial item means a product or service that satisfies the definition of commercial item in section 2.101 of the Federal Acquisition Regulation.

Commercial plan means a subcontracting plan (including goals) that covers the offeror's fiscal year and that applies to the entire production of commercial items sold by either the entire company or a portion thereof (e.g., division, plant, or product line).

Individual contract plan means a subcontracting plan that covers the entire contract period (including option periods), applies to a specific contract, and has goals that are based on the offeror's planned subcontracting in support of the specific contract, except that indirect costs incurred for common or joint purposes may be allocated on a prorated basis to the contract.

Master plan means a subcontracting plan that contains all the required elements of an individual contract plan, except goals, and may be incorporated into individual contract plans, provided the master plan has been approved.

Subcontract means any agreement (other than one involving an employer-employee relationship) entered into by a Federal Government prime Contractor or subcontractor calling for supplies or services required for performance of the contract or subcontract.

(c) The offeror, upon request by the Contracting Officer, shall submit and negotiate a subcontracting plan, where applicable, that separately addresses subcontracting with small business, veteran-owned small business, HUBZone small business concerns, small disadvantaged business, and women-owned small business concerns. If the offeror is submitting an individual contract plan, the plan must separately address subcontracting with small business, veteran-owned small business, HUBZone small business, small disadvantaged business, and women-owned small business concerns, with a separate part for the basic contract and separate parts for each option (if any). The plan shall be included in and made a part of the resultant contract. The subcontracting plan shall be negotiated within the time specified by the Contracting Officer. Failure to submit and negotiate the subcontracting plan shall make the offeror ineligible for award of a contract.

(d) The offeror's subcontracting plan shall include the following:

(1) Goals, expressed in terms of percentages of total planned subcontracting dollars, for the use of small business, veteran-owned small business, HUBZone small business, small disadvantaged business, and women-owned small business concerns as subcontractors. The offeror shall include all subcontracts that contribute to contract performance, and may include a proportionate share of products and services that are normally allocated as indirect costs.

(2) A statement of--

(i) Total dollars planned to be subcontracted for an individual contract plan; or the offeror's total projected sales, expressed in dollars, and the total value of projected subcontracts to support the sales for a commercial plan;

(ii) Total dollars planned to be subcontracted to small business concerns;

(iii) Total dollars planned to be subcontracted to veteran-owned small business concerns;

(iv) Total dollars planned to be subcontracted to HUBZone small business concerns;

(v) Total dollars planned to be subcontracted to small disadvantaged business concerns; and

(vi) Total dollars planned to be subcontracted to women-owned small business concerns.

(3) A description of the principal types of supplies and services to be subcontracted, and an identification of the types planned for subcontracting to--

(i) Small business concerns;

(ii) Veteran-owned small business concerns;

(iii) HUBZone small business concerns;

(iv) Small disadvantaged business concerns; and

(v) Women-owned small business concerns.

(4) A description of the method used to develop the subcontracting goals in paragraph (d)(1) of this clause.

(5) A description of the method used to identify potential sources for solicitation purposes (e.g., existing company source lists, the Procurement Marketing and Access Network (PRO-Net) of the Small Business Administration (SBA), veterans service organizations, the National Minority Purchasing Council Vendor Information Service, the Research and Information Division of the Minority Business Development Agency in the Department of Commerce, or small, HUBZone, small disadvantaged, and women-owned small business trade associations). A firm may rely on the information contained in PRO-Net as an accurate representation of a concern's size and ownership characteristics for the purposes of maintaining a small, veteran-owned small, HUBZone small, small disadvantaged, and women-owned small business source list. Use of PRO-Net as its source list does not relieve a firm of its responsibilities (e.g., outreach, assistance, counseling, or publicizing subcontracting opportunities) in this clause.

(6) A statement as to whether or not the offeror in included indirect costs in establishing subcontracting goals, and a description of the method used to determine the proportionate share of indirect costs to be incurred with—

(i) Small business concerns;

(ii) Veteran-owned small business concerns;

(iii) HUBZone small business concerns;

(iv) Small disadvantaged business concerns; and

(v) Women-owned small business concerns.

(7) The name of the individual employed by the offeror who will administer the offeror's subcontracting program, and a description of the duties of the individual.

(8) A description of the efforts the offeror will make to assure that small business, veteran-owned small business, HUBZone small business, small disadvantaged business and women-owned small business concerns have an equitable opportunity to compete for subcontracts.

(9) Assurances that the offeror will include the clause of this contract entitled ``Utilization of Small Business Concerns'' in all subcontracts that offer further subcontracting opportunities, and that the offeror will require all subcontractors (except small business concerns) that receive subcontracts in excess of $500,000 ($1,000,000 for construction of any public facility) to adopt a subcontracting plan that complies with the requirements of this clause.

(10) Assurances that the offeror will--

(i) Cooperate in any studies or surveys as may be required;

(ii) Submit periodic reports so that the Government can determine the extent of compliance by the offeror with the subcontracting plan;

(iii) Submit Standard Form (SF) 294, Subcontracting Report for Individual Contracts, and/or SF 295, Summary Subcontract Report, in accordance with paragraph (j) of this clause. The reports shall provide information on subcontract awards to small business concerns, veteran-owned small business concerns, service-disabled veteran-owned small business concerns, small disadvantaged business concerns, women-owned small business concerns,

and Historically Black Colleges and Universities and Minority Institutions. Reporting shall be in accordance with the instructions on the forms or as provided in agency regulations.

(iv) Ensure that its subcontractors agree to submit SF 294 and SF 295.

(11) A description of the types of records that will be maintained concerning procedures that have been adopted to comply with the requirements and goals in the plan, including establishing source lists; and a description of the offeror's efforts to locate small business, veteran-owned small business, HUBZone small business, small disadvantaged business, and women-owned small business concerns and award subcontracts to them. The records shall include at least the following (on a plant-wide or company-wide basis, unless otherwise indicated)

(i) Source lists (e.g., PRO-Net), guides, and other data that identify small business, veteran-owner small business, HUBZone small business, small disadvantaged business, and women-owned small business concerns.

(ii) Organizations contacted in an attempt to locate sources that are small business, veteran-owned small business, HUBZone small business, small disadvantaged business, or women-owned small business concerns.

(iii) Records on each subcontract solicitation resulting in an award of more than $100,000, indicating--

(A) Whether small business concerns were solicited and, if not, why not;

(B) Whether veteran-owned small business concerns were solicited and, if not, why not;

(C) Whether HUBZone small business concerns were solicited and, if not, why not;

(D) Whether small disadvantaged business concerns were solicited and, if not, why not;

(E) Whether women-owned small business concerns were solicited and, if not, why not; and

(F) If applicable, the reason award was not made to a small business concern.

(iv) Records of any outreach efforts to contact--

(A) Trade associations;

(B) Business development organizations;

(C) Conferences and trade fairs to locate small, HUBZone small, small disadvantaged, and women-owned small business sources; and

(D) Veterans service organizations.

(v) Records of internal guidance and encouragement provided to buyers through--

(A) Workshops, seminars, training, etc.; and

(B) Monitoring performance to evaluate compliance with the program's requirements.

(vi) On a contract-by-contract basis, records to support award data submitted by the offeror to the Government, including the name, address, and business size of each subcontractor. Contractors having commercial plans need not comply with this requirement.

(e) In order to effectively implement this plan to the extent consistent with efficient contract performance, the Contractor shall perform the following functions:

(1) Assist small business, veteran-owner small business, HUBZone small business, small disadvantaged business, and women-owned small business concerns by arranging solicitations, time for the preparation of bids, quantities, specifications, and delivery schedules so as to facilitate the participation by such concerns. Where the Contractor's lists of potential small business, veteran-owner small business, HUBZone small business, small disadvantaged business, and women-owned small business subcontractors are excessively long, reasonable effort shall be made to give all such small business concerns an opportunity to compete over a period of time.

(2) Provide adequate and timely consideration of the potentialities of small business, veteran-owner small business, HUBZone small business, small disadvantaged business, and women-owned small business concerns in all ``make-or-buy'' decisions.

(3) Counsel and discuss subcontracting opportunities with representatives of small business, veteran-owner small business, HUBZone small business, small disadvantaged business, and women-owned small business firms.

(4) Provide notice to subcontractors concerning penalties and remedies for misrepresentations of business status as small, veteran-owner small business, HUBZone small, small disadvantaged, or women-owned small business for the purpose of obtaining a subcontract that is to be included as part or all of a goal contained in the Contractor's subcontracting plan.

(f) A master plan on a plant or division-wide basis that contains all the elements required by paragraph (d) of this clause, except goals, may be incorporated by reference as a part of the subcontracting plan required of the offeror by this clause; provided--
(1) the master plan has been approved, (2) the offeror ensures that the master plan is updated as necessary and provides copies of the approved master plan, including evidence of its approval, to the Contracting Officer, and (3) goals and any deviations from the master plan deemed necessary by the Contracting Officer to satisfy the requirements of this contract are set forth in the individual subcontracting plan.

(g) A commercial plan is the preferred type of subcontracting plan for contractors furnishing commercial items. The commercial plan shall relate to the offeror's planned subcontracting generally, for both commercial and Government business, rather than solely to the Government contract. Commercial plans are also preferred for subcontractors that provide commercial items under a prime contract, whether or not the prime contractor is supplying a commercial item.

(h) Prior compliance of the offeror with other such subcontracting plans under previous contracts will be considered by the Contracting Officer in determining the responsibility of the offeror for award of the contract.

(i) The failure of the Contractor or subcontractor to comply in good faith with (1) the clause of this contract entitled "Utilization Of Small Business Concerns," or (2) an approved plan required by this clause, shall be a material breach of the contract.

(j) The Contractor shall submit the following reports:

(1) Standard Form 294, Subcontracting Report for Individual Contracts. This report shall be submitted to the Contracting Officer semiannually and at contract completion. The report covers subcontract award data related to this contract. This report is not required for commercial plans.

(2) Standard Form 295, Summary Subcontract Report. This report encompasses all of the contracts with the awarding agency. It must be submitted semi-annually for contracts with the Department of Defense and annually for contracts with civilian agencies. If the reporting activity is covered by a commercial plan, the reporting activity must report annually all subcontract awards under that plan. All reports submitted at the close of each fiscal year (both individual and commercial plans) shall include a breakout, in the Contractor's format, of subcontract awards, in whole dollars, to

small disadvantaged business concerns by North American Industry Classification System (NAICS) Industry Subsector. For a commercial plan, the Contractor may obtain from each of its subcontractors a predominant NAICS Industry Subsector and report all awards to that subcontractor under its predominant NAICS Industry Subsector.

(End of clause)

52.225-11 BUY AMERICAN ACT--CONSTRUCTION MATERIALS UNDER TRADE AGREEMENTS (JUL 2002)

(a) Definitions. As used in this clause--

Component means an article, material, or supply incorporated directly into a construction material.

Construction material means an article, material, or supply brought to the construction site by the Contractor or subcontractor for incorporation into the building or work. The term also includes an item brought to the site preassembled from articles, materials, or supplies. However, emergency life safety systems, such as emergency lighting, fire alarm, and audio evacuation systems, that are discrete systems incorporated into a public building or work and that are produced as complete systems, are evaluated as a single and distinct construction material regardless of when or how the individual parts or components of those systems are delivered to the construction site. Materials purchased directly by the Government are supplies, not construction material.

Cost of components means--

(1) For components purchased by the Contractor, the acquisition cost, including transportation costs to the place of incorporation into the construction material (whether or not such costs are paid to a domestic firm), and any applicable duty (whether or not a duty-free entry certificate is issued); or

(2) For components manufactured by the Contractor, all costs associated with the manufacture of the component, including transportation costs as described in paragraph (1) of this definition, plus allocable overhead costs, but excluding profit. Cost of components does not include any costs associated with the manufacture of the end product.

Designated country means any of the following countries: Aruba, Austria, Bangladesh, Belgium, Benin, Bhutan, Botswana, Burkina Faso, Burundi, Canada, Cape Verde, Central African Republic, Chad, Comoros, Denmark.

Djibouti, Equatorial Guinea, Finland, France, Gambia, Germany, Greece, Guinea, Guinea-Bissau, Haiti, Hong Kong, Ireland, Israel, Italy, Japan.

Kiribati, Korea, Republic of, Lesotho, Liechtenstein, Luxembourg, Malawi, Maldives, Mali, Mozambique, Nepal, Netherlands, Niger, Norway, Portugal, Rwanda.

Sao Tome and Principe, Sierra Leone, Singapore, Somalia, Spain, Sweden, Switzerland, Tanzania U.R., Togo, Tuvalu, Uganda, United Kingdom, Vanuatu, Western Samoa, Yemen.

Designated country construction material means a construction material that--

(1) Is wholly the growth, product, or manufacture of a designated country; or

(2) In the case of a construction material that consists in whole or in part of materials from another country, has been substantially transformed in a designated country into a new and different construction material distinct from the materials from which it was transformed.

Domestic construction material means--

(1) An unmanufactured construction material mined or produced in the United States; or

(2) A construction material manufactured in the United States, if the cost of its components mined, produced, or manufactured in the United States exceeds 50 percent of the cost of all its components. Components of foreign origin of the same class or kind for which nonavailability determinations have been made are treated as domestic.

Foreign construction material means a construction material other than a domestic construction material.

North American Free Trade Agreement country means Canada or Mexico.

North American Free Trade Agreement country construction material means a construction material that--

(1) Is wholly the growth, product, or manufacture of a North American Free Trade Agreement (NAFTA) country; or

(2) In the case of a construction material that consists in whole or in part of materials from another country, has been substantially transformed in a NAFTA country into a new and different construction material distinct from the materials from which it was transformed.

United States means the 50 States and the District of Columbia, U.S. territories and possessions, Puerto Rico, the Northern Mariana Islands, and any other place subject to U.S. jurisdiction, but does not include leased bases.

(b) Construction materials. (1) This clause implements the Buy American Act (41 U.S.C. 10a-10d) and the Balance of Payments Program by providing a preference for domestic construction material. In addition, the Contracting Officer has determined that the Trade Agreements Act and the North American Free Trade Agreement (NAFTA) apply to this acquisition. Therefore, the Buy American Act restrictions are waived for designated country and NAFTA country construction materials.

(2) The Contractor shall use only domestic, designated country, or NAFTA country construction material in performing this contract, except as provided in paragraphs (b)(3) and (b)(4) of this clause.

(3) The requirement in paragraph (b)(2) of this clause does not apply to the construction materials or components listed by the Government as follows: none

(4) The Contracting Officer may add other foreign construction material to the list in paragraph (b)(3) of this clause if the Government determines that--

(i) The cost of domestic construction material would be unreasonable. The cost of a particular domestic construction material subject to the restrictions of the Buy American Act is unreasonable when the cost of such material exceeds the cost of foreign material by more than 6 percent;

(ii) The application of the restriction of the Buy American Act to a particular construction material would be impracticable or inconsistent with the public interest; or

(iii) The construction material is not mined, produced, or manufactured in the United States in sufficient and reasonably available commercial quantities of a satisfactory quality.

(c) Request for determination of inapplicability of the Buy American Act.

(1)(i) Any Contractor request to use foreign construction material in accordance with paragraph (b)(4) of this clause shall include adequate information for Government evaluation of the request, including--

(A) A description of the foreign and domestic construction materials;

(B) Unit of measure;

(C) Quantity;

(D) Price;

(E) Time of delivery or availability;

(F) Location of the construction project;

(G) Name and address of the proposed supplier; and

(H) A detailed justification of the reason for use of foreign construction materials cited in accordance with paragraph (b)(3) of this clause.

(ii) A request based on unreasonable cost shall include a reasonable survey of the market and a completed price comparison table in the format in paragraph (d) of this clause.

(iii) The price of construction material shall include all delivery costs to the construction site and any applicable duty (whether or not a duty-free certificate may be issued).

(iv) Any Contractor request for a determination submitted after contract award shall explain why the Contractor could not reasonably foresee the need for such determination and could not have requested the determination before contract award. If the Contractor does not submit a satisfactory explanation, the Contracting Officer need not make a determination.

(2) If the Government determines after contract award that an exception to the Buy American Act applies and the Contracting Officer and the Contractor negotiate adequate consideration, the Contracting Officer will modify the contract to allow use of the foreign construction material. However, when the basis for the exception is the unreasonable price of a domestic construction material, adequate consideration is not less than the differential established in paragraph (b)(4)(i) of this clause.

(3) Unless the Government determines that an exception to the Buy American Act applies, use of foreign construction material is noncompliant with the Buy American Act.

(d) Data. To permit evaluation of requests under paragraph (c) of this clause based on unreasonable cost, the Contractor shall include the following information and any applicable supporting data based on the survey of suppliers:

Foreign and Domestic Construction Materials Price Comparison

Construction material description	Unit of measure	Quantity	Price (dollars) \1\
Item 1:			
Foreign construction material....	.....	.....	.....
Domestic construction material...	.....	.....	.....
Item 2:			
Foreign construction material....	.....	.....	.....
Domestic construction material...	.....	.....	.....

\1\ Include all delivery costs to the construction site and any applicable duty (whether or not a duty-free entry certificate is issued).

List name, address, telephone number, and contact for suppliers surveyed. Attach copy of response; if oral, attach summary.
Include other applicable supporting information.

(End of clause)

52.228-1 BID GUARANTEE (SEP 1996)

(a) Failure to furnish a bid guarantee in the proper form and amount, by the time set for opening of bids, may be cause for rejection of the bid.

(b) The bidder shall furnish a bid guarantee in the form of a firm commitment, e.g., bid bond supported by good and sufficient surety or sureties acceptable to the Government, postal money order, certified check, cashier's check, irrevocable letter of credit, or, under Treasury Department regulations, certain bonds or notes of the United States. The Contracting Officer will return bid guarantees, other than bid bonds, (1) to unsuccessful bidders as soon as practicable after the opening of bids, and (2) to the successful bidder upon execution of contractual documents and bonds (including any necessary coinsurance or reinsurance agreements), as required by the bid as accepted.-

(c) The amount of the bid guarantee shall be 20% (twenty percent) of the bid price or $3,000,000.00 (3 million), whichever is less.-

(d) If the successful bidder, upon acceptance of its bid by the Government within the period specified for acceptance, fails to execute all contractual documents or furnish executed bond(s) within 10 days after receipt of the forms by the bidder, the Contracting Officer may terminate the contract for default.-

(e) In the event the contract is terminated for default, the bidder is liable for any cost of acquiring the work that exceeds the amount of its bid, and the bid guarantee is available to offset the difference.

(End of clause)

52.228-14 IRREVOCABLE LETTER OF CREDIT (DEC 1999)

(a) “Irrevocable letter of credit” (ILC), as used in this clause, means a written commitment by a federally insured financial institution to pay all or part of a stated amount of money, until the expiration date of the letter, upon presentation by the Government (the beneficiary) of a written demand therefor. Neither the financial institution nor the offeror/Contractor can revoke or condition the letter of credit.

(b) If the offeror intends to use an ILC in lieu of a bid bond, or to secure other types of bonds such as performance and payment bonds, the letter of credit and letter of confirmation formats in paragraphs (e) and (f) of this clause shall be used.

(c) The letter of credit shall be irrevocable, shall require presentation of no document other than a written demand and the ILC (including confirming letter, if any), shall be issued/confirmed by an acceptable federally insured financial institution as provided in paragraph (d) of this clause, and--

(1) If used as a bid guarantee, the ILC shall expire no earlier than 60 days after the close of the bid acceptance period;

(2) If used as an alternative to corporate or individual sureties as security for a performance or payment bond, the offeror/Contractor may submit an ILC with an initial expiration date estimated to cover the entire period for which

financial security is required or may submit an ILC with an initial expiration date that is a minimum period of one year from the date of issuance. The ILC shall provide that, unless the issuer provides the beneficiary written notice of non-renewal at least 60 days in advance of the current expiration date, the ILC is automatically extended without amendment for one year from the expiration date, or any future expiration date, until the period of required coverage is completed and the Contracting Officer provides the financial institution with a written statement waiving the right to payment. The period of required coverage shall be:

(i) For contracts subject to the Miller Act, the later of--

(A) One year following the expected date of final payment;

(B) For performance bonds only, until completion of any warranty period; or

(C) For payment bonds only, until resolution of all claims filed against the payment bond during the one-year period following final payment.

(ii) For contracts not subject to the Miller Act, the later of--

(A) 90 days following final payment; or

(B) For performance bonds only, until completion of any warranty period.

(d) Only federally insured financial institutions rated investment grade or higher shall issue or confirm the ILC. The offeror/Contractor shall provide the Contracting Officer a credit rating that indicates the financial institution has the required rating(s) as of the date of issuance of the ILC. Unless the financial institution issuing the ILC had letter of credit business of less than $25 million in the past year, ILCs over $5 million must be confirmed by another acceptable financial institution that had letter of credit business of less than $25 million in the past year.

(e) The following format shall be used by the issuing financial institution to create an ILC:

_____

[Issuing Financial Institution's Letterhead or Name and Address]

Issue Date _____

IRREVOCABLE LETTER OF CREDIT NO. _____

Account party's name _____

Account party's address _____

For Solicitation No. _____(for reference only)

TO: [U.S. Government agency]

[U.S. Government agency's address]

1. We hereby establish this irrevocable and transferable Letter of Credit in your favor for one or more drawings up to United States $_____. This Letter of Credit is payable at [issuing financial institution's and, if any, confirming financial institution's] office at [issuing financial institution's address and, if any, confirming financial institution's address] and expires with our close of business on _____, or any automatically extended expiration date.

2. We hereby undertake to honor your or the transferee's sight draft(s) drawn on the issuing or, if any, the confirming financial institution, for all or any part of this credit if presented with this Letter of Credit and confirmation, if any, at the office specified in paragraph 1 of this Letter of Credit on or before the expiration date or any automatically extended expiration date.

3. [This paragraph is omitted if used as a bid guarantee, and subsequent paragraphs are renumbered.] It is a condition of this Letter of Credit that it is deemed to be automatically extended without amendment for one year from the expiration date hereof, or any future expiration date, unless at least 60 days prior to any expiration date, we notify you or the transferee by registered mail, or other receipted means of delivery, that we elect not to consider this Letter of Credit renewed for any such additional period. At the time we notify you, we also agree to notify the account party (and confirming financial institution, if any) by the same means of delivery.

4. This Letter of Credit is transferable. Transfers and assignments of proceeds are to be effected without charge to either the beneficiary or the transferee/assignee of proceeds. Such transfer or assignment shall be only at the written direction of the Government (the beneficiary) in a form satisfactory to the issuing financial institution and the confirming financial institution, if any.

5. This Letter of Credit is subject to the Uniform Customs and Practice (UCP) for Documentary Credits, 1993 Revision, International Chamber of Commerce Publication No. 500, and to the extent not inconsistent therewith, to the laws of _____ [state of confirming financial institution, if any, otherwise state of issuing financial institution].

6. If this credit expires during an interruption of business of this financial institution as described in Article 17 of the UCP, the financial institution specifically agrees to effect payment if this credit is drawn against within 30 days after the resumption of our business.

Sincerely,

_____

[Issuing financial institution]

(f) The following format shall be used by the financial institution to confirm an ILC:

_____
[Confirming Financial Institution's Letterhead or Name and Address]

(Date) _____

Our Letter of Credit Advice Number _____

Beneficiary: _____ [U.S. Government agency]

Issuing Financial Institution: _____

Issuing Financial Institution's LC No.: _____

Gentlemen:

1. We hereby confirm the above indicated Letter of Credit, the original of which is attached, issued by _____ [name of issuing financial institution] for drawings of up to United States dollars _____/U.S. $_____ and expiring with our close of business on _____ [the expiration date], or any automatically extended expiration date.

2. Draft(s) drawn under the Letter of Credit and this Confirmation are payable at our office located at _____.

3. We hereby undertake to honor sight draft(s) drawn under and presented with the Letter of Credit and this Confirmation at our offices as specified herein.

4. [This paragraph is omitted if used as a bid guarantee, and subsequent paragraphs are renumbered.] It is a condition of this confirmation that it be deemed automatically extended without amendment for one year from the expiration date hereof, or any automatically extended expiration date, unless:

(a) At least 60 days prior to any such expiration date, we shall notify the Contracting Officer, or the transferee and the issuing financial institution, by registered mail or other receipted means of delivery, that we elect not to consider this confirmation extended for any such additional period; or

(b) The issuing financial institution shall have exercised its right to notify you or the transferee, the account party, and ourselves, of its election not to extend the expiration date of the Letter of Credit.

5. This confirmation is subject to the Uniform Customs and Practice (UCP) for Documentary Credits, 1993 Revision, International Chamber of Commerce Publication No. 500, and to the extent not inconsistent therewith, to the laws of _____ [state of confirming financial institution].

6. If this confirmation expires during an interruption of business of this financial institution as described in Article 17 of the UCP, we specifically agree to effect payment if this credit is drawn against within 30 days after the resumption of our business.

Sincerely,

_____

[Confirming financial institution]

(g) The following format shall be used by the Contracting Officer for a sight draft to draw on the Letter of Credit:

SIGHT DRAFT

_____

[City, State]

(Date) _____

[Name and address of financial institution]

Pay to the order of _____ [Beneficiary Agency] _____ the sum of United States $_____. This draft is drawn under Irrevocable Letter of Credit No. _____.

_____

[Beneficiary Agency]

By: _____

(End of clause)

52.232-33 PAYMENT BY ELECTRONIC FUNDS TRANSFER—CENTRAL CONTRACTOR REGISTRATION (MAY 1999)

(a) Method of payment. (1) All payments by the Government under this contract shall be made by electronic funds transfer (EFT), except as provided in paragraph (a)(2) of this clause. As used in this clause, the term “EFT” refers to the funds transfer and may also include the payment information transfer.

(2) In the event the Government is unable to release one or more payments by EFT, the Contractor agrees to either--

(i) Accept payment by check or some other mutually agreeable method of payment; or

(ii) Request the Government to extend the payment due date until such time as the Government can make payment by EFT (but see paragraph (d) of this clause).

(b) Contractor's EFT information. The Government shall make payment to the Contractor using the EFT information contained in the Central Contractor Registration (CCR) database. In the event that the EFT information changes, the Contractor shall be responsible for providing the updated information to the CCR database.

(c) Mechanisms for EFT payment. The Government may make payment by EFT through either the Automated Clearing House (ACH) network, subject to the rules of the National Automated Clearing House Association, or the Fedwire Transfer System. The rules governing Federal payments through the ACH are contained in 31 CFR part 210.

(d) Suspension of payment. If the Contractor's EFT information in the CCR database is incorrect, then the Government need not make payment to the Contractor under this contract until correct EFT information is entered into the CCR database; and any invoice or contract financing request shall be deemed not to be a proper invoice for the purpose of prompt payment under this contract. The prompt payment terms of the contract regarding notice of an improper invoice and delays in accrual of interest penalties apply.

(e) Contractor EFT arrangements. If the Contractor has identified multiple payment receiving points (i.e., more than one remittance address and/or EFT information set) in the CCR database, and the Contractor has not notified the Government of the payment receiving point applicable to this contract, the Government shall make payment to the first payment receiving point (EFT information set or remittance address as applicable) listed in the CCR database.

(f) Liability for uncompleted or erroneous transfers. (1) If an uncompleted or erroneous transfer occurs because the Government used the Contractor's EFT information incorrectly, the Government remains responsible for--

(i) Making a correct payment;

(ii) Paying any prompt payment penalty due; and

(iii) Recovering any erroneously directed funds.

(2) If an uncompleted or erroneous transfer occurs because the Contractor's EFT information was incorrect, or was revised within 30 days of Government release of the EFT payment transaction instruction to the Federal Reserve System, and--

(i) If the funds are no longer under the control of the payment office, the Government is deemed to have made payment and the Contractor is responsible for recovery of any erroneously directed funds; or

(ii) If the funds remain under the control of the payment office, the Government shall not make payment, and the provisions of paragraph (d) of this clause shall apply.

(g) EFT and prompt payment. A payment shall be deemed to have been made in a timely manner in accordance with the prompt payment terms of this contract if, in the EFT payment transaction instruction released to the Federal Reserve System, the date specified for settlement of the payment is on or before the prompt payment due date, provided the specified payment date is a valid date under the rules of the Federal Reserve System.

(h) EFT and assignment of claims. If the Contractor assigns the proceeds of this contract as provided for in the assignment of claims terms of this contract, the Contractor shall require as a condition of any such assignment, that the assignee shall register in the CCR database and shall be paid by EFT in accordance with the terms of this clause. In all respects, the requirements of this clause shall apply to the assignee as if it were the Contractor. EFT information that shows the ultimate recipient of the transfer to be other than the Contractor, in the absence of a proper assignment of claims acceptable to the Government, is incorrect EFT information within the meaning of paragraph (d) of this clause.

(i) Liability for change of EFT information by financial agent. The Government is not liable for errors resulting from changes to EFT information made by the Contractor's financial agent.

(j) Payment information. The payment or disbursing office shall forward to the Contractor available payment information that is suitable for transmission as of the date of release of the EFT instruction to the Federal Reserve System. The Government may request the Contractor to designate a desired format and method(s) for delivery of payment information from a list of formats and methods the payment office is capable of executing. However, the Government does not guarantee that any particular format or method of delivery is available at any particular payment office and retains the latitude to use the format and delivery method most convenient to the Government. If the Government makes payment by check in accordance with paragraph (a) of this clause, the Government shall mail the payment information to the remittance address contained in the CCR database.

(End of Clause)

52.239-4001 Year 2000 Compliance

The contractor shall ensure products provided under this contract, to include hardware, software, firmware, and middleware, whether acting alone or combined as a system, are Year 2000 compliant as defined as follows: Year 2000 compliant means with respect to information technology, that the information technology accurately processes date/time data (including, but not limited to, calculating, comparing, and sequencing) from, into, and between the twentieth and twenty-first centuries, and the years 1999 and 2000 and leap year calculations, to the extent that other information, used in combination with the information technology being acquired, properly exchanges date/time data with it.

52.239-4005 Year 2000 Compliance - Construction Contracts

a. In accordance with FAR 39.106, the contractor shall ensure that with respect to any design, construction, goods, or services under this contract as well as any subsequent task/delivery orders issued under this contract (if applicable), all information technology contained therein shall be Year 2000 compliant. Specifically:

The contractor shall:

(1) Perform, maintain, and provide an inventory of all major components to include structures, equipment, items, parts, and furnishings under this contract and each task/delivery order which may be affected by the Y2K compliance requirement.

(2) Indicate whether each component is currently Year 2000 compliant or requires an upgrade for compliance prior to government acceptance.

(End of Clause)

52.239-4006 Security Contract Language for all Corps of Engineers' Unclassified Contracts (PIL 2003-06, 19 Feb 03)

All Contractor employees (U.S. citizens and Non- U.S. citizens) working under this contract (to include grants, cooperative agreements and task orders) who require access to Automated Information Systems (AIS), (stand alone computers, network computers/systems, e-mail) shall, at a minimum, be designated into an ADP-III position (non-sensitive) in accordance with DoD 5220-22-R, Industrial Security Regulation. The investigative requirements for an ADP-III position are a favorable National Agency Check (NAC), SF-85P, Public Trust Position. The contractor shall have each applicable employee complete a SF-85P and submit to the USACE, Savannah District Security Officer, ATTN: CESAS-SL, 100 West Oglethorpe Avenue, Savannah, GA 31401 within three (3) working days after award of any contract or task order, and shall be submitted prior to the individual being permitted access to an AIS. Contractors who have a commercial or government entity (CAGE) Code and Facility Security Clearance through the Defense Security Service shall process the NACs and forward visit requests/results of NAC to the Savannah District Security Officer (address above). For those contractors who do not have a CAGE Code or Facility Security Clearance, the Savannah District Security Office will process the investigation in coordination with the Contractor and contract employees.

In accordance with Engineering Regulation, ER 380-1-18, Section 4, foreign nationals who work on Corps of Engineers' contracts or task orders shall be approved by the HQUSACE Foreign Disclosure Officer or higher before beginning work on the contract/task order. This regulation includes subcontractor employees. (NOTE: exceptions to the above requirement include foreign nationals who perform janitorial and/or ground maintenance services.) The contractor shall submit to the Division/District Contract Office, the names of all foreign nationals proposed for performance under this contract/task order, along with documentation to verify that he/she was legally admitted into the United States and has authority to work and/or go to school in the US. Such documentation may include a US passport, Certificate of US citizenship (INS Form N-560 or N-561), Certificate of Naturalization (INS Form N-550 or N-570), foreign passport with I-551 stamp or attached INS Form I-94 indicating employment authorization, Alien Registration Receipt Card with photograph (INS

Form I-151 or I-551), Temporary Resident Card (INS Form I-688), Employment Authorization Card (INS Form I-688A), Reentry Permit (INS Form I-327), Refugee Travel Document (INS Form I-571), Employment Authorization Document issued by the INS which contains a photograph (INS Form I-688B).

Classified contracts require the issuance of a DD Form 254 (Department of Defense Contract Security Classification Specification).

52.252-2 CLAUSES INCORPORATED BY REFERENCE (FEB 1998)

This contract incorporates one or more clauses by reference, with the same force and effect as if they were given in full text. Upon request, the Contracting Officer will make their full text available. Also, the full text of a clause may be accessed electronically at this/these address(es):

FAR web site - http://www.arnet.gov/far/
DFAR web site - http://www.acq.osd.mil/dp/dars/dfars.html
EFAR web site - http://www.hq.usace.army.mil/cepr/asp/main/parc.asp
Combined web site – http://web2.deskbook.osd.mil/

(End of clause)

252.247-7023 TRANSPORTATION OF SUPPLIES BY SEA (MAY 2002) ALTERNATE III (MAY 2002)

(a) Definitions. As used in this clause --

(1) "Components" means articles, materials, and supplies incorporated directly into end products at any level of manufacture, fabrication, or assembly by the Contractor or any subcontractor.

(2) "Department of Defense" (DoD) means the Army, Navy, Air Force, Marine Corps, and defense agencies.

(3) "Foreign flag vessel" means any vessel that is not a U.S.-flag vessel.

(4) "Ocean transportation" means any transportation aboard a ship, vessel, boat, barge, or ferry through international waters.

(5) "Subcontractor" means a supplier, materialman, distributor, or vendor at any level below the prime contractor whose contractual obligation to perform results from, or is conditioned upon, award of the prime contract and who is performing any part of the work or other requirement of the prime contract.

(6) "Supplies" means all property, except land and interests in land, that is clearly identifiable for eventual use by or owned by the DoD at the time of transportation by sea.

(i) An item is clearly identifiable for eventual use by the DoD if, for example, the contract documentation contains a reference to a DoD contract number or a military destination.

(ii) "Supplies" includes (but is not limited to) public works; buildings and facilities; ships; floating equipment and vessels of every character, type, and description, with parts, subassemblies, accessories, and equipment; machine

tools; material; equipment; stores of all kinds; end items; construction materials; and components of the foregoing.

(7) "U.S.-flag vessel" means a vessel of the United States or belonging to the United States, including any vessel registered or having national status under the laws of the United States.

(b)(1) The Contractor shall use U.S.-flag vessels when transporting any supplies by sea under this contract.

(2) A subcontractor transporting supplies by sea under this contract shall use U.S.-flag vessels if--

(i) This contract is a construction contract; or

(ii) The supplies being transported are--

(A) Noncommercial items; or

(B) Commercial items that--

(1) The Contractor is reselling or distributing to the Government without adding value (generally, the Contractor does not add value to items that it contracts for f.o.b. destination shipment);

(2) Are shipped in direct support of U.S. military contingency operations, exercises, or forces deployed in humanitarian or peacekeeping operations; or

(3) Are commissary or exchange cargoes transported outside of the Defense Transportation System in accordance with 10 U.S.C. 2643.

(c) The Contractor and its subcontractors may request that the Contracting Officer authorize shipment in foreign-flag vessels, or designate available U.S.-flag vessels, if the Contractor or a subcontractor believes that --

(1) U.S.-flag vessels are not available for timely shipment;

(2) The freight charges are inordinately excessive or unreasonable; or

(3) Freight charges are higher than charges to private persons for transportation of like goods.

(d) The Contractor must submit any request for use of other than U.S.-flag vessels in writing to the Contracting Officer at least 45 days prior to the sailing date necessary to meet its delivery schedules. The Contracting Officer will process requests submitted after such date(s) as expeditiously as possible, but the Contracting Officer's failure to grant approvals to meet the shipper's sailing date will not of itself constitute a compensable delay under this or any other clause of this contract. Requests shall contain at a minimum --

(1) Type, weight, and cube of cargo;

(2) Required shipping date;

(3) Special handling and discharge requirements;

(4) Loading and discharge points;

(5) Name of shipper and consignee;

(6) Prime contract number; and

(7) A documented description of efforts made to secure U.S.-flag vessels, including points of contact (with names and telephone numbers) with at least two U.S.-flag carriers contacted. Copies of telephone notes, telegraphic and facsimile message or letters will be sufficient for this purpose.

(e) The Contractor shall, within 30 days after each shipment covered by this clause, provide the Contracting Officer and the Maritime Administration, Office of Cargo Preference, U.S. Department of Transportation, 400 Seventh Street SW., Washington, DC 20590, one copy of the rated on board vessel operating carrier's ocean bill of lading, which shall contain the following information:

(1) Prime contract number;

(2) Name of vessel;

(3) Vessel flag of registry;

(4) Date of loading;

(5) Port of loading;

(6) Port of final discharge;

(7) Description of commodity;

(8) Gross weight in pounds and cubic feet if available;

(9) Total ocean freight in U.S. dollars; and

(10) Name of the steamship company.

(f) The Contractor shall insert the substance of this clause, including this paragraph (f), in subcontracts that are for a type of supplies described in paragraph (b)(2) of this clause.

(End of clause)

Section 00800 - Special Contract Requirements

CLAUSES INCORPORATED BY FULL TEXT

52.211-10 COMMENCEMENT, PROSECUTION, AND COMPLETION OF WORK (APR 1984)

The Contractor shall be required to (a) commence work under this contract within 5 calendar days after the date the Contractor receives the notice to proceed, (b) prosecute the work diligently, and (c) complete the entire work ready for use not later than shown in the below table. The time period for each Option, upon award of each Option, shall be added to the completion time for the overall contract. The time stated for completion shall include final cleanup of the premises.

Supplies/Services	Work Phases	Calendar Days
Base Bid	1, 2, 3, 4, 5, 6	365
Option 1	2.5	65
Option 2	3, 4, 5, 6	145
Option 3	7, 8	135
Option 4	9, 10	95

(End of clause)

52.211-12 LIQUIDATED DAMAGES--CONSTRUCTION (SEP 2000)

(a) If the Contractor fails to complete the work within the time specified in the contract, the Contractor shall pay liquidated damages to the Government in the amount of $1,274.32 for each calendar day of delay until the work is completed or accepted.

(b) If the Government terminates the Contractor's right to proceed, liquidated damages will continue to accrue until the work is completed. These liquidated damages are in addition to excess costs of repurchase under the Termination clause.

(End of clause)

52.217-7 OPTION FOR INCREASED QUANTITY--SEPARATELY PRICED LINE ITEM (MAR 1989)

The Government may require the delivery of the numbered line item, identified in the Schedule as an option item, in the quantity and at the price stated in the Schedule. The Contracting Officer may exercise the option by written notice to the Contractor any time prior to October 1, 2004. Delivery of added items shall continue at the same rate that like items are called for under the contract, unless the parties otherwise agree.

(End of clause)

52.219-4002 REPORTING REQUIREMENTS--SUBCONTRACTING PLAN (CESAD-CT JUL 1993)

(a) Retainage will be withheld from progress payments in an amount sufficient to protect the Government's ability to assess Liquidated Damages in accordance with FAR clause 52.219-0016 for failure to submit timely SF 294 and SF 295 Reports. The amount of retainage will be determined in accordance with the following formula:

(b) Total dollar amount proposed for subcontracting to small business multiplied by percentage of actual progress on the contract, up to a maximum of 10% of the given progress payment, shall be withheld from the next progress payment due after a contractor fails to submit a required report. If one or more reports have been submitted before such failure, formula for determining the amount of retainage will be adjusted by deducting any amounts reported as subcontracted to small business from the total dollar amount proposed to be subcontracted and the difference multiplied by the percent of actual progress, up to a maximum of 10% of the given progress payment.

(End of clause)

52.223-9 ESTIMATE OF PERCENTAGE OF RECOVERED MATERIAL CONTENT FOR EPA-DESIGNATED PRODUCTS (AUG 2000)

(a) Definitions. As used in this clause--

Postconsumer material means a material or finished product that has served its intended use and has been discarded for disposal or recovery, having completed its life as a consumer item. Postconsumer material is a part of the broader category of “recovered material.”

Recovered material means waste materials and by-products recovered or diverted from solid waste, but the term does not include those materials and by-products generated from, and commonly reused within, an original manufacturing process.

(b) The Contractor, on completion of this contract, shall--

(1) Estimate the percentage of the total recovered material used in contract performance, including, if applicable, the percentage of postconsumer material content; and

(2) Submit this estimate to Savannah District Office.

(End of clause)

52.223-4002 U.S. ARMY CORPS OF ENGINEERS SAFETY AND HEALTH REQUIREMENTS MANUAL, EM 385-1-1

This paragraph applies to contracts and purchase orders that require the contractor to comply with EM 385-1-1 (e.g., contracts that include the Accident Prevention clause at FAR 52.236-13 and/or other safety provisions). EM 385-1-1 and its changes are available at http://www.hq.usace.army.mil. (At the HQ homepage, select Safety and Occupational Health.) The Contractor shall be responsible for complying with the current edition and all changes posted on the web through the date that is 10 calendar days prior to the date offers are due. If the solicitation is amended to extend the time set for receipt of offers, the 10 calendar days rule stated above shall be applied against the amended date. (For example, if offers are due on 10 April, all changes posted on or before 31 March shall apply to the contract. If the time for receipt of offers is extended from 10 April to 20 April, all changes posted on or before 10 April shall apply to the contract.)

52.228-4002 REQUIRED INSURANCE (FEB 1987 SAS) (Ref. FAR 28.307)

(a) The Contractor shall procure and maintain during the entire period of his performance under this contract the following minimum insurance:

Comprehensive and Employer's Liability Insurance in the amount required by the State law in which the work is to be performed under this contract.

Comprehensive General Liability Insurance in an amount not less than $500,000 per accident.

Automobile Liability Insurance: $200,000 per person and $500,000 per accident for bodily injury liability and $20,000 property damage liability.

(b) Prior to the commencement of work hereunder, the Contractor shall furnish to the Contracting Officer a certificate or written statement of the above-required insurance. The policies evidencing required insurance shall contain an endorsement to the effect that cancellation, or any material change in the policies adversely affecting the interests of the Government in such insurance, shall not be effective for such period as may be prescribed by the laws of the State in which this contract is to be performed and in no event less than 30 days after written notice thereof to the Contracting Officer.

(c) The Contractor agrees to insert the substance of this clause, including this subparagraph (c), in all subcontracts hereunder.

(End of clause)

52.231-5000 EQUIPMENT OWNERSHIP AND OPERATING EXPENSE SCHEDULE
MAR 1995)--EFARS

(a) This clause does not apply to terminations. See 52.249-5000, Basis for Settlement of Proposals and FAR Part 49.

(b) Allowable cost for construction and marine plant and equipment in sound workable condition owned or controlled and furnished by a contractor or subcontractor at any tier shall be based on actual cost data for each piece of equipment or groups of similar serial and series for which the Government can determine both ownership and operating costs from the contractor's accounting records. When both ownership and operating costs cannot be determined for any piece of equipment or groups of similar serial or series equipment from the contractor's accounting records, costs for that equipment shall be based upon the applicable provisions of EP 1110-1-8, Construction Equipment Ownership and Operating Expense Schedule, Region III. Working conditions shall be considered to be average for determining equipment rates using the schedule unless specified otherwise by the contracting officer. For equipment not included in the schedule, rates for comparable pieces of equipment may be used or a rate may be developed using the formula provided in the schedule. For forward pricing, the schedule in effect at the time of negotiations shall apply. For retroactive pricing, the schedule in effect at the time the work was performed shall apply.

(c) Equipment rental costs are allowable, subject to the provisions of FAR 31.105(d)(ii) and FAR 31.205-36. Rates for equipment rented from an organization under common control, lease-purchase arrangements, and sale-leaseback arrangements, will be determined using the schedule, except that actual rates will be used for equipment leased from an organization under common control that has an established practice of leasing the same or similar equipment to unaffiliated lessees.

(d) When actual equipment costs are proposed and the total amount of the pricing action exceeds the small purchase threshold, the contracting officer shall request the contractor to submit either certified cost or pricing data, or partial/limited data, as appropriate. The data shall be submitted on Standard Form 1411, Contract Pricing Proposal Cover Sheet.

(End of clause)

52.232-4007 ACCOUNTING AND APPROPRIATION DATA (APR 1989 CESAS-RM)

21 3 2050 308-8021 P7000 3230 S09133

(End of clause)

52.232-4008 DESIGNATED BILLING OFFICE (APR 1989 CESAS-RM)

Invoices will be mailed to:

Resident Engineer
Pope Resident Office (CD-PSJ)
527 Interceptor Rd.
Pope AFB, NC 28308

(End of Clause)

52.232-4009 DESIGNATED PAYMENT OFFICE (AUG 1998 CESAS-RM-F)

Payment will be made by:
U.S. Army Corps of Engineers Finance Center
ATTN: CEFC-AO-P
5720 Integrity Drive
Millington, TN 38054-5005
(End of clause)

52.236-1 PERFORMANCE OF WORK BY THE CONTRACTOR (APR 1984)

The Contractor shall perform on the site, and with its own organization, work equivalent to at least 20% (twenty percent) of the total amount of work to be performed under the contract. This percentage may be reduced by a supplemental agreement to this contract if, during performing the work, the Contractor requests a reduction and the Contracting Officer determines that the reduction would be to the advantage of the Government.

(End of clause)

52.236-4 PHYSICAL DATA (APR 1984)

Data and information furnished or referred to below is for the Contractor's information. The Government shall not be responsible for any interpretation of or conclusion drawn from the data or information by the Contractor.

(a) The indications of physical conditions on the drawings and in the specifications are the result of site investigations by . . . . . [insert a description of investigational methods used, such as surveys, auger borings, core borings, test pits, probings, test tunnels].

(b) Weather conditions . . . . . (insert a summary of weather records and warnings).

(c) Transportation facilities . . . . . (insert a summary of transportation facilities providing access from the site,

including information about their availability and limitations.

(d) . . . . . (insert other pertinent information).

(End of clause)

52.236-14 AVAILABILITY AND USE OF UTILITY SERVICES (APR 1984)

(a) The Government shall make all reasonably required amounts of utilities available to the Contractor from existing outlets and supplies, as specified in the contract. Unless otherwise provided in the contract, the amount of each utility service consumed shall be charged to or paid for by the Contractor at prevailing rates charged to the Government or, where the utility is produced by the Government, at reasonable rates determined by the Contracting Officer. The Contractor shall carefully conserve any utilities furnished without charge.

(b) The Contractor, at its expense and in a workmanlike manner satisfactory to the Contracting Officer, shall install and maintain all necessary temporary connections and distribution lines, and all meters required to measure the amount of each utility used for the purpose of determining charges. Before final acceptance of the work by the Government, the Contractor shall remove all the temporary connections, distribution lines, meters, and associated paraphernalia.

(End of clause)

52.236-4013 CONTRACTOR-PREPARED NETWORK ANALYSIS SYSTEM
(January 2002 SAS) (Ref. DFARS 236.273)

The progress chart to be prepared by the contractor pursuant to FAR 52.236-15, Schedules for Construction Contracts, shall utilize the Critical Path Method (CPM) of network calculation. (See Attachment 1 to Section 00800).

52.236-4015 PRECONSTRUCTION CONFERENCE (OCT 1988 SAS) (Ref. FAR 36.305)

(a) A preconstruction conference will be arranged by the Area/Resident Engineer after award of contract and before commencement of work. The Area/Resident Engineer will notify the Contractor of the time and date set for the meeting. At this conference, the Contractor shall be oriented with respect to Government procedures and line of authority, contractual, administrative, and construction matters.

(b) The Contractor shall bring to this conference, in completed form, a Certificate of Insurance, plus the following items in either completed or draft form:

Accident Prevention Plan (5 copies)
(use format shown in Attachment 1 to SECTION 00800)
Quality Control Plan (5 copies)
Letter Appointing Superintendent
Transmittal Register
Power of Attorney and Certified Copy of Resolution

Network Analysis System, when applicable
List of Subcontractors

(c) A letter of record will be written documenting all items discussed at the conference, and a copy will be furnished by the Area/Resident Engineer to all in attendance.

(End of clause)

52.236-4016 VIDEO TAPING OPERATING AND MAINTENANCE INSTRUCTIONS (MAR 1987 SASCD-SQ)

For all of the operating and maintenance instructions which are required in the contract specifications, the Contractor shall video tape these instructions as they are presented to the Government representatives. These tapes shall provide clear and understandable detailed instructions for all items required by the contract specifications. The tapes shall be prepared by an experienced video director/cameraman using good quality half-inch VHS color tape with correct sound equipment, lighting, and backdrop. The sound and picture quality shall be high and subject to approval by the Contracting Officer. The tapes are intended as followup training for other Government representatives at a later date. They must be suitable for this purpose. The Contractor shall be responsible for the contents of the instructions and shall verify that they are correct prior to taping. The Contractor may submit individual equipment manufacturer's instructional tape(s), provided they meet the above qualifications and cover the actual equipment that is installed. The tape(s) shall be for specific equipment identified by contents and contract name and number. The Contractor shall submit one copy of the tape(s) to the Contracting Officer for review and approval. Unacceptable tapes are to be corrected by the Contractor as indicated by the Contracting Officer at no additional cost to the Government.

(End of clause)

52.236-4017 SUBMITTAL OF MODIFICATION COST ESTIMATE PROPOSALS (MAR 1992 SAS)
(Ref. DFARS 52.236-7000)

When submittals of Cost Estimate Proposals are required for additions or deletions to work under this contract by modification, the Contractor shall use DA Form 5418-R titled "Cost Estimate Analysis" (see Attachment 1 to SECTION 00800). A separate assemblage will be prepared for submittal by each trade affected by the proposed work.
(End of clause)

52.246-12 INSPECTION OF CONSTRUCTION (AUG 1996)

(a) Definition. "Work" includes, but is not limited to, materials, workmanship, and manufacture and fabrication of components.

(b) The Contractor shall maintain an adequate inspection system and perform such inspections as will ensure that the

work performed under the contract conforms to contract requirements. The Contractor shall maintain complete inspection records and make them available to the Government. All work shall be conducted under the general direction of the Contracting Officer and is subject to Government inspection and test at all places and at all reasonable times before acceptance to ensure strict compliance with the terms of the contract.

(c) Government inspections and tests are for the sole benefit of the Government and do not--

(1) Relieve the Contractor of responsibility for providing adequate quality control measures;

(2) Relieve the Contractor of responsibility for damage to or loss of the material before acceptance;

(3) Constitute or imply acceptance; or

(4) Affect the continuing rights of the Government after acceptance of the completed work under paragraph (i) of this section.

(d) The presence or absence of a Government inspector does not relieve the Contractor from any contract requirement, nor is the inspector authorized to change any term or condition of the specification without the Contracting Officer's written authorization.

(e) The Contractor shall promptly furnish, at no increase in contract price, all facilities, labor, and material reasonably needed for performing such safe and convenient inspections and tests as may be required by the Contracting Officer. The Government may charge to the Contractor any additional cost of inspection or test when work is not ready at the time specified by the Contractor for inspection or test, or when prior rejection makes reinspection or retest necessary. The Government shall perform all inspections and tests in a manner that will not unnecessarily delay the work. Special, full size, and performance tests shall be performed as described in the contract.

(f) The Contractor shall, without charge, replace or correct work found by the Government not to conform to contract requirements, unless in the public interest the Government consents to accept the work with an appropriate adjustment in contract price. The Contractor shall promptly segregate and remove rejected material from the premises.

(g) If the Contractor does not promptly replace or correct rejected work, the Government may (1) by contract or otherwise, replace or correct the work and charge the cost to the Contractor or (2) terminate for default the Contractor's right to proceed.

(h) If, before acceptance of the entire work, the Government decides to examine already completed work by removing it or tearing it out, the Contractor, on request, shall promptly furnish all necessary facilities, labor, and material. If the work is found to be defective or nonconforming in any material respect due to the fault of the Contractor or its subcontractors, the Contractor shall defray the expenses of the examination and of satisfactory reconstruction. However, if the work is found to meet contract requirements, the Contracting Officer shall make an equitable adjustment for the additional services involved in the examination and reconstruction, including, if completion of the work was thereby delayed, an extension of time.

(i) Unless otherwise specified in the contract, the Government shall accept, as promptly as practicable after completion and inspection, all work required by the contract or that portion of the work the Contracting Officer determines can be accepted separately. Acceptance shall be final and conclusive except for latent defects, fraud, gross mistakes amounting to fraud, or the Government's rights under any warranty or guarantee.

(End of clause)

52.246-21 WARRANTY OF CONSTRUCTION (MAR 1994)

(a) In addition to any other warranties in this contract, the Contractor warrants, except as provided in paragraph (i) of this clause, that work performed under this contract conforms to the contract requirements and is free of any defect in equipment, material, or design furnished, or workmanship performed by the Contractor or any subcontractor or supplier at any tier.

(b) This warranty shall continue for a period of 1 year from the date of final acceptance of the work. If the Government takes possession of any part of the work before final acceptance, this warranty shall continue for a period of 1 year from the date the Government takes possession.

(c) The Contractor shall remedy at the Contractor's expense any failure to conform, or any defect. In addition, the Contractor shall remedy at the Contractor's expense any damage to Government-owned or controlled real or personal property, when that damage is the result of--

(1) The Contractor's failure to conform to contract requirements; or

(2) Any defect of equipment, material, workmanship, or design furnished.

(d) The Contractor shall restore any work damaged in fulfilling the terms and conditions of this clause. The Contractor's warranty with respect to work repaired or replaced will run for 1 year from the date of repair or replacement.

(e) The Contracting Officer shall notify the Contractor, in writing, within a reasonable time after the discovery of any failure, defect, or damage.

(f) If the Contractor fails to remedy any failure, defect, or damage within a reasonable time after receipt of notice, the Government shall have the right to replace, repair, or otherwise remedy the failure, defect, or damage at the Contractor's expense.
(g) With respect to all warranties, express or implied, from subcontractors, manufacturers, or suppliers for work performed and materials furnished under this contract, the Contractor shall--

(1) Obtain all warranties that would be given in normal commercial practice;

(2) Require all warranties to be executed, in writing, for the benefit of the Government, if directed by the Contracting Officer; and

(3) Enforce all warranties for the benefit of the Government, if directed by the Contracting Officer.

(h) In the event the Contractor's warranty under paragraph (b) of this clause has expired, the Government may bring suit at its expense to enforce a subcontractor's, manufacturer's, or supplier's warranty.

(i) Unless a defect is caused by the negligence of the Contractor or subcontractor or supplier at any tier, the Contractor shall not be liable for the repair of any defects of material or design furnished by the Government nor for the repair of any damage that results from any defect in Government-furnished material or design.

(j) This warranty shall not limit the Government's rights under the Inspection and Acceptance clause of this contract with respect to latent defects, gross mistakes, or fraud.

(End of clause)

52.249-4001 TIME EXTENSIONS FOR UNUSUALLY SEVERE WEATHER (APR 1991 OCE)
(Ref. FAR 52.249-10)

(a) This provision specifies the procedure for the determination of time extensions for unusually severe weather in accordance with the contract clause entitled DEFAULT (FIXED-PRICE CONSTRUCTION). In order for the Contracting Officer to award a time extension under this clause, the following conditions must be satisfied:

(1) The weather experienced at the project site during the contract period must be found to be unusually severe, that is, more severe than the adverse weather anticipated for the project location during any given month.

(2) The unusually severe weather must actually cause a delay to the completion of the project. The delay must be beyond the control and without the fault or negligence of the Contractor.

(b) The following schedule of monthly anticipated adverse weather delays is based on National Oceanic and Atmospheric Administration (NOAA) or similar data for the project location and will constitute the base line for monthly weather time evaluations. The Contractor's progress schedule must reflect these anticipated adverse weather delays in all weather dependent activities.

MONTHLY ANTICIPATED ADVERSE WEATHER DELAY
WORKDAYS BASED ON 5-DAY WORK WEEK

JAN	FEB	MAR	APR	MAY	JUN	JUL	AUG	SEP	OCT	NOV	DEC
10	9	6	4	4	6	8	7	4	4	5	9

(c) Upon acknowledgment of the Notice to Proceed and continuing through-out the contract, the Contractor will record on the daily Contractor Quality Control report the occurrence of adverse weather and resultant impact to normally scheduled work. Actual adverse weather delay days must prevent work on critical activities for 50 percent or more of the Contractor's scheduled workday. The number of actual adverse weather delay days shall include days impacted by actual adverse weather (even if adverse weather occurred in previous month), be calculated chronologically from the first to the last day in each month, and be recorded as full days. If the number of actual adverse weather delay days exceeds the number of days anticipated in paragraph (b) above, the Contracting Officer will convert any qualifying delays to calendar days, giving full consideration for equivalent fair weather workdays, and issue a modification in accordance with the contract clause entitled DEFAULT (FIXED PRICE CONSTRUCTION).

(End of clause)

52.249-5000 BASIS FOR SETTLEMENT OF PROPOSALS - EFARS

Actual costs will be used to determine equipment costs for a settlement proposal submitted on the total cost basis under FAR 49.206-2(b). In evaluating a terminations settlement proposal using the total cost basis, the following principles will be applied to determine allowable equipment costs:

(1) Actual costs for each piece of equipment, or groups of similar serial or series equipment, need not be available in the contractor's accounting records to determine total actual equipment costs.

(2)If equipment costs have been allocated to a contract using predetermined rates , those charges will be adjusted to actual costs.

(3) Recorded job costs adjusted for unallowable expenses will be used to determine equipment operating expenses.

(4) Ownership costs (depreciation) will be determined using the contractor's depreciation schedule (subject to the provisions of FAR 31.205-11).

(5) License, taxes, storage and insurance costs are normally recovered as an indirect expense and unless the contractor charges these costs directly to contracts, they will be recovered through the indirect expense rate.

(End of Clause)

ATTACHMENT 1 TO SECTION 00800

LIST OF ATTACHMENTS

1. Contract Drawings:

   Volume I - File No. 831-90-02, Sheets 1 through 68
   Volume II - File No. 116-662-02, Sheets 2, 2A, 69 through 158

2. Rates of Wages:

3. Formats:

   Air Force Project Sign

   Corps of Engineers Logo

   Accident Prevention Plan (Ref. FAR 52.236-13 and EM 385-1-1)

   Construction Quality Control Report

   Small and Disadvantaged Business Subcontracting Plan

   Weekly Temporary Electrical Inspection

4. Minimum Standard for Temporary Electrical Service (Ref. FAR 52.236-14)

5. Forms:

   SAS Form 9 - Activity Hazard Analysis

   SAD Form 1666a-R - Safety Checklist for Crawler, Truck & Wheel Mounted Cranes

   SAD Form 1666b-R - Safety Checklist for Portal, Tower, and Pillar Cranes

   SAD Form 1666c-R - Safety Checklist for Rigging

   SAD Form 1666d-R - Safety Checklist for Motor Vehicles, Trailers and Trucks

   SAD Form 1666e-R - Safety Checklist for Crawler Tractors and Dozers

   SAD Form 1666f-R - Safety Checklist for Scrapers, Motor Graders, and Other Mobile Equipment

   SAD Form 1666g-R - Safety Checklist for Material Hoists

   SAD Form 1666h-R - Safety Checklist for Earth Drilling Equipment

   ENG Form 4025 - Transmittal of Shop Drawings, Equipment Data, Material Samples, or Manufacturer's Certificates of Compliance

   DA Form 5418-R - Cost Estimate Analysis

   DD Form 1354 - Transfer and Acceptance of Military Real Property

   Standard Form LLL-A - Disclosure of Lobbying Activities

   Real Property Inventory

General Decision Number NC030011

General Decision Number **NC030011**
Superseded General Decision No. NC020011
State: North Carolina
Construction Type:
HIGHWAY
County(ies):

ALAMANCE	DURHAM	ORANGE
ALEXANDER	FORSYTH	RANDOLPH
BUNCOMBE	FRANKLIN	ROWAN
BURKE	GASTON	STOKES
CABARRUS	GUILFORD	UNION
CATAWBA	LINCOLN	WAKE
CUMBERLAND	MECKLENBURG	YADKIN
DAVIDSON	NEW HANOVER	
DAVIE	ONSLOW	

HIGHWAY CONSTRUCTION PROJECTS (does not include tunnels,building structures in rest area projects, railroad construction, and bascule, suspension and spandrel arch bridges, bridges designed for commercial navigation, and bridges involving marine construction, and other major bridges).

Modification Number	Publication Date
0	06/13/2003

COUNTY(ies):

ALAMANCE	DURHAM	ORANGE
ALEXANDER	FORSYTH	RANDOLPH
BUNCOMBE	FRANKLIN	ROWAN
BURKE	GASTON	STOKES
CABARRUS	GUILFORD	UNION
CATAWBA	LINCOLN	WAKE
CUMBERLAND	MECKLENBURG	YADKIN
DAVIDSON	NEW HANOVER	
DAVIE	ONSLOW	

SUNC3002A 02/12/1990

	Rates	Fringes
CARPENTER	7.63	
CONCRETE FINISHER	7.52	
ELECTRICIAN	10.26	
IRONWORKERS (Reinforcing)	9.76	
LABORER		
Comman	5.33	
Asphalt Lay Down Man	5.60	
Asphalt Raker	6.14	
Form Setter (Road)	8.57	
Mason (Brick, Block, Stone)	7.44	
Pipe Layer	6.23	
Power Tool Operator	8.28	
POWER EQUIPMENT OPERATORS:		
Asphalt Distributor	6.78	
Asphalt Paver	7.47	
Bulldozer	7.33	
Bulldozer (utility)	6.72	
Concrete Curb Machine	7.09	
Concrete Finishing Machine	7.85	

Concrete Paver	6.90
Crane, Backhoe, Shovel, & Draglne (over 1 yd.)	8.16
Crane, Backhoe, Shovel, & Dragline (1 yd. & under)	6.95
Drill Operator	7.34
Grade Checker	5.45
Gradeall	8.38
Greaseman	6.49
Loader	7.09
Mechanic	8.47
Motor Grader (Fine Grade)	8.04
Motor Grader (Rough Grade)	7.68
Oiler	5.88
Roller (Finisher)	6.70
Roller (Rough)	5.65
Scraper	6.63
Screed Asphalt	7.09
Stone Spreader	6.02
Stripping Machine Operator	6.00
Subgrade Machine	7.13
Sweeper	5.80
Tractor (Utility)	5.47
TRUCK DRIVERS:	
Trucks - Single Rear Axle	5.42
Trucks - Multi Rear Axle	6.08
Trucks - Heavy Duty	9.47

WELDERS - Receive rate prescribed for craft performing operation to which welding is incidental.

Unlisted classifications needed for work not included within the scope of the classifications listed may be added after award only as provided in the labor standards contract clauses (29 CFR 5.5(a)(1)(ii)).

In the listing above, the "SU" designation means that rates listed under that identifier do not reflect collectively bargained wage and fringe benefit rates. Other designations indicate unions whose rates have been determined to be prevailing.

WAGE DETERMINATION APPEALS PROCESS

1.) Has there been an initial decision in the matter? This can be:

* an existing published wage determination
* a survey underlying a wage determination
* a Wage and Hour Division letter setting forth a position on a wage determination matter
* a conformance (additional classification and rate) ruling

On survey related matters, initial contact, including requests for summaries of surveys, should be with the Wage and Hour Regional Office for the area in which the survey was conducted because those Regional Offices have responsibility for the Davis-Bacon survey program. If the response from this initial contact is not satisfactory, then the process described in 2.) and 3.) should be followed.

With regard to any other matter not yet ripe for the formal process described here, initial contact should be with the Branch of Construction Wage Determinations. Write to:

Branch of Construction Wage Determinations

Wage and Hour Division
U. S. Department of Labor
200 Constitution Avenue, N. W.
Washington, D. C. 20210

2.) If the answer to the question in 1.) is yes, then an interested party (those affected by the action) can request review and reconsideration from the Wage and Hour Administrator (See 29 CFR Part 1.8 and 29 CFR Part 7). Write to:

Wage and Hour Administrator
U.S. Department of Labor
200 Constitution Avenue, N. W.
Washington, D. C. 20210

The request should be accompanied by a full statement of the interested party's position and by any information (wage payment data, project description, area practice material, etc.) that the requestor considers relevant to the issue.

3.) If the decision of the Administrator is not favorable, an interested party may appeal directly to the Administrative Review Board (formerly the Wage Appeals Board). Write to:

Administrative Review Board
U. S. Department of Labor
200 Constitution Avenue, N. W.
Washington, D. C. 20210

4.) All decisions by the Administrative Review Board are final.

END OF GENERAL DECISION

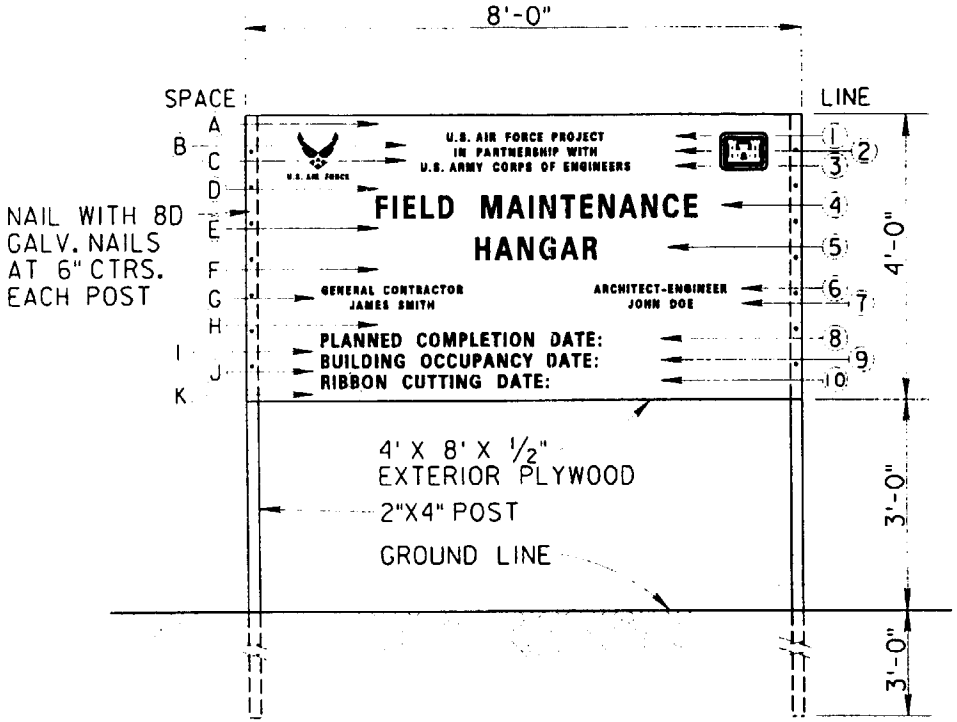

FRONT VIEW

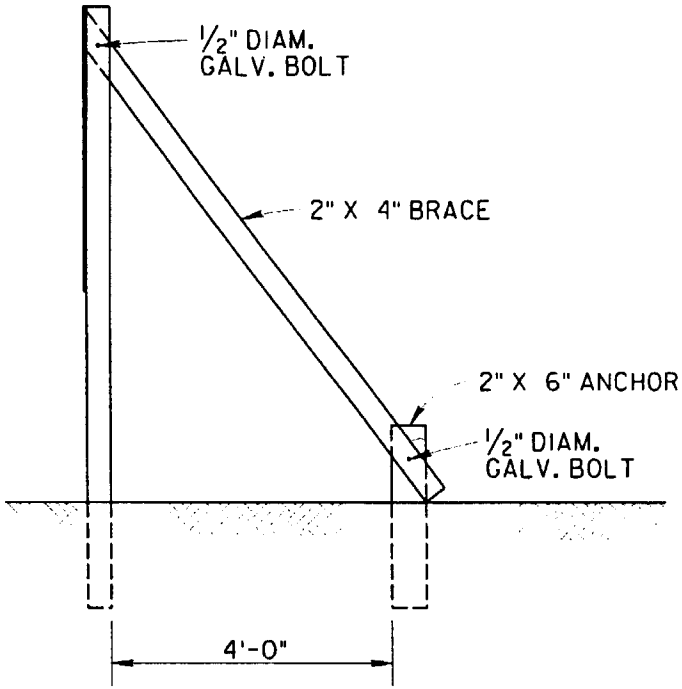

END VIEW

U.S. AIR FORCE PROJECT SIGN DETAILS

NOTES:

1. POSTS SHALL BE S4S.
2. PLYWOOD SHALL BE EXTERIOR TYPE, A-C GRADE.
3. BEFORE PAINTING, SURFACE SHALL BE CLEAN, DRY, FREE OF GREASE AND SANDED.
4. PAINT WITH ONE EXTERIOR OIL PRIME COAT AND EXTERIOR TYPE ALKYD, CONFORMING TO MASTER PAINTERS INSTITUTE MPI-9, MPI GLOSS LEVEL 6. COLOR SHALL MATCH SHERWIN WILLIAMS SW 2175.
5. ALL LETTERING SHALL BE EXTERIOR TYPE ALKYD. COLOR SHALL MATCH SHERWIN WILLIAMS SW 1900.
6. DECALOMANIA FOR CORPS OF ENGINEERS INSIGNIA AND U.S. AIR FORCE EMBLEM WILL BE FURNISHED BY THE CONTRACTING OFFICER FOR INSTALLATION BY THE CONTRACTOR.
7. ALL EXPOSED WOOD (POSTS, SUPPORTS, BACK, ETC.) SHALL BE PAINTED THE SAME BACKGROUND COLOR AS THE SIGN.
8. LETTERING STYLE SHALL BE EITHER HELIOS EXTRA BOLD CONDENSED, HELIOS BOLD II, HELVETICA BLACK ROMAN, OR HELVETICA BOLD ROMAN.

SCHEDULE

SPACE	HEIGHT	LINE	DESCRIPTION	LETTER HEIGHT	STROKE
A	3"	1	U.S. AIR FORCE PROJECT	1.5"	3/16"
B	1"	2	IN PARTNERSHIP WITH	1.5"	3/16"
C	1"	3	U.S. ARMY CORPS OF ENGINEERS	1.5"	3/16"
D	4"	4	PROJECT NAME	4"	1/2"
E	3"	5	PROJECT NAME CONT'D (IF REQ'D)	4"	1/2"
F	4"	6	GENERAL CONTRACTOR/A-E	1.5"	3/16"
G	1"	7	GENERAL CONTRACTOR/A-E	1.5"	3/16"
H	4"	8	PLANNED COMPLETION DATE	2.5"	1/4"
I	1"	9	BUILDING OCCUPANCY DATE	2.5"	1/4"
J	1"	10	RIBBON CUTTING DATE	2.5"	1/4"
K	2"				

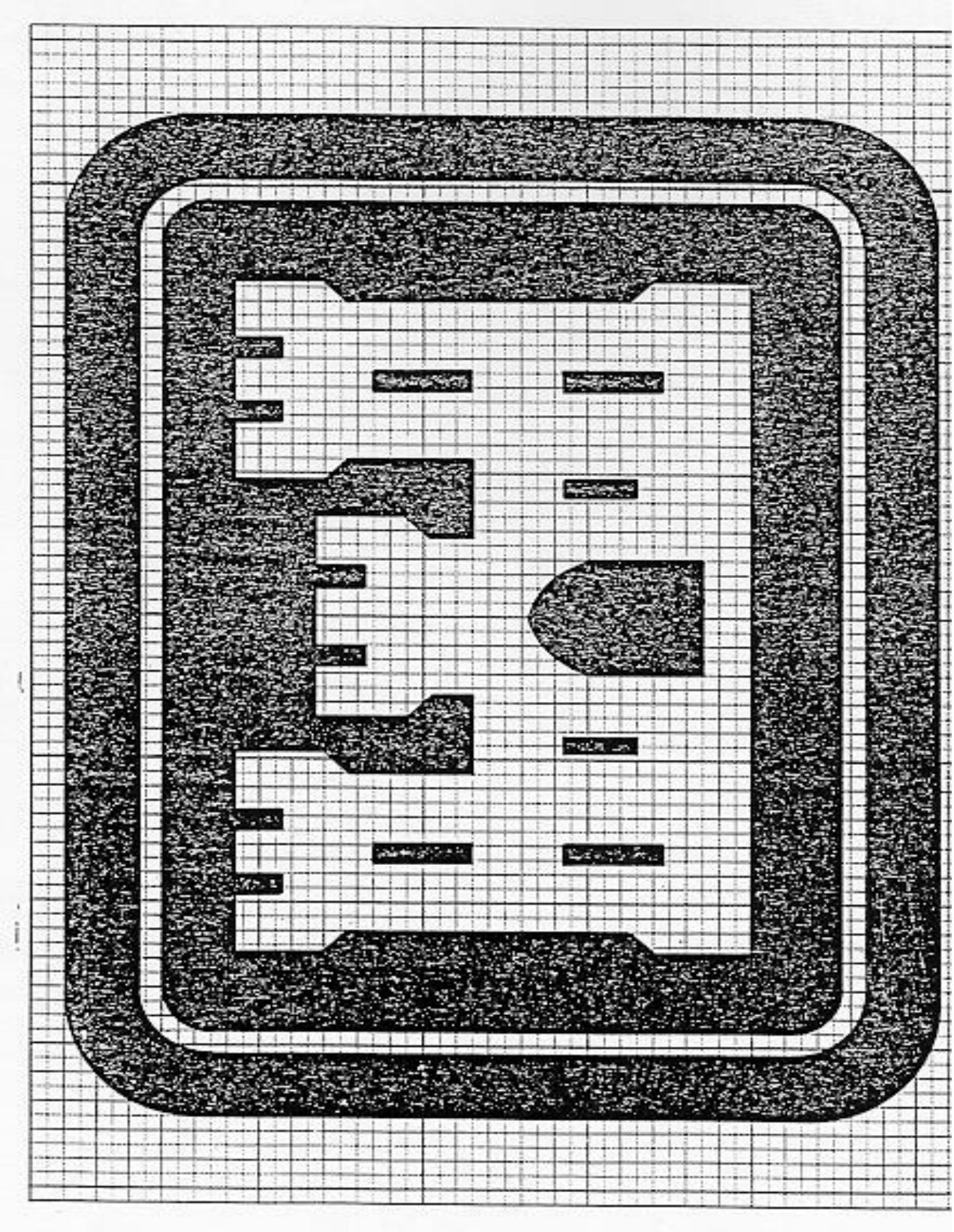

CORPS OF ENGINEERS LOGO
HALF SIZE

Last revised 9 May 97

FORMAT
(Ref. FAR 52.236-13 and EM 385-1-1 dated 3 Sep 96)
ACCIDENT PREVENTION PLAN

MINIMUM BASIC OUTLINE FOR ACCIDENT PREVENTION PLAN

An accident prevention plan is, in essence, a safety and health policy and program document. The following areas are typically addressed in an accident prevention plan, but a plan shall be job specific and shall also address any unusual or unique aspects of the project or activity for which it is written. The accident prevention plan shall interface with the employer's overall safety and health program. Any portions of the overall safety and health program that are referenced in the accident prevention plan shall be included as appropriate.

1. SIGNATURE SHEET. Title, signature, and phone number of the following:

a. Plan preparer (corporate safety staff person, QC);

b. Plan approval, e.g., owner, company president, regional vice president (HTRW activities require approval of a Certified Industrial Hygienist (or qualified Industrial Hygiene personnel for in-house USACE activities; a Certified Safety Professional (or qualified USACE safety personnel for in-house work) may approve the plan for operations involving UST removal where contaminants are known to be petroleum, oils, or lubricants);

c. Plan concurrence (provide concurrence of other applicable corporate and project personnel (contractor)), e.g., Corporate Chief of Operations, Corporate Chief of Safety, Corporate Industrial Hygienist, project manager or superintendent, project safety professional, project QC. The plan will be developed by qualified personnel (plan preparer) and will be signed by a competent person (plan concurrence) and a representative of the prime contractor's project management team (plan approval).

2. BACKGROUND INFORMATION. List the following:

a. Contractor;

b. Contract number;

c. Project name;

d. Brief project description, description of work to be performed, and location (map);

e. Contractor accident experience (provide information such as EMR, OSHA 200 Forms, corporate safety trend analyses);

f. Listing of phases of work and hazardous activities requiring activity hazards analyses.

3. STATEMENT OF SAFETY AND HEALTH POLICY. (In addition to the corporate policy statement, a copy of the corporate safety program may provide a

significant portion of the information required by the accident prevention plan.)

4. RESPONSIBILITIES AND LINES OF AUTHORITIES.

a. Identification and accountability of personnel responsible for safety - at both corporate and project level (contracts specifically requiring safety or industrial hygiene personnel should include a copy of their resume - the District Safety and Occupational Health Office will review the qualifications for acceptance). For items in EM 385-1-1 which require the use of a competent person or a qualified person, the contractor is to maintain documentation demonstrating the competence or qualification of that individual.

b. Lines of authority

5. SUBCONTRACTORS AND SUPPLIERS. Provide the following:

a. Identification of subcontractors and suppliers (if known);

b. Means for controlling and coordinating subcontractors and suppliers;

c. Safety responsibilities of subcontractors and suppliers.

6. TRAINING.

a. List subjects to be discussed with employees in safety indoctrination.

b. List mandatory training and certifications which are applicable to this project (e. g., explosive actuated tools, confined space entry, crane operator, diver, vehicle operator, HAZWOPER training and certification, personal protective equipment) and any requirements for periodic retraining/recertification.

c. Identify requirements for emergency response training.

d. Outline requirements (who attends, when given, who will conduct etc.) for supervisory and employee safety meetings.

e. Identify location at the project site where the records will be maintained.

7. SAFETY AND HEALTH INSPECTIONS. Provide details on:

a. Who will conduct safety inspections (e.g., project manager, safety professional, QC, supervisors, employees, etc.), when inspections will be conducted, how the inspections will be recorded, deficiency tracking system, follow-up procedures, etc;

b. Any external inspections/certifications which may be required (e.g., Coast Guard).

8. SAFETY AND HEALTH EXPECTATIONS, INCENTIVE PROGRAMS, AND COMPLIANCE.

a. The company's written safety program goals, objectives, and accident experience goals for this contract should be provided.

b. A brief description of the company's safety incentive programs (if any) should be provided.

c. Policies and procedures regarding noncompliance with safety requirements (to include disciplinary actions for violation of safety requirements) should be identified.

d. Provide written company procedures for holding managers and supervisors accountable for safety.

9. ACCIDENT REPORTING. The contractor shall identify who shall complete the following, how, and when:

a. Exposure data (man-hours worked);

b. Accident investigations, reports and logs;

c. Immediate notification of major accidents.

10. MEDICAL SUPPORT. Outline on-site medical support and off-site medical arrangements.

11. PERSONAL PROTECTIVE EQUIPMENT. Outline procedures (who, when, how) for conducting hazard assessments and written certifications for use of personal protective equipment.

12. PLANS (PROGRAMS, PROCEDURES) REQUIRED BY THE SAFETY MANUAL (as applicable).

a. Hazard communication program (01.B.04);

b. Emergency response plans:
- procedures and tests (01.E.01)
- spill plans (01.E.01, 06.A.02)
- fire fighting plan (01.E.01, 19.A.04)
- posting of emergency telephone numbers (01.E.04)
- wildfire prevention plan (09.K.01)
- man overboard/abandon ship (19.A.04)

c. Layout plans (04.A.01);

d. Respiratory protection plan (05.E.01);

e. Health hazard control program (06.A.02);

f. Lead abatement plan (06.B.05 & specifications);

g. Asbestos abatement plan (06.B.05 & specifications);

h. Abrasive blasting (06.H.01);

i. Confined space (06.1);

j. Hazardous energy control plan (12.A.07);

k. Critical lift procedures (16.C.17);

l. Contingency plan for severe weather (19.A.03);

m. Access and haul road plan (22.1.10);

n. Demolition plan (engineering and asbestos surveys) (23.A.01);

o. Emergency rescue (tunneling) (26.A.05);

p. Underground construction fire prevention and protection plan (26.D.01);

q. Compressed air plan (26.1.01);

r. Formwork and shoring erection and removal plans (27.B.02);

s. Lift slab plans (27.D.01);

t. SHP and SSHP (for HTRW work an SSHP must be submitted and shall contain all information required by the accident prevention plan - two documents are not required (28.B.01);

u. Blasting plan (29.A.01);

v. Diving plan (30.A.13);

w. Plan for prevention of alcohol and drug abuse (Defense Federal Acquisition Regulation Supplement Subpart 252.223-7004, Drug-Free Work Force).

13. The Contractor shall provide information on how they will meet the requirements of major sections of EM 385-1-1 in the accident prevention plan. Particular attention shall be paid to excavations, scaffolding, medical and first aid requirements, sanitation, personal protective equipment, fire prevention, machinery and mechanized equipment, electrical safety, public safety requirements, and chemical, physical agent, and biological occupational exposure prevention requirements. Detailed site-specific hazards and controls shall be provided in the activity hazard analysis for each phase of the operation. Site-specific hazards are those hazards which would be reasonably be anticipated to occur on the construction site of concern and will be identified through analysis of the activities to be performed. The controls are measures which will be implemented by the contractor to eliminate or reduce each hazard to an acceptable level.

F O R M A T

CONTRACTOR'S NAME
(Address)

CONSTRUCTION QUALITY CONTROL REPORT

Date: _____ Report No. _____

Contract No.: _____

Description and Location of Work: _____

WEATHER: (Clear)(P. Cloudy)(Cloudy); Temperature:___Min,___Max;
Rainfall ___Inches

Contractor/Subcontractors and Area of Responsibility
a._____
b._____
c._____
d._____
e._____
f._____
g._____
h._____

1. Work Performed Today:

(Indicate location and description of work performed. Refer to work performed by prime and/or subcontractors by letter in table above.)

_____

2. Results of Control Activities:

(Indicate whether: P-Preparatory, I-Initial, or F-Followup and include satisfactory work completed or deficiencies with action to be taken.)

_____

3. Test Required by Plans and/or Specifications Performed and Results of Tests:

_____

4. Monitoring of Materials and Equipment:

---

5. Offsite Surveillance Activities:

---

6. Job Safety:

(Daily comment required.)

---

7. Remarks:

a. (Cover any conflicts in plans, specifications or instructions.)

b. (Action taken in review of submittal.)

c. (Verbal instructions received.)

_____
Inspector

CONTRACTOR'S VERIFICATION:

The above report is complete and correct and all material and equipment used and work performed during this reporting period are in compliance with the contract plans and specifications except as noted above.

_____
Contractor's Approved
Authorized Representative

SAMPLE

SMALL AND DISADVANTAGED BUSINESS SUBCONTRACTING PLAN

BETTER BUILDERS, INC.

DATE: February 11, 2003

SOLICITATION NO. DACA21-0X-X-XXXX

TITLE: Barracks Complex, Fort Swampy, Georgia

Type of Work: Design and Construction

In accordance with applicable contract clauses of the solicitation noted above, Better Builders, Inc. submits the following Small Business Subcontracting Plan (includes small, veteran-owned small business, service-disabled veteran-owned small business, HUBZone small business, small disadvantaged business, and women-owned small business concerns).

It is company policy to follow all public laws including P.L. 99-661, Section 1207, P.L. 100-180, Section 806, P.L. 105-135 and P.L. 106-50. We have informed all purchasers to follow these laws in hiring subcontractors and buying materials.

1. The following goals (expressed in terms of percentages of the total dollars available for subcontract/purchase order award) would be applicable to a contract awarded under the cited solicitation. You must also provide the dollar amounts for each of the goals listed below.

    a. Total Proposed Contract Amount: $26,961,000

    b. Total amount available for Subcontract award: $18,300,000

    c. Large Business: $7,832,400 – 42.8%

    d. Total amount to be subcontracted to all small business: $10,467,600 - 57.2%

    e. Small Disadvantaged Business: $1,628,700 – 8.9%

    f. Women-Owned Small Business: $1,482,300 – 8.1%

    g. Service-Disabled Veteran-Owned Small Business: $549,000 - 3%

    h. HUBZone Small Business: $549,000 – 3%

i. There are no options in this solicitation. ***(NOTE: If there are options in the solicitation you must provide the same information as listed in paragraph 1 a-h for each option year/period.)***

j. Indirect and overhead costs have not been included in the goals specified in this section for amounts available for subcontract/purchase order award.

k. Consideration was given to HCBU/MI's but no opportunities were found to be included in the small disadvantaged business goals.

NOTE: While Savannah District does not have a specific goal for subcontracting with Veteran-Owned small business, it must be addressed in any subcontracting plan. However, FAR 52.219-9 requires a goal in your subcontracting plan for Veteran-Owned small business concerns.

2. The following principal products and/or services will be subcontracted under this contract, and the distribution among all small business concerns are as follows:

Large Business - Earthwork
Small Business - Windows and Storm Doors, Recreation, Site Utilities Plumbing
Veteran Owned Small Business – Materials, Equipment
Service Disabled Veteran Owned Small Business – Asphalt, Electrical, Doors
HUBZone Small Business - Window Treatment, HVAC, Concrete
Small Disadvantaged Business - Vinyl Siding, Insulation, Gutters
Women Owned Small Business – Carpentry, Ceramic Tile, Fencing

NOTE: Company names should be provided for each product and/or service listed.

The following method was used in developing our subcontracting goals: (1) all areas of potential subcontract work were determined to be available for subcontract award to all types of small business concerns, and (2) will be actively recruited for participation through the many sources described hereinafter.

3. The following individual will administer this Subcontract Plan on behalf of Better Builders, Inc.:

Name: Freddie Better Title: Executive Vice President

Address and Telephone Number: 4845 Tonka Drive
Fair Haven, CT 27413
800-621-4845

The individual's specific duties with regard to the conduct of our firm's Subcontracting Plan will include, but will not be limited to the following:

a. Developing and maintaining bidders lists of all types of small business concerns using sources such as the Pronet System developed by the Small Business Administration, the Minority Business Development Agency of the U.S. Department of Commerce, Local Minority Business Development Centers and Minority Contractor Associations, and the General Business Services Center in the project's Standard Metropolitan Statistical Area.

b. Assuring the inclusion of all types of small business concerns in all solicitations for products or services which they are capable of providing; and ensuring that all solicitations are structured to permit the maximum possible participation by all types of small business concerns.

c. Establishing and maintaining records of all solicitations and subcontract awards to all types of small business concerns to ensure that the members of the firm who review bidders proposals document their reasons for selecting or not selecting a bid.

d. Preparing and submitting the Subcontracting Report for Individual Contracts (SF 294) and the Summary Subcontract Report (SF 295) in accordance with the instructions provided on the forms, and coordinating and preparing for all compliance reviews by Federal agencies.

e. Conducting or arranging for all other activities necessary to further the intent and attainment of goals of the Plan to include motivational training of the firm's purchasing personnel attendance at workshop, seminars and trade fairs conducted by or on behalf of all types of small business concerns, and general cooperation with members of these concerns or their representatives.

4. The following steps will be taken to ensure that all types of small business concerns receive notice and have an equitable opportunity to compete for intended awards of subcontracts and/or purchase orders for the products and/or services described in paragraph 2 above:

a. Sources will be requested through the SBA's ProNet system, business development organizations, small business trade associations and at small business procurement conferences; sources will be contacted and bidding materials will be provided to all respond ing parties with interest.

b. Internally, motivational training will be conducted to guide and encourage purchasing personnel; source lists and guides to all types of small business concerns will be maintained and utilized by purchasing personnel while soliciting subcontracts and purchase orders; activities will be monitored to ensure sufficient time is allowed for interested bidders to prepare their bids and to evaluate continuing compliance with this Subcontracting Plan.

5. Better Builders, Inc. agrees that the clause entitled "Utilization of Small Business Concerns" will be included in all subcontracts which offer further subcontracting opportunities. All subcontractors, except small business concerns, who receive subcontracts in excess of $500,000 ($1,000,000 in the case of construction) will be required to adopt and comply with a subcontracting plan similar to this one. Such plans will be reviewed to assure that all minimum requirements of an acceptable subcontracting plan have been satisfied.

The acceptability of goals shall be determined on a case-by-case basis depending on the supplies/services involved, the availability of all potential small business and prior experience. Once approved and implemented, plans will be monitored through the submission of periodic reports or, as time and availability of funds permit, periodic visits to subcontractor's facilities to review applicable records and subcontracting program progress.

6. Better Builders, Inc. agrees to submit such periodic reports and cooperate in any studies or surveys as may be required by the Contracting agency or the Small Business Administration in order to determine the extent of compliance by the offeror with the subcontracting plan and with the clause entitled "Utilization of Small Business Concerns" contained in the solicitation.

7. Better Builders, Inc. agrees to maintain at least the following types of records to document compliance with this Subcontracting Plan:

a. The names of all organizations, agencies, and associations contacted for all small business sources, along with records of attendance at conferences, seminars and trade fairs where additional sources were developed.

b. Source lists, guides, and other data identifying all types of small business concerns

c. Records on all subcontract solicitations, on a contract-by-contract basis, indicating (1) whether all types of small business concerns were solicited, and if not, why not; and (2) the reasons for the failure of all solicited small businesses to receive a subcontract award.

d. Records of all subcontract award data, to include subcontractor's name and address, to be kept on a contract-by-contract basis.

e. Minutes of internal motivational and training meetings held for the guidance and encouragement of purchasing personnel, and records of all monitoring activities performed for compliance evaluation.

f. Copies of SF 294 and SF 295 showing date and place of filing and copies of all other reports or results of reviews conducted by the contracting agency or other interested agencies of the Federal government to monitor our compliance with this Subcontracting Plan.

In closing Better Builders, Inc. states that it will be the policy of Better Builders, Inc. to afford every practicable opportunity to all types of small business concerns to participate in construction contracts awarded to Better Builders, Inc. by the Federal Government to ensure that equitable opportunity is provided to all types of small business concerns to compete for award of subcontracts and purchase orders, and to diligently pursue the achievement of our goals by participation of all types of small business concerns in the dollars available for subcontract/purchase order award under the solicitation.

BY_____ DATE _____

_____
Signature

_____
Title, and Company Name

_____ DATE _____
Contract Specialist

Approval Recommended

_____ DATE _____
SADBU

Approve/Disapprove

_____ DATE _____
Contracting Officer

Approve/Disapprove

_____ DATE _____
Procurement Center Representative
Small Business Administration

WEEKLY TEMPORARY ELECTRICAL INSPECTION

Week ending _____

Contract No. _____

Contract Description _____

The following items were inspected in accordance with requirements in National Electrical Code and Corps of Engineers Safety and Health Requirements Manual, EM 385-1-1.

1. Wire (size, type, condition).

2. Systems and devices (polarity, continuity of ground, resistance to ground).

3. Resistance of ground rods (25 OHMS) measured and recorded.

4. Check GFI for 15/20 amp 120 volt circuits.

5. Plugs and receptacles (type, NEMA rating).

6. Circuit breakers and disconnect (size, type, weatherproof).

7. Extension cords (type, UL listed, insulation condition, splices, location).

8. Open wiring on insulators, nonmetallic sheathed cable, outside clearance (600 volts or less), Festoon lighting (as applicable).

_____

Signature Electrician/Electrical Engineer

MINIMUM STANDARD FOR TEMPORARY ELECTRICAL SERVICE

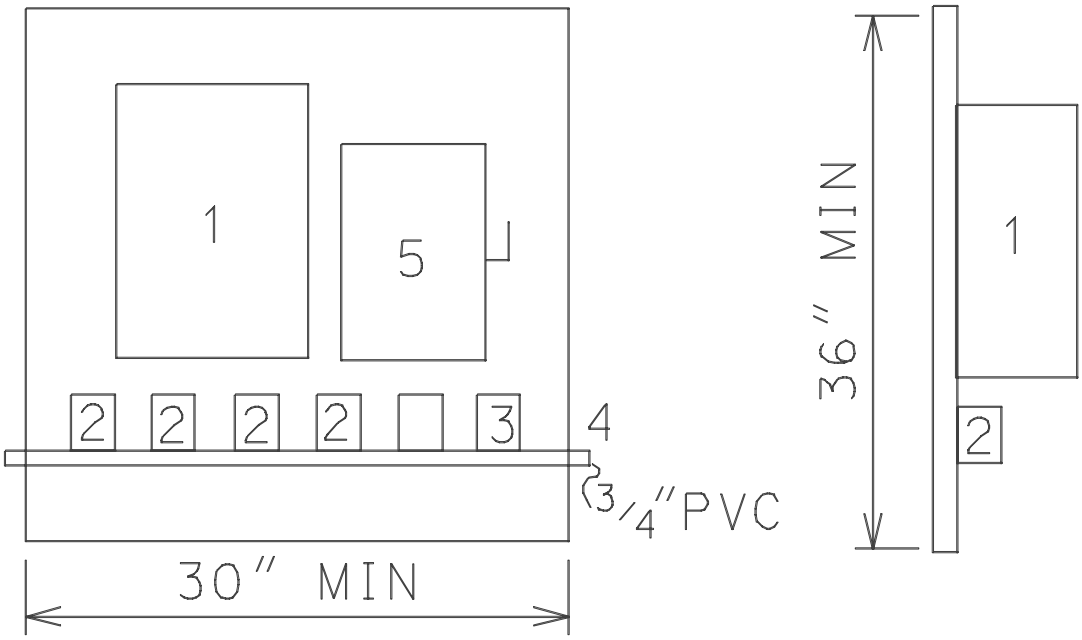

(DIMENSIONS ARE APPROXIMATE)

A. The backboard for temporary service shall consist of not less than 1/2 inch plywood of exterior grade.

B. Numbers above correspond to the item below:

Item 1 - NEMA 3R circuit breaker type panelboard. This panelboard shall consist of 1 two-pole 60 amp main circuit breaker, 4* one pole 20 AMP branch circuit breakers, and 1* two pole 20 AMP branch circuit breaker. Breakers shall meet Federal Specifications Standards for Class 1A breakers and shall be plug-in type. (*Number of breakers to be adjusted to suit the job requirements.)

Item 2 - Duplex grounding type convenience outlets in standard utility type outlet boxes with covers, meeting the NEC and NEMA requirements for wet locations. Connections to the branch circuit breakers shall be grounded by two conductors #12 NMC cable.

Item 3 – (Optional) A single three-conductor grounding type outlet rated for 250 volt service meeting the NEC and NEMA requirements for wet locations. Connections from this outlet to the two pole breaker shall be by two conductor grounded type NMC cable.

Item 4 - 3/4 inch PVC. This shall be used to support extension cords.

Item 5 – NEMA 3R service disconnect safety switch – 60 amp minimum.

C. The panelboard shall be grounded by #6 copper wire connected to a 3/4 inch by 10-foot long ground rod.

D. Service to the panel shall consist of three copper conductor #6 minimum service entrance cable. This cable may enter the top or side of the panelboard.

E. Periodic inspections of systems and devices will be made by the Contractor at intervals not to exceed 1 week, and a report will be submitted indicating the results.

F. All receptacle outlets that provide temporary electrical power during construction, remodeling, maintenance, repair, or demolition shall have ground-fault circuit-interrupter (CFCI) protection for personnel. GFCI protection shall be provided on all circuits serving portable electric hand tools or semi-portable electric power tools (such as block/brick saws, table saws, air compressors, welding machines, and drill presses). See EM 385-1-1 for exceptions.

G. Per EM 385-1-1 all temporary power distribution systems shall be submitted to the field office before installation.

ACTIVITY HAZARD ANALYSIS

1. Phase of Construction		
2. Location	3. Contract No.	4. Project
5. Prime Contractor	6. Date of Preparatory	7. Estimated Start Date
Potential Safety Hazard	Procedure to Control Hazard	
8. Contractor's Representative (signature)	9.	

SAS Form 9
1 Jan 82

SAFETY CHECKLIST FOR CRAWLER, TRUCK & WHEEL MOUNTED CRANES

Contract # and title:	
Equipment name & number: owned or leased?	
Contractor:	Subcontractor:
Contract Inspector:	Date inspected:

	Yes	No	N/A
1. Unless the manufacture has specified an on-rubber rating, outriggers will be fully extended and down? (16.D.10)			
2. Are lattice boom cranes equipped with a boom angle indicator, load indicating device, or a load moment indicator? (16.D.01)			
3. Are lattice boom and hydraulic cranes equipped with a means for the operator to visually determine levelness? (16.D.02)			
4. Are lattice boom and hydraulic cranes, except articulating booms cranes, equipped with drum rotation indicators located for use for the operator? (16.D.03)			
5. Are lattice boom and hydraulic mobile cranes equipped with a boom angle or radius indicator within the operator’s view? (16.D.04)			
6. Are lattice boom cranes, with exception of duty cycle cranes, equipped with an anti-two blocking device? (16.D.05)			
7. When duty cycle machines are required to make a non-duty lift, is the crane equipped with an international orange warning device and is a signal person present? (16.D 05)			
8. Are the following with the crane at all times: (16.C.02) a. the manufacturer’s operating manual? b. the load rating chart? c. the crane’s log book documenting use, maintenance, inspections and tests? d. operating manual for crane operator aids used on the crane.			

	Yes	No	N/A
9. Are the following on the project site: a. completed periodic inspection report prior to initial work? (16.C.12) b. pre-operational checklist used for daily inspection? (16.C.12) c. written reports of the operational performance test? (16.C.13) d. written reports of the load performance test? (16.C.13)			
10. Are all operators physically qualified to perform work? (16.C.05)			
11. Are all operators qualified by written and practical exam or by appropriate licensing agency for the type crane they are to operate? (16.C.05)			
12. Is the crane designed and constructed IAW the standards listed in Table 16-1? (16.C.06)			
13. Is a hazard analysis for set-up and set-down available? (16.C.08)			
14. Are accessible areas within the swing radius of the rear of the crane barricaded? (16.C.09)			
15. Are there at least 3 wraps of cable on the drum? (16.C.10)			
16. Are the hoisting ropes installed IAW the manufacturer’s recommendations? (16.C.10)			
17. Are critical lift plans available? (16.C.18)			
18. Are minimum clearance distance for high voltage lines posted at the operator’s position? (11.E.04)			
19. Do older lattice boom cranes with anti-two block warning devices in lieu of anti-two block prevention devices have a written exemption? (16.D.05)			
20. Is the slow moving emblem used on all vehicles which by design move at 25 MPH or less on public roads? (08.A.04)			
21. Are all vehicles which will be parked or moving slower than normal traffic on haul roads equipped with a yellow flashing light or flasher visible from all directions? (16.A.13)			

	Yes	No	N/A
22. Is all equipment to be operated on public roads provided with: (16A.07) a. headlights? b. brake lights? c. taillights? d. back-up lights? e. front and rear turn signals?			
23. Are seat and seat belts provided for the operator and each rider on equipment? (16.A.07 and 16.B.08)			
24. Is all equipment with windshields equipped with powered wipers and defogging or defrosting devices? (16.A.07)			
25. Is the glass in the windshield or other windows clear and unbroken to provide adequate protection and visiblity for the operator? (16.A.07, 16.B.10)			
26. Is all equipment equipped with adequate service brake system and emergency brake system? (16.A.18)			
27. Are areas on equipment where employees walk or climb equipped with platforms, footwalks, steps, handholds, guardrails, toeboards and non-slip surfaces? (16.B.03)			
28. Is all self propelled equipment equipped with automatic, audible, reverse signal alarms? (16.B.01)			
29. Is there a record of manufacturer’s approval of any modification of equipment which affects its capacity or safe operation? (16.A.18)			
30. Are truck and crawler cranes attached to a barge or pontoon by a slack tiedown system? (16.F.06)			
31. Have the following conditions been met for land cranes mounted on barges or pontoons: (16.F.04) a. Have load ratings been modified to reflect the increased loading from list, trim, wave, and wind action? b. Are all deck surfaces above the water? c. Is the entire bottom area of the barge or pontoon submerged? d. Are tie downs available? e. Are cranes blocked and secured?			
32. Are all belts, gears, shafts, spindles, drums, flywheels, or other rotating parts of equipment guarded where is a potential for exposure to workers? (16.B.03)			

	Yes	No	N/A
33. Is the area where the crane is to work level, firm and secured? (16.A.10)			
34. Is a dry chemical or carbon dioxide fire extinguisher rated at least 5-B:C on the crane? (16.A.26)			
35. Are trucks, for truck mounted cranes, equipped with a working reverse signal alarm? (16.B.01)			
36. Is a signal person provided where there is danger from swinging loads, buckets, booms, etc.? (16.B.13)			
37. Is there adequate clearance from overhead structures and electrical sources for the crane to be operated safely? (16.C.09)			
38. Is there adequate lighting for night operations? (16.C.19)			
39. Has the the boom stop test on cable-supported booms been performed? (16.D.06)			
40. Is the boom disenaging device functioning as required? (16.D.06)			
41. Has all rigging and wire rope been inspected? (Section 15)			
Remarks:(Enter actions taken for all “no” answers.)			
Contractor inspector signature			
Contractor QC/safety officer/project manager signature			

SAFETY CHECKLIST FOR PORTAL, TOWER, AND PILLAR CRANES

Contract # and Title:			
Equipment name & number: owned or leased?			
Contractor:	Subcontractor:		
Contract Inspector:	Date Inspected:		
	Yes	No	N/A
1. Are the following available: (16.E.02) a. written erection instructions? b. listing of the weight of each component? c. an activity hazard analysis for the erection? d. does the activity hazard analysis contain (1.) location of crane and adjacent structures? (2.) foundation design and construction requirements? (3.) clearance and bracing requirements?			
2. Is there a boom angle indicator within the operator's view? (16.E.04)			
3. Are luffing jib cranes equipped with: (16.E.05) a. shock absorbing jib stops? b. jib hoist limit switch? c. jib angle indicator visible to operator?			
4. If used, do rail clamps have slack between the point of attachment to the rail and the end fastened to the crane? (16E.06)			
5. Are the following with the crane at all times: (16.C.02) a. the manufacturer's operating manual? b. the load rating chart? c. the crane's log book documenting use, maintenance, inspections and tests? d. the operating manual for crane operational aids used on the crane?			

	Yes	No	N/A
6. Are the following on the project site: a. completed periodic inspection report prior to initial work? (16.C.12) b. pre-operational checklist used for daily inspections? (16.C.12) c. written reports of the operational performance tests? (16.C.13) d. written reports of the load performance tests? (16.C.13)			
7. Is every crane operator certified by a physician to be physically qualified to perform work? (16.C.05)			
8. Are all operators qualified by written and practical exam or by appropriate licensing agency for the type crane they are to operate? (16.C.05)			
9. Is the crane designed and constructed IAW the standards listed in Table 16-1? (16.C.05)			
10. Is a hazard analysis for set-up and set-down available? (16.C.08)			
11. Are there at least 3 wraps of cable on the drum? (16.C.10)			
12. Are the hoisting ropes installed IAW the manufacturer’s recommendations? (16.C.10)			
13. Is the a record of manufacturer’s approval of any modification of equipment which affects its capacity or safe operation? (16.A.07)			
5. Remarks: (Enter actions taken)			
Contractor inspector signature			
Contractor QC/safety officer/project manager signature			

SAFETY CHECKLIST FOR RIGGING

Contract # and title:			
Equipment name & number: owned or leased?			
Contractor	Subcontractor:		
Contractor inspector:	Date inspected:		
	Yes	No	N/A
1. Has all defective rigging been removed? (15.A.01)			
2. Is rigging stored properly? (15.A.01)			
3. Are running lines within 6.5’ of the ground or working level guarded? (15.A.03)			
4. Are all eye splices made in an approved manner with rope thimbles? (sling eyes excepted) (15.A.04)			
5. Are positive latching devices used to secure loads? (15.A.05)			
6. Are all custom lifting accessories marked to indicate their safe working loads? (15A.07)			
7. Are all custom designed lifting accessories proof-tested to 125% of their rated load? (15.A.07)			
8. Are the following conditions met for wire rope: (15.B.01-09) a. Are they free of rust or broken wires? b. Are defective ropes cut up or marked as unusable? c. Do rope clips attached with U-bolts have the U-bolts on the dead end or short end of the rope? d. Are protruding ends of strands in splices on slings and bridles covered or blunted? e. Except for eye splices in the end of wires and for all endless wire rope slings, are all wire ropes used in hoisting, lowering, or pulling loads one continuous piece, free of knots or splices?			

	Yes	No	N/A
f. Do all eye splices have at least 5 full tucks? g. If used, are wedge sockets fastening attached without attached the dead end of the wire rope to the live rope? h. Are they free of eyes or splices formed by wire rope clips or knots?			
9. Are the following conditions met for chain? (15.C.01-04) a. Are all chains alloyed? b. Do all coupling links or other attachments have rated capacities at least equal to that of the chain. c. Are makeshift fasteners restricted from use?			
10. Are the following conditions met for fiber rope:(15.D.01-07) a. Are all ropes protected from freezing, excessive heat or corrosive materials? b. Are all ropes protected from abrasion? c. Are splices made IAW manufacture's recommendations? d. Do all eye splices in manila rope contain at least 3 full tucks and do all short splices contain at least 6 full tucks(3 on each side of the centerline of the splice)? e. Do all splices in layed synthetic fiber rope contain at least 4 full tucks and do short splices contain at least 8 full tucks (4 on each side of the centerline of the splice)? f. Do the tails of fiber rope splices extend at least 6 rope diameters (for rope 1" diameter or greater) past the last full tuck? g. Are all eye splices large enough to provide an included angle of not greater than 60* at the splice when the eye is placed over the load or support?			
11. Are the following conditions met for all slings:(15.E.01-06) a. Is protection provided between the sling and sharp surfaces? b. Do all rope slings have minimum clear length of 40 times the diameter of component ropes between each end fitting or eye splice? c. Do all braided slings have a minimum clear length of 40 times the diameter of component ropes between each end fitting or eye splice?			

	Yes	No	N/A
d. Do all welded alloy steel chain slings have affixed permanent identification stating size, grade, rated capacity and manufacturer? e. Is each synthetic web sling marked or coded to identify its manufacturer, rated capacities for each type hitch and the type material?			
12. Are drums, sheaves, and pulley smooth and free of surface defects? (15.F.01)			
13. Is the ratio of the diameter of the rigging and the drum, block sheave or pulley thread diameter such that the rigging will adjust without excessive wear, deformation, or damage? (15F.02)			
14. Have all damaged drums, sheaves and pulleys been removed from service? (15.F.04)			
15. Are all connections, fittings, fastenings, and attachments of good quality, proper size and strength, and installed IAW manufacturer's recommendations? (15.F.05)			
16. Are all shackles and hooks sized properly? (15.F.06 & .07)			
17. Are hoisting hooks rated at 10 tons or greater provided with safe handling means? (15.F.07)			
18. Do all drums have sufficient rope capacity? (15.F.08)			
19. Is the drum end of the rope anchored by a clamp securely attached to the drum in a manner approved by the manufacturer? (15.F.08)			
20. Do grooved drums have the correct groove pitch for the diameter of the rope and is the groove depth correct? (15.F.08)			
21. Do the flanges on grooved drums project beyond the last layer of rope at a distance of either 2″ or twice the diameter of the rope, whichever is greater? (15.F.08)			
22. Do the flanges on ungrooved drums project beyond the last layer of rope a distance of either 2.5″ or twice the diameter of the rope, which ever is greater.			

	Yes	No	N/A
23. Are the sheaves compatible with the size of rope used and as specified by the manufacture? (15F.09)			
24. Are sheaves properly aligned, lubricated, and in good condition? (15.F.09)			
25. When rope is subject to riding or jumping off a sheave, are sheaves equipped with cablekeepers? 915.F.09)			
26. Are eye bolts loaded in the plane of the eye and at angles less than 45* to the horizontal? (15.F.10)			
27. Remarks: (Enter actions taken for “no” answers.)			
Contractor inspector signature			
Contractor QC/safety/project manager signature			

SAFETY CHECKLIST FOR MOTOR VEHICLES , TRAILERS AND TRUCKS

Contract # and title: owned or leased?	
Equipment name & number:	
Contractor:	Subcontractor:
Contractor inspector:	Date inspected:

	Yes	No	N/A
1. Are records of safety inspections of all vehicles available? (18.A.02)			
2. Are all vehicles to be operated between sunset and sunrise equipped with: (18.A.04) a. 2 headlights? b. taillights and brake lights? c. front and back turn signals? d. 3 emergency flares, reflective markers, or equivalent portable warning devices?			
3. Are vehicles, except trailers or semi-trailers having a gross weight of 5000 lbs or less, equipped with service brakes and manually operated parking brakes? (18.A.05)			
4. Are service brakes on trailers and semitrailers controlled from the driver’s seat of the prime mover? (18A.06)			
5. Does the vehicle have: (18.A.06) a. a speedometer? b. a fuel gage? c. an audible warning device (horn)? d. a windshield & adequate windshield wiper? e. an operable defroster and defogging device? f. an adequate rearview mirror? g. a cab, cab shield, and other protection to protect the driver from the elements and falling or shifting materials? h. non-slip surfaces on steps? I. a power-operated starting device?			

	Yes	No	N/A
6. Is all the glass safety glass and is all broken or cracked glass replace? (18.A.07)			
7. Do trailers meet the following: (18A.08) a. Are all towing devices adequate for the weight drawn? b. Are all towing devices properly mounted? c. Are locking devices or a double safety system provided on every 5th wheel mechanism and tow bar arrangement to prevent accidental separation? d. Are trailers coupled with safety chains or cables to the towing vehicle? e. Are trailers equipped with the power brakes equipped with a break-away device which will lock-up the brakes in the event the trailer separates from the towing vehicle?			
8. Are all dump trucks:(18.A.10) a. equipped with a holding device to prevent accidental lowering of the body? b. equipped with a hoist lever secured to prevent accidental starting or tipping? c. equipped with means to determine (from the operator’s position) if the dump box is lowered? d. equipped with trip handles for tailgates that allow the operator to be clear?			
9. Are all buses, trucks and combination of vehicles with a carrying capacity of 1.5 tons or more, to be operated on public roads equipped with: (18.A.11) a. 3 reflective markers? b. 2 wheel chocks for each vehicle? c. at least one 2A:10B:C fire extinguisher? d. at least two properly rated fire extinguishers (for vehicles carrying flammable cargo)? e. a red flag not less than 1 foot square.			
10. Is vehicle exhaust controlled so as not to present a hazard to personnel? (18.A.13)			
11. Are all rubber tired motor vehicles equipped with fenders or with mud flaps if the vehicle is not designed for fenders? (18.A.14)			

	Yes	No	N/A
12. Are all vehicles, except buses, equipped with seat belts? (18.B.02)			
13. Does all self-propelled construction and industrial equipment have a working reverse signal alarm? (16.B.01)			
14. Are all hot surfaces of equipment, including exhaust pipes or other lines, guarded or insulated to prevent injury or fire? (16.B.03)			
15. If an off the road vehicle, is it equipped with rollover protective structures? (16.B.12)			
16. Remarks: (Enter actions taken for “no” answers)			
Contractor inspector signature			
Contractor QC/safety officer/project manager signature			

SAFETY CHECKLIST FOR CRAWLER TRACTORS AND DOZERS

Contract # and title:	
Equipment name & number: owned or leased?	
Contractor:	Subcontractor:
Contractor inspector:	Date inspected:

	Yes	No	N/A
1. Are initial and daily/shift inspection records available? (16.A.01& .02)			
2. Are only qualified operators assigned to operate mechanized equipment? (16.A.04)			
3. Are sufficient lights provided for night operations? (16.A.11)			
4. Is the unit shut down before refueling? (16.A.14)			
5. Does the unit have as a minimum a 5-B:C fire extinguisher? (16.A.26)			
6. Is there an effective, working reverse alarm? (16.B.01)			
7. Are moving parts, shafts, sprockets, belts, etc., guarded? (16.B.03 ,07, and 13)			
8. Is protections against hot surfaces, exhausts, etc., provided? (16.B.03 and .13)			
9. Are fuel tanks located in a manner to prevent spills or overflows from running onto engine exhaust or electrical equipment?			

	Yes	No	N/A
10. Are exhaust discharges directed so they do not endanger person of obstruct operator vision?(16.B.05)			
11. Are seat belts provided? (16B.08)			
12. Is protection (grills, canopies, screens) provided to shield operator from falling or flying objects? (16.B.10 and .11)			
13. Is roll over protection provided? (16.B.12)			
14. Remarks: (Enter actions taken for “no” answers)			
Contractor inspector signature			
Contractor QC/safety officer/project manager signature			

SAFETY CHECKLIST FOR SCRAPERS, MOTOR GRADERS , AND OTHER MOBILE EQUIPMENT

Contract # and title:	
Equipment name and number: owned or leased?	
Contractor:	Subcontractor:
Contractor inspector:	Date inspected:

	Yes	No	N/A
1. Are initial and daily/shift inspection records available? (16.A.01 & .02)			
2. Are only qualified operators assigned to operate equipment? (16.A.04)			
3. Are sufficient lights provided for night operations? (16.A.11)			
4. Does the unit have as a minimum a 5-B:C fire extinguisher? (16.A.26)			
5. Is there an effective working reverse alarm? (16.B.01)			
6. Is the unit shut down for refueling? (16.A.14)			
7. Are moving parts, shafts, sprockets, belts, etc., guarded? (16.B.03, .07 and .13)			
8. Is protection against hot surfaces, exhausts, etc., provided? (16.B.03 and .13)			
9. Are fuel tanks located in a manner to prevent spills or overflow from running onto engine exhaust or electrical equipment? (16.B.04)			
10. Are exhaust discharges directed so they do not endanger persons or obstruct operator vision? (16.B.05)			

	Yes	No	N/A
11. Are seat belts provided for each person required to ride on the equipment? (16.B.08)			
12. Is protection (grills, canopies, screens) provided to shield operators from falling or flying objects? (16.B.10 and .11)			
13. Is roll over protection provided? (16.B.12)			
14. Is a safe means of access to the cab provided (steps, grab bars, non-slip surfaces)? (16.B.03)_			
15. Are adequate head and tail lights provided? (16.A.07)			
16. Have brakes been tested and found satisfactory? (16.A.07)			
17. Does the unit have an emergency brake which will automatically stop the equipment upon brake failure? Is this system manually operable from the drivers position? (16.A.07)			
18. Is all equipment with windshields equipped with powered wipers and defogging or defrosting system? (16.A.07)			
19. Are all vehicles which will be parked or moving slower than normal traffic on haul roads equipped with a yellow flashing light or flasher visible from all directions? (16.A.13)			
20. Is the slow moving emblem used on all vehicles which by design move at 25 MPH or less on public roads? (08A.04)			

	Yes	No	N/A
21. Have air tanks been tested and certified? (20.A.01)			
22. Is an air pressure gage in working condition installed on the unit? (20.A.12)			
23. Does the air tank have an accessible drain valve? (20.B.17)			
24. Remarks: (Enter action taken for all “no” answers)			
Contractor inspector signature			
Contractor QC/safety officer/project manager			

SAFETY CHECKLIST FOR MATERIAL HOISTS

Contract # and title:	
Equipment name & number:	
Contractor:	Subcontractor:
Contract Inspector:	Date inspected:

	Yes	No	N/A
1. Are all hoist towers, masts, guys or braces, counterweights, drive machinery supports, sheave supports, platforms, supporting structures, and accessories designed by a licensed engineer? (16.K.02)			
2. Is a copy of the hoist operating manual available? (16.K.04)			
3. Do all floors and platforms have slip-resistant surfaces? (16.K.08)			
4. Are landings and runways adequately barricaded and is overhead protection provided where needed? (16.K.08)			
5. Are hoisting ropes installed IAW manufacturer's instructions? (16.K.10)			
6. Are operating rules posted at the hoist operator's station? (16.K.14)			
7. Are air powered hoists connected to an air supply of sufficient capacity and pressure to safely operate the hoist? (16.K.15)			
8. Are pneumatic hoses secured by some positive means to prevent accidental disconnection? (16.K.15)			
9. Remarks: (Enter actions taken for all "no" answers.)			
Contractor inspector signature			
Contractor QC/safety officer/project manager signature			

SAD Form 1666g-R Mar 97 Previous editions may be used for contracts referencing the 1992 edition of EM 385-1-1.

SAFETY CHECKLIST FOR EARTH DRILLING EQUIPMENT

Contract # and title:	
Equipment name & number:	
Contractor:	Subcontractor:
Contractor inspector:	Date inspected:

	Yes	No	N/A
1. Is a copy of the manual for all drilling equipment available? (16.M.01)			
2. Have all overhead electrical hazards and potential ground hazards been identified in a site layout plan and addressed in an activity hazard analysis? (16.M.02)			
3. Are MSDSs for all drilling fluids available? (16.M.05)			
4. Does the drilling equipment have 2 easily accessible emergency shut down devices (one for the operator and one for the helper)? (16.M.06)			
5. Is the equipment posted with a warning of electrical hazards? (16.M.06)			
6. Is there a spotter or an electrical proximity warning device available to ensure safe distances from power lines are maintained? (16.M.06)			
7. Remarks: (Enter actions taken for “no” answers)			
Contractor inspector signature			
Contractor QC/safety officer/project manager			

SAD Form 1666h-R Mar 97 Previous editions may be used for contracts referencing the 1992 edition of EM 385-1-1.

TRANSMITTAL OF SHOP DRAWINGS, EQUIPMENT DATA, MATERIAL SAMPLES, OR MANUFACTURER'S CERTIFICATES OF COMPLIANCE *(Read instructions on the reverse side prior to initiating this form)*	DATE	TRANSMITTAL NO.

SECTION I - REQUEST FOR APPROVAL OF THE FOLLOWING ITEMS *(This section will be initiated by the contractor)*

TO:	FROM:	CONTRACT NO.	CHECK ONE: ☐ THIS IS A NEW TRANSMITTAL ☐ THIS IS A RESUBMITTAL OF TRANSMITTAL _____
SPECIFICATION SEC. NO. *(Cover only one section with each transmittal)*	PROJECT TITLE AND LOCATION		CHECK ONE: THIS TRANSMITTAL IS FOR ☐ FIO ☐ GOV'T. APPROVAL

ITEM NO. *a.*	DESCRIPTION OF ITEM SUBMITTED *(Type size, model number/etc.)* *b.*	MFG OR CONTR. CAT., CURVE DRAWING OR BROCHURE NO. *(See instruction no. 8)* *c.*	NO. OF COPIES *d.*	CONTRACT REFERENCE DOCUMENT		FOR CONTRACTOR USE CODE *g.*	VARIATION *(See instruction No. 6)* *h.*	FOR CE USE CODE *i.*
				SPEC. PARA. NO. *e.*	DRAWING SHEET NO. *f.*			

REMARKS	I certify that the above submitted items have been reviewed in detail and are correct and in strict conformance with the contract drawings and specifications except as other wise stated. NAME AND SIGNATURE OF CONTRACTOR

SECTION II - APPROVAL ACTION

ENCLOSURES RETURNED *(List by Item No.)*	NAME, TITLE AND SIGNATURE OF APPROVING AUTHORITY	DATE

INSTRUCTIONS

1. Section I will be initiated by the Contractor in the required number of copies.

2. Each transmittal shall be numbered consecutively in the space provided for "Transmittal No.". This number, in addition to the contract number, will form a serial number for identifying each submittal. For new submittals or resubmittals mark the appropriate box; on resubmittals, insert transmittal number of last submission as well as the new submittal number.

3. The "Item No." will be the same "Item No." as indicated on ENG FORM 4288-R for each entry on this form.

4. Submittals requiring expeditious handling will be submitted on a separate form.

5. Separate transmittal form will be used for submittals under separate sections of the specifications.

6. A check shall be placed in the "Variation" column when a submittal is not in accordance with the plans and specifications--also, a written statement to that effect shall be included in the space provided for "Remarks".

7. Form is self-transmittal, letter of transmittal is not required.

8. When a sample of material or Manufacturer's Certificate of Compliance is transmitted, indicate "Sample" or "Certificate" in column c, Section I.

9. U.S. Army Corps of Engineers approving authority will assign action codes as indicated below in space provided in Section I, column i to each item submitted. In addition they will ensure enclosures are indicated and attached to the form prior to return to the contractor. The Contractor will assign action codes as indicated below in Section I, column g, to each item submitted.

THE FOLLOWING ACTION CODES ARE GIVEN TO ITEMS SUBMITTED

A -- Approved as submitted.

B -- Approved, except as noted on drawings.

C -- Approved, except as noted on drawings.
Refer to attached sheet resubmission required.

D -- Will be returned by separate correspondence.

E -- Disapproved (See attached).

F -- Receipt acknowledged.

FX -- Receipt acknowledged, does not comply as noted with contract requirements.

G -- Other *(Specify)*

10. Approval of items does not relieve the contractor from complying with all the requirements of the contract plans and specifications.

(Reverse of ENG Form 4025-R)

COST ESTIMATE ANALYSIS

For use of this form, see TM 5-800-2; the proponent agency is USACE.

PROJECT	INVITATION/CONTRACTOR	EFFECTIVE PRICING DATE	DATE PREPARED
LOCATION	CODE (Check one) ☐ A ☐ B ☐ C ☐ OTHER	DRAWING NO.	SHEET OF SHEETS
		ESTIMATOR	CHECKED BY

TASK DESCRIPTION	QUANTITY		LABOR				EQUIPMENT		MATERIAL		TOTAL	SHIPPING	
	NO. OF UNITS	UNIT MEAS	MH UNIT	TOTAL HRS	UNIT PRICE	COST	UNIT PRICE	COST	UNIT PRICE	COST		UNIT WT	TOTAL WT
TOTAL THIS SHEET													

DA FORM 5418-R, Apr 85

TRANSFER AND ACCEPTANCE OF MILITARY REAL PROPERTY

Form Approved
OMB No. 0704-0188

PAGE OF PAGES

Public reporting burden for this collection of information is estimated to average 30 minutes per response, including the time for reviewing instructions, searching existing data sources, gathering and maintaining the data needed, and completing and reviewing the collection of information. Send comments regarding this burden estimate or any other aspect of this collection of information, including suggestions for reducing this burden, to Washington Headquarters Services, Directorate for Information Operations and Reports, 1215 Jefferson Davis Highway, Suite 1204, Arlington, Va 22202-4302, and to the Office of Management and Budget, Paperwork Reduction Project (0704-0188), Washington, DC 20503.

1. **FROM** *(Installation/Activity/Service and Zip code)*	2. OPERATING UNIT	3. DISTRICT CODE	4. OPERATING AGENCY	5. DATE	6. JOB NUMBER	7. SERIAL NUMBER	8. CONTRACT NUMBER

9. **TO** *(Installation/Activity/Service and Zip code)*	10. OPERATING UNIT	11. DISTRICT CODE	12. OPERATING AGENCY	13. ACCOUNTING NUMBER	14. ACCOUNTABLE OFFICE NUMBER	15. TYPE OF TRANSACTION		16. PROJECT NUMBER
						A. ☐ NEW CONSTR. ☐ EXISTING FAC. ☐ CAPITAL IMP. ☐ OTHER *(Specify)*	B. ☐ BENF/O ☐ PHYSICAL COM. ☐ FINAN. COM. ☐ OTHER *(Specify)*	

ITEM NO. 17	CATEGORY CODE 18	FACILITY *(Category description)* 19	NO. OF UNITS 20	TYPE 21	UNIT OF MEAS. 22	TOTAL QUANTITY 23	COST 24	DRAWING NUMBERS 25	REMARKS 26

27.		28. ACCEPTED BY *(Signature)*	DATE
TRANSFERRED BY *(Signature)*	DATE	TITLE *(Post Engr./Base Civ. Engr./Navy Rep.)*	29. PROPERTY VOUCHER NUMBER
TITLE *(Area Engr./Base Engr./DPWO)*			

30. CONSTRUCTION DEFICIENCIES

31. REMARKS

INSTRUCTIONS

This form has been designed and issued for use in connection with the transfer of military real property between the military departments and to or from other government agencies. It supersedes ENG Forms 290 and 290B (formerly used by the Army and Air Force) and NAVDOCKS Form 2317 (formerly used by the Navy).

Existing instructions issued by the military departments relative to the preparation of the three superseded forms are applicable to this form to the extent that the various items and columns on the superseded forms have been retained. Additional instructions, as appropriate, will be promulgated by the military departments in connection with any new items appearing hereon.

With the issuance of this DD form, it is not intended that the departments shall revise and reprint manuals and directives simply to show the number of this DD form. Such action can be accomplished through the normal course of revision for other reasons.

Approved by OM 0348-0046

DISCLOSURE OF LOBBYING ACTIVITIES

Complete this form to disclose lobbying activities pursuant to 31 U.S.C. 1352
(See reverse for public burden disclosure.)

1. Type of Federal Action:

☐ a. contract
b. grant
c. cooperative agreement
d. loan
e. loan guarantee
f. loan insurance

2. Status of Federal Action:

☐ a. bid/offer/application
b. initial award
c. post-award

3. Report Type:

☐ a. initial filing
b. material change

For Material Change Only:
year _____ quarter _____
date of last report _____

4. Name and Address of Reporting Entity:

☐ Prime ☐ Subawardee
Tier _____, *if known*:

Congressional District, *if known:*

5. If Reporting Entity in No. 4 is Subawardee, Enter Name and Address of Prime:

Congressional District, *if known*:

6. Federal Department/Agency:

7. Federal Program Name/Description:

CFDA Number, *if applicable*: _____

8. Federal Action Number, *if known*:

9. Award Amount, *if known*:

$

10. a. Name and Address of Lobbying Entity
(*if individual, last name, first name, MI):*

b. Individuals Performing Services *(including address if different from No. 10a)*
(last name, first name, MI):

(attach Continuation Sheet(s) SF-LLL-A, *if necessary*)

11. Amount of Payment *(check all that apply)*:

$ _____ ☐ actual ☐ planned

12. Form of Payment *(check all that apply)*:

☐ a. cash
☐ b. in-kind; specify: nature _____
value _____

13. Type of Payment *(check all that apply)*:

☐ a. retainer
☐ b. one-time fee
☐ c. commission
☐ d. contingent fee
☐ e. deferred
☐ f. other; specify: _____

14. Brief Description of Services Performed or to be Performed and Date(s) of Service, including officer(s), employee(s), or Member(s) contacted, for Payment indicated in Item 11:

(attach Continuation Sheet(s) SF-LLL-A, *if necessary*)

15. Continuation Sheet(s) SF-LLL-A attached: ☐ Yes ☐ No

16. Information requested through this form is authorized by title 31 U.S.C section 1352. This disclosure of lobbyig activities is a materia representation of fact upon which reliance was placed by the tier above when this transaction was made or entered into. This disclosure is required pursuant to 31 U.S.C. 1352 . This information will be reported to the Congress semi-annually and will be available for public inspection. Any person who fails to

Signature: _____

Print Name: _____

Title: _____

Telephone No.: _____ **Date:** _____

Federal Use Only:

Authorized for Local Reproduction

INSTRUCTIONS FOR COMPLETION OF SF-LLL, DISCLOSURE OF LOBBYING ACTIVITIES

This disclosure form shall be completed by the reporting entity, whether subawardee or prime Federal recipient, at the initiation or receipt of a covered Federal action, or a material change to a previous filing, pursuant to title 31 U.S.C. section 1352. The filing of a form is required for each payment or agreement to make payment to any lobbying entity for influencing or attempting to influence an officer or employee of any agency, a Member of Congress, an officer or employee of Congress, or an employee of a member of Congress in connection with a covered Federal action. Use the SF-LLL-A Continuation Sheet for additional information if the space on the form is inadequate. Complete all items that apply for both the initial filing and material change report. Refer to the implementing guidance published by the Office of Management and Budget for additional information.

1. Identify the type of covered Federal action for which lobbying activity is and/or has been secured to influence the outcome of a covered Federal action.

2. Identify the status of the covered Federal action.

3. Identify the appropriate classification of this report. If this is a followup report caused by a material change to the information previously reported, enter the year and quarter in which the change occurred. Enter the date of the last previously submitted report by this reporting entity for this covered Federal action.

4. Enter the full name, address, city, state and zip code of the reporting entity. Include Congressional District, if known. Check the appropriate classification of the reporting entity that designates if it is, or expects to be, a prime or subaward recipient. Identify the tier of the subawardee, e.g., the first subawardee of the prime is the 1st tier. Subawards include but are not limited to subcontracts, subgrants and contract awards under grants.

5. If the organization filing the report in item 4 checks “Subawardee”, then enter the full name, address, city, state and zip code of the prime Federal recipient. Include Congressional District, if known.

6. Enter the name of the Federal agency making the award or loan commitment. Include at least one organizational level below agency name, if known. For example, Department of Transportation, United States Coast Guard.

7. Enter the Federal program name or description for the covered Federal action (item 1). If known, enter the full Catalog of Federal Domestic Assistance (CFDA) number for grants, cooperative agreements, loans, and loan commitments.

8. Enter the most appropriate Federal identifying number available for the Federal action identified in item 1 (e.g., Request for Proposal (RFP) number; Invitation for Bid (IFB) number; grant announcement number; the contract, grant, or loan award number; the application/proposal control number assigned by the Federal agency). Include prefixes, e.g., “RFP-DE-90-001.”

9. For a covered Federal action where there has been an award or loan commitment by the Federal agency, enter the Federal amount of the award/loan commitment for the prime entity identified in item 4 or 5.

10. (a) Enter the full name, address, city, state and zip code of the lobbying entity engaged by the reporting entity identified in item 4 to influence the covered Federal action.

    (b) Enter the full names of the individuals(s) performing services, and include full address if different from 10 (a). Enter Last Name, First Name, and Middle Initial (MI).

11. Enter the amount of compensation paid or reasonably expected to be paid by the reporting entity (item 4) to the lobbying entity (item 10). Indicate whether the payment has been made (actual) or will be made (planned). Check all boxes that apply. If this is a material change report, enter the cumulative amount of payment made or planned to be made.

12. Check the appropriate box(es). Check all boxes that apply. If payment is made through an in-kind contribution, specify the nature and value of the in-kind payment.

13. Check the appropriate box(es). Check all boxes that apply. If other, specify nature.

    Provide a specific and detailed description of the services that the lobbyist has performed, or will be expected to perform, and the date(s) of any services rendered. Include all preparatory and related activity, not just time spent in

Public reporting burden for this collection of information is estimated to average 30 minutes per response, including time for reviewing instructions, searching existing data sources, gathering and maintaining the data needed, and completing and reviewing the collection of information. Send comments regarding the burden estimate or any other aspect of this collection of information, including suggestions for reducing this burden, to the Office of Management and Budget, Paperwork Reduction Project (0348-0046), Washington, D.C. 20503.

DISCLOSURE OF LOBBYING ACTIVITIES
CONTINUATION SHEET

Approved by OM
0348-0046

Reporting Entity: _____ Page ____ of ____ ____

*U.S. G.P.O. 1990-260-708:00012

REAL PROPERTY INVENTORY

ITEM	TALLY	TOTAL
COMMODES		
LAVATORIES		
URINALS		
EXHAUST FAN (9")		
EXHAUST FAN (OTHER)		
WATER COOLER		
HOTWATER HEATER		
MOP SINK		
AC PLANT	LS 5 TN. 5-25 TN. 25-100 TN. OVER 100 TN.	
AS (WINDOW TYPE)		
FIRE ALARM SYSTEM	MANUAL HALON SPRINKLER	
EMERGENCY LIGHTS		
UNIT HEATER		
STRIP HEATER		
COOLING TOWER		
WALK-IN COOLER		
AIR CURTAIN		
EYE WASH		
SHOWERS		
BOILER	GAS FIRED OIL FIRED STEAM	
FUEL TANK	UNDERGROUND OUTSIDE	

REAL PROPERTY INVENTORY

ITEM	TALLY	TOTAL
WASH BASIN		
AIR COMPRESSOR		
HOISTS		
INVENTORY BY:		DATA:
RECONCILED BY:		DATA:

REAL PROPERTY INVENTORY

ITEM	TALLY	TOTAL
INVENTORIED BY:		DATE:
RECONCILED BY:		DATE:

PROJECT TABLE OF CONTENTS

DIVISION 01 - GENERAL REQUIREMENTS

01312A QUALITY CONTROL SYSTEM (QCS)
01330 SUBMITTAL PROCEDURES
01356A STORM WATER POLLUTION PREVENTION MEASURES
01420 SOURCES FOR REFERENCE PUBLICATIONS
01451A CONTRACTOR QUALITY CONTROL
01500 TEMPORARY CONSTRUCTION FACILITIES
01670 RECYCLED / RECOVERED MATERIALS
01780A CLOSEOUT SUBMITTALS

DIVISION 02 - SITE WORK

02013 ENVIRONMENTAL PROTECTION DURING CONSTRUCTION
02220 DEMOLITION
02230 CLEARING AND GRUBBING
02300 EARTHWORK
02315 EXCAVATION, FILLING AND BACKFILLING FOR BUILDINGS
02316 EXCAVATION, TRENCHING, AND BACKFILLING FOR UTILITIES SYSTEMS
02390a GROUNDING POINTS (TIE-DOWN ANCHOR) FOR AIRCRAFT
02510A WATER DISTRIBUTION SYSTEM
02620a SUBDRAINAGE SYSTEM
02630a STORM-DRAINAGE SYSTEM
02714A DRAINAGE LAYER
02722a GRADED-CRUSHED AGGREGATE BASE COURSE (SEPARATION LAYER AND BASE COURSE)
02748A BITUMINOUS TACK AND PRIME COATS
02749 HOT-MIX ASPHALT (HMA) FOR AIRFIELDS
02753A CONCRETE PAVEMENT FOR AIRFIELDS AND OTHER HEAVY-DUTY PAVEMENTS
02762a COMPRESSION JOINT SEALS FOR CONCRETE PAVEMENTS
02763a PAVEMENT MARKINGS
02936 TURF - GRASS SEEDING

DIVISION 16 - ELECTRICAL

16375A ELECTRICAL DISTRIBUTION SYSTEM, UNDERGROUND
16526A AIRFIELD AND HELIPORT LIGHTING AND VISUAL NAVIGATION AIDS

-- End of Project Table of Contents --

SECTION TABLE OF CONTENTS

DIVISION 01 - GENERAL REQUIREMENTS

SECTION 01312A

QUALITY CONTROL SYSTEM (QCS)

08/02

1.1 GENERAL
1.1.1 Correspondence and Electronic Communications
1.1.2 Other Factors
1.2 QCS SOFTWARE
1.3 SYSTEM REQUIREMENTS
1.4 RELATED INFORMATION
1.4.1 QCS User Guide
1.4.2 Contractor Quality Control(CQC) Training
1.5 CONTRACT DATABASE
1.6 DATABASE MAINTENANCE
1.6.1 Administration
1.6.1.1 Contractor Information
1.6.1.2 Subcontractor Information
1.6.1.3 Correspondence
1.6.1.4 Equipment
1.6.1.5 Management Reporting
1.6.2 Finances
1.6.2.1 Pay Activity Data
1.6.2.2 Payment Requests
1.6.3 Quality Control (QC)
1.6.3.1 Daily Contractor Quality Control (CQC) Reports.
1.6.3.2 Deficiency Tracking.
1.6.3.3 Three-Phase Control Meetings
1.6.3.4 Accident/Safety Tracking.
1.6.3.5 Features of Work
1.6.3.6 QC Requirements
1.6.4 Submittal Management
1.6.5 Schedule
1.6.6 Import/Export of Data
1.7 IMPLEMENTATION
1.8 DATA SUBMISSION VIA COMPUTER DISKETTE OR CD-ROM
1.8.1 File Medium
1.8.2 Disk or CD-ROM Labels
1.8.3 File Names
1.9 MONTHLY COORDINATION MEETING
1.10 NOTIFICATION OF NONCOMPLIANCE

-- End of Section Table of Contents --

SECTION 01312A

QUALITY CONTROL SYSTEM (QCS)
08/02

1.1 GENERAL

The Government will use the Resident Management System for Windows (RMS) to assist in its monitoring and administration of this contract. The Contractor shall use the Government-furnished Construction Contractor Module of RMS, referred to as QCS, to record, maintain, and submit various information throughout the contract period. The Contractor module, user manuals, updates, and training information can be downloaded from the RMS web site.This joint Government-Contractor use of RMS and QCS will facilitate electronic exchange of information and overall management of the contract. QCS provides the means for the Contractor to input, track, and electronically share information with the Government in the following areas:

Administration
Finances
Quality Control
Submittal Monitoring
Scheduling
Import/Export of Data

1.1.1 Correspondence and Electronic Communications

For ease and speed of communications, both Government and Contractor will, to the maximum extent feasible, exchange correspondence and other documents in electronic format. Correspondence, pay requests and other documents comprising the official contract record shall also be provided in paper format, with signatures and dates where necessary. Paper documents will govern, in the event of discrepancy with the electronic version.

1.1.2 Other Factors

Particular attention is directed to Contract Clause, "Schedules for Construction Contracts", Contract Clause, "Payments", Section 01320A, PROJECT SCHEDULE, Section 01330, SUBMITTAL PROCEDURES, and Section 01451A, CONTRACTOR QUALITY CONTROL, which have a direct relationship to the reporting to be accomplished through QCS. Also, there is no separate payment for establishing and maintaining the QCS database; all costs associated therewith shall be included in the contract pricing for the work.

1.2 QCS SOFTWARE

QCS is a Windows-based program that can be run on a stand-alone personal computer or on a network. The Government will make available the QCS software to the Contractor after award of the construction contract. Prior to the Pre-Construction Conference, the Contractor shall be responsible to download, install and use the latest version of the QCS software from the Government's RMS Internet Website. Upon specific justification and request by the Contractor, the Government can provide QCS on 3-1/2 inch high-density diskettes or CD-ROM. Any program updates of QCS will be made available to the Contractor via the Government RMS Website as they become

available.

1.3 SYSTEM REQUIREMENTS

The following listed hardware and software is the minimum system configuration that the Contractor shall have to run QCS:

Hardware

IBM-compatible PC with 500 MHz Pentium or higher processor

128+ MB RAM for workstation / 256+ MB RAM for server

1 GB hard drive disk space for sole use by the QCS system

3 1/2 inch high-density floppy drive

Compact disk (CD) Reader, 8x speed or higher

SVGA or higher resolution monitor (1024 x 768, 256 colors)

Mouse or other pointing devise

Windows compatible printer (Laser printer must have 4+ MB of RAM)

Connection to the Internet, minimum 56 BPS

Software

MS Windows 98, ME, NT, or 2000

Word Processing software compatible with MS Word 97 or newer

Latest version of : Netscape Navigator, Microsoft Internet Explorer, or other browser that supports HTML 4.0 or higher

Electronic mail (E-mail), MAPI compatible

Virus protection software that is regularly upgraded with all issued manufacturer's updates

1.4 RELATED INFORMATION

1.4.1 QCS User Guide

After contract award, the Contractor shall download instructions for the installation and use of QCS from the Government RMS Internet Website; the Contractor can obtain the current address from the Government. In case of justifiable difficulties, the Government will provide the Contractor with a CD-ROM containing these instructions.

1.4.2 Contractor Quality Control(CQC) Training

The use of QCS will be discussed with the Contractor's QC System Manager during the mandatory CQC Training class.

1.5 CONTRACT DATABASE

Prior to the pre-construction conference, the Government shall provide the Contractor with basic contract award data to use for QCS. The Government will provide data updates to the Contractor as needed, generally by files attached to E-mail. These updates will generally consist of submittal reviews, correspondence status, QA comments, and other administrative and QA data.

1.6 DATABASE MAINTENANCE

The Contractor shall establish, maintain, and update data for the contract in the QCS database throughout the duration of the contract. The Contractor shall establish and maintain the QCS database at the Contractor's site office. Data updates to the Government shall be submitted by E-mail with file attachments, e.g., daily reports, schedule updates, payment requests. If permitted by the Contracting Officer, a data diskette or CD-ROM may be used instead of E-mail (see Paragraph DATA SUBMISSION VIA COMPUTER DISKETTE OR CD-ROM). The QCS database typically shall include current data on the following items:

1.6.1 Administration

1.6.1.1 Contractor Information

The database shall contain the Contractor's name, address, telephone numbers, management staff, and other required items. Within 14 calendar days of receipt of QCS software from the Government, the Contractor shall deliver Contractor administrative data in electronic format via E-mail.

1.6.1.2 Subcontractor Information

The database shall contain the name, trade, address, phone numbers, and other required information for all subcontractors. A subcontractor must be listed separately for each trade to be performed. Each subcontractor/trade shall be assigned a unique Responsibility Code, provided in QCS. Within 14 calendar days of receipt of QCS software from the Government, the Contractor shall deliver subcontractor administrative data in electronic format via E-mail.

1.6.1.3 Correspondence

All Contractor correspondence to the Government shall be identified with a serial number. Correspondence initiated by the Contractor's site office shall be prefixed with "S". Letters initiated by the Contractor's home (main) office shall be prefixed with "H". Letters shall be numbered starting from 0001. (e.g., H-0001 or S-0001). The Government's letters to the Contractor will be prefixed with "C".

1.6.1.4 Equipment

The Contractor's QCS database shall contain a current list of equipment planned for use or being used on the jobsite, including the most recent and planned equipment inspection dates.

1.6.1.5 Management Reporting

QCS includes a number of reports that Contractor management can use to track the status of the project. The value of these reports is reflective of the quality of the data input, and is maintained in the various sections

of QCS. Among these reports are: Progress Payment Request worksheet, QA/QC comments, Submittal Register Status, Three-Phase Inspection checklists.

1.6.2 Finances

1.6.2.1 Pay Activity Data

The QCS database shall include a list of pay activities that the Contractor shall develop in conjunction with the construction schedule. The sum of all pay activities shall be equal to the total contract amount, including modifications. Pay activities shall be grouped by Contract Line Item Number (CLIN), and the sum of the activities shall equal the amount of each CLIN. The total of all CLINs equals the Contract Amount.

1.6.2.2 Payment Requests

All progress payment requests shall be prepared using QCS. The Contractor shall complete the payment request worksheet and include it with the payment request. The work completed under the contract, measured as percent or as specific quantities, shall be updated at least monthly. After the update, the Contractor shall generate a payment request report using QCS. The Contractor shall submit the payment requests with supporting data by E-mail with file attachment(s). If permitted by the Contracting Officer, a data diskette may be used instead of E-mail. A signed paper copy of the approved payment request is also required, which shall govern in the event of discrepancy with the electronic version.

1.6.3 Quality Control (QC)

QCS provides a means to track implementation of the 3-phase QC Control System, prepare daily reports, identify and track deficiencies, document progress of work, and support other contractor QC requirements. The Contractor shall maintain this data on a daily basis. Entered data will automatically output to the QCS generated daily report. The Contractor shall provide the Government a Contractor Quality Control (CQC) Plan within the time required in Section 01451A, CONTRACTOR QUALITY CONTROL. Within seven calendar days of Government acceptance, the Contractor shall submit a data diskette or CD-ROM reflecting the information contained in the accepted CQC Plan: schedule, pay activities, features of work, submittal register, QC requirements, and equipment list.

1.6.3.1 Daily Contractor Quality Control (CQC) Reports.

QCS includes the means to produce the Daily CQC Report. The Contractor may use other formats to record basic QC data. However, the Daily CQC Report generated by QCS shall be the Contractor's official report. Data from any supplemental reports by the Contractor shall be summarized and consolidated onto the QCS-generated Daily CQC Report. Daily CQC Reports shall be submitted as required by Section 01451A, CONTRACTOR QUALITY CONTROL. Reports shall be submitted electronically to the Government using E-mail or diskette within 24 hours after the date covered by the report. Use of either mode of submittal shall be coordinated with the Government representative. The Contractor shall also provide the Government a signed, printed copy of the daily CQC report.

1.6.3.2 Deficiency Tracking.

The Contractor shall use QCS to track deficiencies. Deficiencies identified by the Contractor will be numerically tracked using QC punch

list items. The Contractor shall maintain a current log of its QC punch list items in the QCS database. The Government will log the deficiencies it has identified using its QA punch list items. The Government's QA punch list items will be included in its export file to the Contractor. The Contractor shall regularly update the correction status of both QC and QA punch list items.

1.6.3.3 Three-Phase Control Meetings

The Contractor shall maintain scheduled and actual dates and times of preparatory and initial control meetings in QCS.

1.6.3.4 Accident/Safety Tracking.

The Government will issue safety comments, directions, or guidance whenever safety deficiencies are observed. The Government's safety comments will be included in its export file to the Contractor. The Contractor shall regularly update the correction status of the safety comments. In addition, the Contractor shall utilize QCS to advise the Government of any accidents occurring on the jobsite. This brief supplemental entry is not to be considered as a substitute for completion of mandatory reports, e.g., ENG Form 3394 and OSHA Form 200 or OSHA Form 300.

1.6.3.5 Features of Work

The Contractor shall include a complete list of the features of work in the QCS database. A feature of work may be associated with multiple pay activities. However, each pay activity (see subparagraph "Pay Activity Data" of paragraph "Finances") will only be linked to a single feature of work.

1.6.3.6 QC Requirements

The Contractor shall develop and maintain a complete list of QC testing, transferred and installed property, and user training requirements in QCS. The Contractor shall update all data on these QC requirements as work progresses, and shall promptly provide this information to the Government via QCS.

1.6.4 Submittal Management

The Government will provide the initial submittal register, ENG Form 4288, SUBMITTAL REGISTER, in electronic format. Thereafter, the Contractor shall maintain a complete list of all submittals, including completion of all data columns. Dates on which submittals are received and returned by the Government will be included in its export file to the Contractor. The Contractor shall use QCS to track and transmit all submittals. ENG Form 4025, submittal transmittal form, and the submittal register update, ENG Form 4288, shall be produced using QCS. RMS will be used to update, store and exchange submittal registers and transmittals, but will not be used for storage of actual submittals.

1.6.5 Schedule

The Contractor shall develop a construction schedule consisting of pay activities, in accordance with Contract Clause "Schedules for Construction Contracts", or Section 01320A, PROJECT SCHEDULE, as applicable. This schedule shall be input and maintained in the QCS database either manually or by using the Standard Data Exchange Format (SDEF) (see Section 01320A

PROJECT SCHEDULE). The updated schedule data shall be included with each pay request submitted by the Contractor.

1.6.6 Import/Export of Data

QCS includes the ability to export Contractor data to the Government and to import submittal register and other Government-provided data, and schedule data using SDEF.

1.7 IMPLEMENTATION

Contractor use of QCS as described in the preceding paragraphs is mandatory. The Contractor shall ensure that sufficient resources are available to maintain its QCS database, and to provide the Government with regular database updates. QCS shall be an integral part of the Contractor's management of quality control.

1.8 DATA SUBMISSION VIA COMPUTER DISKETTE OR CD-ROM

The Government-preferred method for Contractor's submission of updates, payment requests, correspondence and other data is by E-mail with file attachment(s). For locations where this is not feasible, the Contracting Officer may permit use of computer diskettes or CD-ROM for data transfer. Data on the disks or CDs shall be exported using the QCS built-in export function. If used, diskettes and CD-ROMs will be submitted in accordance with the following:

1.8.1 File Medium

The Contractor shall submit required data on 3-1/2 inch double-sided high-density diskettes formatted to hold 1.44 MB of data, capable of running under Microsoft Windows 95 or newer. Alternatively, CD-ROMs may be used. They shall conform to industry standards used in the United States. All data shall be provided in English.

1.8.2 Disk or CD-ROM Labels

The Contractor shall affix a permanent exterior label to each diskette and CD-ROM submitted. The label shall indicate in English, the QCS file name, full contract number, contract name, project location, data date, name and telephone number of person responsible for the data.

1.8.3 File Names

The Government will provide the file names to be used by the Contractor with the QCS software.

1.9 MONTHLY COORDINATION MEETING

The Contractor shall update the QCS database each workday. At least monthly, the Contractor shall generate and submit an export file to the Government with schedule update and progress payment request. As required in Contract Clause "Payments", at least one week prior to submittal, the Contractor shall meet with the Government representative to review the planned progress payment data submission for errors and omissions. The Contractor shall make all required corrections prior to Government acceptance of the export file and progress payment request. Payment requests accompanied by incomplete or incorrect data submittals will be returned. The Government will not process progress payments until an

acceptable QCS export file is received.

1.10 NOTIFICATION OF NONCOMPLIANCE

The Contracting Officer will notify the Contractor of any detected noncompliance with the requirements of this specification. The Contractor shall take immediate corrective action after receipt of such notice. Such notice, when delivered to the Contractor at the work site, shall be deemed sufficient for the purpose of notification.

-- End of Section --

SUBMITTAL REGISTER

CONTRACT NO.

TITLE AND LOCATION
Miscellaneous Airfield Repairs, Pope AFB, NC

CONTRACTOR

ACTIVITY NO	TRANSMITTAL NO	SPEC SECT	DESCRIPTION ITEM SUBMITTED	PARAG # RAPH	CLASSIFICATION	GOVT OR A/E REVWR	CONTRACTOR: SCHEDULE DATES			CONTRACTOR ACTION			APPROVING AUTHORITY					MAILED TO CONTR/ DATE RCD FRM APPR AUTH	REMARKS
							SUBMIT	APPROVAL NEEDED BY	MATERIAL NEEDED BY	ACTION CODE	DATE OF ACTION	DATE FWD TO APPR AUTH/ DATE RCD FROM CONTR	DATE FWD TO OTHER REVIEWER	DATE RCD FROM OTH REVIEWER	ACTION CODE	DATE OF ACTION			
(a)	(b)	(c)	(d)	(e)	(f)		(g)	(h)	(i)	(j)	(k)	(l)	(m)	(n)	(o)	(p)	(q)	(r)
		01356A	SD-07 Certificates																
			Mill Certificate or Affidavit	2.1.3															
		01780A	SD-02 Shop Drawings																
			As-Built Drawings	1.2.1	G														
			SD-03 Product Data																
			As-Built Record of Equipment and	1.2.2	G														
			Materials																
			Warranty Management Plan	1.3.1	G														
			Warranty Tags	1.3.5															
			Final Cleaning	1.6															
		02013	SD-01 Preconstruction Submittals																
			Environmental Protection Plan		G	RE													
			Environmental Monitoring		G	RE													
			Management Plan																
			Protection of Land Resources		G	RE													
			Protection of Surface and Ground		G	RE													
			Water																
			Protection of Air Resources		G	RE													
			SD-05 Design Data																
			Design Drawings		G	RE													
		02220	SD-03 Product Data																
			Work Plan		G	RE													
		02230	SD-03 Product Data																
			Materials Other Than Salable	3.4.2															
			Timber																
		02300	SD-03 Product Data																

SUBMITTAL REGISTER

CONTRACT NO.

TITLE AND LOCATION
Miscellaneous Airfield Repairs, Pope AFB, NC

CONTRACTOR

ACTIVITY NO	TRANSMITTAL NO	SPEC SECT	DESCRIPTION ITEM SUBMITTED	PARAGRAPH #	CLASSIFICATION	GOVT OR A/E REVWR	CONTRACTOR: SCHEDULE DATES			CONTRACTOR ACTION			APPROVING AUTHORITY					MAILED TO CONTR/ DATE RCD FRM APPR AUTH	REMARKS
							SUBMIT	APPROVAL NEEDED BY	MATERIAL NEEDED BY	ACTION CODE	DATE OF ACTION	DATE FWD TO APPR AUTH/ DATE RCD FROM CONTR	DATE FWD TO OTHER REVIEWER	DATE RCD FROM OTH REVIEWER	ACTION CODE	DATE OF ACTION		
(a)	(b)	(c)	(d)	(e)	(f)		(g)	(h)	(i)	(j)	(k)	(l)	(m)	(n)	(o)	(p)	(q)	(r)
		02300	Earthwork		G RE													
			Notification of Earthwork															
			SD-06 Test Reports															
			Testing	3.13														
			SD-07 Certificates															
			Testing	3.13	G RE													
		02315	SD-05 Design Data															
			Testing		G RE													
			SD-06 Test Reports															
			Field Density Tests															
			Testing of Fill and Backfill															
			Materials															
			Inspection, Equipment and															
			Corrective Action Reports															
			SD-07 Certificates															
			Certificates of Compliance															
		02316	SD-04 Samples															
			Tracer Wire															
			GA RE															
			SD-06 Test Reports															
			Field Density Tests	3.4.3														
			Testing of Fill and Backfill															
			Materials															
			SD-07 Certificates															
			Testing		G RE													
		02390a	SD-02 Shop Drawings															

SUBMITTAL REGISTER

CONTRACT NO.

TITLE AND LOCATION
Miscellaneous Airfield Repairs, Pope AFB, NC

CONTRACTOR

ACTIVITY NO	TRANSMITTAL NO	SPEC SECT	DESCRIPTION ITEM SUBMITTED	PARAGRAPH #	CLASSIFICATION	GOVT OR A/E REVWR	CONTRACTOR: SCHEDULE DATES			CONTRACTOR ACTION			APPROVING AUTHORITY					
							SUBMIT	APPROVAL NEEDED BY	MATERIAL NEEDED BY	ACTION CODE	DATE OF ACTION	DATE FWD TO APPR AUTH/ DATE RCD FROM CONTR	DATE FWD TO OTHER REVIEWER	DATE RCD FROM OTH REVIEWER	ACTION CODE	DATE OF ACTION	MAILED TO CONTR/ DATE RCD FRM APPR AUTH	REMARKS
(a)	(b)	(c)	(d)	(e)	(f)		(g)	(h)	(i)	(j)	(k)	(l)	(m)	(n)	(o)	(p)	(q)	(r)
		02390a	As-Built Drawings															
			SD-07 Certificates															
			Grounding Rods	2.3														
			Copper Conductors															
		02510A	SD-03 Product Data															
			Installation	3.1														
			Waste Water Disposal Method															
			Satisfactory Installation															
			SD-06 Test Reports															
			Bacteriological Disinfection															
			SD-07 Certificates															
			Manufacturer's Representative	1.4														
		02620a	SD-04 Samples															
			Filter Fabric	2.2														
			Pipe for Subdrains	2.1														
			SD-07 Certificates															
			Filter Fabric	2.2														
			Pipe for Subdrains	2.1														
		02630a	SD-03 Product Data															
			Placing Pipe	3.3														
			SD-04 Samples															
			Pipe for Culverts and Storm	2.1														
			Drains															
			SD-07 Certificates															
			Pipeline Testing															
			Determination of Density	3.7.5														

SUBMITTAL REGISTER

CONTRACT NO.

TITLE AND LOCATION
Miscellaneous Airfield Repairs, Pope AFB, NC

CONTRACTOR

ACTIVITY NO	TRANSMITTAL NO	SPEC SECT	DESCRIPTION ITEM SUBMITTED	PARAG # RAPH	CLASSIFICATION	GOVT OR A/E REVWR	CONTRACTOR: SCHEDULE DATES			CONTRACTOR ACTION			APPROVING AUTHORITY					
							SUBMIT	APPROVAL NEEDED BY	MATERIAL NEEDED BY	ACTION CODE	DATE OF ACTION	DATE FWD TO APPR AUTH/ DATE RCD FROM CONTR	DATE FWD TO OTHER REVIEWER	DATE RCD FROM OTH REVIEWER	ACTION CODE	DATE OF ACTION	MAILED TO CONTR/ DATE RCD FRM APPR AUTH	REMARKS
(a)	(b)	(c)	(d)	(e)	(f)		(g)	(h)	(i)	(j)	(k)	(l)	(m)	(n)	(o)	(p)	(q)	(r)
		02630a	Frame and Cover for Gratings	2.3.7														
		02714A	SD-03 Product Data															
			Waybills and Delivery Tickets															
			SD-06 Test Reports															
			Sampling and Testing	1.8														
			Approval of Materials	1.8.6														
			Evaluation	3.2.7														
		02722a	SD-03 Product Data															
			Plant, Equipment, and Tools	1.7														
			Waybills and Delivery Tickets															
			SD-06 Test Reports															
			Sampling and testing	1.5														
			Field Density Tests	1.5.2.4														
		02748A	SD-03 Product Data															
			Waybills and Delivery Tickets															
			SD-06 Test Reports															
			Sampling and Testing	3.7														
		02749	SD-09 Manufacturer's Field															
			Reports															
			Aggregates	2.1														
			GA															
			QC Monitoring	3.10.3.10														
			FIO															
			Asphalt Cement Binder	2.2														
			GA															
			Testing Laboratory	3.6														

SUBMITTAL REGISTER

CONTRACT NO.

TITLE AND LOCATION
Miscellaneous Airfield Repairs, Pope AFB, NC

CONTRACTOR

ACTIVITY NO	TRANSMITTAL NO	SPEC SECT	DESCRIPTION ITEM SUBMITTED	PARAGRAPH #	CLASSIFICATION	GOVT OR A/E REVWR	CONTRACTOR: SCHEDULE DATES			CONTRACTOR ACTION			APPROVING AUTHORITY					MAILED TO CONTR/ DATE RCD FRM APPR AUTH	REMARKS
							SUBMIT	APPROVAL NEEDED BY	MATERIAL NEEDED BY	ACTION CODE	DATE OF ACTION	DATE FWD TO APPR AUTH/ DATE RCD FROM CONTR	DATE FWD TO OTHER REVIEWER	DATE RCD FROM OTH REVIEWER	ACTION CODE	DATE OF ACTION		
(a)	(b)	(c)	(d)	(e)	(f)		(g)	(h)	(i)	(j)	(k)	(l)	(m)	(n)	(o)	(p)	(q)	(r)
		02749	FIO															
			Asphalt Cement Binder	2.2														
			FIO															
			Aggregates	2.1														
			Mix Design	2.3														
			GA															
			Contractor Quality Control	3.10														
		02753A	SD-03 Product Data															
			Equipment	1.14														
			Proposed Techniques	1.12	G													
			Samples for Mixture Proportioning		G													
			Studies															
			Delivery, Storage, and Handling of	1.13														
			Materials															
			SD-06 Test Reports															
			Sampling and Testing	1.5.10.1	G													
		02762a	SD-03 Product Data															
			Equipment	1.5														
			Manufacturer's Instructions															
			SD-04 Samples															
			Compression Seals	2.1														
			SD-06 Test Reports															
			Test Requirements	1.4														
		02763a	SD-03 Product Data															
			Equipment	1.5														
			Composition Requirements	2.2.1														

SUBMITTAL REGISTER

CONTRACT NO.

TITLE AND LOCATION
Miscellaneous Airfield Repairs, Pope AFB, NC

CONTRACTOR

ACTIVITY NO	TRANSMITTAL NO	SPEC SECT	DESCRIPTION ITEM SUBMITTED	PARAG # RAPH	CLASSIFICATION	GOVT OR A/E REVWR	CONTRACTOR: SCHEDULE DATES			CONTRACTOR ACTION			APPROVING AUTHORITY					MAILED TO CONTR/ DATE RCD FRM APPR AUTH	REMARKS
							SUBMIT	APPROVAL NEEDED BY	MATERIAL NEEDED BY	ACTION CODE	DATE OF ACTION	DATE FWD TO APPR AUTH/ DATE RCD FROM CONTR	DATE FWD TO OTHER REVIEWER	DATE RCD FROM OTH REVIEWER	ACTION CODE	DATE OF ACTION		
(a)	(b)	(c)	(d)	(e)	(f)		(g)	(h)	(i)	(j)	(k)	(l)	(m)	(n)	(o)	(p)	(q)	(r)
		02763a	Qualifications															
			SD-06 Test Reports															
			Sampling and Testing	2.6														
			SD-07 Certificates															
			Volatile Organic Compound	2.2.3														
			(VOC)															
		16375A	SD-02 Shop Drawings															
			Electrical Distribution System	3.11.3														
			As-Built Drawings															
			SD-03 Product Data															
			Nameplates	2.2														
			Material and Equipment	2.1														
			General Installation Requirements	3.1														
			SD-06 Test Reports															
			Factory Tests															
			Field Testing	3.11														
			Operating Tests	3.11.13	G	RE												
			Cable Installation	3.2.1.4	G	RE												
			SD-07 Certificates															
			Material and Equipment	2.1														
			Cable Joints															
			Cable Installer Qualifications															
			SD-10 Operation and Maintenance															
			Data															
			Electrical Distribution System	3.11.3														
		16526A	SD-02 Shop Drawings															

SUBMITTAL REGISTER

CONTRACT NO.

TITLE AND LOCATION
Miscellaneous Airfield Repairs, Pope AFB, NC

CONTRACTOR

ACTIVITY NO	TRANSMITTAL NO	SPEC SECT	DESCRIPTION ITEM SUBMITTED	PARAGRAPH #	CLASSIFICATION	GOVT OR A/E REVWR	CONTRACTOR: SCHEDULE DATES			CONTRACTOR ACTION			APPROVING AUTHORITY					
							SUBMIT	APPROVAL NEEDED BY	MATERIAL NEEDED BY	ACTION CODE	DATE OF ACTION	DATE FWD TO APPR AUTH/ DATE RCD FROM CONTR	DATE FWD TO OTHER REVIEWER	DATE RCD FROM OTH REVIEWER	ACTION CODE	DATE OF ACTION	MAILED TO CONTR/ DATE RCD FRM APPR AUTH	REMARKS
(a)	(b)	(c)	(d)	(e)	(f)		(g)	(h)	(i)	(j)	(k)	(l)	(m)	(n)	(o)	(p)	(q)	(r)
		16526A	Lighting and Navigation Aids															
			As-Built Drawings															
			SD-03 Product Data															
			Materials and Equipment	2.1														
			Protection Plan															
			Training															
			Special Tools															
			Parts															
			Repair Requirements															
			SD-06 Test Reports															
			Field Quality Control	3.22														
			Inspection	3.22.3														
			SD-07 Certificates															
			Welding	3.7														
			Cables, General Requirements	3.2														
			Materials and Equipment	2.1														
			SD-10 Operation and Maintenance															
			Data															
			Equipment	2.1.2														

SECTION TABLE OF CONTENTS

DIVISION 01 - GENERAL REQUIREMENTS

SECTION 01330

SUBMITTAL PROCEDURES

09/00

PART 1 GENERAL

1.1 SUBMITTAL IDENTIFICATION
1.2 SUBMITTAL CLASSIFICATION
1.2.1 Government Approved
1.2.2 Information Only
1.3 APPROVED SUBMITTALS
1.4 DISAPPROVED SUBMITTALS
1.5 WITHHOLDING OF PAYMENT

PART 2 PRODUCTS (Not used)

PART 3 EXECUTION

3.1 GENERAL
3.2 SUBMITTAL REGISTER
3.3 SCHEDULING
3.4 TRANSMITTAL FORM (ENG FORM 4025)
3.5 SUBMITTAL PROCEDURE
3.5.1 Procedures
3.5.2 Deviations
3.6 CONTROL OF SUBMITTALS
3.7 GOVERNMENT APPROVED SUBMITTALS
3.8 INFORMATION ONLY SUBMITTALS
3.9 STAMPS

-- End of Section Table of Contents --

CEGS-01330/S (September 2000)

SECTION 01330

SUBMITTAL PROCEDURES
09/00

PART 1 GENERAL
1.1 SUBMITTAL IDENTIFICATION

Submittals required are identified by SD numbers and titles as follows:

SD-01 Preconstruction Submittals

SD-02 Shop Drawings

SD-03 Product Data

SD-04 Samples

SD-05 Design Data

SD-06 Test Reports

SD-07 Certificates

SD-08 Manufacturer's Instructions

SD-09 Manufacturer's Field Reports

SD-10 Operation and Maintenance Data

SD-11 Closeout Submittals

1.2 SUBMITTAL CLASSIFICATION

Submittals are classified as follows:

1.2.1 Government Approved

Government approval is required for extensions of design, critical materials, deviations, equipment whose compatibility with the entire system must be checked, and other items as designated by the Contracting Officer. Within the terms of the Contract Clause entitled "Specifications and Drawings for Construction," they are considered to be "shop drawings."

1.2.2 Information Only

All submittals not requiring Government approval will be for information only. They are not considered to be "shop drawings" within the terms of the Contract Clause referred to above.

1.3 APPROVED SUBMITTALS

The Contracting Officer's approval of submittals shall not be construed as a complete check, but will indicate only that the general method of

construction, materials, detailing and other information are satisfactory. Approval will not relieve the Contractor of the responsibility for any error which may exist, as the Contractor under the Contractor Quality Control (CQC) requirements of this contract is responsible for dimensions, the design of adequate connections and details, and the satisfactory construction of all work. After submittals have been approved by the Contracting Officer, no resubmittal for the purpose of substituting materials or equipment will be considered unless accompanied by an explanation of why a substitution is necessary.

1.4 DISAPPROVED SUBMITTALS

The Contractor shall make all corrections required by the Contracting Officer and promptly furnish a corrected submittal in the form and number of copies specified for the initial submittal. If the Contractor considers any correction indicated on the submittals to constitute a change to the contract, a notice in accordance with the Contract Clause "Changes" shall be given promptly to the Contracting Officer.

1.5 WITHHOLDING OF PAYMENT

Payment for materials incorporated in the work will not be made if required approvals have not been obtained.

PART 2 PRODUCTS (Not used)

PART 3 EXECUTION

3.1 GENERAL

The Contractor shall make submittals as required by the specifications. The Contracting Officer may request submittals in addition to those specified when deemed necessary to adequately describe the work covered in the respective sections. Units of weights and measures used on all submittals shall be the same as those used in the contract drawings. Each submittal shall be complete and in sufficient detail to allow ready determination of compliance with contract requirements. Prior to submittal, all items shall be checked and approved by the Contractor's Quality Control (CQC) System Manager and each item shall be stamped, signed, and dated by the CQC System Manager indicating action taken. Proposed deviations from the contract requirements shall be clearly identified. Submittals shall include items such as: Contractor's, manufacturer's, or fabricator's drawings; descriptive literature including (but not limited to) catalog cuts, diagrams, operating charts or curves; test reports; test cylinders; samples; O&M manuals (including parts list); certifications; warranties; and other such required submittals. Submittals requiring Government approval shall be scheduled and made prior to the acquisition of the material or equipment covered thereby. Samples remaining upon completion of the work shall be picked up and disposed of in accordance with manufacturer's Material Safety Data Sheets (MSDS) and in compliance with existing laws and regulations.

3.2 SUBMITTAL REGISTER

At the end of this section is a submittal register showing items of equipment and materials for which submittals are required by the specifications; this list may not be all inclusive and additional submittals may be required. The Contractor shall maintain a submittal register for the project in accordance with Section 01312A QUALITY CONTROL

SYSTEM (QCS).

3.3 SCHEDULING

Submittals covering component items forming a system or items that are interrelated shall be scheduled to be coordinated and submitted concurrently. Certifications to be submitted with the pertinent drawings shall be so scheduled. Adequate time (a minimum of 30 calendar days exclusive of mailing time) shall be allowed and shown on the register for review and approval. No delay damages or time extensions will be allowed for time lost in late submittals. An additional 10 calendar days shall be allowed and shown on the register for review and approval of submittals for food service equipment and refrigeration and HVAC control systems.

3.4 TRANSMITTAL FORM (ENG FORM 4025)

The sample transmittal form (ENG Form 4025) included in Attachment 1 to Section 00800 shall be used for submitting both Government approved and information only submittals in accordance with the instructions on the reverse side of the form. These forms will be furnished to the Contractor. This form shall be properly completed by filling out all the heading blank spaces and identifying each item submitted. Special care shall be exercised to ensure proper listing of the specification paragraph and/or sheet number of the contract drawings pertinent to the data submitted for each item.

3.5 SUBMITTAL PROCEDURE

Submittals shall be made as follows:

3.5.1 Procedures

The Contractor shall be responsible for the scheduling and control of all submittals. The Contractor is responsible for confirming that the submittal register includes all submittals required by the contract documents.

In addition to those items listed on ENG Form 4288, the Contractor will furnish submittals for any deviation from the plans or specifications. The scheduled need dates must be recorded on the document for each item for control purposes and critical items must be tied to the Contractor's approved schedule where applicable.

The Contractor will submit to the Contracting Officer for approval a minimum of five copies of all G/RE (Resident/Area Office Review), G/ED (Engineering Division Review) or G/AE (Architect-Engineer Review) level submittals. Three copies of all FIO level submittals will be provided. The number of copies of submittals specified in this portion of the contract shall be complied with in lieu of four copies as specified by FAR 52.236-21.

For those contracts requiring Network Analysis System (NAS), the Contractor will schedule on the NAS critical items of equipment submittals and procurement activities which will, or have the potential to, significantly impact project completion. The inclusion or exclusion of critical items shall be subject to the approval of the Contracting Officer.

Where ENG Form 4025 must be submitted prior to approval of the Construction Progress Schedule, the Contractor shall submit an initial annotated ENG

Form 4288 upon which dates for submittal, approval and delivery of procurement items shall be included for the first 60 days of the work. Upon approval of the Construction Progress Schedule, or no later than 60 days after Notice to Proceed, the Contractor shall submit final annotated copies of ENG Form 4288. Dates shall be coordinated with the approved Construction Progress Schedule to logically interface with the sequence of construction. Critical item numbers will be shown on the listing if NAS is required.

Furnishing the schedule shall not be interpreted as relieving the Contractor of his obligation to comply with all the specification requirements for the items on the schedule. Contractor's Quality Control representative shall review the listing at least every 30 days and take appropriate action to maintain an effective system. The Contractor shall furnish a list each 30 days of all submittals on which either Government's or Contractor's action is past due. He shall also furnish revised due dates in those cases when the original submittal schedule is no longer realistic. This monthly list of delayed items shall also be annotated by the Contractor to show what corrective action he is taking with regard to slippages in submittal schedule which are attributable to actions by him, his subcontractors, or suppliers.

The Contractor shall provide a complete updated submittal register indicating the current status of all submittals when requested by the Contracting Officer in order to assure himself the schedule is being maintained.

The Contractor shall certify that each submittal is correct and in strict conformance with the contract drawings and specifications. All submittals not subject to the approval of the Contracting Officer will be submitted for information purposes only.

No Corps of Engineers action will be required prior to incorporating these items into the work, but the submittal shall be furnished to the Area/Resident Engineer not less than 2 weeks prior to procurement of Contractor certified material, equipment, etc.

These Contractor approved submittals will be used to verify that material received and used in the job is the same as that described and approved and will be used as record copies. All samples of materials submitted as required by these specifications shall be properly identified and labeled for ready identification, and upon being certified by the Contractor and reviewed by the Contracting Officer, shall be stored at the site of the work for job site use until all work has been completed and accepted by the Contracting Officer. Delegation of this approval authority to Contractor Quality Control does not relieve the Contractor from the obligation to conform to any contract requirement and will not prevent the Contracting Officer from requiring removal and replacement of construction not in contract conformance; nor does it relieve the Contractor from the requirement to furnish "samples" for testing by the Government Laboratory or check testing by the Government in those instances where the technical specifications so prescribe.

Contractor certified drawings will be subject to quality assurance review by the Government at any time during the duration of the contract. No adjustment for time or money will be allowed for corrections required as a result of noncompliance with plans and specifications.

Submittals Requiring Government Approval (G/ED Level, G/RE Level or G/AE

level). Where the review authority is designated to the Government, the Contractor is required to sign the certification on ENG Form 4025 in the box beside the remarks block in Section I. The Government will code the items in block h and sign the approval action block in Section II as the approving authority.

Operating and Maintenance Instructions. Six complete sets of instructions containing the manufacturer's operating and maintenance instructions for each piece of equipment shall be furnished. Each set shall be permanently bound and shall have a hard cover. One complete set shall be furnished at the time test procedures are submitted. Remaining sets shall be furnished before the contract is completed. The following identification shall be inscribed on the covers: The words "OPERATING AND MAINTENANCE INSTRUCTIONS," name and location of the facility, name of the Contractor, and contract number. Fly sheets shall be placed before instructions covering each subject. Instruction sheets shall be approximately 8-1/2 by 11 inches, with large sheets of drawings folded in. Instructions shall include but are not limited to:

(1) System layout showing piping, valves and controls;

(2) Approved wiring and control diagrams;

(3) A control sequence describing startup, operation and shutdown;

(4) Operating and maintenance instructions for each piece of equipment, including lubrication instructions and troubleshooting guide; and

(5) Manufacturer's bulletins, cuts and descriptive data; parts lists and recommended parts.

3.5.2 Deviations

For submittals which include proposed deviations requested by the Contractor, the column "variation" of ENG Form 4025 shall be checked. The Contractor shall set forth in writing the reason for any deviations and annotate such deviations on the submittal. The Government reserves the right to rescind inadvertent approval of submittals containing unnoted deviations.

3.6 CONTROL OF SUBMITTALS

The Contractor shall carefully control his procurement operations to ensure that each individual submittal is made on or before the Contractor scheduled submittal date shown on the approved "Submittal Register."

3.7 GOVERNMENT APPROVED SUBMITTALS

Upon completion of review of submittals requiring Government approval, the submittals will be identified as having received approval by being so stamped and dated. Four copies of the submittal will be retained by the Contracting Officer and one copy of the submittal will be returned to the Contractor.

3.8 INFORMATION ONLY SUBMITTALS

Normally submittals for information only will not be returned. Approval of the Contracting Officer is not required on information only submittals. The Government reserves the right to require the Contractor to resubmit any

item found not to comply with the contract. This does not relieve the Contractor from the obligation to furnish material conforming to the plans and specifications; will not prevent the Contracting Officer from requiring removal and replacement of nonconforming material incorporated in the work; and does not relieve the Contractor of the requirement to furnish samples for testing by the Government laboratory or for check testing by the Government in those instances where the technical specifications so prescribe.

3.9 STAMPS

Stamps used by the Contractor on the submittal data to certify that the submittal meets contract requirements shall be similar to the following:

CONTRACTOR

(Firm Name)

_____ Approved

_____ Approved with corrections as noted on submittal data and/or attached sheets(s).

SIGNATURE: _____

TITLE: _____

DATE: _____

-- End of Section --

SECTION TABLE OF CONTENTS

DIVISION 01 - GENERAL REQUIREMENTS

SECTION 01356A

STORM WATER POLLUTION PREVENTION MEASURES

08/96

PART 1 GENERAL

1.1 REFERENCES
1.2 GENERAL
1.3 SUBMITTALS
1.4 EROSION AND SEDIMENT CONTROLS
1.4.1 Stabilization Practices
1.4.1.1 Unsuitable Conditions
1.4.1.2 No Activity for Less Than 21 Days
1.4.2 Structural Practices
1.4.2.1 Silt Fences
1.4.2.2 Straw Bales

PART 2 PRODUCTS

2.1 COMPONENTS FOR SILT FENCES
2.1.1 Filter Fabric
2.1.2 Silt Fence Stakes and Posts
2.1.3 Mill Certificate or Affidavit
2.1.4 Identification Storage and Handling
2.2 COMPONENTS FOR STRAW BALES

PART 3 EXECUTION

3.1 INSTALLATION OF SILT FENCES
3.2 INSTALLATION OF STRAW BALES
3.3 MAINTENANCE
3.3.1 Silt Fence Maintenance
3.3.2 Straw Bale Maintenance
3.3.3 Diversion Dike Maintenance
3.4 INSPECTIONS
3.4.1 General
3.4.2 Inspections Details
3.4.3 Inspection Reports

-- End of Section Table of Contents --

UFGS-01356A (August 1996)

SECTION 01356A

STORM WATER POLLUTION PREVENTION MEASURES
08/96

PART 1 GENERAL

1.1 REFERENCES

The publications listed below form a part of this specification to the extent referenced. The publications are referred to in the text by basic designation only.

AMERICAN SOCIETY FOR TESTING AND MATERIALS (ASTM)

ASTM D 4439	(1997) Standard Terminology for Geosynthetics
ASTM D 4491	(1996) Water Permeability of Geotextiles by Permittivity
ASTM D 4533	(1991; R 1996) Trapezoid Tearing Strength of Geotextiles
ASTM D 4632	(1991; R 1996)) Grab Breaking Load and Elongation of Geotextiles
ASTM D 4751	(1995) Determining Apparent Opening Size of a Geotextile
ASTM D 4873	(1995) Identification, Storage, and Handling of Geosynthetic Rolls

1.2 GENERAL

The Contractor shall implement the storm water pollution prevention measures specified in this section in a manner which will meet the requirements of Section 01355A ENVIRONMENTAL PROTECTION, and the requirements of the National Pollution Discharge Elimination System (NPDES) permit attached to that section.

1.3 SUBMITTALS

Government approval is required for submittals with a "G" designation; submittals not having a "G" designation are for information only. When used, a designation following the "G" designation identifies the office that will review the submittal for the Government. The following shall be submitted in accordance with Section 01330 SUBMITTAL PROCEDURES:

SD-07 Certificates

Mill Certificate or Affidavit

Certificate attesting that the Contractor has met all specified requirements.

1.4 EROSION AND SEDIMENT CONTROLS

The controls and measures required by the Contractor are described below.

1.4.1 Stabilization Practices

The stabilization practices to be implemented shall include temporary seeding, mulching, geotextiles, erosion control matts, protection of trees, etc. On his daily CQC Report, the Contractor shall record the dates when the major grading activities occur, (e.g., clearing and grubbing, excavation, and grading); when construction activities temporarily or permanently cease on a portion of the site; and when stabilization practices are initiated. Except as provided in paragraphs Unsuitable Conditions and No Activity for Less than 21 Days, stabilization practices shall be initiated as soon as practicable, but no more than 14 days, in any portion of the site where construction activities have temporarily or permanently ceased.

1.4.1.1 Unsuitable Conditions

Where the initiation of stabilization measures by the fourteenth day after construction activity temporarily or permanently ceases is precluded by unsuitable conditions caused by the weather, stabilization practices shall be initiated as soon as practicable after conditions become suitable.

1.4.1.2 No Activity for Less Than 21 Days

Where construction activity will resume on a portion of the site within 21 days from when activities ceased (e.g., the total time period that construction activity is temporarily ceased is less than 21 days), then stabilization practices do not have to be initiated on that portion of the site by the fourteenth day after construction activity temporarily ceased.

1.4.2 Structural Practices

Structural practices shall be implemented to divert flows from exposed soils, temporarily store flows, or otherwise limit runoff and the discharge of pollutants from exposed areas of the site. Structural practices shall be implemented in a timely manner during the construction process to minimize erosion and sediment runoff. Structural practices shall include the following devices: Location and details of installation and construction are shown on the drawings.

1.4.2.1 Silt Fences

The Contractor shall provide silt fences as a temporary structural practice to minimize erosion and sediment runoff. Silt fences shall be properly installed to effectively retain sediment immediately after completing each phase of work where erosion would occur in the form of sheet and rill erosion (e.g. clearing and grubbing, excavation, embankment, and grading). Silt fences shall be installed in the locations indicated on the drawings. Final removal of silt fence barriers shall be upon approval by the Contracting Officer.

1.4.2.2 Straw Bales

The Contractor shall provide bales of straw as a temporary structural practice to minimize erosion and sediment runoff. Bales shall be properly placed to effectively retain sediment immediately after completing each

phase of work (e.g., clearing and grubbing, excavation, embankment, and grading) in each independent runoff area (e.g., after clearing and grubbing in a area between a ridge and drain, bales shall be placed as work progresses, bales shall be removed/replaced/relocated as needed for work to progress in the drainage area). Areas where straw bales are to be used are shown on the drawings. Final removal of straw bale barriers shall be upon approval by the Contracting Officer. Rows of bales of straw shall be provided as follows:

a. Along the downhill perimeter edge of all areas disturbed.

b. Along the top of the slope or top bank of drainage ditches, channels, swales, etc. that traverse disturbed areas.

c. Along the toe of all cut slopes and fill slopes of the construction areas.

d. Perpendicular to the flow in the bottom of existing drainage ditches, channels, swales, etc. that traverse disturbed areas or carry runoff from disturbed areas. Rows shall be spaced as shown on the drawings.

e. Perpendicular to the flow in the bottom of new drainage ditches, channels, and swales. Rows shall be spaced as shown on the drawings.

f. At the entrance to culverts that receive runoff from disturbed areas.

PART 2 PRODUCTS

2.1 COMPONENTS FOR SILT FENCES

2.1.1 Filter Fabric

The geotextile shall comply with the requirements of ASTM D 4439, and shall consist of polymeric filaments which are formed into a stable network such that filaments retain their relative positions. The filament shall consist of a long-chain synthetic polymer composed of at least 85 percent by weight of ester, propylene, or amide, and shall contain stabilizers and/or inhibitors added to the base plastic to make the filaments resistance to deterioration due to ultraviolet and heat exposure. Synthetic filter fabric shall contain ultraviolet ray inhibitors and stabilizers to provide a minimum of six months of expected usable construction life at a temperature range of 0 to 120 degrees F. The filter fabric shall meet the following requirements:

FILTER FABRIC FOR SILT SCREEN FENCE

PHYSICAL PROPERTY	TEST PROCEDURE	STRENGTH REQUIREMENT
Grab Tensile	ASTM D 4632	100 lbs. min.
Elongation (%)		30 % max.
Trapezoid Tear	ASTM D 4533	55 lbs. min.
Permittivity	ASTM D 4491	0.2 sec-1
AOS (U.S. Std Sieve)	ASTM D 4751	20-100

2.1.2 Silt Fence Stakes and Posts

The Contractor may use either wooden stakes or steel posts for fence construction. Wooden stakes utilized for silt fence construction, shall have a minimum cross section of 2 inches by 2 inches when oak is used and 4 inches by 4 inches when pine is used, and shall have a minimum length of 5 feet. Steel posts (standard "U" or "T" section) utilized for silt fence construction, shall have a minimum weight of 1.33 pounds per linear foot and a minimum length of 5 feet.

2.1.3 Mill Certificate or Affidavit

A mill certificate or affidavit shall be provided attesting that the fabric and factory seams meet chemical, physical, and manufacturing requirements specified above. The mill certificate or affidavit shall specify the actual Minimum Average Roll Values and shall identify the fabric supplied by roll identification numbers. The Contractor shall submit a mill certificate or affidavit signed by a legally authorized official from the company manufacturing the filter fabric.

2.1.4 Identification Storage and Handling

Filter fabric shall be identified, stored and handled in accordance with ASTM D 4873.

2.2 COMPONENTS FOR STRAW BALES

The straw in the bales shall be stalks from oats, wheat, rye, barley, rice, or from grasses such as byhalia, bermuda, etc., furnished in air dry condition. The bales shall have a standard cross section of 14 inches by 18 inches. All bales shall be either wire-bound or string-tied. The Contractor may use either wooden stakes or steel posts to secure the straw bales to the ground. Wooden stakes utilized for this purpose, shall have a minimum dimensions of 2 inches x 2 inches in cross section and shall have a minimum length of 3 feet. Steel posts (standard "U" or "T" section) utilized for securing straw bales, shall have a minimum weight of 1.33 pounds per linear foot and a minimum length of 3 feet.

PART 3 EXECUTION

3.1 INSTALLATION OF SILT FENCES

Silt fences shall extend a minimum of 16 inches above the ground surface and shall not exceed 34 inches above the ground surface. Filter fabric shall be from a continuous roll cut to the length of the barrier to avoid the use of joints. When joints are unavoidable, filter fabric shall be spliced together at a support post, with a minimum 6 inch overlap, and securely sealed. A trench shall be excavated approximately 4 inches wide and 4 inches deep on the upslope side of the location of the silt fence. The 4-inch by 4-inch trench shall be backfilled and the soil compacted over the filter fabric. Silt fences shall be removed upon approval by the Contracting Officer.

3.2 INSTALLATION OF STRAW BALES

Straw bales shall be placed in a single row, lengthwise on the contour, with ends of adjacent bales tightly abutting one another. Straw bales shall be installed so that bindings are oriented around the sides rather than along the tops and bottoms of the bales in order to prevent

deterioration of the bindings. The barrier shall be entrenched and backfilled. A trench shall be excavated the width of a bale and the length of the proposed barrier to a minimum depth of 4 inches. After the bales are staked and chinked (gaps filled by wedging with straw), the excavated soil shall be backfilled against the barrier. Backfill soil shall conform to the ground level on the downhill side and shall be built up to 4 inches against the uphill side of the barrier. Loose straw shall be scattered over the area immediately uphill from a straw bale barrier to increase barrier efficiency. Each bale shall be securely anchored by at least two stakes driven through the bale. The first stake or steel post in each bale shall be driven toward the previously laid bale to force the bales together. Stakes or steel pickets shall be driven a minimum 18 inches deep into the ground to securely anchor the bales.

3.3 MAINTENANCE

The Contractor shall maintain the temporary and permanent vegetation, erosion and sediment control measures, and other protective measures in good and effective operating condition by performing routine inspections to determine condition and effectiveness, by restoration of destroyed vegetative cover, and by repair of erosion and sediment control measures and other protective measures. The following procedures shall be followed to maintain the protective measures.

3.3.1 Silt Fence Maintenance

Silt fences shall be inspected in accordance with paragraph INSPECTIONS. Any required repairs shall be made promptly. Close attention shall be paid to the repair of damaged silt fence resulting from end runs and undercutting. Should the fabric on a silt fence decompose or become ineffective, and the barrier is still necessary, the fabric shall be replaced promptly. Sediment deposits shall be removed when deposits reach one-third of the height of the barrier. When a silt fence is no longer required, it shall be removed. The immediate area occupied by the fence and any sediment deposits shall be shaped to an acceptable grade. The areas disturbed by this shaping shall receive erosion control if required.

3.3.2 Straw Bale Maintenance

Straw bale barriers shall be inspected in accordance with paragraph INSPECTIONS. Close attention shall be paid to the repair of damaged bales, end runs and undercutting beneath bales. Necessary repairs to barriers or replacement of bales shall be accomplished promptly. Sediment deposits shall be removed when deposits reach one-half of the height of the barrier. Bale rows used to retain sediment shall be turned uphill at each end of each row. When a straw bale barrier is no longer required, it shall be removed. The immediate area occupied by the bales and any sediment deposits shall be shaped to an acceptable grade. The areas disturbed by this shaping shall be seeded in accordance with Section 02936 TURF - GRASS SEEDING.

3.3.3 Diversion Dike Maintenance

Diversion dikes shall be inspected in accordance with paragraph INSPECTIONS. Close attention shall be paid to the repair of damaged diversion dikes and necessary repairs shall be accomplished promptly. When diversion dikes are no longer required, they shall be shaped to an acceptable grade. The areas disturbed by this shaping shall be seeded in accordance with Section 02936 TURF - GRASS SEEDING.

3.4 INSPECTIONS

3.4.1 General

The Contractor shall inspect disturbed areas of the construction site, areas used for storage of materials that are exposed to precipitation that have not been finally stabilized, stabilization practices, structural practices, other controls, and area where vehicles exit the site at least once every seven (7) calendar days and within 24 hours of the end of any storm that produces 0.5 inch or more rainfall at the site. Where sites have been finally stabilized, such inspection shall be conducted at least once every month.

3.4.2 Inspections Details

Disturbed areas shall be inspected for evidence of, or the potential for, pollutants entering the drainage system. Erosion and sediment control measures identified in the Storm Water Pollution Prevention Plan shall be observed to ensure that they are operating correctly. Discharge locations or points shall be inspected to ascertain whether erosion control measures are effective in preventing significant impacts to receiving waters. Locations where vehicles exit the site shall be inspected for evidence of offsite sediment tracking.

3.4.3 Inspection Reports

For each inspection conducted, the Contractor shall prepare a report summarizing the scope of the inspection, name(s) and qualifications of personnel making the inspection, the date(s) of the inspection, major observations relating to the implementation of the Storm Water Pollution Prevention Plan, maintenance performed, and actions taken. The report shall be furnished to the Contracting Officer within 24 hours of the inspection as a part of the Contractor's daily CQC REPORT. A copy of the inspection report shall be maintained on the job site.

-- End of Section --

SECTION TABLE OF CONTENTS

DIVISION 01 - GENERAL REQUIREMENTS

SECTION 01420

SOURCES FOR REFERENCE PUBLICATIONS

08/02

PART 1 GENERAL

1.1 REFERENCES
1.2 ORDERING INFORMATION

-- End of Section Table of Contents --

SECTION 01420

SOURCES FOR REFERENCE PUBLICATIONS
08/02

PART 1 GENERAL

1.1 REFERENCES

Various publications are referenced in other sections of the specifications to establish requirements for the work. These references are identified in each section by document number, date and title. The document number used in the citation is the number assigned by the standards producing organization, (e.g. ASTM B 564 Nickel Alloy Forgings). However, when the standards producing organization has not assigned a number to a document, an identifying number has been assigned for reference purposes.

1.2 ORDERING INFORMATION

The addresses of the standards publishing organizations whose documents are referenced in other sections of these specifications are listed below, and if the source of the publications is different from the address of the sponsoring organization, that information is also provided. Documents listed in the specifications with numbers which were not assigned by the standards producing organization should be ordered from the source by title rather than by number.

ACI INTERNATIONAL (ACI)
P.O. Box 9094
Farmington Hills, MI 48333-9094
Ph: 248-848-3700
Fax: 248-848-3701
Internet: http://www.aci-int.org

AIR CONDITIONING AND REFRIGERATION INSTITUTE (ARI)
4301 North Fairfax Dr., Suite 425
ATTN: Pubs Dept.
Arlington, VA 22203
Ph: 703-524-8800
Fax: 703-528-3816
E-mail: ari@ari.org
Internet: http://www.ari.org

AIR CONDITIONING CONTRACTORS OF AMERICA (ACCA)
2800 Shirlington Road, Suite 300
Arlington, VA 22206
Ph: 703-575-4477
FAX: 703-575-4449
Internet: http://www.acca.org

AIR DIFFUSION COUNCIL (ADC)
1000 East Woodfield Road, Suite 102
Shaumburg, IL 60173-5921
Ph: 847-706-6750
Fax: 847-706-6751
Internet: http://www.flexibleduct.org

AIR MOVEMENT AND CONTROL ASSOCIATION (AMCA)
30 W. University Dr.
Arlington Heights, IL 60004-1893
Ph: 847-394-0150
Fax: 847-253-0088
Internet: http://www.amca.org

ALUMINUM ASSOCIATION (AA)

900 19th Street N.W.
Washington, DC 20006
Ph: 202-862-5100
Fax: 202-862-5164
Internet: http://www.aluminum.org

AMERICAN ARCHITECTURAL MANUFACTURERS ASSOCIATION (AAMA)
1827 Walden Ofc. Sq.
Suite 104
Schaumburg, IL 60173-4268
Ph: 847-303-5664
Fax: 847-303-5774
Internet: http://www.aamanet.org

AMERICAN ASSOCIATION OF STATE HIGHWAY AND TRANSPORTATION OFFICIALS (AASHTO)
444 N. Capital St., NW, Suite 249
Washington, DC 20001
Ph: 800-231-3475 202-624-5800
Fax: 800-525-5562 202-624-5806
Internet: http://www.aashto.org

AMERICAN ASSOCIATION OF TEXTILE CHEMISTS AND COLORISTS (AATCC)
P.O. Box 12215
Research Triangle Park, NC 27709-2215
Ph: 919-549-8141
Fax: 919-549-8933
Internet: http://www.aatcc.org

AMERICAN BEARING MANUFACTURERS ASSOCIATION (ABMA)
2025 M Street, NW, Suite 800
Washington, DC 20036
Ph: 202-367-1155
Fax: 202-367-2155
Internet: http://www.abma-dc.org

AMERICAN BOILER MANUFACTURERS ASSOCIATION (ABMA)
4001 North 9th Street, Suite 226
Arlington, VA 22203-1900
Ph: 703-522-7350
Fax: 703-522-2665
Internet: http://www.abma.com

AMERICAN CONCRETE PIPE ASSOCIATION (ACPA)
222 West Las Colinas Blvd., Suite 641
Irving, TX 75039-5423
Ph: 972-506-7216 or 800-290-2272
Fax: 972-506-7682
Internet: http://www.concrete-pipe.org

e-mail: info@concrete-pipe.org

AMERICAN CONFERENCE OF GOVERNMENTAL INDUSTRIAL HYGIENISTS (ACGIH)
1330 Kemper Meadow Dr.
Suite 600
Cincinnati, OH 45240
Ph: 513-742-2020
Fax: 513-742-3355
Internet: http://www.acgih.org
E-mail: pubs@acgih.org

AMERICAN FOREST & PAPER ASSOCIATION (AF&PA)
American Wood Council
ATTN: Publications Dept.
1111 Nineteenth St. NW, Suite 800
Washington, DC 20036
Ph: 800-294-2372 or 202-463-2700
Fax: 202-463-2471
Internet: http://www.afandpa.org/awc/

AMERICAN GAS ASSOCIATION (AGA)
400 N. Capitol St. N.W.Suite 450
Washington, D.C. 20001
Ph: 202-824-7000
Fax: 202-824-7115
Internet: http://www.aga.org

AMERICAN GAS ASSOCIATION LABORATORIES (AGAL)
400 N. Capitol St. N.W.Suite 450
Washington, D.C. 20001
Ph: 202-824-7000
Fax: 202-824-7115
Internet: http://www.aga.org

AMERICAN GEAR MANUFACTURERS ASSOCIATION (AGMA)
1500 King St., Suite 201
Alexandria, VA 22314-2730
Ph: 703-684-0211
Fax: 703-684-0242
Internet: http://www.agma.org

AMERICAN INSTITUTE OF STEEL CONSTRUCTION (AISC)
One East Wacker Dr., Suite 3100
Chicago, IL 60601-2001
Ph: 312-670-2400
Publications: 800-644-2400
Fax: 312-670-5403
Internet: http://www.aisc.org

AMERICAN INSTITUTE OF TIMBER CONSTRUCTION (AITC)
7012 So. Revere Parkway, Suite 140
Englewood, CO 80112
Ph: 303-792-9559
Fax: 303-792-0669
Internet: http://www.aitc-glulam.org

AMERICAN IRON AND STEEL INSTITUTE (AISI)
1101 17th St., NW Suite 1300
Washington, DC 20036

Ph: 202-452-7100
Internet: http://www.steel.org

AMERICAN NATIONAL STANDARDS INSTITUTE (ANSI)
1819 L Street, NW, 6th Floor
Washington, DC 20036
Ph: 202-293-8020
Fax: 202-293-9287
Internet: http://www.ansi.org/

Note --- Documents beginning with the letter "S" can be ordered from:

Acoustical Society of America
Standards and Publications Fulfillment Center
P. O. Box 1020
Sewickley, PA 15143-9998
Ph: 412-741-1979
Fax: 412-741-0609
Internet: http://asa.aip.org
General e-mail: asa@aip.org
Publications e-mail: asapubs@abdintl.com

AMERICAN NURSERY AND LANDSCAPE ASSOCIATION (ANLA)
1250 I St., NW, Suite 500
Washington, DC 20005-3922
Ph: 202-789-2900
FAX: 202-789-1893
Internet: http://www.anla.org

AMERICAN PETROLEUM INSTITUTE (API)
1220 L St., NW
Washington, DC 20005-4070
Ph: 202-682-8000
Fax: 202-682-8223
Internet: http://www.api.org

AMERICAN PUBLIC HEALTH ASSOCIATION (APHA)
800 I Street, NW
Washington, DC 20001
PH: 202-777-2742
FAX: 202-777-2534
Internet: http://www.apha.org

AMERICAN RAILWAY ENGINEERING & MAINTENANCE-OF-WAY ASSOCIATION (AREMA)
8201 Corporate Dr., Suite 1125
Landover, MD 20785-2230
Ph: 301-459-3200
Fax: 301-459-8077
Internet: http://www.arema.org

AMERICAN SOCIETY FOR NONDESTRUCTIVE TESTING (ASNT)
1711 Arlingate Lane
P.O. Box 28518
Columbus, OH 43228-0518
Ph: 800-222-2768
Fax: 614-274-6899
Internet: http://www.asnt.org

AMERICAN SOCIETY FOR QUALITY (ASQ)
600 North Plankinton Avenue
Milwaukee, WI 53202-3005
Ph: 800-248-1946
Fax: 414-272-1734
Internet: http://www.asq.org

ASTM INTERNATIONAL (ASTM)

100 Barr Harbor Drive
West Conshohocken, PA 19428-2959
Ph: 610-832-9585
Fax: 610-832-9555
Internet: http://www.astm.org

AMERICAN SOCIETY OF CIVIL ENGINEERS (ASCE)
1801 Alexander Bell Drive
Reston, VA 20191-4400
Ph: 703-295-6300 - 800-548-2723
Fax: 703-295-6222
Internet: http://www.asce.org
e-mail: marketing@asce.org

AMERICAN SOCIETY OF HEATING, REFRIGERATING AND AIR-CONDITIONING ENGINEERS (ASHRAE)
1791 Tullie Circle, NE
Atlanta, GA 30329
Ph: 800-527-4723 or 404-636-8400
Fax: 404-321-5478
Internet: http://www.ashrae.org

AMERICAN SOCIETY OF SANITARY ENGINEERING (ASSE)
901 Canterbury, Suite A
Westlake, OH 44145
Ph: 440-835-3040
Fax: 440-835-3488
E-mail: asse@ix.netcom.com
Internet: http://www.asse-plumbing.org

AMERICAN WATER WORKS ASSOCIATION(AWWA)
6666 West Quincy
Denver, CO 80235
Ph: 800-926-7337 - 303-794-7711
Fax: 303-794-7310
Internet: http://www.awwa.org

AMERICAN WELDING SOCIETY (AWS)
550 N.W. LeJeune Road
Miami, FL 33126
Ph: 800-443-9353 - 305-443-9353
Fax: 305-443-7559
Internet: http://www.amweld.org

AMERICAN WOOD-PRESERVERS' ASSOCIATION (AWPA)
P.O. Box 5690
Grandbury, TX 76049-0690
Ph: 817-326-6300
Fax: 817-326-6306

Internet: http://www.awpa.com

APA - THE ENGINEERED WOOD ASSOCIATION (APA)
P.O.Box 11700
Tacoma, WA 98411-0700
Ph: 253-565-6600
Fax: 253-565-7265
Internet: http://www.apawood.org

ARCHITECTURAL & TRANSPORTATION BARRIERS COMPLIANCE BOARD (ATBCB)

The Access Board
1331 F Street, NW, Suite 1000
Washington, DC 20004-1111
PH: 202-272-5434
FAX: 202-272-5447
Internet: http://www.access-board.gov

ARCHITECTURAL WOODWORK INSTITUTE (AWI)
1952 Isaac Newton Square West
Reston, VA 20190
Ph: 703-733-0600
Fax: 703-733-0584
Internet: http://www.awinet.org

ASBESTOS CEMENT PIPE PRODUCERS ASSOCIATION (ACPPA)
PMB114-1745 Jefferson Davis Highway
Arlington, VA 22202
Ph: 514-861-1153
Fax: 514-861-1152
Internet: None

ASM INTERNATIONAL (ASM)
9639 Kinsman Road
Materials Park, OH 44073-0002
Ph: 440-338-5151
Fax: 440-338-4634
Internet: http://www.asm-intl.org
Order Publications From:
ASM International
ATTN: MSC/Book Order
P.O. Box 473
Novelty, OH 44072-9901

ASME INTERNATIONAL (ASME)
Three Park Avenue
New York, NY 10016-5990
Ph: 212-591-7722
Fax: 212-591-7674
Internet: http://www.asme.org

ASPHALT INSTITUTE (AI)
Research Park Dr.
P.O. Box 14052
Lexington, KY 40512-4052
Ph: 859-288-4960
Fax: 859-288-4999
Internet: http://www.asphaltinstitute.org

ASSOCIATED AIR BALANCE COUNCIL (AABC)
1518 K St., NW, Suite 503
Washington, DC 20005
Ph: 202-737-0202
Fax: 202-638-4833
Internet: http://www.aabchq.com
E-mail: aabchq@aol.com

ASSOCIATION FOR THE ADVANCEMENT OF MEDICAL INSTRUMENTATION (AAMI)
1110 N. Glebe Rd., Suite 220
Arlington, VA 22201-5762
Ph: 1-800l-332-2264 or 703-525-4890
Fax: 703-276-0793
Internet: http://www.aami.org

ASSOCIATION OF EDISON ILLUMINATING COMPANIES (AEIC)
600 No. 18th St.
P.O. Box 2641
Birmingham, AL 35291
Ph: 205-257-2530
Fax: 205-257-2540
Internet: http://www.aeic.org

ASSOCIATION OF HOME APPLIANCE MANUFACTURERS (AHAM)
1111 19th St. NW., Suite 402
Washington, DC 20036
Ph: 202-872-5955
Fax: 202-872-9354
Internet: http://www.aham.org

BIFMA INTERNATIONAL (BIFMA)
2680 Horizon Drive SE, Suite A-1
Grand Rapids, MI 49546-7500
Ph: 616-285-3963
Fax: 616-285-3765
Internet: http://www.bifma.com
E-mail: email@bifma.com

BIOCYCLE, JOURNAL OF COMPOSTING AND RECYCLING (BIOCYCLE)
The JG Press Inc.
419 State Avenue
Emmaus PA. 18049
Ph: 610-967-4135
Internet: http://www.biocycle.net
E-mail: jgpress@jgpress.com

BRICK INDUSTRY ASSOCIATION (BIA)
11490 Commerce Park Dr., Suite 308
Reston, VA 22091-1525
Ph: 703-620-0010
Fax: 703-620-3928
Internet: http://www.brickinfo.org

BRITISH STANDARDS INSTITUTE (BSI)
389 Chiswick High Road
London W4 4AL
United Kingdom
Phone: +44 (0)20 8996 9000
Fax: +44 (0)20 8996 7400

Email: Info@bsi-global.com
Website: http://www.bsi-global.com

BUILDERS HARDWARE MANUFACTURERS ASSOCIATION (BHMA)
355 Lexington Ave.
17th floor
New York, NY 10017-6603
Ph: 212-297-2122
Fax: 212-370-9047
Internet: http://www.buildershardware.com

CARPET AND RUG INSTITUTE (CRI)
310 Holiday Ave.
Dalton, GA 30720
P.O. Box 2048
Dalton, GA 30722-2048
Ph: 1-800-882-3176 or 706-278-0232
Fax: 706-278-8835
Internet: http://www.carpet-rug.com

CAST IRON SOIL PIPE INSTITUTE (CISPI)
5959 Shallowford Rd., Suite 419
Chattanooga, TN 37421
Ph: 423-892-0137
Fax: 423-892-0817
Internet: http://www.cispi.org

CEILINGS & INTERIOR SYSTEMS CONSTRUCTION ASSOCIATION (CISCA)
1500 Lincoln Highway, Suite 202
St. Charles, IL 60174
Ph: 630-584-1919
Fax: 630-584-2003
Internet: http://www.cisca.org

CENTERS FOR DISEASE CONTROL AND PREVENTION (CDC)

1600 Clifton Road
Atlanta, GA 30333
PH: 404-639-3311
FAX:
Internet: http://www.cdc.gov

CHEMICAL FABRICS & FILM ASSOCIATION (CFFA)

1300 Sumner Ave.
Cleveland OH 44115-2851
PH: 216-241-7333
FAX: 216-241-0105
Internet: http://www.chemicalfabricsandfilm.com/
OK 4/02

CHLORINE INSTITUTE (CI)
2001 L St., NW Suite 506
Washington, DC 20036
Ph: 202-775-2790
Fax: 202-223-7225
Internet: http://www.cl2.com

COMPRESSED AIR AND GAS INSTITUTE (CAGI)

1300 Sumner Ave.
Cleveland OH 44115-2851
PH: 216-241-7333
FAX: 216-241-0105
Internet: http://www.cagi.org/

COMPRESSED GAS ASSOCIATION (CGA)
4221 Walney Road, 5th Floor
Chantilly, VA 20151-2923
Ph: 703-788-2700
Fax: 703-961-1831
Internet: http://www.cganet.com
e-mail: Customer_Service@cganet.com

CONCRETE REINFORCING STEEL INSTITUTE (CRSI)
933 N. Plum Grove Rd.
Schaumburg, IL 60173-4758
Ph: 847-517-1200
Fax: 847-517-1206
Internet: http://www.crsi.org/

CONSUMER PRODUCT SAFETY COMMISSION (CPSC)
4330 East-West Highway
Bethesda, Maryland 20814-4408
Ph: 301-504-0990
Fx: 301-504-0124 and 301-504-0025
Internet: http://www.cpsc.gov

CONVEYOR EQUIPMENT MANUFACTURERS ASSOCIATION (CEMA)
6724 Lone Oak Blvd.
Naples, Florida 34109
Ph: 941-514-3441
Fax: 941-514-3470
Internet: http://www.cemanet.org

COOLING TECHNOLOGY INSTITUTE (CTI)
2611 FM 1960 West
Suite H-200
Houston, TX 77068-3730
Ph: 281-583-4087
Fax: 281-537-1721
Internet: http://www.cti.org

COPPER DEVELOPMENT ASSOCIATION (CDA)
260 Madison Ave.
New York, NY 10016
Ph: 212-251-7200
Fax: 212-251-7234
Internet: http://www.copper.org
E-mail: staff@cda.copper.org

CRANE MANUFACTURERS ASSOCIATION OF AMERICA (CMAA)
8720 Red Oak Blvd., Ste, 201
Charlotte, NC 28217 USA
Ph: 704-676-1190 or 800-722-6832
Fx: 704-676-1199
Internet: http://www.mhia.org/psc/psc_products_cranes.cfm

DISTRICT OF COLUMBIA MUNICIPAL REGULATIONS (DCMR)

441 4th Street NW
Wacsington DC 20001
PH: 202-727-1000
Internet: http://www.abfa.com/dcdocs/dcmrlist.htm

DOOR AND ACCESS SYSTEM MANUFACTURERS ASSOCIATION (DASMA)
1300 Sumner Avenue
Cleveland, OH 44115-2851
Ph: 216-241-7333
Fax: 216-241-0105
Internet: http://www.dasma.com
e-mail: dasma@dasma.com

DOOR AND HARDWARE INSTITUTE (DHI)
14150 Newbrook Dr.Suite 200
Chantilly, VA 20151-2223
Ph: 703-222-2010
Fax: 703-222-2410
Internet: http://www.dhi.org
e-mail: techdept@dhi.org

DUCTILE IRON PIPE RESEARCH ASSOCIATION (DIPRA)
245 Riverchase Parkway East, Suite 0
Birmingham, AL 35244
Ph: 205-402-8700
Fax: 205-402-8730
Internet: http://www.dipra.org
E-mail: info@dipra.org

EIFS INDUSTRY MEMBERS ASSOCIATION (EIMA)
3000 Corporate Center Drive, Suite 270
Morrow, GA 30260
Ph: 800-294-3462
Fax: 770-968-5818
Internet: http://www.eima.com

ELECTRICAL GENERATING SYSTEMS ASSOCIATION (EGSA)
1650 South Dixie Highway, Ste. 500
Boca Raton, FL 33432
Ph: 561-750-5575
Fax: 561-395-8557
Internet: http://www.egsa.org

ELECTRONIC INDUSTRIES ALLIANCE (EIA)
2500 Wilson Blvd.
Arlington, VA 22201-3834
Ph: 703-907-7500
Fax: 703-907-7501
Internet: http://www.eia.org

ENERGY RESEARCH AND DEVELOPMENT ADMINISTRATION (ERDA)
Organization abolished by Dept of Energy Act
(91 Stat 577)4 Aug 1977
Successor Organization is Department of Energy
PH:
FAX:

Internet: http://www.mbe.doe.gov/

ENGINE MANUFACTURERS ASSOCIATION (EMA)

Two North LaSalle Street, Suite 2200
Chicago, Il 60602
PH: 312-827-8700
FAX: 312-827-8737
Internet: http://www.engine-manufacturers.org/

ETL TESTING LABORATORIES (ETL)
Intertek Testing Services, ETL SEMKO
70 Codman Hill Road
Boxborough, MA 01719
PH: 1-800-967-5352
FAX: 1-800-813-9442
Internet: http://www.etlsemko.com
E-mail: info@etlsemko.com

EUROPEAN COMMITTEE FOR ELECTROTECHNICAL STANDARDIZATION (CENELEC)
CENELEC CS Info & Publications Department
Rue de Stassartstraat 35
1050 Brussels
Phone: + 32 2 519 68 71
Fax: + 32 2 519 69 19
Internet: http://www.cenelec.org

EXPANSION JOINT MANUFACTURERS ASSOCIATION (EJMA)
25 N Broadway
Tarrytown, NY 10591
Ph: 914-332-0040
Fax: 914-332-1541
Internet: http://www.ejma.org

FM GLOBAL (FM)
1301 Atwood Avenue
P.O. Box 7500
Johnston, RI 02919
Ph: (for publications) 781-255-6681
Ph: (Toll-Free): 877-364-6726
Fax: 781-255-0181
Internet: http://www.fmglobal.com

FLUID SEALING ASSOCIATION (FSA)
994 Old Eagle School Road #1019
Wayne, PA 19087
PH: 610-971-4850
FAX: 610-9971-4859
Internet: http://www.fluidsealing.com
E-mail: info@fluidsealing.com

FORESTRY SUPPLIERS (FSUP)
205 West Rankin St.
P.O. Box 8397
Jackson, MS 39284-8397
Ph: 601-354-3565
Fax: 601-292-0165
Internet: http://www.forestry-suppliers.com

FOUNDATION FOR CROSS-CONNECTION CONTROL AND HYDRAULIC RESEARCH (FCCCHR)
University of South California
Kaprielian Hall 200
Los Angeles, CA 90089-2531
Ph: 213-740-2032
Fax: 213-740-8399
Internet: http://www.usc.edu/dept/fccchr

GEOLOGICAL SOCIETY OF AMERICA (GSA)
P.O. Box 9140
Boulder, CO 80301-9140
Ph: 800-443-4472
Fax: 303-357-1070
Internet: http://www.geosociety.org

GEOSYNTHETIC INSTITUTE (GSI)
475 Kedron Ave.
Folsom, PA 19033-1208
Ph: 610-522-8440
Fax: 610-522-8441
Internet: http://www.geosynthetic-institute.org

GLASS ASSOCIATION OF NORTH AMERICA (GANA)
2945 SW Wanamaker Drive, Suite A
Topeka, KS 66614-5321
Ph: 785-271-0208
Fax: 785-271-0166
Internet: http://www.glasswebsite.com/GANA

GYPSUM ASSOCIATION (GA)
810 First St. NE, Suite 510
Washington, DC 20002
Ph: 202-289-5440
Fax: 202-289-3707
Internet: http://www.gypsum.org

HARDWOOD PLYWOOD & VENEER ASSOCIATION (HPVA)
1825 Michael Faraday Dr.
P.O. Box 2789
Reston, VA 20195-0789
Ph: 703-435-2900
Fax: 703-435-2537
Internet: http://www.hpva.org

HEAT EXCHANGE INSTITUTE (HEI)
1300 Sumner Ave
Cleveland, OH 44115-2851
Ph: 216-241-7333
Fax: 216-241-0105
Internet: http://www.heatexchange.org
email: hei@heatexchange.org

HOIST MANUFACTURERS INSTITUTE (HMI)

8720 Red Oak Blvd., Suite 201
Charlotte, NC 28217
PH: 704-676-1190
FAX: 704-676-1199

Internet: http://www.mhia.org/psc/PSC_Products_Hoists.cfm

HOLLOW METAL MANUFACTURERS ASSOCIATION (HMMA)

NAAMM Headquarters
8 South Michigan Avenue, Suite 1000
Chicago, IL 60603
PH: 312-332-0405
FAX: 312-332-0706
Internet: http://www.naamm.org/hmma.htm

NOTE --- HMMA has merged with NAAAM.

H.P. WHITE LABORATORY (HPW)
3114 Scarboro Rd.
Street, MD 21154
Ph: 410-838-6550
fax: 410-838-2802
Internet: http://www.hpwhite.com

HYDRAULIC INSTITUTE (HI)
9 Sylvan Way, Suite 180
Parsippany, NJ 07054-3802
Ph: 888-786-7744 or 973-267-9700
Fax: 973-267-9055
Internet: http://www.pumps.org

HYDRONICS INSTITUTE DIVISION OF GAMA (HYI)
35 Russo Pl.
P.O. Box 218
Berkeley Heights, NJ 07922-0218
Ph: 908-464-8200
Fax: 908-464-7818
Internet: http://www.gamanet.org/publist/hydroordr.htm

IBM CORPORATION (IBM)
Publications
4800 Falls of the Neuse
Raleigh, NC 27609
Ph: 800-879-2755, Option 1
Fax: 800-445-9269
Internet: http://www.ibm.com/shop/publications/order

ILLUMINATING ENGINEERING SOCIETY OF NORTH AMERICA (IESNA)
120 Wall St., 17th Floor
New York, NY 10005-4001
Ph: 212-248-5000
Fax: 212-248-5017
Internet: http://www.iesna.org

INDUSTRIAL FASTENERS INSTITUTE (IFI)
1717 East 9th St., Suite 1105
Cleveland, OH 44114-2879
Ph: 216-241-1482
Fax: 216-241-5901
Internet: http://www.industrial-fasteners.org
e-mail: indfast@aol.com

INSECT SCREENING WEAVERS ASSOCIATION (ISWA)

DEFUNCT in 1997

INSTITUTE OF CLEAN AIR COMPANIES (ICAC)
1660 L St., NW, Suite 1100
Washington, DC 20036-5603
Ph: 202-457-0911
Fax: 202-331-1388
E-mail: jsmith@icac.com
Internet: http://icac.com

INSTITUTE OF ELECTRICAL AND ELECTRONICS ENGINEERS (IEEE)
445 Hoes Ln, P. O. Box 1331
Piscataway, NJ 08855-1331
Ph: 732-981-0060 OR 800-701-4333
Fax: 732-981-9667
Internet: http://www.ieee.org
E-mail: customer.services@ieee.org

INSTITUTE OF ENVIRONMENTAL SCIENCES AND TECHNOLOGY (IEST)
940 East Northwest Highway
Mount Prospect, IL 60056
Ph: 847-255-1561
Fax: 847-255-1699
Internet: http://www.iest.org

INSULATED CABLE ENGINEERS ASSOCIATION (ICEA)
P.O. Box 1568
Carrollton, GA 30117
Ph: 770-830-0369
Fax: 770-830-8501
E-mail:
Internet: http://www.icea.net

INTERNATIONAL APPROVAL SERVICES (IAS)
8501 East Pleasant Valley Rd.
Cleveland, OH 44131
Ph: 216-524-4990
Fax: 216-328-8118
Internet: http://www.csa-international.org

INTERNATIONAL ASSOCIATION OF PLUMBING AND MECHANICAL OFFICIALS (IAPMO)
20001 East Walnut Dr., So.
Walnut, CA 91789-2825
Ph: 909-595-8449
Fax: 909-594-3690
Fax for Stds: 909-594-5265
Internet: http://www.iapmo.org

INTERNATIONAL CODE COUNCIL (ICC)
5203 Leesburg Pike, Suite 600
Falls Church, VA 22041
Ph: 703-931-4533
Fax: 703-379-1546
Internet: http://www.intlcode.org

INTERNATIONAL CONCRETE REPAIR INSTITUTE (ICRI)

3166 S. River Road, Suite 132

Des Plaines, IL 60018
Phone: 847-827-0830
Fax: 847-827-0832
Internet: http://www.icri.org

INTERNATIONAL CONFERENCE OF BUILDING OFFICIALS (ICBO)
5360 Workman Mill Rd.
Whittier, CA 90601-2298
Ph: 800-284-4406
Ph: 562-699-0541
Fax: 562-692-3853
Internet: http://www.icbo.org

INTERNATIONAL ELECTRICAL TESTING ASSOCIATION (NETA)

P.O. Box 687
106 Stone Street
Morrison, Colorado 80465
PH: 303-697-8441
FAX: 303-697-8431
Internet: http://www.netaworld.org

INTERNATIONAL ELECTROTECHNICAL COMMISSION (IEC)
3, rue de Varembe, P.O. Box 131
CH-1211 Geneva 20, Switzerland
Ph: 41-22-919-0211
Fax: 41-22-919-0300
Internet: http://www.iec.ch
e-mail: info@iec.ch

INTERNATIONAL GROUND SOURCE HEAT PUMP ASSOCIATION (IGSHPA)

Oklahoma State University
490 Cordell South
Stillwater OK 74078-8018
PH: 800-626-4747
FAX: 405-744-5283
Internet: http://www.igshpa.okstate.edu/

INTERNATIONAL INSTITUTE OF AMMONIA REFRIGERATION (IIAR)
1110 N. Glebe Rd., Suite 250
Arlington, VA 22201
Ph: 703-312-4200
Fax: 703-312-0065
Internet: http://www.iiar.org
e-mail: iiar@iiar.org

INTERNATIONAL MUNICIPAL SIGNAL ASSOCIATION (IMSA)
P.O. Box 539
165 East Union St.
Newark, NY 14513-0539
Ph: 315-331-2182
Ph: 800-723-4672
Fax: 315-331-8205
Internet: http://www.imsasafety.org/

INTERNATIONAL ORGANIZATION FOR STANDARDIZATION (ISO)
1, rue de Varembe'
Case Postale 56

CH-1211 Geneve 20 Switzerland
Ph: 41-22-749-0111
Fax: 41-22-733-3430
Internet: http://www.iso.ch
e-mail: central@iso.ch

INTERNATIONAL SLURRY SURFACING ASSOCIATION (ISSA)
3 Church Circle, PMB 250
Annapolis, MD 21401
Ph: 410-267-0023
Fax: 410-267-7546
Internet: http://www.slurry.org
e-mail: krissoff@slurry.org

INTERNATIONAL TELECOMMUNICATION UNION (ITU)
Order from:
U.S. Dept of Commerce
National Technical Information Service
5285 Port Royal Road.
Springfield, VA 22161
Ph: 703-605-6040
FAX: 703-605-6887
Internet: http://www.ntis.gov

For documents not avail from Dept of Commerce:
Sales Service
International Telecommunication Union
Place des Nations
CH-1211 Geneve 20
Switzerland
E-Mail: sales@itu.ch
Ph: 41.22.730.6141
Fax: 41.22.730.5194
Internet: http://www.itu.org

IPC - ASSOCIATION CONNECTING ELECTRONICS INDUSTRIES (IPC)
2215 Sanders Rd.
Northbrook, IL 60062-6135
Ph: 847-509-9700
Fax: 847-509-9798
Internet: http://www.ipc.org
e-mail: orderipc@ipc.org

IRON & STEEL SOCIETY (ISS)
186 Thorn Hill Road
Warrendale, PA 15086-7528
Ph: 724-776-1535 Ext 1
Fax: 724-776-0430
E-Mail: dennisf@iss.org
Internet: http://www.issource.org

ISA - THE INSTRUMENTATION, SYSTEMS AND AUTOMATION SOCIETY (ISA)
67 Alexander Drive
P.O. Box 12277
Research Triangle Park, NC 27709
Ph: 919-549-8411
Fax: 919-549-8288
e-mail: info@isa.org
Internet: http://www.isa.org

KITCHEN CABINET MANUFACTURERS ASSOCIATION (KCMA)
1899 Preston White Dr.
Reston, VA 20191-5435
Ph: 703-264-1690
Fax: 703-620-6530
Internet: http://www.kcma.org

L.H. BAILEY HORTORIUM (LHBH)

c/o Cornell University
Information and Referral Center
Day Hall Lobby
Ithaca, NY 14853-2801
PH: 607-254-INFO (4636)
Internet: http://www.plantbio.cornell.edu/Hortorium

MANUFACTURERS STANDARDIZATION SOCIETY OF THE VALVE AND FITTINGS INDUSTRY (MSS)
127 Park St., NE
Vienna, VA 22180-4602
Ph: 703-281-6613
Fax: 703-281-6671
Internet: http://www.mss-hq.com
e-mail: info@mss-hq.com

MAPLE FLOORING MANUFACTURERS ASSOCIATION (MFMA)
60 Revere Dr., Suite 500
Northbrook, IL 60062
Ph: 847-480-9138
Fax: 847-480-9282
Internet: http://www.maplefloor.org

MARBLE INSTITUTE OF AMERICA (MIA)
30 Eden Alley, Suite 301
Columbus, OH 43215
Ph: 614-228-6194
Fax: 614-461-1497
Internet: http://www.marble-institute.com
e-mail: info@marble-institute.com

MASTER PAINTERS INSTITUTE (MPI)
4090 Graveley Street
Burnaby, BC CANADA V5C 3T6
PH: 888-674-8937
Fx: 888-211-8708
Internet: http://www.paintinfo.com/mpi

METAL BUILDING MANUFACTURERS ASSOCIATION (MBMA)
1300 Sumner Ave.
Cleveland, OH 44115-2851
Ph: 216-241-7333
Fax: 216-241-0105
Internet: http://www.mbma.com
e-mail: mbma@mbma.com

METAL LATH/STEEL FRAMING ASSOCIATION (ML/SFA)

NAAMM Headquarters

8 South Michigan Avenue, Suite 1000
Chicago, IL 60603
PH: 312-332-0405
FAX: 312-332-0706
Internet: http://www.naamm.org/mlsfa.htm
NOTE --- ML/SFA has merged with NAAMM.

MIDWEST INSULATION CONTRACTORS ASSOCIATION (MICA)
2017 So. 139th Cir.
Omaha, NE 68144
Ph: 402-342-3463
Fax: 402-330-9702
Internet: http://www.micainsulation.org
e-mail: info@micainsulation.org

MONORAIL MANUFACTURERS ASSOCIATION (MMA)

8720 Red Oak Blvd., Suite 201
Charlotte, NC 28217
PH: 704-676-1190
FAX: 704-676-1199
Internet: http://www.mhia.org/

NACE INTERNATIONAL (NACE)
1440 South Creek Drive
Houston, TX 77084-4906
Ph: 281-228-6200
Fax: 281-228-6300
Internet: http://www.nace.org

NATIONAL ASSOCIATION OF ARCHITECTURAL METAL MANUFACTURERS (NAAMM)
8 S. Michigan Ave, Suite 1000
Chicago, IL 60603
Ph: 312-322-0405
Fax: 312-332-0706
Internet: http://www.naamm.org
e-mail: naamm@gss.net

NATIONAL BOARD OF BOILER AND PRESSURE VESSEL INSPECTORS (NBBPVI)
1055 Crupper Ave.
Columbus, OH 43229-1183
Ph: 614-888-8320
Fax: 614-847-1147
Internet: http://www.nationalboard.org
e-mail: tbecker@nationalboard.org

NATIONAL CABLE TELEVISION ASSOCIATION (NCTA)
Now: National Cable Telecommunications Association
1724 Massachusetts Ave. NW
Washington, DC 20036-1969
Ph: 202-775-3550
Fax: 202-775-1055
Internet: http://www.ncta.com

NATIONAL CONCRETE MASONRY ASSOCIATION (NCMA)
13750 Sunrise Valley Drive
Herndon, VA 20171
Ph: 703-713-1900
Fax: 703-713-1910

Internet: http://www.ncma.org

NATIONAL COUNCIL ON RADIATION PROTECTION AND MEASUREMENTS (NCRP)
7910 Woodmont Ave., Suite 800
Bethesda, MD 20814-3095
Ph: 800-229-2652
Ph. 301-657-2652
Fax: 301-907-8768
Internet: http://www.ncrp.com

NATIONAL DRILLING ASSOCIATION (NDA)

10901D Roosevelt Boulevard North, Suite 100
St. Petersburg, FL 33716
Ph: 727-577-5006
FAX: 727-577-5012
Internet: http://www.nda4u.com/
E-mail: info@nda4u.com

NATIONAL ELECTRICAL MANUFACTURERS ASSOCIATION (NEMA)
1300 N. 17th St., Suite 1847
Rosslyn, VA 22209
Ph: 703-841-3200
Fax: 703-841-3300
Internet: http://www.nema.org/
E-mail: jas_peak@nema.org

NATIONAL ENVIRONMENTAL BALANCING BUREAU (NEBB)
8575 Grovemont Circle
Gaithersburg, MD 20877-4121
Ph: 301-977-3698
Fax: 301-977-9589
Internet: http://www.nebb.org

NATIONAL FENESTRATION RATING COUNCIL (NFRC)
1300 Spring Street, Suite 500
Silver Spring, MD 20910
Ph: 301-589-6372
Fax: 303-588-6342
Internet: http://www.nfrc.org
E-Mail: nfrcusa@aol.com or info@nfrc.com

NATIONAL FIRE PROTECTION ASSOCIATION (NFPA)
1 Batterymarch Park
P.O. Box 9101
Quincy, MA 02269-9101
Ph: 617-770-3000
Fax: 617-770-0700
Internet: http://www.nfpa.org

NATIONAL FLUID POWER ASSOCIATION (NFLPA)
3333 N. Mayfair Rd.
Milwaukee, WI 53222-3219
Ph: 414-778-3344
Fax: 414-778-3361
Internet: http://www.nfpa.com
E-mail: nfpa@nfpa.com

NATIONAL HARDWOOD LUMBER ASSOCIATION (NHLA)

6830 Raleigh LaGrange Road
P.O. Box 34518
Memphis, TN 38184-0518
Ph: 901-377-1818
Fax: 901-382-6419
e-mail: info@natlhardwood.org
Internet: http://www.natlhardwood.org

NATIONAL INSTITUTE FOR CERTIFICATION IN ENGINEERING TECHNOLOGIES (NICET)
1420 King Street
Alexandria, VA 22314-2794
Ph: 888-476-4238
Internet: http://www.nicet.org

NATIONAL INSTITUTE FOR OCCUPATIONAL SAFETY AND HEALTH (NIOSH)
Mail Stop C-13
4676 Columbia Parkway
Cincinnati, OH 45226-1998
Ph: 800-356-4674
Fx: 513-533-8573
Internet: http://www.cdc.gov/niosh/homepage.html
To order pubs for which a fee is charged, order from:
Superintendent of Documents
U.S. Government Printing Office
732 North Capitol Street, NW
Mailstop: SDE
Washington, DC 20401
Ph: 866-512-2800 or 202-512-1800
Fax: 202-512-2250
Internet: http://www.gpo.gov

NATIONAL INSTITUTE OF JUSTICE (NIJ)
National Law Enforcement and Corrections Technology Center
2277 Research Blvd. - Mailstop 1E
Rockville, MD 20850
Ph: 800-248-2742 or 301-519-5060
Fax: 301-519-5149
Internet: http://www.nlectc.org
e-mail: asknlectc@nlectc.org

NATIONAL INSTITUTE OF STANDARDS AND TECHNOLOGY (NIST)
100 Bureau Drive
Stop 3460
Gaithersburg, MD 20899-3460
Ph: 301-975-NIST
Internet: http://www.nist.gov
Order Publications From:
Superintendent of Documents
U.S. Government Printing Office
732 North Capitol Street, NW
Mailstop: SDE
Washington, DC 20401
Ph: 866-512-1800 or 202-512-1800
Fax: 202-512-2250
Internet: http://www.gpo.gov
or
National Technical Information Services (NTIS)
5285 Port Royal Rd.

Springfield, VA 22161
Ph: 703-605-6000
Fax: 703-605-6900
Internet: http://www.ntis.gov

NATIONAL LIME ASSOCIATION (NLA)

200 North Glebe Road, Suite 800
Arlington, VA 22203
PH: 703-243-5463
FAX: 703-243-5489
Internet: http://www.lime.org

NATIONAL OAK FLOORING MANUFACTURERS ASSOCIATION (NOFMA)
P.O. Box 3009
Memphis, TN 38173-0009
Ph: 901-526-5016
Fax: 901-526-7022
Internet: http://www.nofma.org

NATIONAL READY-MIXED CONCRETE ASSOCIATION (NRMCA)
900 Spring St.
Silver Spring, MD 20910
Ph: 301-587-1400
Fax: 301-585-4219
Internet: http://www.nrmca.org

NATIONAL ROOFING CONTRACTORS ASSOCIATION (NRCA)
10255 W. higgins Rd., Suite 600
Rosemont, IL 60018
Ph: 847-299-9070
Fax: 847-299-1183
Internet: http://www.nrca.net

NATIONAL TERRAZZO & MOSAIC ASSOCIATION (NTMA)
110 East Market St., Suite 200 A
Leesburg, Virginia 20176
Ph: 703-779-1022 or 800-323-9736
Fax: 703-779-1026
Internet: http://www.ntma.com
e-mail: info@ntma.com

NATURAL RESOURCE, AGRICULTURAL AND ENGINEERING SERVICE (NRAES)

Cooperative Extension
152 Riley-Robb Hall
Ithaca, NY 14853-5701
Ph: 607-255-7654
Fax: 607-254-8770
Internet: http://www.nraes.org
E-mail: nraes@cornell.edu

NORTH AMERICAN INSULATION MANUFACTURERS ASSOCIATION (NAIMA)
44 Canal Center Plaza, Suite 310
Alexandria, VA 22314
Ph: 703-684-0084
Fax: 703-684-0427
Internet: http://www.naima.org
e-mail: insulation@naima.org

NORTHEASTERN LUMBER MANUFACTURERS ASSOCIATION (NELMA)
272 Tuttle Road
P.O. Box 87A
Cumberland Center, ME 04021
Ph: 207-829-6901
Fax: 207-829-4293
Internet: http://www.nelma.org
e-mail: info@nelma.org

NSF INTERNATIONAL (NSF)
ATTN: Publications
789 North Dixboro Rd.
P.O. Box 130140
Ann Arbor, MI 48113-0140
Ph: 734-769-8010
Fax: 734-769-0109
Toll Free: 800-NSF-MARK
Internet: http://www.nsf.org

PIPE FABRICATION INSTITUTE (PFI)
655 32nd Avenue, Suite 201
Lachine, QC, Canada H8T 3G6
Ph: 514-634-3434
Fax: 514-634-9736
Internet: http://www.pfi-institute.org
e-mail: pfi@pfi-institute.org

PLASTIC PIPE AND FITTINGS ASSOCIATION (PPFA)
800 Roosevelt Rd., Bldg C, Suite 20
Glen Ellyn, IL 60137
Ph: 630-858-6540
Fax: 630-790-3095
Internet: http://www.ppfahome.org

PLASTICS PIPE INSTITUTE (PPI)
1825 Connecticut Ave. NW
Washington, D. C. 20009
Ph: 202-462-9607
Fax: 202-462-9779
Internet: http://www.plasticpipe.org

PLUMBING AND DRAINAGE INSTITUTE (PDI)
45 Bristol Dr.
South Easton, MA 02375
Ph: 508-230-3516 or 800-589-8956
Fax: 508-230-3529
Internet: http://www.pdionline.org
E-Mail: info@pdionline.org

PLUMBING AND MECHANICAL CONTRACTORS ASSOCIATION (PMCA)
9450 SW Commerce Circle, Suite 310
Wilsonville, OR 97070-9626
Ph: 503-682-7919
Fax: 503-682-6241
Internet: http://www.pmcaoregon.com/

PLUMBING-HEATING-COOLING CONTRACTORS NATIONAL ASSOCIATION (PHCC)
180 S. Washington Street

P.O. Box 6808
Falls Church, VA 22040
Ph: 800-533-7694
Fax: 703-237-7442
Internet: http://www.phccweb.org

PORCELAIN ENAMEL INSTITUTE (PEI)
5696 Peachtree Parkway, PO Box 920220
Norcross, GA 30092
Ph: 770-242-2632
Fax: 770-446-1452
Internet: http://www.porcelainenamel.com
e-mail: penamel@aol.com

POST-TENSIONING INSTITUTE (PTI)
1717 West Northern Avenue, Suite 114
Phoenix, AZ 85021
Ph: 602-870-7540
Fax: 602-870-7541
Internet: http://www.post-tensioning.org/

PRECAST/PRESTRESSED CONCRETE INSTITUTE (PCI)
209 West Jackson Blvd.
Chicago, IL 60606-6938
Ph: 312-786-0300
Fax: 312-786-0353
Internet: http://www.pci.org
e-mail: info@pci.org

REDWOOD INSPECTION SERVICE (RIS)

405 Efrente Drive, Suite 200
Novato, CA 94949
Ph: 415-382-0662
Fax: 415-382-8531
Internet: http://www.calredwood.org
E-Mail: cjjourdain@worldnet.att.net

RUBBER MANUFACTURERS ASSOCIATION (RMA)

1400 K St., NW, Suite 900
Washington, DC 20005
Ph: 202-682-4846
Fax: 202-682-4854
Internet: http://www.rma.org
Order Publications from:
The Mail Room
P. O. Box 3147
Medina, OH 44258
Ph: 800-325-5095 EXT 242 or 330-723-2978
Fax: 330-725-0576

SCIENTIFIC CERTIFICATION SYSTEMS (SCS)

1939 Harrison Street, Suite 400
Oakland, CA 94612
Ph: 510-832-1415
FAX: 510-832-0359
Internet: http://www.scs1.com

SCREEN MANUFACTURERS ASSOCIATION (SMA)
2850 South Ocean Boulevard, Suite 114
Palm Beach, FL 33480-5535
Ph: 561-533-0991
Fax: 561-533-7466
e-mail: fitzgeraldfscott@aol.com
Internet: http://www.smacentral.org

SEMICONDUCTOR EQUIPMENT AND MATERIALS INTERNATIONAL (SEMI)

3081 Zanker Road
San Jose, CA 95134
Phone: 1.408.943.6900
Fax: 1.408.428.9600
Internet: http://www.semi.org
E-mail: semihq@semi.org

SHEET METAL & AIR CONDITIONING CONTRACTORS' NATIONAL ASSOCIATION (SMACNA)
4201 Lafayette Center Dr.,
Chantilly, VA 20151-1209
Ph: 703-803-2980
Fax: 703-803-3732
Internet: http://www.smacna.org
e-mail: info@smacna.org

SPRI (SPRI)
200 Reservoir St., Suite 309A
Needham, MA 02494
Ph: 781-444-0242
Fax: 781-444-6111
Internet: http://www.spri.org
e-mail: spri@spri.org

SOCIETY OF AUTOMOTIVE ENGINEERS INTERNATIONAL (SAE)
400 Commonwealth Dr.
Warrendale, PA 15096-0001
Ph: 724-776-4841
Fax: 724-776-5760
Internet: http://www.sae.org
e-mail: custsvc@sae.org

SOCIETY OF MOTION PICTURE & TELEVISION ENGINEERS (SMPTE)

595 West Hartsdale Avenue
WhitePlains, New York 10607
PH: 914-761-1100
FAX: 914-761-3115
Internet: http://www.smpte.org

SPRAY POLYURETHANE FOAM ALLIANCE (SPFA)

American Plastics Council
1300 Wilson Boulevard, Suite 800
Arlington Virginia 22209
PH: 800-523-6154
FX: 703-252-0664

E-mail: feedback@sprayfoam.org
Internet: http://www.sprayfoam.org

SOLAR RATING AND CERTIFICATION CORPORATION (SRCC)

c/o FSEC, 1679 Clearlake Road
Cocoa, FL 32922-5703
PH: 321-638-1537
FAX: 321-638-1010
Internet: http://www.solar-rating.org

SOUTHERN CYPRESS MANUFACTURERS ASSOCIATION (SCMA)
400 Penn Center Boulevard, Suite 530
Pittsburgh, PA 15235
Ph: 412-829-0770
Fax: 412-829-0844
Internet: http://www.cypressinfo.org

SOUTHERN PINE INSPECTION BUREAU (SPIB)
4709 Scenic Highway
Pensacola, FL 32504-9094
Ph: 850-434-2611
Fax: 850-433-5594
e-mail: spib@spib.org
Internet: http://www.spib.org

STATE OF CALIFORNIA DEPARTMENT OF TRANSPORTATION (CDT)
Publication Distribution Unit
1900 Royal Oaks Dr.
Sacramento, CA 95815
Ph: 916-445-3520 or 916-227-7000 (CA Transportation Lab)
Fax: 916-324-8997
Internet: http://www.dot.ca.gov

STATE OF MARYLAND CODE OF MARYLAND REGULATIONS (COMAR)
1700 Margaret Avenue
Annapolis, MD 21401
phone: 410-974-2486
fax: 410-974-2546
Internet:
http://www.sos.state.md.us/sos/dsd/comar/html/comar.html

STATE OF NORTH CAROLINA ADMINISTRATIVE CODE

Internet: http://ncrules.state/nc.us

STATE OF VIRGINIA ADMINISTRATIVE CODE (VAC)
Virginia Code Commission
General Assembly Building, 2nd Floor
910 Capitol Street
Richmond, Virginia 23219
Phone: 804-786-3591
Fax: 804-692-0625
Internet:
http://legis.state.va.us/statutesandregulations/admincode.htm

STATE OF CALIFORNIA DEPARTMENT OF FOOD AND AGRICULTURE

Plant Health and Pest Prevention Services

Pest Exclusion Branch/Nursery, Seed and Cotton Program
1220 N Street, Room A-372
Sacramento CA 95814
PH: 916-653-0435
Internet: http://www.cdfa.ca.gov/phpps/nipm.htm

STEEL DECK INSTITUTE (SDI)
P.O. Box 25
Fox River Grove, IL 60021-0025
Ph: 847-462-1930
Fax: 847-462-1940
Internet: http://www.sdi.org
e-mail: Steve@sdi.org

STEEL DOOR INSTITUTE (SDOI)
30200 Detroit Rd.
Cleveland, OH 44145-1967
Ph: 440-899-0010
Fax: 440-892-1404
Internet: http://www.steeldoor.org

STEEL JOIST INSTITUTE (SJI)
3127 Tenth Ave., North Ext.
Myrtle Beach, SC 29577-6760
Ph: 843-626-1995
Fax: 843-626-5565
Internet: http://www.steeljoist.org

STEEL TANK INSTITUTE (STI)
570 Oakwood Rd.
Lake Zurich, IL 60047
Ph: 847-438-8265
Fax: 847-438-8766
Internet: http://www.steeltank.com

STEEL WINDOW INSTITUTE (SWI)
1300 Sumner Ave.
Cleveland, OH 44115-2851
Ph: 216-241-7333
Fax: 216-241-0105
Internet: http://www.steelwindows.com

TECHNICAL ASSOCIATION OF THE PULP AND PAPER INDUSTRY (TAPPI)

P.O. Box 105113
Atlanta, GA 30348-5113
PH: 800-322-8686
FAX: 770-446-6947
Internet: http://www.tappi.org

ASSOCIATION OF THE WALL AND CEILING INDUSTRIES - INTERNATIONAL (AWCI)

803 West Broad Street
Falls Church, VA 22046
PH: 703-534-8300
FAX: 703-534-8307
Internet: http://www.awci.org

INSULATING GLASS MANUFACTURERS ALLIANCE (IGMA)

27 ave Goulburn Avenue
Ottawa, Ontario. CANADA
K1N 8C7
Phone: 613-233-1510
Fax: 613-233-1929
e-mail: info@igmaonline.org
Internet: http://www.igmaonline.org

THE SOCIETY FOR PROTECTIVE COATINGS (SSPC)
40 24th Street, 6th Floor
Pittsburgh, PA 15222-4656
Ph: 412-281-2331
Fax: 412-281-9992
Internet: http://www.sspc.org

TILE COUNCIL OF AMERICA (TCA)
100 Clemson Research Blvd
Anderson, SC 29625
Ph: 864-646-8453
FAX: 864-646-2821
Internet: http://www.tileusa.com
e-mail: literature@tileusa.com

TRUSS PLATE INSTITUTE (TPI)
583 D'Onofrio Dr., Suite 200
Madison, WI 53719
Ph: 608-833-5900
Fax: 608-833-4360
Internet: http://www.tpinst.org

TUBULAR EXCHANGER MANUFACTURERS ASSOCIATION (TEMA)
25 N. Broadway
Tarrytown, NY 10591
Ph: 914-332-0040
Fax: 914-332-1541
Internet: http://www.tema.org

TURFGRASS PRODUCERS INTERNATIONAL (TPI)
1855-A Hicks Road
Rolling Meadows, IL 60008
PH: 800-405-8873
FAX: 847-705-8347
Internet: http://www.turfgrasssod.org

UNDERWRITERS LABORATORIES (UL)
333 Pfingsten Rd.
Northbrook, IL 60062-2096
Ph: 847-272-8800
Fax: 847-272-8129
Internet: http://www.ul.com/
e-mail: northbrook@us.ul.com

UNI-BELL PVC PIPE ASSOCIATION (UBPPA)
2655 Villa Creek Dr., Suite 155
Dallas, TX 75234
Ph: 214-243-3902
Fax: 214-243-3907

Internet: http://www.uni-bell.org
e-mail: info@uni-bell.org

UNIVERSITY OF CALIFORNIA DIVISION OF AGRICULTURE AND NATURAL RESOURCES (UCDANR)
FRANKLIN BUILDING
1111 Franklin St., 6th floor
Oakland, CA 94607-5200
Internet: http://http://www.ucanr.org

U.S. AIR FORCE (USAF)
Air Force Publishing Distribution Center
Ph: 410-687-3330
E-mail: afpdc-service@pentagon.af.mil
Internet: http://www.e-publishing.af.mil/

U.S. ARMY (DA)

U.S. Army Publications Agency
Internet: http://www.usapa.army.mil/
AOK: 4/02
LOK: 7/02

U.S. ARMY CORPS OF ENGINEERS (USACE)

Order CRD-C DOCUMENTS from:
U.S. Army Engineer Waterways Experiment Station
ATTN: Technical Report Distribution Section, Services Branch, TIC
3909 Halls Ferry Rd.
Vicksburg, MS 39180-6199
Ph: 601-634-2664
Fax: 601-634-2388
Internet: http://www.wes.army.mil/SL/MTC/handbook/handbook.htm

Order Other Documents from:
USACE Publications Depot
Attn: CEIM-SP-D
2803 52nd Avenue
Hyattsville, MD 20781-1102
Ph: 301-394-0081
Fax: 301-394-0084
Internet: http://www.usace.army.mil/publications
or http://www.hnd.usace.army.mil/techinfo/index.htm

U. S. ARMY EDGEWOOD RESEARCH, DEVELOPMENT, AND ENGINEERING CENTER (EA)

Aberdeen Proving Ground, MD
Internet: Unknown

U.S. ARMY ENVIRONMENTAL CENTER (AEC)

5179 Hoadley Road
Aberdeen Proving Ground, MD 21010-5401
Internet: http://aec.army.mil
Order from:
National Technical Information Services (NTIS)
5285 Port Royal Rd.

Springfield, VA 22161
Ph: 703-605-6000
Fax: 703-605-6900
Internet: http://www.ntis.gov

U. S. ARMY ENVIRONMENTAL HYGIENE AGENCY (USAEHA)

Now: U.S. Army Center for Health Promotion and Preventive Medicine (USACHPPM)
5158 Blackhawk Road
Aberdeen Proving Ground
MD 21010-5403
PH: 800-222-9698; website
Internet: http://chppm-www.apgea.army.mil

U.S. BUREAU OF RECLAMATION (BOR)

Denver Federal Center
P.O. Box 25007
Denver, CO 80225
Ph: 303-445-2080
Internet: http://www.usbr.gov
Order from:
National Technical Information
Services (NTIS)
5285 Port Royal Rd.
Springfield, VA 22161
Ph: 703-605-6000
Fax: 703-605-6900
Internet: http://www.ntis.gov

U.S. DEFENSE COMMUNICATIONS AGENCY (DCA)

Now: Information Systems Agency (DISA)
Washington, D.C. 20305-2000
Telephone:
FAX:
Internet: Not found

U.S. DEFENSE INTELLIGENCE AGENCY (DIA)

Defense Intelligence Analysis Center (DIAC)
MacDill Boulevard and Luke Avenue
Bolling AFB, MD
Internet: http://www.dia.mil

U.S. DEFENSE LOGISTICS AGENCY (DLA)

Andrew T. McNamara Building
8725 John J. Kingman Road
Fort Belvoir, VA 22060
Internet: http://www.dla.mil

U.S. DEPARTMENT OF AGRICULTURE (USDA)

Order AMS Publications from:
AGRICULTURAL MARKETING SERVICE (AMS)
Seed Regulatory and Testing Branch

USDA, AMS, LS Div.
Room 209, Bldg. 306, BARC-East
Beltsville, MD 20705-2325
Ph: 301-504-9430
Fax: 301-504-8098
Internet: http://www.ams.usda.gov/lsg/seed.htm
e-mail: jeri.irwin@usda.gov

Order Other Publications from:
U.S. Department of Agriculture
14th and Independence Ave., SW, Room 4028-S
Washington, DC 20250
Ph: 202-720-2791
Fax: 202-720-2166
Internet: http://www.usda.gov

U.S. DEPARTMENT OF COMMERCE (DOC)

1401 Constitution Avenue, NW
Washington, DC 20230
Internet: http://www.commerce.gov/

Order Publications From:
National Technical Information Service
5285 Port Royal Road
Springfield, VA 22161
Ph: 703-605-6000
Fax: 703-605-6900
Internet: http://www.ntis.gov

U.S. DEPARTMENT OF DEFENSE (DOD)

Order DOD Documents from:
National Technical Information Service
5285 Port Royal Road
Springfield, VA 22161
Ph: 703-605-6000
FAX: 703-605-6900
Internet: http://www.ntis.gov

Order Military Specifications, Standards and Related Publications from:
Department of Defense Single Stock Point for (DODSSP)
Defense Automation and Production Service (DAPS)
Bldg 4D
700 Robbins AV
Philadelphia, PA 19111-5094
Ph: 215-697-2179
Fax: 215-697-1462
Internet: http://www.dodssp.daps.mil

U.S. DEPARTMENT OF HOUSING AND URBAN DEVELOPMENT (HUD)
Order from:
HUD User
P.O. Box 6091
Rockville, MD 20849
Ph: 800-245-2691
Fax: 301-519-5767
Internet: http://www.huduser.org

e-mail: Huduser@aspensys.com

U.S. DEPARTMENT OF STATE (SD)

2201 C Street, NW
Washington, DC 20520
Ph: 202-647-4000
Internet: http://www.state.gov

U.S. DEPARTMENT OF TRANSPORTATION (DOT)
400 7th Street, SW
Washington, DC 20590
PH: 202-366-4000
Internet: http://www.dot.gov

U.S. ENVIRONMENTAL PROTECTION AGENCY (EPA)
Ariel Rios Building
1200 Pennsylvania Avenue, N.W.
Washington, DC 20460
Ph: 202-260-2090
FAX: 202-260-6257
Internet: http://www.epa.gov

NOTE --- Some documents are available only from:
National Technical Information Services (NTIS)
5285 Port Royal Rd.
Springfield, VA 22161
Ph: 703-605-6000
Fax: 703-605-6900
Internet: http://www.ntis.gov

U.S. FEDERAL AVIATION ADMINISTRATION (FAA)
Order for sale documents from:
Superintendant of Documents
P.O. Box 371954
Pittsburgh, PA 15250-7954
PH: 202-512-1800 (order desk)
Internet: http://www.gpo.gov

Order free documents from:
Federal Aviation Administration
Dept. of Transportation
Ardmore East Business Center
33410 75th Avenue
Landover, MD 20785
Ph:
FAX: 301-386-5394

Internet: http://www.faa.gov

U.S. FEDERAL COMMUNICATIONS COMMISSION (FCC)
445 12th Street SW
Washington, DC 20554
Phone: 888-CALL-FCC
Fax: 202-418-0232
Internet: http://www.fcc.gov
E-mail: fccinfo@fcc.gov

U.S. FEDERAL EMERGENCY MANAGEMENT AGENCY (FEMA)
500 C Street, SW
Washington, D.C. 20472
Phone: 202-566-1600
Internet: http://www.fema.gov

U.S. FEDERAL HIGHWAY ADMINISTRATION (FHWA)
Office of Highway Safety (HHS-31)
400 Seventh St., SW
Washington, DC 20590-0001
Ph: 202-366-0411
Fax: 202-366-2249
Internet: http://www.fhwa.dot.gov
Order from:

Superintendant of Documents
U. S. Government Printing Office
732 North Capitol Street, NW
Mailstop: SDE
Washington, DC 20401
Ph: 866-512-1800 or 202-512-1800
Fax: 202-512-2250
Internet: http://www.gpo.gov

U.S. GENERAL SERVICES ADMINISTRATION (GSA)

General Services Administration
1800 F Street, NW
Washington, DC 20405
PH: 202-501-0705

Order from:
General Services Administration
Federal Supply Service Bureau
1941 Jefferson Davis Highway
Arlington, VA 22202
PH: 703-605-5400
Internet: http://www.fss.gsa.gov/pub/fed-specs.cfm

U.S. NATIONAL ARCHIVES AND RECORDS ADMINISTRATION (NARA)
700 Pennsylvania Avenue, N.W.
Washington, D.C. 20408
Phone: 866-325-7208
Internet: http://www.archives.gov

Order documents from:
Superintendent of Documents
U.S.Government Printing Office
732 North Capitol Street, NW
Washington, DC 20401
Mailstop: SDE
Ph: 866-512-1800 or 202-512-1800
Fax: 202-512-2250
Internet: http://www.gpo.gov
E-mail: gpoaccess@gpo.gov

U.S. NAVAL FACILITIES ENGINEERING COMMAND (NAVFAC)
1510 Gilbert St.
Norfolk, VA 23511-2699

Ph: 757-322-4200
Fax: 757-322-4416
Internet: http://www.efdlant.navfac.navy.mil/LANTOPS_15

U.S. NAVAL FACILITIES ENGINEERING SERVICE CENTER (NFESC)
1100 23rd Avenue
Port Hueneme, CA 93043-4370
Ph: 805-982-4980
Internet: http://www.nfesc.navy.mil

WATER ENVIRONMENT FEDERATION (WEF)
601 Wythe St.
Alexandria, VA 22314-1994
Ph: 703-684-2452
Fax: 703-684-2492
Internet: http://www.wef.org

WATER QUALITY ASSOCIATION (WQA)
4151 Naperville Rd.
Lisle, IL 60532
Ph: 630-505-0160
Fax: 630-505-9637
Internet: http://www.wqa.org
e-mail: info@mail.wqa.org

WEST COAST LUMBER INSPECTION BUREAU (WCLIB)
P.O. Box 23145
Portland, OR 97281
Ph: 503-639-0651
Fax: 503-684-8928
Internet: http://www.wclib.org
e-mail: info@wclib.org

WESTERN WOOD PRESERVERS INSTITUTE (WWPI)
7017 N.E. Highway 99 # 108
Vancover, WA 98665
Ph: 360-693-9958
Fax: 360-693-9967
Internet: http://www.wwpinstitute.org
e-mail: info@wwpinstitute.org

WESTERN WOOD PRODUCTS ASSOCIATION (WWPA)
Yeon Bldg.
522 SW 5th Ave.
Suite 500
Portland, OR 97204-2122
Ph: 503-224-3930
Fax: 503-224-3934
Internet: http://www.wwpa.org
e-mail: info@wwpa.org

WINDOW AND DOOR MANUFACTURERS ASSOCIATION (WDMA)
1400 East Touhy Ave., Suite 470
Des Plaines, IL 60018
Ph: 847-299-5200 or 800-223-2301
Fax: 708-299-1286
Internet: http://www.wdma.com
e-mail: admin@wdma.com

WOOD MOULDING AND MILLWORK PRODUCERS ASSOCIATION (WMMPA)
507 First Street
Woodland, CA 95695
Ph: 530-661-9591 or 800-550-7889
Fax: 530-661-9586
Internet: http://www.wmmpa.com

-- End of Section --

SECTION TABLE OF CONTENTS

DIVISION 01 - GENERAL REQUIREMENTS

SECTION 01451A

CONTRACTOR QUALITY CONTROL

05/02

PART 1 GENERAL

1.1 REFERENCES
1.2 PAYMENT

PART 2 PRODUCTS (Not Applicable)

PART 3 EXECUTION

3.1 GENERAL REQUIREMENTS
3.2 QUALITY CONTROL PLAN
3.2.1 Content of the CQC Plan
3.2.2 Additional Requirements for Design Quality Control (DQC) Plan
3.2.3 Acceptance of Plan
3.2.4 Notification of Changes
3.3 COORDINATION MEETING
3.4 QUALITY CONTROL ORGANIZATION
3.4.1 Personnel Requirements
3.4.2 CQC System Manager
3.4.3 CQC Personnel
3.4.4 Additional Requirement
3.4.5 Organizational Changes
3.5 SUBMITTALS AND DELIVERABLES
3.6 CONTROL
3.6.1 Preparatory Phase
3.6.2 Initial Phase
3.6.3 Follow-up Phase
3.6.4 Additional Preparatory and Initial Phases
3.7 TESTS
3.7.1 Testing Procedure
3.7.2 Testing Laboratories
3.7.2.1 Capability Check
3.7.2.2 Capability Recheck
3.7.3 Onsite Laboratory
3.7.4 Furnishing or Transportation of Samples for Testing
3.8 COMPLETION INSPECTION
3.8.1 Punch-Out Inspection
3.8.2 Pre-Final Inspection
3.8.3 Final Acceptance Inspection
3.9 DOCUMENTATION
3.10 SAMPLE FORMS
3.11 NOTIFICATION OF NONCOMPLIANCE

-- End of Section Table of Contents --

UFGS-01451A (May 2002)

SECTION 01451A

CONTRACTOR QUALITY CONTROL
05/02

PART 1 GENERAL

1.1 REFERENCES

The publications listed below form a part of this specification to the extent referenced. The publications are referred to in the text by basic designation only.

AMERICAN SOCIETY FOR TESTING AND MATERIALS (ASTM)

ASTM D 3740	(2001) Minimum Requirements for Agencies Engaged in the Testing and/or Inspection of Soil and Rock as Used in Engineering Design and Construction
ASTM E 329	(2000b) Agencies Engaged in the Testing and/or Inspection of Materials Used in Construction

1.2 PAYMENT

Separate payment will not be made for providing and maintaining an effective Quality Control program, and all costs associated therewith shall be included in the applicable unit prices or lump-sum prices contained in the Bidding Schedule.

PART 2 PRODUCTS (Not Applicable)

PART 3 EXECUTION

3.1 GENERAL REQUIREMENTS

The Contractor is responsible for quality control and shall establish and maintain an effective quality control system in compliance with the Contract Clause titled "Inspection of Construction." The quality control system shall consist of plans, procedures, and organization necessary to produce an end product which complies with the contract requirements. The system shall cover all constructiondesign and construction operations, both onsite and offsite, and shall be keyed to the proposed construction sequence. The site project superintendent will be held responsible for the quality of work on the job and is subject to removal by the Contracting Officer for non-compliance with the quality requirements specified in the contract. The site project superintendent in this context shall be the highest level manager responsible for the overall construction activities at the site, including quality and production. The site project superintendent shall maintain a physical presence at the site at all times, except as otherwise acceptable to the Contracting Officer, and shall be responsible for all construction and construction related activities at the site.

3.2 QUALITY CONTROL PLAN

The Contractor shall furnish for review by the Government, not later than 5 days after receipt of notice to proceed, the Contractor Quality Control (CQC) Plan proposed to implement the requirements of the Contract Clause titled "Inspection of Construction." The plan shall identify personnel, procedures, control, instructions, tests, records, and forms to be used. The Government will consider an interim plan for the first 30 days of operation. ConstructionDesign and construction will be permitted to begin only after acceptance of the CQC Plan or acceptance of an interim plan applicable to the particular feature of work to be started. Work outside of the features of work included in an accepted interim plan will not be permitted to begin until acceptance of a CQC Plan or another interim plan containing the additional features of work to be started.

3.2.1 Content of the CQC Plan

The CQC Plan shall include, as a minimum, the following to cover all design and constructionconstruction operations, both onsite and offsite, including work by subcontractors, fabricators, suppliers, and purchasing agents subcontractors, designers of record, consultants, architect/engineers (AE), fabricators, suppliers, and purchasing agents:

a. A description of the quality control organization, including a chart showing lines of authority and acknowledgment that the CQC staff shall implement the three phase control system for all aspects of the work specified. The staff shall include a CQC System Manager who shall report to the project superintendent.

b. The name, qualifications (in resume format), duties, responsibilities, and authorities of each person assigned a CQC function.

c. A copy of the letter to the CQC System Manager signed by an authorized official of the firm which describes the responsibilities and delegates sufficient authorities to adequately perform the functions of the CQC System Manager, including authority to stop work which is not in compliance with the contract. The CQC System Manager shall issue letters of direction to all other various quality control representatives outlining duties, authorities, and responsibilities. Copies of these letters shall also be furnished to the Government.

d. Procedures for scheduling, reviewing, certifying, and managing submittals, including those of subcontractors, offsite fabricators, suppliers, and purchasing agentssubcontractors, designers of record, consultants, architect engineers (AE), offsite fabricators, suppliers, and purchasing agents. These procedures shall be in accordance with Section 01330 SUBMITTAL PROCEDURES.

e. Control, verification, and acceptance testing procedures for each specific test to include the test name, specification paragraph requiring test, feature of work to be tested, test frequency, and person responsible for each test. (Laboratory facilities must be approved by the Contracting Officer.)

f. Procedures for tracking preparatory, initial, and follow-up

control phases and control, verification, and acceptance tests including documentation.

g. Procedures for tracking constructiondesign and construction deficiencies from identification through acceptable corrective action. These procedures shall establish verification that identified deficiencies have been corrected.

h. Reporting procedures, including proposed reporting formats.

i. A list of the definable features of work. A definable feature of work is a task which is separate and distinct from other tasks, has separate control requirements, and may be identified by different trades or disciplines, or it may be work by the same trade in a different environment. Although each section of the specifications may generally be considered as a definable feature of work, there are frequently more than one definable features under a particular section. This list will be agreed upon during the coordination meeting.

3.2.2 Additional Requirements for Design Quality Control (DQC) Plan

The followng additional requirements apply to the Design Quality Control (DQC) plan:

(1) The Contractor's QCP Plan shall provide and maintain a Design Quality Control (DQC) Plan as an effective quality control program which will assure that all services required by this design-build contract are performed and provided in a manner that meets professional architectural and engineering quality standards. As a minimum, all documents shall be technically reviewed by competent, independent reviewers identified in the DQC Plan. The same element that produced the product shall not perform the independent technical review (ITR). In addition, the DQC Plan shall incorporate the Lessons Learned Databases provided by the Government. The Contractor shall correct errors and deficiencies in the design documents prior to submitting them to the Government.

(2) The Contractor shall include the design schedule in the master project schedule, showing the sequence of events involved in carrying out the project design tasks within the specific contract period. This should be at a detailed level of scheduling sufficient to identify all major design tasks, including those that control the flow of work. The schedule shall include review and correction periods associated with each item. This should be a forward planning as well as a project monitoring tool. The schedule reflects calendar days and not dates for each activity. If the schedule is changed, the Contractor shall submit a revised schedule reflecting the change within 7 calendar days. The Contractor shall include in the DQC Plan the discipline-specific checklists to be used during the design and quality control of each submittal. These completed checklists shall be submitted at each design phase as part of the project documentation. Example checklists can be found in ER 1110-1-12.

(3) The DQC Plan shall be implemented by an Design Quality Control Manager who has the responsibility of being cognizant of

and assuring that all documents on the project have been coordinated. This individual shall be a person who has verifiable engineering or architectural design experience and is a registered professional engineer or architect. The Contractor shall notify the Contracting Officer, in writing, of the name of the individual, and the name of an alternate person assigned to the position.

The Contracting Officer will notify the Contractor in writing of the acceptance of the DQC Plan. After acceptance, any changes proposed by the Contractor are subject to the acceptance of the Contracting Officer.

3.2.3 Acceptance of Plan

Acceptance of the Contractor's plan is required prior to the start of constructiondesign and construction. Acceptance is conditional and will be predicated on satisfactory performance during the constructiondesign and construction. The Government reserves the right to require the Contractor to make changes in his CQC Plan and operations including removal of personnel, as necessary, to obtain the quality specified.

3.2.4 Notification of Changes

After acceptance of the CQC Plan, the Contractor shall notify the Contracting Officer in writing of any proposed change. Proposed changes are subject to acceptance by the Contracting Officer.

3.3 COORDINATION MEETING

After the Preconstruction Conference, before start of construction, Postaward Conference, before start of design or construction, and prior to acceptance by the Government of the CQC Plan, the Contractor shall meet with the Contracting Officer or Authorized Representative and discuss the Contractor's quality control system. The CQC Plan shall be submitted for review a minimum of 7 calendar days prior to the Coordination Meeting. During the meeting, a mutual understanding of the system details shall be developed, including the forms for recording the CQC operationsoperations, design activities, control activities, testing, administration of the system for both onsite and offsite work, and the interrelationship of Contractor's Management and control with the Government's Quality Assurance. Minutes of the meeting shall be prepared by the Government and signed by both the Contractor and the Contracting Officer. The minutes shall become a part of the contract file. There may be occasions when subsequent conferences will be called by either party to reconfirm mutual understandings and/or address deficiencies in the CQC system or procedures which may require corrective action by the Contractor.

3.4 QUALITY CONTROL ORGANIZATION

3.4.1 Personnel Requirements

The requirements for the CQC organization are a CQC System ManagerCQC System Manager, a Design Quality Manager, and sufficient number of additional qualified personnel to ensure safety and contract compliance. The Safety and Health Manager shall receive direction and authority from the CQC System Manager and shall serve as a member of the CQC staff. Personnel identified in the technical provisions as requiring specialized skills to assure the required work is being performed properly will also be

included as part of the CQC organization.The Contractor's CQC staff shall maintain a presence at the site at all times during progress of the work and have complete authority and responsibility to take any action necessary to ensure contract compliance. The CQC staff shall be subject to acceptance by the Contracting Officer. The Contractor shall provide adequate office space, filing systems and other resources as necessary to maintain an effective and fully functional CQC organization. Complete records of all letters, material submittals, show drawing submittals, schedules and all other project documentation shall be promptly furnished to the CQC organization by the Contractor. The CQC organization shall be responsible to maintain these documents and records at the site at all times, except as otherwise acceptable to the Contracting Officer.

3.4.2 CQC System Manager

The Contractor shall identify as CQC System Manager an individual within the onsite work organization who shall be responsible for overall management of CQC and have the authority to act in all CQC matters for the Contractor. The CQC System Manager shall be a graduate engineer, graduate of construction management or a construction person with a minimum of 10 years' construction experience on construction similar to this contract. This CQC System Manager shall be on the site at all times during construction and shall be employed by the prime Contractor. The CQC System Manager shall be assigned no other duties. An alternate for the CQC System Manager shall be identified in the plan to serve in the event of the System Manager's absence. The requirements for the alternate shall be the same as for the designated CQC System Manager.

3.4.3 CQC Personnel

In addition to CQC personnel specified elsewhere in the contract, the Contractor shall provide as part of the CQC organization specialized personnel to assist the CQC System Manager for the following areas: electrical, materials technician, and submittals clerk. These individuals shall be directly employed by the prime Contractor; be responsible to the CQC System Manager; be physically present at the construction site during work on their areas of responsibility; have the necessary education and/or experience in accordance with the experience matrix listed herein. These individuals may perform other duties but must be allowed sufficient time to perform their assigned quality control duties as described in the Quality Control Plan.

Experience Matrix

	Area	Qualifications
a.	Electrical	Graduate Electrical Engineer with 10 years' experience or a construction person with 10 years' of related experience
b	Materials Technician	Materials Technician with 5 years' of related experience
d	Submittals	Submittal Clerk with 2

Experience Matrix

Area	Qualifications
	years' experience

3.4.4 Additional Requirement

In addition to the above experience and education requirements the CQC System Manager shall have completed the course entitled "Construction Quality Management For Contractors". This course is offered on a quarterly basis within the Savannah District boundaries. CQC System Managers who have not successfully completed this course must attend the next available training session. Failure to successfully complete this training within the next available training date will be grounds for removal as CQC System Manager. There is currently a nominal fee to cover the cost of the training materials for Contractors who have current contracts with the Savannah District.

3.4.5 Organizational Changes

The Contractor shall maintain the CQC staff at full strength at all times. When it is necessary to make changes to the CQC staff, the Contractor shall revise the CQC Plan to reflect the changes and submit the changes to the Contracting Officer for acceptance.

3.5 SUBMITTALS AND DELIVERABLES

Submittals, if needed, shall be made as specified in Section 01330 SUBMITTAL PROCEDURES. The CQC organization shall be responsible for certifying that all submittals and deliverables are in compliance with the contract requirements. When Section 15950A HEATING, VENTILATING AND AIR CONDITIONING (HVAC) CONTROL SYSTEMS; 15951A DIRECT DIGITAL CONTROL FOR HVAC; 15990A TESTING, ADJUSTING, AND BALANCING OF HVAC SYSTEMS; or 15995A COMMISSIONING OF HVAC SYSTEMS are included in the contract, the submittals required by those sections shall be coordinated with Section 01330 SUBMITTAL PROCEDURES to ensure adequate time is allowed for each type of submittal required.

3.6 CONTROL

Contractor Quality Control is the means by which the Contractor ensures that the construction, to include that of subcontractors and suppliers, complies with the requirements of the contract. At least three phases of control shall be conducted by the CQC System Manager for each definable feature of the construction work as follows:

3.6.1 Preparatory Phase

This phase shall be performed prior to beginning work on each definable feature of work, after all required plans/documents/materials are approved/accepted, and after copies are at the work site. This phase shall include:

a. A review of each paragraph of applicable specifications, reference codes, and standards. A copy of those sections of referenced codes and standards applicable to that portion of the work to be accomplished in the field shall be made available by the

Contractor at the preparatory inspection. These copies shall be maintained in the field and available for use by Government personnel until final acceptance of the work.

b. A review of the contract drawings.

c. A check to assure that all materials and/or equipment have been tested, submitted, and approved.

d. Review of provisions that have been made to provide required control inspection and testing.

e. Examination of the work area to assure that all required preliminary work has been completed and is in compliance with the contract.

f. A physical examination of required materials, equipment, and sample work to assure that they are on hand, conform to approved shop drawings or submitted data, and are properly stored.

g. A review of the appropriate activity hazard analysis to assure safety requirements are met.

h. Discussion of procedures for controlling quality of the work including repetitive deficiencies. Document construction tolerances and workmanship standards for that feature of work.

i. A check to ensure that the portion of the plan for the work to be performed has been accepted by the Contracting Officer.

j. Discussion of the initial control phase.

k. The Government shall be notified at least 48 hours in advance of beginning the preparatory control phase. This phase shall include a meeting conducted by the CQC System Manager and attended by the superintendent, other CQC personnel (as applicable), and the foreman responsible for the definable feature. The results of the preparatory phase actions shall be documented by separate minutes prepared by the CQC System Manager and attached to the daily CQC report. The Contractor shall instruct applicable workers as to the acceptable level of workmanship required in order to meet contract specifications.

3.6.2 Initial Phase

This phase shall be accomplished at the beginning of a definable feature of work. The following shall be accomplished:

a. A check of work to ensure that it is in full compliance with contract requirements. Review minutes of the preparatory meeting.

b. Verify adequacy of controls to ensure full contract compliance. Verify required control inspection and testing.

c. Establish level of workmanship and verify that it meets minimum acceptable workmanship standards. Compare with required sample panels as appropriate.

d. Resolve all differences.

e. Check safety to include compliance with and upgrading of the safety plan and activity hazard analysis. Review the activity analysis with each worker.

f. The Government shall be notified at least 24 hours in advance of beginning the initial phase. Separate minutes of this phase shall be prepared by the CQC System Manager and attached to the daily CQC report. Exact location of initial phase shall be indicated for future reference and comparison with follow-up phases.

g. The initial phase should be repeated for each new crew to work onsite, or any time acceptable specified quality standards are not being met.

3.6.3 Follow-up Phase

Daily checks shall be performed to assure control activities, including control testing, are providing continued compliance with contract requirements, until completion of the particular feature of work. The checks shall be made a matter of record in the CQC documentation. Final follow-up checks shall be conducted and all deficiencies corrected prior to the start of additional features of work which may be affected by the deficient work. The Contractor shall not build upon nor conceal non-conforming work.

3.6.4 Additional Preparatory and Initial Phases

Additional preparatory and initial phases shall be conducted on the same definable features of work if: the quality of on-going work is unacceptable; if there are changes in the applicable CQC staff, onsite production supervision or work crew; if work on a definable feature is resumed after a substantial period of inactivity; or if other problems develop.

3.7 TESTS

3.7.1 Testing Procedure

The Contractor shall perform specified or required tests to verify that control measures are adequate to provide a product which conforms to contract requirements. Upon request, the Contractor shall furnish to the Government duplicate samples of test specimens for possible testing by the Government. Testing includes operation and/or acceptance tests when specified. The Contractor shall procure the services of a Corps of Engineers approved testing laboratory or establish an approved testing laboratory at the project site. The Contractor shall perform the following activities and record and provide the following data:

a. Verify that testing procedures comply with contract requirements.

b. Verify that facilities and testing equipment are available and comply with testing standards.

c. Check test instrument calibration data against certified standards.

d. Verify that recording forms and test identification control number system, including all of the test documentation requirements, have been prepared.

e. Results of all tests taken, both passing and failing tests, shall be recorded on the CQC report for the date taken. Specification paragraph reference, location where tests were taken, and the sequential control number identifying the test shall be given. If approved by the Contracting Officer, actual test reports may be submitted later with a reference to the test number and date taken. An information copy of tests performed by an offsite or commercial test facility shall be provided directly to the Contracting Officer. Failure to submit timely test reports as stated may result in nonpayment for related work performed and disapproval of the test facility for this contract.

3.7.2 Testing Laboratories

3.7.2.1 Capability Check

The Government reserves the right to check laboratory equipment in the proposed laboratory for compliance with the standards set forth in the contract specifications and to check the laboratory technician's testing procedures and techniques. Laboratories utilized for testing soils, concrete, asphalt, and steel shall meet criteria detailed in ASTM D 3740 and ASTM E 329.

3.7.2.2 Capability Recheck

If the selected laboratory fails the capability check, the Contractor will be assessed a charge to reimburse the Government for each succeeding recheck of the laboratory or the checking of a subsequently selected laboratory. Such costs will be deducted from the contract amount due the Contractor.

3.7.3 Onsite Laboratory

The Government reserves the right to utilize the Contractor's control testing laboratory and equipment to make assurance tests, and to check the Contractor's testing procedures, techniques, and test results at no additional cost to the Government.

3.7.4 Furnishing or Transportation of Samples for Testing

Costs incidental to the transportation of samples or materials shall be borne by the Contractor. Samples of materials for test verification and acceptance testing by the Government shall be delivered to the following address:

US Army Engineer District, Savannah
Environmental & Materials Unit
200 North Cobb Parkway
Building 400, Suite 404
Marietta, GA 30062

Coordination for each specific test will be made through the Area Office.

3.8 COMPLETION INSPECTION

3.8.1 Punch-Out Inspection

Near the end of the work, or any increment of the work established by a

time stated in the Special Clause, "Commencement, Prosecution, and Completion of Work", or by the specifications, the CQC Manager shall conduct an inspection of the work. A punch list of items which do not conform to the approved drawings and specifications shall be prepared and included in the CQC documentation, as required by paragraph DOCUMENTATION. The list of deficiencies shall include the estimated date by which the deficiencies will be corrected. The CQC System Manager or staff shall make a second inspection to ascertain that all deficiencies have been corrected. Once this is accomplished, the Contractor shall notify the Government that the facility is ready for the Government Pre-Final inspection.

3.8.2 Pre-Final Inspection

The Government will perform the pre-final inspection to verify that the facility is complete and ready to be occupied. A Government Pre-Final Punch List may be developed as a result of this inspection. The Contractor's CQC System Manager shall ensure that all items on this list have been corrected before notifying the Government, so that a Final inspection with the customer can be scheduled. Any items noted on the Pre-Final inspection shall be corrected in a timely manner. These inspections and any deficiency corrections required by this paragraph shall be accomplished within the time slated for completion of the entire work or any particular increment of the work if the project is divided into increments by separate completion dates.

3.8.3 Final Acceptance Inspection

The Contractor's Quality Control Inspection personnel, plus the superintendent or other primary management person, and the Contracting Officer's Representative shall be in attendance at the final acceptance inspection. Additional Government personnel including, but not limited to, those from Base/Post Civil Facility Engineer user groups, and major commands may also be in attendance. The final acceptance inspection will be formally scheduled by the Contracting Officer based upon results of the Pre-Final inspection. Notice shall be given to the Contracting Officer at least 14 days prior to the final acceptance inspection and shall include the Contractor's assurance that all specific items previously identified to the Contractor as being unacceptable, along with all remaining work performed under the contract, will be complete and acceptable by the date scheduled for the final acceptance inspection. Failure of the Contractor to have all contract work acceptably complete for this inspection will be cause for the Contracting Officer to bill the Contractor for the Government's additional inspection cost in accordance with the contract clause titled "Inspection of Construction".

3.9 DOCUMENTATION

The Contractor shall maintain current records providing factual evidence that required quality control activities and/or tests have been performed. These records shall include the work of subcontractors and suppliers and shall be on an acceptable form that includes, as a minimum, the following information:

a. Contractor/subcontractor and their area of responsibility.

b. Operating plant/equipment with hours worked, idle, or down for repair.

c. Work performed each day, giving location, description, and by

whom. When Network Analysis (NAS) is used, identify each phase of work performed each day by NAS activity number.

d. Test and/or control activities performed with results and references to specifications/drawings requirements. The control phase shall be identified (Preparatory, Initial, Follow-up). List of deficiencies noted, along with corrective action.

e. Quantity of materials received at the site with statement as to acceptability, storage, and reference to specifications/drawings requirements.

f. Submittals and deliverables reviewed, with contract reference, by whom, and action taken.

g. Offsite surveillance activities, including actions taken.

h. Job safety evaluations stating what was checked, results, and instructions or corrective actions.

i. Instructions given/received and conflicts in plans and/or specifications.

j. Contractor's verification statement.

These records shall indicate a description of trades working on the project; the number of personnel working; weather conditions encountered; and any delays encountered. These records shall cover both conforming and deficient features and shall include a statement that equipment and materials incorporated in the work and workmanship comply with the contract. The original and one copy of these records in report form shall be furnished to the Government daily within 24 hours after the date covered by the report, except that reports need not be submitted for days on which no work is performed. As a minimum, one report shall be prepared and submitted for every 7 days of no work and on the last day of a no work period. All calendar days shall be accounted for throughout the life of the contract. The first report following a day of no work shall be for that day only. Reports shall be signed and dated by the CQC System Manager. The report from the CQC System Manager shall include copies of test reports and copies of reports prepared by all subordinate quality control personnel.

3.10 SAMPLE FORMS

Sample forms are included in Attachment 1 to Section 00800.

3.11 NOTIFICATION OF NONCOMPLIANCE

The Contracting Officer will notify the Contractor of any detected noncompliance with the foregoing requirements. The Contractor shall take immediate corrective action after receipt of such notice. Such notice, when delivered to the Contractor at the work site, shall be deemed sufficient for the purpose of notification. If the Contractor fails or refuses to comply promptly, the Contracting Officer may issue an order stopping all or part of the work until satisfactory corrective action has been taken. No part of the time lost due to such stop orders shall be made the subject of claim for extension of time or for excess costs or damages by the Contractor.

-- End of Section --

SECTION TABLE OF CONTENTS

DIVISION 01 - GENERAL REQUIREMENTS

SECTION 01500

TEMPORARY CONSTRUCTION FACILITIES

02/97

PART 1 GENERAL

1.1 GENERAL REQUIREMENTS
1.1.1 Site Plan
1.1.2 Identification of Employees
1.1.3 Employee Parking
1.2 AVAILABILITY AND USE OF UTILITY SERVICES
1.2.1 Payment for Utility Services
1.2.2 Meters and Temporary Connections
1.2.3 Advance Deposit
1.2.4 Final Meter Reading
1.2.5 Sanitation
1.2.6 Telephone
1.3 BULLETIN BOARD, PROJECT SIGN, AND PROJECT SAFETY SIGN
1.3.1 Bulletin Board
1.3.2 Project Signs
1.4 PROTECTION AND MAINTENANCE OF TRAFFIC
1.4.1 Haul Roads
1.4.2 Barricades
1.5 CONTRACTOR'S TEMPORARY FACILITIES
1.5.1 Administrative Field Offices
1.5.2 Storage Area
1.5.3 Supplemental Storage Area
1.5.4 Appearance of Trailers
1.5.5 Maintenance of Storage Area
1.5.6 New Building
1.5.7 Security Provisions
1.6 PLANT COMMUNICATION
1.7 TEMPORARY PROJECT SAFETY FENCING
1.8 PARTNERING
1.9 INSTALLATION REGULATIONS
1.10 TESTING LABORATORIES
1.10.1 Approved Testing Laboratories
1.10.2 Other Laboratory Services
1.11 CONSTRUCTION SCHEDULE RESTRAINTS - POPE AFB, NC
1.11.1 Occupancy
1.11.2 Protection
1.11.3 Phasing and Sequence
1.11.3.1 General
1.11.3.2 Special Work Restraints
1.11.4 Time of Performance
1.11.4.1 Work Requiring Access
1.11.4.2 Utility/Building System Outages
1.11.5 Outages
1.11.6 Continuity
1.11.7 Construction/Site Management for Construction on AMC Installations
1.11.7.1 General

1.11.7.2 Contractor's Temporary Facilities
1.12 REQUEST FOR INFORMATION (RFI) SYSTEM
1.13 PROGRESS PHOTOGRAPHS
1.14 CLEANUP
1.15 RESTORATION OF STORAGE AREA

PART 2 PRODUCTS (NOT APPLICABLE)

PART 3 EXECUTION (NOT APPLICABLE)

-- End of Section Table of Contents --

CEGS-01500/S (February 1997)

SECTION 01500

TEMPORARY CONSTRUCTION FACILITIES
02/97

PART 1 GENERAL

1.1 GENERAL REQUIREMENTS

1.1.1 Site Plan

The Contractor shall prepare a site plan indicating the proposed location and dimensions of any area to be fenced and used by the Contractor, the number of trailers to be used, avenues of ingress/egress to the fenced area and details of the fence installation. Any areas which may have to be graveled to prevent the tracking of mud shall also be identified. The Contractor shall also indicate if the use of a supplemental or other staging area is desired.

1.1.2 Identification of Employees

The Contractor shall be responsible for furnishing to each employee, and for requiring each employee engaged on the work to display, identification as approved and directed by the Contracting Officer. Prescribed identification shall immediately be delivered to the Contracting Officer for cancellation upon release of any employee. When required, the Contractor shall obtain and provide fingerprints of persons employed on the project. Contractor and subcontractor personnel shall wear identifying markings on hard hats clearly identifying the company for whom the employee works.

1.1.3 Employee Parking

Contractor employees shall park privately owned vehicles in an area designated by the Contracting Officer. This area will be within reasonable walking distance of the construction site. Contractor employee parking shall not interfere with existing and established parking requirements of the military installation.

1.2 AVAILABILITY AND USE OF UTILITY SERVICES

1.2.1 Payment for Utility Services

The Government will make all reasonably required utilities available to the Contractor from existing outlets and supplies, as specified in the contract. Unless otherwise provided in the contract, the amount of each utility service consumed shall be charged to or paid for by the Contractor at prevailing rates charged to the Government or, where the utility is produced by the Government, at reasonable rates determined by the Contracting Officer. The Contractor shall carefully conserve any utilities furnished without charge.

1.2.2 Meters and Temporary Connections

The Contractor, at its expense and in a manner satisfactory to the Contracting Officer, shall provide and maintain necessary temporary

connections, distribution lines, and meter bases (Government will provide meters) required to measure the amount of each utility used for the purpose of determining charges. The Contractor shall notify the Contracting Officer, in writing, 5 working days before final electrical connection is desired so that a utilities contract can be established. The Government will provide a meter and make the final hot connection after inspection and approval of the Contractor's temporary wiring installation. The Contractor shall not make the final electrical connection.

1.2.3 Advance Deposit

An advance deposit for utilities consisting of an estimated month's usage or a minimum of $50.00 will be required. The last monthly bills for the fiscal year will normally be offset by the deposit and adjustments will be billed or returned as appropriate. Services to be rendered for the next fiscal year, beginning 1 October, will require a new deposit. Notification of the due date for this deposit will be mailed to the Contractor prior to the end of the current fiscal year.

1.2.4 Final Meter Reading

Before completion of the work and final acceptance of the work by the Government, the Contractor shall notify the Contracting Officer, in writing, 5 working days before termination is desired. The Government will take a final meter reading, disconnect service, and remove the meters. The Contractor shall then remove all the temporary distribution lines, meter bases, and associated paraphernalia. The Contractor shall pay all outstanding utility bills before final acceptance of the work by the Government.

1.2.5 Sanitation

The Contractor shall provide and maintain within the construction area minimum field-type sanitary facilities approved by the Contracting Officer. Government toilet facilities will not be available to Contractor's personnel.

1.2.6 Telephone

The Contractor shall make arrangements and pay all costs for telephone facilities desired.

1.3 BULLETIN BOARD, PROJECT SIGN, AND PROJECT SAFETY SIGN

1.3.1 Bulletin Board

Immediately upon beginning of work, the Contractor shall provide a weatherproof glass-covered bulletin board not less than 36 by 48 inches in size for displaying the Equal Employment Opportunity poster, a copy of the wage decision contained in the contract, Wage Rate Information poster, and other information approved by the Contracting Officer. The bulletin board shall be located at the project site in a conspicuous place easily accessible to all employees, as approved by the Contracting Officer. Legible copies of the aforementioned data shall be displayed until work is completed. Upon completion of work the bulletin board shall be removed by and remain the property of the Contractor.

1.3.2 Project Signs

The Contractor shall furnish and erect a project sign in the location as selected by the Contracting Officer. Details of construction shall be as shown on sketches included in Attachment 1 to Section 00800. The sign shall be constructed of 1/2 inch thick (or metric equivalent), grade A-C, exterior type plywood. The sign shall receive one coat primer paint followed by two coats brown color paint in accordance with Fed. Std. 595a, Color No. 20100 semigloss exterior type enamel. Lettering must be white gloss exterior type enamel (Fed. Std. 595a, Color No. 37875). Windows and door of the Castle and logo background shall be painted white (Fed. Std. 595a, Color No. 37875). The Castle and inner border line shall be brown (Fed. Std. 595a, Color No. 20100). Upon completion of work under this contract, the project sign shall be removed from the job site and shall remain the property of the Contractor.

The Engineering and Services Directorate emblem (AFVA 85-3) may be acquired by sending a letter; a completed DD Form 1149, Requisition and Invoice/Shipping Document; or a DA Form 17, Requisition for Publications (Army customers) to:

The Air Force Publishing Distribution Center
2800 Eastern Boulevard
Baltimore, MD 21220-2898

1.4 PROTECTION AND MAINTENANCE OF TRAFFIC

During construction the Contractor shall provide access and temporary relocated roads as necessary to maintain traffic. The Contractor shall maintain and protect traffic on all affected roads during the construction period except as otherwise specifically directed by the Contracting Officer. Measures for the protection and diversion of traffic, including the provision of watchmen and flagmen, erection of barricades, placing of lights around and in front of equipment and the work, and the erection and maintenance of adequate warning, danger, and direction signs, shall be as required by the State and local authorities having jurisdiction. The traveling public shall be protected from damage to person and property. The Contractor's traffic on roads selected for hauling material to and from the site shall interfere as little as possible with public traffic. The Contractor shall investigate the adequacy of existing roads and the allowable load limit on these roads. The Contractor shall be responsible for the repair of any damage to roads caused by construction operations.

All commercial vehicles larger than a pickup to include panel vans with no side or rear windows are to enter Pope AFB, NC, through one of two locations (Knox Street or Longstreet Road) on Fort Bragg, NC, where the vehicles will be "scanned." Entry gates on Pope AFB will be Armistead and Reilly Road.

1.4.1 Haul Roads

The Contractor will be required to use the haul routes shown on the plans unless otherwise permitted in writing by the Contracting Officer. When haul routes are not designated on the plans, the Contractor must obtain approval of the Contracting Officer of haul routes he intends to use. The Contractor shall maintain the haul routes and shall keep the dust problem under control by wetting the surface as needed. Sweeping and cleaning of pavements will be done as necessary to remove spillage resulting from the hauling operations. After all hauling has been completed, the Contractor shall restore the earth areas used for the haul routes to original condition by final grading, shaping, compacting, and grassing, and shall

clean and sweep all paved areas as required. Any pavement damaged as a result of hauling operations under this contract for both the earth and other materials shall be promptly repaired by the Contractor, as approved by the Contracting Officer. The cost of maintenance and repair of the haul routes, as mentioned above, shall be considered as a subsidiary obligation of the Contractor. The axle load of earth hauling equipment operating on paved streets shall not exceed 18,000 pounds.

1.4.2 Barricades

The Contractor shall erect and maintain temporary barricades to limit public access to hazardous areas. Such barricades shall be required whenever safe public access to paved areas such as roads, parking areas or sidewalks is prevented by construction activities or as otherwise necessary to ensure the safety of both pedestrian and vehicular traffic. Barricades shall be securely placed, clearly visible with adequate illumination to provide sufficient visual warning of the hazard during both day and night.

1.5 CONTRACTOR'S TEMPORARY FACILITIES

1.5.1 Administrative Field Offices

The Contractor shall provide and maintain administrative field office facilities within the construction area at the designated site. Government office and warehouse facilities will not be available to the Contractor's personnel.

1.5.2 Storage Area

The Contractor shall construct a temporary 6 foot high chain link fence around trailers and materials. The fence shall include plastic strip inserts, colored brown, so that visibility through the fence is obstructed. Fence posts may be driven, in lieu of concrete bases, where soil conditions permit. Trailers, materials, or equipment shall not be placed or stored outside the fenced area unless such trailers, materials, or equipment are assigned a separate and distinct storage area by the Contracting Officer away from the vicinity of the construction site but within the military boundaries. Trailers, equipment, or materials shall not be open to public view with the exception of those items which are in support of ongoing work on any given day. Materials shall not be stockpiled outside the fence in preparation for the next day's work. Mobile equipment, such as tractors, wheeled lifting equipment, cranes, trucks, and like equipment, shall be parked within the fenced area at the end of each work day.

1.5.3 Supplemental Storage Area

Upon Contractor's request, the Contracting Officer will designate another or supplemental area for the Contractor's use and storage of trailers, equipment, and materials. This area may not be in close proximity of the construction site but shall be within the military boundaries. Fencing of materials or equipment will not be required at this site; however, the Contractor shall be responsible for cleanliness and orderliness of the area used and for the security of any material or equipment stored in this area. Utilities will not be provided to this area by the Government.

1.5.4 Appearance of Trailers

Trailers utilized by the Contractor for administrative or material storage

purposes shall present a clean and neat exterior appearance and shall be in a state of good repair. Trailers which, in the opinion of the Contracting Officer, require exterior painting or maintenance will not be allowed on the military property.

1.5.5 Maintenance of Storage Area

Fencing shall be kept in a state of good repair and proper alignment. Should the Contractor elect to traverse, with construction equipment or other vehicles, grassed or unpaved areas which are not established roadways, such areas shall be covered with a layer of gravel as necessary to prevent rutting and the tracking of mud onto paved or established roadways; gravel gradation shall be at the Contractor's discretion. Grass located within the boundaries of the construction site shall be mowed for the duration of the project. Grass and vegetation along fences, buildings, under trailers, and in areas not accessible to mowers shall be edged or trimmed neatly.

1.5.6 New Building

In the event a new building is constructed for the temporary project field office, it shall be a minimum 12 feet in width, 16 feet in length and have a minimum of 7 feet headroom. It shall be equipped with approved electrical wiring, at least one double convenience outlet and the required switches and fuses to provide 110-120 volt power. It shall be provided with a work table with stool, desk with chair, two additional chairs, and one legal size file cabinet that can be locked. The building shall be waterproof, shall be supplied with heater, shall have a minimum of two doors, electric lights, a telephone, a battery operated smoke detector alarm, a sufficient number of adjustable windows for adequate light and ventilation, and a supply of approved drinking water. Approved sanitary facilities shall be furnished. The windows and doors shall be screened and the doors provided with dead bolt type locking devices or a padlock and heavy duty hasp bolted to the door. Door hinge pins shall be non-removable. The windows shall be arranged to open and to be securely fastened from the inside. Glass panels in windows shall be protected by bars or heavy mesh screens to prevent easy access to the building through these panels. In warm weather, air conditioning capable of maintaining the office at 50 percent relative humidity and a room temperature 20 degrees F below the outside temperature when the outside temperature is 95 degrees F, shall be furnished. Any new building erected for a temporary field office shall be maintained by the Contractor during the life of the contract and upon completion and acceptance of the work shall become the property of the Contractor and shall be removed from the site. All charges for telephone service for the temporary field office shall be borne by the Contractor, including long distance charges up to a maximum of $75.00 per month.

1.5.7 Security Provisions

Adequate outside security lighting shall be provided at the Contractor's temporary facilities. The Contractor shall be responsible for the security of its own equipment; in addition, the Contractor shall notify the appropriate law enforcement agency requesting periodic security checks of the temporary project field office.

1.6 PLANT COMMUNICATION

Whenever the Contractor has the individual elements of its plant so located that operation by normal voice between these elements is not satisfactory,

the Contractor shall install a satisfactory means of communication, such as telephone or other suitable devices. The devices shall be made available for use by Government personnel.

1.7 TEMPORARY PROJECT SAFETY FENCING

As soon as practicable, but not later than 15 days after the date established for commencement of work, the Contractor shall furnish and erect temporary project safety fencing at the work site. The safety fencing shall be a high visibility brown chain link fence, a minimum of 42 inches high, supported and tightly secured to steel posts located on maximum 10-foot centers, constructed at the approved location. The safety fencing shall be maintained by the Contractor during the life of the contract and, upon completion and acceptance of the work, shall become the property of the Contractor and shall be removed from the work site.

1.8 PARTNERING

Following contract award, the Government intends to propose a voluntary partnering relationship with the Contractor. This partnering relationship will attempt to draw on strengths of each organization to facilitate communications and minimize delays to achieve a quality product, within budget, and on schedule. Participation in such partnering activities may include attendance at coordination meetings and cooperation in other efforts to promote the partnering relationship. The Government and the Contractor will each bear their own costs for participation in the partnering relationship, with no change in the contract price. Participation will not result in any change in the terms or price of the contract.

1.9 INSTALLATION REGULATIONS

The employees of the Contractor will be required to abide by all installation regulations as published by the Commanding Officer. A copy of these regulations can be obtained from the Area/Resident Engineer at the installation. All costs in connection therewith shall be included in the contract price for the work.

1.10 TESTING LABORATORIES

Testing is required to be performed by the Contractor as part of his Quality Control Program to verify contract compliance. This Quality Control Testing is to be conducted by a project or commercial laboratory which has been found adequate and qualified by a Corps of Engineers Division Laboratory Inspection Team.

1.10.1 Approved Testing Laboratories

A composite listing of approved testing laboratories within the Savannah District is available upon request. The Contractor should engage the services of a laboratory contained in the composite list. Contractors may obtain the list by calling (678) 354-0310. Fax requests can be made to number (678) 354-0330.

1.10.2 Other Laboratory Services

The Contractor may engage the services of a laboratory other than those approved by Corps of Engineers District Laboratory Inspection Team if they comply with the following:

a. The Contractor identifies and proposes the unapproved laboratory a minimum of 90 days prior to the start of testing. This time is necessary to allow for scheduling an inspection by a Corps of Engineers District Laboratory team. The time for Government inspection will not be the basis for an increase in the contract performance period.

b. All costs of Government inspection shall be the responsibility of the Contractor.

c. The Contractor may request Government inspection and approval prior to award by forwarding a written request to:

US Army Engineer District, Savannah
Environmental and Materials Unit
200 North Cobb Parkway
Building 400, Suite 404
Marietta, GA 30062

1.11 CONSTRUCTION SCHEDULE RESTRAINTS - POPE AFB, NC

1.11.1 Occupancy

The work to be performed is to be accomplished in facilities which will be unoccupied and vacant during the course of construction. It is the intent of these provisions to provide for maximum coordination between construction activities pursuant to this contract and concurrent ongoing routine activities of base personnel. Interference with and inconvenience to the occupants or routine of the facility shall be held to an absolute minimum.

1.11.2 Protection

Contractor is responsible to provide such covering, shields and barricades as are required to protect building occupants, equipment, stores, supplies, etc., from dust, debris, weather intrusion, water, moisture or other cause of damage resulting from construction.

1.11.3 Phasing and Sequence

1.11.3.1 General

In addition to the submittals required by clause SCHEDULES FOR CONSTRUCTION CONTRACTS (see SECTION 00700, FAR 52.236-15) the Contractor shall submit for approval a summary work schedule setting forth schedule dates for initiation and completion of construction in each work area. No work shall be performed prior to approval of this schedule and all work shall be performed in strict adherence thereto. If departures from this schedule appear to be required or desired, the Contracting Officer shall be promptly notified and his approval will be required prior to implementation of said departure(s).

1.11.3.2 Special Work Restraints

*3

~~None.~~Refer to Taxiway Phasing Plan in Volume I of solicitation drawings for required sequence of work between various phases.

1.11.4 Time of Performance

1.11.4.1 Work Requiring Access

All work requiring access to building interiors excluding attics, crawl spaces, etc., and all other work shall be performed between 7:30 a.m. and 4 p.m. (normal working hours for base where project is located) excluding official holidays, unless otherwise indicated or approved by the Contracting Officer. Requests to work during other than these normal hours shall be made in writing at least 36 hours in advance. For example, a request to work on a Saturday shall be submitted no later than Thursday at noon.

1.11.4.2 Utility/Building System Outages

1.23.4.2 Work requiring outages of utilities or building systems will be accomplished during normal working hours in accordance with prior approved schedule(s).

1.11.5 Outages

Contractor's work requiring outages of utility systems or building systems will require 2 weeks' advance notice and will be subject to the approval of the Contracting Officer. Notice shall include type of outage, date, and time outage will commence and estimated duration of outage.

1.11.6 Continuity

All tools, labor and materials required to complete any item of work within a given work area or requiring an outage of any building utility or system shall be available at the site prior to commencement thereof. Once work has commenced on an item of work, said work shall be continuously and diligently performed to completion and acceptance. Breaks in work to be negotiated with the Contracting Officers Representative if other then Holidays.

1.11.7 Construction/Site Management for Construction on AMC Installations

1.11.7.1 General

The following criteria describes the standards that must be attained on all construction sites at all Air Mobility Command bases. The criteria relates to the appearance of the construction site during the construction cycle, to temporary administration and storage areas and service facilities as needed for execution and completion of the work.

a. Storage Sites: The Contractor shall be given two sites; the primary construction site and a supplemental storage site. The supplemental storage site may not be in close proximity of the construction site but shall be at a site designated on the drawings or by the base civil engineer at the Preconstruction Conference. The primary construction site will be the location of the construction.

A visually acceptable site is required. A clean, well kept site will ensure proper compliance with the safety and environmental requirements of this contract. Contractor's trailers or storage buildings shall be painted in accordance with the base standards and be kept in a good state of repair. Failure of the Contractor to maintain the trailers or storage building in a good condition will be considered sufficient reason to

require their removal. The Contractor will be responsible for the security of his property and general housekeeping of the area(s).

b. Site Plan: The Contractor shall submit to the Contracting Officer, for approval prior to the start of work, plans showing the layout and details of all temporary facilities to be used for this contract. The plan must be approved by the base civil engineer. The plan, as a minimum, shall include the location and alignment of the safety and construction fences and location of all site trailers, equipment and material storage areas, construction entrances, trash dumpsters, temporary sanitary facilities, and workers' parking areas. If required, photographs of the site prior to the start of work shall be included with the plan. After completion of the work, the Contractor shall remove the facilities from the site and restore the site to the original condition.

c. Dirt/Dust Control Plan: The Contractor shall submit truck and material handling routes and a plan for controlling dirt, debris, and dust from accumulating on base roadways the Contractor uses for any purpose. The plan, as a minimum, shall identify the subcontractor and equipment to be used for cleaning along the haul route roadways and measures to be used to reduce dirt, dust, and debris from roadways.

1.11.7.2 Contractor's Temporary Facilities

a. Administrative Field Offices and Material Storage Trailers: Contractor's administrative field office and storage trailers shall be in new or like new condition and be the base standard color on the exterior (Federal Standard Color FS-23531 or Sherwin Williams SW-1099, Knubby Wool). Trailers will include "skirts" that will prevent storage of material under the trailers. All trailers and other temporary structures used as field offices to house personnel or for storage shall be anchored to the ground in accordance with base standards.

b. Material Storage Area:

(1) Supplemental Storage Area: The Contractor will use this for storage of items not immediately required at the construction site. Contractors will be responsible for the security of their property and general housekeeping of the area.

(2) Primary Storage Area: The storage at the site will be limited to the materials that are needed to be used within 2 weeks. The storage area will be enclosed by a construction fence as described in paragraph Construction Safety Fence.

(3) Dumpsters: Dumpsters shall be equipped with a secure cover, painted Federal Standard Color FS-20059 or Sherwin Williams SW-1049, Belgian Chocolate, and be free of graffiti. The cover shall be closed at all times, except when being loaded with trash and debris. Dumpsters will be located behind the construction fence or out of the public view. Site dumpsters shall be emptied at least a once a week or as needed to keep the site free of debris and trash.

(4) Trash Containers: The trash containers shall be 208 liters (55 gallons) in capacity, painted Federal Standard Color FS-20059 or Sherwin Williams 1049 and free of graffiti. The trash container will be located behind the construction fence or out of the public view. Trash containers shall be emptied at least once a day. The number of trash containers required shall be as needed to keep the site clean as determined by the

Contracting Officer.

(5) Temporary Sanitation Facilities: All temporary sewer/sanitation facilities shall be self-contained units with both urinals and stool capabilities. The units shall be sufficiently ventilated to control odors and fumes and should be emptied and cleaned at least a every week or more often if required by the Contracting Officer. The doors should be self-closing. the exterior of the unit shall be Federal Standard Color FS-23531 or Sherwin Williams SW-1099, Knubby Wool. The facility will be located behind the construction fence or out of the public view.

(6) Construction and Safety Fence: The project work area and Contractor lay-down area shall be enclosed by a 1.8 m (6-foot) chain link fence with brown, UV light-resistant, plastic fabric mesh netting (similar to tennis court screening) and gates. Upon completion and acceptance of the work, the construction fence shall be removed. Chain link fencing and gates shall be installed in accordance with manufacturer's recommendations.

The Contractor shall provide a temporary safety fence with gates and warning signs at the construction site prior to the start of work to protect members of the pubic from construction activities. The safety fence will enclose those areas not within the construction fence. The construction fence may be used in lieu of a safety fence. The safety fence shall be dark brown color (or bright orange where it protects excavated areas), high density polyethylene grid or approved equal, a minimum of 1.1m (432 inches) high, supported and tightly secured to steel posts located on minimum 3 m (10-foot) centers. The safety fence shall be maintained by the Contractor during the life of the contract, and upon completion and acceptance of the work, shall remain the property of the Contractor and shall be removed from the work site.

(7) Grass Cutting: Any grass (or annual grass) within the construction and storage sites shall be cut to a 2-inch height at least once a week during the growing season. The grass around the fences shall be trimmed at time of grass cutting to keep a neat appearance. If a construction or safety fence is not used for a specific reason approved by the base civil engineering representative then any grass or annual weeds within the construction area shall be maintained in a similar fashion as previously described. Grass or weeds growing on stockpiled earth shall be maintained as described above.

1.12 REQUEST FOR INFORMATION (RFI) SYSTEM

The Government has developed an electronic database, the Request for Information (RFI) System, to track and answer Contractor questions, requests for information and clarifications during construction. The use of the RFI System for all requests (the Contractor's as well as the subcontractors'/suppliers') is a contractual requirement for this project. The Contractor will enter the system over the Internet using a WEB browser such as Internet Explorer 5.0 or newer or Netscape 4.7 or newer and any Internet service provider. The Government will provide the Contractor a user identification and password for the system that will only allow the Contractor to enter and view the requests for this project. The Contractor will provide the Government the E-mail address for the individual(s) inputting into the system in order that E-mail messages can be sent from the Government to the Contractor indicating a response to the request. The Government will provide instructions in the use of the RFI system. The Contractor must fill in seven fields in the Contractor Data portion of the RFI form, which include Date Required, Priority, Short Description, Problem

Description, Recommended Action, Cost, and Time. The Government will be notified through an E-mail message that the Contractor has entered a request into the system. When the Government has answered the request, an E-mail message will be sent informing the Contractor that the answer to the request is in the system. The Contractor will enter the system to retrieve the answer using the same procedure to enter the question. The RFI System assigns a unique number to each request. The Contractor will not be reimbursed separately for the required use of this system. The Contractor shall include any costs associated with the use of this system into their bid.

1.13 PROGRESS PHOTOGRAPHS

The Contractor shall, during the progress of the project, furnish the Contracting Officer progress photographs in color prints and in digital format to depict progress of construction. The photographic work shall be performed by a qualified, established, commercial photographer. The photographs and slides shall be taken between the 1st and 5th day of each month and be delivered to the Contracting Officer not later than the 20th day of the same month taken. The photographs shall be taken from not less than six positions for each month as selected by the Contracting Officer. They shall show, inasmuch as practicable, work accomplished during the previous month. The photographs shall be 8-inch by 10-inch color glossy prints and in digital format approved by the Contracting Officer. Each photograph shall be identified showing date made, contract title and number and a brief description of work depicted and shall be sequentially numbered. The identifying data shall be placed on the back of the prints. Slides shall have a number placed on the frame corresponding to the appropriate identified print, the name of the project, the date and a brief description of work depicted. No identifying data shall appear on the face of prints or in the viewing area of slides. One copy of each photograph and the corresponding negative and slide shall be furnished to the Contracting Officer by the time stipulated above. No separate payment will be made for these services and all costs in connection therewith shall be considered incidental to costs of the overall project.

1.14 CLEANUP

Construction debris, waste materials, packaging material and the like shall be removed from the work site daily. Any dirt or mud which is tracked onto paved or surfaced roadways shall be cleaned away. Materials resulting from demolition activities which are salvageable shall be stored within the fenced area described above or at the supplemental storage area. Stored material not in trailers, whether new or salvaged, shall be neatly stacked when stored.

1.15 RESTORATION OF STORAGE AREA

Upon completion of the project and after removal of trailers, materials, and equipment from within the fenced area, the fence shall be removed and will become the property of the Contractor. Areas used by the Contractor for the storage of equipment or material, or other use, shall be restored to the original or better condition. Gravel used to traverse grassed areas shall be removed and the area restored to its original condition, including top soil and seeding as necessary.

PART 2 PRODUCTS (NOT APPLICABLE)
PART 3 EXECUTION (NOT APPLICABLE) -- End of Section --

SECTION TABLE OF CONTENTS

DIVISION 01 - GENERAL REQUIREMENTS

SECTION 01670

RECYCLED / RECOVERED MATERIALS

12/01

PART 1 GENERAL

1.1 REFERENCES
1.2 OBJECTIVES
1.3 EPA DESIGNATED ITEMS INCORPORATED IN THE WORK
1.4 EPA PROPOSED ITEMS INCORPORATED IN THE WORK
1.5 EPA LISTED ITEMS USED IN CONDUCT OF THE WORK BUT NOT INCORPORATED IN THE WORK

-- End of Section Table of Contents --

SECTION 01670

RECYCLED / RECOVERED MATERIALS

12/01

PART 1 GENERAL

1.1 REFERENCES

The publications listed below form a part of this specification to the extent referenced. The publications are referred to in the text by basic designation only.

U.S. NATIONAL ARCHIVES AND RECORDS ADMINISTRATION (NARA)

40 CFR 247	Comprehensive Procurement Guideline for Products Containing Recovered Materials

1.2 OBJECTIVES

Government procurement policy is to acquire, in a cost effective manner, items containing the highest percentage of recycled and recovered materials practicable consistent with maintaining a satisfactory level of competition without adversely affecting performance requirements or exposing suppliers' employees to undue hazards from the recovered materials. The Environmental Protection Agency (EPA) has designated certain items which must contain a specified percent range of recovered or recycled materials. EPA designated products specified in this contract comply with the stated policy and with the EPA guidelines. The Contractor shall make all reasonable efforts to use recycled and recovered materials in providing the EPA designated products and in otherwise utilizing recycled and recovered materials in the execution of the work.

1.3 EPA DESIGNATED ITEMS INCORPORATED IN THE WORK

Various sections of the specifications contain requirements for materials that have been designated by EPA as being products which are or can be made with recovered or recycled materials. These items, when incorporated into the work under this contract, shall contain at least the specified percentage of recycled or recovered materials unless adequate justification (non-availability) for non-use is provided. When a designated item is specified as an option to a non-designated item, the designated item requirements apply only if the designated item is used in the work.

1.4 EPA PROPOSED ITEMS INCORPORATED IN THE WORK

Products other than those designated by EPA are still being researched and are being considered for future Comprehensive Procurement Guideline (CPG) designation. It is recommended that these items, when incorporated in the work under this contract, contain the highest practicable percentage of recycled or recovered materials, provided specified requirements are also met.

1.5 EPA LISTED ITEMS USED IN CONDUCT OF THE WORK BUT NOT INCORPORATED IN

THE WORK

There are many products listed in 40 CFR 247 which have been designated or proposed by EPA to include recycled or recovered materials that may be used by the Contractor in performing the work but will not be incorporated into the work. These products include office products, temporary traffic control products, and pallets. It is recommended that these non-construction products, when used in the conduct of the work, contain the highest practicable percentage of recycled or recovered materials and that these products be recycled when no longer needed.

-- End of Section --

SECTION TABLE OF CONTENTS

DIVISION 01 - GENERAL REQUIREMENTS

SECTION 01780A

CLOSEOUT SUBMITTALS

05/02

PART 1 GENERAL

1.1 SUBMITTALS
1.2 PROJECT RECORD DOCUMENTS
1.2.1 As-Built Drawings
1.2.1.1 Government Furnished Materials
1.2.1.2 Working As-Built and Final As-Built Drawings
1.2.1.3 Drawing Preparation
1.2.1.4 Computer Aided Design and Drafting (CADD) Drawings
1.2.1.5 Omitted
1.2.1.6 Payment
1.2.2 As-Built Record of Equipment and Materials
1.2.3 Final Approved Shop Drawings
1.2.4 Construction Contract Specifications
1.2.5 Real Property Equipment
1.3 WARRANTY MANAGEMENT
1.3.1 Warranty Management Plan
1.3.2 Performance Bond
1.3.3 Pre-Warranty Conference
1.3.4 Contractor's Response to Construction Warranty Service Requirements
1.3.5 Warranty Tags
1.4 MECHANICAL TESTING, ADJUSTING, BALANCING, AND COMMISSIONING
1.5 OPERATION AND MAINTENANCE MANUALS
1.6 FINAL CLEANING

PART 2 PRODUCTS (NOT USED)

PART 3 EXECUTION (NOT USED)

-- End of Section Table of Contents --

UFGS-01780A/S (May 2002)

SECTION 01780A

CLOSEOUT SUBMITTALS
05/02

PART 1 GENERAL

1.1 SUBMITTALS

Government approval is required for submittals with a "G" designation; submittals not having a "G" designation are for information only. When used, a designation following the "G" designation identifies the office that will review the submittal for the Government. The following shall be submitted in accordance with Section 01330 SUBMITTAL PROCEDURES:

SD-02 Shop Drawings

As-Built Drawings; G

Drawings showing final as-built conditions of the project. The final CADD as-built drawings shall consist of one set of electronic CADD drawing files in the specified format, two sets of black-line prints, and one set of the approved working as-built drawings.

SD-03 Product Data

As-Built Record of Equipment and Materials; G

Two copies of the record listing the as-built materials and equipment incorporated into the construction of the project.

Warranty Management Plan; G

Two sets of the warranty management plan containing information relevant to the warranty of materials and equipment incorporated into the construction project, including the starting date of warranty of construction. The Contractor shall furnish with each warranty the name, address, and telephone number of each of the guarantor's representatives nearest to the project location.

Warranty Tags

Two record copies of the warranty tags showing the layout and design.

Final Cleaning

Two copies of the listing of completed final clean-up items.

1.2 PROJECT RECORD DOCUMENTS

1.2.1 As-Built Drawings

This paragraph covers as-built drawings complete, as a requirement of the contract. The terms "drawings," "contract drawings," "drawing files," "working as-built drawings" and "final as-built drawings" refer to contract drawings which are revised to be used for final as-built drawings.

1.2.1.1 Government Furnished Materials

Two sets of paper drawings revised to reflect all bid amendments will be provided by the Government at the preconstruction conference for markup of as-built conditions. Electronic CADD files in Microstation format will be provided by the Government at the preconstruction conference for updating CADD file as-built drawings.

1.2.1.2 Working As-Built and Final As-Built Drawings

The Contractor shall revise two sets of paper drawings by red-line process to show the as-built conditions during the prosecution of the project. These working as-built marked drawings shall be kept current on a weekly basis and at least one set shall be available on the jobsite at all times. Changes from the contract plans which are made in the work or additional information which might be uncovered in the course of construction shall be accurately and neatly recorded as they occur by means of details and notes. Final as-built drawings shall be prepared after the completion of each definable feature of work as listed in the Contractor Quality Control Plan (Foundations, Utilities, Structural Steel, etc., as appropriate for the project). The working as-built marked prints and final as-built drawings will be jointly reviewed for accuracy and completeness by the Contracting Officer and the Contractor prior to submission of each monthly pay estimate. If the Contractor fails to maintain the working and final as-built drawings as specified herein, the Contracting Officer will deduct from the monthly progress payment an amount representing the estimated cost of maintaining the as-built drawings. This monthly deduction will continue until an agreement can be reached between the Contracting Officer and the Contractor regarding the accuracy and completeness of updated drawings. The working and final as-built drawings shall show, but shall not be limited to, the following information:

a. The actual location, kinds and sizes of all sub-surface utility lines. In order that the location of these lines and appurtenances may be determined in the event the surface openings or indicators become covered over or obscured, the as-built drawings shall show, by offset dimensions to two permanently fixed surface features, the end of each run including each change in direction. Valves, splice boxes and similar appurtenances shall be located by dimensioning along the utility run from a reference point. The average depth below the surface of each run shall also be recorded.

b. The location and dimensions of any changes within the building structure.

c. Correct grade, elevations, cross section, or alignment of roads, earthwork, structures or utilities if any changes were made from contract plans.

d. Changes in details of design or additional information obtained from working drawings specified to be prepared and/or furnished by the Contractor; including but not limited to fabrication, erection, installation plans and placing details, pipe sizes, insulation material, dimensions of equipment foundations, etc.

e. The topography, invert elevations and grades of drainage installed or affected as part of the project construction.

f. Changes or modifications which result from the final inspection.

g. Where contract drawings or specifications present options, only the option selected for construction shall be shown on the final as-built prints.

h. If borrow material for this project is from sources on Government property, or if Government property is used as a spoil area, the Contractor shall furnish a contour map of the final borrow pit/spoil area elevations.

i. Systems designed or enhanced by the Contractor, such as HVAC controls, fire alarm, fire sprinkler, and irrigation systems.

j. Modifications (change order price shall include the Contractor's cost to change working and final as-built drawings to reflect modifications) and compliance with the following procedures.

(1) Directions in the modification for posting descriptive changes shall be followed.

(2) A Modification Circle shall be placed at the location of each deletion.

(3) For new details or sections which are added to a drawing, a Modification Circle shall be placed by the detail or section title.

(4) For minor changes, a Modification Circle shall be placed by the area changed on the drawing (each location).

(5) For major changes to a drawing, a Modification Circle shall be placed by the title of the affected plan, section, or detail at each location.

(6) For changes to schedules or drawings, a Modification Circle shall be placed either by the schedule heading or by the change in the schedule.

(7) The Modification Circle size shall be 1/2 inch diameter unless the area where the circle is to be placed is crowded. Smaller size circle shall be used for crowded areas.

1.2.1.3 Drawing Preparation

The as-built drawings shall be modified as may be necessary to correctly show the features of the project as it has been constructed by bringing the contract set into agreement with approved working as-built prints, and adding such additional drawings as may be necessary. These working as-built marked prints shall be neat, legible and accurate. These drawings are part of the permanent records of this project and shall be returned to the Contracting Officer after approval by the Government. Any drawings damaged or lost by the Contractor shall be satisfactorily replaced by the Contractor at no expense to the Government.

1.2.1.4 Computer Aided Design and Drafting (CADD) Drawings

Only personnel proficient in the preparation of CADD drawings shall be employed to modify the contract drawings or prepare additional new drawings. Additions and corrections to the contract drawings shall be equal in quality and detail to that of the originals. Line colors, line weights, lettering, layering conventions, and symbols shall be the same as the original line colors, line weights, lettering, layering conventions, and symbols. If additional drawings are required, they shall be prepared using the specified electronic file format applying the same graphic standards specified for original drawings. The title block and drawing border to be used for any new final as-built drawings shall be identical to that used on the contract drawings. Additions and corrections to the contract drawings shall be accomplished using CADD files. The Contractor will be furnished "as-designed" drawings in Microstation J format compatible with a Windows NT 2000 operating system or Windows XP. The electronic files will be supplied on compact disc, read-only memory (CD-ROM). The Contractor shall be responsible for providing all program files and hardware necessary to prepare final as-built drawings. The Contracting Officer will review final as-built drawings for accuracy and the Contractor shall make required corrections, changes, additions, and deletions.

a. Corrections shall be made in the "Model" files rather than the individual sheet file when model files are referenced. Once the model file is corrected the individual sheet file will automatically be corrected.

b. The contractor shall modify the drawings at construction completion to indicate the as-built character of all site components:

(1) These drawings will conform to the level symbology of the model files and be free of any superfluous construction detail. The intent is to show As-Built conditions and should not include any components that are not as-built, i.e., if the pre-work map showed a water line 3' from a curb and was constructed 4' from the curb, the as-built map will show only the final location of the water line.

(2) The grading model file will clearly indicate the final grade of the site at a contour interval not greater than one foot.

(3) The final inverts of all utilities will be shown on the model files. Where utilities were installed which follow the surface of the ground, the depth of that utility will be indicated. Where there is a variance in the depth of the utility, the break point and character of variance will be shown.

(4) The model files will clearly identify all utilities installed with a trace wire and/or cathodic protection.

(5) The model files will show a minimum of two tie points for all subsurface control devices to include valves, manholes, handholes, switches, etc. The tie-points will be directed such that they form a triangle with no inclusive angle less than 30° or greater than 150°. No leg of the triangle will be longer than 100'. Valid tie-points will run to identifiable above ground objects such as poles or building corners as is in keeping of good survey practice for the recovery of monuments.

(6) The model files will clearly indicate the entry point and character of all utilities running to or from structures.

c. When final revisions have been completed, the cover sheet drawing shall show the wording "RECORD DRAWING AS-BUILT" followed by the name of the Contractor in letters at least 3/16 inch high. All other contract drawings shall be marked either "AS-Built" drawing denoting no revisions on the sheet or "Revised As-Built" denoting one or more revisions. Original contract drawings shall be dated in the revision block.

d. Within 10 days for contracts less than $5 million or 20 days for contracts $5 million and above after Government approval of all of the working as-built drawings for a phase of work, the Contractor shall prepare the final CADD as-built drawings for that phase of work and submit two sets of blue-lined prints of these drawings for Government review and approval. The Government will promptly return one set of prints annotated with any necessary corrections. Within 7 days for contracts less than $5 million or 10 days for contracts $5 million and above the Contractor shall revise the CADD files accordingly at no additional cost and submit one set of final prints for the completed phase of work to the Government. Within 10 days for contracts less than $5 million or 20 days for contracts $5 million and above of substantial completion of all phases of work, the Contractor shall submit the final as-built drawing package for the entire project. The submittal shall consist of one set of electronic files on compact disc, read-only memory (CD-ROM), two sets of blue-line prints and one set of the approved working as-built drawings. They shall be complete in all details and identical in form and function to the contract drawing files supplied by the Government. Any transactions or adjustments necessary to accomplish this is the responsibility of the Contractor. The Government reserves the right to reject any drawing files it deems incompatible with the customer's CADD system. Paper prints, drawing files and storage media submitted will become the property of the Government upon final approval. Failure to submit final as-built drawing files and marked prints as specified shall be cause for withholding any payment due the Contractor under this contract. Approval and acceptance of final as-built drawings shall be accomplished before final payment is made to the Contractor.

1.2.1.5 Omitted

1.2.1.6 Payment

No separate payment will be made for as-built drawings required under this contract, and all costs accrued in connection with such drawings shall be considered a subsidiary obligation of the Contractor.

1.2.2 As-Built Record of Equipment and Materials

The Contractor shall furnish one copy of preliminary record of equipment and materials used on the project 15 days prior to final inspection. This preliminary submittal will be reviewed and returned 2 days after final inspection with Government comments. Two sets of final record of equipment and materials shall be submitted 10 days after final inspection. The designations shall be keyed to the related area depicted on the contract drawings. The record shall list the following data:

RECORD OF DESIGNATED EQUIPMENT AND MATERIALS DATA

Description	Specification Section	Manufacturer and Catalog, Model, and Serial Number	Composition and Size	Where Used

RECORD OF DESIGNATED EQUIPMENT AND MATERIALS DATA

1.2.3 Final Approved Shop Drawings

The Contractor shall furnish final approved project shop drawings 30 days after transfer of the completed facility.

1.2.4 Construction Contract Specifications

The Contractor shall furnish final as-built construction contract specifications, including modifications thereto, 30 days after transfer of the completed facility.

1.2.5 Real Property Equipment

The Contractor shall furnish a list of installed equipment furnished under this contract. The list shall include all information usually listed on manufacturer's name plate. The "EQUIPMENT-IN-PLACE LIST" shall include, as applicable, the following for each piece of equipment installed: description of item, location (by room number), model number, serial number, capacity, name and address of manufacturer, name and address of equipment supplier, condition, spare parts list, manufacturer's catalog, and warranty. A draft list shall be furnished at time of transfer. The final list shall be furnished 30 days after transfer of the completed facility.

1.3 WARRANTY MANAGEMENT

1.3.1 Warranty Management Plan

The Contractor shall develop a warranty management plan which shall contain information relevant to the clause Warranty of Construction in Section 00800. At least 30 days before the planned pre-warranty conference, the Contractor shall submit the warranty management plan for Government approval. The warranty management plan shall include all required actions and documents to assure that the Government receives all warranties to which it is entitled. The plan shall be in narrative form and contain sufficient detail to render it suitable for use by future maintenance and repair personnel, whether tradesmen, or of engineering background, not necessarily familiar with this contract. The term "status" as indicated below shall include due date and whether item has been submitted or was accomplished. Warranty information made available during the construction phase shall be submitted to the Contracting Officer for approval prior to each monthly pay estimate. Approved information shall be assembled in a binder and shall be turned over to the Government upon acceptance of the work. The construction warranty period shall begin on the date of project acceptance and shall continue for the full product warranty period. A joint 4 month and 9 month warranty inspection shall be conducted, measured from time of acceptance, by the Contractor, Contracting Officer and the Customer Representative. Information contained in the warranty management plan shall include, but shall not be limited to, the following:

a. Roles and responsibilities of all personnel associated with the warranty process, including points of contact and telephone numbers within the organizations of the Contractors, subcontractors, manufacturers or suppliers involved.

b. Listing and status of delivery of all Certificates of Warranty for

extended warranty items, to include roofs, HVAC balancing, pumps, motors, transformers, and for all commissioned systems such as fire protection and alarm systems, sprinkler systems, lightning protection systems, etc.

c. A list for each warranted equipment, item, feature of construction or system indicating:

(1) Name of item.
(2) Model and serial numbers.
(3) Location where installed.
(4) Name and phone numbers of manufacturers or suppliers.
(5) Names, addresses and telephone numbers of sources of spare parts.
(6) Warranties and terms of warranty. This shall include one-year overall warranty of construction. Items which have extended warranties shall be indicated with separate warranty expiration dates.
(7) Cross-reference to warranty certificates as applicable.
(8) Starting point and duration of warranty period.
(9) Summary of maintenance procedures required to continue the warranty in force.
(10) Cross-reference to specific pertinent Operation and Maintenance manuals.
(11) Organization, names and phone numbers of persons to call for warranty service.
(12) Typical response time and repair time expected for various warranted equipment.

d. The Contractor's plans for attendance at the 4 and 9 month post-construction warranty inspections conducted by the Government.

e. Procedure and status of tagging of all equipment covered by extended warranties.

f. Copies of instructions to be posted near selected pieces of equipment where operation is critical for warranty and/or safety reasons.

1.3.2 Performance Bond

The Contractor's performance bond shall remain effective throughout the construction period.

a. In the event the Contractor fails to commence and diligently pursue any construction warranty work required, the Contracting Officer will have the work performed by others, and after completion of the work, will charge the remaining construction warranty funds of expenses incurred by the Government while performing the work, including, but not limited to administrative expenses.

b. In the event sufficient funds are not available to cover the construction warranty work performed by the Government at the Contractor's expense, the Contracting Officer will have the right to recoup expenses from the bonding company.

c. Following oral or written notification of required construction warranty repair work, the Contractor shall respond in a timely manner. Written verification will follow oral instructions. Failure of the Contractor to respond will be cause for the Contracting Officer to proceed against the Contractor.

1.3.3 Pre-Warranty Conference

Prior to contract completion, and at a time designated by the Contracting Officer, the Contractor shall meet with the Contracting Officer to develop a mutual understanding with respect to the requirements of this section. Communication procedures for Contractor notification of construction warranty defects, priorities with respect to the type of defect, reasonable time required for Contractor response, and other details deemed necessary by the Contracting Officer for the execution of the construction warranty shall be established/reviewed at this meeting. In connection with these requirements and at the time of the Contractor's quality control completion inspection, the Contractor shall furnish the name, telephone number and address of a licensed and bonded company which is authorized to initiate and pursue construction warranty work action on behalf of the Contractor. This point of contact will be located within the local service area of the warranted construction, shall be continuously available, and shall be responsive to Government inquiry on warranty work action and status. This requirement does not relieve the Contractor of any of its responsibilities in connection with other portions of this provision.

1.3.4 Contractor's Response to Construction Warranty Service Requirements

Following oral or written notification by the Contracting Officer, the Contractor shall respond to construction warranty service requirements in accordance with the "Construction Warranty Service Priority List" and the three categories of priorities listed below. The Contractor shall submit a report on any warranty item that has been repaired during the warranty period. The report shall include the cause of the problem, date reported, corrective action taken, and when the repair was completed. If the Contractor does not perform the construction warranty within the timeframes specified, the Government will perform the work and backcharge the construction warranty payment item established.

a. First Priority Code 1. Perform onsite inspection to evaluate situation, and determine course of action within 4 hours, initiate work within 6 hours and work continuously to completion or relief.

b. Second Priority Code 2. Perform onsite inspection to evaluate situation, and determine course of action within 8 hours, initiate work within 24 hours and work continuously to completion or relief.

c. Third Priority Code 3. All other work to be initiated within 3 work days and work continuously to completion or relief.

d. The "Construction Warranty Service Priority List" is as follows:

Code 1-Air Conditioning Systems
(1) Recreational support.
(2) Air conditioning leak in part of building, if causing damage.
(3) Air conditioning system not cooling properly.

Code 1-Doors
(1) Overhead doors not operational, causing a security, fire, or safety problem.
(2) Interior, exterior personnel doors or hardware, not functioning properly, causing a security, fire, or safety problem.

Code 3-Doors

(1) Overhead doors not operational.
(2) Interior/exterior personnel doors or hardware not functioning properly.

Code 1-Electrical
(1) Power failure (entire area or any building operational after 1600 hours).
(2) Security lights
(3) Smoke detectors

Code 2-Electrical
(1) Power failure (no power to a room or part of building).
(2) Receptacle and lights (in a room or part of building).

Code 3-Electrical
Street lights.

Code 1-Gas
(1) Leaks and breaks.
(2) No gas to family housing unit or cantonment area.

Code 1-Heat
(1). Area power failure affecting heat.
(2). Heater in unit not working.

Code 2-Kitchen Equipment
(1) Dishwasher not operating properly.
(2) All other equipment hampering preparation of a meal.

Code 1-Plumbing
(1) Hot water heater failure.
(2) Leaking water supply pipes.

Code 2-Plumbing
(1) Flush valves not operating properly.
(2) Fixture drain, supply line to commode, or any water pipe leaking.
(3) Commode leaking at base.

Code 3 -Plumbing
Leaky faucets.

Code 3-Interior
(1) Floors damaged.
(2) Paint chipping or peeling.
(3) Casework.

Code 1-Roof Leaks
Temporary repairs will be made where major damage to property is occurring.

Code 2-Roof Leaks
Where major damage to property is not occurring, check for location of leak during rain and complete repairs on a Code 2 basis.

Code 2-Water (Exterior)
No water to facility.

Code 2-Water (Hot)

No hot water in portion of building listed.

Code 3-All other work not listed above.

1.3.5 Warranty Tags

At the time of installation, each warranted item shall be tagged with a durable, oil and water resistant tag approved by the Contracting Officer. Each tag shall be attached with a copper wire and shall be sprayed with a silicone waterproof coating. The date of acceptance and the QC signature shall remain blank until project is accepted for beneficial occupancy. The tag shall show the following information.

a. Type of product/material_____.

b. Model number_____.

c. Serial number_____.

d. Contract number_____.

e. Warranty period_____from_____to_____.

f. Inspector's signature_____.

g. Construction Contractor_____.

Address_____.

Telephone number_____.

h. Warranty contact_____.

Address_____.

Telephone number_____.

i. Warranty response time priority code_____.

j. WARNING - PROJECT PERSONNEL TO PERFORM ONLY OPERATIONAL MAINTENANCE DURING THE WARRANTY PERIOD.

1.4 MECHANICAL TESTING, ADJUSTING, BALANCING, AND COMMISSIONING

Prior to final inspection and transfer of the completed facility; all reports, statements, certificates, and completed checklists for testing, adjusting, balancing, and commissioning of mechanical systems shall be submitted to and approved by the Contracting Officer as specified in applicable technical specification sections.

1.5 OPERATION AND MAINTENANCE MANUALS

Operation manuals and maintenance manuals shall be submitted as specified. Operation manuals and maintenance manuals provided in a common volume shall be clearly differentiated and shall be separately indexed.

1.6 FINAL CLEANING

The premises shall be left broom clean. Stains, foreign substances, and

temporary labels shall be removed from surfaces. Carpet and soft surfaces shall be vacuumed. Equipment and fixtures shall be cleaned to a sanitary condition. Filters of operating equipment shall be replaced. Debris shall be removed from roofs, drainage systems, gutters, downspouts and boot wash areas. Paved areas shall be swept and landscaped areas shall be raked clean. The site shall have waste, surplus materials, and rubbish removed. The project area shall have temporary structures, barricades, project signs, fences and construction facilities removed. A list of completed clean-up items shall be submitted on the day of final inspection.

PART 2 PRODUCTS (NOT USED)

PART 3 EXECUTION (NOT USED)

-- End of Section --

SECTION TABLE OF CONTENTS

DIVISION 02 - SITE WORK

SECTION 02013

ENVIRONMENTAL PROTECTION DURING CONSTRUCTION

04/00

PART 1 GENERAL

1.1 SCOPE
1.2 QUALITY CONTROL
1.3 SUBMITTALS
1.4 IMPLEMENTATION
1.5 SUBCONTRACTORS
1.6 NOTIFICATION
1.7 PROTECTION OF ENVIRONMENTAL RESOURCES
1.7.1 Protection of Land Resources
1.7.1.1 Forest Resources
1.7.1.2 Work Area Limits
1.7.1.3 Protection of Landscape
1.7.1.4 Reduction of Exposure of Unprotected Erodible Soils
1.7.1.5 Erosion and Sedimentation Control Plan
1.7.1.6 Temporary Protection of Disturbed Areas
1.7.1.7 Disposal of Chemical Waste
1.7.1.8 Disposal of Discarded Materials
1.7.2 Preservation and Recovery of Historical, Archaeological, and Cultural Resources
1.7.2.1 Artifacts Discovered During Construction
1.7.2.2 Cultural Resources Protected by Law
1.7.3 Protection of Water Resources
1.7.3.1 Monitoring of Environmental Damage
1.7.4 Protection of Wildlife and Wildlife Habitat
1.7.4.1 Endangered Species Act
1.7.4.2 Red-Cockaded Woodpecker
1.7.4.3 Endangered Plants
1.7.5 Protection of Air Resources
1.7.5.1 Particulates
1.7.5.2 Odors
1.7.5.3 Air Quality
1.7.6 Reduction of Sound Intrusions
1.7.7 Application of Pesticides
1.7.7.1 Licensing and Certification
1.8 POST-CONSTRUCTION CLEANUP
1.9 RESTORATION OF LANDSCAPE DAMAGE
1.10 MAINTENANCE OF POLLUTION CONTROL FACILITIES
1.10.1 Containment Berms
1.10.2 Erosion Control Devices
1.10.3 Storm Drains
1.11 TRAINING OF CONTRACTOR PERSONNEL IN POLLUTION CONTROL

PART 2 PRODUCTS (Not Applicable)

PART 3 EXECUTION (Not Applicable)

-- End of Section Table of Contents --

SAVH-02013 (04/00)

SECTION 02013

ENVIRONMENTAL PROTECTION DURING CONSTRUCTION
04/00

PART 1 GENERAL

1.1 SCOPE

This section covers prevention of environmental pollution and damage to the environment as the result of construction operations under this contract and for those measures set forth in other technical provisions of these specifications. For the purpose of this specification, environmental pollution and damage to the environment is defined as the presence of chemical, physical, or biological elements or agents which adversely affect human health or welfare; unfavorably alter ecological balances of importance to human life; affect other species of importance to man; or degrade the utility of the environment for aesthetic, cultural, and/or historical purposes. The control of environmental pollution and damage requires consideration of the potential effects of an action upon air, water, and land resources, and includes management of visual aesthetics, natural and cultural resources, noise levels, solid waste, hazardous waste, toxic waste, radiant energy, and radioactive materials, as well as other pollutants.

1.2 QUALITY CONTROL

The Contractor shall establish and maintain quality control for environmental protection of all items set forth herein. The Contractor shall record on daily reports any problems in complying with laws, regulations, ordinances, and corrective action taken. The Contractor shall immediately inform the Contracting Officer of any environmental problem.

1.3 SUBMITTALS

Government approval is required for submittals with a "G" designation; submittals not having a "G" designation are for information only. When used, a designation following the "G" designation identifies the office that will review the submittal for the Government. The following shall be submitted in accordance with Section 01330 SUBMITTAL PROCEDURES:

SD-01 Preconstruction Submittals

Environmental Protection Plan; G, RE.

The Contractor shall submit an Environmental Protection Plan which must be approved by the Contracting Officer with input from the PWBC Environmental/Natural Resources Division prior to construction. The plan shall include, but is not limited to, the following:

a. Legal Requirements: A list of Federal, State, and local laws, regulations, and permits concerning environmental protection and pollution control and abatement that are applicable to the Contractor's proposed operations and the requirements imposed by those laws, regulations, and permits shall be included. Whenever there is a conflict between Federal, State, or local laws, regulations, and permit requirements, the more

restrictive provision shall apply.

b. Protection of Features: The Contractor shall prepare a listing of methods to protect resources needing preservation within authorized work areas. These include natural vegetation such as trees, shrubs, vines, grasses, and ground cover; landscape features; air and water quality; fish and wildlife habitat; endangered species; and soil conservation, as well as historical, archaeological, and cultural resources.

c. Environmental Protection Procedures: Procedures to be implemented to provide the required environmental protection and to comply with the applicable laws and regulations shall be included. The Contractor shall set out the procedures to be followed to correct pollution of the environment due to accident, natural causes, or failure to follow the procedures set out in accordance with the Environmental Protection Plan.

Environmental Monitoring Management Plan; G, RE.

The Environmental Protection Plan shall include plans for monitoring environmental compliance for the job site, including land, water, air, noise, hazardous and toxic wastes, and materials and solid waste disposal.

Protection of Land Resources; G, RE.

Plan of protection for land resources as described in paragraph Protection of Land Resources of this specification shall be included.

Protection of Surface and Ground Water; G, RE.

Methods of protecting surface and ground water during construction activities as described in paragraph Protection of Water Resources of this specification shall be included.

Protection of Air Resources; G, RE.

Methods for protecting air resources as described in paragraph Protection of Air Resources of this specification shall be included.

SD-05 Design Data

Design Drawings; G, RE.

Drawings showing locations of any proposed temporary excavations or embankments for haul roads, stream crossings, material storage areas, temporary fuel tanks, sanitary facilities, and stockpiles of excess or spoil materials shall be included.

1.4 IMPLEMENTATION

The Contractor shall submit, in writing, the Environmental Protection Plan to the Contracting Officer within 10 days after receipt of Notice to Proceed. The Contracting Officer shall forward the Contractor's plan to the PWBC Environmental/Natural Resources Division for approval. Approval of the Contractor's plan will not relieve the Contractor of his responsibility for adequate and continuing control of pollutants and other environmental protection measures.

1.5 SUBCONTRACTORS

Assurance that subcontractors comply with the environmental protection requirements of this section will be the responsibility of the prime Contractor.

1.6 NOTIFICATION

The Contracting Officer will notify the Contractor in writing of any observed noncompliance with the aforementioned Federal, State, or local laws or regulations, permits, and other elements of the Contractor's Environmental Protection Plan. The Contractor shall, after receipt of such notice, inform the Contracting Officer of proposed corrective action and implement such action as approved by the PWBC Environmental/Natural Resources Division. If the Contractor fails to comply promptly, the Contracting Officer may issue an order stopping all or part of the work until satisfactory corrective action has been taken. No time extensions shall be granted or costs or damages allowed to the Contractor for any such suspension.

1.7 PROTECTION OF ENVIRONMENTAL RESOURCES

The environmental resources within the project boundaries and those affected outside the limits of permanent work under this contract shall be protected during the entire period of this contract. The Contractor shall confine his activities to areas defined by the drawings and specifications. Environmental protection shall be as stated in the following subparagraphs:

1.7.1 Protection of Land Resources

Prior to the start of any construction, the Contractor shall identify all land resources to be preserved within the Contractor's work area. The Contractor shall not remove, cut, deface, injure, or destroy land resources, including trees, shrubs, vines, grasses, topsoil, and landforms, without special permission from the Contracting Officer. No ropes, cables, or guys shall be fastened or attached to any trees for anchorage unless specifically authorized. Where such special emergency use is permitted, the Contractor shall provide effective protection for land and vegetation resources at all times.

1.7.1.1 Forest Resources

Merchantable timber and pine straw shall neither be cut nor removed from the construction site until it has been assessed by the Savannah District Timber Harvest office in conjunction with PWBC Natural Resources Branch. The Savannah District Timber Harvest office will be given adequate time to arrange for the sale and removal of timber and pine straw. In the event that the Savannah District and Natural Resources Branch determine the amount or quality of timber or pine straw is not merchantable, they will inform the Contracting Officer. The Contracting Officer will authorize the Contractor to remove forest resources which are in the footprint of construction.

1.7.1.2 Work Area Limits

Prior to any construction, the Contractor shall mark the areas that are not required to accomplish all work to be performed under this contract. Isolated areas within the general work area which are to be saved and protected shall also be marked or fenced. Monuments and markers shall be protected before construction operations begin. Where construction operations are to be conducted during darkness, the markers shall still

remain visible. The Contractor shall convey to his personnel the purpose of marking and/or protection of all necessary objects. Damage to protected areas/objects shall be repaired immediately by the Contractor at no additional cost to the Government.

1.7.1.3 Protection of Landscape

Trees, shrubs, grasses, landforms, and other landscape features indicated and defined on the drawings to be preserved shall be clearly identified by marking, fencing, wrapping, or any other approved techniques.

1.7.1.4 Reduction of Exposure of Unprotected Erodible Soils

Earthwork brought to final grade shall be finished as indicated and specified. Side slopes and back slopes shall be protected as soon as practicable upon completion of rough grading. All earthwork shall be planned and conducted to minimize the duration of exposure of unprotected soils. Except in instances where the constructed feature obscures borrow areas, quarries, and waste material areas, these areas shall not initially be cleared in total. Clearing of such areas shall progress in reasonably sized increments as needed to use the areas as approved by the Contracting Officer.

1.7.1.5 Erosion and Sedimentation Control Plan

When the total area of land disturbed is 1 acre or more in size, an Erosion and Sedimentation Control Plan shall be prepared by the Contractor. The plan will be prepared in accordance with North Carolina Administrative Code, Title 15, Department of Natural and Economic Resources, Chapter 4, Sedimentation Control, January 1978. This plan is to be prepared, approved, and filed prior to the start of any land-disturbing activity. When the area to be disturbed is less than 1 acre, a formal plan will not be required; however, erosion and sedimentation control measures will be incorporated as part of the design.

1.7.1.6 Temporary Protection of Disturbed Areas

Such methods as necessary shall be utilized to effectively prevent erosion and control sedimentation at all times including, but not limited to, the following:

a. Control of Runoff: Runoff from the construction site shall be controlled by construction of diversion ditches, benches, and silt basins; by checking dams and berms to reduce the velocity and divert runoff to protected drainage courses; and by any measures required by area-wide plans approved under Paragraph 208 of the Clean Water Act.

b. Sediment Basins: Sediment from construction areas shall be trapped in temporary or permanent sediment basin in accordance with basin plans shown on the drawings. The basins shall accommodate the runoff of a local 5-year design storm. They shall be constructed as approved by the Contracting Officer to prevent sedimentation of downstream or downslope areas.

1.7.1.7 Disposal of Chemical Waste

The Contractor is responsible for the proper use, storage, and disposal of chemical material and waste in accordance with Fort Bragg Regulation 200-2. The PWBC Environmental/Natural Resources Division has established the

following requirements in order for the post to remain in compliance with hazardous waste requirements as established by both State of North Carolina and Federal environmental laws:

a. Compatible Containers: Chemical waste shall be contained and stored in aboveground compatible containers. Hazardous wastes shall not be stored underground. Any release or spill to the environment will be immediately reported to the Contracting Officer, PWBC Fire Department at telephone (910) 396-8112 and to the PWNC Environmental/Natural Resources Division at telephone (910) 396-3341.

b. Recycling: The Contractor is encouraged to provide for recycling of waste through the Defense Reutilization and Marketing Office, Fort Bragg.

c. Chemical Analysis: The Contractor is responsible for obtaining chemical analysis of all chemical waste. All chemical waste shall be disposed of in accordance with Fort Bragg's Waste Analysis Plan. Sampling of suspected hazardous waste is required to determine the hazardous waste characterization of the material. The Contractor is required to notify the Contracting Officer 1 day before the samples are taken. Samples shall be delivered by the Contracting Officer to the PWBC Environmental/Natural Resources Division for transmittal to an independent analytical laboratory. The laboratory shall be listed in the Environmental Protection Plan approved by the Contracting Officer and PWBC Environmental/Natural Resources Division.

d. Nonhazardous Waste: Waste that has been certified as nonhazardous waste may be removed off the project site by the Contractor. This waste shall be disposed of in accordance with all applicable State of North Carolina requirements and U.S. Army Center for Health Promotion and Preventive Medicine (CHPPM) guidance. The Contractor shall address the disposal method and location of the disposal site for each chemical waste in the Environmental Protection Plan for the project.

e. Hazardous Waste: The Contractor may not normally remove hazardous waste from Fort Bragg. Removal shall be performed by a licensed hazardous waste firm. The hazardous waste contractor shall prepare the hazardous waste manifest form for signature by the Environmental/Natural Resources Division before each shipment of hazardous waste. Refer to Fort Bragg Regulation 200-2.

f. Labeling: Each container of hazardous waste shall be immediately labeled with a hazardous waste label and marked with the current date once any hazardous waste is put in the container. The Contractor shall keep the containers closed and inspect them weekly for signs of rust or deterioration. Inspection results shall be documented. Additionally, the U.S. Department of Transportation shipping name shall be marked on each container before it is removed from Fort Bragg. Refer to Fort Bragg Regulation 200-2.

g. Training: The Contractor shall ensure that all of his employees who handle hazardous waste are trained in the management requirements for hazardous waste. Two hours of on-the-job training by the Environmental/Natural Resources Division will be scheduled for the first Wednesday of each month. All Contractor employees physically handling or managing waste media shall receive this training. Refer to Fort Bragg Regulation 200-2.

1.7.1.8 Disposal of Discarded Materials

Discarded materials, other than those which can be included in the solid waste category, will be handled as directed by the Contracting Officer. Construction and demolition debris shall be disposed of at the Fort Bragg demolition landfill on Lamont Road, and materials contaminated by asbestos or lead paint shall be contained and disposed of in the asbestos section of the demolition landfill. A permit from the PWBC Environmental/Natural Resources Division is required to dispose of materials in the landfills on post.

1.7.2 Preservation and Recovery of Historical, Archaeological, and Cultural Resources

Existing historical, archaeological, and cultural resources within the Contractor's work area will be designated by the Contracting Officer and precautions taken to preserve all significant resources as they existed at the time they were pointed out to the Contractor. The Contracting Officer's guidance shall be taken from the recommendations of the cultural resources survey produced for the project area by the Savannah District, U.S. Army Corps of Engineers. The Contractor shall install all protection for resources designated on the drawings and shall be responsible for their preservation during this contract.

1.7.2.1 Artifacts Discovered During Construction

Any unforeseen historical or archaeological finds encountered during Contractor operations shall be justification to cease all activity in the affected area. The Contracting Officer shall be promptly notified and shall notify the PWBC Environmental/Natural Resources Division. The Government will determine the significance of the findings, if necessary, after consultation with the North Carolina State Historic Preservation Officer, prior to authorizing the Contractor to resume operations in that area.

1.7.2.2 Cultural Resources Protected by Law

Cultural resources on Federal property are protected and managed by the Archaeological Resources Protection Act of 1979, and other applicable laws. Artifacts may be collected on Fort Bragg only after approval by the Contracting Officer and the PWBC Environmental/Natural Resources office as part of a controlled research design for scientific and cultural purposes. Collection for personal use is not authorized. Conviction subjects the violator to civil and criminal penalties.

1.7.3 Protection of Water Resources

The Contractor shall keep construction activities under surveillance, management, and control to avoid pollution of surface and ground waters. Special management techniques shall be implemented to control water pollution by any construction activities which are included in the performance of this contract.

1.7.3.1 Monitoring of Environmental Damage

Monitoring of water courses and wetland affected by construction activities shall be the responsibility of the Contractor. Wetland is intolerant to disturbance and will require special design and management to prevent encroachment. During construction, action will be required to maintain buffer areas and soil erosion control measures near water areas which could

be adversely affected by construction activities.

1.7.4 Protection of Wildlife and Wildlife Habitat

The Contractor shall keep construction activities under surveillance, management, and control to minimize interference with, disturbance to, and damage of wildlife. Information concerning any species that require specific attention, along with measures for their protection, will be provided by the PWBC Environmental/Natural Resources Division through the Contracting Officer to the Contractor prior to start of construction operations.

1.7.4.1 Endangered Species Act

The Federal Endangered Species Act of 1973, as amended in 1982, requires that Federal lands be assessed for impacts upon endangered species and that such species be managed and protected. Although there are a number of rare, threatened, or endangered plant and animal species on Fort Bragg which are listed by either the Federal or State Government, the species most often of concern are an endangered bird, the red-cockaded woodpecker (RCW) (Picoides borealis) and two endangered plants, the rough-leaf loosestrife (RLLS) (Lysimachia asperulaefolia) and Michaux's sumac (MS) (Rhus michauxii). Species proposed for listing under the provisions of the Federal Endangered Species Act are entitled to the same protection as those actually listed.

1.7.4.2 Red-Cockaded Woodpecker

The RCW is dependent upon large numbers of mature pine trees for its survival. The birds are not tolerant of disturbance. Their habitat is managed by the PWBC Environmental/Natural Resources Division, Endangered Species Branch. The habitat of the RCW is marked in the following manner: (1) cavity trees which are used by the birds for roosting and nesting are marked with two broad bands of white paint and (2) each colony site is protected by a buffer area at least 200 feet in diameter around the cavity trees. Trees on the edge of the buffer area are marked with a single broad band of white paint. Fixed activity such as storage of construction materials, operation of concrete batch plants, or parking of vehicles is not authorized inside the buffer area. Molesting the birds or damaging their habitat is a violation of the Endangered Species Act. Conviction can subject the violator to severe civil and criminal penalties.

1.7.4.3 Endangered Plants

Endangered plants are dependent for their survival upon specific environmental conditions such as soil type, slope aspect, moisture, and light. They are not tolerant of disturbance. Their habitat is managed by the PWBC Environmental/Natural Resources Division, Endangered Species Branch. Each colony site is protected by a buffer area at least 200 feet in diameter. Trees on the edge of the buffer area are marked with a single broad band of white paint. Fixed activity such as storage of construction materials, operation of concrete batch plants, or parking of vehicles is prohibited inside the buffer area. Damaging the habitat of endangered plants is a violation of the Endangered Species Act. Conviction can subject the violator to severe civil and criminal penalties.

1.7.5 Protection of Air Resources

The Contractor shall keep construction activities under surveillance,

management, and control to minimize pollution of air resources. All activities, equipment, processes, and work operated or performed by the Contractor in accomplishing the specified construction shall be in strict accordance with all State of North Carolina and Federal emission and performance laws and standards. Ambient Air Quality Standards set by the Environmental Protection Agency (EPA) shall be maintained for all construction operations and activities. The Contractor shall have sufficient functional equipment available to accomplish the task.

1.7.5.1 Particulates

Dust particles, aerosols, and gaseous byproducts from all construction activities and the processing and preparing of materials, such as from asphaltic batch plants, shall be controlled at all times.

1.7.5.2 Odors

Odors shall be controlled at all times for all construction activities, processing, and preparation of materials.

1.7.5.3 Air Quality

Monitoring of air quality shall be the responsibility of the Contractor. All air areas affected by the construction activities shall be monitored by the Contractor when directed by the Contracting Officer.

1.7.6 Reduction of Sound Intrusions

The Contractor shall keep construction activities under surveillance and control to minimize disturbances caused by excessive noise. Equipment shall have properly operating noise-muffling devices for the entire length of the contract.

1.7.7 Application of Pesticides

The Contractor shall apply all pesticides in accordance with the requirements of the Federal Insecticide, Fungicide, and Rodenticide Act, using pesticides approved by the EPA and following the instructions on the manufacturer's label. Application of termiticides during construction, if applicable, will be addressed in paragraph SOIL TREATMENT of Section 02315 EXCAVATION, FILLING, AND BACKFILLING FOR BUILDINGS.

1.7.7.1 Licensing and Certification

All pesticide applications shall be performed by a Contractor certified in the EPA category or categories which cover the work to be performed and shall hold a valid business license. For work at Fort Bragg, the Contractor shall be certified and licensed by the State of North Carolina. The Contractor shall present evidence of such licensing and certification to the Contracting Officer for approval prior to award of the contract.

1.8 POST-CONSTRUCTION CLEANUP

The Contractor shall be responsible for cleaning up all areas affected by the construction and restore them back to at least their original condition to include landscaping; planting of trees, grass, and shrubs damaged by construction; and raking and disposal of debris such as roofing shingles, paper, nails, glass, sheet metal, bricks, and waste concrete. Backfilled areas shall be machine compacted and replanted with grass. Construction

debris shall be removed and properly disposed of. Culverts and drainage ditches with sediment from the construction area shall be cleared routinely to maintain proper drainage and recleaned prior to completion of the contract.

1.9 RESTORATION OF LANDSCAPE DAMAGE

The Contractor shall restore all landscape features damaged or destroyed during construction operations outside the limits of the approved work areas. Such restoration shall be in accordance with the Environmental Protection Plan submitted for approval to the Contracting Officer. This work will be accomplished at the Contractor's expense.

1.10 MAINTENANCE OF POLLUTION CONTROL FACILITIES

The Contractor shall maintain all constructed facilities and portable pollution control devices for the duration of the contract or for the length of time construction activities produce the particular pollutant.

1.10.1 Containment Berms

The Contractor shall build a containment berm around temporary aboveground fuel storage tanks. The bermed area shall be large enough to contain 125 percent of the volume of the storage tanks if there is a leak. The Contractor shall not install any temporary underground storage tanks.

1.10.2 Erosion Control Devices

The Contractor shall immediately repair any damaged erosion control structures, such as silt fences, and remove accumulated sediment.

1.10.3 Storm Drains

The Contractor shall ensure sediment does not block storm drains. The Contractor shall be responsible for cleaning storm drains blocked due to erosion of sediment off site.

1.11 TRAINING OF CONTRACTOR PERSONNEL IN POLLUTION CONTROL

The Contractor shall train his personnel in all phases of environmental protection. The training shall include methods of detecting and avoiding pollution, familiarization with pollution standards, both statutory and contractual, and installation and care of facilities (vegetative covers and instruments required for monitoring purposes) to ensure adequate and continuous environmental pollution control. Such training shall be completed before contract work begins.

PART 2 PRODUCTS (Not Applicable)
PART 3 EXECUTION (Not Applicable)

-- End of Section --

SECTION TABLE OF CONTENTS

DIVISION 02 - SITE WORK

SECTION 02220

DEMOLITION

12/97

PART 1 GENERAL

1.1 REFERENCES
1.2 GENERAL REQUIREMENTS
1.3 SUBMITTALS
1.4 DUST CONTROL
1.5 PROTECTION
1.5.1 Protection of Personnel
1.5.2 Protection of Structures
1.5.3 Protection of Existing Property
1.5.4 Protection From the Weather
1.5.5 Protection of Trees
1.5.6 Environmental Protection
1.6 BURNING
1.7 USE OF EXPLOSIVES

PART 2 PRODUCTS (Not Applicable)

PART 3 EXECUTION

3.1 OMITTED
3.2 UTILITIES
3.3 FILLING
3.4 DISPOSITION OF MATERIAL
3.4.1 Salvageable Items and Material
3.4.1.1 Material Salvaged for the Contractor
3.4.1.2 Items Salvaged for the Government
3.4.1.3 Omitted
3.4.1.4 Historical Items
3.4.2 Unsalvageable Material
3.5 CLEAN UP
3.6 PAVEMENTS

-- End of Section Table of Contents --

CEGS-02220 (December 1997)

SECTION 02220

DEMOLITION
12/97

PART 1 GENERAL

1.1 REFERENCES

The publications listed below form a part of this specification to the extent referenced. The publications are referred to in the text by basic designation only.

ENGINEERING MANUALS (EM)

EM 385-1-1	(1996) U.S. Army Corps of Engineers Safety and Health Requirements Manual

1.2 GENERAL REQUIREMENTS

The work includes demolition, salvage of identified items and materials, and removal of resulting rubbish and debris. Rubbish and debris shall be removed from Government property daily, unless otherwise directed, to avoid accumulation at the demolition site. Materials that cannot be removed daily shall be stored in areas specified by the Contracting Officer. In the interest of occupational safety and health, the work shall be performed in accordance with EM 385-1-1, Section 23, Demolition, and other applicable Sections. In the interest of conservation, salvage shall be pursued to the maximum extent possible; salvaged items and materials shall be disposed of as specified.

1.3 SUBMITTALS

Government approval is required for submittals with a "G" designation; submittals not having a "G" designation are for information only. When used, a designation following the "G" designation identifies the office that will review the submittal for the Government. The following shall be submitted in accordance with Section 01330 SUBMITTAL PROCEDURES:

SD-03 Product Data

Work Plan; G, RE

The procedures proposed for the accomplishment of the work. The procedures shall provide for safe conduct of the work, including procedures and methods to provide necessary supports, lateral bracing and shoring when required, careful removal and disposition of materials specified to be salvaged, protection of property which is to remain undisturbed, coordination with other work in progress, and timely disconnection of utility services. The procedures shall include a detailed description of the methods and equipment to be used for each operation, and the sequence of operations in accordance with EM 385-1-1.

1.4 DUST CONTROL

The amount of dust resulting from demolition shall be controlled to prevent the spread of dust to occupied portions of the construction site and to avoid creation of a nuisance in the surrounding area. Use of water will not be permitted when it will result in, or create, hazardous or objectionable conditions such as ice, flooding and pollution.

1.5 PROTECTION

1.5.1 Protection of Personnel

During the demolition work the Contractor shall continuously evaluate the condition of the structure being demolished and take immediate action to protect all personnel working in and around the demolition site. No area, section, or component of floors, roofs, walls, columns, pilasters, or other structural element will be allowed to be left standing without sufficient bracing, shoring, or lateral support to prevent collapse or failure while workmen remove debris or perform other work in the immediate area.

1.5.2 Protection of Structures

Floors, roofs, walls, columns, pilasters, and other structural components that are designed and constructed to stand without lateral support or shoring, and are determined to be in stable condition, shall remain standing without additional bracing, shoring, of lateral support until demolished, unless directed otherwise by the Contracting Officer. The Contractor shall ensure that no elements determined to be unstable are left unsupported and shall be responsible for placing and securing bracing, shoring, or lateral supports as may be required as a result of any cutting, removal, or demolition work performed under this contract.

1.5.3 Protection of Existing Property

Before beginning any demolition work, the Contractor shall survey the site and examine the drawings and specifications to determine the extent of the work. The Contractor shall take necessary precautions to avoid damage to existing items to remain in place, to be reused, or to remain the property of the Government; any damaged items shall be repaired or replaced as approved by the Contracting Officer. The Contractor shall coordinate the work of this section with all other work and shall construct and maintain shoring, bracing, and supports as required. The Contractor shall ensure that structural elements are not overloaded and shall be responsible for increasing structural supports or adding new supports as may be required as a result of any cutting, removal, or demolition work performed under this contract.

1.5.4 Protection From the Weather

The interior of buildings to remain; salvageable materials and equipment shall be protected from the weather at all times.

1.5.5 Protection of Trees

Trees within the project which are indicated to be left in place, shall be protected by a 4-foot high fence. The fence shall be securely erected and follow the line shown on the plans. Any tree designated to remain that is damaged during the work under this contract shall be replaced in kind or as approved by the Contracting Officer.

1.5.6 Environmental Protection

The work shall comply with the requirements of Section 02013 ENVIRONMENTAL PROTECTION DURING CONSTRUCTION.

1.6 BURNING

The use of burning at the project site for the disposal of refuse and debris will not be permitted.

1.7 USE OF EXPLOSIVES

Use of explosives will not be permitted.

PART 2 PRODUCTS (Not Applicable)

PART 3 EXECUTION

3.1 OMITTED

3.2 UTILITIES

Existing utilities shall be removed or protected as indicated on the contract drawings. When utility lines are encountered that are not indicated on the drawings, the Contracting Officer shall be notified prior to further work in that area. The portion of the utilities to be removed that pass under the tree protection area shall be plugged and abandoned in place.

3.3 FILLING

Holes, open basements and other hazardous openings shall be filled in accordance with Section 02300 EARTHWORK.

3.4 DISPOSITION OF MATERIAL

Title to material and equipment to be demolished, except Government salvage and historical items, is vested in the Contractor upon receipt of notice to proceed. The Government will not be responsible for the condition, loss or damage to such property after notice to proceed.

3.4.1 Salvageable Items and Material

Contractor shall salvage items and material to the maximum extent possible.

3.4.1.1 Material Salvaged for the Contractor

Material salvaged for the Contractor shall be stored as approved by the Contracting Officer and shall be removed from Government property before completion of the contract. Material salvaged for the Contractor shall not be sold on the site.

3.4.1.2 Items Salvaged for the Government

Salvaged items to remain the property of the Government shall be removed in a manner to prevent damage, and packed or crated to protect the items from damage while in storage or during shipment. Items damaged during removal or storage shall be repaired or replaced to match existing items.

Containers shall be properly identified as to contents.

3.4.1.3 Omitted

3.4.1.4 Historical Items

Historical items shall be removed in a manner to prevent damage. The following historical items shall be delivered to the Government for disposition: Corner stones, contents of corner stones, and document boxes wherever located on the site.

3.4.2 Unsalvageable Material

Concrete, masonry, and other noncombustible material, except concrete permitted to remain in place, shall be disposed of in the disposal area located on the drawings. Concrete suitable for grinding to rubble shall be stockpiled separately in the demolition debris landfill. Combustible material shall be disposed of in the area indicated on the drawings.

3.5 CLEAN UP

Debris and rubbish shall be removed from basement and similar excavations. Debris shall be removed and transported in a manner that prevents spillage on streets or adjacent areas. Local regulations regarding hauling and disposal shall apply.

3.6 PAVEMENTS

Existing pavements designated for removal shall be saw cut and removed in accordance with the details shown on the drawings and to the limits indicated on the drawings.

-- End of Section --

SECTION TABLE OF CONTENTS

DIVISION 02 - SITE WORK

SECTION 02230

CLEARING AND GRUBBING

06/97

PART 1 GENERAL

1.1 DEFINITIONS
1.1.1 Clearing
1.1.2 Grubbing
1.2 SUBMITTALS

PART 2 PRODUCTS (Not Applicable)

PART 3 EXECUTION

3.1 CLEARING
3.2 GRUBBING
3.3 TREE REMOVAL
3.4 DISPOSAL OF MATERIALS
3.4.1 Salable Timber
3.4.2 Materials Other Than Salable Timber

-- End of Section Table of Contents --

CEGS-02230 (June 1997)

SECTION 02230

CLEARING AND GRUBBING
06/97

PART 1 GENERAL

1.1 DEFINITIONS

1.1.1 Clearing

Clearing shall consist of the felling, trimming, and cutting of trees into sections and the satisfactory disposal of the trees and other vegetation designated for removal, including down timber, snags, brush, and rubbish occurring in the areas to be cleared.

1.1.2 Grubbing

Grubbing shall consist of the removal and disposal of stumps, roots larger than 3 inches in diameter, and matted roots from the designated grubbing areas.

1.2 SUBMITTALS

Government approval is required for submittals with a "G" designation; submittals not having a "G" designation are for information only. When used, a designation following the "G" designation identifies the office that will review the submittal for the Government. The following shall be submitted in accordance with Section 01330 SUBMITTAL PROCEDURES:

SD-03 Product Data

Materials Other Than Salable Timber

Written permission to dispose of such products on private property shall be filed with the Contracting Officer.

PART 2 PRODUCTS (Not Applicable)

PART 3 EXECUTION

3.1 CLEARING

Trees, stumps, roots, brush, and other vegetation in areas to be cleared shall be cut off flush with or below the original ground surface, except such trees and vegetation as may be indicated or directed to be left standing. Trees designated to be left standing within the cleared areas shall be trimmed of dead branches 1-1/2 inches or more in diameter and shall be trimmed of all branches the heights indicated or directed. Limbs and branches to be trimmed shall be neatly cut close to the bole of the tree or main branches. Cuts more than 1-1/2 inches in diameter shall be painted with an approved tree-wound paint. Trees and vegetation to be left standing shall be protected from damage incident to clearing, grubbing, and construction operations by the erection of barriers or by such other means

as the circumstances require.

3.2 GRUBBING

Material to be grubbed, together with logs and other organic or metallic debris not suitable for foundation purposes, shall be removed to a depth of not less than 18 inches below the original surface level of the ground in areas indicated to be grubbed and in areas indicated as construction areas under this contract, such as areas for buildings, and areas to be paved. Depressions made by grubbing shall be filled with suitable material and compacted to make the surface conform with the original adjacent surface of the ground.

3.3 TREE REMOVAL

Where indicated or directed, trees and stumps that are designated as trees shall be removed from areas outside those areas designated for clearing and grubbing. This work shall include the felling of such trees and the removal of their stumps and roots as specified in paragraph GRUBBING. Trees shall be disposed of as specified in paragraph DISPOSAL OF MATERIALS.

3.4 DISPOSAL OF MATERIALS

3.4.1 Salable Timber

All felled timber from which saw logs, pulpwood, posts, poles, ties, mine props, or cordwood can be produced shall be considered as salable timber, and shall be trimmed of limbs and tops, sawed into salable lengths of 10 feet, and stockpiled at locations as directed. The disposal of the stockpiled timber will be by the Government.

3.4.2 Materials Other Than Salable Timber

Logs, stumps, roots, brush, rotten wood, and other refuse from the clearing and grubbing operations, except for salable timber, shall be disposed of in the designated waste disposal area, except when otherwise directed in writing. Such directive will state the conditions covering the disposal of such products and will also state the areas in which they may be placed.

-- End of Section --

SECTION TABLE OF CONTENTS

DIVISION 02 - SITE WORK

SECTION 02300

EARTHWORK

12/97

PART 1 GENERAL

1.1 REFERENCES
1.2 OMITTED
1.3 OMITTED
1.4 DEFINITIONS
1.4.1 Satisfactory Materials
1.4.2 Unsatisfactory Materials
1.4.3 Cohesionless and Cohesive Materials
1.4.4 Degree of Compaction
1.4.5 Omitted
1.4.6 Topsoil
1.5 SUBMITTALS
1.6 SUBSURFACE DATA
1.7 CLASSIFICATION OF EXCAVATION
1.8 BLASTING
1.9 UTILIZATION OF EXCAVATED MATERIALS

PART 2 PRODUCTS (Not Applicable)

PART 3 EXECUTION

3.1 STRIPPING OF TOPSOIL
3.2 GENERAL EXCAVATION
3.2.1 Ditches, Gutters, and Channel Changes
3.2.2 Drainage Structures
3.3 SELECTION OF BORROW MATERIAL
3.4 OPENING AND DRAINAGE OF EXCAVATION AND BORROW PITS
3.5 GRADING AREAS
3.6 BACKFILL
3.7 PREPARATION OF GROUND SURFACE FOR EMBANKMENTS
3.7.1 General Requirements
3.7.2 Frozen Material
3.8 EMBANKMENTS
3.8.1 Earth Embankments
3.8.2 Moisture Content
3.9 SUBGRADE PREPARATION
3.9.1 Construction
3.9.2 Moisture Content
3.9.3 Compaction
3.9.3.1 Omitted
3.9.3.2 Subgrade for Pavements
3.9.3.3 Subgrade for Shoulders
3.10 SHOULDER CONSTRUCTION
3.11 FINISHING
3.12 PLACING TOPSOIL
3.13 TESTING

3.13.1 Fill and Backfill Material Gradation, Classification, and Moisture Content
3.13.2 In-Place Densities
3.13.3 Moisture Content
3.13.4 Optimum Moisture and Laboratory Maximum Density
3.13.5 Compaction Control
3.13.6 Tolerance Tests for Subgrades
3.13.7 Proof Rolling
3.14 SUBGRADE AND EMBANKMENT PROTECTION

-- End of Section Table of Contents --

CEGS-02300 (December 1997)

SECTION 02300

EARTHWORK
12/97

PART 1 GENERAL

1.1 REFERENCES

The publications listed below form a part of this specification to the extent referenced. The publications are referred to in the text by basic designation only.

AMERICAN SOCIETY FOR TESTING AND MATERIALS (ASTM)

ASTM C 136	(2001) Sieve Analysis of Fine and Coarse Aggregates
ASTM D 422	(1963; R 1998) Particle-Size Analysis of Soils
ASTM D 1140	(2000) Amount of Material in Soils Finer than the No. 200 (75-micrometer) Sieve
ASTM D 1556	(2000) Density and Unit Weight of Soil in Place by the Sand-Cone Method
ASTM D 1557	(2000) Laboratory Compaction Characteristics of Soil Using Modified Effort (56,000 ft-lbf/cu. ft. (2,700 kN-m/cu. m.))
ASTM D 2216	(1998) Laboratory Determination of Water (Moisture) Content of Soil and Rock by Mass
ASTM D 2487	(2000) Classification of Soils for Engineering Purposes (Unified Soil Classification System)
ASTM D 4318	(2000) Liquid Limit, Plastic Limit, and Plasticity Index of Soils

1.2 OMITTED
1.3 OMITTED

1.4 DEFINITIONS

1.4.1 Satisfactory Materials

Satisfactory materials shall comprise any materials classified by ASTM D 2487 as GW, GP, GM, GP-GM, GW-GM, GC, GP-GC, GM-GC, SW, SP, SM, SW-SM, SC, SW-SC, SP-SM, SP-SC, CL, ML, and CL-ML. Satisfactory materials for grading shall be free from roots and other organic matter, trash, debris, frozen material, and stones larger than 3 inches in any dimension.

1.4.2 Unsatisfactory Materials

Materials which do not comply with the requirements for satisfactory materials are unsatisfactory. Unsatisfactory materials also include man-made fills; trash; refuse; backfills from previous construction; demolition debris; and material classified as satisfactory which contains root and other organic matter or frozen material. The Contracting Officer shall be notified of any contaminated materials.

1.4.3 Cohesionless and Cohesive Materials

Cohesionless materials include materials classified in ASTM D 2487 as GW, GP, SW, and SP. Cohesive materials include materials classified as GC, GP-GC, GM-GC, SC, SW-SC, SP-SC, ML, CL, CL-ML, MH, and CH and the unsatisfactory organic materials Pt, OL, and OH. Materials classified as GM, GP-GM, GW-GM, SM, SW-SM, and SP-SM will be identified as cohesionless only when the fines are nonplastic. Testing required for classifying materials shall be in accordance with ASTM D 4318, ASTM C 136, ASTM D 422, and ASTM D 1140.

1.4.4 Degree of Compaction

Degree of compaction required is expressed as a percentage of the maximum density obtained by the test procedure presented in ASTM D 1557 abbreviated as a percent of laboratory maximum density.

1.4.5 Omitted

1.4.6 Topsoil

Material suitable for topsoil shall be obtained from required stripping of the project site and/or areas off the installation. Material obtained from off-installation areas suitable for topsoil shall meet the requirements specified for topsoil in Section 02936 TURF - GRASS SEEDING.

1.5 SUBMITTALS

Government approval is required for submittals with a "GA" designation; submittals having an "FIO" designation are for information only. The following shall be submitted in accordance with Section 01330 SUBMITTAL PROCEDURES.

SD-03 Product Data

Earthwork; G, RE.

Procedure and location for disposal of unused satisfactory material. Blasting plan when blasting is permitted. Proposed source of borrow material.

Notification of Earthwork.

Notification of encountering rock in the project. Advance notice on the opening of excavation or borrow areas. Advance notice on shoulder construction for rigid pavements.

SD-06 Test Reports

Testing.

Within 24 hours of conclusion of physical tests, three copies of test results.

SD-07 Certificates

Testing; G, RE.

Qualifications of the commercial testing laboratory.

1.6 SUBSURFACE DATA

Logs of soil test borings and cone penetration test (CPT) soundings and soil test data are shown on the drawings. These data represent the best subsurface information available; however, variations may exist in the subsurface between boring locations. The water level data indicate only the conditions at the particular time or times the information was obtained and may not indicate variations such as those caused by periods of drought or increased rainfall, seasonal fluctuations in rainfall, changes in the surface drainage pattern, or application of irrigation water.

1.7 CLASSIFICATION OF EXCAVATION

No consideration will be given to the nature of the materials, and all excavation will be designated as unclassified excavation.

1.8 BLASTING

Blasting will not be permitted.

1.9 UTILIZATION OF EXCAVATED MATERIALS

Unsatisfactory materials removed from excavations shall be disposed of in designated waste disposal areas as directed. Satisfactory material removed from excavations shall be used, insofar as practicable, in the construction of fills, embankments, subgrades, shoulders, bedding (as backfill), and for similar purposes. No satisfactory excavated material shall be wasted without specific written authorization. Satisfactory material authorized to be wasted shall be disposed of in designated areas approved for surplus material storage or designated waste disposal areas as directed. No excavated material shall be disposed of to obstruct the flow of any stream, endanger a partly finished structure, impair the efficiency or appearance of any structure, or be detrimental to the completed work in any way.

PART 2 PRODUCTS (Not Applicable)

PART 3 EXECUTION

3.1 STRIPPING OF TOPSOIL

Within areas to be excavated or to receive fill, topsoil shall be stripped to full depth. Topsoil shall be spread on areas already graded and prepared for topsoil, or transported and deposited in stockpiles convenient to areas that are to receive application of the topsoil later, or at locations indicated or specified. Topsoil shall be kept separate from other excavated materials, brush, litter, objectionable weeds, roots, stones larger than 2 inches in maximum dimension, and other materials that would interfere with planting and maintenance operations. Any surplus of

topsoil from excavations and grading shall be removed from the site and disposed of in designated areas approved for surplus material storage or designated waste disposal areas as directed.

3.2 GENERAL EXCAVATION

The Contractor shall perform excavation of every type of material encountered within the limits of the project to the lines, grades, and elevations indicated and as specified. Grading shall be in conformity with the typical sections shown and the tolerances specified in paragraph FINISHING. Satisfactory excavated materials shall be transported to and placed in fill or embankment within the limits of the work. Unsatisfactory materials encountered within the limits of the work shall be excavated below grade and replaced with satisfactory materials as directed. Such excavated material and the satisfactory material ordered as replacement shall be included in excavation. Surplus satisfactory excavated material not required for fill or embankment shall be disposed of in designated areas approved for surplus material storage or designated waste disposal areas as directed. Unsatisfactory excavated material shall be disposed of off post at no expense to the Government. During construction, excavation and fill placement shall be performed in a manner and sequence that will provide proper drainage at all times. Material required for fill or embankment in excess of that produced by excavation within the grading limits shall be excavated from the borrow areas indicated, or if no borrow areas are indicated, from approved areas off the installation selected by the Contractor.

3.2.1 Ditches, Gutters, and Channel Changes

Excavation of ditches, gutters, and channel changes shall be accomplished by cutting accurately to the cross sections, grades, and elevations shown. Ditches and gutters shall not be excavated below grades shown. Excessive open ditch or gutter excavation shall be backfilled with satisfactory, thoroughly compacted, material to grades shown. Material excavated shall be disposed of as shown or as directed, except that in no case shall material be deposited less than 4 feet from the edge of a ditch. The Contractor shall maintain excavations free from detrimental quantities of leaves, brush, sticks, trash, and other debris until final acceptance of the work.

3.2.2 Drainage Structures

Excavations shall be made to the lines, grades, and elevations shown, or as directed. Trenches and foundation pits shall be of sufficient size to permit the placement and removal of forms for the full length and width of structure footings and foundations as shown. Rock or other hard foundation material shall be cleaned of loose debris and cut to a firm, level, stepped, or serrated surface. Loose disintegrated rock and thin strata shall be removed. When concrete or masonry is to be placed in an excavated area, the bottom of the excavation shall not be disturbed. Excavation to the final grade level shall not be made until just before the concrete or masonry is to be placed.

3.3 SELECTION OF BORROW MATERIAL

Borrow material shall be selected to meet the requirements and conditions of the particular fill or embankment for which it is to be used. Borrow material shall be obtained from the borrow areas shown, or if no borrow areas are shown, from approved private sources, selected by the Contractor.

Unless otherwise provided in the contract, the Contractor shall obtain from the owners the right to procure material, pay royalties and other charges involved, and bear the expense of developing the sources, including rights-of-way for hauling. Borrow material from approved sources on Government-controlled land may be obtained without payment of royalties. Unless specifically provided, no borrow shall be obtained within the limits of the project site without prior written approval. Necessary clearing, grubbing, and satisfactory drainage of borrow pits and the disposal of debris thereon shall be considered related operations to the borrow excavation.

3.4 OPENING AND DRAINAGE OF EXCAVATION AND BORROW PITS

Except as otherwise permitted, borrow pits and other excavation areas shall be excavated providing adequate drainage. Overburden and other spoil material shall be transported to the designated waste disposal areas. Borrow pits shall be neatly trimmed and drained after the excavation is completed. The Contractor shall ensure that excavation of any area, operation of borrow pits, or dumping of spoil material results in minimum detrimental effects on natural environmental conditions.

3.5 GRADING AREAS

Where indicated, work will be divided into grading areas within which satisfactory excavated material shall be placed in embankments, fills, and required backfills. The Contractor shall not haul satisfactory material excavated in one grading area to another grading area except when so directed in writing.

3.6 BACKFILL

Backfill adjacent to any and all types of structures shall be placed and compacted to at least 90 percent laboratory maximum density to prevent wedging action or eccentric loading upon or against the structure. Ground surface on which backfill is to be placed shall be prepared as specified in paragraph PREPARATION OF GROUND SURFACE FOR EMBANKMENTS. Compaction requirements for backfill materials shall also conform to the applicable portions of paragraphs PREPARATION OF GROUND SURFACE FOR EMBANKMENTS, EMBANKMENTS, and SUBGRADE PREPARATION, and Section 02630 STORM-DRAINAGE SYSTEM; and Section 02316 EXCAVATION, TRENCHING, AND BACKFILLING FOR UTILITIES SYSTEMS. Compaction shall be accomplished by sheepsfoot rollers, pneumatic-tired rollers, steel-wheeled rollers, vibratory compactors, or other approved equipment.

3.7 PREPARATION OF GROUND SURFACE FOR EMBANKMENTS

3.7.1 General Requirements

Ground surface on which fill is to be placed shall be stripped of live, dead, or decayed vegetation, rubbish, debris, and other unsatisfactory material; plowed, disked, or otherwise broken up to a depth of 8 inches; pulverized; moistened or aerated as necessary to plus or minus 2.5 percent of optimum moisture; thoroughly mixed; and compacted to at least 90 percent laboratory maximum density. Compaction shall be accomplished by sheepsfoot rollers, pneumatic-tired rollers, steel-wheeled rollers, vibratory compactors, or other approved equipment. The prepared ground surface shall be scarified and moistened or aerated as required just prior to placement of embankment materials to assure adequate bond between embankment material and the prepared ground surface.

3.7.2 Frozen Material

Embankment shall not be placed on a foundation which contains frozen material, or which has been subjected to freeze-thaw action. This prohibition encompasses all foundation types, including the natural ground, all prepared subgrades (whether in an excavation or on an embankment) and all layers of previously placed and compacted earth fill which become the foundations for successive layers of earth fill. All material that freezes or has been subjected to freeze-thaw action during the construction work, or during periods of temporary shutdowns, such as, but not limited to, nights, holidays, weekends, winter shutdowns, or earthwork operations, shall be removed to a depth that is acceptable to the Contracting Officer and replaced with new material. Alternatively, the material shall be thawed, dried, reworked, and recompacted to the specified criteria before additional material is placed. The Contracting Officer will determine when placement of fill shall cease due to cold weather. The Contracting Officer may elect to use average daily air temperatures, and/or physical observation of the soils for his determination. Embankment material shall not contain frozen clumps of soil, snow, or ice.

3.8 EMBANKMENTS

3.8.1 Earth Embankments

Earth embankments shall be constructed from satisfactory materials free of organic or frozen material and rocks with any dimension greater than 3 inches. The material shall be placed in successive horizontal layers of loose material not more than 8 inches in depth. Each layer shall be spread uniformly on a soil surface that has been moistened or aerated as necessary, and scarified or otherwise broken up so that the fill will bond with the surface on which it is placed. After spreading, each layer shall be plowed, disked, or otherwise broken up; moistened or aerated as necessary; thoroughly mixed; and compacted to at least 90 percent laboratory maximum density. Compaction requirements for the upper portion of earth embankments forming subgrade for pavements shall be identical with those requirements specified in paragraph SUBGRADE PREPARATION. Compaction shall be accomplished by sheepsfoot rollers, pneumatic-tired rollers, steel-wheeled rollers, vibratory compactors, or other approved equipment.

3.8.2 Moisture Content

Satisfactory materials in each layer of fill shall contain the amount of moisture within the limits specified below. Materials that are not within the specified limits after compaction shall be reworked regardless of density. The moisture content after compaction shall be as uniform as practicable throughout any one layer and shall be within the limits of 2.0 percentage points above optimum moisture content and 2.0 percentage points below optimum moisture content. Materials which are too wet shall be disced, harrowed, plowed, bladed, or otherwise manipulated to reduce the moisture content to within the specified limits. Materials which are too dry shall be broken up, sprinkled, and thoroughly mixed to bring the moisture content uniformly up to within specified limits. In the event that materials reach the fill which are not within the limits of moisture content specified above, the Contractor shall either adjust the moisture content to bring it within the specified limits or remove it from the fill.

3.9 SUBGRADE PREPARATION

3.9.1 Construction

Subgrade shall be shaped to line, grade, and cross section, and compacted as specified. This operation shall include plowing, disking, and any moistening or aerating required to obtain specified compaction. Materials shall be moistened or aerated as necessary to plus or minus 2.0 percent of optimum moisture. Soft or otherwise unsatisfactory material shall be removed and replaced with satisfactory excavated material or other approved material as directed. Low areas resulting from removal of unsatisfactory material or excavation of rock shall be brought up to required grade with satisfactory materials, and the entire subgrade shall be shaped to line, grade, and cross section and compacted as specified. When the subgrade is in cut, the top 8 inches of subgrade shall be scarified, windrowed, moistened or aerated as necessary to plus or minus 2.0 percent of optimum moisture, thoroughly blended, reshaped, and compacted. The elevation of the finish subgrade shall not vary more than 0.05 foot from the established grade and cross section.

3.9.2 Moisture Content

Satisfactory materials in the subgrade shall contain the amount of moisture within the limits specified below. Materials that are not within the specified limits after compaction shall be reworked regardless of density. The moisture content after compaction shall be as uniform as practicable throughout the subgrade and shall be within the limits of 2.0 percentage points above optimum moisture content and 2.0 percentage points below optimum moisture content. Materials which are too wet shall be disced, harrowed, plowed, bladed, or otherwise manipulated to reduce the moisture content to within the specified limits. Materials which are too dry shall be broken up, sprinkled, and thoroughly mixed to bring the moisture content uniformly up to within specified limits.

3.9.3 Compaction

Compaction shall be accomplished by sheepsfoot rollers, pneumatic-tired rollers, steel-wheeled rollers, vibratory compactors, or other approved equipment.

3.9.3.1 Omitted

3.9.3.2 Subgrade for Pavements

Subgrade for pavements shall be compacted to at least 95 percent laboratory maximum density for a depth below the subgrade of 12 inches in fill or backfill and 8 inches in undisturbed native soil or cut.

3.9.3.3 Subgrade for Shoulders

Subgrade for shoulders shall be compacted to at least 95 percent laboratory maximum density for a depth of 8 inches below finish grade. In areas where the shoulder is to be grassed the top 8 inches shall be compacted to a density of at least 90 percent laboratory maximum density.

3.10 SHOULDER CONSTRUCTION

Shoulders shall be constructed of satisfactory excavated or borrow material or as otherwise shown or specified. Shoulders shall be constructed as soon as possible after adjacent paving is complete, but in the case of rigid pavements, shoulders shall not be constructed until permission of the

Contracting Officer has been obtained. The entire shoulder area shall be compacted to at least the percentage of maximum density as specified in paragraph SUBGRADE PREPARATION above. Compaction shall be accomplished by sheepsfoot rollers, pneumatic-tired rollers, steel-wheeled rollers, vibratory compactors, or other approved equipment. Shoulder construction shall be done in proper sequence in such a manner that adjacent ditches will be drained effectively and that no damage of any kind is done to the adjacent completed pavement. The completed shoulders shall be true to alignment and grade and shaped to drain in conformity with the cross section shown.

3.11 FINISHING

The surface of excavations, embankments, and subgrades shall be finished to a smooth and compact surface in accordance with the lines, grades, and cross sections or elevations shown. The degree of finish for graded areas shall be within 0.1 foot of the grades and elevations indicated except that the degree of finish for subgrades shall be specified in paragraph SUBGRADE PREPARATION. Gutters and ditches shall be finished in a manner that will result in effective drainage. The surface of areas to be turfed shall be finished to a smoothness suitable for the application of turfing materials.

3.12 PLACING TOPSOIL

On areas to receive topsoil, the surface shall be free of materials that would hinder planting or maintenance operations. The compacted subgrade soil shall be scarified to a depth of 2 inches by disking or plowing for the bonding of topsoil with the subsoil. Topsoil shall then be uniformly spread to a thickness of 4 inches, and graded to the elevations and slopes shown and left free of surface irregularities. Topsoil shall be compacted by one pass of a cultipacker, roller, or other approved equipment weighing 100 to 160 pounds per linear foot of roller. Topsoil shall not be placed when the subgrade is frozen, excessively wet, extremely dry, or in a condition otherwise detrimental to seeding, planting, or proper grading.

3.13 TESTING

Testing shall be performed by an approved commercial testing laboratory. Field in-place density shall be determined in accordance with ASTM D 1556. When test results indicate that compaction is not as specified, the material shall be removed, replaced and recompacted to meet specification requirements. Tests on recompacted areas shall be performed to determine conformance with specification requirements. Inspections and test results shall be certified by a registered professional civil engineer. These certifications shall state that the tests and observations were performed by or under the direct supervision of the engineer and that the results are representative of the materials or conditions being certified by the tests. The following number of tests, if performed at the appropriate time, will be the minimum acceptable for each type operation.

3.13.1 Fill and Backfill Material Gradation, Classification, and Moisture Content

One test per 2000 cubic yards stockpiled or in-place source material. Gradation of fill and backfill material shall be determined in accordance with ASTM D 422 and ASTM D 1140 (wash No. 200, without hydrometer). Liquid limit and plasticity index shall be determined in accordance with ASTM D 4318. Classification of soils shall be in accordance with ASTM D 2487. Moisture content shall be determined in accordance with ASTM D 2216.

3.13.2 In-Place Densities

a. One test per 10,000 square feet, or fraction thereof, of each lift of fill or backfill areas compacted by other than hand-operated machines.

b. One test per 500 square feet, or fraction thereof, of each lift of fill or backfill areas compacted by hand-operated machines.

c. One test per 150 linear feet, or fraction thereof, of each lift of embankment or backfill for roads.

d. One test per 5,000 square feet, or fraction thereof, of subgrade in native soil or cut in all areas, excluding asphalt roads.

e. One test per 150 linear feet, or fraction thereof, of subgrade in embankment or backfill, and in native soil or cut in asphalt roads.

3.13.3 Moisture Content

In the stockpile(s), excavation, or borrow areas, a minimum of two tests, each with a one-point or two-point compaction test, shall be performed per day per type of material or source of material being placed during stable weather conditions. During unstable weather, tests shall be made as dictated by local conditions to ensure the moisture content of the placed materials are within the specified limits.

3.13.4 Optimum Moisture and Laboratory Maximum Density

Tests shall be made for each type material or source of material including borrow material and material to be excavated to determine the optimum moisture and laboratory maximum density values. Test frequency shall be as specified in paragraph 3.13.2 In-Place Densities.

3.13.5 Compaction Control

The tests required on materials prior to placement, and the compaction control procedures and methods specified in paragraph 3.13.2 In-Place Densities in regard to compaction control of soils, and utilizing the one-point or two-point compaction methods to relate field density data to laboratory test values, shall fully apply to and be considered a part of this specification section.

3.13.6 Tolerance Tests for Subgrades

Continuous checks on the degree of finish specified in paragraph SUBGRADE PREPARATION shall be made during construction of the subgrades.

3.13.7 Proof Rolling

Proof rolling shall be as specified in Section 02722A AGGREGATE AND/OR GRADED-CRUSHED AGGREGATE BASE COURSE.

3.14 SUBGRADE AND EMBANKMENT PROTECTION

During construction, embankments and excavations shall be kept shaped and drained. Ditches and drains along subgrade shall be maintained to drain effectively at all times. The finished subgrade shall not be disturbed by

traffic or other operation and shall be protected and maintained by the Contractor in a satisfactory condition until ballast, subbase, base, or pavement is placed. The storage or stockpiling of materials on the finished subgrade will not be permitted. No subbase, base course, ballast, or pavement shall be laid until the subgrade has been checked and approved, and in no case shall subbase, base, surfacing, pavement, or ballast be placed on a muddy, spongy, or frozen subgrade.

-- End of Section --

SECTION TABLE OF CONTENTS

DIVISION 02 - SITE WORK

SECTION 02315

EXCAVATION, FILLING AND BACKFILLING FOR BUILDINGS

08/98

PART 1 GENERAL

1.1 REFERENCES
1.2 DEFINITIONS
1.2.1 Degree of Compaction
1.2.2 Maximum Dry Density
1.2.3 Optimum Moisture Content
1.2.4 Subsurface Data
1.2.5 Related Work
1.2.5.1 Site Grading and Excavation and Backfilling for Utilities
1.2.5.2 Termite Protection
1.3 SUBMITTALS

PART 2 PRODUCTS

2.1 MATERIALS
2.1.1 Satisfactory Materials
2.1.1.1 Natural Insitu Soil
2.1.1.2 Foundation Fill or Backfill
2.1.1.3 Fill or Backfill Adjacent to Walls
2.1.2 Unsatisfactory Materials
2.1.2.1 Natural Insitu Soil
2.1.2.2 Foundation Fill or Backfill
2.1.2.3 Fill or Backfill Adjacent to Walls
2.1.2.4 Wet or Soft Materials
2.1.3 Cohesionless and Cohesive Materials
2.2 CAPILLARY WATER BARRIER

PART 3 EXECUTION

3.1 CLEARING AND GRUBBING
3.2 TOPSOIL
3.3 EXCAVATION
3.4 DRAINAGE AND DEWATERING
3.4.1 Drainage
3.4.2 Dewatering
3.5 SHORING
3.6 CLASSIFICATION OF EXCAVATION
3.7 BLASTING
3.8 UTILITY AND DRAIN TRENCHES
3.9 BORROW
3.10 EXCAVATED MATERIALS
3.11 FINAL GRADE OF SURFACES TO SUPPORT CONCRETE
3.12 OMITTED
3.13 FILLING AND BACKFILLING
3.13.1 General
3.13.2 Placement
3.13.3 Moisture Content

3.13.4 Compaction
3.14 TESTING
3.14.1 Types of Tests
3.14.1.1 Classification Tests
3.14.1.2 Moisture Content
3.14.1.3 Compaction Tests
3.14.1.4 Field Density Tests
3.14.2 Tests Required on Material Prior to Placement
3.14.2.1 General
3.14.2.2 Classification Tests
3.14.2.3 Compaction Tests
3.14.2.4 Moisture Content Tests
3.14.3 Tests Required During Placement
3.14.3.1 Field Density Tests
3.14.3.2 Moisture Content
3.14.3.3 Optimum Moisture and Laboratory Maximum Density
3.14.3.4 Time and Location of Tests
3.14.3.5 Field Density Control
3.14.4 Compaction Control
3.14.5 Compaction Procedure
3.14.5.1 General
3.14.5.2 One-Point Compaction Method
3.14.5.3 Two-Point Compaction Method
3.15 CAPILLARY WATER BARRIER
3.16 GRADING
3.17 SPREADING TOPSOIL
3.18 PROTECTION

-- End of Section Table of Contents --

CEGS-02315 (August 1998)

SECTION 02315

EXCAVATION, FILLING AND BACKFILLING FOR BUILDINGS
08/98

PART 1 GENERAL

1.1 REFERENCES

The publications listed below form a part of this specification to the extent referenced. The publications are referred to in the text by basic designation only.

AMERICAN SOCIETY FOR TESTING AND MATERIALS (ASTM)

ASTM C 33	(1997) Concrete Aggregate
ASTM D 422	(1963; R 1990) Particle-Size Analysis of Soils
ASTM D 1140	(1992) Amount of Material in Soils Finer Than the No. 200 (75-Micrometer) Sieve
ASTM D 1556	(1990; R 1996) Density and Unit Weight of Soil in Place by the Sand-Cone Method
ASTM D 1557	(1991) Laboratory Compaction Characteristics of Soil Using Modified Effort (56,000 ft-lbf/cu. ft. (2,700 kN-m/cu.m.))
ASTM D 2216	(1992) Laboratory Determination of Water (Moisture) Content of Soil, and Rock
ASTM D 2487	(1993) Classification of Soils for Engineering Purposes (Unified Soil Classification System)
ASTM D 4318	(1995a) Liquid Limit, Plastic Limit, and Plasticity Index of Soils

1.2 DEFINITIONS

1.2.1 Degree of Compaction

Degree of compaction is expressed as a percentage of the maximum density obtained by the test procedure presented in ASTM D 1557 abbreviated as percent laboratory maximum density.

1.2.2 Maximum Dry Density

The maximum dry density is expressed as the maximum density obtained when the soil is compacted in accordance with ASTM D 1557, abbreviated as laboratory maximum dry density.

1.2.3 Optimum Moisture Content

The optimum moisture content is the moisture content corresponding to the maximum dry density obtained by the test procedure presented in ASTM D 1557.

1.2.4 Subsurface Data

Logs of soil test borings are shown on the drawings. These data represent the best subsurface information available; however, variations may exist in the subsurface between boring locations. The water level data indicate only the conditions at the particular time or times the information was obtained and may not indicate variations such as those caused by periods of drought or increased rainfall, seasonal fluctuations in rainfall, changes in the surface drainage pattern, or application of irrigation water.

1.2.5 Related Work

1.2.5.1 Site Grading and Excavation and Backfilling for Utilities

Site grading and excavation and backfilling for utilities beyond the 5-foot building line are covered under Section 02300 EARTHWORK and Section 02316 EXCAVATION, TRENCHING, AND BACKFILLING FOR UTILITIES SYSTEMS.

1.2.5.2 Termite Protection

Termite protection is specified under Section 02364 TERMITICIDE TREATMENT MEASURES FOR SUBTERRANEAN TERMITE CONTROL.

1.3 SUBMITTALS

Government approval is required for submittals with a "G" designation; submittals not having a "G" designation are for information only. When used, a designation following the "G" designation identifies the office that will review the submittal for the Government. The following shall be submitted in accordance with Section 01330 SUBMITTAL PROCEDURES:

SD-05 Design Data

Testing; G|RE.

Testing facilities for the performance of laboratory soil tests must be approved by the Contracting Officer prior to work being performed.

SD-06 Test Reports

Field Density Tests. Testing of Fill and Backfill Materials.

Copies of all laboratory and field test reports within 24 hours of the completion of the test. Each report shall be properly identified. Test methods used and compliance with specified test standards shall be described. Summary sheets specified herein shall be submitted as indicated.

Inspection, Equipment and Corrective Action Reports.

Copies of inspection reports, equipment specifications, and records of corrective action taken shall be submitted.

SD-07 Certificates

Certificates of Compliance.

Certificates of compliance indicating conformance with specified requirements shall be furnished for capillary water barrier materials.

PART 2 PRODUCTS

2.1 MATERIALS

2.1.1 Satisfactory Materials

2.1.1.1 Natural Insitu Soil

Satisfactory materials for natural insitu soil supporting building foundations and/or slabs shall be limited to materials classified in ASTM D 2487 as GW, GP, GM, GP-GM, GW-GM, GC, GP-GC, GM-GC, SW, SP, SM, SW-SM, SC,SW-SC, SP-SM, SP-SC, CL, ML, CL-ML, CH, MH, and shall be free of trash, debris, roots or other organic matter, frozen material, and stones larger than 3 inches in any dimension.

2.1.1.2 Foundation Fill or Backfill

Satisfactory material for fill or backfill supporting building foundations and/or slabs shall be limited to materials classified in ASTM D 2487 as GW, GP, GM, GP-GM, GW-GM, GC, GP-GC, GM-GC, SW, SP, SM, SW-SM, SC,SW-SC, SP-SM, SP-SC, CL, ML, CL-ML, and shall be free of trash, debris, roots or other organic matter, frozen material, and stones larger than 3 inches in any dimension.

2.1.1.3 Fill or Backfill Adjacent to Walls

Satisfactory materials for fill or backfill adjacent to basement or retaining walls shall be limited to cohesionless, free draining materials classified in ASTM D 2487 as GW, GP, SW, SP, and SP-SM, and shall be free of trash, debris, roots or other organic matter, frozen material, and stones larger than 3 inches in any dimension.

2.1.2 Unsatisfactory Materials

2.1.2.1 Natural Insitu Soil

Unsatisfactory materials for fill or backfill supporting building foundations and/or slabs shall be materials classified in ASTM D 2487 as Pt, OH and OL and any other materials not defined as satisfactory. The Contracting Officer shall be notified of any contaminated materials.

2.1.2.2 Foundation Fill or Backfill

Unsatisfactory material for fill or backfill supporting building foundations and/or slabs shall be materials classified in ASTM D 2487 as Pt, OH, OL, CH and MH.

2.1.2.3 Fill or Backfill Adjacent to Walls

Unsatisfactory materials for fill or backfill adjacent to walls shall be materials classified in accordance with ASTM D 2487 as Pt, OH, OL, GC, SC, CL, CH, ML and MH, GP-GM, GW-GM, GC, GP-GC, GM-GC, SW-SM, SC, SW-SC, SP-SC, CL, ML, CL-ML.

2.1.2.4 Wet or Soft Materials

Materials determined by the Contracting Officer as too wet or too soft to provide a stable subgrade, foundation, or fill will be classified as unsatisfactory regardless of classification. However, if such materials do meet the appropriate ASTM D 2487 classification, the Contractor shall at no additional cost to the Government, recondition the materials.

2.1.3 Cohesionless and Cohesive Materials

Cohesionless materials include materials classified in ASTM D 2487 as GW, GP, SW, and SP. Cohesive materials include materials classified as GC,GP-GC, GM-GC, SW-SC, SP-SC, SC, ML, CL, CL-ML, MH, and CH and the unsatisfactory organic materials Pt, OL and OH. Materials classified as GM, GP-GM, GW-GM, SM, SW-SM, and SP-SM will be identified as cohesionless only when the fines have a plasticity index of zero; otherwise they will be considered cohesive.

2.2 CAPILLARY WATER BARRIER

Capillary water barrier shall consist of clean, crushed, nonporous stone, crushed gravel, or uncrushed gravel conforming to the requirements of ASTM C 33 for coarse aggregate grading size 57, 67, 7, or 78.

PART 3 EXECUTION

3.1 CLEARING AND GRUBBING

Clearing and grubbing is specified in Section 02230 CLEARING AND GRUBBING.

3.2 TOPSOIL

Topsoil shall be stripped to full depth below existing grade within the designated excavations and grading lines. Topsoil shall be spread on areas already graded and prepared for topsoil, or transported and deposited in stockpiles convenient to areas that are to receive topsoil later, or at locations indicated or specified. Excess topsoil shall be disposed of as specified for excess excavated material.

3.3 EXCAVATION

Excavation shall conform to the dimensions and elevations indicated for each building, structure, and footing except as specified, and shall include trenching for utility and foundation drainage systems to a point 5 feet beyond the building line of each building and structure, excavation for outside grease interceptors and all work incidental thereof. Excavation shall extend a sufficient distance from walls and footings to allow for placing and removal of forms. Excavations below indicated depths will not be permitted except to remove unsatisfactory material. Unsatisfactory material encountered below the grades shown shall be removed as directed and replaced with satisfactory material; and payment will be made in conformance with the CHANGES clause of the CONTRACT CLAUSES. Satisfactory material removed below the depths indicated, without specific direction of the Contracting Officer, shall be replaced, at no additional cost to the Government, with satisfactory materials to the indicated excavation grade. Satisfactory material shall be placed and compacted as specified in paragraph FILLING AND BACKFILLING. Determination of elevations and measurements of approved overdepth excavation of

unsatisfactory material below grades indicated shall be done under the direction of the Contracting Officer.

3.4 DRAINAGE AND DEWATERING

3.4.1 Drainage

Surface water shall be directed away from excavation and construction sites to prevent erosion and undermining of foundations. Diversion ditches, dikes and grading shall be provided and maintained as necessary during construction. Excavated slopes and backfill surfaces shall be protected to prevent erosion and sloughing. Excavation shall be performed so that the site, the area immediately surrounding the site, and the area affecting operations at the site shall be continually and effectively drained.

3.4.2 Dewatering

Groundwater flowing toward or into excavations shall be controlled to prevent sloughing of excavation slopes and walls, boils, uplift and heave in the excavation and to eliminate interference with orderly progress of construction. French drains, sumps, ditches or trenches will not be permitted within 3 feet of the foundation of any structure, except with specific written approval, and after specific contractual provisions for restoration of the foundation area have been made. Control measures shall be taken by the time the excavation reaches the water level in order to maintain the integrity of the in situ material. While the excavation is open, the water level shall be maintained continuously, at least 3 feet below the working level. Refer to general notes on Plate C-3 of contract drawings regarding "perched water" conditions at project site.

3.5 SHORING

Shoring, including sheet piling, shall be furnished and installed as necessary to protect workmen, banks, adjacent paving, structures, and utilities. Shoring, bracing, and sheeting shall be removed as excavations are backfilled, in a manner to prevent caving.

3.6 CLASSIFICATION OF EXCAVATION

Excavation will be unclassified regardless of the nature of material encountered.

3.7 BLASTING

Blasting will not be permitted.

3.8 UTILITY AND DRAIN TRENCHES

Trenches for underground utilities systems and drain lines shall be excavated to the required alignments and depths. The bottoms of trenches shall be graded to secure the required slope and shall be tamped if necessary to provide a firm pipe bed. Recesses shall be excavated to accommodate bells and joints so that pipe will be uniformly supported for the entire length.

3.9 BORROW

Where satisfactory materials are not available in sufficient quantity from required excavations, approved materials shall be obtained as specified in

Section 02300 EARTHWORK.

3.10 EXCAVATED MATERIALS

Satisfactory excavated material required for fill or backfill shall be placed in the proper section of the permanent work required under this section or shall be separately stockpiled if it cannot be readily placed. Satisfactory material in excess of that required for the permanent work and all unsatisfactory material shall be disposed of as specified in Section 02300 EARTHWORK. No satisfactory material shall be wasted or used for the convenience of the Contractor unless so authorized. Stockpiles and wasted materials shall be placed, graded, and shaped for proper drainage, giving due consideration to drainage from adjacent properties.

3.11 FINAL GRADE OF SURFACES TO SUPPORT CONCRETE

Excavation to final grade shall not be made until just before the capillary water barrier or concrete is to be placed. All surfaces shall be protected from erosion resulting from ponding or flow of water.

3.12 OMITTED

3.13 FILLING AND BACKFILLING

3.13.1 General

Filling and backfilling shall not begin until construction below finish grade has been approved, underground utilities systems have been inspected, tested and approved, forms removed and the excavation cleaned of trash and debris. Backfill shall not be placed in areas that are wet, muddy, contain organic materials or are otherwise unacceptable to the Contracting Officer. Satisfactory materials shall be used in bringing fills and backfills to the lines and grades indicated and for replacing unsatisfactory materials. Satisfactory material shall be free from roots and other organic matter, trash, debris, frozen materials, and stones larger than 3 inches in any dimension. Where pipe and or utility lines are coated or wrapped for protection against corrosion, the backfill material up to an elevation of 2 feet above sewer lines and 1 foot above other utility lines shall be free from stones larger than 1 inch in any dimension.

3.13.2 Placement

Satisfactory materials shall be placed in horizontal layers not exceeding 8 inches in loose thickness, or 4 inches in loose thickness where hand-operated compactors are used. After placing, each layer shall be plowed, disked, or otherwise broken up, moistened or aerated as necessary, thoroughly mixed and compacted as specified. Backfill shall be brought to the indicated finish grade. Heavy equipment for spreading and compacting backfill shall not be operated closer to foundation or retaining walls than a distance equal to the height of backfill above the top of footing; the area remaining shall be compacted in layers not more than 4 inches in loose thickness with power-driven hand tampers suitable for the material being compacted. Backfill shall be placed carefully around pipes or tanks to avoid damage to coatings, wrappings, or tanks. Backfill shall not be placed against foundation walls prior to 7 days after completion of each side of the wall and sloped to drain away from the wall. Prior to compaction, each layer shall be thoroughly and uniformly blended throughout its entire thickness by discing.

3.13.3 Moisture Content

Satisfactory materials in each layer of fill or backfill shall contain the amount of moisture within the limits specified below. Materials that are not within the specified limits after compaction shall be reworked regardless of density. The moisture content after compaction shall be as uniform as practicable throughout any one layer and shall be within the limits of 2.5 percentage points above optimum moisture content and 2.5 percentage points below optimum moisture content. Materials which are too wet shall be disced, harrowed, plowed, bladed, or otherwise manipulated to reduce the moisture content to within the specified limits. Materials which are too dry shall be broken up, sprinkled, and thoroughly mixed to bring the moisture content uniformly up to within specified limits. In the event that materials reach the fill which are not within the limits of moisture content specified above, the Contractor shall either adjust the moisture content to bring it within the specified limits or remove it from the fill.

3.13.4 Compaction

Compaction shall be accomplished by sheepsfoot roller, pneumatic-tired rollers, smooth-drum vibratory rollers or other approved equipment well suited to the soil being compacted. Generally, sheepsfoot rollers are best suited for compacting cohesive material while smooth-drum vibratory rollers are best suited for compacting cohesionless materials. In areas inaccessible to heavy equipment, or where in the opinion of the Contracting Officer, use of heavy equipment may cause damage to pipes, conduits, or structures, approved power-driven hand tampers suitable for the material being compacted shall be used. Each layer of fill and backfill shall be compacted to not less than the percentage of maximum density specified below.

	Percent Laboratory Maximum density
Fill, Embankment, and Backfill	
Under structures, steps, paved areas, and in trenches	90
Beside structures, footings, and walls	90
Under sidewalks and grassed areas	85
Subgrade (Top of Fill, Embankment, and Backfill)	
Under building slabs, steps, and paved areas, top 12 inches	95
Under footings, top 12 inches	90
Under sidewalks and grassed areas, top 6 inches	85
Subgrade (Undisturbed Native Soil or Cut)	

	Percent Laboratory Maximum density
Under building slabs, steps, and paved areas, top 6 inches	95
Under footings, top 6 inches	90
Under sidewalks and grased areas, top 6 inches	85

Approved compacted subgrades that are disturbed by the Contractor's operations or adverse weather shall be scarified and recompacted to the required density prior to further construction thereon. Recompaction over underground utilities and heating lines shall be by hand tamping. For compacted subgrades and/or any lift of fill or backfill that fails to meet the specified density and/or moisture requirements, the entire subgrade and/or entire lift of fill shall be broken up to a minimum depth of 8 inches, pulverized, the moisture content adjusted as necessary, and recompacted to the specified density, even if this action requires the removal and replacement of subsequently placed satisfactory lifts of fill. Tests on recompacted areas shall be performed to determine conformance with specification requirements. Lifts of fill placed without being field density tested will not be accepted as satisfactory under any circumstances.

3.14 TESTING

Testing shall be the responsibility of the Contractor and shall be performed by an approved commercial testing laboratory at no additional cost to the Government. Three copies of test results shall be included with the Contractor's daily construction quality control reports. Inspections and test results shall be certified by a registered professional civil engineer. These certifications shall state that the tests and observations were performed by or under the direct supervision of the engineer and that the results are representative of the materials or conditions being certified by the tests.

3.14.1 Types of Tests

3.14.1.1 Classification Tests

Classification of soils shall be determined in accordance with ASTM D 2487.

a. Liquid Limit and Plasticity Index: Liquid limit and plasticity index shall be determined in accordance with ASTM D 4318.

b. Sieve Analysis: Sieve analysis (wash No. 200, without hydrometer) shall be performed in accordance with ASTM D 422 and ASTM D 1140.

3.14.1.2 Moisture Content

Moisture content shall be determined in accordance with ASTM D 2216.

3.14.1.3 Compaction Tests

Compaction tests shall be performed by the test procedure presented in ASTM D 1557. Adequate testing shall be conducted to establish at least five

points with at least one point falling within plus or minus 1.5 percentage points of the plotted optimum moisture content.

3.14.1.4 Field Density Tests

Field in-place densities shall be determined by the sand displacement method in accordance with ASTM D 1556. The Contracting Officer reserves the right to direct the locations where field density tests are to be performed. SAS Form 865 shall be used for recording results of field density tests and submitted with the daily construction quality control reports. Results of density tests shall be maintained on CESAS Form 1177 - Summary of Field Density Tests and an updated copy submitted each week. The Contracting Officer will furnish Government forms to the Contractor.

3.14.2 Tests Required on Material Prior to Placement

3.14.2.1 General

All material from required excavations and borrow shall be tested prior to incorporation into the permanent work. The tests shall be performed on samples representative of the various materials to be utilized. Samples shall be carefully selected to represent the full range of materials to be used as fill and/or backfill. The following minimum number of tests shall be performed on the materials prior to the placement of the materials in the work. Additional tests of these types shall be performed when materials of different classification or compaction characteristics are encountered to determine the properties of the materials. The Contracting Officer reserves the right to direct additional testing as required.

3.14.2.2 Classification Tests

Classification tests shall be performed to determine the acceptability of materials in accordance with paragraph MATERIALS. Such tests on materials proposed for use as fill and/or backfill shall be performed prior to their use. Sufficient classification tests shall be performed to define the full range of all materials proposed for use. A minimum of two classification tests shall be performed on each material classified as satisfactory for use. The Contracting Officer may at any time require additional classification tests to confirm material acceptability.

3.14.2.3 Compaction Tests

Compaction tests shall be performed prior to commencement of construction in order to determine the moisture-density relationships of all satisfactory materials proposed for use as fill and/or backfill. For each compaction test performed, an associated or companion classification test and moisture content test shall be performed. Compaction tests shall be performed in sufficient number to establish the full range of maximum dry density and optimum water content. A minimum of 18 compaction tests shall be performed on materials classified as satisfactory for use. Samples for these tests shall not be obtained from the same locations. The Contracting Officer reserves the right to direct where samples for additional compaction tests are obtained. In the event that the compaction characteristics of materials having the same classification vary appreciably, additional compaction tests shall be performed.

3.14.2.4 Moisture Content Tests

Moisture content tests shall be performed on all materials proposed for use

as fill and/or backfill to determine their suitability for use in accordance with paragraph Moisture Content. Moisture content tests shall be performed in sufficient number to determine the full range of moisture contents. Moisture content test shall be performed for each compaction test and as required to determine acceptability of material prior to placement. Not less than two moisture content tests shall be performed on each material classified as satisfactory for use.

3.14.3 Tests Required During Placement

3.14.3.1 Field Density Tests

Acceptance of the compacted materials shall be determined by the results of field in-place density tests. Density tests in randomly selected locations shall be performed in the material and at the minimum frequency specified below:

Material Type	Location of Material	Minimum Test Frequency
Fill, embankment and backfill	Beneath structures, to the 5-foot building line	One test per lift per each increment or fraction of 5000 square feet
Fill and backfill	Areas beside structures, footings, walls, and areas enclosed by grade beams that are compacted by hand operated compaction equipment	One test per foot of depth per each increment or fraction of 200 square feet or for each 50 linear feet of long narrow (less than 3 feet wide) fills 50 feet or more in length
Subgrade	Under building slabs on grade and paved areas	One test per each increment or fraction of 2500 square feet
Subgrade	Under footings	One test per each column footing and for each increment or fraction of 100 linear feet of wall footings

3.14.3.2 Moisture Content

In the stockpile(s), excavation, or borrow areas, a minimum of two tests, with one-point or two-point compaction tests, as appropriate, shall be performed per day per type of material or source of material being placed during stable weather conditions. During unstable weather, tests shall be made as dictated by the local conditions to ensure the moisture content of

the placed materials are within the specified limits.

3.14.3.3 Optimum Moisture and Laboratory Maximum Density

One representative test shall be performed per 500 cubic yards of fill, embankment and backfill, or when any change in material occurs which may affect the optimum moisture content or laboratory maximum density.

3.14.3.4 Time and Location of Tests

The Government reserves the right to specify the location of any test. Whenever there is doubt as to the adequacy of the testing or validity of results, the Contracting Officer may direct that additional tests be performed, at no additional cost to the Government. The field density tests shall be performed at times and locations which will assure the specified compaction is being obtained throughout each lift for all materials placed. Additional field density tests shall be performed in areas where the Contracting Officer determines there is reason to doubt the adequacy of the natural subgrade.

3.14.3.5 Field Density Control

The results of field density tests shall be compared to results of compaction tests performed as required elsewhere in these specifications by the use of the appropriate procedures described in the following paragraphs.

3.14.4 Compaction Control

For fine grained (clayey and silty) soils and for sands with appreciable fines such that normal shaped compaction curves are obtained, results of all compaction tests shall be plotted on a common plot as a family of curves. For each field density test performed, a one-point compaction test, with additional points as needed, shall be performed on the same material on which the field density test was conducted. The one-point compaction test shall be performed on the dry side of the optimum moisture content. For comparison of field density data to the proper laboratory compaction test results, the procedures for the one-point and/or two-point compaction control methods as described in paragraph Compaction Procedure, shall be used. Compaction curves plotted on the family of curves shall be of such a scale that the optimum moisture content can be interpreted to the nearest 0.1 percent and the maximum dry density can be interpreted to the nearest 0.1 pcf. When a one-point test plots outside the range of the family of curves, an additional five-point compaction test shall be performed.

3.14.5 Compaction Procedure

3.14.5.1 General

The following paragraphs describe methods of relating field density data to desired or specified values. Compaction control of soils requires comparison of fill water content and/or dry density values obtained in field density tests with optimum water content and/or maximum dry density. At a minimum, control shall be in accordance with the One-Point Compaction Method. Where conditions require, the Two-Point Compaction Method shall be used.

3.14.5.2 One-Point Compaction Method

The material from the field density test is allowed to dry to a water content on the dry side of estimated optimum, and then compacted using the same equipment and procedures used in the five-point compaction test. Thorough mixing is required to obtain uniform drying; otherwise, results obtained may be erroneous. The water content and dry density of the compacted sample are determined and then used to estimate its optimum water content and maximum dry density as illustrated in Figure 1 at the end of this section. In Figure 1, the line of optimums is well defined and the compaction curves are approximately parallel to each other, consequently, the one-point compaction method could be used with a relatively high degree of confidence. However, in Figure 2 at the end of this section, the curves are not parallel to each other and in several instances will cross if extended on the dry side. Consequently, the correct curve cannot be determined from the one-point method; therefore, the two-point compaction method should be used. The one-point method should be used only when the data define a relatively good line of optimums.

3.14.5.3 Two-Point Compaction Method

In the two-point test, one sample of material from the location of the field density test is compacted at the fill water content if thought to be at or on the dry side of optimum water content (otherwise, reduced by drying to this condition) using the same equipment and procedures used in the five-point compaction test. A second sample of material is allowed to dry back about 2 to 3 percentage points dry of the water content of the first sample and then compacted in the same manner. At least one point shall fall within 3 percent of the line of optimus. After compaction, the water contents and dry densities for the two samples are determined. The results are used to identify the appropriate compaction curve for the material being tested as shown in Figure 2 at the end of this section. The data shown in Figure 2 warrant the use of the two-point compaction test because the five-point compaction curves are not parallel. Using point A only, as in the one-point test method, would result in appreciable error as the shape of the curve would not be defined. The estimated compaction curve can be more accurately defined by two compaction points.

3.15 CAPILLARY WATER BARRIER

Capillary water barrier under concrete floor and area-way slabs on grade shall be placed directly on the subgrade and shall be compacted with a minimum of two passes of a hand-operated plate-type vibratory compactor.

3.16 GRADING

Areas within 5 feet outside of each building and structure line shall be constructed true-to-grade, shaped to drain, and shall be maintained free of trash and debris until final inspection has been completed and the work has been accepted.

3.17 SPREADING TOPSOIL

Areas outside the building lines from which topsoil has been removed shall be topsoiled. The surface shall be free of materials that would hinder planting or maintenance operations. The compacted subgrade soil shall be scarified to a depth of 2 inches by disking or plowing for the bonding of topsoil with the subsoil. Topsoil shall then be uniformly spread to a thickness of 4 inches and graded to the elevations and slopes shown and left free of surface irregularities. Topsoil shall be compacted by one pass of a cultipacker, roller, or other approved equipment weighing 100 to

160 pounds per linear foot of roller. Topsoil shall not be placed when the subgrade is frozen, excessively wet, extremely dry, or in a condition otherwise detrimental to seeding, planting, or proper grading.

3.18 PROTECTION

Settlement or washing that occurs in graded, topsoiled, or backfilled areas prior to acceptance of the work, shall be repaired and grades reestablished to the required elevations and slopes.

-- End of Section --

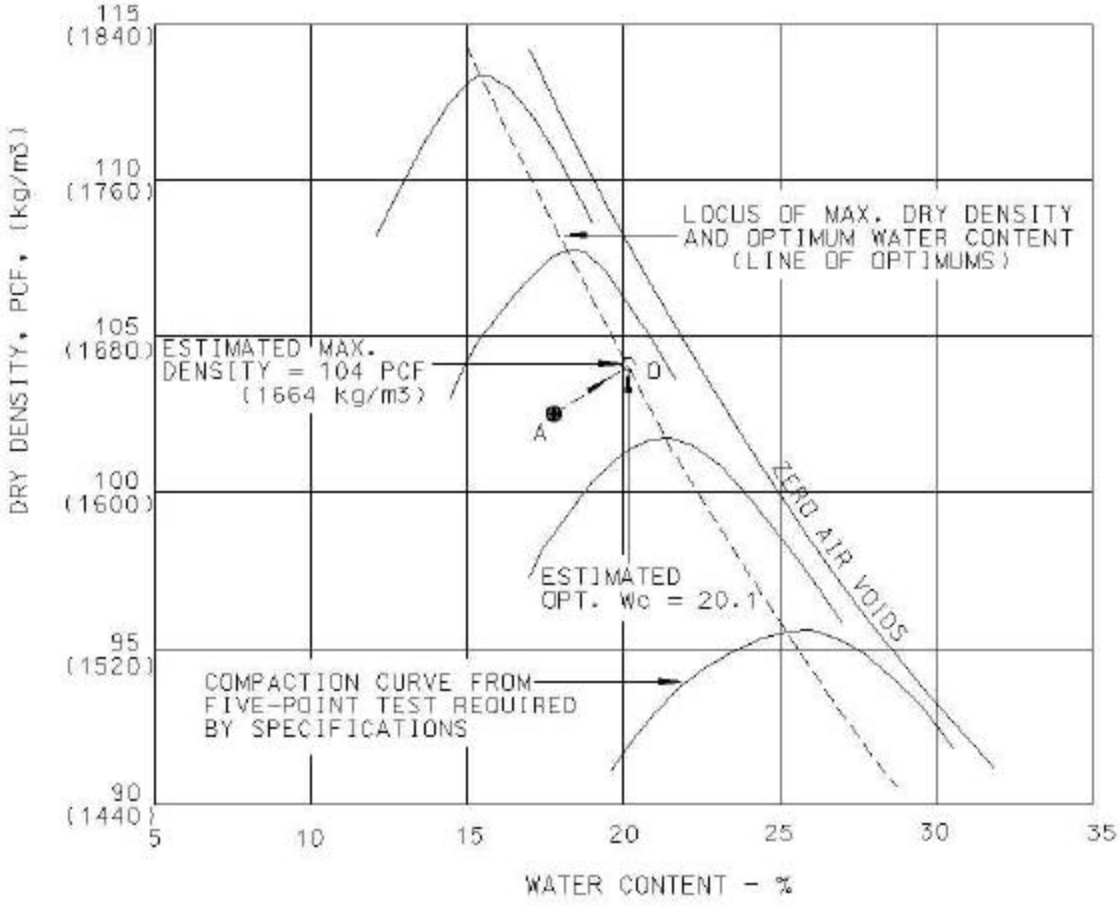

PROCEDURE:

1. Point A is the result of a one-point compaction test on material from field density test. This point must be on the dry side of optimum water content.

2. Point O is the estimated optimum water content and maximum density of the fill material based on a projection of point A approximately parallel to the adjacent compaction curves.

3. Point A must plot within 3 percent of the line of optimums.

Figure 1. Illustration of one-point compaction method.

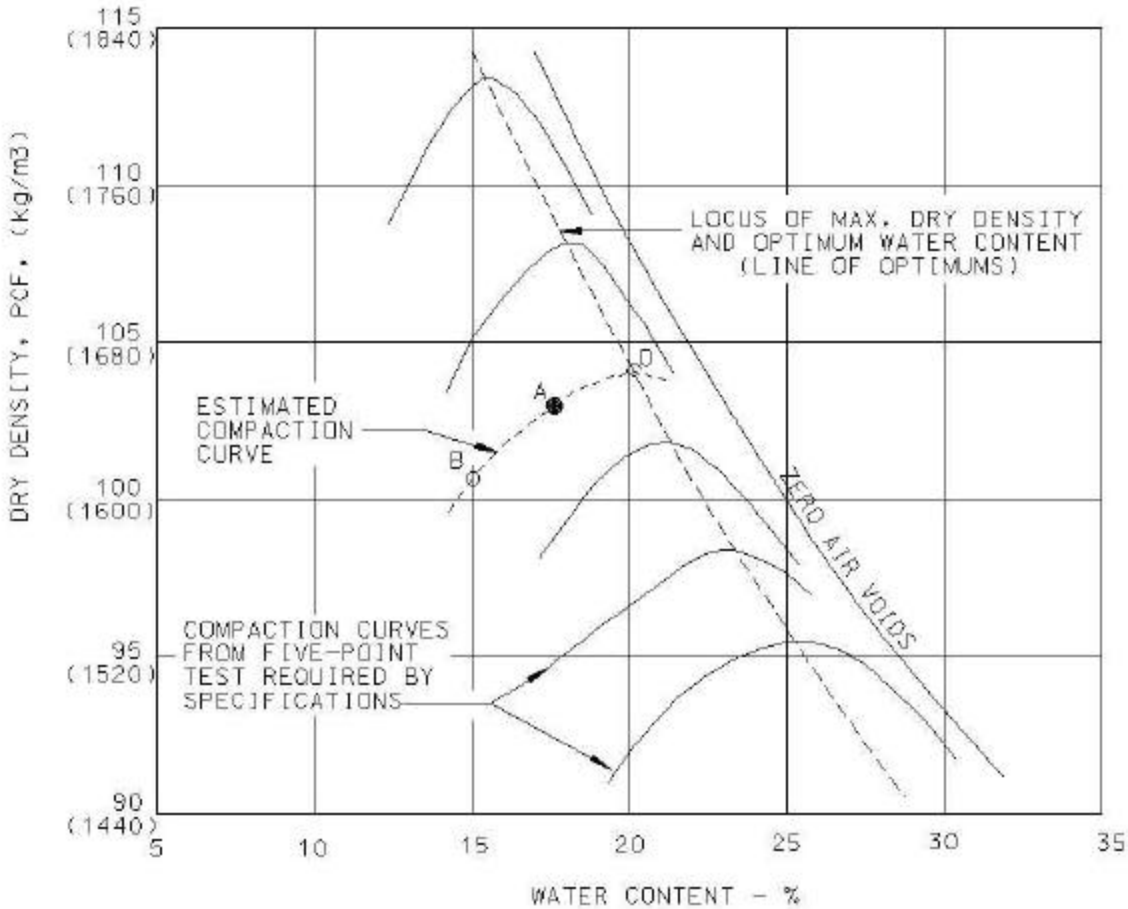

PROCEDURE:

1. Points A and B are results of a two-point compaction test on material from field density test. Points A and B must be on the dry side of optimum water content.

2. The estimated compaction curve based on Points A and B establishes Point O on the locus, which is the estimated maximum dry density and optimum water content of the fill material.

3. One point must plot within 3 percent of the line of optimums.

Figure 2. Illustration of two-point compaction method.

SECTION TABLE OF CONTENTS

DIVISION 02 - SITE WORK

SECTION 02316

EXCAVATION, TRENCHING, AND BACKFILLING FOR UTILITIES SYSTEMS

11/97

PART 1 GENERAL

1.1 REFERENCES
1.2 OMITTED
1.3 DEGREE OF COMPACTION
1.4 SUBMITTALS

PART 2 PRODUCTS

2.1 MATERIALS
2.1.1 Satisfactory Materials
2.1.2 Unsatisfactory Materials
2.1.3 Cohesionless and Cohesive Materials
2.1.4 Omitted
2.1.5 Omitted
2.1.6 Unstable Material
2.1.7 Select Granular Material
2.1.8 Initial Backfill Material
2.2 PLASTIC MARKING TAPE
2.3 TRACER WIRE

PART 3 EXECUTION

3.1 EXCAVATION
3.1.1 Trench Excavation Requirements
3.1.1.1 Bottom Preparation
3.1.1.2 Omitted
3.1.1.3 Removal of Unstable Material
3.1.1.4 Excavation for Appurtenances
3.1.1.5 Jacking, Boring, and Tunneling
3.1.2 Stockpiles
3.2 BACKFILLING AND COMPACTION
3.2.1 Trench Backfill
3.2.1.1 Omitted
3.2.1.2 Replacement of Unstable Material
3.2.1.3 Bedding and Initial Backfill
3.2.1.4 Final Backfill
3.2.2 Backfill for Appurtenances
3.3 SPECIAL REQUIREMENTS
3.3.1 Gas Distribution
3.3.2 Water Lines
3.3.3 Heat Distribution System
3.3.4 Electrical Distribution System
3.3.5 Plastic Marking Tape
3.3.6 Tracer Wire
3.4 TESTING
3.4.1 Testing Facilities
3.4.2 Testing of Backfill Materials

3.4.3 Field Density Tests
3.4.3.1 Compaction Control
3.4.4 Displacement of Sewers

-- End of Section Table of Contents --

CEGS-02316 (November 1997)

Includes changes through Notice 1 (July 1998)

SECTION 02316

EXCAVATION, TRENCHING, AND BACKFILLING FOR UTILITIES SYSTEMS
11/97

PART 1 GENERAL

1.1 REFERENCES

The publications listed below form a part of this specification to the extent referenced. The publications are referred to in the text by basic designation only.

AMERICAN SOCIETY FOR TESTING AND MATERIALS (ASTM)

ASTM C 136	(1996) Sieve Analysis of Fine and Coarse Aggregates
ASTM D 422	(1963; R 1990) Particle-Size Analysis of Soils
ASTM D 1140	(1992) Amount of Material in Soils Finer Than the No. 200 (75-Micrometer) Sieve
ASTM D 1556	(1990; R 1996) Density and Unit Weight of Soil in Place by the Sand-Cone Method
ASTM D 1557	(1991) Laboratory Compaction Characteristics of Soil Using Modified Effort (56,000 ft-lbf/cu. ft. (2,700 kN-m/cu. m.))
ASTM D 2487	(1993) Classification of Soils for Engineering Purposes (Unified Soil Classification System)

1.2 OMITTED

1.3 DEGREE OF COMPACTION

Degree of compaction shall be expressed as a percentage of the maximum density obtained by the test procedure presented in ASTM D 1557.

1.4 SUBMITTALS

Government approval is required for submittals with a "G" designation; submittals not having a "G" designation are for information only. When used, a designation following the "G" designation identifies the office that will review the submittal for the Government. The following shall be submitted in accordance with Section 01330 SUBMITTAL PROCEDURES:

SD-04 Samples

Tracer Wire; GA|RE

Sample of tracer wire, including manufacturer's descriptive technical literature, specifications, and installation instructions. Sample and information shall be submitted at least 60 days prior to the initial installation of any tracer wire.

SD-06 Test Reports

Field Density Tests. Testing of Fill and Backfill Materials.

Copies of all laboratory and field test reports within 24 hours of the completion of the test.

SD-07 Certificates

Testing; G|RE

Qualifications of the commercial testing laboratory.

PART 2 PRODUCTS

2.1 MATERIALS

2.1.1 Satisfactory Materials

Satisfactory materials shall comprise any materials classified by ASTM D 2487 as GW, GP, GM, GP-GM, GW-GM, GC, GP-GC, GM-GC, SW, SP, SM, SW-SM, SC, SW-SC, SP-SM, SP-SC, CL, ML, and CL-ML.

2.1.2 Unsatisfactory Materials

Materials which do not comply with the requirements for satisfactory materials are unsatisfactory. Unsatisfactory materials also include man-made fills, trash, refuse, or backfills from previous construction. Unsatisfactory material also includes material classified as satisfactory which contains root and other organic matter, frozen material, and stones larger than 3 inches. The Contracting Officer shall be notified of any contaminated materials.

2.1.3 Cohesionless and Cohesive Materials

Cohesionless materials include materials classified in ASTM D 2487 as GW, GP, SW, and SP. Cohesive materials include materials classified as GC, GP-GC, GM-GC, SW-SC, SP-SC, SC, ML, CL, CL-MH, MH, and CH and the unsatisfactory organic materials Pt, OL and OH. Materials classified as GM, GP-GM, GW-GM, SM, SW-SM, and SP-SM will be identified as cohesionless only when the fines have a plasticity index of zero; otherwise they will be considered cohesive.

2.1.4 Omitted
2.1.5 Omitted

2.1.6 Unstable Material

Unstable material shall consist of materials too wet to properly support the utility pipe, conduit, or appurtenant structure.

2.1.7 Select Granular Material

Select granular material shall consist of well-graded sand, gravel, crushed gravel, crushed stone or crushed slag composed of hard, tough and durable particles, and shall contain not more than 10 percent by weight of material passing a No. 200 mesh sieve and no less than 95 percent by weight passing the l inch sieve. The maximum allowable aggregate size shall be 2 inches, or the maximum size recommended by the pipe manufacturer, whichever is smaller.

2.1.8 Initial Backfill Material

Initial backfill shall consist of select granular material or satisfactory materials free from rocks 2 inches or larger in any dimension or free from rocks of such size as recommended by the pipe manufacturer, whichever is smaller. When the pipe is coated or wrapped for corrosion protection, the initial backfill material shall be free of stones larger than 1 inch in any dimension or as recommended by the pipe manufacturer, whichever is smaller.

2.2 PLASTIC MARKING TAPE

Plastic marking tape shall be acid and alkali-resistant polyethylene film, 6 inches wide with minimum thickness of 0.004 inch. Tape shall have a minimum strength of 1750 psi lengthwise and 1500 psi crosswise. The tape shall be manufactured with integral wires, foil backing or other means to enable detection by a metal detector when the tape is buried up to 3 feet deep. The tape shall be of a type specifically manufactured for marking and locating underground utilities. The metallic core of the tape shall be encased in a protective jacket or provided with other means to protect it from corrosion. Tape color shall be as specified in TABLE 1 and shall bear a continuous printed inscription describing the specific utility.

TABLE 1. Tape Color

Red:	Electric
Yellow:	Gas, Oil, Dangerous Materials
Orange:	Telephone, Telegraph, Television, Police, and Fire Communications
Blue:	Water Systems
Green:	Sewer Systems

2.3 TRACER WIRE

Tracer wire shall be insulated No. 12 AWG solid copper and of a type specifically manufactured for locating underground utilities. Insulation shall be solid yellow in color. Tracer wire shall be subject to approval by the Contracting Officer.

PART 3 EXECUTION

3.1 EXCAVATION

Excavation of every description, regardless of material encountered, shall be performed to the lines and grades indicated. During excavation, material satisfactory for backfilling shall be stockpiled in an orderly manner at a distance from the banks of the trench equal to 1/2 the depth of the excavation, but in no instance closer than 2 feet. Excavated material not required or not satisfactory for backfill shall be disposed of as specified in Section 02300 EARTHWORK. Grading shall be done as may be

necessary to prevent surface water from flowing into the excavation, and any water accumulating shall be removed to maintain the stability of the bottom and sides of the excavation. Unauthorized overexcavation shall be backfilled in accordance with paragraph BACKFILLING AND COMPACTION at no additional cost to the Government.

3.1.1 Trench Excavation Requirements

The trench shall be excavated as recommended by the manufacturer of the pipe to be installed. Trench walls below the top of the pipe shall be sloped, or made vertical, and of such width as recommended in the manufacturer's installation manual. Where no manufacturer's installation manual is available, trench walls shall be made vertical, except that trench construction shall be in accordance with OHSA. Trench walls which are cut back shall be excavated to at least the angle of repose of the soil. Special attention shall be given to slopes which may be adversely affected by weather or moisture content. The trench width below the top of pipe shall not exceed 24 inches plus pipe outside diameter (O.D.) for pipes of less than 24 inches inside diameter and shall not exceed 36 inches plus pipe outside diameter for sizes larger than 24 inches inside diameter. Where recommended trench widths are exceeded, redesign, stronger pipe, or special installation procedures shall be utilized by the Contractor. The cost of redesign, stronger pipe, or special installation procedures shall be borne by the Contractor without any additional cost to the Government.

3.1.1.1 Bottom Preparation

The bottoms of trenches shall be accurately graded to provide uniform bearing and support for the bottom quadrant of each section of the pipe. Bell holes shall be excavated to the necessary size at each joint or coupling to eliminate point bearing. Stones of 3 inches or greater in any dimension, or as recommended by the pipe manufacturer, whichever is smaller, shall be removed to avoid point bearing.

3.1.1.2 Omitted

3.1.1.3 Removal of Unstable Material

Where unstable material is encountered in the bottom of the trench, such material shall be removed to the depth directed and replaced to the proper grade with select granular material as provided in paragraph BACKFILLING AND COMPACTION. When removal of unstable material is required due to the Contractor's fault or neglect in performing the work, the resulting material shall be excavated and replaced by the Contractor without additional cost to the Government.

3.1.1.4 Excavation for Appurtenances

Excavation for manholes, catch-basins, inlets, or similar structures shall be sufficient to leave at least 12 inches clear between the outer structure surfaces and the face of the excavation or support members and of sufficient size to permit the placement and removal of forms for the full length and width of structure footings and foundations as shown. Removal of unstable material shall be as specified above. When concrete or masonry is to be placed in an excavated area, special care shall be taken not to disturb the bottom of the excavation. Excavation to the final grade level shall not be made until just before the concrete or masonry is to be placed.

3.1.1.5 Jacking, Boring, and Tunneling

Unless otherwise indicated, excavation shall be by open cut except that sections of a trench may be jacked, bored, or tunneled if, in the opinion of the Contracting Officer, the pipe, cable, or duct can be safely and properly installed and backfill can be properly compacted in such sections.

3.1.2 Stockpiles

Stockpiles of satisfactory and unsatisfactory and waste materials shall be placed and graded as specified. Stockpiles shall be kept in a neat and well drained condition, giving due consideration to drainage at all times. The ground surface at stockpile locations shall be cleared, grubbed, and sealed by rubber-tired equipment, excavated satisfactory and unsatisfactory materials shall be separately stockpiled. Stockpiles of satisfactory materials shall be protected from contamination which may destroy the quality and fitness of the stockpiled material. If the Contractor fails to protect the stockpiles, and any material becomes unsatisfactory, such material shall be removed and replaced with satisfactory material from approved sources at no additional cost to the Government. Locations of stockpiles shall be subject to prior approval of the Contracting Officer.

3.2 BACKFILLING AND COMPACTION

Backfill material shall consist of satisfactory material, select granular material, or initial backfill material as required. Backfill shall be placed in layers not exceeding 6 inches loose thickness for compaction by hand operated machine compactors, and 8 inches loose thickness for other than hand operated machines, unless otherwise specified. Each layer shall be compacted to at least 90 percent maximum density, unless otherwise specified.

3.2.1 Trench Backfill

Trenches shall be backfilled to the grade shown.

3.2.1.1 Omitted

3.2.1.2 Replacement of Unstable Material

Unstable material removed from the bottom of the trench or excavation shall be replaced with select granular material placed in layers not exceeding 6 inches loose thickness.

3.2.1.3 Bedding and Initial Backfill

Initial backfill material shall be placed and compacted with approved tampers to a height of at least 1 foot above the utility pipe or conduit. The backfill shall be brought up evenly on both sides of the pipe for the full length of the pipe. Care shall be taken to ensure thorough compaction of the fill under the haunches of the pipe.

3.2.1.4 Final Backfill

The remainder of the trench, except for special materials for roadways, railroads and airfields, shall be filled with satisfactory material. Backfill material shall be placed and compacted as follows:

a. Roadways, Railroads, and Airfields: Backfill shall be placed up to the elevation at which the requirements in Section 02300

EARTHWORK control. Water flooding or jetting methods of compaction will not be permitted.

b. Sidewalks, Turfed or Seeded Areas and Miscellaneous Areas: Backfill shall be deposited in layers of a maximum of 12 inches loose thickness, and compacted to 85 percent maximum density. Compaction by water flooding or jetting will not be permitted. This requirement shall also apply to all other areas not specifically designated above.

3.2.2 Backfill for Appurtenances

After the manhole, catchbasin, inlet, or similar structure has been constructed, backfill shall be placed in such a manner that the structure will not be damaged by the shock of falling earth. The backfill material shall be deposited and compacted as specified for final backfill, and shall be brought up evenly on all sides of the structure to prevent eccentric loading and excessive stress.

3.3 SPECIAL REQUIREMENTS

Special requirements for both excavation and backfill relating to the specific utilities are as follows:

3.3.1 Gas Distribution

Trenches shall be excavated to a depth that will provide not less than 24 inches of cover to the top of the pipe.

3.3.2 Water Lines

Trenches shall be of a depth to provide a minimum cover of 30 inches in unpaved areas and 36 inches in paved areas from the existing ground surface, or from the indicated finished grade, whichever is lower, to the top of the pipe.

3.3.3 Heat Distribution System

Initial backfill material shall be free of stones larger than 1/4 inch in any dimension.

3.3.4 Electrical Distribution System

Direct burial cable and conduit or duct line shall have a minimum cover of 24 inches from the finished grade, unless otherwise indicated.

3.3.5 Plastic Marking Tape

Warning tapes shall be installed directly above the pipe, at a depth of 18 inches below finished grade unless otherwise shown.

3.3.6 Tracer Wire

In addition to the plastic marking tape, tracer wire shall also be provided for the underground utilities. Tracer wire shall be provided for all pipe lines, including force mains and sprinkler system lines, but excluding storm drain and sanitary sewer lines. Tracer wire shall be provided for all electrical and communication conduits and direct buried cables. Tracer wire shall be installed on the bottom of the trench just to one side of

where the pipe, conduit, or cable contacts the trench bottom. The wire shall run continuously between and terminate at valve boxes on water and gas lines, regulator stub-ups on gas lines, sprinkler heads and valve boxes on sprinkler system lines, panel boxes on electrical lines, and other such aboveground appurtenances. Each end of the wire shall have an additional length of at least 2 feet coiled up in the appurtenance.

3.4 TESTING

Testing shall be the responsibility of the Contractor and shall be performed at no additional cost to the Government. Inspections and test results shall be certified by a registered professional civil engineer. These certifications shall state that the tests and observations were performed by or under the direct supervision of the engineer and that the results are representative of the materials or conditions being certified by the tests.

3.4.1 Testing Facilities

Tests shall be performed by an approved commercial testing laboratory. No work requiring testing will be permitted until the facilities have been approved by the Contracting Officer.

3.4.2 Testing of Backfill Materials

Classification of backfill materials shall be determined in accordance with ASTM D 2487 and the moisture-density relations of soils shall be determined in accordance with ASTM D 1557. Grain size of bedding and backfill materials shall be determined in accordance with ASTM C 136 or ASTM D 422 and ASTM D 1140 (wash No. 200, without hydrometer), as appropriate. A minimum of one soil classification and one moisture-density relation test shall be performed on each different type of material used for bedding and backfill.

3.4.3 Field Density Tests

Tests shall be performed in sufficient numbers to ensure that the specified density is being obtained. A minimum of one field density test per foot of placed backfill for every 150 feet, or fraction thereof, of installation shall be performed. Under grassed areas a minimum of one field density test per 2 feet of placed backfill for every 150 feet, or fraction thereof, of installation shall be performed. One moisture density relationship shall be determined for every 500 cubic yards of material used. Field in-place density shall be determined in accordance with ASTM D 1556. Copies of field and laboratory tests shall be furnished to the Contracting Officer. When test results indicate, as determined by the Contracting Officer, that compaction is not as specified, the material shall be removed, replaced and recompacted to meet specification requirements. Tests on recompacted areas shall be performed to determine conformance with specification requirements, at no additional cost to the Government.

3.4.3.1 Compaction Control

The tests required on materials prior to placement and the compaction control procedures and methods specified in Section 02315 EXCAVATION, FILLING AND BACKFILLING FOR BUILDINGS, Paragraph TESTING (with the exception of paragraph Tests Required During Placement) in regard to compaction control of soils, and utilizing the one-point or two-point compaction methods to relate field density data to laboratory test values,

shall fully apply to and be considered a part of this specification section.

3.4.4 Displacement of Sewers

After other required tests have been performed and the trench backfill compacted to the finished grade surface, the pipe shall be inspected to determine whether significant displacement has occurred. This inspection shall be conducted in the presence of the Contracting Officer. Pipe sizes larger than 36 inches shall be entered and examined, while smaller diameter pipe shall be inspected by shining a light or laser between manholes or manhole locations, or by the use of television cameras passed through the pipe. If, in the judgement of the Contracting Officer, the interior of the pipe shows poor alignment or any other defects that would cause improper functioning of the system, the defects shall be remedied as directed at no additional cost to the Government.

-- End of Section --

SECTION TABLE OF CONTENTS

DIVISION 02 - SITE WORK

SECTION 02390A

GROUNDING POINTS (TIE-DOWN ANCHOR) FOR AIRCRAFT

07/98

PART 1 GENERAL

1.1 REFERENCES
1.2 SUBMITTALS

PART 2 PRODUCTS

2.1 METALS
2.2 OMITTED
2.3 GROUNDING RODS
2.4 OMITTED
2.5 OMITTED
2.6 CONCRETE

PART 3 EXECUTION

3.1 OMITTED
3.2 OMITTED
3.3 OMITTED
3.4 GROUNDING POINTS
3.4.1 Pavement Recess
3.4.2 Installation
3.4.2.1 Existing Rigid Pavement
3.4.2.2 New Rigid Pavement
3.5 TESTS

-- End of Section Table of Contents --

UFGS-02390A (July 1998)

SECTION 02390A

GROUNDING POINTS (TIE-DOWN ANCHOR) FOR AIRCRAFT
07/98

PART 1 GENERAL

1.1 REFERENCES

The publications listed below form a part of this specification to the extent referenced. The publications are referred to in the text by the basic designation only.

AMERICAN SOCIETY FOR TESTING AND MATERIALS (ASTM)

ASTM B 371	(1996) Copper-Zinc-Silicon Alloy Rod

NATIONAL FIRE PROTECTION ASSOCIATION (NFPA)

NFPA 407	(1996) Aircraft Fuel Servicing

UNDERWRITERS LABORATORIES (UL)

UL 467	(1993; Rev thru Apr 1999) Grounding and Bonding Equipment

1.2 SUBMITTALS

Government approval is required for submittals with a "G" designation; submittals not having a "G" designation are for information only. When used, a designation following the "G" designation identifies the office that will review the submittal for the Government. The following shall be submitted in accordance with Section 01330 SUBMITTAL PROCEDURES:

SD-02 Shop Drawings

As-Built Drawings

Drawings that provide current factual information, including deviations from and amendments to the drawings and changes in the work, concealed and visible.

SD-07 Certificates

Grounding Rods

Certificate of compliance stating that the grounding rods meet the specified requirements.

Copper Conductors

Certificate of compliance stating that the copper conductors meet the specified requirements.

PART 2 PRODUCTS

2.1 METALS

Combination of materials that forms an electrolytic couple, which accelerates corrosion in the presence of moisture, shall not be used, unless moisture is permanently excluded from the junction of such metals.

2.2 OMITTED

2.3 GROUNDING RODS

Grounding rods shall conform to UL 467 and shall be made of copper-clad steel. The rods shall be not less than 3/4 inch in diameter and not less than 10 feet long. The copper cladding shall conform to the applicable requirements of ASTM B 371, Copper Alloy UNS No's. c 69400, c 69430, c 69440 or c 69450. The copper cladding shall be not less than 0.010 inches thick at any point and shall comply with adherence requirements and the banding requirements of UL 467. The Contractor shall submit certificates of compliance on the grounding rods. Rods shall be provided with a closed eye or shepherd's hook bend having an inside diameter of not less than 1-1/4 inches. The rods shall be pointed unless used for flexible pavement.

2.4 OMITTED
2.5 OMITTED

Grounding connectors shall comply with UL 467 for the required application. The Contractor shall submit certificates of compliance on the grounding connectors.

2.6 CONCRETE

Concrete shall be in accordance with Section 02753A CONCRETE PAVEMENT FOR AIRFIELDS AND OTHER HEAVY-DUTY PAVEMENTS.

PART 3 EXECUTION

3.1 OMITTED
3.2 OMITTED
3.3 OMITTED

3.4 GROUNDING POINTS

The grounding points shall be located as shown on the contract drawings to within plus or minus 2 inches.

3.4.1 Pavement Recess

The top of the grounding rod shall be set at or not more than 1/4 inch below the pavement surface grade. A recess 2-3/4 inches wide, and not more than 6 inches long, with a smooth rounded edge shall be provided in the pavement around the grounding point anchor eye to permit the entrance of lines into the eye and to allow for attachment of the grounding cable. The depth of the recess shall be no deeper than the bottom of the opening of the grounding point eye.

3.4.2 Installation

3.4.2.1 Existing Rigid Pavement

Grounding rods shall be installed in holes cored through the rigid pavement using rotary, non-percussion drilling techniques. The core holes shall have a minimum diameter of 10 inches. The grounding rod shall be installed by pushing or driving the rod through the pavement base courses and subgrade. The installation technique chosen by the Contractor shall not damage the grounding rod or the pavement. Installation shall be completed by placing concrete around the grounding rod in two lifts with each lift consolidated with spud vibrators.

3.4.2.2 New Rigid Pavement

The grounding rod shall be installed by pushing or driving the rod through the pavement base courses and subgrade prior to concrete placement. The installation technique chosen by the Contractor shall not damage the grounding rod. Hand finishing around the rod shall be kept to a minimum.

3.5 TESTS

Resistance to ground tests shall be measured as specified in NFPA 407. Test results shall be submitted to the Contracting Officer. Any ground rods that have more than 10,000 ohms of resistance shall be reported to the Contracting Officer immediately.

-- End of Section --

SECTION TABLE OF CONTENTS

DIVISION 02 - SITE WORK

SECTION 02510A

WATER DISTRIBUTION SYSTEM

05/02

PART 1 GENERAL

1.1 REFERENCES
1.2 PIPING
1.2.1 Omitted
1.2.2 Distribution Lines 80 mm (3 Inches) or Larger
1.2.3 Omitted
1.2.4 Omitted
1.2.5 Potable Water Lines
1.2.6 Plastic Piping System
1.2.7 Excavation, Trenching, and Backfilling
1.3 OMITTED
1.4 MANUFACTURER'S REPRESENTATIVE
1.5 SUBMITTALS
1.6 HANDLING

PART 2 PRODUCTS

2.1 PIPE
2.1.1 Reinforced and Prestressed Concrete Pipe
2.1.2 Plastic Pipe
2.1.2.1 PE Plastic Pipe
2.1.2.2 PVC Plastic Pipe
2.1.2.3 Oriented Polyvinyl Chloride (PVCO) Plastic Pipe
2.1.3 Reinforced Plastic Mortar Pressure (RPMP) Pipe
2.1.4 Reinforced Thermosetting Resin Pipe (RTRP)
2.1.4.1 RTRP-I
2.1.4.2 RTRP-II
2.1.5 Ductile-Iron Pipe
2.2 FITTINGS AND SPECIALS
2.2.1 Reinforced Concrete Pipe System
2.2.2 PVC Pipe System
2.2.3 RTRP and RPMP Pipe
2.2.4 Ductile-Iron Pipe System
2.3 JOINTS
2.3.1 Gaskets for Reinforced Concrete Pipe
2.3.2 Plastic Pipe Jointing
2.3.2.1 PE Pipe
2.3.2.2 PVC Pipe
2.3.2.3 PVCO Pipe
2.3.3 RPMP Pipe
2.3.4 RTRP Pipe
2.3.4.1 RTRP-I, Grade 1 and 2
2.3.4.2 RTRP-II, Grade 1 and 2
2.3.5 Ductile-Iron Pipe Jointing
2.3.6 Steel Pipe Jointing

2.3.6.1 Steel Pipe, Not Galvanized
2.3.6.2 Mechanical Couplings
2.3.7 Bonded Joints
2.3.8 Isolation Joints
2.4 OMITTED
2.5 OMITTED
2.6 OMITTED
2.7 OMTITED
2.8 OMITTED
2.9 MISCELLANEOUS ITEMS
2.9.1 Omitted
2.9.2 Omitted
2.9.3 Omitted
2.9.4 Omitted
2.9.5 Tapping Sleeves
2.9.6 Omitted
2.9.7 Disinfection

PART 3 EXECUTION

3.1 INSTALLATION
3.1.1 Cutting of Pipe
3.1.2 Adjacent Facilities
3.1.2.1 Sewer Lines
3.1.2.2 Water Lines
3.1.2.3 Copper Tubing Lines
3.1.2.4 Nonferrous Metallic Pipe
3.1.2.5 Omitted
3.1.2.6 Structures
3.1.3 Joint Deflection
3.1.3.1 Allowable for Reinforced Concrete Pipe
3.1.3.2 Offset for Flexible Plastic Pipe
3.1.3.3 Allowable for Ductile-Iron Pipe
3.1.3.4 Allowable for Steel Pipe
3.1.3.5 Allowable for RPMP Pipe
3.1.4 Placing and Laying
3.1.4.1 Reinforced Concrete Pipe Installation
3.1.4.2 Plastic Pipe Installation
3.1.4.3 Piping Connections
3.1.4.4 Penetrations
3.1.4.5 Flanged Pipe
3.1.5 Jointing
3.1.5.1 Reinforced Concrete Pipe Requirements
3.1.5.2 PE Pipe Requirements
3.1.5.3 PVC Plastic Pipe Requirements
3.1.5.4 RTRP I, RTRP II and RPMP Pipe
3.1.5.5 Ductile-Iron Pipe Requirements
3.1.5.6 Omitted
3.1.5.7 Omitted
3.1.5.8 Omitted
3.1.5.9 Bonded Joints Requirements
3.1.5.10 Isolation Joints and Dielectric Fittings
3.1.5.11 Transition Fittings
3.1.6 Omitted
3.1.7 Omitted
3.1.8 Omitted
3.1.9 Omitted
3.1.10 Thrust Restraint
3.1.10.1 Thrust Blocks

3.2 HYDROSTATIC TESTS
3.2.1 Pressure Test
3.2.2 Leakage Test
3.2.3 Time for Making Test
3.2.4 Concurrent Hydrostatic Tests
3.3 BACTERIAL DISINFECTION
3.3.1 Bacteriological Disinfection
3.4 CLEANUP

-- End of Section Table of Contents --

SECTION 02510A

WATER DISTRIBUTION SYSTEM
05/02

PART 1 GENERAL

1.1 REFERENCES

The publications listed below form a part of this specification to the extent referenced. The publications are referred to in the text by basic designation only.

AMERICAN SOCIETY FOR TESTING AND MATERIALS (ASTM)

ASTM D 1599	(1999) Resistance to Short-Time Hydraulic Failure Pressure of Plastic Pipe, Tubing, and Fittings
ASTM D 1784	(1999a) Rigid Poly(Vinyl Chloride) (PVC) Compounds and Chlorinated Poly(Vinyl Chloride) (CPVC) Compounds
ASTM D 1785	(1999) Poly(Vinyl Chloride) (PVC) Plastic Pipe, Schedules 40, 80, and 120
ASTM D 2241	(1996b) Poly(Vinyl Chloride) (PVC) Pressure-Rated Pipe (SDR Series)
ASTM D 2464	(1999) Threaded Poly(Vinyl Chloride) (PVC) Plastic Pipe Fittings, Schedule 80
ASTM D 2466	(1999) Poly(Vinyl Chloride) (PVC) Plastic Pipe Fittings, Schedule 40
ASTM D 2467	(1999) Poly(Vinyl Chloride) (PVC) Plastic Pipe Fittings, Schedule 80
ASTM D 2564	(1996a) Solvent Cements for Poly(Vinyl Chloride) (PVC) Plastic Piping Systems
ASTM D 2657	(1997) Heat Fusion Joining Polyolefin Pipe and Fittings
ASTM D 2774	(1994) Underground Installation of Thermoplastic Pressure Piping
ASTM D 2855	(1996) Making Solvent-Cemented Joints with Poly(Vinyl Chloride) (PVC) Pipe and Fittings
ASTM D 2996	(1995) Filament-Wound "Fiberglass" (Glass-Fiber-Reinforced Thermosetting-Resin) Pipe

ASTM D 2997	(1995) Centrifugally Cast "Fiberglass" (Glass-Fiber-Reinforced Thermosetting-Resin) Pipe
ASTM D 3139	(1998) Joints for Plastic Pressure Pipes Using Flexible Elastomeric Seals
ASTM D 3839	(1994a) Underground Installation of "Fiberglass" (Glass-Fiber-Reinforced Thermosetting Resin) Pipe
ASTM D 4161	(1996) "Fiberglass"(Glass-Fiber-Reinforced Thermosetting Resin) Pipe Joints Using Elastomeric Seals
ASTM F 477	(1999) Elastomeric Seals (Gaskets) for Joining Plastic Pipe
ASTM F 1483	(1998) Oriented Poly(Vinyl Chloride), PVCO, Pressure Pipe

ASME INTERNATIONAL (ASME)

ASME B1.20.1	(1983; R 1992) Pipe Threads, General Purpose (Inch)

AMERICAN WATER WORKS ASSOCIATION (AWWA)

AWWA B300	(1992) Hypochlorites
AWWA B301	(1992) Liquid Chlorine
AWWA C104	(1995) Cement-Mortar Lining for Ductile-Iron Pipe and Fittings for Water
AWWA C110	(1993) Ductile-Iron and Gray-Iron Fittings, 3 In. Through 48 In. (75 mm through 1200 mm), for Water and Other Liquids
AWWA C111	(1995) Rubber-Gasket Joints for Ductile-Iron Pressure Pipe and Fittings
AWWA C151	(1996) Ductile-Iron Pipe, Centrifugally Cast, for Water or Other Liquids
AWWA C153	(1994; Errata Nov 1996) Ductile-Iron Compact Fittings, 3 In. Through 24 In. (76 mm through 610 mm) and 54 In. through 64 In. (1,400 mm through 1,600 mm) for Water Service
AWWA C200	(1997) Steel Water Pipe - 6 In. (150 mm) and Larger
AWWA C207	(1994) Steel Pipe Flanges for Waterworks Service - Sizes 4 In. Through 144 In. (100 mm through 3,600 mm)

AWWA C300	(1997) Reinforced Concrete Pressure Pipe, Steel-Cylinder Type, for Water and Other Liquids
AWWA C301	(1992) Prestressed Concrete Pressure Pipe, Steel-Cylinder Type, for Water and Other Liquids
AWWA C303	(1995) Concrete Pressure Pipe, Bar-Wrapped, Steel Cylinder Type
AWWA C600	(1993) Installation of Ductile-Iron Water Mains and Their Appurtenances
AWWA C606	(1997) Grooved and Shouldered Joints
AWWA C651	(1992) Disinfecting Water Mains
AWWA C900	(1997; C900a) Polyvinyl Chloride (PVC) Pressure Pipe, 4 In. Through 12 In., for Water Distribution
AWWA C901	(1996) Polyethylene (PE) Pressure Pipe and Tubing, 1/2 In. Through 3 In., for Water Service
AWWA C905	(1997) Polyvinyl Chloride (PVC) Water Transmission Pipe, Nominal Diameters 14 In. Through 36 In.
AWWA C909	(1998) Molecularly Oriented Polyvinyl Chloride (PVCO) Pressure Pipe, 4 IN through 12 IN (100 mm through 300 mm), for Water Distribution
AWWA C950	(1995) Fiberglass Pressure Pipe
AWWA M23	(1980) Manual: PVC Pipe - Design and Installation

ASBESTOS CEMENT PIPE PRODUCERS ASSOCIATION (ACPPA)

ACPPA Work Practices	(1988) Recommended Work Practices for A/C Pipe

NSF INTERNATIONAL (NSF)

NSF 14	(1998) Plastics Piping Components and Related Materials
NSF 61	(1999) Drinking Water System Components - Health Effects (Sections 1-9)

1.2 PIPING

This section covers water distribution lines, and connections to building service at a point approximately 5 feet outside buildings and structures to which service is required. The Contractor shall have a copy of the

manufacturer's recommendations for each material or procedure to be utilized available at the construction site at all times.

1.2.1 Omitted

1.2.2 Distribution Lines 80 mm (3 Inches) or Larger

Piping for water distribution lines 3 inches or larger shall be ductile iron, polyvinyl chloride (PVC) through 36 inch nominal diameter plastic, Oriented PVC plastic filament-wound or centrifugally cast reinforced thermosetting resin, reinforced plastic mortar pressure pipe, or reinforced concrete, unless otherwise shown or specified.

1.2.3 Omitted
1.2.4 Omitted

1.2.5 Potable Water Lines

Piping and components of potable water systems which come in contact with the potable water shall conform to NSF 61.

1.2.6 Plastic Piping System

Plastic piping system components (PVC, polyethylene, thermosetting resin and reinforced plastic mortar pressure) intended for transportation of potable water shall comply with NSF 14 and be legibly marked with their symbol.

1.2.7 Excavation, Trenching, and Backfilling

Excavation, trenching, and backfilling shall be in accordance with the applicable provisions of Section 02316 EXCAVATION, TRENCHING, AND BACKFILLING FOR UTILITIES SYSTEMS, except as modified herein.

1.3 OMITTED

1.4 MANUFACTURER'S REPRESENTATIVE

The Contractor shall have a manufacturer's field representative present at the jobsite during the installation and testing of PE, RTRP, and/or RPMP pipe to provide technical assistance and to verify that the materials are being installed in accordance with the manufacturer's prescribed procedures. When the representative feels that the Contractor is installing and testing the PE, RTRP, and/or RPMP pipe in a satisfactory manner, certification shall be written to note which individuals employed by the Contractor are capable of properly installing the pipe. The field representative shall advise the Contractor of unsatisfactory conditions immediately when they occur. Such conditions include improper diameter of pipe ends, damaged interior liner, poorly prepared joints, improper curing of joints, moving pipe before joints are cured, bending pipe to follow abrupt changes in trench contours, leaving pipe ends open in trench overnight, not properly drying joints after rain storms, exceeding effective adhesive life, sharp objects in trench bed, backfill that could damage pipe, improper procedure for concrete encasement of pipe, omission of thrust blocks at changes in direction or any other condition which could have an adverse effect on the satisfactory completion and operation of the piping system.

1.5 SUBMITTALS

Government approval is required for submittals with a "G" designation; submittals not having a "G" designation are for information only. When used, a designation following the "G" designation identifies the office that will review the submittal for the Government. The following shall be submitted in accordance with Section 01330 SUBMITTAL PROCEDURES:

SD-03 Product Data

Installation.

The manufacturer's recommendations for each material or procedure to be utilized.

Waste Water Disposal Method.

The method proposed for disposal of waste water from hydrostatic tests and disinfection, prior to performing hydrostatic tests.

Satisfactory Installation.

A statement signed by the principal officer of the contracting firm stating that the installation is satisfactory and in accordance with the contract drawings and specifications, and the manufacturer's prescribed procedures and techniques, upon completion of the project and before final acceptance.

SD-06 Test Reports

Bacteriological Disinfection.

Test results from commercial laboratory verifying disinfection.

SD-07 Certificates

Manufacturer's Representative.

The name and qualifications of the manufacturer's representative and written certification from the manufacturer that the representative is technically qualified in all phases of PE, RTRP, and/or RPMP pipe laying and jointing and experienced to supervise the work and train the Contractor's field installers, prior to commencing installation.

1.6 HANDLING

Pipe and accessories shall be handled to ensure delivery to the trench in sound, undamaged condition, including no injury to the pipe coating or lining. If the coating or lining of any pipe or fitting is damaged, the repair shall be made by the Contractor in a satisfactory manner, at no additional cost to the Government. No other pipe or material shall be placed inside a pipe or fitting after the coating has been applied. Pipe shall be carried into position and not dragged. Use of pinch bars and tongs for aligning or turning pipe will be permitted only on the bare ends of the pipe. The interior of pipe and accessories shall be thoroughly cleaned of foreign matter before being lowered into the trench and shall be kept clean during laying operations by plugging or other approved method. Before installation, the pipe shall be inspected for defects. Material found to be defective before or after laying shall be replaced with sound

material without additional expense to the Government. Rubber gaskets that are not to be installed immediately shall be stored in a cool and dark place.

PART 2 PRODUCTS

2.1 PIPE

Pipe shall conform to the respective specifications and other requirements specified below.

2.1.1 Reinforced and Prestressed Concrete Pipe

Steel cylinder reinforced concrete pipe shall conform to AWWA C300, AWWA C301, or AWWA C303 and shall be designed to withstand a working pressure of not less than 150 psi unless otherwise shown or specified.

2.1.2 Plastic Pipe

2.1.2.1 PE Plastic Pipe

Pipe, tubing, and heat-fusion fittings shall conform to AWWA C901.

2.1.2.2 PVC Plastic Pipe

Pipe, couplings and fittings shall be manufactured of material conforming to ASTM D 1784, Class 12454B.

a. Pipe Less Than 4 inch Diameter:

(1) Screw-Joint: Pipe shall conform to dimensional requirements of ASTM D 1785 Schedule 80, with joints meeting requirements of 150 psi working pressure, 200 psi hydrostatic test pressure, unless otherwise shown or specified. Pipe couplings when used, shall be tested as required by ASTM D 2464.

(2) Elastomeric-Gasket Joint: Pipe shall conform to dimensional requirements of ASTM D 1785 Schedule 40, with joints meeting the requirements of 150 psi working pressure, 200 psi hydrostatic test pressure, unless otherwise shown or specified, or it may be pipe conforming to requirements of ASTM D 2241, elastomeric joint, with the following applications:

SDR	Maximum Working Pressure psi	Minimum Hydrostatic Pressure psi
26	100	133
21	120	160
17	150	200
13.5	200	266

(3) Solvent Cement Joint: Pipe shall conform to dimensional requirements of ASTM D 1785 or ASTM D 2241 with joints meeting the requirements of 150 psi working pressure and 200 psi hydrostatic test pressure.

b. Pipe 4 through 12 inch Diameter: Pipe, couplings and fittings

shall conform to AWWA C900, Class 150, CIOD pipe dimensions, elastomeric-gasket joint, unless otherwise shown or specified.

c. Pipe 14 through 36 inch Diameter: Pipe shall conform to AWWA C905 unless otherwise shown or specified.

2.1.2.3 Oriented Polyvinyl Chloride (PVCO) Plastic Pipe

Pipe, couplings, and fittings shall be manufactured of material conforming to ASTM D 1784, Class 12454-B. Pipe shall conform to AWWA C909, Class 150, and to ASTM F 1483 and shall have an outside diameter equal to cast iron outside diameter.

2.1.3 Reinforced Plastic Mortar Pressure (RPMP) Pipe

RPMP shall be produced by centrifugal casting and shall have an OD 12 to 48 inches equal to ductile-iron, with a 150 psi pressure rating and with a minimum pipe stiffness of 36 psi. RPMP shall be in accordance with AWWA C950.

2.1.4 Reinforced Thermosetting Resin Pipe (RTRP)

Pipe shall have a quick-burst strength greater than or equal to four times the normal working pressure of the pipe. The quick-burst strength test shall conform to the requirements of ASTM D 1599.

2.1.4.1 RTRP-I

RTRP-I shall conform to ASTM D 2996, except pipe shall have an outside diameter equal to cast iron outside diameter or standard weight steel pipe. The pipe shall be suitable for a normal working pressure of 150 psi at 73 degrees F. The inner surface of the pipe shall have a smooth uniform continuous resin-rich surface liner conforming to ASTM D 2996.

2.1.4.2 RTRP-II

RTRP-II shall conform to ASTM D 2997. Pipe shall have an outside diameter equal to standard weight steel pipe.

2.1.5 Ductile-Iron Pipe

Ductile-iron pipe shall conform to AWWA C151, working pressure not less than 150 psi, unless otherwise shown or specified. Pipe shall be cement-mortar lined in accordance with AWWA C104. Linings shall be standard.

2.2 FITTINGS AND SPECIALS

2.2.1 Reinforced Concrete Pipe System

Fittings and specials required for closures, curves, bends, branches and connections to valves, pipe, or structures shall be approved by the Contracting Officer and conform to the details furnished by the manufacturer and to AWWA C300, AWWA C301, or AWWA C303, as applicable.

2.2.2 PVC Pipe System

a. For pipe less than 4 inch diameter, fittings for threaded pipe shall conform to requirements of ASTM D 2464, threaded to conform

to the requirements of ASME B1.20.1 for use with Schedule 80 pipe and fittings; fittings for solvent cement jointing shall conform to ASTM D 2466 or ASTM D 2467; and fittings for elastomeric-gasket joint pipe shall be iron conforming to AWWA C110 or AWWA C111. Iron fittings and specials shall be cement-mortar lined (standard thickness) in accordance with AWWA C104.

b. For pipe 4 inch diameter and larger, fittings and specials shall be iron, bell end in accordance with AWWA C110, 150 psi pressure rating unless otherwise shown or specified, except that profile of bell may have special dimensions as required by the pipe manufacturer; or fittings and specials may be of the same material as the pipe with elastomeric gaskets, all in conformance with AWWA C900. Iron fittings and specials shall be cement-mortar lined (standard thickness) in accordance with AWWA C104. Fittings shall be bell and spigot or plain end pipe, or as applicable. Ductile iron compact fittings shall be in accordance with AWWA C153.

2.2.3 RTRP and RPMP Pipe

Fittings and specials shall be compatible with the pipe supplied. Filament wound or molded fittings up to 6 inches shall conform to AWWA C950. Iron fittings shall be cement-mortar lined in accordance with AWWA C104 and shall conform to AWWA C110 and AWWA C111. Fittings shall be suitable for working and testing pressures specified for the pipe.

2.2.4 Ductile-Iron Pipe System

Fittings and specials shall be suitable for 150 psi pressure rating, unless otherwise specified. Fittings and specials for mechanical joint pipe shall conform to AWWA C110. Fittings and specials for use with push-on joint pipe shall conform to AWWA C110 and AWWA C111. Fittings and specials for grooved and shouldered end pipe shall conform to AWWA C606. Fittings and specials shall be cement-mortar lined (standard thickness) in accordance with AWWA C104. Ductile iron compact fittings shall conform to AWWA C153.

2.3 JOINTS

2.3.1 Gaskets for Reinforced Concrete Pipe

Rubber-gasket joints shall be of the type using a bell-and-spigot joint design of steel. The gaskets shall conform to AWWA C300, AWWA C301, or AWWA C303, as applicable.

2.3.2 Plastic Pipe Jointing

2.3.2.1 PE Pipe

Joints for pipe fittings and couplings shall be strong tight joints as specified for PE in Paragraph INSTALLATION. Joints connecting pipe of differing materials shall be made in accordance with the manufacturer's recommendation, and as approved by the Contracting Officer.

2.3.2.2 PVC Pipe

Joints, fittings, and couplings shall be as specified for PVC pipe. Joints connecting pipe of differing materials shall be made in accordance with the manufacturer's recommendations, and as approved by the Contracting Officer.

2.3.2.3 PVCO Pipe

Joints shall conform to ASTM D 3139. Elastomeric gaskets shall conform to ASTM F 477.

2.3.3 RPMP Pipe

Joints shall be bell and spigot gasket coupling utilizing an elastomeric gasket in accordance with ASTM D 4161.

2.3.4 RTRP Pipe

2.3.4.1 RTRP-I, Grade 1 and 2

Joints shall be bell and spigot with elastomeric gasket, mechanical coupling with elastomeric gasket, threaded and bonded coupling, or tapered bell and spigot with compatible adhesive. All RTRP-I materials shall be products of a single manufacturer.

2.3.4.2 RTRP-II, Grade 1 and 2

Joints shall be the bell and spigot type with elastomeric gasket, bell and spigot with adhesive, butt-jointed with adhesive bonded reinforced overlay, mechanical, flanged, threaded or commercially available proprietary joints, provided they are capable of conveying water at the pressure and temperature of the pipe.

2.3.5 Ductile-Iron Pipe Jointing

a. Mechanical joints shall be of the stuffing box type and shall conform to AWWA C111.

b. Push-on joints shall conform to AWWA C111.

c. Rubber gaskets and lubricants shall conform to the applicable requirements of AWWA C111.

2.3.6 Steel Pipe Jointing

2.3.6.1 Steel Pipe, Not Galvanized

a. Mechanical couplings shall be as specified.

b. Bell-and-spigot joints for use with rubber gaskets shall conform to AWWA C200, as appropriate for the type of pipe. Rubber gaskets shall conform to applicable requirements of AWWA C200.

c. Flanges shall conform to AWWA C207, and shall be used only in above ground installation or where shown on the drawings, or when approved.

2.3.6.2 Mechanical Couplings

Mechanical couplings for steel pipe shall be the sleeve type, or when approved, the split-sleeve type and shall provide a tight flexible joint under all reasonable conditions, such as pipe movements caused by expansion, contraction, slight setting or shifting in the ground, minor variations in trench gradients, and traffic vibrations. Couplings shall be of strength not less than the adjoining pipeline.

2.3.7 Bonded Joints

For all ferrous pipe, a metallic bond shall be provided at each joint, including joints made with flexible couplings, caulking, or rubber gaskets, of ferrous metallic piping to effect continuous conductivity. The bond wire shall be Size 1/0 copper conductor suitable for direct burial shaped to stand clear of the joint. The bond shall be of the thermal weld type.

2.3.8 Isolation Joints

Isolation joints shall be installed between nonthreaded ferrous and nonferrous metallic pipe, fittings and valves. Isolation joints shall consist of a sandwich-type flange isolation gasket of the dielectric type, isolation washers, and isolation sleeves for flange bolts. Isolation gaskets shall be full faced with outside diameter equal to the flange outside diameter. Bolt isolation sleeves shall be full length. Units shall be of a shape to prevent metal-to-metal contact of dissimilar metallic piping elements.

a. Sleeve-type couplings shall be used for joining plain end pipe sections. The two couplings shall consist of one steel middle ring, two steel followers, two gaskets, and the necessary steel bolts and nuts to compress the gaskets.

b. Split-sleeve type couplings may be used in aboveground installations when approved in special situations and shall consist of gaskets and a housing in two or more sections with the necessary bolts and nuts.

2.4 OMITTED
2.5 OMITTED
2.6 OMITTED
2.7 OMTITED
2.8 OMITTED

2.9 MISCELLANEOUS ITEMS

2.9.1 Omitted
2.9.2 Omitted
2.9.3 Omitted
2.9.4 Omitted

2.9.5 Tapping Sleeves

Tapping sleeves of the sizes indicated for connection to existing main shall be the cast gray, ductile, or malleable iron, split-sleeve type with flanged or grooved outlet, and with bolts, follower rings and gaskets on each end of the sleeve. Construction shall be suitable for a maximum working pressure of 150 psi. Bolts shall have square heads and hexagonal nuts. Longitudinal gaskets and mechanical joints with gaskets shall be as recommended by the manufacturer of the sleeve. When using grooved mechanical tee, it shall consist of an upper housing with full locating collar for rigid positioning which engages a machine-cut hole in pipe, encasing an elastomeric gasket which conforms to the pipe outside diameter around the hole and a lower housing with positioning lugs, secured together during assembly by nuts and bolts as specified, pretorqued to 50 foot-pounds.

2.9.6 Omitted

2.9.7 Disinfection

Chlorinating materials shall conform to the following:

Chlorine, Liquid: AWWA B301.

Hypochlorite, Calcium and Sodium: AWWA B300.

PART 3 EXECUTION

3.1 INSTALLATION

3.1.1 Cutting of Pipe

Cutting of pipe shall be done in a neat and workmanlike manner without damage to the pipe. Unless otherwise recommended by the manufacturer and authorized by the Contracting Officer, cutting shall be done with an approved type mechanical cutter. Wheel cutter shall be used when practicable. Copper tubing shall be cut square and all burrs shall be removed. Squeeze type mechanical cutters shall not be used for ductile iron.

3.1.2 Adjacent Facilities

3.1.2.1 Sewer Lines

Where the location of the water pipe is not clearly defined in dimensions on the drawings, the water pipe shall not be laid closer horizontally than 10 feet from a sewer except where the bottom of the water pipe will be at least 12 inches above the top of the sewer pipe, in which case the water pipe shall not be laid closer horizontally than 6 feet from the sewer. Where water lines cross under gravity-flow sewer lines, the sewer pipe, for a distance of at least 10 feet each side of the crossing, shall be fully encased in concrete or shall be made of pressure pipe with no joint located within 3 feet horizontally of the crossing. Water lines shall in all cases cross above sewage force mains or inverted siphons and shall be not less than 2 feet above the sewer main. Joints in the sewer main, closer horizontally than 3 feet to the crossing, shall be encased in concrete.

3.1.2.2 Water Lines

Water lines shall not be laid in the same trench with sewer lines, gas lines, fuel lines, or electric wiring.

3.1.2.3 Copper Tubing Lines

Copper tubing shall not be installed in the same trench with ferrous piping materials.

3.1.2.4 Nonferrous Metallic Pipe

Where nonferrous metallic pipe, e.g. copper tubing, crosses any ferrous piping material, a minimum vertical separation of 12 inchesshall be maintained between pipes.

3.1.2.5 Omitted

3.1.2.6 Structures

Where water pipe is required to be installed within 3 feet of existing structures, the water pipe shall be sleeved as required in Paragraph "Casing Pipe". The Contractor shall install the water pipe and sleeve ensuring that there will be no damage to the structures and no settlement or movement of foundations or footings.

3.1.3 Joint Deflection

3.1.3.1 Allowable for Reinforced Concrete Pipe

Maximum allowable deflections from a straight line or grade, as required by vertical curves, horizontal curves, or offsets, shall be 5 degrees for reinforced concrete pipe unless a lesser amount is recommended by the manufacturer. Long radius curves in reinforced concrete pipe shall be formed by straight pipe in which spigot rings are placed on a bevel. Slight deflections may be made by straight pipe, provided that the maximum joint opening caused by such deflection does not exceed the maximum recommended by the pipe manufacturer. Short radius curves and closures shall be formed by shorter lengths of pipe, bevels, or fabricated specials specified.

3.1.3.2 Offset for Flexible Plastic Pipe

Maximum offset in alignment between adjacent pipe joints shall be as recommended by the manufacturer and approved by the Contracting Officer, but shall not exceed 5 degrees.

3.1.3.3 Allowable for Ductile-Iron Pipe

The maximum allowable deflection shall be as given in AWWA C600. If the alignment requires deflection in excess of the above limitations, special bends or a sufficient number of shorter lengths of pipe shall be furnished to provide angular deflections within the limit set forth.

3.1.3.4 Allowable for Steel Pipe

For pipe with bell-and-spigot rubber-gasket joints, maximum allowable deflections from a straight line or grade, as required by vertical curves, horizontal curves, or offsets shall be 5 degrees unless a lesser amount is recommended by the manufacturer. Short-radius curves and closures shall be formed by short lengths of pipe or fabricated specials specified.

3.1.3.5 Allowable for RPMP Pipe

For pipe with bell and spigot rubber gasket joints, maximum allowable deflections from a straight line or grade shall be 4 degrees determined by the diameter, unless a lesser amount is recommended by the manufacturer. Short-radius curves and closures shall be formed by short lengths of pipe or fabricated specials specified.

3.1.4 Placing and Laying

Pipe and accessories shall be carefully lowered into the trench by means of derrick, ropes, belt slings, or other authorized equipment. Water-line materials shall not be dropped or dumped into the trench. Abrasion of the pipe coating shall be avoided. Except where necessary in making connections with other lines or as authorized by the Contracting Officer,

pipe shall be laid with the bells facing in the direction of laying. The full length of each section of pipe shall rest solidly upon the pipe bed, with recesses excavated to accommodate bells, couplings, and joints. Pipe that has the grade or joint disturbed after laying shall be taken up and relaid. Pipe shall not be laid in water or when trench conditions are unsuitable for the work. Water shall be kept out of the trench until joints are complete. When work is not in progress, open ends of pipe, fittings, and valves shall be securely closed so that no trench water, earth, or other substance will enter the pipes or fittings. Where any part of the coating or lining is damaged, the repair shall be made by and at the Contractor's expense in a satisfactory manner. Pipe ends left for future connections shall be valved, plugged, or capped, and anchored, as shown.

3.1.4.1 Reinforced Concrete Pipe Installation

Reinforced concrete pipe shall be installed in accordance with recommendations of the pipe manufacturer. Before laying reinforced concrete pipe, the outside surface of the spigot and the inside surface of the bell shall be cleaned and an acceptable vegetable-compound lubricant applied to the inside surface of the bell and to the rubber gasket. Where prescribed by the pipe manufacturer, the gasket shall be placed in the groove on the end of the pipe before the pipe is placed in the trench. After the pipe has been forced together, the position of the rubber gasket shall be checked with a feeler gauge in accordance with the pipe manufacturer's recommendations. Tapping of reinforced concrete cylinder pipe shall be done in accordance with the manufacturer's approved recommendations. Where the manufacturer recommends that the taps be made by attaching the rubber-gasketed saddle to the outside of the pipe using U-bolts, the saddle shall be grouted in if necessary, the mortar coating shall be chipped away, even with the hole in the saddle plate. The exposed circumferential wires shall be removed and the cylinder and concrete core drilled out, and the steel saddle and U-bolts shall be protected by concrete encasement.

3.1.4.2 Plastic Pipe Installation

RTRP shall be installed in accordance with ASTM D 3839. RPMP shall be installed in accordance with the manufacturer's recommendations. PE Pipe shall be installed in accordance with ASTM D 2774. PVC pipe shall be installed in accordance with AWWA M23.

3.1.4.3 Piping Connections

Where connections are made between new work and existing mains, the connections shall be made by using specials and fittings to suit the actual conditions. When made under pressure, these connections shall be installed using standard methods as approved by the Contracting Officer. Connections to existing asbestos-cement pipe shall be made in accordance with ACPPA Work Practices.

3.1.4.4 Penetrations

Pipe passing through walls of valve pits and structures shall be provided with ductile-iron or Schedule 40 steel wall sleeves. Annular space between walls and sleeves shall be filled with rich cement mortar. Annular space between pipe and sleeves shall be filled with mastic.

3.1.4.5 Flanged Pipe

Flanged pipe shall only be installed above ground or with the flanges in valve pits.

3.1.5 Jointing

3.1.5.1 Reinforced Concrete Pipe Requirements

The inside and outside annular spaces between abutting sections of concrete pipe shall be filled with rich cement mortar in accordance with the pipe manufacturer's recommendations. Excess mortar shall be removed from interior annular spaces, leaving a smooth and continuous surface between pipe sections. Exposed portions of steel joint rings shall be protected from corrosion by a metallic coating or by an approved nonmetallic coating. Rubber gaskets shall be handled, lubricated where necessary, and installed in accordance with the pipe manufacturer's recommendations.

3.1.5.2 PE Pipe Requirements

Jointing shall comply with ASTM D 2657, Technique I-Socket Fusion or Technique II-Butt Fusion.

3.1.5.3 PVC Plastic Pipe Requirements

a. Pipe less than 4 inch diameter: Threaded joints shall be made by wrapping the male threads with approved thread tape or applying an approved lubricant, then threading the joining members together. The joint shall be tightened using strap wrenches to prevent damage to the pipe and/or fitting. To avoid excessive torque, joints shall be tightened no more than one thread past hand-tight. Preformed rubber-ring gaskets for elastomeric-gasket joints shall be made in accordance with ASTM F 477 and as specified. Pipe ends for push-on joints shall be beveled to facilitate assembly and marked to indicate when the pipe is fully seated. The gasket shall be prelubricated to prevent displacement. The gasket and ring groove in the bell or coupling shall match. The manufacturer of the pipe or fitting shall supply the elastomeric gasket. Couplings shall be provided with stops or centering rings to assure that the coupling is centered on the joint. Solvent cement joints shall use sockets conforming to ASTM D 2467. The solvent cement used shall meet the requirements of ASTM D 2564; the joint assembly shall be made in accordance with ASTM D 2855 and the manufacturer's specific recommendations.

b. Pipe 4 through 12 inch diameter: Joints shall be elastomeric gasket as specified in AWWA C900. Jointing procedure shall be as specified for pipe less than 4 inch diameter with configuration using elastomeric ring gasket.

c. Pipe 14 through 36 inch diameter: Joints shall be elastomeric gasket push-on joints made in accordance with AWWA M23.

3.1.5.4 RTRP I, RTRP II and RPMP Pipe

a. RTRP I: Assembly of the pipe shall be done in conformance with the manufacturer's written instruction and installation procedures. Field joints shall be prepared as specified by the pipe manufacturer. Several pipe joints having interference-fit type couplings may be field bonded and cured simultaneously. However, the pipe shall not be moved and additional joints shall

not be made until the previously laid joints are completely cured. Joints not having interference-fit type coupling shall be fitted with a clamp which shall hold the joint rigidly in place until the joint cement has completely cured. The clamps shall have a protective material on the inner surface to prevent damage to the plastic pipe when the clamp is tightened in place. The pipe manufacturer shall provide a device or method to determine when the joint is pulled against the pipe stop. Additionally, the pipe manufacturer shall furnish a gauge to measure the diameter of the spigot ends to ensure the diameter conforms to the tolerances specified by the manufacturer. All pipe ends shall be gauged. Factory certified tests shall have been satisfactorily performed to verify that short-term rupture strength is 1,500 psior greater when carried out in accordance with ASTM D 1599. At any ambient temperature, field bonded epoxy-cemented joints shall be cured with a self-regulating, thermostatically temperature controlled, electrical heating blanket for the time and temperature recommended by the manufacturer for the applicable size and type of joint, or by an alternate heating method recommended by the manufacturer and approved by the Contracting Officer. The joint sections shall not be moved during heating, or until the joint has cooled to ambient temperature.

b. RTRP II: A reinforced overlay joint shall be used to join sections together through a placement of layers of reinforcement fiberglass roving, mat, tape or fabric thoroughly saturated with compatible catalyzed resin.

c. RPMP: Bell and spigot gasket-sealing coupling shall be used to connect pipes. The spigot shall be lubricated prior to push-together assembly.

d. Fittings and Specials for RTRP and RPMP Pipe: Metal to RTRP and RPMP pipe connections shall be made by bolting steel flanges to RTRP and RPMP pipe flanges. Cast-iron fitting with gasket bell or mechanical joint may be used with RTRP if pipe has cast iron outside diameter. Steel flanges shall be flat-faced type. Where raised-face steel flanges are used, spacer rings shall be used to provide a flat-face seat for RTRP and RPMP pipe flanges. A full-face Buna "N" gasket 1/8 inch thick with a shore hardness of 50-60 shall be used between all flanged connections. The RTRP and RPMP pipe flange shall have raised sealing rings. Flat washers shall be used under all nuts and bolts on RTRP and RPMP pipe flanges. Bolts and nuts shall be of noncorrosive steel and torqued to not more than 100 foot pounds.Flanges shall not be buried. A concrete pit shall be provided for all flanged connections.

3.1.5.5 Ductile-Iron Pipe Requirements

Mechanical and push-on type joints shall be installed in accordance with AWWA C600 for buried lines or AWWA C606 for grooved and shouldered pipe above ground or in pits.

3.1.5.6 Omitted
3.1.5.7 Omitted
3.1.5.8 Omitted

3.1.5.9 Bonded Joints Requirements

Bonded joints shall be installed in accordance with details specified for joints in paragraph JOINTS.

3.1.5.10 Isolation Joints and Dielectric Fittings

Isolation joints and dielectric fittings shall be installed in accordance with details specified in paragraph JOINTS. Dielectric unions shall be encapsulated in a field-poured coal-tar covering, with at least 1/8 inch thickness of coal tar over all fitting surfaces.

3.1.5.11 Transition Fittings

Connections between different types of pipe and accessories shall be made with transition fittings approved by the Contracting Officer.

3.1.6 Omitted
3.1.7 Omitted
3.1.8 Omitted
3.1.9 Omitted

3.1.10 Thrust Restraint

Plugs, caps, tees and bends deflecting 11.25 degrees or more, either vertically or horizontally, on waterlines 4 inches in diameter or larger, and fire hydrants shall be provided with thrust restraints. Valves shall be securely anchored or shall be provided with thrust restraints to prevent movement. Thrust restraints shall be either thrust blocks or, for ductile-iron pipes, restrained joints.

3.1.10.1 Thrust Blocks

Thrust blocking shall be concrete of a mix not leaner than: 1 cement, 2-1/2 sand, 5 gravel; and having a compressive strength of not less than 2,000 psi after 28 days. Blocking shall be placed between solid ground and the hydrant or fitting to be anchored. Unless otherwise indicated or directed, the base and thrust bearing sides of thrust blocks shall be poured directly against undisturbed earth. The sides of thrust blocks not subject to thrust may be poured against forms. The area of bearing shall be as shown or as directed. Blocking shall be placed so that the fitting joints will be accessible for repair. Steel rods and clamps, protected by galvanizing or by coating with bituminous paint, shall be used to anchor vertical down bends into gravity thrust blocks.

3.2 HYDROSTATIC TESTS

Where any section of a water line is provided with concrete thrust blocking for fittings or hydrants, the hydrostatic tests shall not be made until at least 5 days after installation of the concrete thrust blocking, unless otherwise approved.

3.2.1 Pressure Test

After the pipe is laid, the joints completed, fire hydrants permanently installed, and the trench partially backfilled leaving the joints exposed for examination, the newly laid piping or any valved section of piping shall, unless otherwise specified, be subjected for 1 hour to a hydrostatic pressure test of 200 psi. Water supply lines designated on the drawings shall be subjected for 1 hour to a hydrostatic pressure test of 200 psi.

Each valve shall be opened and closed several times during the test. Exposed pipe, joints, fittings, hydrants, and valves shall be carefully examined during the partially open trench test. Joints showing visible leakage shall be replaced or remade as necessary. Cracked or defective pipe, joints, fittings, hydrants and valves discovered in consequence of this pressure test shall be removed and replaced with sound material, and the test shall be repeated until the test results are satisfactory. The requirement for the joints to remain exposed for the hydrostatic tests may be waived by the Contracting Officer when one or more of the following conditions is encountered:

a. Wet or unstable soil conditions in the trench.

b. Compliance would require maintaining barricades and walkways around and across an open trench in a heavily used area that would require continuous surveillance to assure safe conditions.

c. Maintaining the trench in an open condition would delay completion of the project.

The Contractor may request a waiver, setting forth in writing the reasons for the request and stating the alternative procedure proposed to comply with the required hydrostatic tests. Backfill placed prior to the tests shall be placed in accordance with the requirements of Section 02316 EXCAVATION, TRENCHING, AND BACKFILLING FOR UTILITIES SYSTEMS.

3.2.2 Leakage Test

Leakage test shall be conducted after the pressure tests have been satisfactorily completed. The duration of each leakage test shall be at least 2 hours, and during the test the water line shall be subjected to not less than 200 psi pressure. Water supply lines designated on the drawings shall be subjected to a pressure equal to 200 psi. Leakage is defined as the quantity of water to be supplied into the newly laid pipe, or any valved or approved section, necessary to maintain pressure within 5 psi of the specified leakage test pressure after the pipe has been filled with water and the air expelled. Piping installation will not be accepted if leakage exceeds the allowable leakage which is determined by the following formula:

L = 0.0001351ND(P raised to 0.5 power)

L = Allowable leakage in gallons per hour
N = Number of joints in the length of pipeline tested
D = Nominal diameter of the pipe in inches
P = Average test pressure during the leakage test, in psi gauge

Should any test of pipe disclose leakage greater than that calculated by the above formula, the defective joints shall be located and repaired until the leakage is within the specified allowance, without additional cost to the Government.

3.2.3 Time for Making Test

Except for joint material setting or where concrete thrust blocks necessitate a 5-day delay, pipelines jointed with rubber gaskets, mechanical or push-on joints, or couplings may be subjected to hydrostatic pressure, inspected, and tested for leakage at any time after partial completion of backfill. Cement-mortar lined pipe may be filled with water

as recommended by the manufacturer before being subjected to the pressure test and subsequent leakage test.

3.2.4 Concurrent Hydrostatic Tests

The Contractor may elect to conduct the hydrostatic tests using either or both of the following procedures. Regardless of the sequence of tests employed, the results of pressure tests, leakage tests, and disinfection shall be as specified. Replacement, repair or retesting required shall be accomplished by the Contractor at no additional cost to the Government.

a. Pressure test and leakage test may be conducted concurrently.

b. Hydrostatic tests and disinfection may be conducted concurrently, using the water treated for disinfection to accomplish the hydrostatic tests. If water is lost when treated for disinfection and air is admitted to the unit being tested, or if any repair procedure results in contamination of the unit, disinfection shall be reaccomplished.

3.3 BACTERIAL DISINFECTION

3.3.1 Bacteriological Disinfection

Before acceptance of potable water operation, each unit of completed waterline shall be disinfected as prescribed by AWWA C651. From several points in the unit, the Contracting Officer will take samples of water in proper sterilized containers for bacterial examination or personnel from the Contractor's commercial laboratory shall take at least three water samples from different points, approved by the Contracting Officer, in proper sterilized containers and perform a bacterial examination in accordance with state approved methods. The commercial laboratory shall be certified by the state's approving authority for examination of potable water. The disinfection shall be repeated until tests indicate the absence of pollution for at least 2 full days. The unit will not be accepted until satisfactory bacteriological results have been obtained.

3.4 CLEANUP

Upon completion of the installation of water lines, and appurtenances, all debris and surplus materials resulting from the work shall be removed.

-- End of Section --

SECTION TABLE OF CONTENTS

DIVISION 02 - SITE WORK

SECTION 02620A

SUBDRAINAGE SYSTEM

09/01

PART 1 GENERAL

1.1 REFERENCES
1.2 SUBMITTALS
1.3 DELIVER, STORAGE, AND HANDLING
1.3.1 Delivery and Storage
1.3.2 Handling

PART 2 PRODUCTS

2.1 PIPE FOR SUBDRAINS
2.1.1 Concrete Pipe
2.1.2 Omitted
2.1.3 Perforated Concrete Pipe
2.1.4 Perforated Corrugated Steel Pipe
2.1.5 Omitted
2.1.6 Omitted
2.1.7 Omitted
2.1.8 Perforated Corrugated Aluminum Alloy Pipe
2.1.9 Perforated Corrugated Aluminum Alloy Pipe, Fully Bituminous Coated
2.1.10 Precoated Corrugated Steel Pipe
2.1.11 Plastic Pipe
2.1.11.1 Acrylonitrile-Butadiene-Styrene (ABS) Piping
2.1.11.2 Polyvinyl Chloride (PVC) Pipe and Fittings
2.1.11.3 Corrugated Polyethylene (PE) Pipe and Fittings
2.1.11.4 Pipe Perforations
2.2 FILTER FABRIC
2.3 DRAINAGE STRUCTURES
2.3.1 Concrete
2.3.2 Mortar
2.3.3 Manholes and Appurtenances
2.4 SUBDRAIN FILTER AND BEDDING MATERIAL

PART 3 EXECUTION

3.1 EXCAVATION AND BEDDING FOR SUBDRAIN SYSTEMS
3.2 MANHOLES AND FLUSHING AND OBSERVATION RISERS
3.2.1 Manholes
3.2.2 Flushing and Observation Risers
3.3 INSTALLATION OF FILTER FABRIC AND PIPE FOR SUBDRAINS
3.3.1 Installation of Filter Fabric
3.3.1.1 Omitted
3.3.1.2 Omitted
3.3.1.3 Trench Lining and Overlaps
3.3.2 Installation of Pipe for Subdrains
3.3.2.1 Pipelaying
3.3.2.2 Jointings

3.4 INSTALLATION OF AND BACKFILLING FOR BLIND OR FRENCH DRAINS
3.5 INSTALLATION OF FILTER MATERIAL AND BACKFILLING FOR SUBDRAINS
3.6 TESTS
3.6.1 Pipe Test
3.6.2 JP-4 Fuel Resistance Test

-- End of Section Table of Contents --

UFGS-02620A (September 2001)

SECTION 02620A

SUBDRAINAGE SYSTEM
09/01

PART 1 GENERAL

1.1 REFERENCES

The publications listed below form a part of this specification to the extent referenced. The publications are referred to in the text by basic designation only.

AMERICAN ASSOCIATION OF STATE HIGHWAY AND TRANSPORTATION OFFICIALS (AASHTO)

AASHTO M 190M	(1995) Bituminous Coated Corrugated Metal Culvert Pipe and Pipe Arches
AASHTO M 252M	(1996) Corrugated Polyethylene Drainage Tubing
AASHTO M 294	(1998) Corrugated Polyethylene Pipe, 300- to 1200-mm Diameter

AMERICAN SOCIETY FOR TESTING AND MATERIALS (ASTM)

ASTM A 760/A 760M	(2000) Corrugated Steel Pipe, Metallic-Coated for Sewers and Drains
ASTM A 762/A 762M	(2000) Corrugated Steel Pipe, Polymer Precoated for Sewers and Drains
ASTM B 745/B 745M	(1997) Corrugated Aluminum Pipe for Sewers and Drains
ASTM C 14	(1999) Concrete Sewer, Storm Drain, and Culvert Pipe
ASTM C 150	(1999a) Portland Cement
ASTM C 231	(1997el) Air Content of Freshly Mixed Concrete by the Pressure Method
ASTM C 444	(1995) Perforated Concrete Pipe
ASTM D 1751	(1999) Preformed Expansion Joint Filler for Concrete Paving and Structural Construction (Nonextruding and Resilient Bituminous Types)
ASTM D 1752	(1984; R 1996el) Preformed Sponge Rubber and Cork Expansion Joint Fillers for

	Concrete Paving and Structural Construction
ASTM D 2751	(1996a) Acrylonitrile-Butadiene-Styrene (ABS) Sewer Pipe and Fittings
ASTM D 3034	(1998) Type PSM Poly(Vinyl Chloride) (PVC) Sewer Pipe and Fittings
ASTM D 3212	(1996a) Joints for Drain and Sewer Plastic Pipes Using Flexible Elastomeric Seals
ASTM D 5034	(1995) Breaking Strength and Elongation of Textile Fabrics (Grab Test)
ASTM F 405	(1997) Corrugated Polyethylene (PE) Tubing and Fittings
ASTM F 667	(1997) Large Diameter Corrugated Polyethylene Tubing and Fittings
ASTM F 758	(1995) Smooth-Wall Poly(Vinyl Chloride) (PVC) Plastic Underdrain Systems for Highway, Airport, and Similar Drainage
ASTM F 949	(2000) Poly(Vinyl Chloride) (PVC) Corrugated Sewer Pipe With a Smooth Interior and Fittings

1.2 SUBMITTALS

Government approval is required for submittals with a "G" designation; submittals not having a "G" designation are for information only. When used, a designation following the "G" designation identifies the office that will review the submittal for the Government. The following shall be submitted in accordance with Section 01330 SUBMITTAL PROCEDURES:

SD-04 Samples

Filter Fabric
Pipe for Subdrains

Samples of filter fabric, pipe, and pipe fittings, before starting the work.

SD-07 Certificates

Filter Fabric
Pipe for Subdrains

Certifications from the manufacturers attesting that materials meet specification requirements. Certificates are required for drain pipe, drain tile, fittings, and filter fabric.

1.3 DELIVER, STORAGE, AND HANDLING

1.3.1 Delivery and Storage

Materials delivered to site shall be inspected for damage, unloaded, and stored with minimum handling. Materials shall not be stored directly on

the ground. The inside of pipes and fittings shall be kept free of dirt and debris. During shipment and storage, filter fabric shall be wrapped in burlap or similar heavy duty protective covering. The storage area shall protect the fabric from mud, soil, dust, and debris. Filter fabric materials that are not to be installed immediately shall not be stored in direct sunlight. Plastic pipe shall be installed within 6 months from the date of manufacture unless otherwise approved.

1.3.2 Handling

Materials shall be handled in such a manner as to insure delivery to the trench in sound undamaged condition. Pipe shall be carried and not dragged to the trench.

PART 2 PRODUCTS

2.1 PIPE FOR SUBDRAINS

Pipe for subdrains shall be of the types and sizes indicated.

2.1.1 Concrete Pipe

Concrete pipe shall be Class 3 and shall conform to ASTM C 14 using ASTM C 150 portland cement Type II or V.

2.1.2 Omitted

2.1.3 Perforated Concrete Pipe

Perforated concrete pipe shall conform to ASTM C 444, Type I perforations and to ASTM C 14, Class 3.

2.1.4 Perforated Corrugated Steel Pipe

Perforated corrugated steel pipe shall conform to ASTM A 760/A 760M, Type III. Sheet thickness of pipe shall be 16 gage.

2.1.5 Omitted
2.1.6 Omitted
2.1.7 Omitted

2.1.8 Perforated Corrugated Aluminum Alloy Pipe

Perforated corrugated aluminum alloy pipe shall conform to ASTM B 745/B 745M, Type III, Class 1. Sheet thickness of pipe shall be 16 gage.

2.1.9 Perforated Corrugated Aluminum Alloy Pipe, Fully Bituminous Coated

Perforated corrugated aluminum alloy pipe, fully bituminous coated shall conform to ASTM B 745/B 745M, Type III, Class 2 with a bituminous coating conforming to AASHTO M 190M, Type A.

2.1.10 Precoated Corrugated Steel Pipe

Precoated corrugated steel pipe shall conform to ASTM A 762/A 762M, Type III.

2.1.11 Plastic Pipe

Plastic pipe shall contain ultraviolet inhibitor to provide protection from exposure to direct sunlight.

2.1.11.1 Acrylonitrile-Butadiene-Styrene (ABS) Piping

Acrylonitrile-butadiene-styrene (ABS) piping and fittings shall conform to ASTM D 2751, with maximum SDR of 35.

2.1.11.2 Polyvinyl Chloride (PVC) Pipe and Fittings

Polyvinyl chloride (PVC) pipe and fittings shall conform to ASTM D 3034, ASTM F 949, or ASTM F 758, Type PS 46.

2.1.11.3 Corrugated Polyethylene (PE) Pipe and Fittings

Use ASTM F 405 for pipes 3 to 6 inches in diameter, inclusive, ASTM F 667 for pipes 8 to 24 inches in diameter, AASHTO M 252M for pipes 3 to 10 inches, AASHTO M 294 for pipes 12 to 24 inches in diameter. Fittings shall be manufacturer's standard type and shall conform to the indicated specification.

2.1.11.4 Pipe Perforations

Water inlet area shall be a minimum of 0.5 square inch per linear foot. Manufacturer's standard perforated pipe which essentially meets these requirements may be substituted with prior approval of the Contracting Officer.

a. Circular Perforations in Plastic Pipe: Circular holes shall be cleanly cut not more than 3/8 inch or less than 3/16 inch in diameter and arranged in rows parallel to the longitudinal axis of the pipe. Perforations shall be approximately 3 inches center-to-center along rows. The rows shall be approximately 1-1/2 inches apart and arranged in a staggered pattern so that all perforations lie at the midpoint between perforations in adjacent rows. The rows shall be spaced over not more than 155 degrees of circumference. The spigot or tongue end of the pipe shall not be perforated for a length equal to the depth of the socket, and perforations shall continue at uniform spacing over the entire length of the pipe.

b. Slotted Perforations in Plastic Pipe: Circumferential slots shall be cleanly cut so as not to restrict the inflow of water and uniformly spaced along the length and circumference of the tubing. Width of slots shall not exceed 1/8 inch nor be less than 1/32 inch. The length of individual slots shall not exceed 1-1/4 inches on 3-inch diameter tubing, 10 percent of the tubing inside nominal circumference on 4- to 8-inch diameter tubing, and 2-1/2 inches on 10-inch diameter tubing. Rows of slots shall be symmetrically spaced so that they are fully contained in two quadrants of the pipe. Slots shall be centered in the valleys of the corrugations of profile wall pipe.

2.2 FILTER FABRIC

Filter fabric shall be a pervious sheet of polyester, nylon, or polypropylene filaments non-woven formed into a uniform pattern with distinct and measurable openings. The filter fabric shall provide an equivalent opening size (AOS) no finer than the US Standard Sieve No. 100

and no coarser than the US Standard Sieve No. 70. AOS is defined as the number of the US Standard sieve having openings closest in size to the filter fabric openings. The filaments shall consist of a long-chain synthetic polymer composed of at least 85 percent by weight of propylene, ethylene, or vinylidene-chloride, and shall contain stabilizers and/or inhibitors added to the base plastic to make the filaments resistant to deterioration due to ultraviolet and heat exposure. The fabric shall have a minimum physical strength of 150 pounds per inch in any direction when tested in accordance with ASTM D 5034 using the grab test method with 1 square inch jaws and a constant rate of travel of 12 inches per minute. Elongation at failure shall be between 30 and 70 percent. The fabric shall be constructed so that the filaments will retain their relative position with respect to each other. The edges of the fabric shall be selvaged or otherwise finished to prevent the outer material from pulling away from the fabric.

2.3 DRAINAGE STRUCTURES

2.3.1 Concrete

Except for precast concrete, reinforcement shall conform to the requirements for 3500 psi concrete. The concrete mixtures shall have air content, by volume of concrete, based on measurements made immediately after discharge from the mixer of 5 to 7 percent when coarse-aggregate maximum size is 1-1/2 inches or smaller. Air content shall be determined in accordance with ASTM C 231. The concrete covering over steel reinforcing shall be not less than 1 inch thick for covers and not less than 1-1/2 inches thick for walls and flooring. Concrete covering deposited directly against the ground shall be at least 3 inches thick between the steel and the ground. Expansion-joint filler material shall conform to ASTM D 1751 or ASTM D 1752.

2.3.2 Mortar

Mortar for pipe joints and connections to other drainage structures shall be composed of one part by volume of portland cement and two parts of sand. The quantity of water in the mixture shall be sufficient to produce a stiff workable mortar. Water shall be clean and free of injurious acids, alkalies, and organic impurities. The mortar shall be used within 30 minutes from the time the ingredients are mixed with water.

2.3.3 Manholes and Appurtenances

Manholes and appurtenances shall be as stated in Section 02630 STORM-DRAINAGE SYSTEM.

2.4 SUBDRAIN FILTER AND BEDDING MATERIAL

Subdrain filter and bedding material shall be the same as specified in Section 02714 DRAINAGE LAYER.

PART 3 EXECUTION

3.1 EXCAVATION AND BEDDING FOR SUBDRAIN SYSTEMS

Trenching and excavation, including the removal of rock and unstable material, shall be in accordance with Section 02316 EXCAVATION, TRENCHING, AND BACKFILLING FOR UTILITIES SYSTEMS. Bedding material shall be placed in the trench as indicated or as required as replacement materials used in

those areas where unstable materials were removed. Compaction of the bedding material shall be as specified for cohesionless material in Section 02316 EXCAVATION, TRENCHING, AND BACKFILLING FOR UTILITIES SYSTEMS.

3.2 MANHOLES AND FLUSHING AND OBSERVATION RISERS

3.2.1 Manholes

Manholes shall be installed complete with frames and covers or gratings at the locations and within the limits and sizes indicated. Manholes shall be constructed of one of the materials specified for manholes in paragraph DRAINAGE STRUCTURES. Joints shall be completely filled and shall be smooth and free of surplus mortar or mastic on the inside of the structure. Brick manholes shall be plastered with 1/2 inch of mortar over the entire outside surface of the walls. Brick for square or rectangular structures shall be laid in stretcher courses with a header course every sixth course. Brick for round structures shall be laid radially with every sixth course laid as a stretcher course. Ladders or step inserts shall be installed in manholes exceeding 6 feet in depth. Base for manholes shall be either precast or cast-in-place concrete.

3.2.2 Flushing and Observation Risers

Flushing and observation riser pipes with frames and covers shall be installed at the locations indicated. Risers shall be constructed of precast concrete pipe. Joining of riser pipes to the subdrain system shall be as recommended by the manufacturer.

3.3 INSTALLATION OF FILTER FABRIC AND PIPE FOR SUBDRAINS

3.3.1 Installation of Filter Fabric

3.3.1.1 Omitted
3.3.1.2 Omitted

3.3.1.3 Trench Lining and Overlaps

Trenches shall be lined with filter fabric and shall be graded to obtain smooth side and bottom surfaces so that the fabric will not bridge cavities in the soil or be damaged by projecting rock. The fabric shall be laid flat but not stretched on the soil, and it shall be secured with anchor pins. Overlaps shall be at least 12 inches, and anchor pins shall be used along the overlaps.

3.3.2 Installation of Pipe for Subdrains

3.3.2.1 Pipelaying

Each pipe shall be carefully inspected before it is laid. Any defective or damaged pipe shall be rejected. No pipe shall be laid when the trench conditions or weather is unsuitable for such work. Water shall be removed from trenches by sump pumping or other approved methods. The pipe shall be laid to the grades and alignment as indicated. The pipe shall be bedded to the established gradeline. Perforations shall be centered on the bottom of the pipe. Pipes of either the bell-and-spigot type or the tongue-and-groove type shall be laid with the bell or groove ends upstream. All pipes in place shall be approved before backfilling.

3.3.2.2 Jointings

a. Nonperforated Concrete and Clay Pipe: Pipe shall be laid with 1/8 to 1/4 inch opening between the ends of the pipe or as required by spacing lugs constructed in the pipe. Mortar shall be placed in the joint at three points and pressed firmly into place to hold the pipe securely in line. The mortar shall be the full depth of the bell or groove and approximately 1 inch in width, and shall be located at the third points around the joint with the top point at the center of the pipe. The inside of the pipe shall be free of excess mortar.

b. Perforated Concrete Pipe: The pipe shall be laid with closed joints with positive provision for centering each section of the pipe in the bell or groove of the previously placed section.

c. Perforated Corrugated Metal Pipe or Bituminous Coated, Perforated Corrugated Metal Pipe: The sections of perforated corrugated metal pipe or bituminous coated, perforated corrugated metal pipe shall be securely fastened together with standard connecting bands furnished by the manufacturer of the pipe.

d. Omitted.
e. Omitted.
f. Omitted.

g. Bituminous Coated or Uncoated Semicircular Steel Pipe: Coupling bands shall consist of an uncorrugated top and bottom section fabricated to fit around two adjacent pieces of pipe. Coupling bands shall be bolted together with four bolts.

h. Bituminous Coated or Uncoated Corrugated Aluminum Pipe: If aluminum pipe is to be connected to dissimilar metal, the connection shall be insulated by bituminous coating or other nonconductive material. Standard joints between corrugated aluminum pipe shall be securely fastened with standard connecting bands furnished by the manufacturer of the pipe.

i. Acrylonitrile-Butadiene-Styrene (ABS): Solvent cement or elastomeric joints for ABS pipe shall be in accordance with ASTM D 2751. Dimensions and tolerances shall be in accordance with TABLE II of ASTM D 2751.

j. Polyvinyl Chloride (PVC) Pipe: Joints shall be in accordance with the requirements of ASTM D 3034, ASTM D 3212, or ASTM F 949.

k. Perforated Corrugated Polyethylene Pipe: Perforated corrugated polyethylene drainage pipe shall be installed in accordance with the manufacturer's specifications and as specified herein. A pipe with physical imperfections shall not be installed. No more than 5 percent stretch in a section will be permitted.

3.4 INSTALLATION OF AND BACKFILLING FOR BLIND OR FRENCH DRAINS

Filter material shall be placed as indicated and compacted as specified for cohesionless materials in Section 02316 EXCAVATION, TRENCHING, AND BACKFILLING FOR UTILITIES SYSTEMS. Filter material shall extend to a suitable outlet or to an outlet through a pipeline as indicated. Overlying backfill material shall be placed and compacted as specified in Section 02316 EXCAVATION, TRENCHING, AND BACKFILLING FOR UTILITIES SYSTEMS.

3.5 INSTALLATION OF FILTER MATERIAL AND BACKFILLING FOR SUBDRAINS

After pipe for subdrains has been laid, inspected, and approved, filter material shall be placed around and over the pipe to the depth indicated. The filter material shall be placed in layers not to exceed 8 inches thick, and each layer shall be thoroughly compacted by mechanical tampers or rammers to obtain the required density. Compaction of filter material and the placement and compaction of overlying backfill material shall be in accordance with the applicable provisions specified in Section 02316 EXCAVATION, TRENCHING, AND BACKFILLING FOR UTILITIES SYSTEMS.

3.6 TESTS

3.6.1 Pipe Test

Strength tests of pipe shall conform to field service test requirements of the Federal Specification, ASTM specification, or AASHTO specification covering the product (paragraph PIPE FOR SUBDRAINS).

3.6.2 JP-4 Fuel Resistance Test

Five unaged fabric samples, 4 (plus or minus 0.2) by 6 (plus or minus 0.2) inches shall be immersed in JP-4 fuel at room temperature for a period of 7 days. Each sample then shall be tested for tensile strength and elongation in accordance with ASTM D 5034. The strength of the fabric in any direction shall be no less than 85 percent of the strength specified in paragraph FILTER FABRIC.

-- End of Section --

SECTION TABLE OF CONTENTS

DIVISION 02 - SITE WORK

SECTION 02630A

STORM-DRAINAGE SYSTEM

03/00

PART 1 GENERAL

1.1 REFERENCES
1.2 OMITTED
1.3 SUBMITTALS
1.4 DELIVERY, STORAGE, AND HANDLING
1.4.1 Delivery and Storage
1.4.2 Handling

PART 2 PRODUCTS

2.1 PIPE FOR CULVERTS AND STORM DRAINS
2.1.1 Concrete Pipe
2.2 DRAINAGE STRUCTURES
2.2.1 Flared End Sections
2.2.2 Precast Reinforced Concrete Box
2.3 MISCELLANEOUS MATERIALS
2.3.1 Concrete
2.3.2 Mortar
2.3.3 Precast Concrete Segmental Blocks
2.3.4 Brick
2.3.5 Precast Reinforced Concrete Manholes
2.3.6 Prefabricated Corrugated Metal Manholes
2.3.7 Frame and Cover for Gratings
2.3.8 Joints
2.3.8.1 Flexible Watertight Joints
2.3.8.2 External Sealing Bands
2.3.8.3 Flexible Watertight, Gasketed Joints
2.4 STEEL LADDER
2.5 OMITTED
2.6 RESILIENT CONNECTORS

PART 3 EXECUTION

3.1 EXCAVATION FOR PIPE CULVERTS, STORM DRAINS, AND DRAINAGE STRUCTURES
3.1.1 Trenching
3.1.2 Removal of Rock
3.1.3 Removal of Unstable Material
3.2 BEDDING
3.2.1 Concrete Pipe Requirements
3.3 PLACING PIPE
3.3.1 Concrete Pipe
3.3.2 Omitted
3.3.3 Omitted
3.3.4 Omitted
3.3.5 Omitted
3.3.6 Omitted
3.3.7 Omitted

3.3.8 Jacking Pipe Through Fills
3.4 JOINTING
3.4.1 Concrete and Clay Pipe
3.4.1.1 Omitted
3.4.1.2 Omitted
3.4.1.3 Omitted
3.4.1.4 Omitted
3.4.1.5 Omitted
3.4.1.6 Omitted
3.4.1.7 Flexible Watertight Joints
3.5 DRAINAGE STRUCTURES
3.5.1 Manholes and Inlets
3.5.2 Walls and Headwalls
3.6 STEEL LADDER INSTALLATION
3.7 BACKFILLING
3.7.1 Backfilling Pipe in Trenches
3.7.2 Backfilling Pipe in Fill Sections
3.7.3 Movement of Construction Machinery
3.7.4 Compaction
3.7.4.1 General Requirements
3.7.4.2 Minimum Density
3.7.5 Determination of Density

-- End of Section Table of Contents --

UFGS-02630A (March 2000)

SECTION 02630A

STORM-DRAINAGE SYSTEM
03/00

PART 1 GENERAL

1.1 REFERENCES

The publications listed below form a part of this specification to the extent referenced. The publications are referred to in the text by basic designation only.

AMERICAN ASSOCIATION OF STATE HIGHWAY AND TRANSPORTATION OFFICIALS (AASHTO)

AASHTO M 198	(1998) Joints for Circular Concrete Sewer and Culvert Pipe Using Flexible Watertight Gaskets

AMERICAN RAILWAY ENGINEERING & MAINTENANCE-OF-WAY ASSOCIATION (AREMA)

AREMA Manual	(1999) Manual for Railway Engineering (4 Vol.)

AMERICAN SOCIETY FOR TESTING AND MATERIALS (ASTM)

ASTM A 48	(1994a) Gray Iron Castings
ASTM A 123/A 123M	(1997ael) Zinc (Hot-Dip Galvanized) Coatings on Iron and Steel Products
ASTM A 536	(1999el) Ductile Iron Castings
ASTM A 929/A 929M	(1997) Steel Sheet, Metallic-Coated by the Hot-Dip Process for Corrugated Steel Pipe
ASTM B 26/B 26M	(1998) Aluminum-Alloy Sand Castings
ASTM C 32	(1999el) Sewer and Manhole Brick (Made from Clay or Shale)
ASTM C 55	(1999) Concrete Brick
ASTM C 62	(1997a) Building Brick (Solid Masonry Units Made from Clay or Shale)
ASTM C 76	(1999) Reinforced Concrete Culvert, Storm Drain, and Sewer Pipe
ASTM C 139	(1999) Concrete Masonry Units for Construction of Catch Basins and Manholes

ASTM C 231	(1997el) Air Content of Freshly Mixed Concrete by the Pressure Method
ASTM C 270	(1997) Mortar for Unit Masonry
ASTM C 425	(1998b) Compression Joints for Vitrified Clay Pipe and Fittings
ASTM C 443	(1998) Joints for Circular Concrete Sewer and Culvert Pipe, Using Rubber Gaskets
ASTM C 478	(1997) Precast Reinforced Concrete Manhole Sections
ASTM C 789	(1998) Precast Reinforced Concrete Box Sections for Culverts, Storm Drains, and Sewers
ASTM C 850	(1998) Precast Reinforced Concrete Box Sections for Culverts, Storm Drains, and Sewers with Less Than 2 Ft. of Cover Subjected to Highway Loadings
ASTM C 877	(1994) External Sealing Bands for Noncircular Concrete Sewer, Storm Drain, and Culvert Pipe
ASTM C 923	(1998) Resilient Connectors Between Reinforced Concrete Manhole Structures, Pipes and Materials
ASTM D 1056	(1998) Flexible Cellular Materials - Sponge or Expanded Rubber
ASTM D 1171	(1994) Rubber Deterioration - Surface Ozone Cracking Outdoors or Chamber (Triangular Specimens)
ASTM D 1557	(1998) Laboratory Compaction Characteristics of Soil Using Modified Effort (56,000 ft-lbf/cu. ft. (2,700 kN-m/cu.m.))
ASTM D 1751	(1999) Preformed Expansion Joint Filler for Concrete Paving and Structural Construction (Nonextruding and Resilient Bituminous Types)
ASTM D 1752	(1984; R 1996el) Preformed Sponge Rubber and Cork Expansion Joint Fillers for Concrete Paving and Structural Construction
ASTM D 2167	(1994) Density and Unit Weight of Soil in Place by the Rubber Balloon Method
ASTM D 2922	(1996el) Density of Soil and Soil-Aggregate in Place by Nuclear Methods (Shallow Depth)

ASTM D 3017 (1988; R 1996el) Water Content of Soil and Rock in Place by Nuclear Methods (Shallow Depth)

1.2 OMITTED

1.3 SUBMITTALS

Government approval is required for submittals with a "G" designation; submittals not having a "G" designation are for information only. When used, a designation following the "G" designation identifies the office that will review the submittal for the Government. The following shall be submitted in accordance with Section 01330 SUBMITTAL PROCEDURES:

SD-03 Product Data

Placing Pipe

Printed copies of the manufacturer's recommendations for installation procedures of the material being placed, prior to installation.

SD-04 Samples

Pipe for Culverts and Storm Drains

Samples of materials, before work is started.

SD-07 Certificates

Pipeline Testing
Determination of Density
Frame and Cover for Gratings

Certified copies of test reports demonstrating conformance to applicable pipe specifications, before pipe is installed. Certification on the ability of frame and cover or gratings to carry the imposed live load.

1.4 DELIVERY, STORAGE, AND HANDLING

1.4.1 Delivery and Storage

Materials delivered to site shall be inspected for damage, unloaded, and stored with a minimum of handling. Materials shall not be stored directly on the ground. The inside of pipes and fittings shall be kept free of dirt and debris. Before, during, and after installation, plastic pipe and fittings shall be protected from any environment that would result in damage or deterioration to the material. The Contractor shall have a copy of the manufacturer's instructions available at the construction site at all times and shall follow these instructions unless directed otherwise by the Contracting Officer. Solvents, solvent compounds, lubricants, elastomeric gaskets, and any similar materials required to install plastic pipe shall be stored in accordance with the manufacturer's recommendations and shall be discarded if the storage period exceeds the recommended shelf life. Solvents in use shall be discarded when the recommended pot life is exceeded.

1.4.2 Handling

Materials shall be handled in a manner that ensures delivery to the trench in sound, undamaged condition. Pipe shall be carried to the trench, not dragged.

PART 2 PRODUCTS

2.1 PIPE FOR CULVERTS AND STORM DRAINS

Pipe for culverts and storm drains shall be of the sizes indicated and shall conform to the requirements specified.

2.1.1 Concrete Pipe

ASTM C 76, Class III, IV and V as shown on the contract drawings.

2.2 DRAINAGE STRUCTURES

2.2.1 Flared End Sections

Sections shall be of a standard design fabricated from zinc coated steel sheets meeting requirements of ASTM A 929/A 929M.

2.2.2 Precast Reinforced Concrete Box

For highway loadings with 2 feet of cover or more or subjected to dead load only, ASTM C 789; for less than 2 feet of cover subjected to highway loading, ASTM C 850.

2.3 MISCELLANEOUS MATERIALS

2.3.1 Concrete

Unless otherwise specified, concrete and reinforced concrete shall conform to the requirements for 3500 psi concrete. The concrete mixture shall have air content by volume of concrete, based on measurements made immediately after discharge from the mixer, of 5 to 7 percent when maximum size of coarse aggregate exceeds 1-1/2 inches. Air content shall be determined in accordance with ASTM C 231. The concrete covering over steel reinforcing shall not be less than 1 inch thick for covers and not less than 1-1/2 inches thick for walls and flooring. Concrete covering deposited directly against the ground shall have a thickness of at least 3 inches between steel and ground. Expansion-joint filler material shall conform to ASTM D 1751, or ASTM D 1752, or shall be resin-impregnated fiberboard conforming to the physical requirements of ASTM D 1752.

2.3.2 Mortar

Mortar for pipe joints, connections to other drainage structures, and brick or block construction shall conform to ASTM C 270, Type M, except that the maximum placement time shall be 1 hour. The quantity of water in the mixture shall be sufficient to produce a stiff workable mortar. Water shall be clean and free of harmful acids, alkalies, and organic impurities. The mortar shall be used within 30 minutes after the ingredients are mixed with water. The inside of the joint shall be wiped clean and finished smooth. The mortar head on the outside shall be protected from air and sun with a proper covering until satisfactorily cured.

2.3.3 Precast Concrete Segmental Blocks

Precast concrete segmental block shall conform to ASTM C 139, not more than 8 inches thick, not less than 8 inches long, and of such shape that joints can be sealed effectively and bonded with cement mortar.

2.3.4 Brick

Brick shall conform to ASTM C 62, Grade SW; ASTM C 55, Grade S-I or S-II; or ASTM C 32, Grade MS. Mortar for jointing and plastering shall consist of one part portland cement and two parts fine sand. Lime may be added to the mortar in a quantity not more than 25 percent of the volume of cement. The joints shall be filled completely and shall be smooth and free from surplus mortar on the inside of the structure. Brick structures shall be plastered with 1/2 inch of mortar over the entire outside surface of the walls. For square or rectangular structures, brick shall be laid in stretcher courses with a header course every sixth course. For round structures, brick shall be laid radially with every sixth course a stretcher course.

2.3.5 Precast Reinforced Concrete Manholes

Precast reinforced concrete manholes shall conform to ASTM C 478. Joints between precast concrete risers and tops shall be made with flexible watertight, rubber-type gaskets meeting the requirements of paragraph JOINTS.

2.3.6 Prefabricated Corrugated Metal Manholes

Manholes shall be of the type and design recommended by the manufacturer. Manholes shall be complete with frames and cover, or frames and gratings.

2.3.7 Frame and Cover for Gratings

Frame and cover for gratings shall be cast gray iron, ASTM A 48, Class 35B; cast ductile iron, ASTM A 536, Grade 65-45-12; or cast aluminum, ASTM B 26/B 26M, Alloy 356.OT6. Weight, shape, size, and waterway openings for grates and curb inlets shall be as indicated on the plans.

2.3.8 Joints

2.3.8.1 Flexible Watertight Joints

Flexible watertight joints shall be made with plastic or rubber-type gaskets for concrete pipe and with factory-fabricated resilient materials for clay pipe. The design of joints and the physical requirements for plastic gaskets shall conform to AASHTO M 198, and rubber-type gaskets shall conform to ASTM C 443. Factory-fabricated resilient joint materials shall conform to ASTM C 425. Gaskets shall have not more than one factory-fabricated splice, except that two factory-fabricated splices of the rubber-type gasket are permitted if the nominal diameter of the pipe being gasketed exceeds 54 inches.

2.3.8.2 External Sealing Bands

Requirements for external sealing bands shall conform to ASTM C 877.

2.3.8.3 Flexible Watertight, Gasketed Joints

When infiltration or exfiltration is a concern for pipe lines, the couplings may be required to have gaskets. The closed-cell expanded rubber gaskets shall be a continuous band approximately 7 inches wide and approximately 3/8 inch thick, meeting the requirements of ASTM D 1056, Type 2 B3, and shall have a quality retention rating of not less than 70 percent when tested for weather resistance by ozone chamber exposure, Method B of ASTM D 1171. Rubber O-ring gaskets shall be 13/16 inch in diameter for pipe diameters of 36 inches or smaller and 7/8 inch in diameter for larger pipe having 1/2 inch deep end corrugation. Rubber O-ring gaskets shall be 1-3/8 inches in diameter for pipe having 1 inch deep end corrugations. O-rings shall meet the requirements of AASHTO M 198 or ASTM C 443. Flexible plastic gaskets shall conform to requirements of AASHTO M 198, Type B.

2.4 STEEL LADDER

Steel ladder shall be provided where the depth of the manhole exceeds 12 feet. These ladders shall be not less than 16 inches in width, with 3/4 inch diameter rungs spaced 12 inches apart. The two stringers shall be a minimum 3/8 inch thick and 2-1/2 inches wide. Ladders and inserts shall be galvanized after fabrication in conformance with ASTM A 123/A 123M.

2.5 OMITTED

2.6 RESILIENT CONNECTORS

Flexible, watertight connectors used for connecting pipe to manholes and inlets shall conform to ASTM C 923.

PART 3 EXECUTION

3.1 EXCAVATION FOR PIPE CULVERTS, STORM DRAINS, AND DRAINAGE STRUCTURES

Excavation of trenches, and for appurtenances and backfilling for culverts and storm drains, shall be in accordance with the applicable portions of Section 02316 EXCAVATION, TRENCHING, AND BACKFILLING FOR UTILITIES SYSTEMS and the requirements specified below.

3.1.1 Trenching

The width of trenches at any point below the top of the pipe shall be not greater than the outside diameter of the pipe plus 12 inches to permit satisfactory jointing and thorough tamping of the bedding material under and around the pipe. Sheeting and bracing, where required, shall be placed within the trench width as specified. Contractor shall not overexcavate. Where trench widths are exceeded, redesign with a resultant increase in cost of stronger pipe or special installation procedures will be necessary. Cost of this redesign and increased cost of pipe or installation shall be borne by the Contractor without additional cost to the Government.

3.1.2 Removal of Rock

Rock in either ledge or boulder formation shall be replaced with suitable materials to provide a compacted earth cushion having a thickness between unremoved rock and the pipe of at least 8 inches or 1/2 inch for each foot of fill over the top of the pipe, whichever is greater, but not more than three-fourths the nominal diameter of the pipe. Where bell-and-spigot pipe is used, the cushion shall be maintained under the bell as well as under

the straight portion of the pipe. Rock excavation shall be as specified and defined in Section 02316 EXCAVATION, TRENCHING, AND BACKFILLING FOR UTILITIES SYSTEMS.

3.1.3 Removal of Unstable Material

Where wet or otherwise unstable soil incapable of properly supporting the pipe, as determined by the Contracting Officer, is unexpectedly encountered in the bottom of a trench, such material shall be removed to the depth required and replaced to the proper grade with select granular material, compacted as provided in paragraph BACKFILLING. When removal of unstable material is due to the fault or neglect of the Contractor in his performance of shoring and sheeting, water removal, or other specified requirements, such removal and replacement shall be performed at no additional cost to the Government.

3.2 BEDDING

The bedding surface for the pipe shall provide a firm foundation of uniform density throughout the entire length of the pipe.

3.2.1 Concrete Pipe Requirements

When no bedding class is specified or detailed on the drawings, concrete pipe shall be bedded in a soil foundation accurately shaped and rounded to conform to the lowest one-fourth of the outside portion of circular pipe or to the lower curved portion of pipe arch for the entire length of the pipe or pipe arch. When necessary, the bedding shall be tamped. Bell holes and depressions for joints shall be not more than the length, depth, and width required for properly making the particular type of joint.

3.3 PLACING PIPE

Each pipe shall be thoroughly examined before being laid; defective or damaged pipe shall not be used. Pipelines shall be laid to the grades and alignment indicated. Proper facilities shall be provided for lowering sections of pipe into trenches. Lifting lugs in vertically elongated metal pipe shall be placed in the same vertical plane as the major axis of the pipe. Pipe shall not be laid in water, and pipe shall not be laid when trench conditions or weather are unsuitable for such work. Diversion of drainage or dewatering of trenches during construction shall be provided as necessary.

3.3.1 Concrete Pipe

Laying shall proceed upgrade with spigot ends of bell-and-spigot pipe and tongue ends of tongue-and-groove pipe pointing in the direction of the flow.

3.3.2 Omitted
3.3.3 Omitted
3.3.4 Omitted
3.3.5 Omitted
3.3.6 Omitted
3.3.7 Omitted

3.3.8 Jacking Pipe Through Fills

Methods of operation and installation for jacking pipe through fills shall conform to requirements specified in Volume 1, Chapter 1, Part 4 of AREMA

Manual.

3.4 JOINTING

3.4.1 Concrete and Clay Pipe

3.4.1.1 Omitted
3.4.1.2 Omitted
3.4.1.3 Omitted
3.4.1.4 Omitted
3.4.1.5 Omitted
3.4.1.6 Omitted

3.4.1.7 Flexible Watertight Joints

Gaskets and jointing materials shall be as recommended by the particular manufacturer in regard to use of lubricants, cements, adhesives, and other special installation requirements. Surfaces to receive lubricants, cements, or adhesives shall be clean and dry. Gaskets and jointing materials shall be affixed to the pipe not more than 24 hours prior to the installation of the pipe, and shall be protected from the sun, blowing dust, and other deleterious agents at all times. Gaskets and jointing materials shall be inspected before installing the pipe; any loose or improperly affixed gaskets and jointing materials shall be removed and replaced. The pipe shall be aligned with the previously installed pipe, and the joint pushed home. If, while the joint is being made the gasket becomes visibly dislocated the pipe shall be removed and the joint remade.

3.5 DRAINAGE STRUCTURES

3.5.1 Manholes and Inlets

Construction shall be of reinforced concrete, plain concrete, brick, precast reinforced concrete, precast concrete segmental blocks, prefabricated corrugated metal, or bituminous coated corrugated metal; complete with frames and covers or gratings; and with fixed galvanized steel ladders where indicated. Pipe studs and junction chambers of prefabricated corrugated metal manholes shall be fully bituminous-coated and paved when the connecting branch lines are so treated. Pipe connections to concrete manholes and inlets shall be made with flexible, watertight connectors.

3.5.2 Walls and Headwalls

Construction shall be as indicated.

3.6 STEEL LADDER INSTALLATION

Ladder shall be adequately anchored to the wall by means of steel inserts spaced not more than 6 feet vertically, and shall be installed to provide at least 6 inches of space between the wall and the rungs. The wall along the line of the ladder shall be vertical for its entire length.

3.7 BACKFILLING

3.7.1 Backfilling Pipe in Trenches

After the pipe has been properly bedded, selected material from excavation or borrow, at a moisture content that will facilitate compaction, shall be

placed along both sides of pipe in layers not exceeding 6 inches in compacted depth. The backfill shall be brought up evenly on both sides of pipe for the full length of pipe. The fill shall be thoroughly compacted under the haunches of the pipe. Each layer shall be thoroughly compacted with mechanical tampers or rammers. This method of filling and compacting shall continue until the fill has reached an elevation of at least 12 inches above the top of the pipe. The remainder of the trench shall be backfilled and compacted by spreading and rolling or compacted by mechanical rammers or tampers in layers not exceeding 6 inches. Tests for density shall be made as necessary to ensure conformance to the compaction requirements specified below. Where it is necessary, in the opinion of the Contracting Officer, that sheeting or portions of bracing used be left in place, the contract will be adjusted accordingly. Untreated sheeting shall not be left in place beneath structures or pavements.

3.7.2 Backfilling Pipe in Fill Sections

For pipe placed in fill sections, backfill material and the placement and compaction procedures shall be as specified below. The fill material shall be uniformly spread in layers longitudinally on both sides of the pipe, not exceeding 6 inches in compacted depth, and shall be compacted by rolling parallel with pipe or by mechanical tamping or ramming. Prior to commencing normal filling operations, the crown width of the fill at a height of 12 inches above the top of the pipe shall extend a distance of not less than twice the outside pipe diameter on each side of the pipe or 12 feet, whichever is less. After the backfill has reached at least 12 inches above the top of the pipe, the remainder of the fill shall be placed and thoroughly compacted in layers not exceeding 6 inches.

3.7.3 Movement of Construction Machinery

When compacting by rolling or operating heavy equipment parallel with the pipe, displacement of or injury to the pipe shall be avoided. Movement of construction machinery over a culvert or storm drain at any stage of construction shall be at the Contractor's risk. Any damaged pipe shall be repaired or replaced.

3.7.4 Compaction

3.7.4.1 General Requirements

Cohesionless materials include gravels, gravel-sand mixtures, sands, and gravelly sands. Cohesive materials include clayey and silty gravels, gravel-silt mixtures, clayey and silty sands, sand-clay mixtures, clays, silts, and very fine sands. When results of compaction tests for moisture-density relations are recorded on graphs, cohesionless soils will show straight lines or reverse-shaped moisture-density curves, and cohesive soils will show normal moisture-density curves.

3.7.4.2 Minimum Density

Backfill over and around the pipe and backfill around and adjacent to drainage structures shall be compacted at the approved moisture content to the following applicable minimum density, which will be determined as specified below.

a. Under airfield and heliport pavements, paved roads, streets, parking areas, and similar-use pavements including adjacent shoulder areas, the density shall be not less than 90 percent of

maximum density for cohesive material and 95 percent of maximum density for cohesionless material, up to the elevation where requirements for pavement subgrade materials and compaction shall control.

b. Under unpaved or turfed traffic areas, density shall not be less than 90 percent of maximum density for cohesive material and 95 percent of maximum density for cohesionless material.

c. Under nontraffic areas, density shall be not less than that of the surrounding material.

3.7.5 Determination of Density

Testing shall be the responsibility of the Contractor and performed at no additional cost to the Government. Testing shall be performed by an approved commercial testing laboratory or by the Contractor subject to approval. Tests shall be performed in sufficient number to ensure that specified density is being obtained. Laboratory tests for moisture-density relations shall be made in accordance with ASTM D 1557 except that mechanical tampers may be used provided the results are correlated with those obtained with the specified hand tamper. Field density tests shall be determined in accordance with ASTM D 2167 or ASTM D 2922. When ASTM D 2922 is used, the calibration curves shall be checked and adjusted, if necessary, using the sand cone method as described in paragraph Calibration of the referenced publications. ASTM D 2922 results in a wet unit weight of soil and when using this method ASTM D 3017 shall be used to determine the moisture content of the soil. The calibration curves furnished with the moisture gauges shall be checked along with density calibration checks as described in ASTM D 3017 or ASTM D 2922. Test results shall be furnished the Contracting Officer. The calibration checks of both the density and moisture gauges shall be made at the beginning of a job on each different type of material encountered and at intervals as directed.

-- End of Section --

SECTION TABLE OF CONTENTS

DIVISION 02 - SITE WORK

SECTION 02714A

DRAINAGE LAYER

07/01

PART 1 GENERAL

1.1 REFERENCES
1.2 SUBMITTALS
1.3 OMITTED
1.4 SYSTEM DESCRIPTION
1.5 FIELD COMPACTION
1.6 EQUIPMENT
1.6.1 General Requirements
1.6.2 Placement Equipment
1.6.3 Compaction Equipment
1.6.4 Bituminous Mixing Plant
1.6.5 Cementitious Mixing Plant
1.7 WEATHER LIMITATION
1.8 SAMPLING AND TESTING
1.8.1 General Requirements
1.8.2 Sampling
1.8.3 Test Methods
1.8.3.1 Sieve Analyses
1.8.3.2 Omitted
1.8.3.3 Soundness Test
1.8.3.4 Los Angeles Abrasion Test
1.8.3.5 Flat or Elongated Particles Tests
1.8.3.6 Fractured Faces Tests
1.8.3.7 Bitumen Extraction
1.8.4 Initial Tests
1.8.5 Testing Frequency
1.8.5.1 Omitted
1.8.5.2 Stabilized Layer
1.8.6 Approval of Materials
1.8.6.1 Aggregate
1.8.6.2 Bituminous or Cementitious Materials

PART 2 PRODUCTS

2.1 GOVERNMENT APPROVAL
2.2 AGGREGATES
2.2.1 Aggregate Quality
2.2.2 Gradation Requirements
2.3 BITUMINOUS MATERIALS
2.4 CEMENTITIOUS MATERIALS
2.5 BITUMINOUS OR CEMENT STABILIZED JOB-MIX FORMULA

PART 3 EXECUTION

3.1 STOCKPILING AGGREGATES
3.2 TEST SECTION
3.2.1 Data

3.2.2 Scheduling
3.2.3 Location and Size
3.2.4 Initial Testing
3.2.5 Mixing, Placement, and Compaction
3.2.6 Procedure
3.2.6.1 Omitted
3.2.6.2 Bituminous/Cement Stabilized Drainage Layer
3.2.7 Evaluation
3.3 PREPARATION OF UNDERLYING COURSE
3.4 TRANSPORTING MATERIAL
3.4.1 Aggregate Drainage Layer Material
3.4.2 Bituminous Stabilized Material
3.4.3 Cement Stabilized Material
3.5 PLACING
3.5.1 General Requisites
3.5.2 Placement of Stabilized Material
3.5.3 Placing Adjacent Stabilized Strips
3.5.4 Hand Spreading
3.6 COMPACTION REQUIREMENTS
3.7 FINISHING
3.8 CURING OF CEMENT STABILIZED MATERIAL
3.9 EDGES OF DRAINAGE LAYER
3.10 SMOOTHNESS TEST
3.11 THICKNESS CONTROL
3.12 DEFICIENCIES
3.12.1 Grade and Thickness
3.12.2 Density
3.12.3 Smoothness

-- End of Section Table of Contents --

UFGS-02714A (July 2001)

SECTION 02714A

DRAINAGE LAYER
07/01

PART 1 GENERAL

1.1 REFERENCES

The publications listed below form a part of this specification to the extent referenced. The publications are referred to in the text by basic designation only.

AMERICAN ASSOCIATION OF STATE HIGHWAY AND TRANSPORTATION OFFICIALS (AASHTO)

AASHTO T 102	(1983; R 1996) Spot Test of Asphaltic Materials

AMERICAN SOCIETY FOR TESTING AND MATERIALS (ASTM)

ASTM C 29/C 29M	(1997) Bulk Density ("Unit Weight") and Voids in Aggregate
ASTM C 88	(1999a) Soundness of Aggregates by Use of Sodium Sulfate or Magnesium Sulfate
ASTM C 117	(1995) Materials Finer Than 75 micrometer (No. 200) Sieve in Mineral Aggregates by Washing
ASTM C 131	(1996) Resistance to Degradation of Small-Size Coarse Aggregate by Abrasion and Impact in the Los Angeles Machine
ASTM C 136	(1996a) Sieve Analysis of Fine and Coarse Aggregates
ASTM C 150	(1999a) Portland Cement
ASTM D 5	(1997) Penetration of Bituminous Materials
ASTM D 75	(1987; R 1997) Sampling Aggregates
ASTM D 140	(2000) Sampling Bituminous Materials
ASTM D 946	(1982; R 1999) Penetration-Graded Asphalt Cement for Use in Pavement Construction
ASTM D 1856	(1995a) Recovery of Asphalt From Solution By Abson Method
ASTM D 2172	(1995) Quantitative Extraction of Bitumen from Bituminous Paving Mixtures

ASTM D 2487	(2000) Classification of Soils for Engineering Purposes (Unified Soil Classification System)
ASTM D 4791	(1999) Flat Particles, Elongated Particles, or Flat and Elongated Particles in Coarse Aggregate
ASTM E 548	(1994el) General Criteria Used for Evaluating Laboratory Competence

1.2 SUBMITTALS

Government approval is required for submittals with a "G" designation; submittals not having a "G" designation are for information only. When used, a designation following the "G" designation identifies the office that will review the submittal for the Government. The following shall be submitted in accordance with Section 01330 SUBMITTAL PROCEDURES:

SD-03 Product Data

Waybills and Delivery Tickets

Certified waybills and delivery tickets for all aggregates, bituminous, and cementitious materials actually used.

SD-06 Test Reports

Sampling and Testing

Copies of field test results within 24 hours of completion of tests.

Approval of Materials

Material sources and material test results prior to field use.

Evaluation

Test section construction report.

1.3 OMITTED

1.4 SYSTEM DESCRIPTION

The Contractor shall build a drainage layer under the pavements as indicated on drawings and the drainage layer shall consist of Open Graded Material stabilized with cement or bituminous.

1.5 FIELD COMPACTION

Field compaction requirements shall be based on the results of a test section constructed by the Contractor, using the materials, methods, and equipment proposed for use in the work. The test section shall meet the requirements of paragraph TEST SECTION.

1.6 EQUIPMENT

1.6.1 General Requirements

All plant, equipment, and tools used in the performance of the work will be subject to approval before the work is started and shall be maintained in satisfactory working condition at all times.

1.6.2 Placement Equipment

An asphalt paving machine shall be used to place drainage layer material. Alternate methods may be used if it can be demonstrated in the test section that these methods obtain the specified results.

1.6.3 Compaction Equipment

A dual or single smooth 10 ton (min.) vibratory drum roller which provides a maximum compactive effort without crushing the drainage layer aggregate shall be used to compact drainage layer material.

1.6.4 Bituminous Mixing Plant

The bituminous mixing plant shall be an automatic or semiautomatic controlled, commercially manufactured unit capable of producing a bituminous stabilized aggregate mixture consistent with the job-mix formula (JMF). Drum mixers shall be prequalified at the production rate to be used during full scale operations. The prequalification tests shall include extraction methods in accordance with ASTM D 2172 and recovery of the asphalt cement in accordance with ASTM D 1856. The penetration of the recovered asphalt binder shall not be less than 60 percent of the original penetration in accordance with ASTM D 5.

1.6.5 Cementitious Mixing Plant

The cementitious mixing plant shall be an automatic or semiautomatic controlled, commercially manufactured unit capable of producing a cement stabilized aggregate mixture consistent with the job mix formula determined by the Government. Aggregate and cement shall be dry mixed sufficiently to prevent cement balls from forming when water is added.

1.7 WEATHER LIMITATION

Drainage layer material shall be placed when the atmospheric temperature is above 35 degrees F. Areas of completed drainage layer or underlying courses that are damaged by freezing, rainfall, or other weather conditions or by contamination from sediments, dust, dirt, or foreign material shall be corrected by the Contractor to meet specified requirements.

1.8 SAMPLING AND TESTING

1.8.1 General Requirements

Sampling and testing shall be the responsibility of the Contractor. Sampling and testing shall be performed by an approved commercial testing laboratory, or by the Contractor subject to approval. If the Contractor elects to establish testing facilities of his own, approval of such facilities shall be based on compliance with ASTM E 548, and no work requiring testing will be permitted until the Contractor's facilities have been inspected and approved. The first inspection of the facilities will be at the expense of the Government and any subsequent inspections required because of failure of the first inspection shall be at the expense of the

Contractor. Such costs will be deducted from the total amount due the Contractor. Drainage layer materials shall be tested to establish compliance with the specified requirements.

1.8.2 Sampling

Aggregate samples shall be taken in accordance with ASTM D 75. Bituminous samples shall be taken in accordance with ASTM D 140. Bituminous or cement stabilized mixture samples shall be taken using methods approved by the Contracting Officer.

1.8.3 Test Methods

1.8.3.1 Sieve Analyses

Sieve analyses shall be made in accordance with ASTM C 117 and ASTM C 136.

1.8.3.2 Omitted

1.8.3.3 Soundness Test

Soundness tests shall be made in accordance with ASTM C 88.

1.8.3.4 Los Angeles Abrasion Test

Los Angeles abrasion tests shall be made in accordance with ASTM C 131.

1.8.3.5 Flat or Elongated Particles Tests

Flat and/or elongated particles tests shall be made in accordance with ASTM D 4791.

1.8.3.6 Fractured Faces Tests

When aggregates are supplied from crushed gravel, approved test methods shall be used to assure the aggregate meets the requirements for fractured faces in paragraph AGGREGATES.

1.8.3.7 Bitumen Extraction

Bitumen extraction tests shall be made in accordance with ASTM D 2172.

1.8.4 Initial Tests

One of each of the following tests shall be performed on the proposed material prior to commencing construction to demonstrate that the proposed material meets all specified requirements when furnished. If materials from more than one source are going to be utilized, this testing shall be completed for each source.

a. Sieve Analysis including 0.02mm size material.

b. Flat and/or elongated particles

c. Fractured Faces

d. Los Angeles abrasion.

e. Soundness.

1.8.5 Testing Frequency

1.8.5.1 Omitted

1.8.5.2 Stabilized Layer

Sieve analyses shall be performed on aggregates prior to addition of asphalt or portland cement, at a rate of at least one test for every 6000 square yards of completed area and not less than one test for each days production. Extraction tests on bituminous stabilized material shall be made at the same frequency. Soundness tests, Los Angeles abrasion tests, fractured faces tests, and flat and/or elongated particles tests shall be performed at the rate of one test for every 12,000 square yards of production.

1.8.6 Approval of Materials

1.8.6.1 Aggregate

The aggregate source shall be selected at least 60 days prior to field use in the test section. Tentative approval of the source will be based on certified test results to verify that materials proposed for use meet the contract requirements. Final approval of both the source and the material will be based on test section performance and tests for gradation, soundness, Los Angeles abrasion, flat and/or elongated particles tests and fractured faces tests. For aggregate drainage layer materials, these tests shall be performed on samples taken from the completed and compacted drainage layer course within the test section. For bituminous or cement stabilized drainage layer material, these tests shall be performed on aggregate samples taken prior to addition of bituminous or cementitious material and subsequent placement in the test section.

1.8.6.2 Bituminous or Cementitious Materials

Bituminous or cementitious sources and certified material test results shall be submitted for approval not less than 60 days prior to field use in the test section.

PART 2 PRODUCTS

2.1 GOVERNMENT APPROVAL

Asphalt or cement stabilized material will require Government notification and delivery of approved materials in accordance with paragraph BITUMINOUS OR CEMENT STABILIZED JOB-MIX FORMULA.

2.2 AGGREGATES

Aggregates shall consist of clean, sound, hard, durable, angular particles of crushed stone, crushed slag, or crushed gravel which meet the specification requirements. Slag shall be an air-cooled, blast-furnace product having a dry weight of not less than 65 pcf determined by ASTM C 29/C 29M. The aggregates shall be free of silt and clay as defined by ASTM D 2487, vegetable matter, and other objectionable materials or coatings.

2.2.1 Aggregate Quality

The aggregate shall have a soundness loss not greater than 18 percent

weighted averaged at 5 cycles when tested in magnesium sulfate in accordance with ASTM C 88. The aggregate shall have a percentage of loss on abrasion not to exceed 42 after 500 revolutions as determined by ASTM C 131. The percentage of flat and/or elongated particles shall be determined by ASTM D 4791 with the following modifications. The aggregates shall be separated into 2 size fractions. Particles greater than 1/2 inch sieve and particles passing the 1/2 inch sieve and retained on the No. 4 sieve. The percentage of flat and/or elongated particles in either fraction shall not exceed 20. A flat particle is one having a ratio of width to thickness greater than 3; an elongated particle is one having a ratio of length to width greater than 3. When the aggregate is supplied from more than one source, aggregate from each source shall meet the specified requirements. When the aggregate is supplied from crushed gravel it shall be manufactured from gravel particles, 90 percent of which by weight are retained on the maximum-size sieve listed in TABLE I. In the portion retained on each sieve specified, the crushed gravel shall contain at least 90 percent by weight of crushed pieces having two or more freshly fractured faces with the area of each face being at least equal to 75 percent of the smallest midsectional area of the face. When two fractures are contiguous, the angle between planes of the fractures must be at least 30 degrees in order to count as 2 fractured faces.

2.2.2 Gradation Requirements

Drainage layer aggregates shall be well graded within the limits specified in TABLE I.

TABLE I. GRADATION OF DRAINAGE LAYER MATERIAL

Percentage by Weight Passing Square-Mesh Sieve

Sieve Designation	OGM Stabilized
1-1/2 inch	100
1 inch	95-100
3/4 inch	---
1/2 inch	25-80
3/8 inch	---
No. 4	0-10
No. 8	0-5
No. 16	---

NOTE 1: The values are based on aggregates of uniform specific gravity, and the percentages passing the various sieves may require appropriate correction by the Contracting Officer when aggregates of varying specific gravities are used.

NOTE 2: Asphalt cement or portland cement will be required to stabilize the OGM.

2.3 BITUMINOUS MATERIALS

Asphalt cement to be mixed with aggregates shall conform to ASTM D 946, penetration Grade 85-100. In addition, the asphalt cement shall show a negative spot when subjected to the spot test in accordance with AASHTO T 102, using the standard naphtha specified.

2.4 CEMENTITIOUS MATERIALS

Portland cement to be mixed with aggregates shall conform to ASTM C 150, Type I or II.

2.5 BITUMINOUS OR CEMENT STABILIZED JOB-MIX FORMULA

The bituminous stabilized mix shall consist of a mixture of OGM and a minimum of 2 percent asphalt cement by weight. Tolerances for bituminous stabilized material shall be maintained for field production at plus or minus 0.25 percent for asphalt cement and plus or minus 25 degrees F for mixing temperatures. The cement stabilized mix shall consist of OGM and a minimum of 200 pounds of portland cement per cubic yard with a water/cement ratio of 0.37. Based on the test section performance, the Contractor shall be responsible for adjustments (increases) in asphalt cement or portland cement quantities to ensure the stabilized drainage layer will not rut or be disturbed by the Contractor's proposed paving method. The Contractor shall submit a job-mix formula (JMF) with the test section report for Contracting Officer approval.

PART 3 EXECUTION

3.1 STOCKPILING AGGREGATES

Aggregates shall be stockpiled at locations designated by the Contracting Officer. Stockpile areas shall be cleared and leveled prior to stockpiling aggregates. Aggregates shall be stockpiled to prevent segregation and contamination. Aggregates obtained from different sources shall be stockpiled separately.

3.2 TEST SECTION

3.2.1 Data

A test section shall be constructed to evaluate the ability to carry traffic, including placement of overlaying material and the constructability of the drainage layer including required mixing, placement, and compaction procedures. Test section data will be used by the Contracting Officer to validate the required number of compaction passes given in paragraph Compaction Requirements and the field dry density requirements for full scale production.

3.2.2 Scheduling

The test section shall be constructed a minimum of 30 days prior to the start of full scale production to provide sufficient time for an evaluation of the proposed materials, equipment and procedures including Government QA testing.

3.2.3 Location and Size

The test section shall be placed inside the production paving limits approved by the Contracting Officer. The underlying courses and subgrade preparation, required for the pavement section, shall be completed, inspected and approved in the test section prior to constructing the drainage layer. The test section shall be a minimum of 100 feet long and two full paving lanes wide side by side.

3.2.4 Initial Testing

Certified test results, to verify that the materials proposed for use in

the test section meet the contract requirements, shall be provided by the Contractor and approved by the Contracting Officer prior to the start of the test section.

3.2.5 Mixing, Placement, and Compaction

Mixing, placement, and compaction shall be accomplished using equipment meeting the requirements of paragraph EQUIPMENT. Compaction equipment speed shall be no greater than 1.5 miles per hour. Compaction shall start from the outside edges of the paving lane and proceed to the centerline of the lift being placed. The roller shall stay a minimum of one half the roller width from the outside edge of the drainage layer being placed until the desired density is obtained. The outside edge shall then be rolled.

3.2.6 Procedure

3.2.6.1 Omitted

3.2.6.2 Bituminous/Cement Stabilized Drainage Layer

The test section shall be constructed with the same equipment used for production. Three separate areas within the test section shall be designated for sampling. All testing shall be completed in the middle third of the test section being placed. Visual examination of each sample shall be made by the contracting officer to determine if and when crushing of aggregate occurs. One sample shall be taken by the contractor before compaction and after each subsequent compaction pass at three separate locations as directed by the Contracting Officer. Compaction shall continue for a maximum of 6 passes. A pass shall be considered the movement of a roller over the drainage layer area for one direction only. Placement procedures and equipment shall be as described herein. The contracting officer shall determine the number of passes required for compaction from the test section.

3.2.7 Evaluation

Within 10 days of completion of the test section, the Contractor shall submit to the Contracting Officer a Test Section Construction Report complete with all required test data and correlations. The Contracting Officer will evaluate the data and validate the required number of passes of the roller, the need for a final static pass of the roller, and provide the dry density for field density control during construction.

3.3 PREPARATION OF UNDERLYING COURSE

Prior to constructing the drainage layer, the underlying course shall be cleaned of all foreign materials. During construction, the underlying course shall contain no frozen material. The underlying course shall conform to Section 02722 BASE COURSE. Ruts or soft yielding spots in the underlying courses having inadequate compaction and deviations of the surface from the requirements set forth herein shall be corrected by loosening and removing soft or unsatisfactory material and by adding approved material, reshaping to line, and grade, and recompacting to specified density. The finished underlying course shall not be disturbed by traffic or other operations and shall be maintained by the Contractor in a satisfactory condition until the drainage layer is placed.

3.4 TRANSPORTING MATERIAL

3.4.1 Aggregate Drainage Layer Material

Aggregate drainage layer material shall be transported to the site in a manner which prevents segregation and contamination of materials.

3.4.2 Bituminous Stabilized Material

Bituminous stabilized material shall be transported from the mixing plant to the site in trucks having tight, clean, smooth beds lightly coated with an approved releasing agent to prevent adhesion of the stabilized material to the truck beds. Excessive releasing agent shall be drained prior to loading. Each load shall be covered with canvas or other approved material of ample size to protect the stabilized material from the weather and to prevent loss of heat. Loads that have crusts of cold, unworkable material or have become wet will be rejected. Hauling over freshly placed material will not be permitted.

3.4.3 Cement Stabilized Material

Cement stabilized material shall be transported from the mixing plant to the site in trucks equipped with protective covers. Loads that have crusts of unworkable material or have become excessively wet will be rejected. Hauling over freshly placed material will not be permitted.

3.5 PLACING

3.5.1 General Requisites

Drainage layer material shall be placed on the underlying course in lifts of uniform thickness using equipment meeting the requirements of paragraph EQUIPMENT. When a compacted layer 6 inches or less in thickness is required, the material shall be placed in a single lift. When a compacted layer in excess of 6 inches is required, the material shall be placed in lifts of equal thickness. No lift shall exceed 6 inches or be less than 3 inches when compacted. The lifts when compacted after placement shall be true to the grades or levels required with the least possible surface disturbance. Where the drainage layer is placed in more than one lift, the previously constructed lift shall be cleaned of loose and foreign material. Such adjustments in placing procedures or equipment shall be made to obtain true grades and minimize segregation and degradation of the drainage layer material.

3.5.2 Placement of Stabilized Material

Bituminous stabilized material having temperatures less than 175 degrees F when dumped into the asphalt paving machine will be rejected. The paving machine shall be adjusted so that the surface of the lift being laid will be smooth and continuous without tears and pulls. Irregularities in alignment of the lift left by the paving machine shall be corrected by trimming directly behind the machine. Immediately after trimming, the edges of the lift shall be thoroughly compacted by a method approved by the Contracting Officer. Distortion of the lift during tamping will not be permitted. If more than one lift is required, the longitudinal joint in one lift shall offset that in the lift immediately below by at least 1 foot; however, the joint in the top layer shall be at the centerline of the pavement. Transverse joints in one layer shall be offset by at least 2 feet from transverse joints in the previous layer. Transverse joints in adjacent strips shall be offset a minimum of 10 feet.At the end of each day's construction, a straight transverse construction joint shall be

formed by cutting back into the completed work to form a true vertical face free of loose or shattered material. Material along construction joints not properly compacted shall be removed.

3.5.3 Placing Adjacent Stabilized Strips

The stabilized material shall be placed in consecutive adjacent strips having a minimum width of 10 feet, except where edge lanes require strips less than 10 feet to complete the area. In placing adjacent strips, the screed of the paving machine shall overlap the previously placed strip 3 to 4 inches and shall be sufficiently high so that compaction will produce a smooth, dense joint. The stabilized material placed on the edge of the previously placed strip by the paver shall be pushed back to the edge of the strip being placed. Excess stabilized material shall be removed and wasted.

3.5.4 Hand Spreading

In areas where machine spreading is impractical, drainage layer material shall be spread by hand. The material shall be spread uniformly in a loose layer to prevent segregation. The material shall conform to the required grade and thickness after compaction.

3.6 COMPACTION REQUIREMENTS

Compaction shall be accomplished using rollers meeting the requirements of paragraph EQUIPMENT and operating at a rolling speed of no greater than 1.5 miles per hour. Each lift of drainage material, including shoulders when specified under the shoulders, shall be compacted with the number of passes of the roller as follows: RDM material shall use 4 passes in the vibratory state and one in the static. Cement or Bituminous stabilized OGM material shall use 3 passes in the vibratory state and one in the static state. OGM stabilized with choke stone shall use 4 passes in the vibratory state on OGM and 2 additional roller passes on the choke stone in the vibratory state with wetting.The Contracting Officer will validate the number of roller passes after the test section is evaluated and before production starts. In addition, a minimum field dry density, as specified by the Contracting Officer, shall be maintained. If the required field dry density is not obtained, the number of roller passes shall be adjusted in accordance with paragraph DEFICIENCIES. Aggregate shall be compacted in a moisture state as determined in the test section. Excessive rolling resulting in crushing of aggregate particles shall be avoided. Choke stone used to stabilize the surface of the OGM shall be worked into the surface of the OGM by two passes of a vibratory roller and wetting. Compaction of bituminous stabilized material shall begin immediately when the material has cooled to 170 degrees F. Not more than 30 minutes shall elapse between the start of moist mixing of cement stabilized material and the start of field compaction and field compaction shall be completed within 60 minutes. In all places not accessible to the rollers, the drainage layer material shall be compacted with mechanical hand operated tampers.

3.7 FINISHING

The top surface of the drainage layer shall be finished after final compaction as determined from the test section. Adjustments in rolling and finishing procedures shall be made to obtain grades and minimize segregation and degradation of the drainage layer material.

3.8 CURING OF CEMENT STABILIZED MATERIAL

The completed cement stabilized drainage layer shall be cured with water for a period of 12 hours following completion of compaction. Curing operations shall commence within 3 hours after compaction. Curing shall consist of one of the following: 1) Sprinkling the surface of the drainage layer with a fine spray of water every 2 hours for the required 12 hour period, 2) by continuously saturated burlap or cotton mats, or by continuously saturated plastic coated burlap, 3)Impervious sheet curing.Curing water shall be applied so that the cement paste on the surface of the mixture will not be eroded. Water trucks will not be permitted on the completed cement stabilized drainage layer. Impervious sheeting curing shall consist of all surfaces being thoroughly wetted and then completely covered with the sheeting. Sheeting shall be at least 18 inches wider than the stabilized drainage layer surface to be covered. Covering shall be laid with light-colored side up. Covering shall be lapped not less than 12 inches and securely weighted to prevent displacement so that it remains in contact with the surface during the specified length of curing. Coverings shall be folded down over exposed edges of slabs and secured by approved means. Sheets shall be immediately repaired or replaced if tears of holes appear during the curing period

3.9 EDGES OF DRAINAGE LAYER

Shoulder material shall be placed along the edges of the drainage layer course in a quantity that will compact to the thickness of the layer being constructed. At least 3 feet width of the shoulder shall be rolled and compacted simultaneously with the rolling and compacting of each lift of the drainage layer.

3.10 SMOOTHNESS TEST

The surface of the top lift shall not deviate more than 3/8 inch when tested with either a 10 or 12 foot straightedge applied parallel with and at right angles to the centerline of the area to be paved. Deviations exceeding 3/8 inch shall be corrected in accordance with paragraph DEFICIENCIES.

3.11 THICKNESS CONTROL

The completed thickness of the drainage layer shall be within 1/2 inch of the thickness indicated. Thickness shall be measured at intervals providing at least one measurement for each 500 square yards of drainage layer. Measurements shall be made in test holes at least 3 inches in diameter unless the contractor can demonstrate, for COR approval, that a steel rod pushed through the drainage layer clearly stops at the material interface. Where the measured thickness is more than 1/2 inch deficient, such areas shall be corrected in accordance with paragraph DEFICIENCIES. Where the measured thickness is 1/2 inch more than indicated, it will be considered as conforming to the requirements plus 1/2 inch, provided the surface of the drainage layer is within 1/2 inch of established grade. The average job thickness shall be the average of all job measurements as specified above but within 1/4 inch of the thickness shown on the drawings.

3.12 DEFICIENCIES

3.12.1 Grade and Thickness

Deficiencies in grade and thickness shall be corrected so that both grade and thickness tolerances are met. Thin layers of material shall not be

added to the top surface of the drainage layer to meet grade or increase thickness. If the elevation of the top of the drainage layer is more than 1/2 inch above the plan grade it shall be trimmed to grade and finished in accordance with paragraph FINISHING. If the elevation of the top surface of the drainage layer is 1/2 inch or more below the required grade, the surface of the drainage layer shall be scarified to a depth of at least 3 inches, new material shall be added, and the layer shall be blended and recompacted to bring it to grade. Where the measured thickness of the drainage layer is more than 1/2 inch deficient, such areas shall be corrected by excavating to the required depth and replaced with new material to obtain a compacted lift thickness of at least 3 inches. The depth of required excavation shall be controlled to keep the final surface elevation within grade requirements and to preserve layer thicknesses of materials below the drainage layer.

3.12.2 Density

Density shall be considered deficient if the field dry density test results are below the dry density specified by the Contracting Officer. If the densities are deficient, the layer shall be rolled with 2 additional passes of the specified roller. If the dry density is still deficient, work will be stopped until the cause of the low dry densities can be determined and reported to the Contracting Officer.

3.12.3 Smoothness

Deficiencies in smoothness shall be corrected as if they are deficiencies in grade or thickness. All tolerances for grade and thickness shall be maintained while correcting smoothness deficiencies.

-- End of Section --

SECTION TABLE OF CONTENTS

DIVISION 02 - SITE WORK

SECTION 02722A

GRADED-CRUSHED AGGREGATE BASE COURSE (SEPARATION LAYER AND BASE COURSE)

05/01

PART 1 GENERAL

1.1 REFERENCES
1.2 DEFINITIONS
1.2.1 Omitted
1.2.2 Graded-crushed Aggregate Base Course
1.2.3 Degree of Compaction
1.3 OMITTED
1.4 SUBMITTALS
1.5 SAMPLING AND TESTING
1.5.1 Sampling
1.5.2 Tests
1.5.2.1 Sieve Analysis
1.5.2.2 Liquid Limit and Plasticity Index
1.5.2.3 Moisture-Density Determinations
1.5.2.4 Field Density Tests
1.5.2.5 Wear Test
1.5.2.6 Soundness
1.5.2.7 Weight of Slag
1.5.3 Testing Frequency
1.5.3.1 Initial Tests
1.5.3.2 In Place Tests
1.5.4 Approval of Material
1.6 WEATHER LIMITATIONS
1.7 PLANT, EQUIPMENT, AND TOOLS

PART 2 PRODUCTS

2.1 AGGREGATES
2.1.1 Coarse Aggregate
2.1.1.1 Omitted
2.1.1.2 Graded-Crushed Aggregate Base Course
2.1.2 Fine Aggregate
2.1.2.1 Omitted
2.1.2.2 Graded-Crushed Aggregate Base Course
2.1.3 Gradation Requirements
2.1.4 Liquid Limit and Plasticity Index

PART 3 EXECUTION

3.1 GENERAL REQUIREMENTS
3.2 OMITTED
3.3 STOCKPILING MATERIAL
3.4 PREPARATION OF UNDERLYING COURSE
3.5 INSTALLATION
3.5.1 Mixing the Materials
3.5.2 Placing
3.5.3 Grade Control

3.5.4 Edges of Base Course
3.5.5 Compaction
3.5.6 Thickness
3.5.7 Proof Rolling
3.5.8 Finishing
3.5.9 Smoothness
3.6 TRAFFIC
3.7 MAINTENANCE
3.8 DISPOSAL OF UNSATISFACTORY MATERIALS

-- End of Section Table of Contents --

UFGS-02722A (May 2001)

SECTION 02722A

GRADED-CRUSHED AGGREGATE BASE COURSE
(SEPARATION LAYER AND BASE COURSE)
05/01

PART 1 GENERAL

1.1 REFERENCES

The publications listed below form a part of this specification to the extent referenced. The publications are referred to in the text by basic designation only.

AMERICAN ASSOCIATION OF STATE HIGHWAY AND TRANSPORTATION OFFICIALS (AASHTO)

AASHTO T 224	(1996) Correction for Coarse Particles in the Soil Compaction Test

AMERICAN SOCIETY FOR TESTING AND MATERIALS (ASTM)

ASTM C 29/C 29M	(1997) Bulk Density ("Unit Weight") and Voids in Aggregates
ASTM C 88	(1999a) Soundness of Aggregates by Use of Sodium Sulfate or Magnesium Sulfate
ASTM C 117	(1995) Materials Finer Than 75 micrometer (No. 200) Sieve in Mineral Aggregates by Washing
ASTM C 127	(1988; R 1993el) Specific Gravity and Absorption of Course Aggregate
ASTM C 128	(1997) Specific Gravity and Absorption of Fine Aggregate
ASTM C 131	(1996) Resistance to Degradation of Small-Size Coarse Aggregate by Abrasion and Impact in the Los Angeles Machine
ASTM C 136	(1996a) Sieve Analysis of Fine and Coarse Aggregates
ASTM D 75	(1987; R 1997) Sampling Aggregates
ASTM D 1556	(2000) Density and Unit Weight of Soil in Place by the Sand-Cone Method
ASTM D 1557	(1991; R 1998) Laboratory Compaction Characteristics of Soil Using Modified Effort (56,000 ft-lbf/cu. ft. (2,700

	kN-m/cu.m.))
ASTM D 2487	(2000) Classification of Soils for Engineering Purposes (Unified Soil Classification System)
ASTM D 2922	(1996el) Density of Soil and Soil-Aggregate in Place by Nuclear Methods (Shallow Depth)
ASTM D 3017	(1988; R 1996el) Water Content of Soil and Rock in Place by Nuclear Methods (Shallow Depth)
ASTM D 4318	(2000) Liquid Limit, Plastic Limit, and Plasticity Index of Soils
ASTM E 11	(1995) Wire-Cloth Sieves for Testing Purposes

1.2 DEFINITIONS

For the purposes of this specification, the following definitions apply.

1.2.1 Omitted

1.2.2 Graded-crushed Aggregate Base Course

Graded-crushed aggregate (GCA) base course is well graded, crushed, durable aggregate uniformly moistened and mechanically stabilized by compaction.

1.2.3 Degree of Compaction

Degree of compaction shall be expressed as a percentage of the maximum density obtained by the test procedure presented in ASTM D 1557, Method D and corrected with AASHTO T 224.

1.3 OMITTED

1.4 SUBMITTALS

Government approval is required for submittals with a "G" designation; submittals not having a "G" designation are for information only. When used, a designation following the "G" designation identifies the office that will review the submittal for the Government. The following shall be submitted in accordance with Section 01330 SUBMITTAL PROCEDURES:

SD-03 Product Data

Plant, Equipment, and Tools

List of proposed equipment to be used in performance of construction work, including descriptive data.

Waybills and Delivery Tickets

Copies of waybills and delivery tickets during the progress of the work. Before the final statement is allowed, the Contractor shall file certified waybills and certified delivery tickets for

all aggregates actually used.

SD-06 Test Reports

Sampling and testing
Field Density Tests

Calibration curves and related test results prior to using the device or equipment being calibrated. Copies of field test results within 24 hours after the tests are performed. Certified copies of test results for approval not less than 30 days before material is required for the work.

1.5 SAMPLING AND TESTING

Sampling and testing shall be the responsibility of the Contractor. Sampling and testing shall be performed by a testing laboratory approved in accordance with Section 01451 CONTRACTOR QUALITY CONTROL. Work requiring testing will not be permitted until the testing laboratory has been inspected and approved. The materials shall be tested to establish compliance with the specified requirements; testing shall be performed at the specified frequency. The Contracting Officer may specify the time and location of the tests. Copies of test results shall be furnished to the Contracting Officer within 24 hours of completion of the tests.

1.5.1 Sampling

Samples for laboratory testing shall be taken in conformance with ASTM D 75. When deemed necessary, the sampling will be observed by the Contracting Officer.

1.5.2 Tests

The following tests shall be performed in conformance with the applicable standards listed.

1.5.2.1 Sieve Analysis

Sieve analysis shall be made in conformance with ASTM C 117 and ASTM C 136. Sieves shall conform to ASTM E 11. .

1.5.2.2 Liquid Limit and Plasticity Index

Liquid limit and plasticity index shall be determined in accordance with ASTM D 4318.

1.5.2.3 Moisture-Density Determinations

The maximum density and optimum moisture content shall be determined in accordance with ASTM D 1557.

1.5.2.4 Field Density Tests

Density shall be field measured in accordance with ASTM D 1556 or ASTM D 2922. For the method presented in ASTM D 2922 the calibration curves shall be checked and adjusted if necessary using only the sand cone method as described in paragraph Calibration, of the ASTM publication. Tests performed in accordance with ASTM D 2922 result in a wet unit weight of soil and when using this method, ASTM D 3017 shall be used to determine the

moisture content of the soil. The calibration curves furnished with the moisture gauges shall also be checked along with density calibration checks as described in ASTM D 3017. The calibration checks of both the density and moisture gauges shall be made by the prepared containers of material method, as described in paragraph Calibration of ASTM D 2922, on each different type of material being tested at the beginning of a job and at intervals as directed.

1.5.2.5 Wear Test

Wear tests shall be made on GCA course material in conformance with ASTM C 131.

1.5.2.6 Soundness

Soundness tests shall be made on GCA in accordance with ASTM C 88.

1.5.2.7 Weight of Slag

Weight per cubic foot of slag shall be determined in accordance with ASTM C 29/C 29M on the GCA course material.

1.5.3 Testing Frequency

1.5.3.1 Initial Tests

One of each of the following tests shall be performed on the proposed material prior to commencing construction to demonstrate that the proposed material meets all specified requirements when furnished. If materials from more than one source are going to be utilized, this testing shall be completed for each source.

a. Sieve Analysis.

b. Liquid limit and plasticity index.

c. Moisture-density relationship.

d. Wear.

e. Soundness.

f. Weight per cubic foot of Slag.

1.5.3.2 In Place Tests

Each of the following tests shall be performed on samples taken from the placed and compacted GCA. Samples shall be taken and tested at the rates indicated.

a. Density tests shall be performed on every lift of material placed and at a frequency of one set of tests for every 250 square yards, or portion thereof, of completed area.

b. Sieve Analysis including No. 635 size material shall be performed for every 1000 tons, or portion thereof, of material placed.

c. Liquid limit and plasticity index tests shall be performed at the same frequency as the sieve analysis.

1.5.4 Approval of Material

The source of the material shall be selected 30 days prior to the time the material will be required in the work. Tentative approval of material will be based on initial test results. Final approval of the materials will be based on sieve analysis, liquid limit, and plasticity index tests performed on samples taken from the completed and fully compacted GCA.

1.6 WEATHER LIMITATIONS

Construction shall be done when the atmospheric temperature is above 35 degrees F. When the temperature falls below 35 degrees F, the Contractor shall protect all completed areas by approved methods against detrimental effects of freezing. Completed areas damaged by freezing, rainfall, or other weather conditions shall be corrected to meet specified requirements.

1.7 PLANT, EQUIPMENT, AND TOOLS

All plant, equipment, and tools used in the performance of the work will be subject to approval before the work is started and shall be maintained in satisfactory working condition at all times. The equipment shall be adequate and shall have the capability of producing the required compaction, meeting grade controls, thickness control, and smoothness requirements as set forth herein.

PART 2 PRODUCTS

2.1 AGGREGATES

The GCA shall consist of clean, sound, durable particles of crushed stone, crushed slag, crushed gravel, crushed recycled concrete, angular sand, or other approved material. GCA shall be free of silt and clay as defined by ASTM D 2487, organic matter, and other objectionable materials or coatings. The portion retained on the No. 4 sieve shall be known as coarse aggregate; that portion passing the No. 4 sieve shall be known as fine aggregate.

2.1.1 Coarse Aggregate

Coarse aggregates shall be angular particles of uniform density. When the coarse aggregate is supplied from more than one source, aggregate from each source shall meet the specified requirements and shall be stockpiled separately.

a. Crushed Gravel: Crushed gravel shall be manufactured by crushing gravels, and shall meet all the requirements specified below.

b. Crushed Stone: Crushed stone shall consist of freshly mined quarry rock, and shall meet all the requirements specified below.

c. Crushed Recycled Concrete: Crushed recycled concrete shall consist of previously hardened portland cement concrete or other concrete containing pozzolanic binder material. The recycled material shall be free of all reinforcing steel, bituminous concrete surfacing, and any other foreign material and shall be crushed and processed to meet the required gradations for coarse aggregate. Crushed recycled concrete shall meet all other applicable requirements specified below.

d. Crushed Slag: Crushed slag shall be an air-cooled blast-furnace product having an air dry unit weight of not less than 65 pcf as determined by ASTM C 29/C 29M, and shall meet all the requirements specified below.

2.1.1.1 Omitted

2.1.1.2 Graded-Crushed Aggregate Base Course

GCA coarse aggregate shall not show more than 40 percent loss when subjected to the Los Angeles abrasion test in accordance with ASTM C 131. GCA coarse aggregate shall not exhibit a loss greater than 40 percent weighted average, at five cycles, when tested for soundness in magnesium sulfate in accordance with ASTM C 88. The amount of flat and elongated particles shall not exceed 20 percent for the fraction retained on the 1/2 inch sieve nor 20 percent for the fraction passing the 1/2 inch sieve. A flat particle is one having a ratio of width to thickness greater than 3; an elongated particle is one having a ratio of length to width greater than 3. In the portion retained on each sieve specified, the crushed aggregate shall contain at least 90 percent by weight of crushed pieces having two or more freshly fractured faces with the area of each face being at least equal to 75 percent of the smallest midsectional area of the piece. When two fractures are contiguous, the angle between planes of the fractures must be at least 30 degrees in order to count as two fractured faces. Crushed gravel shall be manufactured from gravel particles 90 percent of which by weight are retained on the maximum size sieve listed in TABLE 1.

2.1.2 Fine Aggregate

Fine aggregates shall be angular particles of uniform density. When the fine aggregate is supplied from more than one source, aggregate from each source shall meet the specified requirements.

2.1.2.1 Omitted

2.1.2.2 Graded-Crushed Aggregate Base Course

GCA fine aggregate shall consist of angular particles produced by crushing stone, slag, recycled concrete, or gravel that meets the requirements for wear and soundness specified for GCA coarse aggregate. Fine aggregate shall be produced by crushing only particles larger than No. 4 sieve in size. The fine aggregate shall contain at least 90 percent by weight of particles having two or more freshly fractured faces in the portion passing the No. 4 sieve and retained on the No. 10 sieve, and in the portion passing the No. 10 sieve and retained on the No. 40 sieve.

2.1.3 Gradation Requirements

The specified gradation requirements shall apply to the completed base course. The aggregates shall have a maximum size of 1-1/2 inches and shall be continuously well graded within the limits specified in TABLE 1. Sieves shall conform to ASTM E 11.

TABLE I. GRADATION OF AGGREGATES

Percentage by Weight Passing Square-Mesh Sieve

Sieve Designation	No. 1	No. 2
2 inch	100	----
1-1/2 inch	70-100	100
1 inch	45-80	60-100
1/2 inch	30-60	30-65
No. 4	20-50	20-50
No. 10	15-40	15-40
No. 40	5-25	5-25
No. 200	0-8	0-8

NOTE 1: Particles having diameters less than 0.0008 inch shall not be in excess of 3 percent by weight of the total sample tested.

NOTE 2: The values are based on aggregates of uniform specific gravity. If materials from different sources are used for the coarse and fine aggregates, they shall be tested in accordance with ASTM C 127 and ASTM C 128 to determine their specific gravities. If the specific gravities vary by more than 10 percent, the percentages passing the various sieves shall be corrected as directed by the Contracting Officer.

2.1.4 Liquid Limit and Plasticity Index

Liquid limit and plasticity index requirements shall apply to the completed course and shall also apply to any component that is blended to meet the required gradation. The portion of any component or of the completed course passing the No. 40 sieve shall be either nonplastic or have a liquid limit not greater than 25 and a plasticity index not greater than 5.

PART 3 EXECUTION

3.1 GENERAL REQUIREMENTS

When the GCA is constructed in more than one layer, the previously constructed layer shall be cleaned of loose and foreign matter by sweeping with power sweepers or power brooms, except that hand brooms may be used in areas where power cleaning is not practicable. Adequate drainage shall be provided during the entire period of construction to prevent water from collecting or standing on the working area. Line and grade stakes shall be provided as necessary for control. Grade stakes shall be in lines parallel to the centerline of the area under construction and suitably spaced for string lining.

3.2 OMITTED

3.3 STOCKPILING MATERIAL

Prior to stockpiling of material, storage sites shall be cleared and leveled by the Contractor. All materials, including approved material available from excavation and grading, shall be stockpiled in the manner and at the locations designated. Aggregates shall be stockpiled on the cleared and leveled areas designated by the Contracting Officer to prevent segregation. Materials obtained from different sources shall be stockpiled

separately.

3.4 PREPARATION OF UNDERLYING COURSE

Prior to constructing the GCA, the underlying course or subgrade shall be cleaned of all foreign substances. At the time of construction of the GCA, the underlying course shall contain no frozen material. The surface of the underlying course or subgrade shall meet specified compaction and surface tolerances. The underlying course shall conform to Section 02300 EARTHWORK. Ruts or soft yielding spots in the underlying courses, areas having inadequate compaction, and deviations of the surface from the requirements set forth herein shall be corrected by loosening and removing soft or unsatisfactory material and by adding approved material, reshaping to line and grade, and recompacting to specified density requirements. For cohesionless underlying courses containing sands or gravels, as defined in ASTM D 2487, the surface shall be stabilized prior to placement of the GCA. Stabilization shall be accomplished by mixing GCA into the underlying course and compacting by approved methods. The stabilized material shall be considered as part of the underlying course and shall meet all requirements of the underlying course. The finished underlying course shall not be disturbed by traffic or other operations and shall be maintained by the Contractor in a satisfactory condition until the GCA is placed.

3.5 INSTALLATION

3.5.1 Mixing the Materials

The coarse and fine aggregates shall be mixed in a stationary plant, or in a traveling plant or bucket loader on an approved paved working area. The Contractor shall make adjustments in mixing procedures or in equipment as directed to obtain true grades, to minimize segregation or degradation, to obtain the required water content, and to insure a satisfactory GCA meeting all requirements of this specification.

3.5.2 Placing

The mixed material shall be placed on the prepared subgrade or subbase in layers of uniform thickness with an approved spreader. When a compacted layer 6 inches or less in thickness is required, the material shall be placed in a single layer. When a compacted layer in excess of 6 inches is required, the material shall be placed in layers of equal thickness. No layer shall exceed 6 inches or less than 3 inches when compacted. The layers shall be so placed that when compacted they will be true to the grades or levels required with the least possible surface disturbance. Where the GCA is placed in more than one layer, the previously constructed layers shall be cleaned of loose and foreign matter by sweeping with power sweepers, power brooms, or hand brooms, as directed. Such adjustments in placing procedures or equipment shall be made as may be directed to obtain true grades, to minimize segregation and degradation, to adjust the water content, and to insure an acceptable GCA.

3.5.3 Grade Control

The finished and completed GCA shall conform to the lines, grades, and cross sections shown. Underlying material(s) shall be excavated and prepared at sufficient depth for the required GCA thickness so that the finished GCA with the subsequent surface course will meet the designated grades.

3.5.4 Edges of Base Course

The GCA shall be placed so that the completed section will be a minimum of 0.5 feet wider, on all sides, than the next layer that will be placed above it. Additionally, approved fill material shall be placed along the outer edges of GCA in sufficient quantities to compact to the thickness of the course being constructed, or to the thickness of each layer in a multiple layer course, allowing in each operation at least a 2 foot width of this material to be rolled and compacted simultaneously with rolling and compacting of each layer of GCA. If this base course material is to be placed adjacent to another pavement section, then the layers for both of these sections shall be placed and compacted along this edge at the same time.

3.5.5 Compaction

Each layer of the GCA shall be compacted as specified with approved compaction equipment. Water content shall be maintained at optimum water content determined from laboratory tests as specified in paragraph SAMPLING AND TESTING. Rolling shall begin at the outside edge of the surface and proceed to the center, overlapping on successive trips at least one-half the width of the roller. Alternate trips of the roller shall be slightly different lengths. Speed of the roller shall be such that displacement of the aggregate does not occur. In all places not accessible to the rollers, the mixture shall be compacted with hand-operated power tampers. Compaction shall continue until each layer has a degree of compaction that is at least 100 percent of laboratory maximum density through the full depth of the layer. The Contractor shall make such adjustments in compacting or finishing procedures as may be directed to obtain true grades, to minimize segregation and degradation, to reduce or increase water content, and to ensure a satisfactory GCA. Any materials that are found to be unsatisfactory shall be removed and replaced with satisfactory material or reworked, as directed, to meet the requirements of this specification.

3.5.6 Thickness

Compacted thickness of the aggregate course shall be as indicated. No individual layer shall exceed 6 inches nor be less than 3 inches in compacted thickness. The total compacted thickness of the GCA course shall be within 1/2 inch of the thickness indicated. Where the measured thickness is more than 1/2 inch deficient, such areas shall be corrected by scarifying, adding new material of proper gradation, reblading, and recompacting as directed. Where the measured thickness is more than 1/2 inch thicker than indicated, the course shall be considered as conforming to the specified thickness requirements. Average job thickness shall be the average of all thickness measurements taken for the job, but shall be within 1/4 inch of the thickness indicated. The total thickness of the GCA course shall be measured at intervals in such a manner as to ensure one measurement for each 1000 square yards of base course. Measurements shall be made in 3-inch diameter test holes penetrating the base course.

3.5.7 Proof Rolling

Proof rolling of the areas shall be in addition to the compaction specified and shall consist of the application of 30 coverages with a heavy pneumatic-tired roller having four or more tires, each loaded to a minimum of 30,000 pounds and inflated to a minimum of 150 psi. Proof rolling shall

be applied to the top of the underlying material on which GCA is laid and to each layer of GCA. Water content of the underlying material shall be maintained at optimum or at the percentage directed from start of compaction to completion of proof rolling of that layer. Water content of each layer of the GCA shall be maintained at the optimum percentage directed from start of compaction to completion of proof rolling. Any GCA materials or any underlying materials that produce unsatisfactory results by proof rolling shall be removed and replaced with satisfactory materials, recompacted and proof rolled to meet these specifications.

3.5.8 Finishing

The surface of the top layer of GCA shall be finished after final compaction and proof rolling by cutting any overbuild to grade and rolling with a steel-wheeled roller. Thin layers of material shall not be added to the top layer of base course to meet grade. If the elevation of the top layer of GCA is 1/2 inch or more below grade, then the top layer should be scarified to a depth of at least 3 inches and new material shall be blended in and compacted to bring to grade. Adjustments to rolling and finishing procedures shall be made as directed to minimize segregation and degradation, obtain grades, maintain moisture content, and insure an acceptable base course. Should the surface become rough, corrugated, uneven in texture, or traffic marked prior to completion, the unsatisfactory portion shall be scarified, reworked and recompacted or it shall be replaced as directed.

3.5.9 Smoothness

The surface of the top layer shall show no deviations in excess of 3/8 inch when tested with a 10-foot straightedge. Measurements shall be taken in successive positions parallel to the centerline of the area to be paved. Measurements shall also be taken perpendicular to the centerline at 50-foot intervals. Deviations exceeding this amount shall be corrected by removing material and replacing with new material, or by reworking existing material and compacting it to meet these specifications.

3.6 TRAFFIC

Completed portions of the GCA course may be opened to limited traffic, provided there is no marring or distorting of the surface by the traffic. Heavy equipment shall not be permitted except when necessary to construction, and then the area shall be protected against marring or damage to the completed work.

3.7 MAINTENANCE

The GCA shall be maintained in a satisfactory condition until the full pavement section is completed and accepted. Maintenance shall include immediate repairs to any defects and shall be repeated as often as necessary to keep the area intact. Any GCA that is not paved over prior to the onset of winter, shall be retested to verify that it still complies with the requirements of this specification. Any area of GCA that is damaged shall be reworked or replaced as necessary to comply with this specification.

3.8 DISPOSAL OF UNSATISFACTORY MATERIALS

Any unsuitable materials that must be removed shall be disposed of off base. No additional payments will be made for materials that must be replaced.

-- End of Section --

SECTION TABLE OF CONTENTS

DIVISION 02 - SITE WORK

SECTION 02748A

BITUMINOUS TACK AND PRIME COATS

01/98

PART 1 GENERAL

1.1 REFERENCES
1.2 SUBMITTALS
1.3 OMITTED
1.4 PLANT, EQUIPMENT, MACHINES AND TOOLS
1.4.1 General Requirements
1.4.2 Bituminous Distributor
1.4.3 Power Brooms and Power Blowers
1.5 WEATHER LIMITATIONS

PART 2 PRODUCTS

2.1 TACK COAT
2.2 PRIME COAT

PART 3 EXECUTION

3.1 PREPARATION OF SURFACE
3.2 APPLICATION RATE
3.2.1 Tack Coat
3.2.2 Prime Coat
3.3 APPLICATION TEMPERATURE
3.3.1 Viscosity Relationship
3.3.2 Temperature Ranges
3.4 APPLICATION
3.4.1 General
3.4.2 Prime Coat
3.4.3 Tack Coat
3.5 CURING PERIOD
3.6 OMITTED
3.7 SAMPLING AND TESTING
3.7.1 Sampling
3.7.2 Calibration Test
3.7.3 Trial Applications
3.7.3.1 Tack Coat Trial Application Rate
3.7.3.2 Prime Coat Trial Application Rate
3.7.4 Sampling and Testing During Construction

-- End of Section Table of Contents --

UFGS-02748A (January 1998)

SECTION 02748A

BITUMINOUS TACK AND PRIME COATS
01/98

PART 1 GENERAL

1.1 REFERENCES

The publications listed below form a part of this specification to the extent referenced. The publications are referred to in the text by basic designation only.

AMERICAN ASSOCIATION OF STATE HIGHWAY AND TRANSPORTATION OFFICIALS (AASHTO)

AASHTO M 81	(1992; R 1996) Cut-Back Asphalt (Rapid-Curing Type)
AASHTO T 40	(1978; R 1996) Sampling Bituminous Materials

AMERICAN SOCIETY FOR TESTING AND MATERIALS (ASTM)

ASTM D 140	(200) Sampling Bituminous Materials
ASTM D 2397	(1998) Cationic Emulsified Asphalt
ASTM D 2995	(1999) Determining Application Rate of Bituminous Distributors

1.2 SUBMITTALS

Government approval is required for submittals with a "G" designation; submittals not having a "G" designation are for information only. When used, a designation following the "G" designation identifies the office that will review the submittal for the Government. The following shall be submitted in accordance with Section 01330 SUBMITTAL PROCEDURES:

SD-03 Product Data

Waybills and Delivery Tickets

Waybills and delivery tickets, during progress of the work.

SD-06 Test Reports

Sampling and Testing

Copies of all test results for bituminous materials, within 24 hours of completion of tests. Certified copies of the manufacturer's test reports indicating compliance with applicable specified requirements, not less than 30 days before the material

is required in the work.

1.3 OMITTED

1.4 PLANT, EQUIPMENT, MACHINES AND TOOLS

1.4.1 General Requirements

Plant, equipment, machines and tools used in the work shall be subject to approval and shall be maintained in a satisfactory working condition at all times.

1.4.2 Bituminous Distributor

The distributor shall have pneumatic tires of such size and number to prevent rutting, shoving or otherwise damaging the base surface or other layers in the pavement structure. The distributor shall be designed and equipped to spray the bituminous material in a uniform coverage at the specified temperature, at readily determined and controlled rates with an allowable variation from the specified rate of not more than plus or minus 5 percent, and at variable widths. Distributor equipment shall include a separate power unit for the bitumen pump, full-circulation spray bars, tachometer, pressure gauges, volume-measuring devices, adequate heaters for heating of materials to the proper application temperature, a thermometer for reading the temperature of tank contents, and a hand hose attachment suitable for applying bituminous material manually to areas inaccessible to the distributor. The distributor shall be equipped to circulate and agitate the bituminous material during the heating process.

1.4.3 Power Brooms and Power Blowers

Power brooms and power blowers shall be suitable for cleaning the surfaces to which the bituminous coat is to be applied.

1.5 WEATHER LIMITATIONS

Bituminous coat shall be applied only when the surface to receive the bituminous coat is dry. Bituminous coat shall be applied only when the atmospheric temperature in the shade is 50 degrees F or above and when the temperature has not been below 35 degrees F for the 12 hours prior to application.

PART 2 PRODUCTS

2.1 TACK COAT

Emulsified asphalt shall conform to ASTM D 2397, Grade CSS-1 and CSS-1h.

2.2 PRIME COAT

ASTM D 2397 or AASHTO M 81, Grade CSS-1 and CSS-1h.

PART 3 EXECUTION

3.1 PREPARATION OF SURFACE

Immediately before applying the bituminous coat, all loose material, dirt, clay, or other objectionable material shall be removed from the surface to be treated. The surface shall be dry and clean at the time of treatment.

3.2 APPLICATION RATE

The exact quantities within the range specified, which may be varied to suit field conditions, will be determined by the Contracting Officer.

3.2.1 Tack Coat

Bituminous material for the tack coat shall be applied in quantities of not less than 0.05 gallon nor more than 0.15 gallon per square yard of pavement surface.

3.2.2 Prime Coat

Bituminous material for the prime coat shall be applied in quantities of not less than 0.15 gallon nor more than 0.40 gallon per square yard of pavement surface.

3.3 APPLICATION TEMPERATURE

3.3.1 Viscosity Relationship

Asphalt application temperature shall provide an application viscosity between 10 and 60 seconds, Saybolt Furol, or between 20 and 120 centistokes, kinematic. The temperature viscosity relation shall be furnished to the Contracting Officer.

3.3.2 Temperature Ranges

The viscosity requirements shall determine the application temperature to be used. The following is a normal range of application temperatures:

Liquid Asphalts

SC-70	120-225 degrees F
SC-250	165-270 degrees F
MC-30	85-190 degrees F
MC-70	120-225 degrees F
RC-70	120-200 degrees F*
RC-250	165-250 degrees F*

Paving Grade Asphalts

Penetration Grades

200-300	plus 265 degrees F
120-150	plus 270 degrees F
85-100	plus 280 degrees F

Viscosity Grades

AC 2.5	plus 270 degrees F
AC 5	plus 280 degrees F
AC 10	plus 280 degrees F

AR 1000	plus 275 degrees F
AR 2000	plus 285 degrees F
AR 4000	plus 290 degrees F

Emulsions

RS-1	70-140 degrees F
MS-1	70-160 degrees F
HFMS-1	70-160 degrees F
SS-1	70-160 degrees F
SS-1h	70-160 degrees F
CRS-1	125-185 degrees F
CSS-1	70-160 degrees F
CSS-1h	70-160 degrees F

*These temperature ranges exceed the flash point of the material and care should be taken in their heating.

3.4 APPLICATION

3.4.1 General

Following preparation and subsequent inspection of the surface, the bituminous coat shall be applied at the specified rate with uniform distribution over the surface to be treated. All areas and spots missed by the distributor shall be properly treated with the hand spray. Until the succeeding layer of pavement is placed, the surface shall be maintained by protecting the surface against damage and by repairing deficient areas at no additional cost to the Government. If required, clean dry sand shall be spread to effectively blot up any excess bituminous material. No smoking, fires, or flames other than those from the heaters that are a part of the equipment shall be permitted within 25 feet of heating, distributing, and transferring operations of bituminous material other than bituminous emulsions. All traffic, except for paving equipment used in constructing the surfacing, shall be prevented from using the underlying material, whether primed or not, until the surfacing is completed. The bituminous coat shall conform to all requirements as described herein.

3.4.2 Prime Coat

The prime coat will be required if it will be at least seven days before a the surfacing (Asphalt cement hot mix concrete)layer is constructed on the underlying (base course, etc)compacted material. The type of liquid asphalt and application rate will be as specified herein. The Contractor shall protect the underlying from any damage (water, traffic, etc.) until the surfacing is placed. If the Contractor places the surfacing within seven days, the choice of protection measures or actions to be taken is at the Contractor's option. Damage to the underlying material caused by lack of, or inadequate, protection shall be repaired (recompacted or replaced) by approved methods at no additional cost to the Government. If the Contractor options to use the prime coat, it shall be applied as soon as possible after consolidation of the underlying material. To obtain uniform application of the prime coat on the surface treated at the junction of previous and subsequent applications, building paper shall be spread on the surface for a sufficient distance back from the ends of each application to start and stop the prime coat on the paper. Immediately after application, the building paper shall be removed and destroyed.

3.4.3 Tack Coat

Tack coat shall be applied at the locations shown on the drawings.

3.5 CURING PERIOD

Following application of the bituminous material and prior to application of the succeeding layer of pavement, the bituminous coat shall be allowed to cure and to obtain evaporation of any volatiles or moisture. Prime coat shall be allowed to cure without being disturbed for a period of at least 48 hours or longer, as may be necessary to attain penetration into the treated course.

3.6 OMITTED

3.7 SAMPLING AND TESTING

Sampling and testing shall be performed by an approved commercial testing laboratory or by facilities furnished by the Contractor. No work requiring testing will be permitted until the facilities have been inspected and approved.

3.7.1 Sampling

The samples of bituminous material, unless otherwise specified, shall be in accordance with ASTM D 140 or AASHTO T 40. Sources from which bituminous materials are to be obtained shall be selected and notification furnished the Contracting Officer within 15 days after the award of the contract.

3.7.2 Calibration Test

The Contractor shall furnish all equipment, materials, and labor necessary to calibrate the bituminous distributor. Calibration shall be made with the approved job material and prior to applying the bituminous coat material to the prepared surface. Calibration of the bituminous distributor shall be in accordance with ASTM D 2995.

3.7.3 Trial Applications

Before providing the complete bituminous coat, three lengths of at least 100 feet for the full width of the distributor bar shall be applied to evaluate the amount of bituminous material that can be satisfactorily applied.

3.7.3.1 Tack Coat Trial Application Rate

Unless otherwise authorized, the trial application rate of bituminous tack coat materials shall be applied in the amount of 0.05 gallons per square yard. Other trial applications shall be made using various amounts of material as may be deemed necessary.

3.7.3.2 Prime Coat Trial Application Rate

Unless otherwise authorized, the trial application rate of bituminous materials shall be applied in the amount of 0.25 gallon per square yard. Other trial applications shall be made using various amounts of material as may be deemed necessary.

3.7.4 Sampling and Testing During Construction

Quality control sampling and testing shall be performed as required in paragraph FIELD QUALITY CONTROL.

-- End of Section --

SECTION TABLE OF CONTENTS

DIVISION 02 - SITE WORK

SECTION 02749

HOT-MIX ASPHALT (HMA) FOR AIRFIELDS

09/98

PART 1 GENERAL

1.1 REFERENCES
1.2 DESCRIPTION OF WORK
1.3 SUBMITTALS
1.4 OMITTED
1.5 OMITTED
1.6 ASPHALT MIXING PLANT
1.7 HAULING EQUIPMENT
1.8 ASPHALT PAVERS
1.8.1 Receiving Hopper
1.8.2 Automatic Grade Controls
1.9 ROLLERS
1.10 WEATHER LIMITATIONS

PART 2 PRODUCTS

2.1 AGGREGATES
2.1.1 Coarse Aggregate
2.1.2 Fine Aggregate
2.1.3 Mineral Filler
2.1.4 Aggregate Gradation
2.2 ASPHALT CEMENT BINDER
2.3 MIX DESIGN
2.3.1 JMF Requirements
2.3.2 Adjustments to JMF

PART 3 EXECUTION

3.1 PREPARATION OF ASPHALT BINDER MATERIAL
3.2 PREPARATION OF MINERAL AGGREGATE
3.3 PREPARATION OF HOT-MIX ASPHALT MIXTURE
3.4 PREPARATION OF THE UNDERLYING SURFACE
3.5 OMITTED
3.6 TESTING LABORATORY
3.7 TRANSPORTING AND PLACING
3.7.1 Transporting
3.7.2 Placing
3.8 COMPACTION OF MIXTURE
3.9 JOINTS
3.9.1 Transverse Joints
3.9.2 Longitudinal Joints
3.10 CONTRACTOR QUALITY CONTROL
3.10.1 General Quality Control Requirements
3.10.2 Testing Laboratory
3.10.3 Quality Control Testing
3.10.3.1 Asphalt Content
3.10.3.2 Gradation

3.10.3.3 Temperatures
3.10.3.4 Aggregate Moisture
3.10.3.5 Moisture Content of Mixture
3.10.3.6 Laboratory Air Voids, Marshall Stability and Flow
3.10.3.7 In-Place Density
3.10.3.8 Grade and Smoothness
3.10.3.9 Additional Testing
3.10.3.10 QC Monitoring
3.10.4 Sampling
3.10.5 Control Charts
3.11 MATERIAL ACCEPTANCE AND PERCENT PAYMENT
3.11.1 Percent Payment
3.11.2 Sublot Sampling
3.11.3 Additional Sampling and Testing
3.11.4 Laboratory Air Voids
3.11.5 Mean Absolute Deviation
3.11.6 In-place Density
3.11.6.1 General Density Requirements
3.11.6.2 Mat and Joint Densities
3.11.6.3 Pay Factor Based on In-place Density
3.11.7 Grade
3.11.8 Surface Smoothness
3.11.8.1 Smoothness Requirements
3.11.8.2 Testing Method
3.11.8.3 Payment Adjustment for Smoothness

-- End of Section Table of Contents --

CEGS-02749 (September 1998)

Includes changes through Notice 2 (September 1999)

SECTION 02749

HOT-MIX ASPHALT (HMA) FOR AIRFIELDS
09/98

PART 1 GENERAL

1.1 REFERENCES

The publications listed below form a part of this specification to the extent referenced. The publications are referred to in the text by basic designation only.

AMERICAN ASSOCIATION OF STATE HIGHWAY AND TRANSPORTATION OFFICIALS (AASHTO)

AASHTO MP1	(1997)Performance Graded Asphalt Binder
AASHTO TP53	(1995) Determining Asphalt Content of Hot Mix Asphalt by the Ignition Method

AMERICAN SOCIETY FOR TESTING AND MATERIALS (ASTM)

ASTM C 29/C 29M	(1997) Bulk Density (Unit Weight) and Voids in Aggregates
ASTM C 88	(1998) Soundness of Aggregates by Use of Sodium Sulfate or Magnesium Sulfate
ASTM C 117	(1995) Materials Finer than 75 micrometer (No. 200) Sieve in Mineral Aggregates by Washing
ASTM C 131	(1996) Resistance to Degradation of Small-Size Coarse Aggregate by Abrasion and Impact in the Los Angeles Machine
ASTM C 136	(1996a) Sieve Analysis of Fine and Coarse Aggregates
ASTM C 566	(1997) Total Evaporable Moisture Content of Aggregate by Drying
ASTM C 1252	(1998) Uncompacted Void Content of Fine Aggregate (as Influenced by Particle Shape, Surface Texture, and Grading)
ASTM D 140	(1993) Sampling Bituminous Materials
ASTM D 242	(1995) Mineral Filler for Bituminous Paving Mixtures
ASTM D 995	(1995b) Mixing Plants for Hot-Mixed,

	Hot-Laid Bituminous Paving Mixtures
ASTM D 1461	(1985) Moisture or Volatile Distillates in Bituminous Paving Mixtures
ASTM D 1559	(1989) Resistance to Plastic Flow of Bituminous Mixtures Using Marshall Apparatus
ASTM D 2041	(1995) Theoretical Maximum Specific Gravity and Density of Bituminous Paving Mixtures
ASTM D 2172	(1995) Quantitative Extraction of Bitumen from Bituminous Paving Mixtures
ASTM D 2419	(1995) Sand Equivalent Value of Soils and Fine Aggregate
ASTM D 2489	(1984; R 1994) Degree of Particle Coating of Bituminous-Aggregate Mixtures
ASTM D 2726	(1996a) Bulk Specific Gravity and Density of Non-Absorptive Compacted Bituminous Mixture
ASTM D 2950	(1997) Density of Bituminous Concrete in Place by Nuclear Method
ASTM D 3203	(1994) Percent Air Voids in Compacted Dense and Open Bituminous Paving Mixtures
ASTM D 3665	(1994) Random Sampling of Construction Materials
ASTM D 3666	(1996a) Minimum Requirements for Agencies Testing and Inspecting Bituminous Paving Materials
ASTM D 4125	(1994) Asphalt Content of Bituminous Mixtures by the Nuclear Method
ASTM D 4791	(1995) Flat Particles, Elongated Particles, or Flat and Elongated Particles in Coarse Aggregate
ASTM D 4867/D 4867M	(1996) Effect of Moisture on Asphalt Concrete Paving Mixtures
ASTM D 5444	(1994) Mechanical Size Analysis of Extracted Aggregate
ASTM D 6307	(1999) Asphalt Content of Hot Mix Asphalt by Ignition Method

ASPHALT INSTITUTE (AI)

AI MS-2	(1994) Mix Design Methods for Asphalt Concrete and Other Hot-Mix Types

CALIFORNIA DEPARTMENT OF TRANSPORTATION (CDT)

CDT Test 526	(1978) Operation of California Profilograph and Evaluation of Profiles

CORPS OF ENGINEERS (COE)

COE CRD-C 171	(1995) Test Method for Determining Percentage of Crushed Particles in Aggregate

1.2 DESCRIPTION OF WORK

The work shall consist of pavement courses composed of mineral aggregate and asphalt material heated and mixed in a central mixing plant and placed on a prepared course. HMA designed and constructed in accordance with this section shall conform to the lines, grades, thicknesses, and typical cross sections shown on the drawings. Each course shall be constructed to the depth, section, or elevation required by the drawings and shall be rolled, finished, and approved before the placement of the next course.

1.3 SUBMITTALS

Government approval is required for submittals with a "GA" designation; submittals having an "FIO" designation are for information only. The following shall be submitted in accordance with Section 01330 SUBMITTAL PROCEDURES:

SD-09 Reports

Aggregates; GA. QC Monitoring; FIO.

Aggregate and QC test results.

SD-13 Certificates

Asphalt Cement Binder; GA.

Copies of certified test data.

Testing Laboratory; FIO.

Certification of compliance.

SD-14 Samples

Asphalt Cement Binder; FIO.

5 gallon sample for mix design verification.

Aggregates; FIO.

Sufficient materials to produce 200 lb of blended mixture for mix design verification.

SD-18 Records

Mix Design; GA.

Proposed JMF.

Contractor Quality Control; GA.

Quality control plan.

1.4 OMITTED
1.5 OMITTED

1.6 ASPHALT MIXING PLANT

Plants used for the preparation of hot-mix asphalt shall conform to the requirements of ASTM D 995 with the following changes:

a. Truck Scales. The asphalt mixture shall be weighed on approved scales furnished by the Contractor, or on certified public scales at the Contractor's expense. Scales shall be inspected and sealed at least annually by an approved calibration laboratory.

b. Testing Facilities. The Contractor shall provide laboratory facilities at the plant for the use of the Government's acceptance testing and the Contractor's quality control testing.

c. Inspection of Plant. The Contracting Officer shall have access at all times, to all areas of the plant for checking adequacy of equipment; inspecting operation of the plant; verifying weights, proportions, and material properties; checking the temperatures maintained in the preparation of the mixtures and for taking samples. The Contractor shall provide assistance as requested, for the Government to procure any desired samples.

d. Storage Bins. The asphalt mixture may be stored in non-insulated storage bins for a period of time not exceeding 3 hours. The asphalt mixture may be stored in insulated storage bins for a period of time not exceeding 8 hours. The mix drawn from bins shall meet the same requirements as mix loaded directly into trucks.

1.7 HAULING EQUIPMENT

Trucks used for hauling hot-mix asphalt shall have tight, clean, and smooth metal beds. To prevent the mixture from adhering to them, the truck beds shall be lightly coated with a minimum amount of paraffin oil, lime solution, or other approved material. Petroleum based products shall not be used as a release agent. Each truck shall have a suitable cover to protect the mixture from adverse weather. When necessary to ensure that the mixture will be delivered to the site at the specified temperature, truck beds shall be insulated or heated and covers (tarps) shall be securely fastened.

1.8 ASPHALT PAVERS

Asphalt pavers shall be self-propelled, with an activated screed, heated as necessary, and shall be capable of spreading and finishing courses of hot-mix asphalt which will meet the specified thickness, smoothness, and grade. The paver shall have sufficient power to propel itself and the hauling equipment without adversely affecting the finished surface.

1.8.1 Receiving Hopper

The paver shall have a receiving hopper of sufficient capacity to permit a uniform spreading operation. The hopper shall be equipped with a distribution system to place the mixture uniformly in front of the screed without segregation. The screed shall effectively produce a finished surface of the required evenness and texture without tearing, shoving, or gouging the mixture.

1.8.2 Automatic Grade Controls

If an automatic grade control device is used, the paver shall be equipped with a control system capable of automatically maintaining the specified screed elevation. The control system shall be automatically actuated from either a reference line and/or through a system of mechanical sensors or sensor-directed mechanisms or devices which will maintain the paver screed at a predetermined transverse slope and at the proper elevation to obtain the required surface. The transverse slope controller shall be capable of maintaining the screed at the desired slope within plus or minus 0.1 percent. A transverse slope controller shall not be used to control grade. The controls shall be capable of working in conjunction with any of the following attachments:

a. Ski-type device of not less than 30 feet in length.

b. Taut stringline set to grade.

c. Short ski or shoe for joint matching.

d. Laser control.

1.9 ROLLERS

Rollers shall be in good condition and shall be operated at slow speeds to avoid displacement of the asphalt mixture. The number, type, and weight of rollers shall be sufficient to compact the mixture to the required density while it is still in a workable condition. Equipment which causes excessive crushing of the aggregate shall not be used.

1.10 WEATHER LIMITATIONS

The hot-mix asphalt shall not be placed upon a wet surface or when the surface temperature of the underlying course is less than specified in Table 1. The temperature requirements may be waived by the Contracting Officer, if requested; however, all other requirements, including compaction, shall be met.

Table 1. Surface Temperature Limitations of Underlying Course

Mat Thickness, inches	Degrees F
3 or greater	40
Less than 3	45

PART 2 PRODUCTS

2.1 AGGREGATES

Aggregates shall consist of crushed stone, crushed gravel, crushed slag, screenings, natural sand and mineral filler, as required. The portion of material retained on the No. 4 sieve is coarse aggregate. The portion of material passing the No. 4 sieve and retained on the No. 200 sieve is fine aggregate. The portion passing the No. 200 sieve is defined as mineral filler. All aggregate test results and samples shall be submitted to the Contracting Officer at least 14 days prior to start of construction.

2.1.1 Coarse Aggregate

Coarse aggregate shall consist of sound, tough, durable particles, free from films of material that would prevent thorough coating and bonding with the asphalt material and free from organic matter and other deleterious substances. The coarse aggregate particles shall meet the following requirements:

a. The percentage of loss shall not be greater than 40 percent after 500 revolutions when tested in accordance with ASTM C 131.

b. The percentage of loss shall not be greater than 18 percent after five cycles when tested in accordance with ASTM C 88 using magnesium sulfate.

c. At least 75 percent by weight of coarse aggregate shall have at least two or more fractured faces when tested in accordance with COE CRD-C 171. Fractured faces shall be produced by crushing.

d. The particle shape shall be essentially cubical and the aggregate shall not contain more than 20 percent, by weight, of flat and elongated particles (3:1 ratio of maximum to minimum) when tested in accordance with ASTM D 4791.

e. Slag shall be air-cooled, blast furnace slag, and shall have a compacted weight of not less than 75 lb/cu ft when tested in accordance with ASTM C 29/C 29M.

2.1.2 Fine Aggregate

Fine aggregate shall consist of clean, sound, tough, durable particles. The aggregate particles shall be free from coatings of clay, silt, or any objectionable material and shall contain no clay balls. The fine aggregate particles shall meet the following requirements:

a. The quantity of natural sand (noncrushed material) added to the aggregate blend shall not exceed 15 percent by weight of total aggregate.

b. The individual fine aggregate sources shall have a sand equivalent value greater than 45 when tested in accordance with ASTM D 2419.

c. The fine aggregate portion of the blended aggregate shall have an uncompacted void content greater than 45.0 percent when tested in accordance with ASTM C 1252 Method A.

2.1.3 Mineral Filler

Mineral filler shall be nonplastic material meeting the requirements of ASTM D 242.

2.1.4 Aggregate Gradation

The combined aggregate gradation shall conform to gradations specified in Table 2, when tested in accordance with ASTM C 136 and ASTM C 117, and shall not vary from the low limit on one sieve to the high limit on the adjacent sieve or vice versa, but grade uniformly from coarse to fine.

Table 2. Aggregate Gradations

Sieve Size, inch	Gradation 1 Percent Passing by Mass	Gradation 2 Percent Passing by Mass	Gradation 3 Percent Passing by Mass
1	100	---	---
3/4	76-96	100	---
1/2	68-88	76-96	100
3/8	60-82	69-89	76-96
No. 4	45-67	53-73	58-78
No. 8	32-54	38-60	40-60
No. 16	22-44	26-48	28-48
No. 30	15-35	18-38	18-38
No. 50	9-25	11-27	11-27
No. 100	6-18	6-18	6-18
No. 200	3-6	3-6	3-6

2.2 ASPHALT CEMENT BINDER

Asphalt cement binder shall conform to AASHTO MP1 Performance Grade (67-22). Test data indicating grade certification shall be provided by the supplier at the time of delivery of each load to the mix plant. Copies of these certifications shall be submitted to the Contracting Officer. The supplier is defined as the last source of any modification to the binder. The Contracting Officer may sample and test the binder at the mix plant at any time before or during mix production. Samples for this verification testing shall be obtained by the Contractor in accordance with ASTM D 140 and in the presence of the Contracting Officer. These samples shall be furnished to the Contracting Officer for the verification testing, which shall be at no cost to the Contractor. Samples of the asphalt cement specified shall be submitted for approval not less than 14 days before start of the test section.

2.3 MIX DESIGN

The Contractor shall develop the mix design. The asphalt mix shall be composed of a mixture of well-graded aggregate, mineral filler if required, and asphalt material. The aggregate fractions shall be sized, handled in separate size groups, and combined in such proportions that the resulting mixture meets the grading requirements of the job mix formula (JMF). No hot-mix asphalt for payment shall be produced until a JMF has been approved. The hot-mix asphalt shall be designed using procedures contained in AI MS-2 and the criteria shown in Table 3. If the Tensile Strength Ratio (TSR) of the composite mixture, as determined by ASTM D 4867/D 4867M is less than 75, the aggregates shall be rejected or the asphalt mixture treated with an approved anti-stripping agent. The amount of anti-stripping agent added shall be sufficient to produce a TSR of not less than 75. If an antistrip agent is required, it shall be provided by the Contractor at no additional cost. Sufficient materials to produce 200 pound of blended mixture shall be provided to the Contracting Officer for verification of mix design at least 14 days prior to construction of test

section.

2.3.1 JMF Requirements

The job mix formula shall be submitted in writing by the Contractor for approval at least 14 days prior to the start of the test section and shall include as a minimum:

a. Percent passing each sieve size.

b. Percent of asphalt cement.

c. Percent of each aggregate and mineral filler to be used.

d. Asphalt viscosity grade, penetration grade, or performance grade.

e. Number of blows of hammer per side of molded specimen.

f. Laboratory mixing temperature.

g. Lab compaction temperature.

h. Temperature-viscosity relationship of the asphalt cement.

i. Plot of the combined gradation on the 0.45 power gradation chart, stating the nominal maximum size.

j. Graphical plots of stability, flow, air voids, voids in the mineral aggregate, and unit weight versus asphalt content as shown in AI MS-2.

k. Specific gravity and absorption of each aggregate.

l. Percent natural sand.

m. Percent particles with two or more fractured faces (in coarse aggregate).

n. Fine aggregate angularity.

o. Percent flat or elongated particles (in coarse aggregate).

p. Tensile Strength Ratio.

q. Antistrip agent (if required) and amount.

r. List of all modifiers and amount.

s. Percentage and properties (asphalt content, binder properties, and aggregate properties) of RAP in accordance with paragraph RECYCLED HOT-MIX ASPHALT, if RAP is used.

Table 3. Marshall Design Criteria

Test Property	50 Blow Mix
Stability, pounds minimum	*1200

Table 3. Marshall Design Criteria

Test Property	50 Blow Mix
Flow, 0.01 inch	8-18
Air voids, percent	2-4
Percent Voids in mineral aggregate (minimum)	See Table 4
TSR, minimum percent	75

* This is a minimum requirement. The average during construction shall be significantly higher than this number to ensure compliance with the specifications.

** The 75 blow mix shall be used for the overrun asphalt pavement. The 50 blow mix can be used for other asphalt paved areas.

Table 4. Minimum Percent Voids in Mineral Aggregate (VMA)**

Aggregate (See Table 2)	Minimum VMA, percent
Gradation 1	13.0
Gradation 2	14.0
Gradation 3	15.0

** Calculate VMA in accordance with AI MS-2, based on ASTM D 2726 bulk specific gravity for the aggregate.

2.3.2 Adjustments to JMF

The JMF for each mixture shall be in effect until a new formula is approved in writing by the Contracting Officer. Should a change in sources of any materials be made, a new mix design shall be performed and a new JMF approved before the new material is used. The Contractor will be allowed to adjust the JMF within the limits specified below to optimize mix volumetric properties. Adjustments to the JMF shall be limited to plus or minus 3 percent on the 1/2 inch, No. 4, and No. 8 sieves; plus or minus 1.0 percent on the No. 200 sieve; and plus or minus 0.40 percent binder content. If adjustments are needed that exceed these limits, a new mix design shall be developed. Tolerances given above may permit the aggregate grading to be outside the limits shown in Table 2; this is acceptable.

PART 3 EXECUTION

3.1 PREPARATION OF ASPHALT BINDER MATERIAL

The asphalt cement material shall be heated avoiding local overheating and providing a continuous supply of the asphalt material to the mixer at a uniform temperature. The temperature of unmodified asphalts shall be no more than 325 degrees F when added to the aggregates. Modified asphalts shall be no more than 350 degrees F when added to the aggregates.

3.2 PREPARATION OF MINERAL AGGREGATE

The aggregate for the mixture shall be heated and dried prior to mixing. No damage shall occur to the aggregates due to the maximum temperature and rate of heating used. The temperature of the aggregate and mineral filler shall not exceed 350 degrees F when the asphalt cement is added. The temperature shall not be lower than is required to obtain complete coating and uniform distribution on the aggregate particles and to provide a mixture of satisfactory workability.

3.3 PREPARATION OF HOT-MIX ASPHALT MIXTURE

The aggregates and the asphalt cement shall be weighed or metered and introduced into the mixer in the amount specified by the JMF. The combined materials shall be mixed until the aggregate obtains a uniform coating of asphalt binder and is thoroughly distributed throughout the mixture. Wet mixing time shall be the shortest time that will produce a satisfactory mixture, but no less than 25 seconds for batch plants. The wet mixing time for all plants shall be established by the Contractor, based on the procedure for determining the percentage of coated particles described in ASTM D 2489, for each individual plant and for each type of aggregate used. The wet mixing time will be set to at least achieve 95 percent of coated particles. The moisture content of all hot-mix asphalt upon discharge from the plant shall not exceed 0.5 percent by total weight of mixture as measured by ASTM D 1461.

3.4 PREPARATION OF THE UNDERLYING SURFACE

Immediately before placing the hot mix asphalt, the underlying course shall be cleaned of dust and debris. A prime coat shall be applied in accordance with the contract specifications.

3.5 OMITTED

3.6 TESTING LABORATORY

The laboratory used to develop the JMF and for Government acceptance testing shall meet the requirements of ASTM D 3666. A certification signed by the manager of the laboratory stating that it meets these requirements or clearly listing all deficiencies shall be submitted to the Contracting Officer prior to the start of construction. The certification shall contain as a minimum:

a. Qualifications of personnel; laboratory manager, supervising technician, and testing technicians.

b. A listing of equipment to be used in developing the job mix.

c. A copy of the laboratory's quality control system.

d. Evidence of participation in the AASHTO Materials Reference Laboratory (AMRL) program.

3.7 TRANSPORTING AND PLACING

3.7.1 Transporting

The hot-mix asphalt shall be transported from the mixing plant to the site in clean, tight vehicles. Deliveries shall be scheduled so that placing

and compacting of mixture is uniform with minimum stopping and starting of the paver. Adequate artificial lighting shall be provided for night placements. Hauling over freshly placed material will not be permitted until the material has been compacted as specified, and allowed to cool to 140 degrees F. To deliver mix to the paver, the Contractor shall use a material transfer vehicle which shall be operated to produce continuous forward motion of the paver.

3.7.2 Placing

The mix shall be placed and compacted at a temperature suitable for obtaining density, surface smoothness, and other specified requirements. Upon arrival, the mixture shall be placed to the full width by an asphalt paver; it shall be struck off in a uniform layer of such depth that, when the work is completed, it shall have the required thickness and conform to the grade and contour indicated. The speed of the paver shall be regulated to eliminate pulling and tearing of the asphalt mat. Unless otherwise permitted, placement of the mixture shall begin along the centerline of a crowned section or on the high side of areas with a one-way slope. The mixture shall be placed in consecutive adjacent strips having a minimum width of 10 feet. The longitudinal joint in one course shall offset the longitudinal joint in the course immediately below by at least 1 foot; however, the joint in the surface course shall be at the centerline of the pavement. Transverse joints in one course shall be offset by at least 10 feet from transverse joints in the previous course. Transverse joints in adjacent lanes shall be offset a minimum of 10 feet. On isolated areas where irregularities or unavoidable obstacles make the use of mechanical spreading and finishing equipment impractical, the mixture may be spread and luted by hand tools.

3.8 COMPACTION OF MIXTURE

After placing, the mixture shall be thoroughly and uniformly compacted by rolling. The surface shall be compacted as soon as possible without causing displacement, cracking or shoving. The sequence of rolling operations and the type of rollers used shall be at the discretion of the Contractor, with the exception that the Contractor shall not apply more than three passes with a vibratory roller in the vibrating mode. The speed of the roller shall, at all times, be sufficiently slow to avoid displacement of the hot mixture and be effective in compaction. Any displacement occurring as a result of reversing the direction of the roller, or from any other cause, shall be corrected at once. Sufficient rollers shall be furnished to handle the output of the plant. Rolling shall continue until the surface is of uniform texture, true to grade and cross section, and the required field density is obtained. To prevent adhesion of the mixture to the roller, the wheels shall be kept properly moistened but excessive water will not be permitted. In areas not accessible to the roller, the mixture shall be thoroughly compacted with hand tampers. Any mixture that becomes loose and broken, mixed with dirt, contains check-cracking, or is in any way defective shall be removed full depth, replaced with fresh hot mixture and immediately compacted to conform to the surrounding area. This work shall be done at the Contractor's expense. Skin patching will not be allowed.

3.9 JOINTS

The formation of joints shall be made ensuring a continuous bond between the courses and to obtain the required density. All joints shall have the same texture as other sections of the course and meet the requirements for

smoothness and grade.

3.9.1 Transverse Joints

The roller shall not pass over the unprotected end of the freshly laid mixture, except when necessary to form a transverse joint. When necessary to form a transverse joint, it shall be made by means of placing a bulkhead or by tapering the course. The tapered edge shall be cut back to its full depth and width on a straight line to expose a vertical face prior to placing the adjacent lane. The cutback material shall be removed from the project. In both methods, all contact surfaces shall be given a light tack coat of asphalt material before placing any fresh mixture against the joint.

3.9.2 Longitudinal Joints

Longitudinal joints which are irregular, damaged, uncompacted, cold (less than 175 degrees F at the time of placing the adjacent lane), or otherwise defective, shall be cut back a minimum of 2 inches from the edge with a cutting wheel to expose a clean, sound vertical surface for the full depth of the course. All cutback material shall be removed from the project. All contact surfaces shall be given a light tack coat of asphalt material prior to placing any fresh mixture against the joint. The Contractor will be allowed to use an alternate method if it can be demonstrated that density, smoothness, and texture can be met.

3.10 CONTRACTOR QUALITY CONTROL

3.10.1 General Quality Control Requirements

The Contractor shall develop an approved Quality Control Plan. Hot-mix asphalt for payment shall not be produced until the quality control plan has been approved. The plan shall address all elements which affect the quality of the pavement including, but not limited to:

a. Mix Design

b. Aggregate Grading

c. Quality of Materials

d. Stockpile Management

e. Proportioning

f. Mixing and Transportation

g. Mixture Volumetrics

h. Moisture Content of Mixtures

i. Placing and Finishing

j. Joints

k. Compaction

l. Surface Smoothness

3.10.2 Testing Laboratory

The Contractor shall provide a fully equipped asphalt laboratory located at the plant or job site. The effective working area of the laboratory shall be a minimum of 150 square feet with a ceiling height of not less than 7.5 feet. Lighting shall be adequate to illuminate all working areas. It shall be equipped with heating and air conditioning units to maintain a temperature of 75 degrees F plus or minus 5 degrees F. Laboratory facilities shall be kept clean and all equipment shall be maintained in proper working condition. The Contracting Officer shall be permitted unrestricted access to inspect the Contractor's laboratory facility, to witness quality control activities, and to perform any check testing desired. The Contracting Officer will advise the Contractor in writing of any noted deficiencies concerning the laboratory facility, equipment, supplies, or testing personnel and procedures. When the deficiencies are serious enough to adversely affect test results, the incorporation of the materials into the work shall be suspended immediately and will not be permitted to resume until the deficiencies are corrected.

3.10.3 Quality Control Testing

The Contractor shall perform all quality control tests applicable to these specifications and as set forth in the Quality Control Program. The testing program shall include, but shall not be limited to, tests for the control of asphalt content, aggregate gradation, temperatures, aggregate moisture, moisture in the asphalt mixture, laboratory air voids, stability, flow, in-place density, grade and smoothness. A Quality Control Testing Plan shall be developed as part of the Quality Control Program.

3.10.3.1 Asphalt Content

A minimum of two tests to determine asphalt content will be performed per lot (a lot is defined in paragraph MATERIAL ACCEPTANCE AND PERCENT PAYMENT) by one of the following methods: extraction method in accordance with ASTM D 2172, Method A or B, the ignition method in accordance with the AASHTO TP53, ASTM D 6307, or the nuclear method in accordance with ASTM D 4125, provided the nuclear gauge is calibrated for the specific mix being used. For the extraction method, the weight of ash, as described in ASTM D 2172, shall be determined as part of the first extraction test performed at the beginning of plant production; and as part of every tenth extraction test performed thereafter, for the duration of plant production. The last weight of ash value obtained shall be used in the calculation of the asphalt content for the mixture.

3.10.3.2 Gradation

Aggregate gradations shall be determined a minimum of twice per lot from mechanical analysis of recovered aggregate in accordance with ASTM D 5444. When asphalt content is determined by the nuclear method, aggregate gradation shall be determined from hot bin samples on batch plants, or from the cold feed on drum mix plants. For batch plants, aggregates shall be tested in accordance with ASTM C 136 using actual batch weights to determine the combined aggregate gradation of the mixture.

3.10.3.3 Temperatures

Temperatures shall be checked at least four times per lot, at necessary locations, to determine the temperature at the dryer, the asphalt cement in the storage tank, the asphalt mixture at the plant, and the asphalt mixture at the job site.

3.10.3.4 Aggregate Moisture

The moisture content of aggregate used for production shall be determined a minimum of once per lot in accordance with ASTM C 566.

3.10.3.5 Moisture Content of Mixture

The moisture content of the mixture shall be determined at least once per lot in accordance with ASTM D 1461 or an approved alternate procedure.

3.10.3.6 Laboratory Air Voids, Marshall Stability and Flow

Mixture samples shall be taken at least four times per lot and compacted into specimens, using 50 blows per side with the Marshall hammer as described in ASTM D 1559. After compaction, the laboratory air voids of each specimen shall be determined, as well as the Marshall stability and flow.

3.10.3.7 In-Place Density

The Contractor shall conduct any necessary testing to ensure the specified density is achieved. A nuclear gauge may be used to monitor pavement density in accordance with ASTM D 2950.

3.10.3.8 Grade and Smoothness

The Contractor shall conduct the necessary checks to ensure the grade and smoothness requirements are met in accordance with paragraph MATERIAL ACCEPTANCE AND PERCENT PAYMENT.

3.10.3.9 Additional Testing

Any additional testing, which the Contractor deems necessary to control the process, may be performed at the Contractor's option.

3.10.3.10 QC Monitoring

The Contractor shall submit all QC test results to the Contracting Officer on a daily basis as the tests are performed. The Contracting Officer reserves the right to monitor any of the Contractor's quality control testing and to perform duplicate testing as a check to the Contractor's quality control testing.

3.10.4 Sampling

When directed by the Contracting Officer, the Contractor shall sample and test any material which appears inconsistent with similar material being produced, unless such material is voluntarily removed and replaced or deficiencies corrected by the Contractor. All sampling shall be in accordance with standard procedures specified.

3.10.5 Control Charts

For process control, the Contractor shall establish and maintain linear control charts on both individual samples and the running average of last four samples for the parameters listed in Table 6, as a minimum. These control charts shall be posted as directed by the Contracting Officer and shall be kept current at all times. The control charts shall identify the

project number, the test parameter being plotted, the individual sample numbers, the Action and Suspension Limits listed in Table 6 applicable to the test parameter being plotted, and the Contractor's test results. Target values from the JMF shall also be shown on the control charts as indicators of central tendency for the cumulative percent passing, asphalt content, and laboratory air voids parameters. When the test results exceed either applicable Action Limit, the Contractor shall take immediate steps to bring the process back in control. When the test results exceed either applicable Suspension Limit, the Contractor shall halt production until the problem is solved. The Contractor shall use the control charts as part of the process control system for identifying trends so that potential problems can be corrected before they occur. Decisions concerning mix modifications shall be made based on analysis of the results provided in the control charts. The Quality Control Plan shall indicate the appropriate action which shall be taken to bring the process into control when certain parameters exceed their Action Limits.

Table 6. Action and Suspension Limits for the Parameters to be Plotted on Individual and Running Average Control Charts

	Individual Samples		Running Average of Last Four Samples	
Parameter to be Plotted	Action Limit	Suspension Limit	Action Limit	Suspension Limit
No. 4 sieve, Cumulative % Passing, deviation from JMF target; plus or minus values	6	8	4	5
No. 30 sieve, Cumulative % Passing, deviation from JMF target; plus or minus values	4	6	3	4
No. 200 sieve, Cumulative % Passing, deviation from JMF target; plus or minus values	1.4	2.0	1.1	1.5
Stability, pounds (minimum)	1200	1100	1300	1200
Flow, 0.01 inch	8 min. 18 max.	7 min. 17 max.	9 min. 16 max.	8 min. 18 max.
Asphalt content, % deviation from JMF target; plus or minus value	0.4	0.5	0.2	0.3
Laboratory Air Voids, % deviation from JMF target value	No specific action and suspension limits set since this parameter is used to determine percent payment			
In-place Mat Density, % of Marshall density	No specific action and suspension limits set since this parameter is used to determine percent payment			
In-place Joint Density, % of Marshall density	No specific action and suspension limits set since this parameter is			

Table 6. Action and Suspension Limits for the Parameters to be Plotted on Individual and Running Average Control Charts

	Individual Samples		Running Average of Last Four Samples	
Parameter to be Plotted	Action Limit	Suspension Limit	Action Limit	Suspension Limit

used to determine percent payment

3.11 MATERIAL ACCEPTANCE AND PERCENT PAYMENT

The Government's quality assurance (QA) program for this project will be separate and distinct from the Contractor's quality control (QC) program. Testing for acceptability of work will be performed by the Contractor. Acceptance of the plant produced mix and in-place requirements will be on a lot to lot basis. A standard lot for all requirements will be equal to 2000 2000 pound tons. Where appropriate, adjustment in payment for individual lots of hot-mix asphalt will be made based on in-place density, laboratory air voids, grade and smoothness in accordance with the following paragraphs. Grade and surface smoothness determinations will be made on the lot as a whole. Exceptions or adjustments to this will be made in situations where the mix within one lot is placed as part of both the intermediate and surface courses, thus grade and smoothness measurements for the entire lot cannot be made. In order to evaluate laboratory air voids and in-place (field) density, each lot will be divided into four equal sublots.

3.11.1 Percent Payment

When a lot of material fails to meet the specification requirements for 100 percent pay as outlined in the following paragraphs, that lot shall be removed and replaced, or accepted at a reduced price which will be computed by dividing 2000 pound ton (one lot) by total project 2000 pound tons and multiplying the lump sum price for hot mix asphalt multiplied by the lot's pay factor. The lot pay factor is determined by taking the lowest computed pay factor based on either laboratory air voids, in-place density, grade or smoothness (each discussed below). Pay factors based on different criteria (i.e., laboratory air voids and in-place density) of the same lot will not be multiplied together to get a lower lot pay factor. At the end of the project, an average of all lot pay factors will be calculated. If this average lot pay factor exceeds 95.0 percent, then the percent payment for the entire project will be 100 percent of the lump sum bid price. If the average lot pay factor is less than 95.0 percent, then each lot will be paid for at the lump sum price multiplied by the lot's pay factor. For any lots which are less than pound tons, a weighted lot pay factor will be used to calculate the average lot pay factor.

3.11.2 Sublot Sampling

One random mixture sample for determining laboratory air voids, theoretical maximum density, and for any additional testing the Contracting Officer desires, will be taken from a loaded truck delivering mixture to each sublot, or other appropriate location for each sublot. All samples will be selected randomly, using commonly recognized methods of assuring randomness conforming to ASTM D 3665 and employing tables of random numbers or

computer programs. Laboratory air voids will be determined from three laboratory compacted specimens of each sublot sample in accordance with ASTM D 1559. The specimens will be compacted within 2 hours of the time the mixture was loaded into trucks at the asphalt plant. Samples will not be reheated prior to compaction and insulated containers will be used as necessary to maintain the temperature.

3.11.3 Additional Sampling and Testing

The Contracting Officer reserves the right to direct additional samples and tests for any area which appears to deviate from the specification requirements. Testing in these areas will be in addition to the lot testing, and the requirements for these areas will be the same as those for a lot.

3.11.4 Laboratory Air Voids

Laboratory air voids will be calculated in accordance with ASTM D 3203 by determining the Marshall density of each lab compacted specimen using ASTM D 2726 and determining the theoretical maximum density of every other sublot sample using ASTM D 2041. Laboratory air void calculations for each sublot will use the latest theoretical maximum density values obtained, either for that sublot or the previous sublot. The mean absolute deviation of the four laboratory air void contents (one from each sublot) from the JMF air void content will be evaluated and a pay factor determined from Table 7. All laboratory air void tests will be completed and reported within 24 hours after completion of construction of each lot.

3.11.5 Mean Absolute Deviation

An example of the computation of mean absolute deviation for laboratory air voids is as follows: Assume that the laboratory air voids are determined from four random samples of a lot (where three specimens were compacted from each sample). The average laboratory air voids for each sublot sample are determined to be 3.5, 3.0, 4.0, and 3.7. Assume that the target air voids from the JMF is 4.0. The mean absolute deviation is then:

Mean Absolute Deviation = (|3.5 - 4.0| + |3.0 - 4.0| + |4.0 - 4.0| + |3.7 - 4.0|)/4

= (0.5 + 1.0 + 0.0 + 0.3)/4 = (1.8)/4 = 0.45

The mean absolute deviation for laboratory air voids is determined to be 0.45. It can be seen from Table 7 that the lot's pay factor based on laboratory air voids, is 100 percent.

Table 7. Pay Factor Based on Laboratory Air Voids

Mean Absolute Deviation of Lab Air Voids from JMF	Pay Factor, %
0.60 or less	100
0.61 - 0.80	98
0.81 - 1.00	95
1.01 - 1.20	90
Above 1.20	reject (0)

3.11.6 In-place Density

3.11.6.1 General Density Requirements

For determining in-place density, one random core will be taken by the Contractor in the presence of the Contracting Officer from the mat (interior of the lane) of each sublot, and one random core will be taken from the joint (immediately over joint) of each sublot. Each random core will be full thickness of the layer being placed. When the random core is less than 1 inch thick, it will not be included in the analysis. In this case, another random core will be taken. After air drying to a constant weight, cores obtained from the mat and from the joints will be used for in-place density determination.

3.11.6.2 Mat and Joint Densities

The average in-place mat and joint densities are expressed as a percentage of the average Marshall density for the lot. The Marshall density for each lot will be determined as the average Marshall density of the four random samples (3 specimens compacted per sample). The average in-place mat density and joint density for a lot are determined and compared with Table 8 to calculate a single pay factor per lot based on in-place density, as described below. First, a pay factor for both mat density and joint density are determined from Table 8. The area associated with the joint is then determined and will be considered to be 10 feet wide times the length of completed longitudinal construction joint in the lot. This area will not exceed the total lot size. The length of joint to be considered will be that length where a new lane has been placed against an adjacent lane of hot-mix asphalt pavement, either an adjacent freshly paved lane or one paved at any time previously. The area associated with the joint is expressed as a percentage of the total lot area. A weighted pay factor for the joint is determined based on this percentage (see example below). The pay factor for mat density and the weighted pay factor for joint density is compared and the lowest selected. This selected pay factor is the pay factor based on density for the lot. When the Marshall density on both sides of a longitudinal joint is different, the average of these two densities will be used as the Marshall density needed to calculate the percent joint density. All density results for a lot will be completed and reported within 24 hours after the construction of that lot.

Table 8. Pay Factor Based on In-place Density

Average Mat Density (4 Cores)	Pay Factor, %	Average Joint Density (4 Cores)
98.0 - 100	100.0	Above 96.5
97.9	100.0	96.4
97.8 or 100.1	99.9	96.3
97.7	99.8	96.2
97.6 or 100.2	99.6	96.1
97.5	99.4	96.0
97.4 or 100.3	99.1	95.9
97.3	98.7	95.8
97.2 or 100.4	98.3	95.7
97.1	97.8	95.6
97.0 or 100.5	97.3	95.5
96.9	96.3	95.4
96.8 or 100.6	94.1	95.3
96.7	92.2	95.2

Table 8. Pay Factor Based on In-place Density

Average Mat Density (4 Cores)	Pay Factor, %	Average Joint Density (4 Cores)
96.6 or 100.7	90.3	95.1
96.5	87.9	95.0
96.4 or 100.8	85.7	94.9
96.3	83.3	94.8
96.2 or 100.9	80.6	94.7
96.1	78.0	94.6
96.0 or 101.0	75.0	94.5
below 96.0, above 101.0	0.0 (reject)	below 94.5

3.11.6.3 Pay Factor Based on In-place Density

An example of the computation of a pay factor (in I-P units only) based on in-place density, is as follows: Assume the following test results for field density made on the lot: (1) Average mat density = 97.2 percent (of lab density). (2) Average joint density = 95.5 percent (of lab density). (3) Total area of lot = 30,000 square feet. (4) Length of completed longitudinal construction joint = 2000 feet.

a. Step 1: Determine pay factor based on mat density and on joint density, using Table 8:

Mat density of 97.2 percent = 98.3 pay factor.

Joint density of 95.5 percent = 97.3 pay factor.

b. Step 2: Determine ratio of joint area (length of longitudinal joint x 10 ft) to mat area (total paved area in the lot): Multiply the length of completed longitudinal construction joint by the specified 10 ft. width and divide by the mat area (total paved area in the lot).

(2000 ft. x 10 ft.)/30000 sq.ft. = 0.6667 ratio of joint area to mat area (ratio).

c. Step 3: Weighted pay factor (wpf) for joint is determined as indicated below:

wpf = joint pay factor + (100 - joint pay factor) (1 - ratio) wpf = 97.3 + (100-97.3) (1-.6667) = 98.2%

d. Step 4: Compare weighted pay factor for joint density to pay factor for mat density and select the smaller:

Pay factor for mat density: 98.3%. Weighted pay factor for joint density: 98.2%

Select the smaller of the two values as pay factor based on density: 98.2%

3.11.7 Grade

The final wearing surface of pavement shall conform to the elevations and cross sections shown and shall vary not more than 0.03 foot for runways or

0.05 foot for taxiways and aprons from the plan grade established and approved at site of work. Finished surfaces at juncture with other pavements shall coincide with finished surfaces of abutting pavements. Deviation from the plan elevation will not be permitted in areas of pavements where closer conformance with planned elevation is required for the proper functioning of drainage and other appurtenant structures involved. The final wearing surface of the pavement will be tested for conformance with specified plan grade requirements. The grade will be determined by running lines of levels at intervals of 25 feet, or less, longitudinally and transversely, to determine the elevation of the completed pavement surface. Within 5 working days, after the completion of a particular lot incorporating the final wearing surface, the Contracting Officer will inform the Contractor in writing, of the results of the grade-conformance tests. When more than 5 percent of all measurements made within a lot are outside the 0.03 or 0.05 foot tolerance, the pay factor based on grade for that lot will be 95 percent. In areas where the grade exceeds the tolerance by more than 50 percent, the Contractor shall remove the surface lift full depth; the Contractor shall then replace the lift with hot-mix asphalt to meet specification requirements, at no additional cost to the Government. Diamond grinding may be used to remove high spots to meet grade requirements. Skin patching for correcting low areas or planing or milling for correcting high areas will not be permitted.

3.11.8 Surface Smoothness

The Contractor shall use one of the following methods to test and evaluate surface smoothness of the pavement. All testing shall be performed in the presence of the Contracting Officer. Detailed notes of the results of the testing shall be kept and a copy furnished to the Government immediately after each day's testing. The profilograph method shall be used for all longitudinal and transverse testing, except where the runs would be less than 200 feet in length and the ends where the straightedge shall be used. Where drawings show required deviations from a plane surface (crowns, drainage inlets, etc.), the surface shall be finished to meet the approval of the Contracting Officer.

3.11.8.1 Smoothness Requirements

a. Straightedge Testing: The finished surfaces of the pavements shall have no abrupt change of 1/8 inch or more, and all pavements shall be within the tolerances specified in Table 9 when checked with an approved 12-foot straightedge.

Table 9. Straightedge Surface Smoothness--Pavements

Pavement Category	Direction of Testing	Tolerance, inches
Runways and taxiways	Longitudinal	1/8
	Transverse	1/4

b. Profilograph Testing: The finished surfaces of the pavements shall have no abrupt change of 1/8 inch or more, and all pavement shall have a Profile Index not greater than specified in Table 10 when tested with an approved California-type profilograph. If the extent of the pavement in either direction is less than 200 feet, that direction shall be tested by the straightedge method and shall meet requirements specified above.

Table 10. Profilograph Surface Smoothness--Pavements

Pavement Category	Direction of Testing	Maximum Specified Profile Index (inch/mile)
Runways	Longitudinal	7
	Transverse	9
Taxiways	Longitudinal	9
	Transverse	(Use Straightedge)
Calibration Hardstands & Compass Swinging Bases		(Use Straightedge)
All Other Airfield & Helicopter Paved Areas	Longitudinal	9
	Transverse	9

3.11.8.2 Testing Method

After the final rolling, but not later than 24 hours after placement, the surface of the pavement in each entire lot shall be tested by the Contractor in such a manner as to reveal all surface irregularities exceeding the tolerances specified above. Separate testing of individual sublots is not required. If any pavement areas are ground, these areas shall be retested immediately after grinding. The entire area of the pavement shall be tested in both a longitudinal and a transverse direction on parallel lines. The transverse lines shall be 15 feet or less apart, as directed. The longitudinal lines shall be at the centerline of each paving lane for lines less than 20 feet and at the third points for lanes 20 feet or greater. Other areas having obvious deviations shall also be tested. Longitudinal testing lines shall be continuous across all joints.

a. Straightedge Testing. The straightedge shall be held in contact with the surface and moved ahead one-half the length of the straightedge for each successive measurement. The amount of surface irregularity shall be determined by placing the freestanding (unleveled) straightedge on the pavement surface and allowing it to rest upon the two highest spots covered by its length, and measuring the maximum gap between the straightedge and the pavement surface in the area between these two high points.

b. Profilograph Testing. Profilograph testing shall be performed using approved equipment and procedures described in CDT Test 526. The equipment shall utilize electronic recording and automatic computerized reduction of data to indicate "must-grind" bumps and the Profile Index for the pavement. The "blanking band" shall be 0.2 inch wide and the "bump template" shall span 1 inch with an offset of 0.4 inch. The profilograph shall be operated by an approved, factory-trained operator on the alignments specified above. A copy of the reduced tapes shall be furnished the Government at the end of each day's testing.

3.11.8.3 Payment Adjustment for Smoothness

a. Straightedge Testing. Location and deviation from straightedge for all measurements shall be recorded. When between 5.0 and 10.0 percent of all measurements made within a lot exceed the tolerance specified in paragraph Smoothness Requirements above, after any reduction of high spots

or removal and replacement, the computed pay factor for that lot based on surface smoothness, will be 95 percent. When more than 10.0 percent of all measurements exceed the tolerance, the computed pay factor will be 90 percent. When between 15.0 and 20.0 percent of all measurements exceed the tolerance, the computed pay factor will be 75 percent. When 20.0 percent or more of the measurements exceed the tolerance, the lot shall be removed and replaced at no additional cost to the Government. Regardless of the above, any small individual area with surface deviation which exceeds the tolerance given above by more than 50 percent, shall be corrected by diamond grinding to meet the specification requirements above or shall be removed and replaced at no additional cost to the Government.

b. Profilograph Testing. Location and data from all profilograph measurements shall be recorded. When the Profile Index of a lot exceeds the tolerance specified in paragraph Smoothness Requirements above by 1.0 inch/mile, but less than 2.0 inches/mile, after any reduction of high spots or removal and replacement, the computed pay factor for that lot based on surface smoothness will be 95 percent. When the Profile Index exceeds the tolerance by 2.0 inches/mile, but less than 3.0 inches/mile, the computed pay factor will be 90 percent. When the Profile Index exceeds the tolerance by 3.0 inches/mile, but less than 4.0 inches/mile, the computed pay factor will be 75 percent. When the Profile Index exceeds the tolerance by 4.0 inches/mile or more, the lot shall be removed and replaced at no additional cost to the Government. Regardless of the above, any small individual area with surface deviation which exceeds the tolerance given above by more than 5.0 inches/mile or more, shall be corrected by grinding to meet the specification requirements above or shall be removed and replaced at no additional cost to the Government.

c. Bumps ("Must Grind" Areas). Any bumps ("must grind" areas) shown on the profilograph trace which exceed 0.4 inch in height shall be reduced by diamond grinding until they do not exceed 0.3 inch when retested. Such grinding shall be tapered in all directions to provide smooth transitions to areas not requiring grinding. The following will not be permitted: (1) skin patching for correcting low areas, (2) planing or milling for correcting high areas. At the Contractor's option, pavement areas, including ground areas, may be rechecked with the profilograph in order to record a lower Profile Index.

-- End of Section --

SECTION TABLE OF CONTENTS

DIVISION 02 - SITE WORK

SECTION 02753A

CONCRETE PAVEMENT FOR AIRFIELDS AND OTHER HEAVY-DUTY PAVEMENTS

01/02

PART 1 GENERAL

1.1 REFERENCES
1.2 SYSTEM DESCRIPTION
1.3 SUBMITTALS
1.4 OMITTED
1.5 ACCEPTABILITY OF WORK AND PAYMENT ADJUSTMENTS
1.5.1 Pavement Lots
1.5.2 Acceptance of Lots
1.5.3 Evaluation
1.5.4 Additional Sampling and Testing
1.5.5 Air Content Tests
1.5.6 Slump Tests
1.5.7 Surface Smoothness
1.5.7.1 Smoothness Requirements
1.5.7.2 Testing Method
1.5.7.3 Payment Adjustment for Smoothness
1.5.8 Edge Slump and Joint Face Deformation
1.5.8.1 Edge Slump
1.5.8.2 Joint Face Deformation
1.5.8.3 Determination of Edge Slump
1.5.8.4 Excessive Edge Slump
1.5.9 Plan Grade
1.5.9.1 Plan Grade Tolerances
1.5.9.2 Grade Conformance Tests
1.5.10 Flexural Strength
1.5.10.1 Sampling and Testing
1.5.10.2 Computations
1.5.11 Thickness
1.5.11.1 Drilling, Measuring, and Computations
1.5.11.2 Evaluation and Payment Adjustment for Thickness
1.5.12 Partial Lots
1.5.13 Areas Defective in Plan Grade or Smoothness
1.6 ACCEPTABILITY OF WORK
1.7 PRECONSTRUCTION TESTING OF MATERIALS
1.7.1 Aggregates
1.7.2 Chemical Admixtures
1.7.3 Curing Compound
1.7.4 Epoxy-Resin Material
1.7.5 Cements, Pozzolans, and GGBF Slag
1.8 TESTING BY CONTRACTOR DURING CONSTRUCTION
1.8.1 Contractor's Testing Requirements
1.8.2 Cementitious Materials
1.9 OMITTED
1.10 OMITTED
1.11 QUALIFICATIONS
1.12 TEST SECTION
1.13 DELIVERY, STORAGE, AND HANDLING OF MATERIALS

1.13.1 Bulk Cementitious Materials
1.13.1.1 Transportation
1.13.1.2 Storage Requirements
1.13.1.3 Separation of Materials
1.13.2 Aggregate Materials
1.13.2.1 Storage
1.13.2.2 Handling
1.13.3 Other Materials
1.14 EQUIPMENT
1.14.1 Batching and Mixing Plant
1.14.1.1 Location of Batching and Mixing Plant
1.14.1.2 Type and Capacity of Batching and Mixing Plant
1.14.1.3 Equipment Requirements
1.14.1.4 Scales
1.14.1.5 Batching Tolerances
1.14.1.6 Moisture Control
1.14.1.7 Recorders
1.14.2 Concrete Mixers
1.14.2.1 Stationary, Central Plant, Mixers
1.14.2.2 Truck Mixers
1.14.2.3 Mixing Time and Uniformity
1.14.3 Transporting Equipment
1.14.4 Transfer and Spreading Equipment
1.14.5 Paver-Finisher
1.14.5.1 Paver-Finisher with Fixed Forms
1.14.5.2 Slipform Paver-Finisher
1.14.5.3 Longitudinal Mechanical Float
1.14.5.4 Nonrotating Pipe Float
1.14.5.5 Other Types of Finishing Equipment
1.14.6 Curing Equipment
1.14.7 Texturing Equipment
1.14.7.1 Fabric Drag
1.14.8 Sawing Equipment
1.14.9 Straightedge
1.14.10 Profilograph

PART 2 PRODUCTS

2.1 CEMENTITIOUS MATERIALS
2.1.1 Portland Cement
2.1.2 Omitted
2.1.3 Omitted
2.1.4 Pozzolan (Fly Ash and Silica Fume)
2.1.4.1 Fly Ash
2.1.5 Ground Granulated Blast-Furnace (GGBF) Slag
2.2 AGGREGATES
2.2.1 Aggregate Sources
2.2.2 Coarse Aggregate
2.2.2.1 Material Composition
2.2.2.2 Quality
2.2.2.3 Particle Shape Characteristics
2.2.2.4 Size and Grading
2.2.2.5 Deleterious Materials - Airfield Pavements
2.2.2.6 Testing Sequence Deleterious Materials -- Airfields Only
2.2.2.7 Resistance to Freezing and Thawing
2.2.2.8 Resistance to Abrasion
2.2.3 Fine Aggregate
2.2.3.1 Composition
2.2.3.2 Particle Shape

2.2.3.3 Grading
2.2.3.4 Deleterious Material
2.2.3.5 Resistance to Freezing and Thawing
2.3 CHEMICAL ADMIXTURES
2.3.1 Air-Entraining Admixtures
2.3.2 Accelerator
2.3.3 Retarder
2.3.4 Water-Reducer
2.4 CURING MATERIALS
2.4.1 Membrane Forming Curing Compound
2.4.2 Burlap
2.5 WATER
2.6 JOINT MATERIALS
2.6.1 Expansion Joint Material
2.6.2 Slip Joint Material
2.7 REINFORCING
2.7.1 Reinforcing Bars and Bar Mats
2.7.2 Welded Wire Fabric
2.7.3 Deformed Wire Fabric
2.7.4 Steel Fiber Reinforcing
2.8 DOWELS AND TIE BARS
2.8.1 Dowels
2.8.2 Tie Bars
2.9 EPOXY RESIN
2.10 SPECIFIED CONCRETE STRENGTH AND OTHER PROPERTIES
2.10.1 Specified Flexural Strength
2.10.2 Concrete Temperature
2.10.3 Concrete Strength for Final Acceptance
2.11 MIXTURE PROPORTIONS BY CONTRACTOR
2.11.1 Composition
2.11.2 Concrete Proportioning Studies, Pavement Concrete
2.11.2.1 Water-Cement Ratio
2.11.2.2 Trial Mixture Studies
2.11.2.3 Mixture Proportioning for 90-day Flexural Strength
2.11.3 Contractor Quality Control for Average Flexural Strength
2.11.3.1 Average CQC Flexural Strength Required for Mixtures

PART 3 EXECUTION

3.1 PREPARATION FOR PAVING
3.2 CONDITIONING OF UNDERLYING MATERIAL
3.2.1 General Procedures
3.2.2 Traffic on Underlying Material
3.3 WEATHER LIMITATIONS
3.3.1 Placement and Protection During Inclement Weather
3.3.2 Paving in Hot Weather
3.3.3 Prevention of Plastic Shrinkage Cracking
3.3.4 Paving in Cold Weather
3.4 CONCRETE PRODUCTION
3.4.1 Batching and Mixing Concrete
3.4.2 Transporting and Transfer - Spreading Operations
3.5 PAVING
3.5.1 General Requirements
3.5.2 Consolidation
3.5.3 Operation
3.5.4 Required Results
3.5.5 Fixed Form Paving
3.5.5.1 Forms for Fixed-Form Paving
3.5.5.2 Form Removal

3.5.6 Slipform Paving
3.5.6.1 General
3.5.6.2 Guideline for Slipform Paving
3.5.6.3 Laser Controls
3.5.7 Placing Reinforcing Steel
3.5.8 Placing Dowels and Tie Bars
3.5.8.1 Contraction Joints
3.5.8.2 Construction Joints-Fixed Form Paving
3.5.8.3 Dowels Installed in Hardened Concrete
3.5.8.4 Expansion Joints
3.6 FINISHING
3.6.1 Longitudinal Floating
3.6.2 Other Types of Finishing Equipment
3.6.3 Machine Finishing With Fixed Forms
3.6.4 Machine Finishing With Slipform Pavers
3.6.5 Surface Correction and Testing
3.6.6 Hand Finishing
3.6.6.1 Equipment
3.6.6.2 Finishing and Floating
3.6.7 Texturing
3.6.7.1 Fabric Drag Surface Finish
3.6.8 Edging
3.6.9 Outlets in Pavement
3.7 CURING
3.7.1 Protection of Concrete
3.7.2 Membrane Curing
3.7.3 Moist Curing
3.7.4 Impervious Sheet Curing
3.8 JOINTS
3.8.1 General Requirements for Joints
3.8.2 Longitudinal Construction Joints
3.8.3 Transverse Construction Joints
3.8.4 Expansion Joints
3.8.5 Slip Joints
3.8.6 Contraction Joints
3.8.6.1 Sawed Joints
3.8.7 Thickened Edge Joints
3.8.8 Omitted
3.8.9 Sealing Joints
3.9 REPAIR, REMOVAL, REPLACEMENT OF SLABS
3.9.1 General Criteria
3.9.2 Slabs with Cracks Thru Interior Areas
3.9.2.1 Cracks That Do Not Extend Full Depth of Slab
3.9.2.2 Cracks That Extend Full Depth of Slab
3.9.3 Cracks close to and Parallel to Transverse Joints
3.9.3.1 Full Depth Cracks Present, Original Joint Not Opened
3.9.3.2 Full Depth Cracks, Original Joint Also Cracked
3.9.4 Removal and Replacement of Full Slabs
3.9.5 Removal and Replacement of Partial Slabs
3.9.6 Repairing Spalls Along Joints
3.10 EXISTING CONCRETE PAVEMENT REMOVAL AND REPAIR
3.10.1 Removal of Existing Pavement Slab
3.10.2 Edge Repair
3.10.2.1 Spall Repair
3.10.2.2 Underbreak Repair
3.10.2.3 Underlying Material
3.11 PAVEMENT PROTECTION
3.12 TESTING AND INSPECTION FOR CONTRACTOR QUALITY CONTROL
3.12.1 Testing and Inspection by Contractor

3.12.2 Testing and Inspection Requirements
3.12.2.1 Fine Aggregate
3.12.2.2 Coarse Aggregate
3.12.2.3 Quality of Aggregates
3.12.2.4 Scales, Batching and Recording
3.12.2.5 Batch-Plant Control
3.12.2.6 Concrete Mixture
3.12.2.7 Concrete Strength Testing for CQC
3.12.2.8 Inspection Before Placing
3.12.2.9 Paving
3.12.2.10 Vibrators
3.12.2.11 Curing Inspection
3.12.2.12 Cold-Weather Protection
3.12.2.13 Mixer Uniformity
3.12.2.14 Reports

-- End of Section Table of Contents --

UFGS-02753A (January 2002)

SECTION 02753A

CONCRETE PAVEMENT FOR AIRFIELDS AND OTHER HEAVY-DUTY PAVEMENTS
01/02

PART 1 GENERAL

1.1 REFERENCES

The publications listed below form a part of this specification to the extent referenced. The publications are referred to in the text by basic designation only.

ACI INTERNATIONAL (ACI)

ACI 211.1	(1991) Standard Practice for Selecting Proportions for Normal, Heavyweight, and Mass Concrete
ACI 214.3R	(1988; R 1997) Simplified Version of the Recommended Practice for Evaluation of Strength Test Results of Concrete
ACI 305R	(1999) Hot Weather Concreting

AMERICAN ASSOCIATION OF STATE HIGHWAY AND TRANSPORTATION OFFICIALS (AASHTO)

AASHTO M 182	(1991; R 1996) Burlap Cloth Made from Jute or Kenaf

AMERICAN SOCIETY FOR TESTING AND MATERIALS (ASTM)

ASTM A 184/A 184M	(2001) Fabricated Deformed Steel Bar Mats for Concrete Reinforcement
ASTM A 185	(1997) Steel Welded Wire Fabric, Plain, for Concrete Reinforcement
ASTM A 497	(1999) Steel Welded Wire Fabric, Deformed, for Concrete Reinforcement
ASTM A 53/A 53M	(2001) Pipe, Steel, Black and Hot-Dipped, Zinc-Coated, Welded and Seamless
ASTM A 615/A 615M	(2000) Deformed and Plain Billet-Steel Bars for Concrete Reinforcement
ASTM A 616/A 616M	(1996a) Rail-Steel Deformed and Plain Bars for Concrete Reinforcement
ASTM A 617/A 617M	(1996a) Axle-Steel Deformed and Plain Bars for Concrete Reinforcement
ASTM C 1064/C 1064M	(1999) Temperature of Freshly Mixed

	Portland Cement Concrete
ASTM C 1077	(1998) Laboratories Testing Concrete and Concrete Aggregates for Use in Construction and Criteria for Laboratory Evaluation
ASTM C 117	(1995) Materials Finer Than 75 micrometer (No. 200) Sieve in Mineral Aggregates by Washing
ASTM C 123	(1998) Lightweight Particles in Aggregate
ASTM C 1260	(1994) Potential Alkali Reactivity of Aggregates (Mortar-Bar Method)
ASTM C 131	(1996) Resistance to Degradation of Small-Size Coarse Aggregate by Abrasion and Impact in the Los Angeles Machine
ASTM C 136	(1996a) Sieve Analysis of Fine and Coarse Aggregates
ASTM C 142	(1978; R 1997) Clay Lumps and Friable Particles in Aggregates
ASTM C 143/C 143M	(2000) Slump of Hydraulic Cement Concrete
ASTM C 150	(1999a) Portland Cement
ASTM C 172	(1999) Sampling Freshly Mixed Concrete
ASTM C 174/C 174M	(1997) Measuring Thickness of Concrete Elements Using Drilled Concrete Cores
ASTM C 192/C 192M	(2000) Making and Curing Concrete Test Specimens in the Laboratory
ASTM C 231	(1997el) Air Content of Freshly Mixed Concrete by the Pressure Method
ASTM C 260	(2000) Air-Entraining Admixtures for Concrete
ASTM C 295	(1998) Petrographic Examination of Aggregates for Concrete
ASTM C 31/C 31M	(2000e1) Making and Curing Concrete Test Specimens in the Field
ASTM C 33	(1999ae1) Concrete Aggregates
ASTM C 39/C 39M	(2001) Compressive Strength of Cylindrical Concrete Specimens
ASTM C 470/C 470M	(1998) Molds for Forming Concrete Test Cylinders Vertically
ASTM C 494/C 494M	(1999ae1) Chemical Admixtures for Concrete

ASTM C 618	(2000) Coal Fly Ash and Raw or Calcined Natural Pozzolan for Use as a Mineral Admixture in Concrete
ASTM C 78	(1994) Flexural Strength of Concrete (Using Simple Beam With Third-Point Loading)
ASTM C 881	(1999) Epoxy-Resin-Base Bonding Systems for Concrete
ASTM C 94/C 94M	(2000e2) Ready-Mixed Concrete
ASTM C 989	(1999) Ground Granulated Blast-Furnace Slag for Use in Concrete and Mortars
ASTM D 1751	(1999) Preformed Expansion Joint Filler for Concrete Paving and Structural Construction (Nonextruding and Resilient Bituminous Types)
ASTM D 1752	(1984; R 1996el) Preformed Sponge Rubber and Cork Expansion Joint Fillers for Concrete Paving and Structural Construction
ASTM D 3665	(1999) Random Sampling of Construction Materials

NATIONAL INSTITUTE OF STANDARDS AND TECHNOLOGY (NIST)

NIST HB 44	(1997) NIST Handbook 44: Specifications, Tolerances, and other Technical Requirements for Weighing and Measuring Devices

NATIONAL READY-MIXED CONCRETE ASSOCIATION (NRMCA)

NRMCA CPMB 100	(1996) Concrete Plant Standards \n/c\X

STATE OF CALIFORNIA DEPARTMENT OF TRANSPORTATION (CDT)

CDT Test 526	(1978) Operation of California Profilograph and Evaluation of Profiles

U.S. ARMY CORPS OF ENGINEERS (USACE)

COE CRD-C 100	(1975) Method of Sampling Concrete Aggregate and Aggregate Sources, and Selection of Material for Testing
COE CRD-C 104	(1980) Method of Calculation of the Fineness Modulus of Aggregate
COE CRD-C 114	(1997) Test Method for Soundness of Aggregates by Freezing and Thawing of Concrete Specimens
COE CRD-C 119	(1991) Standard Test Method for Flat or

	Elongated Particles in Coarse Aggregate
COE CRD-C 130	(1989) Scratch Hardness of Coarse Aggregate Particles
COE CRD-C 143	(1962) Specifications for Meters for Automatic Indication of Moisture in Fine Aggregate
COE CRD-C 300	(1990) Specifications for Membrane-Forming Compounds for Curing Concrete
COE CRD-C 400	(1963) Requirements for Water for Use in Mixing or Curing Concrete
COE CRD-C 521	(1981) Standard Test Method for Frequency and Amplitude of Vibrators for Concrete
COE CRD-C 55	(1992) Test Method for Within-Batch Uniformity of Freshly Mixed Concrete

U.S. DEPARTMENT OF DEFENSE (DOD)

MIL-DTL-24441/20	(Rev. A) Paint, Epoxy-Polyamide, Green Primer, Formula 150, Type III

1.2 SYSTEM DESCRIPTION

This section is intended to stand alone for construction of concrete (rigid) pavement. However, where the construction covered herein interfaces with other sections, the construction at each interface shall conform to the requirements of both this section and the other section, including tolerances for both.

1.3 SUBMITTALS

Government approval is required for submittals with a "G" designation; submittals not having a "G" designation are for information only. When used, a designation following the "G" designation identifies the office that will review the submittal for the Government. The following shall be submitted in accordance with Section 01330 SUBMITTAL PROCEDURES:

SD-03 Product Data

Equipment

a. Details and data on the batching and mixing plant prior to plant assembly including manufacturer's literature showing that the equipment meets all requirements specified herein.

b. A description of the equipment proposed for transporting concrete mixture from the central mixing plant to the paving equipment at least 7 days prior to start of paving unless otherwise specified.

c. At the time the materials are furnished for the mixture proportioning study, a description of the equipment proposed for the placing of the concrete mixture, method of control, and manufacturer's literature on the paver and finisher, together with

the manufacturer's written instructions on adjustments and operating procedures necessary to assure a tight, smooth surface on the concrete pavement, free of tears and other surface imperfections, including excessive paste on the surface. The literature shall show that the equipment meets all details of these specifications.

Proposed Techniques; G

a. A description of the placing and protection methods proposed prior to construction of the test section, if concrete is to be placed in or exposed to hot or cold weather conditions.

b. A detailed plan of the proposed paving pattern showing all planned construction joints. No deviation from the jointing pattern shown on the drawings shall be made without written approval.

c. Data on the curing media and methods to be used.

Samples for Mixture Proportioning Studies; G

The results of the Contractor's mixture proportioning studies along with a statement giving the maximum nominal coarse aggregate size and the proportions of all ingredients that will be used in the manufacture of concrete at least 14 days prior to commencing concrete placing operations. Aggregate quantities shall be based on the mass in a saturated surface dry condition. The statement shall be accompanied by test results from an independent commercial testing laboratory, inspected by the Government, and approved in writing, showing that mixture proportioning studies have been made with materials proposed for the project and that the proportions selected will produce concrete of the qualities indicated. No substitutions shall be made in the materials used in the mixture proportions without additional tests to show that the quality of the concrete is satisfactory.

Delivery, Storage, and Handling of Materials

Copies of waybills or delivery tickets for cementitious material during the progress of the work. Before the final payment is allowed, waybills and certified delivery tickets shall be furnished for all cementitious material used in the construction.

SD-06 Test Reports

Sampling and Testing; G

Certified copies of laboratory test reports, including all test data, for cement, pozzolan, aggregate, admixtures, and curing compound proposed for use on this project. These tests shall be made by an approved commercial laboratory or by a laboratory maintained by the manufacturers of the materials. No material shall be used until notice of acceptance has been given. Materials may be subjected to check testing by the Government from samples obtained at the manufacturer, at transfer points, or at the project site.

1.4 OMITTED

1.5 ACCEPTABILITY OF WORK AND PAYMENT ADJUSTMENTS

Concrete samples shall be taken by the Contractor in the field to determine the slump, air content, and strength of the concrete. Test beams and test cylinders shall be made for determining conformance with the strength requirements of these specifications. Any pavement not meeting the requirement for 'specified strength' shall be removed and replaced at no additional cost to the Government. The air content shall be determined in accordance with ASTM C 231. Slump tests shall be made in accordance with ASTM C 143/C 143M. Test beams and cylinders shall be molded and cured in accordance with ASTM C 31/C 31Mand as specified below. Steel molds shall be used for molding the beams specimens. Molds for cylinder test specimens shall conform to ASTM C 470/C 470M. The Contractor shall furnish all materials, labor, and facilities required for molding, curing, testing, and protecting test specimens at the site and in the laboratory. Laboratory curing facilities for test specimens shall include furnishing and operating water tanks equipped with temperature-control devices that will automatically maintain the temperature of the water at 73 plus or minus 5 degrees F. The Contractor shall furnish and maintain at the site boxes or other facilities suitable for storing the specimens while in the mold at a temperature of 73 plus or minus 10 degrees F. Tests of the fresh concrete and of the hardened concrete specimens shall be made by and at the expense of the Contractor.

1.5.1 Pavement Lots

*1

Appropriate adjustment in payment for individual lots of concrete pavement will be made in accordance with the following paragraphs. No such adjustment in payment will be made for any material other than concrete. A lot will be that quantity of construction that will be evaluated for compliance with specification requirements. A lot will be equal to ~~3700~~3500 square yards production or one day's production, whichever is less. In order to evaluate thickness, each lot will be divided into four equal sublots. Grade and surface smoothness (and condition) determinations will be made on the lot as a whole. However, any pavement not meeting the required 'specified strength' shall be removed and replaced at no additional cost to the Government. Strength will be evaluated, but will not be considered for payment adjustment. Edge slump requirements will be applied to each individual slab into which the primary paving lanes are divided by transverse joints, and will not be considered for payment adjustment. Samples for determining aggregate grading for fine aggregate and each size of coarse aggregate shall be taken as the aggregate bins discharge into the weigh hoppers. Results of tests on aggregates shall be used to control aggregate production and concreting operations, as specified in paragraph TESTING AND INSPECTION FOR CONTRACTOR QUALITY CONTROL, but will not be used for payment adjustment. Samples for determining air content and slump and for fabricating strength specimens shall be taken in accordance with ASTM C 172 during or immediately following delivery of the concrete at the paving site and deposition of the concrete immediately in front of the paver or transfer spreader. Results of strength tests shall be used to control concreting operations, but will not be used for payment adjustment. Cores for thickness determination shall be drilled and evaluated as specified. Location of all samples shall be as directed and will be deliberately selected on a truly random basis, not haphazard, using commonly recognized methods of assuring randomness, employing randomizing tables or computer programs, in accordance with ASTM D 3665.

1.5.2 Acceptance of Lots

When a lot of material fails to meet the specification requirements, that lot will be accepted at a reduced price or shall be removed and replaced. The lowest computed percent payment determined for any pavement characteristic (i.e., thickness, grade, and surface smoothness) discussed below shall be the actual percent payment for that lot. The actual percent payment will be applied to the square yards of concrete in the lot divided by total square yards of concrete in the project times the lump sum bid price.

Percent payment ((square yards in lot/square yards in project)(lump sum bid price for concrete pavement)).

1.5.3 Evaluation

The Contractor shall provide facilities for and, where directed, personnel to assist in obtaining samples for any Government testing, all at no additional cost to the Government. Such testing will in no way relieve the Contractor of any specified testing responsibilities. The Contractor shall provide all sampling and testing required for acceptance and payment adjustment at its expense. Such sampling and testing shall be performed by a testing laboratory inspected by the Government and approved in writing. The laboratory performing the tests shall be on-site and shall conform with ASTM C 1077. The individuals who sample and test concrete or the constituents of concrete as required in this specification shall be certified as American Concrete Institute (ACI) Concrete Field Testing Technicians, Grade I, or shall have otherwise demonstrated to the satisfaction of the Contracting Officer other training providing knowledge and ability equivalent to the ACI minimum requirements for certification. The individuals who perform the inspection of concrete shall be certified as ACI Concrete Construction Inspector, Level II, or have otherwise demonstrated to the satisfaction of the Contracting Officer other training providing knowledge and ability equivalent to the ACI minimum requirements for certification. The Government will inspect the laboratory, equipment, and test procedures prior to start of concreting operations and at least once per year thereafter for conformance with ASTM C 1077.

1.5.4 Additional Sampling and Testing

The Contracting Officer reserves the right to direct additional samples and tests for any area which appears to deviate from the specification requirements. Testing in these areas will be in addition to the sublot or lot testing, and the requirements for these areas will be the same as those for a sublot or lot, but shall be at no additional cost to the Government.

1.5.5 Air Content Tests

Air content of the concrete shall be controlled as specified in paragraph TESTING AND INSPECTION FOR CONTRACTOR QUALITY CONTROL and will not be considered for payment adjustment.

1.5.6 Slump Tests

Slump of the concrete shall be controlled as specified in paragraph TESTING AND INSPECTION FOR CONTRACTOR QUALITY CONTROL and will not be considered for payment adjustment.

1.5.7 Surface Smoothness

The Contractor shall use both of the following methods to test and evaluate surface smoothness of the pavement. All testing shall be performed in the presence of the Contracting Officer's representative. Detailed notes shall be kept of the results of the testing and a copy furnished to the Government immediately after each day's testing. The profilograph method shall be used for all longitudinal and transverse testing, except where the runs would be less than 200 feet in length and at the ends where the straightedge shall be used. Where drawings show required deviations from a plane surface (crowns, drainage inlets, etc.), the surface shall be finished to meet the approval of the Contracting Officer.

1.5.7.1 Smoothness Requirements

a. Straightedge Testing: The finished surfaces of the pavements shall have no abrupt change of 1/8 inch or more, and all pavements shall be within the limits specified in Table 1 when checked with an approved 12 foot straightedge.

TABLE 1
STRAIGHTEDGE SURFACE SMOOTHNESS--PAVEMENTS

Pavement Category	Direction of Testing	Limits Inches
Runways and Taxiways	Longitudinal	1/8
	Transverse	1/4
Calibration Hardstands & Compass Swinging Bases	Longitudinal	1/8
	Transverse	1/8
All Other Airfield and Helicopter Paved Areas	Longitudinal	1/4
	Transverse	1/4
Roads and Streets	Longitudinal	3/16
	Transverse	1/4
Tank Hardstands, Parking Areas, Open Storage Areas	Longitudinal	1/4
	Transverse	1/4

b. Profilograph Testing: The finished surfaces of the pavements shall have no abrupt change of 1/8 inch or more, and all pavement shall have a Profile Index not greater than specified in Table 2 when tested with an approved California-type profilograph. If the extent of the pavement in either direction is less than 200 feet, that direction shall be tested by the straightedge method and shall meet requirements specified for such.

TABLE 2
PROFILOGRAPH SURFACE SMOOTHNESS--PAVEMENTS

Pavement Category	Direction of Testing	Maximum Specified Profile Index Inch per mile
Taxiways	Longitudinal	9
	Transverse	(Use Straightedge)

TABLE 2
PROFILOGRAPH SURFACE SMOOTHNESS--PAVEMENTS

Pavement Category	Direction of Testing	Maximum Specified Profile Index Inch per mile

1.5.7.2 Testing Method

After the concrete has hardened sufficiently to permit walking thereon, but not later than 36 hours after placement, the surface of the pavement in each entire lot shall be tested by the Contractor in such a manner as to reveal all surface irregularities exceeding the tolerances specified above. However, transverse profilograph testing of multiple paving lanes shall be performed at the timing directed. Separate testing of individual sublots is not required. If any pavement areas are ground, these areas shall be retested immediately after grinding. The entire area of the pavement shall be tested in both a longitudinal and a transverse direction on parallel lines. The transverse lines shall be 15 feet or less apart, as directed. The longitudinal lines shall be at the centerline of each paving lane shown on the drawings, regardless of whether the Contractor is allowed to pave two lanes at a time, and at the 1/8th point in from each side of the lane. Other areas having obvious deviations shall also be tested. Longitudinal testing lines shall be continuous across all joints. Transverse testing lines for pilot lanes shall be carried to construction joint lines and for fill-in lanes shall be carried 24 inches across construction joints, and the readings in this area applied to the fill-in lane. Straightedge testing of the longitudinal edges of slipformed pilot lanes shall also be performed before paving fill-in lanes as specified in paragraph "Edge Slump and Joint Face Deformation".

a. Straightedge Testing: The straightedge shall be held in contact with the surface and moved ahead one-half the length of the straightedge for each successive measurement. The amount of surface irregularity shall be determined by placing the freestanding (unleveled) straightedge on the pavement surface and allowing it to rest upon the two highest spots covered by its length and measuring the maximum gap between the straightedge and the pavement surface, in the area between these two high points.

b. Profilograph Testing: Profilograph testing shall be performed using approved equipment and procedures described in CDT Test 526. The equipment shall utilize electronic recording and automatic computerized reduction of data to indicate "must-grind" bumps and the Profile Index for the pavement. The "blanking band" shall be 0.2 inches wide and the "bump template" shall span 1 inch with an offset of 0.4 inch. The profilograph shall be operated by an approved, factory-trained operator on the alignments specified above. A copy of the reduced tapes shall be furnished the Government at the end of each day's testing.

1.5.7.3 Payment Adjustment for Smoothness

a. Straightedge Testing: Location and deviation from straightedge for all measurements shall be recorded. When between 5.0 and 10.0 percent and less than 15.0 percent of all measurements made within a lot exceed the tolerance specified in paragraph "Smoothness

Requirements" above, after any reduction of high spots or removal and replacement, the computed percent payment based on surface smoothness will be 95 percent. When more than 10.0 percent and less than 15.0 percent of all measurements exceed the tolerance, the computed percent payment will be 90 percent. When between 15.0 and 20.0 percent of all measurements exceed the tolerance, the computed percent payment will be 75 percent. When 20.0 percent or more of the measurements exceed the tolerance, the lot shall be removed and replaced at no additional cost to the Government. Regardless of the above, any small individual area with surface deviation which exceeds the tolerance given above by more than 50 percent shall be corrected by grinding to meet the specification requirements above or shall be removed and replaced at no additional cost to the Government.

b. Profilograph Testing: Location and data from all profilograph measurements shall be recorded. When the Profile Index of a lot exceeds the tolerance specified in paragraph "Smoothness Requirements" above by 1.0 inch per mile but less than 2.0 inches per mile, after any reduction of high spots or removal and replacement, the computed percent payment based on surface smoothness will be 95 percent. When the Profile Index exceeds the tolerance by 2.0 inches per mile but less than 3.0 inches per mile, the computed percent payment will be 90 percent. When the Profile Index exceeds the tolerance by 3.0 inches per mile but less than 4.0 inches per mile, the computed percent payment will be 75 percent. When the Profile Index exceeds the tolerance by 4.0 inches per mile or more, the lot shall be removed and replaced at no additional cost to the Government. Regardless of the above, any small individual area with surface deviation which exceeds the tolerance given above by more than 5.0 inches per mile or more, shall be corrected by grinding to meet the specification requirements above or shall be removed and replaced at no additional cost to the Government.

c. Bumps ("Must Grind" Areas): Any bumps ("must grind" areas) shown on the profilograph trace which exceed 0.4 inch in height shall be reduced by grinding in accordance with subparagraph "Areas Defective In Plan Grade Or Smoothness" until they do not exceed 0.3 inch when retested. Such grinding shall be tapered in all directions to provide smooth transitions to areas not requiring grinding. Areas of textured pavement shall be retextured in accordance with the subparagraph listed above. At the Contractor's option, pavement areas including ground areas may be rechecked with the profilograph in order to record a lower Profile Index.

1.5.8 Edge Slump and Joint Face Deformation

The following requirements on testing and evaluation of edge slump and joint face deformation apply only to pavements 10 inches or more in thickness. Use of slip-form paving equipment and procedures that fail to consistently provide edges within the specified tolerances on edge slump and joint face deformation shall be discontinued and the pavements shall be constructed by means of standard paving procedures using fixed forms. Slabs having more than the allowable edge slump shall be removed and replaced as specified in subparagraph "Excessive Edge Slump" before the adjacent lane is placed. Edge slump and joint face deformation will not be applied to payment adjustment.

1.5.8.1 Edge Slump

When slip-form paving is used, not more than 15.0 percent of the total free edge of any slab of the pavement, as originally constructed, shall have an edge slump exceeding 1/4 inch, and no slab shall have an edge slump exceeding 3/8 inch as determined in accordance with the measurements as specified in paragraph "Determination of Edge Slump". (The total free edge of the pavement will be considered to be the cumulative total linear measurement of pavement edge originally constructed as non-adjacent to any existing pavement; i.e., 100 feet of pilot lane, a paving lane originally constructed as a separate lane, will have 200 feet of free edge; 100 feet of fill-in lane will have no free edge, etc.,). The area affected by the downward movement of the concrete along the pavement edge shall not exceed 18 inches back from the edge.

1.5.8.2 Joint Face Deformation

In addition to the edge slump limits specified above, the vertical joint face shall have a surface within the maximum limits shown below:

	Offset from Straightedge Applied Longitudinally To Pavement Surface 1 Inch Back From Joint Line	Offset From Straightedge Applied Longitudinally to Vertical Face	Offset From Straightedge Applied Top to Bottom Against the Joint Face	Abrupt Offset in Any Direction	Offset of Joint Face From True Vertical
Airfield Pavement	1/8 inch	1/4 inch	3/8 inch	1/8 inch	1 inch per 12 inches
All other Pavement	1/4 inch	All other items same as airfield pavement.			

1.5.8.3 Determination of Edge Slump

Immediately after the concrete has hardened sufficiently to permit walking thereon, the pavement surface shall be tested by the Contractor in the presence of a representative of the Contracting Officer. Testing shall be performed with a straightedge to reveal irregularities exceeding the edge slump tolerance specified above. The edge slump shall be determined at each free edge of each slipformed paving lane constructed. The straightedge shall be placed transverse to the direction of paving and the end of the straightedge located at the edge of the paving lane. Measurements shall be made at 5 to 15 foot spacings, as directed, commencing at the header where paving was started. Initially measurements shall be made at 5 foot intervals in each lane. When no deficiencies are present, the Contracting Officer may approve an increase in the interval. When any deficiencies exist, the interval will be returned to 5 feet. In no case shall the interval exceed 15 feet. In addition to the transverse edge slump determination above, the Contractor, at the same time, shall check the longitudinal surface smoothness of the joint on a continuous line 1 inch back from the joint line using the straightedge advanced one-half its length for each reading. Other tests of the exposed joint face shall be made as directed to ensure that a uniform, true vertical joint face is attained. These tests shall include longitudinal straightedge testing of

the vertical face and vertical testing of the face for both smoothness and angle. The measurements shall be made by the Contractor, shall be properly referenced in accordance with paving lane identification and stationing, and a report given to the Contracting Officer within 24 hours after measurement is made. The report shall also identify areas requiring replacement in accordance with paragraph "Excessive Edge Slump" as well as the cumulative percentage of total free edge of pavement constructed to date which has an edge slump exceeding 1/4 inch.

1.5.8.4 Excessive Edge Slump

When edge slump exceeding the limits specified above is encountered on either side of the paving lane, additional straightedge measurements shall be made, if required, to define the linear limits of the excessive slump. The concrete for the entire width of the paving lane within these limits of excessive edge slump or joint deformation shall be removed and replaced in conformance with paragraph REPAIR, REMOVAL, REPLACEMENT OR SLABS. Partial slabs removed and replaced shall extend across the full width of the pavement lane, parallel to the transverse joints, and both the section of the slab removed and the section remaining in place shall have a minimum length of 10 feet to the nearest scheduled transverse joint. If less than 10 feet remains, the entire slab shall be removed and replaced. Adding concrete or paste to the edge or otherwise manipulating the plastic concrete after the sliding form has passed, or patching the hardened concrete, shall not be used as a method for correcting excessive edge slump.

1.5.9 Plan Grade

1.5.9.1 Plan Grade Tolerances

The finished surfaces of pavements shall conform, within the tolerances shown below, to the lines, grades, and cross sections shown. The finished surfaces of airfield runway, taxiway, and apron pavements shall vary not more than 1/2 inch above or below the plan grade line or elevation indicated. The surfaces of other pavements shall vary not more than 3/4 inch. Plan grade shall be checked on the lot as a whole and when more than 5.0 and less than 10.0 percent of all measurements made within a lot are outside the specified tolerance, the computed percent payment for that lot will be 95 percent. When more than 10.0 percent are outside the specified tolerances, the computed percent payment for the lot will be 75 percent. However, in any areas where the deviation from grade exceeds the specified tolerances by 50 percent or more, the deficient area shall be removed and replaced at no additional cost to the Government. However, the above deviations from the approved grade line and elevation will not be permitted in areas where closer conformance with the planned grade and elevation is required for the proper functioning of appurtenant structures. The finished surfaces of new abutting pavements shall coincide at their juncture.

1.5.9.2 Grade Conformance Tests

Each pavement category shall be checked by the Contractor for conformance with plan grade requirements. For the purpose of making grade conformance tests, the pavements will be subdivided into the same lots used for all other payment adjustment items. Within 5 days after paving of each lot, the finished surface of the pavement area in each lot shall be tested by the Contractor, in the presence of a representative of the Contracting Officer, by running lines of levels at intervals corresponding with every longitudinal and transverse joint to determine the elevation at each joint

intersection. The results of this survey shall be recorded and a copy given to the Government at the completion of the survey of each lot.

1.5.10 Flexural Strength

Each lot of pavement will be evaluated for acceptance in accordance with the following procedures. The Contractor shall be responsible for all testing required herein. Testing shall be performed by an approved commercial laboratory. Results of strength tests will not be used for payment adjustment.

1.5.10.1 Sampling and Testing
*1
One composite sample of concrete from each sublot shall be obtained in accordance with ASTM C 172 from one batch or truckload. Test cylinders, 6 x 12 in. shall be fabricated and cured in accordance with ASTM C 31/C 31M; and tested in accordance with ASTM C 39/C 39M. Two test cylinders per sublot (~~8~~10 per lot) shall be fabricated and cured for compressive strength, and two tested at 7-day age, and two tested at 14-day age and two at 28-day age The remaining four shall be tested at the ages directed. At the same time 2 additional test cylinders per sublot to be used for CQC tests shall be fabricated and cured; and tested as specified in paragraph TESTING AND INSTECTION FOR CONTRACTOR QUALITY CONTROL. Two beams for flexural strength shall be fabricated and cured in accordance with ASTM C 31/C 31M and tested in accordance with ASTM C 78 for every 2500 cubic yards of concrete. These shall be tested at the ages directed.

1.5.10.2 Computations

The following computations shall be performed:

a. Average the eight 14-day compressive strength tests for the lot and also compute the standard deviation(s) for the eight tests.

b. Convert the 14-day average compressive strength for the lot to equivalent 90-day average flexural strength for the lot, using the Correlation Ratio determined during mixture design studies.

c. Report results of strength tests to the Contracting Officer daily. These values will be used for acceptance, but will not be used for payment adjustment.

1.5.11 Thickness

Each lot of pavement will be evaluated for acceptance and payment adjustment in accordance with the following procedure. The Contractor shall be responsible for drilling the cores, measuring the cores in the presence of the Contracting Officer's representative, and for filling the core holes as directed.

1.5.11.1 Drilling, Measuring, and Computations

One core, between 3 and 6 inches in diameter, shall be drilled from the pavement, per two sublots (2 per lot). The Contractor shall fill the core holes with concrete containing an expanding admixture, as directed. The cores shall be evaluated for thickness of the pavement in accordance with ASTM C 174/C 174M. The pavement thickness from the 2 cores for the lot shall be averaged and the standard deviation for the 2 thickness measurements shall be computed.

1.5.11.2 Evaluation and Payment Adjustment for Thickness

Using the Average Thickness of the lot, the computed percent payment for thickness shall be determined by entering the following table:

Pavements Over 8 inches In Thickness

Deficiency in Thickness Determined by Cores Inches	Computed Percent Payment for Thickness
0.00 to 0.49	100
0.50 to 0.74	75
0.75 to 0.99	50
1.00 or greater	0

Pavements 8 inches or Less In Thickness

Deficiency in Thickness Determined by Cores Inches	Computed Percent Payment for Thickness
0.00 to 0.49	100
0.50 to 0.74	65
0.75 or greater	0

Where 0 percent payment is indicated, the entire lot shall be removed and replaced at no additional cost to the Government. Where either of the two cores from a sublot show a thickness deficiency of 1.00 inch or greater, two more cores shall be drilled in the sublot and the average thickness of the four cores computed. If this average shows a thickness deficiency of 1.0 inch or more (0.75 inch for pavements 8 inches or less in thickness) the entire sublot shall be removed.

1.5.12 Partial Lots

When operational conditions cause a lot to be terminated before the specified four sublots have been completed, the following procedure shall be used to adjust the lot size and number of tests for the lot. Where three sublots have been completed, they shall constitute a lot and acceptance criteria adjusted accordingly. Where one or two sublots have been completed, they shall be incorporated into the next lot or the previous lot, as directed, and the total number of sublots shall be used and acceptance criteria adjusted accordingly.

1.5.13 Areas Defective in Plan Grade or Smoothness

In areas not meeting the specified limits for surface smoothness and plan grade, high areas shall be reduced to attain the required smoothness and grade, except as depth is limited below. High areas shall be reduced either by hand rubbing the freshly finished concrete with a silicon carbide brick and water when the concrete is less than 36 hours old or by grinding the hardened concrete with an approved surface grinding machine after the concrete is 14 days or more old. Rubbing with a silicon carbide brick and

water shall be discontinued as soon as contact with the coarse aggregate is made, and all further necessary reduction shall be accomplished by grinding the hardened concrete with a surface-grinding machine after it is 14 days old. The area corrected by grinding the surface of the hardened concrete shall not exceed 5 percent of the area of any integral slab, and shall not exceed 1 percent of the total area of any sublot. The depth of grinding shall not exceed 1/4 inch. All pavement areas requiring plan grade or surface smoothness corrections in excess of the limits specified above, shall be removed and replaced in conformance with paragraph REPAIR, REMOVAL, REPLACEMENT OF SLABS. In pavement areas given a wire comb or tined texture, areas exceeding 25 square feet that have been corrected by rubbing or grinding shall be retextured by transverse grooving using an approved grooving machine of standard manufacture. The grooves shall be 1/8 inch deep by 1/4 inch wide on 2 inch centers and shall be carried into, and tapered to zero depth within the non-corrected surface, or shall match any existing grooves in the adjacent pavement. All areas in which rubbing or grinding has been performed will be subject to the thickness tolerances specified in paragraph Thickness. Any rubbing or grinding performed on individual slabs with excessive deficiencies shall be performed at the Contractor's own decision without entitlement to additional compensation if eventual removal of the slab is required.

1.6 ACCEPTABILITY OF WORK

The materials and the pavement itself will be accepted on the basis of tests made by the Government and by the Contractor's approved commercial laboratory or the supplier's approved laboratory, all as specified herein. The Government may, at its discretion, make check tests to validate the results of the Contractor's testing. If the results of the Government and Contractor tests vary by less than 2.0 percent, of the Government's test results, the results of the Contractor's tests will be used. If the results of the Government and Contractor tests vary by 2.0 percent or more, but less than 4.0 percent, the average of the two will be considered the value to be used. If these vary by 4.0 percent or more, each sampling and testing procedure shall be carefully evaluated and both the Government and the Contractor shall take another series of tests on duplicate samples of material. If these vary by 4.0 percent or more, the results of the tests made by the Government shall be used and the Government will continue check testing of this item on a continuous basis until the two sets of tests agree within less than 4.0 percent on a regular basis. Testing performed by the Government will in no way at any time relieve the Contractor from the specified testing requirements.

1.7 PRECONSTRUCTION TESTING OF MATERIALS

The Contractor shall not be entitled to any additional payment or extension of time because of delays caused by sampling and testing additional sources, or samples, necessitated by failure of any samples.

1.7.1 Aggregates

Aggregates shall be sampled by the Contractor in the presence of a Government representative. Samples shall be obtained in accordance with COE CRD-C 100 and of the size indicated therein, or larger if specified in paragraph Testing Sequence Deleterious Materials -- Airfields Only and shall be representative of the materials to be used for the project. Testing of samples shall be the responsibility of the Contractor and shall be performed by an approved commercial laboratory. Test results shall be submitted 30 days before commencing paving. No material shall be used

unless test results show that it meets all requirements of these specifications.

1.7.2 Chemical Admixtures

The Contractor shall provide satisfactory facilities for ready procurement of adequate test samples. All sampling and testing of an admixture will be by and at the expense of the Government. Tests will be conducted with materials proposed for the project. An air-entraining admixture that has been in storage at the project site for longer than 6 months or that has been subjected to freezing will be retested at the expense of the Contractor when considered appropriate and shall be rejected if test results are not satisfactory.

1.7.3 Curing Compound

The Contractor shall provide satisfactory facilities for ready procurement of adequate test samples. The sampling and testing will be by and at the expense of the Government.

1.7.4 Epoxy-Resin Material

At least 30 days before the material is used, the Contractor shall submit certified copies of test results showing that the specific lots or batches from which the material will be furnished to this project have been tested by the manufacturer and that the material conforms to the requirements of these specifications. When epoxy resin arrives at the job site, the Contractor shall assist the Government to sample the material. The Government will test the sample or will retain it in storage for possible future testing, as considered appropriate.

1.7.5 Cements, Pozzolans, and GGBF Slag

Preconstruction sampling and testing of cement, pozzolan, and GGBF slag shall conform to the requirements specified for sampling and testing during construction except that test results showing that each material meets specification requirements shall be available at least 5 days before start of paving operations.

1.8 TESTING BY CONTRACTOR DURING CONSTRUCTION

1.8.1 Contractor's Testing Requirements

During construction, the Contractor shall be responsible for sampling and testing aggregates, cementitious materials (cement and pozzolan), and concrete to determine compliance with the specifications. All sampling and testing shall be performed by an approved commercial laboratory, or for cementitious materials, the manufacturer's laboratory. Samples of aggregate shall be obtained as the bins discharge into the the weigh hopper. Samples of concrete shall be obtained at the point of delivery to the paver. The Government will sample and test concrete and ingredient materials as considered appropriate. The Contractor shall provide facilities and labor as may be necessary for procurement of representative test samples. Testing by the Government will in no way relieve the Contractor of the specified testing requirements.

1.8.2 Cementitious Materials

Cement, ground granulated blast furnace (GGBF) slag, and pozzolan will be

accepted on the basis of manufacturer's certification of compliance, accompanied by mill test reports showing that the material in each shipment meets the requirements of the specification under which it is furnished. No cementitious material shall be used until notice of acceptance has been given by the Contracting Officer. Cementitious material may be subjected to check testing by the Government from samples obtained at the mill, at transfer points, or at the project site.

1.9 OMITTED

1.10 OMITTED

1.11 QUALIFICATIONS

All Contractor Quality Control personnel assigned to concrete construction shall be American Concrete Institute (ACI) Certified Workmen in one of the following grades (or shall have approved written evidence of having completed similar qualification programs):

Concrete Field Testing Technician, Grade I
Concrete Laboratory Testing Technician, Grade I or II
Concrete Construction Inspector, Level II

The foreman or lead journeyman of the finishing crew shall have similar qualification for ACI Concrete Flatwork Technician/Finisher, or equal. Written documentation shall be furnished for each workman in the above groups.

1.12 TEST SECTION

At least 10 days but not more than 60 days prior to construction of the concrete pavement, a test section shall be constructed as part of the production paving area at an outer edge as indicated on the drawings. If part of the production paving area, the test section will be allowed to remain in place, if meeting all specification requirements and will be paid for as part of the production pavement. There will be no separate payment for the test section or sections and the cost of the materials, and the construction will be considered a subsidiary cost of constructing the project. The Contractor shall notify the Contracting Officer at least 5 days in advance of the date of test section construction. The test section shall consist of one paving lane at least 400 feet long and shall be constructed to a thickness indicated on the drawings for the airfield pavement. The lane width shall be the same as that required for use in the project. The test section shall contain at least one transverse construction joint. If keyed or doweled longitudinal construction joints are required in any of the production pavements, they shall be installed full length along one side of the test strip throughout the test section. If both keys and dowels are required, each shall be installed in half of the test section. Two separate days shall be used for construction of the test section. The Contractor shall use the test section to develop and demonstrate to the satisfaction of the Contracting Officer the proposed techniques of mixing, hauling, placing, consolidating, finishing, curing, start-up procedures, testing methods, plant operations, and the preparation of the construction joints. Variations in mixture proportions other than water shall be made if directed. The test section shall be placed as approved by the Government. The Contractor shall vary the water content, as necessary, to arrive at the appropriate content. The mixing plant shall be operated and calibrated prior to start of placing the test section. The Contractor shall use the same equipment, materials, and construction techniques on the test section as will be used in all subsequent work.

Base course preparation, concrete production, placing, consolidating, curing, construction of joints, and all testing shall be in accordance with applicable provisions of this specification. The Contractor shall construct the test section meeting all specification requirements and being acceptable to the Contracting Officer in all aspects, including surface texture. Failure to construct an acceptable test section will necessitate construction of additional test sections at no additional cost to the Government. Test sections allowed to be constructed as part of the production paving which do not meet specification requirements shall be removed at the Contractor's expense. If the Contractor proposes to use slipform paving and is unable to construct an acceptable test section, or if the slipform paving equipment and procedures are found to be unable to produce acceptable pavement at any time, the slipform paving equipment shall be removed from the job and the construction completed using stationary side forms and equipment compatible with them. The Contractor shall provide four cores at least 6 inch diameter and 2 beams at least 6 by 32 inches by full depth (or 4 beams at least 6 by 20 inches by full depth) cut from points selected in the test section by the Government, 5 days after completion of the test section. The Contractor shall trim the beams to dimensions directed before delivery for inspection and testing, as considered appropriate. Production paving may be started immediately after the results of 7-day tests of the cores (and the sawed beams) have been approved and after approval of the test section.

1.13 DELIVERY, STORAGE, AND HANDLING OF MATERIALS

1.13.1 Bulk Cementitious Materials

All cementitious material shall be furnished in bulk. The temperature of the cementitious material, as delivered to storage at the site, shall not exceed 150 degrees F.

1.13.1.1 Transportation

When bulk cementitious material is not unloaded from primary carriers directly into weather-tight hoppers at the batching plant, transportation from the railhead, mill, or intermediate storage to the batching plant shall be accomplished in adequately designed weather-tight trucks, conveyors, or other means that will protect the cementitious material from exposure to moisture.

1.13.1.2 Storage Requirements

Immediately upon receipt at the site of the work, cementitious materials shall be stored in a dry and properly ventilated structure. All storage facilities shall be subject to approval and shall allow easy access for inspection and identification. Sufficient cementitious materials shall be in storage to sustain continuous operation of the concrete mixing plant while the pavement is being placed. To prevent cement from becoming unduly aged after delivery, any cement that has been stored at the site for 60 days or more shall be used before using cement of lesser age.

1.13.1.3 Separation of Materials

Separate facilities shall be provided which will prevent any intermixing during unloading, transporting, storing, and handling of each type of cementitious material.

1.13.2 Aggregate Materials

1.13.2.1 Storage

Aggregate shall be stored at the site of the batching and mixing plant avoiding breakage, segregation, or contamination by foreign materials. Each size of aggregate from each source shall be stored separately in free-draining stockpiles. Fine aggregate and the smallest size coarse aggregate shall remain in free-draining storage for at least 24 hours immediately prior to use. Sufficient aggregate shall be maintained at the site at all times to permit continuous uninterrupted operation of the mixing plant at the time concrete pavement is being placed.

1.13.2.2 Handling

Aggregate shall be handled avoiding segregation or degradation. Vehicles used for stockpiling or moving aggregate shall be kept clean of foreign materials. Tracked equipment shall not be allowed on coarse aggregate stockpiles. Stockpiles shall be built up and worked avoiding segregation in the piles and preventing different sizes of aggregate from being mixed during storage or batching. Aggregate shall not be stored directly on ground unless a sacrificial layer is left undisturbed and unused.

1.13.3 Other Materials

Reinforcing bars and accessories shall be stored above the ground on platforms, skids, or other supports. Other materials shall be stored avoiding contamination and deterioration. Chemical admixtures which have been in storage at the project site for longer than 6 months or which have been subjected to freezing shall not be used unless retested and proven to meet the specified requirements. The Contractor shall ensure that materials can be accurately identified after bundles or containers are opened.

1.14 EQUIPMENT

All plant, equipment, tools, and machines used in the work shall be maintained in satisfactory working conditions at all times.

1.14.1 Batching and Mixing Plant

1.14.1.1 Location of Batching and Mixing Plant
*1
The batching and mixing plant shall be located ~~off Government premises no more than 15 minutes haul time from the placing site~~as shown on Plate C-02. There shall be operable telephonic or radio communication between the batching plant and the placing site at all times concreting is taking place.

1.14.1.2 Type and Capacity of Batching and Mixing Plant

The batching and mixing plant shall be a stationary-type plant. The plant shall be designed and operated to produce concrete within the specified tolerances, and shall have a capacity of at least 250 cubic yards per hour. The batching plant shall conform to the requirements of NRMCA CPMB 100 and as specified; however, rating plates attached to batch plant equipment are not required.

1.14.1.3 Equipment Requirements

The batching controls shall be either semiautomatic or automatic.

Semiautomatic batching system shall be provided with interlocks. Separate bins or compartments shall be provided for each size group of aggregate and each cementitious material. Aggregates shall be weighed either in separate weigh batchers with individual scales or cumulatively in one weigh batcher on one scale, provided the fine aggregate is weighed first. Aggregate shall not be weighed in the same batcher with cementitious material. If both cement and pozzolan are used, they may be batched cumulatively, provided portland cement is batched first. Water shall not be weighed or measured cumulatively with another ingredient. Water batcher filling and discharging valves shall be so interlocked that the discharge valve cannot be opened before the filling valve is fully closed. An accurate mechanical device for measuring and dispensing each chemical admixture shall be provided. Each dispenser shall be interlocked with the batching cycle and discharged automatically to obtain uniform distribution throughout the batch in the specified mixing period. Different chemical admixtures shall not be combined before introduction in water and cement. The plant shall be arranged to facilitate the inspection of all operations at all times. Suitable facilities shall be provided for obtaining representative samples of aggregates from each bin or compartment.

1.14.1.4 Scales

Adequate facilities shall be provided for the accurate measurement and control of each of the materials entering each batch of concrete. The weighing equipment shall conform to the applicable requirements of NIST HB 44, except that the accuracy shall be within 0.2 percent of scale capacity. The Contractor shall provide standard test weights and any other auxiliary equipment required for checking the operating performance of each scale or other measuring device. Each weighing unit shall include a visible springless dial, which shall indicate the scale load at all stages of the weighing operation or shall include a beam scale with a beam balance indicator that will show the scale in balance at zero load and at any beam setting. The indicator shall have an over and under travel equal to at least 5 percent of the capacity of the beam. Approved electronic digital indicators and load cells may also be used. The weighing equipment shall be arranged to allow the concrete plant operator to conveniently observe the dials or indicators.

1.14.1.5 Batching Tolerances

The following tolerances shall apply.

Materials	Percentage of Required Mass
Cement (and Pozzolan)	plus or minus 1
Aggregate	plus or minus 2
Water	plus or minus 1
Admixture	plus or minus 3

For volumetric batching equipment for water and admixtures, the above numeric tolerances shall apply to the required volume of material being batched. Concentrated admixtures shall be uniformly diluted, if necessary, to provide sufficient volume per batch to ensure that the batchers will consistently operate within the above tolerance.

1.14.1.6 Moisture Control

The plant shall be capable of ready adjustment to compensate for the varying moisture contents of the aggregates and to change the quantities of the materials being batched. An electric moisture meter complying with the provisions of COE CRD-C 143 shall be provided for measuring of moisture in the fine aggregate. The sensing element shall be arranged so that measurement is made near the batcher charging gate of the fine aggregate bin or in the fine aggregate batcher.

1.14.1.7 Recorders

A graphic or digital recorder conforming to the requirements of NRMCA CPMB 100 shall be furnished and kept operational at the batching plant.

1.14.2 Concrete Mixers

Mixers shall be truck mixers. Mixers shall be capable of combining the materials into a uniform mixture and of discharging this mixture without segregation. The mixers shall not be charged in excess of the capacity recommended by the manufacturer. The mixers shall be operated at the drum or mixing blade speed designated by the manufacturer. The mixers shall be maintained in satisfactory operating condition, and the mixer drums shall be kept free of hardened concrete. Mixer blades or paddles shall be replaced when worn down more than 10 percent of their depth when compared with the manufacturer's dimension for new blades or paddles.

1.14.2.1 Stationary, Central Plant, Mixers

Mixers shall be provided with an acceptable device to lock the discharge mechanism until the required mixing time has elapsed.

1.14.2.2 Truck Mixers

The only truck mixers used for mixing or transporting paving concrete shall be those designed with extra large blading and rear opening specifically for low-slump paving concrete. Truck mixers, the mixing of concrete therein, and concrete uniformity and testing thereof shall conform to the requirements of ASTM C 94/C 94M. A truck mixer may be used either for complete mixing (transit-mixed) or to finish the partial mixing done in a stationary mixer (shrink-mixed). Each truck shall be equipped with two counters which will show the number of revolutions at mixing speed and the number of revolutions at agitating speed. Concrete completely mixed in a truck mixer shall be mixed 70 to 100 revolutions at the designated mixing speed after all ingredients, including mixing water, have been charged into the drum. Concrete first partially mixed in a concrete plant mixer (shrink-mixed) a minimum time, as required to combine the ingredients, shall then be completely mixed in a truck mixer. The number of revolutions between 70 to 100 for truck-mixed concrete and the number of revolutions for shrink-mixed concrete shall be determined by uniformity tests as specified in ASTM C 94/C 94M and in requirements for mixer performance stated in paragraph TESTING AND INSPECTION FOR CONTRACTOR QUALITY CONTROL. If requirements for the uniformity of concrete are not met with 100 revolutions of mixing after all ingredients including water are in the truck mixer drum, the mixer shall not be used until the condition is corrected. Additional revolutions beyond the number determined to produce the required uniformity shall be at the designated agitating speed. Water shall not be added after the initial introduction of mixing water except, when on arrival at the job site, the slump is less than specified and the water-cement ratio is less than that given as a maximum in the approved mixture. Additional water may be added to bring the slump within the

specified range provided the approved water-cement ratio is not exceeded. Water shall be injected into the head of the mixer (end opposite the discharge opening) drum under pressure, and the drum or blades shall be turned a minimum of 30 additional revolutions at mixing speed. Water shall not be added to the batch at any later time.

1.14.2.3 Mixing Time and Uniformity

a. Stationary Mixers: For stationary mixers, before uniformity data are available, the mixing time for each batch after all solid materials are in the mixer, provided that all of the mixing water is introduced before one-fourth of the mixing time has elapsed, shall be 1 minute for mixers having a capacity of 1 cubic yard. For mixers of greater capacity, this minimum time shall be increased 20 seconds for each additional 1.33 cubic yard or fraction thereof. After results of uniformity tests are available, the mixing time may be reduced to the minimum time required to meet uniformity requirements; but if uniformity requirements are not being met, the mixing time shall be increased as directed. Mixer performance tests at new mixing times shall be performed immediately after any change in mixing time. When regular testing is performed, the concrete shall meet the limits of any five of the six uniformity requirements listed in Table 4, below. When abbreviated testing is performed, the concrete shall meet only those requirements listed for abbreviated testing. The concrete proportions used for uniformity tests shall be as used on the project. Regular testing shall consist of performing all six tests on three batches of concrete. The range for regular testing shall be the average of the ranges of the three batches. Abbreviated testing shall consist of performing the three required tests on a single batch of concrete. The range for abbreviated testing shall be the range for one batch. If more than one mixer is used and all are identical in terms of make, type, capacity, condition, speed of rotation, etc., the results of tests on one of the mixers shall apply to the others, subject to the approval of the Contracting Officer. All mixer performance (uniformity) testing shall be performed by the Contractor in accordance with COE CRD-C 55 and with paragraph titled TESTING AND INSPECTION FOR CONTRACTOR QUALITY CONTROL.

TABLE 4
UNIFORMITY REQUIREMENTS--STATIONARY MIXERS

Parameter	Regular Tests Allowable Maximum Range for Average of 3 Batches	Abbreviated Tests Allowable Maximum Range for 1 Batch
Unit weight of air-free mortar, lb/cubic ft	2.0	2.0
Air content, percent	1.0	--
Slump, inches	1.0	--
Coarse aggregate, percent	6.0	6.0
Compressive strength at 7 days,	10.0	10.0

TABLE 4
UNIFORMITY REQUIREMENTS--STATIONARY MIXERS

Parameter	Regular Tests Allowable Maximum Range for Average of 3 Batches	Abbreviated Tests Allowable Maximum Range for 1 Batch
percent		
Water content, percent	1.5	--

b. Truck Mixers: Mixer performance (uniformity) tests for truck mixers shall be made by the Contractor in accordance with ASTM C 94/C 94M.

1.14.3 Transporting Equipment

Concrete shall be transported to the paving site in nonagitating equipment conforming to ASTM C 94/C 94M or in approved agitators. All transporting equipment shall be designed and operated to deliver and discharge the required concrete mixture completely without segregation.

1.14.4 Transfer and Spreading Equipment
*1
Equipment for transferring concrete from the transporting equipment to the paving lane in front of the paver shall be specially manufactured, self-propelled transfer equipment which will accept the concrete outside the paving lane and will transfer and spread it evenly across the paving lane in front of the paver and strike off the surface evenly to a depth which permits the paver to operate efficiently. Paver shall be equipped with a placer-spreader.

1.14.5 Paver-Finisher
*1
The paver-finisher shall be a heavy-duty, self-propelled machine designed specifically for paving and finishing high quality pavement. The paver-finisher shall weigh at least 2200 lb. per footof lane width, and shall be powered by an engine having at least 6.0 horsepower per foot of lane width. Other paver types may be submitted for review to the Contracting Officer and acceptance will be based on demonstration in a test section. The paver-finisher shall spread, consolidate, and shape the plastic concrete to the desired cross section in one pass. The mechanisms for forming the pavement shall be easily adjustable in width and thickness and for required crown. In addition to other spreaders required by paragraph Transfer and Spreading Equipment, the paver-finisher shall be equipped with a full width knock-down auger or paddle mechanism, capable of operating in both directions, which will evenly spread the fresh concrete in front of the screed or extrusion plate. Immersion vibrators shall be gang mounted at the front of the paver on a frame equipped with suitable controls so that all vibrators can be operated at any desired depth within the slab or completely withdrawn from the concrete, as required. The vibrators shall be automatically controlled so that they will be immediately stopped as forward motion of the paver ceases. The spacing of the immersion vibrators across the paving lane shall be as necessary to properly consolidate the concrete, but the clear distance between vibrators shall not exceed 30 inches. Spud vibrators shall operate at a frequency of not less than 8000 impulses per minute and an amplitude of not less than

0.03 inch and tube vibrators at a frequency of not less than 5000 impulses per minute and an amplitude of not less than 0.03 inch, as determined by COE CRD-C 521. The paver-finisher shall be equipped with a transversely oscillating screed or an extrusion plate to shape, compact, and smooth the surface and shall so finish the surface that no significant amount of hand finishing, except use of cutting straightedges, is required. The screed or extrusion plate shall be constructed to provide adjustment for crown in the pavement. The entire machine shall provide adjustment for variation in lane width or thickness and to prevent more than 8 inches of the screed or extrusion plate extending over previously placed concrete on either end when paving fill-in lanes. Machines that cause displacement of properly installed forms or cause ruts or indentations in the prepared underlying materials and machines that cause frequent delays due to mechanical failures shall be replaced as directed.

1.14.5.1 Paver-Finisher with Fixed Forms

The paver-finisher shall be equipped with wheels designed to keep it aligned with the forms and to spread the load so as to prevent deformation of the forms.

1.14.5.2 Slipform Paver-Finisher

The slipform paver-finisher shall be automatically controlled and crawler mounted with four padded tracks so as to be completely stable under all operating conditions. The paver-finisher shall finish the surface and edges so that no edge slump beyond allowable tolerance occurs. Horizontal alignment shall be electronically referenced to a taut wire guideline. Vertical alignment shall be electronically referenced on both sides of the paver to a taut wire guideline, to an approved laser control system, or, only where permitted by paragraph Slipform Paving, to a ski operating on a completed lane. Suitable moving side forms shall be provided that are adjustable and will produce smooth, even edges, perpendicular to the top surface and meeting specification requirements for alignment and freedom from edge slump.

1.14.5.3 Longitudinal Mechanical Float

A longitudinal mechanical float shall be specially designed and manufactured to smooth and finish the pavement surface without working excess paste to the surface. It shall be rigidly attached to the rear of the paver-finisher or to a separate self-propelled frame spanning the paving lane. The float plate shall be at least 5 feet long by 8 inches wide and shall automatically be oscillated in the longitudinal direction while slowly moving from edge to edge of the paving lane, with the float plate in contact with the surface at all times.

1.14.5.4 Nonrotating Pipe Float

A pipe float if used, shall be a nonrotating pipe 6 to 10 inches in diameter and sufficiently long to span the full paving width when oriented at an angle of approximately 60 degrees with the centerline. The pipe float shall be mounted on a self-propelled frame that spans the paving lane. No means of applying water to the surface shall be incorporated in the pipe float.

1.14.5.5 Other Types of Finishing Equipment
*1
Clary screeds or other rotating tube floats, or bridge deck finishers,

shall not be allowed on the project, except as noted below. Bridge deck finishers shall have a minimum operating weight of 9000 pounds and shall have a transversely operating carriage containing a knock-down auger and a minimum of two immersion vibrators. Concrete finishing equipment of types other than specified above may be demonstrated on a test section outside the production pavement if approved in writing. If the Contracting Officer's representative decides from evaluation of the test section that the equipment is better than the specified finishing equipment, its use will be permitted as long as it continues to perform better than the specified equipment.

1.14.6 Curing Equipment

Equipment for applying membrane-forming curing compound shall be mounted on a self-propelled frame that spans the paving lane. The reservoir for curing compound shall be constantly mechanically (not air) agitated during operation and shall contain means for completely draining the reservoir. The spraying system shall consist of a mechanically powered pump which will maintain constant pressure during operation, an operable pressure gauge, and either a series of spray nozzles evenly spaced across the lane to give uniformly overlapping coverage or a single spray nozzle which is mounted on a carriage which automatically traverses the lane width at a speed correlated with the forward movement of the overall frame. All spray nozzles shall be protected with wind screens. Any hand-operated sprayers allowed by paragraph Membrane Curing shall be compressed air supplied by a mechanical air compressor. If the curing machine fails to apply an even coating of compound at the specified rate, it shall immediately be replaced.

1.14.7 Texturing Equipment

Texturing equipment shall be as specified below. Before use, the texturing equipment shall be demonstrated on a test section, and the equipment shall be modified as necessary to produce the texture directed.

1.14.7.1 Fabric Drag

A fabric drag shall consist of a piece of material as long as the lane width securely attached to a separate wheel mounted frame spanning the paving lane or to one of the other similar pieces of equipment. Width of the material shall provide 12 to 18 inches dragging flat on the pavement surface. Length shall be at least equal to the width of the slab plus 24 inches. The material shall be clean, reasonably new burlap, completely saturated with water before attachment to the frame and always resaturated before start of use and kept clean and saturated during use. Burlap shall conform to AASHTO M 182, Class 3 or 4.

1.14.8 Sawing Equipment

Equipment for sawing joints and for other similar sawing of concrete shall be standard diamond-type concrete saws mounted on a wheeled chassis which can be easily guided to follow the required alignment. Blades shall be diamond tipped. If demonstrated to operate properly, abrasive blades may be used. All saws shall be capable of sawing to the full depth required.

1.14.9 Straightedge

The Contractor shall furnish and maintain at the job site, in good condition, one 12 foot straightedge for each paving train for testing the hardened portland cement concrete surfaces. These straightedges shall be

constructed of aluminum or magnesium alloy and shall have blades of box or box-girder cross section with flat bottom, adequately reinforced to insure rigidity and accuracy. Straightedges shall have handles for operation on the pavement.

1.14.10 Profilograph

The Contractor shall furnish a 25 foot profilograph for testing the finished pavement surface. The profilograph shall produce a record on tape of the results of testing the pavement surface and shall automatically mark the Profile Index of each section tested as well as indicate and measure each "must grind" point, all in accordance with CDT Test 526 and as required by paragraph Surface Smoothness.

PART 2 PRODUCTS

2.1 CEMENTITIOUS MATERIALS

Cementitious materials shall be portland cement, or portland-pozzolan cement, or portland blast-furnace slag cement, or only portland cement in combination with pozzolan or ground granulated blast furnace slag or silica fume and shall conform to appropriate specifications listed below. Temperature of cementitious materials as supplied to the project shall not exceed 150 degrees F.

2.1.1 Portland Cement

Portland cement shall conform to ASTM C 150, Type I or II, except that the maximum amount of C3A in Type I cement shall be 15 percent including false set requirements.

2.1.2 Omitted
2.1.3 Omitted

2.1.4 Pozzolan (Fly Ash and Silica Fume)

2.1.4.1 Fly Ash

Fly ash shall conform to ASTM C 618, Class C or F, including the optional requirements in Tables 1A and 2A. Class F fly ash, when used to mitigate alkali-aggregate reactivity, shall have a Calcium Oxide (CaO) content of less than 8 percent. The Contractor shall comply with EPA requirements in accordance with Section 01670 RECYCLED / RECOVERED MATERIALS.

2.1.5 Ground Granulated Blast-Furnace (GGBF) Slag

Ground granulated blast-furnace slag shall conform to ASTM C 989, Grade 120.

2.2 AGGREGATES

In addition to the grading requirements specified for coarse aggregate and for fine aggregate, the combined aggregate grading shall meet the following requirements.

a. If necessary, a blending aggregate shall be used to meet the required combined grading. This blending aggregate shall be batched separately. The combined grading of all aggregates used, in the proportions selected, shall be computed on the basis of cumulative percent retained on each sieve specified for fine and

coarse aggregate.

b. The materials selected and the proportions used shall be such that when the Coarseness Factor (CF) and the Workability Factor (W) are plotted on a diagram as described in d. below, the point thus determined shall fall within the parallelogram described therein.

c. The Coarseness Factor (CF) shall be determined from the following equation:

CF = (cumulative percent retained on the 3/8 in. sieve)(100)/(cumulative percent retained on the No. 8 sieve)

The Workability Factor (W) is defined as the cumulative percent passing the No. 8 sieve. However, W shall be adjusted, upwards only, by 2.5 percentage points for each 94 pounds of cementitious material per cubic yard greater than 564 pounds per cubic yard.

d. A diagram shall be plotted using a rectangular scale with W on the Y-axis with units from 20 (bottom) to 45 (top), and with CF on the X-axis with units from 80 (left side) to 30 (right side). On this diagram a parallelogram shall be plotted with corners at the following coordinates (CF-75, W-28), (CF-75, W-40), (CF-45, W-32.5), and (CF-45, W-41). If the point determined by the intersection of the computed CF and W does not fall within the above parallelogram, the grading of each size of aggregate used and the proportions selected shall be changed as necessary.

e. In addition, the individual percent retained on each sieve shall be plotted for the combined aggregate grading, on either rectangular or semi-log graph paper. The graph shall show a relative smooth transition between coarse and fine aggregate and shall have no major valleys or peaks in the area smaller than the No. 8 sieve. If this plot does not meet the above criteria, the grading of each size aggregate used and the proportions selected shall be changed as necessary.

2.2.1 Aggregate Sources

Fine and coarse aggregates to be used in all concrete shall be evaluated and tested by the Contractor for alkali-aggregate reactivity in accordance with ASTM C 1260. Both coarse aggregate size groups shall be tested if from different sources. Test results shall have a measured expansion equal to or less than 0.08 percent at 16 days after casting. Should the test data indicate an expansion greater than 0.08 percent, the aggregate(s) shall be rejected, or additional testing, using a modified version of ASTM C 1260, shall be performed by the Contractor as described below. ASTM C 1260 shall be modified as follows to include one of the following options:

a. Utilize the Contractor's proposed low alkali portland cement and Class F fly ash in combination for the test proportioning. Class F fly ash shall contain less than 8 percent Calcium Oxide (CaO) and shall be used in the range of 25 to 40 percent of the total cementitious material by mass. The quantity shall be determined that will meet all the requirements of these specifications and which will lower the expansion equal to or less than 0.08 percent at 16 days after casting.

b. Utilize the Contractor's proposed low alkali portland cement and ground granulated blast furnace (GGBF) slag in combination for the test proportioning. GGBF slag shall be used in the range of 40 to 50 percent of the total cementitious material by mass. The quantity shall be determined that will meet all the requirements of these specifications and which will lower the expansion equal to or less than 0.08 percent at 16 days after casting.

If any of the above options does not lower the expansion equal to or less than 0.08 percent at 16 days after casting, the aggregate(s) shall be rejected and the Contractor shall submit new aggregate sources for retesting. The results of the testing shall be submitted to the Contracting Officer for evaluation and acceptance.

2.2.2 Coarse Aggregate

Coarse aggregate shall have a satisfactory service record of at least 5 years successful service in three paving projects or, if a new source is used, shall meet the requirements when tested for resistance to freezing and thawing.

2.2.2.1 Material Composition

Coarse aggregate shall consist of crushed stone.

2.2.2.2 Quality

Aggregates as delivered to the mixers shall consist of clean, hard, uncoated particles meeting the requirements of ASTM C 33 and other requirements specified herein. Coarse aggregate shall be washed. Washing shall be sufficient to remove dust and other coatings.

2.2.2.3 Particle Shape Characteristics

Particles of the coarse aggregate shall be generally spherical or cubical in shape. The quantity of flat and elongated particles in any size group shall not exceed 20 percent by weight as determined by COE CRD-C 119. A flat particle is defined as one having a ratio of width to thickness greater than 3; an elongated particle is one having a ratio of length to width greater than 3.

2.2.2.4 Size and Grading

The nominal maximum size of the coarse aggregate shall be 1-1/2 inches and shall meet the size groups below. When the nominal maximum coarse size is greater than 1 inch, the aggregates shall be furnished in two size groups as follows:

Nominal Maximum Size Inches	Size Group
3/4	ASTM C 33 --No.67 (No. 4 to 3/4 inch)
1-1/2	ASTM C 33 --No. 4 (3/4 to 1-1/2 inch

Nominal Maximum Size Inches	Size Group

The grading of the coarse aggregate within the separated size groups shall conform to the requirements of ASTM C 33, Sizes 67 and 4 as delivered to the mixer.

2.2.2.5 Deleterious Materials - Airfield Pavements

The amount of deleterious material in each sieve size of coarse aggregate shall not exceed the limits shown in Table 5 below, determined in accordance with the test methods shown.

TABLE 5
LIMITS OF DELETERIOUS MATERIALS IN COARSE AGGREGATE
FOR AIRFIELD PAVEMENTS
Percentage by Mass

Materials	Areas with Minor Popouts Moderate Weather
Clay lumps and friable particles (ASTM C 142)	2.0
Shale (a) (ASTM C 295)	1.0
Material finer than 0.075 mm (No. 200 sieve) (b) (ASTM C 117)	1.0
Lightweight particles (c) (ASTM C 123)	0.5
Clay ironstone (d) (ASTM C 295)	1.0
Chert and cherty stone (less than 2.40 Mg/cubic meter density SSD (2.40 Sp. Gr.)) (e) (ASTM C 295)	5.0
Claystone, mudstone, and siltstone (f) (ASTM C 295)	1.0
Shaly and argillaceous limestone (g) (ASTM C 295)	1.0
Other soft particles COE CRD-C 130	2.0
Total of all deleterious	5.0

TABLE 5
LIMITS OF DELETERIOUS MATERIALS IN COARSE AGGREGATE
FOR AIRFIELD PAVEMENTS
Percentage by Mass

Materials	Areas with Minor Popouts	Moderate Weather
substances exclusive of material finer than 0.075 mm (No. 200 sieve)		

a. Shale is defined as a fine-grained, thinly laminated or fissile sedimentary rock. It is commonly composed of clay or silt or both. It has been indurated by compaction or by cementation, but not so much as to have become slate.

b. Limit for material finer than 0.075 mm (No. 200 sieve) will be increased to 1.5 percent for crushed aggregates if the fine material consists of crusher dust that is essentially free from clay or shale.

c. The separation medium shall have a density of 2.0 Mg/cubic meter (Sp. Gr. of 2.0). This limit does not apply to coarse aggregate manufactured from blast-furnace slag unless contamination is evident.

d. Clay ironstone is defined as an impure variety of iron carbonate, iron oxide, hydrous iron oxide, or combinations thereof, commonly mixed with clay, silt, or sand. It commonly occurs as dull, earthy particles, homogeneous concretionary masses, or hard-shell particles with soft interiors. Other names commonly used for clay ironstone are "chocolate bars" and limonite concretions.

e. Chert is defined as a rock composed of quartz, chalcedony or opal, or any mixture of these forms of silica. It is variable in color. The texture is so fine that the individual mineral grains are too small to be distinguished by the unaided eye. Its hardness is such that it scratches glass but is not scratched by a knife blade. It may contain impurities such as clay, carbonates, iron oxides, and other minerals. Other names commonly applied to varieties of chert are: flint, jasper, agate, onyx, hornstone, porcellanite, novaculite, sard, carnelian, plasma, bloodstone, touchstone, chrysoprase, heliotrope, and petrified wood. Cherty stone is defined as any type of rock (generally limestone) that contains chert as lenses and nodules, or irregular masses partially or completely replacing the original stone.

f. Claystone, mudstone, or siltstone, is defined as a massive fine-grained sedimentary rock that consists predominantly of indurated clay or silt without laminations or fissility. It may be indurated either by compaction or by cementation.

g. Shaly limestone is defined as limestone in which shale occurs as one or more thin beds or laminae. These laminae may be regular or very irregular and may be spaced from a few inches down to minute fractions of an inch. Argillaceous limestone is defined as a limestone in which clay minerals occur disseminated in the stone in the amount of 10 to 50 percent by weight of the rock; when these make up from 50 to 90 percent, the rock is known as calcareous (or dolomitic) shale (or claystone, mudstone, or siltstone).

2.2.2.6 Testing Sequence Deleterious Materials -- Airfields Only

The size of the sample shall be at least 200 pounds for the 3/4 to 1-1/2 inch size and 25 pounds for the No. 4 to 3/4 inch coarse aggregate and 10 pounds for the fine aggregate. The Contractor shall provide facilities for the ready procurement of representative test samples. Samples shall be taken and tested by and at the expense of the Contractor, using appropriate Corps of Engineers laboratory and ASTM test methods. Additional tests and analyses of aggregates at various stages in the processing and handling operations may be made by the Government at the discretion of the Contracting Officer. Such Government testing will not relieve the Contractor of any of its testing responsibilities. The testing procedure on each sample of coarse aggregate for compliance with limits on deleterious materials shall be as follows:

Step 1: Test approximately one-fifth of sample for material finer than the No. 200 sieve.

Step 2: Wash off material finer than No. 200 sieve from the remainder of the sample and recombine the remainder with material retained on the No. 200 sieve from Step 1.

Step 3: Test remaining full sample for clay lumps and friable particles and remove.

Step 4: Test remaining full sample for lightweight particles and remove, and then for chert and/or cherty stone with SSD density of less than 2.40 Mg/cubic meter (Sp. Gr. 2.40) and remove.

Step 5: Test remaining sample for clay-ironstone, shale, claystone, mudstone, siltstone, shaly and/or argillaceous limestone, and remove.

Step 6: Test approximately one-fifth of remaining full sample for other soft particles.

Determination of deleterious materials listed in Steps 4 and 5 shall be performed by an individual specifically trained in petrographic identification. The individual selected to perform the identification of these deleterious materials shall be subject to approval and, at least 10 days before any individual is proposed to commence this type of work, the Contractor shall submit a written r,sum, of the individual's training and experience for approval by the Contracting Officer. The Contractor will not be entitled to any extension of time or additional payment due to any delays caused by the testing, evaluation, or personnel requirements.

2.2.2.7 Resistance to Freezing and Thawing

Coarse aggregate not having a satisfactory demonstrable service record shall have a durability factor of 50 or more when subjected to freezing and

thawing in concrete in accordance with COE CRD-C 114.

2.2.2.8 Resistance to Abrasion

Coarse aggregate shall not show more than 40 percent loss when subjected to the Los Angeles abrasion test in accordance with ASTM C 131.

2.2.3 Fine Aggregate

Fine aggregate shall have a service record of at least 5 years satisfactory service in three paving projects or, if a new source is used, shall meet the requirements for resistance to freezing and thawing.

2.2.3.1 Composition

Fine aggregate shall consist of natural sand, manufactured sand, or a combination of the two, and shall be composed of clean, hard, durable particles. Irrespective of the source from which it is obtained, all fine aggregate shall be composed of clean, hard, durable particles meeting the requirements of ASTM C 33. Each type of fine aggregate shall be stockpiled and batched separately. Any degree of contamination will be cause for the rejection of the entire stockpile.

2.2.3.2 Particle Shape

Particles of the fine aggregate shall be generally spherical or cubical in shape.

2.2.3.3 Grading

Grading of the fine aggregate, as delivered to the mixer, shall conform to the requirements of ASTM C 33. In addition, the fine aggregate, as delivered to the mixer, shall have a fineness modulus of not less than 2.50 nor more than 3.00. The grading of the fine aggregate also shall be controlled so that the fineness moduli of at least nine of every set of ten consecutive samples of the fine aggregate, as delivered to the mixer, will not vary more than 0.15 from the average fineness moduli of all samples previously taken. The fineness modulus shall be determined by COE CRD-C 104.

2.2.3.4 Deleterious Material

The amount of deleterious material in the fine aggregate shall not exceed the following limits by mass:

Material	Percentage by Mass
Clay lumps and friable particles ASTM C 142	1.0
Material finer than 0.075 mm (No. 200 sieve) ASTM C 117	3.0
Lightweight particles ASTM C 123 using a medium with a density of 2.0 Mg/cubic meter (Sp. Gr. of 2.0))	0.5
Total of all above	3.0

2.2.3.5 Resistance to Freezing and Thawing

Fine aggregate not having a satisfactory demonstrable service record shall

have a durability factor of 50 or more when subjected to freezing and thawing in concrete in accordance with COE CRD-C 114.

2.3 CHEMICAL ADMIXTURES

2.3.1 Air-Entraining Admixtures

The air-entraining admixture shall conform to ASTM C 260 and shall consistently entrain the air content in the specified ranges under field conditions. The air-entraining admixture shall be in a solution of suitable concentration for field use.

2.3.2 Accelerator

An accelerator shall be used only when specified in paragraph SPECIFIED CONCRETE STRENGTH AND OTHER PROPERTIES and shall not be used to reduce the amount of cementitious material used. Accelerator shall conform to ASTM C 494/C 494M, Type C. Calcium chloride and admixtures containing calcium chloride shall not be used.

2.3.3 Retarder

A retarding admixture shall meet the requirements of ASTM C 494/C 494M, Type B, except that the 6-month and 1-year compressive strength tests are waived. The use of the admixture is at the option of the Contractor, but shall not be used to reduce the amount of cementitious material.

2.3.4 Water-Reducer

A water-reducing admixture shall meet the requirements of ASTM C 494/C 494M, Type A or D except that the 6-month and 1-year compressive strength tests are waived. The admixture may be added to the concrete mixture only when its use is approved or directed, and only when it has been used in mixture proportioning studies to arrive at approved mixture proportions.

2.4 CURING MATERIALS

2.4.1 Membrane Forming Curing Compound

Membrane forming curing compound shall be a white pigmented compound conforming to COE CRD-C 300.

2.4.2 Burlap

Burlap used for curing shall conform to AASHTO M 182, Class 3 or 4. Materials shall be new or shall be clean materials never used for anything other than curing concrete.

2.5 WATER

Water for mixing and curing shall be fresh, clean, potable, and free of injurious amounts of oil, acid, salt, or alkali, except that non-potable water may be used if it meets the requirements of COE CRD-C 400.

2.6 JOINT MATERIALS

2.6.1 Expansion Joint Material

Expansion joint filler shall be a preformed material conforming to ASTM D

1751. Expansion joint filler shall be 3/4 inch thick.

2.6.2 Slip Joint Material

Slip joint material shall be 1/4 inch thick expansion joint filler conforming to ASTM D 1751 or ASTM D 1752.

2.7 REINFORCING

All reinforcement shall be free from loose, flaky rust, loose scale, oil, grease, mud, or other coatings that might reduce the bond with concrete. Removal of thin powdery rust and tight rust is not required. However, reinforcing steel which is rusted to the extent that it does not conform to the required dimensions or mechanical properties shall not be used.

2.7.1 Reinforcing Bars and Bar Mats

Reinforcing bars shall conform to ASTM A 615/A 615M, billet-steel, Grade 60. Bar mats shall conform to ASTM A 184/A 184M. The bar members shall be billet steel.

2.7.2 Welded Wire Fabric

Welded steel wire fabric shall conform to ASTM A 185.

2.7.3 Deformed Wire Fabric

Welded deformed steel wire fabric shall conform to ASTM A 497.

2.7.4 Steel Fiber Reinforcing

Minimum ultimate tensile strength of the fibers shall be 50,000 psi. The maximum aspect ratio (length divided by diameter) shall not exceed 100. Fibers longer than 2-1/2 inches shall not be used without approval of the Contracting Officer. The fibers shall be deformed and shall be furnished in small bundles adhered with water soluble glue. The fibers shall be clean and free of rust, oil, and deleterious materials.

2.8 DOWELS AND TIE BARS

2.8.1 Dowels

Dowels shall be single piece bars fabricated or cut to length at the shop or mill before delivery to the site. Dowels shall be free of loose, flaky rust and loose scale and shall be clean and straight. Dowels may be sheared to length provided that the deformation from true shape caused by shearing does not exceed 0.04 inch on the diameter of the dowel and does not extend more than 0.04 inch from the end of the dowel. Dowels shall be plain (non-deformed) steel bars conforming to ASTM A 615/A 615M, Grade 40 or 60; ASTM A 616/A 616M, Grade 50 or 60; or ASTM A 617/A 617M, Grade 40 or 60; or shall be steel pipe conforming to ASTM A 53/A 53M, extra strong, as indicated. If split dowels are proposed for use, a complete description of the materials and installation procedures shall be submitted for approval at least 15 days before start of construction. Paint for dowels shall conform to MIL-DTL-24441/20.

2.8.2 Tie Bars

Tie bars shall be deformed steel bars conforming to ASTM A 615/A 615M, ASTM

A 616/A 616M, or ASTM A 617/A 617M, Grade 60, and of the sizes and dimensions indicated. Deformed rail steel bars and high-strength billet or axle steel bars, Grade 60 or higher, shall not be used for bars that are bent and straightened during construction.

2.9 EPOXY RESIN

All epoxy-resin materials shall be two-component materials conforming to the requirements of ASTM C 881, Class as appropriate for each application temperature to be encountered, except that in addition, the materials shall meet the following requirements:

a. Material for use for embedding dowels and anchor bolts shall be Type IV, Grade 3.

b. Material for use as patching materials for complete filling of spalls, wide cracks, and other voids and for use in preparing epoxy resin mortar shall be Type III, Grade as approved.

c. Material for use for injecting cracks shall be Type IV, Grade 1.

d. Material for bonding freshly mixed portland cement concrete or mortar or freshly mixed epoxy resin concrete or mortar to hardened concrete shall be Type V, Grade as approved.

2.10 SPECIFIED CONCRETE STRENGTH AND OTHER PROPERTIES

2.10.1 Specified Flexural Strength

Specified flexural strength, R, for concrete is 700 psi at 90 days, as determined by tests made in accordance with ASTM C 78 of beams fabricated and cured in accordance with ASTM C 192/C 192M or as determined by equivalent flexural strength for acceptance as specified in paragraph, Flexural Strength. Maximum allowable water-cementitious material ratio is 0.45. The water-cementitious material ratio will be the equivalent water-cement ratio as determined by conversion from the weight ratio of water to cement plus pozzolan, silica fume, and ground granulated blast furnace slag by the mass equivalency method described in ACI 211.1. The concrete shall be air-entrained with a total air content of 6 plus or minus 1.5 percentage points, at the point of placement. Air content shall be determined in accordance with ASTM C 231. The maximum allowable slump of the concrete at the point of placement shall be 2 inches for pavement constructed with fixed forms. For slipformed pavement, at the start of the project, the Contractor shall select a maximum allowable slump which will produce in-place pavement meeting the specified tolerances for control of edge slump.

2.10.2 Concrete Temperature

The temperature of the concrete as delivered shall conform to the requirements of paragraphs, Paving in Hot Weather and Paving in Cold Weather. Temperature of concrete shall be determined in accordance with ASTM C 1064/C 1064M.

2.10.3 Concrete Strength for Final Acceptance

The strength of the concrete will be considered acceptable when the average equivalent 90-day flexural strengths for each lot are above the 'Specified Flexural Strength' as determined by correlation with 14-day compressive

strength tests specified in paragraph MIXTURE PROPORTIONS BY CONTRACTOR for 90-day flexural strength, and no individual set (2 cylinders per sublot) in the lot are 25 psi or more below the equivalent 'Specified Flexural Strength'. If any lot or sublot, respectively, fails to meet the above criteria, the lot or sublot shall be removed and replaced at no additional cost to the Government. This is in addition to and does not replace the average strength required for day-to-day CQC operations as specified in paragraph Average Flexural Strength Required for Mixtures.

2.11 MIXTURE PROPORTIONS BY CONTRACTOR

2.11.1 Composition

Concrete shall be composed of cementitious material, water, fine and coarse aggregates, and admixtures. Fly ash, if used with non alkali-reactive aggregates, shall consist of not less than 15 percent of the cementitious material by mass and not more than 35 percent. GGBF slag, if used with non alkali-reactive aggregates, shall consist of not less than 20 percent of the cementitious material by mass and not more than 50 percent. If Class F fly ash or GGBF slag is required to mitigate potential alkali-aggregate reactivity, the percentage by mass determined from the modified ASTM C 1260 testing shall be used in the mixture proportioning studies. The total cementitious material content shall be at least 470 lb./cu. yd. or 517 lb./cu. yd. if pozzolan is used. Admixtures shall consist of air entraining admixture and may also include, as approved accelerator, retarder, or water-reducing admixture. If water-reducer is used, it shall be used only at the dosage determined during mixture proportioning studies. High range water-reducing admixtures and admixtures to produce flowable concrete shall not be used.

2.11.2 Concrete Proportioning Studies, Pavement Concrete

Trial design batches, mixture proportioning studies, and testing requirements shall be the responsibility of the Contractor. Mixture proportioning studies shall be performed by a commercial laboratory, inspected by the Government, and approved in writing. The laboratory performing the mixture proportioning shall conform with ASTM C 1077. Strength requirements during mixture proportioning studies shall be based on flexural strength as determined by test specimens fabricated in accordance with ASTM C 192/C 192M and tested in accordance with ASTM C 78. Samples of all materials used in mixture proportioning studies shall be representative of those proposed for use on the project and shall be accompanied by the manufacturer's or producer's test reports indicating compliance with these specifications. Trial mixtures having proportions, slumps, and air content suitable for the work shall be based on methodology described in ACI 211.1, modified as necessary to accommodate flexural strength.

2.11.2.1 Water-Cement Ratio

At least three different water-cement ratios, which will produce a range of strength encompassing that required on the project, shall be used. The maximum allowable water-cement ratio required in paragraph Maximum Water-Cement Ratio will be the equivalent water-cement ratio as determined by conversion from the mass ratio of water to cement plus pozzolan, silica fume, and ground granulated blast furnace (GGBF) slag by the weight equivalency method as described in ACI 211.1. In the case where silica fume or GGBF slag is used, the mass of the silica fume and GGBF slag shall be included in the equations in ACI 211.1 for the term P, which is used to

denote the mass of pozzolan. Laboratory trial mixtures shall be proportioned for maximum permitted slump and air content.

2.11.2.2 Trial Mixture Studies

Separate sets of trial mixture studies shall be made for each combination of cementitious materials and each combination of admixtures proposed for use. No combination of either shall be used until proven by such studies, except that, if approved in writing and otherwise permitted by these specifications, an accelerator or a retarder may be used without separate trial mixture study. Separate trial mixture studies shall also be made for concrete for any placing method proposed which requires special properties. The temperature of concrete in each trial batch shall be reported. Each mixture shall be designed to promote easy and suitable concrete placement, consolidation and finishing, and to prevent segregation and excessive bleeding. Concrete proportioning studies shall be performed using the following procedures:

2.11.2.3 Mixture Proportioning for 90-day Flexural Strength

The following step by step procedure shall be followed:

a. Fabricate all beams and cylinders for each mixture from the same batch or blend of batches. Fabricate and cure all beams and cylinders in accordance with ASTM C 192/C 192M, using 6 x 6 inch beams and 6 x 12 inch cylinders.

b. Test beams in accordance with ASTM C 78, cylinders in accordance with ASTM C 39/C 39M.

c. Fabricate and cure test beams from each mixture for 7, 14, 28 and 90-day flexural tests; 6 beams to be tested per age.

d. Fabricate and cure test cylinders from each mixture for 7, 14, 28 and 90-day compressive strength tests; 6 cylinders to be tested per age.

e. Using the average strength for each w/c at each age, plot all results from each of the three mixtures on separate graphs for w/c versus:

   7-day flexural strength
   14-day flexural strength
   28-day flexural strength
   90-day flexural strength

   7-day compressive strength
   14-day compressive strength
   28-day compressive strength
   90-day compressive strength

f. From these graphs select a w/c that will produce a mixture giving a 90-day flexural strength equal to the required strength determined in accordance with paragraph "Average Flexural Strength Required for Mixtures".

g. Using the above selected w/c, select from the graphs the expected 7, 14, 28 and 90-day flexural strengths and the expected 7, 14, 28 and 90-day compressive strengths for the mixture.

h. From the above expected strengths for the selected mixture determine the following Correlation Ratios:

(1) Ratio of the 14-day compressive strength of the selected mixture to the 90-day flexural strength of the mixture (for acceptance).

(2) Ratio of the 7-day compressive strength of the selected mixture to the 90-day flexural strength of the mixture (for CQC control).

i. If there is a change in materials, additional mixture design studies shall be made using the new materials and new Correlation Ratios shall be determined.

j. No concrete pavement shall be placed until the Contracting Officer has approved the Contractor's mixture proportions.

2.11.3 Contractor Quality Control for Average Flexural Strength

The Contractor's day to day production shall be Controlled (CQC) in accordance with the criteria herein, in the following subparagraphs, and in par. 'Concrete Strength Testing for CQC'. This is entirely different from the acceptance requirements of par. 'Concrete Strength for Final Acceptance', and it is mandatory that both sets of requirements must be met. If at any time, the 'equivalent average 90-day flexural strength', for any lot, as determined by correlation with results of 7-day compressive test specimens, is 69 psi or more below the 'required equivalent average 90-day flexural strength', as specified below, the paving operation shall be stopped and the Contractor shall take necessary steps to improve the mixture proportioning, materials, or the batching and mixing to increase the strength. The paving operations shall not recommence until the Contracting Officer has approved the Contractor's Proposed changes in writing.

2.11.3.1 Average CQC Flexural Strength Required for Mixtures

In order to ensure meeting, the strength requirements specified in paragraph SPECIFIED CONCRETE STRENGTH AND OTHER PROPERTIES, during production, the mixture proportions selected during mixture proportioning studies and used during construction shall produce a required average CQC flexural strength exceeding the specified strength, R, by the amount indicated below. This required average CQC flexural strength, Ra, will be used only for CQC operations as specified in paragraph TESTING AND INSPECTION FOR CONTRACTOR QUALITY CONTROL and as specified in the previous paragraph. During production, the required Ra shall be adjusted (increased or decreased), as appropriate and as approved, based on the standard deviation of equivalent 90-day strengths being attained during paving.

a. From Previous Test Records: Where a concrete production facility has previous test records, a standard deviation shall be established in accordance with the applicable provisions of ACI 214.3R. Test records from which a standard deviation is calculated shall represent materials, quality control procedures, and conditions similar to those expected, shall represent concrete produced to meet a specified flexural strength or strengths within 150 psi of the 90-day flexural strength specified for the proposed work, and shall consist of at least 30 consecutive tests. A

strength test shall be the average of the strengths of two specimens made from the same sample of concrete and tested at 90 days. Required average CQC flexural strength, Ra, used as the basis for selection of concrete proportions shall be the value from the equation that follows, using the standard deviation as determined above:

Ra = R + 1.34S

Where: S = standard deviation
R = specified flexural strength
Ra = required average flexural strength

Where a concrete production facility does not have test records meeting the requirements above but does have a record based on 15 to 29 consecutive tests, a standard deviation shall be established as the product of the calculated standard deviation and a modification factor from the following table:

NUMBER OF TESTS	MODIFICATION FACTOR FOR STANDARD DEVIATION
15	1.16
20	1.08
25	1.03
30 or more	1.00

b. Without Previous Test Records: When a concrete production facility does not have sufficient field strength test records for calculation of the standard deviation, the required average strength, Ra, shall be determined by adding 15 percent to the specified flexural strength, R.

PART 3 EXECUTION

3.1 PREPARATION FOR PAVING

Before commencing paving, the following shall be performed. Surfaces to receive concrete shall be prepared as specified below. If used, forms shall be in place, cleaned, coated, and adequately supported. Any reinforcing steel needed shall be at the paving site. All transporting and transfer equipment shall be ready for use, clean, and free of hardened concrete and foreign material. Equipment for spreading, consolidating, screeding, finishing, and texturing concrete shall be at the paving site, clean and in proper working order. All equipment and material for curing and for protecting concrete from weather or mechanical damage shall be at the paving site, in proper working condition, and in sufficient amount for the entire placement. When hot, windy conditions during paving appear probable, equipment and material shall be at the paving site to provide windbreaks, shading, fogging, or other action to prevent plastic shrinkage cracking or other damaging drying of the concrete.

3.2 CONDITIONING OF UNDERLYING MATERIAL

3.2.1 General Procedures

Underlying material upon which concrete is to be placed shall be clean, damp, and free from debris, waste concrete or cement, frost, ice, and

standing or running water. Prior to setting forms or placement of concrete, the underlying material shall be well drained and shall have been satisfactorily graded and uniformly compacted in accordance with the applicable Section of these specifications. The surface of the subgrade or base course shall be tested as to crown, elevation, and density in advance of setting forms or of concrete placement using slip-form techniques. High areas shall be trimmed to proper elevation. Low areas shall be filled and compacted to a condition similar to that of surrounding grade, or filled with concrete monolithically with the pavement. Where low areas are filled with concrete, the areas shall be marked, as approved, and cores for thickness determinations as required by paragraph, Flexural Strength and Thickness shall not be drilled in those areas. Any underlying material disturbed by construction operations shall be reworked and recompacted to specified density immediately in front of the paver. If a slipform paver is permitted and is used, the same underlying material under the paving lane shall be continued beyond the edge of the lane a sufficient distance and shall be thoroughly compacted and true to grade to provide a suitable trackline for the slipform paver and firm support for the edge of the paving lane. Where an open-graded granular base is required under the concrete, the Contractor shall select paving equipment and procedures which will operate properly on the base course without causing displacement or other damage.

3.2.2 Traffic on Underlying Material

After the underlying material has been prepared for concrete placement, no equipment shall be permitted thereon. Subject to specific approval, crossing of the prepared subgrade or base course at specified intervals for construction purposes may be permitted, provided rutting or indentations do not occur; however, if traffic has been allowed to use the prepared subgrade or base course, the surface shall be reworked and reprepared to the satisfaction of the Contracting Officer before concrete is placed.

3.3 WEATHER LIMITATIONS

3.3.1 Placement and Protection During Inclement Weather

The Contractor shall not commence placing operations when heavy rain or other damaging weather conditions appear imminent. At all times when placing concrete, the Contractor shall maintain on-site sufficient waterproof cover and means to rapidly place it over all unhardened concrete or concrete that might be damaged by rain. Placement of concrete shall be suspended whenever rain or other damaging weather commences to damage the surface or texture of the placed unhardened concrete, washes cement out of the concrete, or changes the water content of the surface concrete. All unhardened concrete shall be immediately covered and protected from the rain or other damaging weather. Any pavement damaged by rain or other weather shall be completely removed and replaced at the Contractor's expense as specified in paragraph, Repair, Removal, Replacement of Slabs.

3.3.2 Paving in Hot Weather

When the ambient temperature during paving is expected to exceed 90 degrees F, the concrete shall be properly placed and finished in accordance with procedures previously submitted and as specified herein. The concrete temperature at time of delivery to the forms shall not exceed the temperature shown in the table below when measured in accordance with ASTM C 1064/C 1064M. Cooling of the mixing water or aggregates or placing in the cooler part of the day may be required to obtain an adequate placing

temperature. An approved retarder may be used to facilitate placing and finishing. Steel forms and reinforcing shall be cooled as approved prior to concrete placement when steel temperatures are greater than 120 degrees F. Transporting and placing equipment shall be cooled or protected if necessary to maintain proper concrete-placing temperature. Concrete shall be placed continuously and rapidly at a rate of not less than 100 feet of paving lane per hour. The finished surfaces of the newly laid pavement shall be kept damp by applying a fog spray (mist) with approved spraying equipment until the pavement is covered by the curing medium. If necessary, wind screens shall be provided to protect the concrete from an evaporation rate in excess of 0.2 lb./square foot per hour, as determined by method shown in Figure 2.1.5 of ACI 305R.

Maximum Allowable Concrete Placing Temperature

Relative Humidity, Percent, During Time of Concrete Placement	Maximum Allowable Concrete Temperature in Degrees F
Greater than 60	90
40-60	85
Less than 40	80

3.3.3 Prevention of Plastic Shrinkage Cracking

During hot weather with low humidity, and particularly with appreciable wind, the Contractor shall develop and institute measures to prevent plastic shrinkage cracks from developing. Particular care shall be taken if plastic shrinkage cracking is potentially imminent and especially if it has developed during a previous placement. Periods of high potential for plastic shrinkage cracking can be anticipated by use of Fig. 2.1.5 of ACI 305R. In addition to the protective measures specified in the previous paragraph, the concrete placement shall be further protected by erecting shades and windbreaks and by applying fog sprays of water, sprinkling, ponding, or wet covering. When such water treatment is stopped, curing procedures shall be immediately commenced. Plastic shrinkage cracks that occur shall be filled by injection of epoxy resin as directed, after the concrete hardens. Plastic shrinkage cracks shall never be troweled over or filled with slurry.

3.3.4 Paving in Cold Weather

Special protection measures, as submitted and approved, and as specified herein, shall be used if freezing temperatures are anticipated before the expiration of the specified curing period. The ambient temperature of the air at the placing site and the temperature of surfaces to receive concrete shall be not less 40 degrees F. However, placement may begin when both the ambient temperature and the temperature of the underlying material are at least 35 degrees F and rising. When the ambient temperature is less than 50 degrees F, the temperature of the concrete when placed shall be not less than 50 degrees F nor more than 75 degrees F. Heating of the mixing water or aggregates will be required to regulate the concrete placing temperature. Materials entering the mixer shall be free from ice, snow, or frozen lumps. Salt, chemicals or other materials shall not be incorporated in the concrete to prevent freezing. Calcium chloride shall not be used at any time. Covering and other means shall be provided for maintaining the concrete at a temperature of at least 50 degrees F for not less than 72 hours after placing, and at a temperature above freezing for the remainder

of the curing period. Pavement damaged by freezing shall be completely removed and replaced at the Contractor's expense as specified in paragraph REPAIR, REMOVAL, REPLACEMENT OF SLABS.

3.4 CONCRETE PRODUCTION

Batching, mixing, and transporting equipment shall have a capacity sufficient to maintain a continuous, uniform forward movement of the paver of not less than 2.5 feet per minute. Concrete shall be deposited in front of the paver within 45 minutes from the time cement has been charged into the mixing drum, except that if the ambient temperature is above 90 degrees F, the time shall be reduced to 30 minutes. No water shall be added to the concrete after it is batched except that, if truck mixers are permitted, water may be added at the paving site to adjust the slump as approved, provided the maximum allowable w/c is not exceeded. Such water shall be injected under pressure as described in subparagraph, Truck Mixers. Every load of concrete delivered to the paving site shall be accompanied by a batch ticket from the operator of the batching plant. Tickets shall be on approved forms and shall show at least the mass, or volume, of all ingredients in each batch delivered, the water meter and revolution meter reading on truck mixers and the time of day. Tickets shall be delivered to the placing foreman who shall keep them on file and deliver them to the Government weekly.

3.4.1 Batching and Mixing Concrete

The batching and mixing equipment and the operation thereof shall conform to the requirements of paragraph EQUIPMENT and as specified herein. All equipment shall be kept clean and in operable condition at all times. Scale pivots and bearings shall be kept clean and free of rust. Any equipment which fails to perform as specified shall immediately be removed from use until properly repaired and adjusted, or replaced.

3.4.2 Transporting and Transfer - Spreading Operations

The transporting and transfer equipment and the operation thereof shall conform to the requirements of paragraph EQUIPMENT and as specified herein. All equipment shall be kept clean and in operable condition at all times. Non-agitating equipment shall be used only on smooth roads and for haul time less than 15 minutes at all times during the work day. No transporting equipment shall be allowed to operate on the prepared and compacted underlying material in front of the paver-finisher. An approved transfer spreader shall be used to transfer the concrete from hauling equipment outside the paving lane and to spread it evenly and strike it off to approximate grade in front of the paver-finisher. Concrete shall be deposited as close as possible to its final position in the paving lane. All equipment shall be operated to discharge and transfer concrete without segregation. In no case shall dumping of concrete in discrete piles be permitted. No transfer or spreading operation which requires the use of front-end loaders, dozers, or similar equipment to distribute the concrete will be permitted. All batching and mixing, transporting, transferring, paving, and finishing shall be properly coordinated and controlled such that the paver-finisher has a continuous forward movement at a reasonably uniform speed from beginning to end of each paving lane, except for inadvertent equipment breakdown. Failure to achieve this shall require the Contractor to halt operations, regroup, and modify operations to achieve this requirement.

3.5 PAVING

3.5.1 General Requirements

The paving and finishing equipment and the operation thereof shall conform to the requirements of paragraph EQUIPMENT and as specified herein. All equipment shall be kept clean and properly operable at all times. Pavement shall be constructed with paving and finishing equipment utilizing rigid fixed forms or by use of slipform paving equipment. Paving and finishing equipment and procedures shall be capable of constructing paving lanes of the required width at a rate of at least 100 feet of paving lane per hour on a routine basis. Paving equipment and its operation shall be controlled, and coordinated with all other operations, such that the paver-finisher has a continuous forward movement, at a reasonably uniform speed, from beginning to end of each paving lane, except for inadvertent equipment breakdown. Workmen with foreign material on their footwear or construction equipment that might deposit foreign material shall not be permitted to walk or operate in the plastic concrete.

3.5.2 Consolidation

Concrete shall be consolidated with the specified type of lane-spanning, gang-mounted, mechanical, immersion type vibrating equipment mounted in front of the paver, supplemented, in rare instances as specified, by hand-operated vibrators. Gang-mounted vibrator spuds shall be spaced so as to thoroughly consolidate the entire paving lane, but not more than 30 inch spacing, and with the outside vibrators not more than 12 inches from the edge of the lane. The vibrators shall be inserted into the concrete to a depth that will provide the best full-depth consolidation but not closer to the underlying material than 2 inches. The vibrators or any tamping units in front of the paver shall be automatically controlled so that they shall be stopped immediately as forward motion ceases. Excessive vibration shall not be permitted. If the vibrators cause visible tracking in the paving lane, the paving operation shall be stopped and equipment and operations modified to prevent it. Concrete in small, odd-shaped slabs or in isolated locations inaccessible to the gang-mounted vibration equipment shall be vibrated with an approved hand-operated immersion vibrator. Vibrators shall not be used to transport or spread the concrete. Hand-operated vibrators shall not be operated in the concrete at one location for more than 20 seconds. For each paving train, at least one additional vibrator spud, or sufficient parts for rapid replacement and repair of vibrators shall be maintained at the paving site at all times. Any evidence of inadequate consolidation (honeycomb along the edges, large air pockets, or any other evidence) shall require the immediate stopping of the paving operation and approved adjustment of the equipment or procedures.

3.5.3 Operation

When the paver approaches a header at the end of a paving lane, a sufficient amount of concrete shall be maintained ahead of the paver to provide a roll of concrete which will spill over the header. The amount of extra concrete shall be sufficient to prevent any slurry that is formed and carried along ahead of the paver from being deposited adjacent to the header. The spud vibrators in front of the paver shall be brought as close to the header as possible before they are lifted. Additional consolidation shall be provided adjacent to the headers by hand-manipulated vibrators. When the paver is operated between or adjacent to previously constructed pavement (fill-in lanes), provisions shall be made to prevent damage to the previously constructed pavement. Transversely oscillating screeds and extrusion plates shall overlap the existing pavement the minimum possible,

but in no case more than 8 inches. These screeds or extrusion plates shall be electronically controlled from the previously placed pavement so as to prevent them from applying pressure to the existing pavement and to prevent abrasion of the pavement surface. The overlapping area of existing pavement surface shall at all times be kept completely free of any loose or bonded foreign material as the paver-finisher operates across it. When the paver travels on existing pavement, approved provisions shall be made to prevent damage to the existing pavement. Pavers using transversely oscillating screeds shall not be used to form fill-in lanes that have widths less than a full width for which the paver was designed or adjusted.

3.5.4 Required Results

The paver-finisher, and its gang-mounted vibrators, together with its operating procedures shall be adjusted and operated and coordinated with the concrete mixture being used to produce a thoroughly consolidated slab throughout, true to line and grade within specified tolerances. The screed or the extrusion plate shall be properly adjusted to produce a pavement surface true to line and grade. Any necessary adjustment to compensate for surging behind the screed or for inadequate height of surface after paving shall be carefully made and checked frequently. The paver-finishing operation shall produce a surface finish free of irregularities, tears, voids of any kind, and any other discontinuities. It shall produce only a very minimum of paste at the surface; never more than 3/32 inch cover over the top layer of coarse aggregate. The paver-finisher shall make only one pass across the pavement; multiple passes will not be permitted. The equipment and its operation shall produce a finished surface requiring no hand finishing other than the use of cutting straightedges, except in very infrequent instances. If any equipment or operation fails to produce the above results, the paving shall be stopped, the equipment shall be replaced or properly adjusted, the operation shall be appropriately modified, or the mixture proportions modified, in order to produce the required results before recommencing paving. No water, other than true fog sprays (mist) as specified in paragraph, Prevention of Plastic Shrinkage Cracking, shall be applied to the concrete or the concrete surface during paving and finishing.

3.5.5 Fixed Form Paving

Paving equipment for fixed-form paving and the operation thereof shall conform to the requirements of paragraph EQUIPMENT, all requirements specified above under paragraph PAVING and as specified herein.

3.5.5.1 Forms for Fixed-Form Paving

a. Forms shall be steel, except that wood forms may be used for curves having a radius of 150 feet or less, and for fillets. Forms shall be equal in depth to the edge thickness of the slab as shown on the drawings. Forms shall be in one piece for the full depth required, except as permitted below. Under no conditions shall forms be adjusted by filling or excavating under the forms to an elevation other than the bottom of the pavement slab. Where the project requires several different slab thicknesses, forms may be built up with metal or wood to provide an increase in depth of not more than 25 percent. The required form depth may be obtained by securely bolting or welding to the bottom of the form a tubular metal section of the proper thickness or by securely bolting wood planks to the bottom of the form. The tubular metal section or wood planks shall completely cover the underside of the base of the form and shall extend beyond the edge of the base a sufficient

distance to provide the necessary stability. The base width of the one-piece form, or built-up form, shall be not less than eight-tenths of the vertical height of the form, except that forms 8 inches or less in vertical height shall have a base width not less than the vertical height of the form. Forms shall not be built-up by adding to the top. The top surface of each form section shall not vary more than 1/16 inch in 12 feet from a true line. The face of the form shall not vary more than 3/16 inch in 12 feet from a true plane. Forms with battered top surfaces or distorted faces or bases shall be removed from the project. Where keyway forms are required, they shall be rigidly attached to the main form so no displacement can take place. Metal keyway forms shall be tack-welded to steel forms. Keyway forms shall be so aligned that there is no variation over 1/4 inch either vertically or horizontally, when tested with a 12 foot template after forms are set, including tests across form joints.

b. Steel forms shall be furnished in sections not less than 10 feet in length, except that on curves having a radius of 150 feet or less, the length of the sections shall be 5 feet unless the sections are flexible or curved to the proper radius. Each 10 foot length of form shall be provided with at least three form braces and pin sockets so spaced that the form will be rigidly braced throughout its length. Lock joints between form sections shall be free from play or movement. Forms shall be free of warps, bends, or kinks.

c. Wood forms for curves and fillets shall be made of well-seasoned, surfaced plank or plywood, straight, and free from warp or bend. Wood forms shall be adequate in strength and rigidly braced.

d. The forms shall be set on firm material cut true to grade so that each form section when placed will be firmly in contact with the underlying layer for its entire length and base width. Underlying material shall be thoroughly compacted and trimmed to grade before forms are set in place. Setting forms on blocks or on built-up spots of underlying material will be not permitted under any condition. The form sections shall be staked into position and tightly locked together. The length of pins and quantity provided in each section shall be sufficient to hold the form at the correct line and grade. When tested with a straightedge, the top of the installed form shall conform to the requirements specified for the finished surface of the concrete, and the longitudinal axis of the upstanding leg shall not vary more than 1/4 inch from the straightedge. Conformity to the alignment and grade elevations shown on the drawings shall be checked and necessary corrections shall be made immediately prior to placing the concrete. Forms shall be set well in advance of concrete placement. The forms shall be cleaned and oiled each time before concrete is placed. No concrete shall be placed until setting of forms has been checked and approved by the CQC team.

e. Forms for overlay pavements and for other locations where forms must be set on existing pavements shall be held securely in place with stakes or by other approved methods. Holes in existing pavements for form stakes shall be carefully drilled by methods which will not crack or spall the existing pavement. After use, the holes shall be filled as directed. Any method which does not hold the form securely or which damages the existing pavement

shall be immediately discontinued. Prior to setting forms for paving operations, the Contractor shall demonstrate his proposed form setting procedures at an approved location and shall not proceed further until the proposed method is approved.

3.5.5.2 Form Removal

Forms shall remain in place at least 12 hours after the concrete has been placed. When conditions are such that the early strength gain of the concrete is delayed, the forms shall be left in place for a longer time, as directed. Forms shall be removed by procedures that do not injure the concrete. Bars or heavy metal tools shall not be used directly against the concrete in removing the forms. Any concrete found to be defective after form removal shall be repaired promptly, using procedures specified hereinafter or as directed.

3.5.6 Slipform Paving

3.5.6.1 General

Paving equipment for slipform paving and the operation thereof shall conform to the requirement of paragraph EQUIPMENT, all requirements specified above in subparagraphs, General, Consolidation, Operation, and Required Results, and as specified herein. The slipform paver shall shape the concrete to the specified and indicated cross section, meeting all tolerances, in one pass. The slipform paver shall finish the surface and edges so that only a very minimum isolated amount of hand finishing is required. If the paving operation does not meet the above requirements and the specified tolerances, the operation shall be immediately stopped, and the Contractor shall regroup and replace or modify any equipment as necessary, modify paving procedures or modify the concrete mix, in order to resolve the problem. The slipform paver shall be automatically electronically controlled from a taut wire guideline for horizontal alignment and on both sides from a taut wire guideline for vertical alignment, except that electronic control from a ski operating on a previously constructed adjoining lane shall be used where applicable for either or both sides. Automatic, electronic controls for vertical alignment shall always be used on both sides of the lane. Control from a slope-adjustment control or control operating from the underlying material shall never be used. If approved by the Contracting Officer after a preconstruction demonstration, automatic laser controls may be used in lieu of or to supplement the taut wire guidelines. Side forms on slipform pavers shall be properly adjusted so that the finished edge of the paving lane meets all specified tolerances. Dowels in longitudinal construction joints shall be installed as specified below. The installation of these dowels by dowel inserters attached to the paver or by any other means of inserting the dowels into the plastic concrete shall not be permitted.

3.5.6.2 Guideline for Slipform Paving

Guidelines shall be accurately and securely installed well in advance of concrete placement. Supports shall be provided at necessary intervals to eliminate all sag in the guideline when properly tightened. The guideline shall be high strength wire set with sufficient tension to remove all sag between supports. Supports shall be securely staked to the underlying material or other provisions made to ensure that the supports will not be displaced when the guideline is tightened or when the guideline or supports are accidentally touched by workmen or equipment during construction. The appliances for attaching the guideline to the supports shall be capable of

easy adjustment in both the horizontal and vertical directions. When it is necessary to leave gaps in the guideline to permit equipment to use or cross underlying material, provisions shall be made for quickly and accurately replacing the guideline without any delay to the forward progress of the paver. Supports on either side of the gap shall be secured in such a manner as to avoid disturbing the remainder of the guideline when the portion across the gap is positioned and tightened. The guideline across the gap and adjacent to the gap for a distance of 200 feet shall be checked for horizontal and vertical alignment after the guideline across the gap is tightened. Vertical and horizontal positioning of the guideline shall be such that the finished pavement shall conform to the alignment and grade elevations shown on the drawings within the specified tolerances for grade and smoothness. The specified tolerances are intended to cover only the normal deviations in the finished pavement that may occur under good supervision and do not apply to setting of the guideline. The guideline shall be set true to line and grade.

3.5.6.3 Laser Controls

If the Contractor proposes to use any type of automatic laser controls, a detailed description of the system shall be submitted and a trial field demonstration shall be performed in the presence of the Contracting Officer at least one week prior to start of paving. Approval of the control system will be based on the results of the demonstration and on continuing satisfactory operation during paving.

3.5.7 Placing Reinforcing Steel

The type and amount of steel reinforcement shall be as shown on the drawings. For pavement thickness of 12 inches or more, the reinforcement steel shall be installed by the strike-off method wherein a layer of concrete is deposited on the underlying material, consolidated, and struck to the indicated elevation of the steel reinforcement. The reinforcement shall be laid upon the prestruck surface, and the remaining concrete shall then be placed and finished in the required manner. When placement of the second lift causes the steel to be displaced horizontally from its original position, provisions shall be made for increasing the thickness of the first lift and depressing the reinforcement into the unhardened concrete to the required elevation. The increase in thickness shall be only as necessary to permit correct horizontal alignment to be maintained. Any portions of the bottom layer of concrete that have been placed more than 30 minutes without being covered with the top layer shall be removed and replaced with newly mixed concrete without additional cost to the Government. For pavements less than 12 inches thick, the reinforcement shall be positioned on suitable chairs securely fastened to the subgrade prior to concrete placement. Concrete shall be vibrated after the steel has been placed. Regardless of placement procedure, the reinforcing steel shall be free from coatings which could impair bond between the steel and concrete, and laps in the reinforcement shall be as indicated. In lieu of the above, automatic reinforcement depressing attachments may be used to position the reinforcement, either bar mats or welded wire fabric, provided the entire operation is approved by the Contracting Officer. Regardless of the equipment or procedures used for installing reinforcement, the Contractor shall ensure that the entire depth of concrete is adequately consolidated.

3.5.8 Placing Dowels and Tie Bars

The method used in installing and holding dowels in position shall ensure

that the error in alignment of any dowel from its required alignment after the pavement has been completed will not be greater than 1/8 in. per ft. Except as otherwise specified below, location of dowels shall be within a horizontal tolerance of plus or minus 5/8 inch. The Contractor shall furnish an approved template for checking the alignment and position of the dowels. The portion of each dowel intended to move within the concrete or expansion cap shall be painted with one coat of the specified paint. When dry, the painted portion shall be wiped clean and coated with a thin, even film of lubricating oil before the concrete is placed. Pipe used as dowels shall be filled with a stiff sand-asphalt mixture or portland-cement mortar. Dowels and tie bars in joints shall be omitted when the center of the dowel or tie bar is located within a horizontal distance from an intersecting joint equal to or less than one-fourth of the slab thickness. Dowels shall be installed as specified in the following subparagraphs.

3.5.8.1 Contraction Joints

Dowels and tie bars in longitudinal and transverse contraction joints within the paving lane shall be held securely in place, as indicated, by means of rigid metal frames or basket assemblies of an approved type. The assemblies shall consist of a framework of metal bars or wires arranged to provide rigid support for the dowels and the tie bars throughout the paving operation, with a minimum of four continuous bars or wires extending along the joint line. The dowels and tie bars shall be welded to the assembly or held firmly by mechanical locking arrangements that will prevent them from rising, sliding out, or becoming distorted during paving operations. The basket assemblies shall be held securely in the proper location by means of suitable pins or anchors. At the Contractor's option, in lieu of the above, dowels and tie bars in contraction joints shall be installed near the front of the paver by insertion into the plastic concrete using approved equipment and procedures. Approval will be based on the results of a preconstruction demonstration which the Contractor shall conduct, showing that the dowels and tie bars are installed within specified tolerances.

3.5.8.2 Construction Joints-Fixed Form Paving

Installation of dowels and tie bars shall be by the bonded-in-place method. Installation by removing and replacing in preformed holes will not be permitted. Dowels and tie bars shall be prepared and placed across joints where indicated, correctly aligned, and securely held in the proper horizontal and vertical position during placing and finishing operations, by means of devices fastened to the forms. The spacing of dowels and tie bars in construction joints shall be as indicated, except that, where the planned spacing cannot be maintained because of form length or interference with form braces, closer spacing with additional dowels or tie bars shall be used.

3.5.8.3 Dowels Installed in Hardened Concrete

Dowels installed in hardened concrete, such as in longitudinal construction joints for slipform paving, in joints between new and existing pavement, and similar locations, shall be installed by bonding the dowels into holes drilled into the hardened concrete. The installation of dowels in longitudinal construction joints by dowel inserters attached to a slipform paver or by any other means of inserting the dowels into the plastic concrete shall not be permitted. However, when paving two lanes together with a longitudinal contraction joint between, any dowels required may be installed in this joint with an approved inserter. Holes approximately 1/8

inch greater in diameter than the dowels shall be drilled into the hardened concrete with rotary core drills to receive the dowels. In lieu of rotary drills, the contractor may use percussion drills, provided that spalling at the collar of the hole does not occur. Regardless of the type of drill used, the drill shall be held rigidly in exact alignment by means of a stable jig or framework, solidly supported; gang drills meeting this are acceptable. Any damage to the concrete face during drilling shall be repaired as directed; continuing damage shall require modification of the equipment and operation. Dowels shall be bonded in the drilled holes using epoxy resin. Epoxy resin shall be injected at the back of the hole before installing the dowel and extruded to the collar during insertion of the dowel so as to completely fill the void around the dowel. Application by buttering the dowel shall not be permitted. The dowels shall be held in alignment at the collar of the hole, after insertion and before the grout hardens, by means of a suitable metal or plastic collar fitted around the dowel. The vertical alignment of the dowels shall be checked by placing a straightedge on the surface of the pavement over the top of the dowel and measuring the vertical distance between the straightedge and the beginning and ending point of the exposed part of the dowel. The horizontal alignment shall be checked with a framing square. Dowels required to be installed in any joints between new and existing concrete shall be grouted in holes drilled in the existing concrete, all as specified above. Where tie bars are required in longitudinal construction joints of slipform pavement, bent tie bars shall be installed at the paver, in front of the transverse screed or extrusion plate. If tie bars are required, a standard keyway shall be constructed, and the bent tie bars shall be inserted into the plastic concrete through a 26 gauge thick metal keyway liner. Tie bars shall not be installed in preformed holes. The keyway liner shall be protected and shall remain in place and become part of the joint. When bending tie bars, the radius of bend shall not be less than the minimum recommended for the particular grade of steel in the appropriate material standard. Before placement of the adjoining paving lane, the tie bars shall be straightened, using procedures which will not spall the concrete around the bar.

3.5.8.4 Expansion Joints

Dowels in expansion joints shall be installed as shown using appropriate procedures specified above.

3.6 FINISHING

The finishing machine, or paver-finisher, shall meet all requirements specified in paragraph EQUIPMENT and herein. Finishing operations shall be a continuing part of placing operations starting immediately behind the strike-off of the paver and the machines shall be designed and operated to strike off, screed, and consolidate the concrete. Initial finishing shall be provided by the transverse screed or extrusion plate. The sequence of operations shall be transverse finishing, longitudinal machine floating if used, straightedge finishing, texturing, and then edging of joints. Finishing shall be by the machine method. The hand method shall be used only infrequently and only on isolated areas of odd slab widths or shapes and in the event of a breakdown of the mechanical finishing equipment. When approved, the hand finishing method may also be used for separate, isolated slabs during removal and replacement type repair operations. Supplemental hand finishing for machine finished pavement shall be kept to an absolute minimum. Equipment to be used for supplemental hand finishing shall primarily be 10 to 12 feet cutting straightedges; only very sparing use of bull floats shall be allowed. Any machine finishing operation which

requires appreciable hand finishing, other than a moderate amount of straightedge finishing, shall be immediately stopped and proper adjustments made or the equipment replaced. Every effort shall be made to prevent bringing excess paste to the surface and any operations which produce more than 3/32 inch of paste (mortar, water, laitance, etc.) over the top layer of coarse aggregate shall be halted immediately and the equipment, mixture, or procedures modified as necessary. Compensation shall be made for surging behind the screeds or extrusion plate and settlement during hardening and care shall be taken to ensure that paving and finishing machines are properly adjusted so that the finished surface of the concrete (not just the cutting edges of the screeds) will be at the required line and grade. Surface checks shall be made regularly and paving operations immediately halted and adjustments made whenever compensation is inadequate. Screed and float adjustments of the machines shall be checked at the start of each day's paving operations and more often if required. Machines that cause frequent delays due to mechanical failure shall be replaced. When machines ride the edge of a previously constructed slab, the edge shall be kept clean and provision shall be made to protect the surface of the slab. Clary screeds, "bridge deck" finishers, or other rotating pipe or tube type equipment will not be permitted. Finishing equipment and tools shall be maintained clean and in an approved condition. At no time shall water be added to the surface of the slab with the finishing equipment or tools, or in any other way, except for fog (mist) sprays specified to prevent plastic shrinkage cracking.

3.6.1 Longitudinal Floating

When the equipment contains a mechanical, longitudinal, oscillating float, the float shall be operated to smooth and finish the pavement immediately behind the transverse screed or extrusion plate. The float shall be operated maintaining contact with the surface at all times. Care shall be taken to prevent working paste to the surface in excess of the amount specified above.

3.6.2 Other Types of Finishing Equipment

*1

Concrete finishing equipment of types other than those specified above may be used on a trial basis, when specifically approved, except that rotating pipe or tubes or bridge deck finishers that do not meet specifications in paragraph 1.14.5.5 will not be permitted. Approval will be given after demonstration on a test section prior to start of construction, and provided the Contracting Officer determines that the pavement produced is better than that produced by the specified equipment. The use of equipment that fails to produce finished concrete of the required quality, using concrete proportions and slump as specified, shall be discontinued, and the concrete shall be finished with specified equipment and in the manner specified above. ~~Vibrating screeds or pans shall be used only for isolated slabs where hand finishing is permitted as specified, and only where specifically approved.~~ Slipform paving equipment shall not be operated on fixed forms unless approved in writing prior to use.

3.6.3 Machine Finishing With Fixed Forms

The machine shall be designed to ride the forms and shall be operated to screed and consolidate the concrete. Machines that cause displacement of the forms shall be replaced. The machine shall make only one pass over each area of pavement. If the equipment and procedures do not produce a surface of uniform texture, true to grade, in one pass, the operation shall be immediately stopped and the equipment, mixture, and procedures adjusted

as necessary.

3.6.4 Machine Finishing With Slipform Pavers

The slipform paver shall be operated so that only a very minimum of additional finishing work is required to produce pavement surfaces and edges meeting the specified tolerances. Any equipment or procedure that fails to meet these specified requirements shall immediately be replaced or modified as necessary. A self-propelled nonrotating pipe float may be used if the Contractor desires while the concrete is still plastic, to remove minor irregularities and score marks. The pipe float shall be 6 to 10 inches in diameter and sufficiently long to span the full paving width when oriented at an angle of approximately 60 degrees with the center line. Only one pass of the pipe float shall be allowed. If there is sufficient concrete slurry or fluid paste on the surface that it runs over the edge of the pavement, the paving operation shall be immediately stopped and the equipment, mixture, or operation modified to prevent formation of such slurry. Any slurry which does run down the vertical edges shall be immediately removed by hand, using stiff brushes or scrapers. No slurry, concrete or concrete mortar shall be used to build up along the edges of the pavement to compensate for excessive edge slump, either while the concrete is plastic or after it hardens. Slabs having areas of edge slump in excess of the specified tolerances shall be removed and replaced in accordance with paragraph, REPAIR, REMOVAL, REPLACEMENT OF SLABS; repair operations on such areas will not be permitted.

3.6.5 Surface Correction and Testing

After all other finishing is completed but while the concrete is still plastic, minor irregularities and score marks in the pavement surface shall be eliminated by means of cutting straightedges. Such straightedges shall be 12 feet in length and shall be operated from the sides of the pavement and from bridges. A straightedge operated from the side of the pavement shall be equipped with a handle 3 feet longer than one-half the width of the pavement. The surface shall then be tested for trueness with a straightedge held in successive positions parallel and at right angles to the center line of the pavement, and the whole area covered as necessary to detect variations. The straightedge shall be advanced along the pavement in successive stages of not more than one-half the length of the straightedge. Depressions shall be immediately filled with freshly mixed concrete, struck off, consolidated, and refinished. Projections above the required elevation shall also be struck off and refinished. The straightedge testing and finishing shall continue until the entire surface of the concrete is free from observable departure from the straightedge and conforms to the surface requirements specified in paragraph ACCEPTABILITY OF WORK AND PAYMENT ADJUSTMENTS. Long-handled, flat bull floats shall be used very sparingly and only as necessary to correct minor, scattered surface defects. If frequent use of bull floats is necessary, the paving operation shall be stopped and the equipment, mixture or procedures adjusted to eliminate the surface defects. Finishing with hand floats and trowels shall be held to the absolute minimum necessary. Extreme care shall be taken to prevent overfinishing joints and edges. The surface finish of the pavement shall be produced essentially by the finishing machine and not by subsequent hand finishing operations. All hand finishing operations shall be subject to approval and shall be modified when directed. No water shall be added to the pavement surface during these operations.

3.6.6 Hand Finishing

Hand finishing operations shall be used only as specified above.

3.6.6.1 Equipment

In addition to approved mechanical internal vibrators for consolidating the concrete, a strike-off and tamping template and a longitudinal float shall be provided for hand finishing. The template shall be at least 1 foot longer than the width of pavement being finished, of an approved design, and sufficiently rigid to retain its shape, and shall be constructed of metal or other suitable material shod with metal. The longitudinal float shall be at least 10 feet long, of approved design, and rigid and substantially braced, and shall maintain a plane surface on the bottom . Grate tampers (jitterbugs) shall not be used.

3.6.6.2 Finishing and Floating

As soon as placed and vibrated, the concrete shall be struck off and screeded to the crown and cross section and to such elevation above grade that when consolidated and finished, the surface of the pavement will be at the required elevation. In addition to previously specified complete coverage with handheld immersion vibrators, the entire surface shall be tamped with the strike-off and tamping template, and the tamping operation continued until the required compaction and reduction of internal and surface voids are accomplished (grate tampers shall not be used). Immediately following the final tamping of the surface, the pavement shall be floated longitudinally from bridges resting on the side forms and spanning but not touching the concrete. If necessary, additional concrete shall be placed and screeded, and the float operated until a satisfactory surface has been produced. The floating operation shall be advanced not more than half the length of the float and then continued over the new and previously floated surfaces. Long-handled, flat bull floats shall be used very sparingly and only as necessary to correct minor, scattered surface defects. If frequent use of bull floats is necessary, the operation shall be stopped and adjusted to eliminate the surface defects. Finishing with hand floats and trowels shall be held to the absolute minimum necessary. Extreme care shall be taken to prevent overfinishing joints and edges. No water shall be added to the pavement during finishing operations.

3.6.7 Texturing

Before the surface sheen has disappeared and before the concrete hardens, the surface of the pavement shall be given a texture as described herein. After curing is complete, all textured surfaces shall be thoroughly power broomed to remove all debris. Any type of transverse texturing shall produce grooves in straight lines across each lane within a tolerance of plus or minus 1/2 inch of a true line.

3.6.7.1 Fabric Drag Surface Finish

Surface texture shall be applied by dragging the surface of the pavement, in the direction of the concrete placement, with an approved fabric drag. The drag shall be operated with the fabric moist, and the fabric shall be cleaned or changed as required to keep clean. The dragging shall be done so as to produce a uniform finished surface having a fine sandy texture without disfiguring marks.

3.6.8 Edging

After texturing has been completed, the edge of the slabs along the forms, along the edges of slipformed lanes, and at the joints shall be carefully finished with an edging tool to form a smooth rounded surface of 1/8 inch radius. Tool marks shall be eliminated, and the edges shall be smooth and true to line. No water shall be added to the surface during edging. Extreme care shall be taken to prevent overworking the concrete.

3.6.9 Outlets in Pavement

Recesses for the tie-down anchors, lighting fixtures, and other outlets in the pavement shall be constructed to conform to the details and dimensions shown. The concrete in these areas shall be carefully finished to provide a surface of the same texture as the surrounding area that will be within the requirements for plan grade and surface smoothness.

3.7 CURING

3.7.1 Protection of Concrete

Concrete shall be continuously protected against loss of moisture and rapid temperature changes for at least 7 days from the completion of finishing operations. Unhardened concrete shall be protected from rain and flowing water. All equipment needed for adequate curing and protection of the concrete shall be on hand and ready for use before actual concrete placement begins. Sufficient sheet material to protect unhardened concrete from rain shall be at the paver at all times. Protection shall be provided as necessary to prevent cracking of the pavement due to temperature changes during the curing period. If any selected method of curing does not afford the proper curing and protection against concrete cracking, the damaged pavement shall be removed and replaced, and another method of curing shall be employed as directed. Curing shall be accomplished by one of the following methods.

3.7.2 Membrane Curing

A uniform coating of white-pigmented, membrane-forming, curing compound shall be applied to the entire exposed surface of the concrete as soon as the free water has disappeared from the surface after finishing. If evaporation is high and no moisture is present on the surface even though bleeding has not stopped, fog sprays shall be used to keep the surface moist until setting of the cement occurs and bleeding is complete. Curing compound shall then be immediately applied. Along the formed edge faces, it shall be applied immediately after the forms are removed. Concrete shall not be allowed to dry before the application of the membrane. If any drying has occurred, the surface of the concrete shall be moistened with a fine spray of water, and the curing compound applied as soon as the free water disappears. The curing compound shall be applied to the finished surfaces by means of an approved automatic spraying machine. The spraying machine shall be self-propelled and shall span the newly paved lane. The machine shall have one or more spraying nozzles that can be controlled and operated to completely and uniformly cover the pavement surface with the required amount of curing compound. The curing compound in the drum used for the spraying operation shall be thoroughly and continuously agitated mechanically throughout the full depth of the drum during the application. Air agitation may be used only to supplement mechanical agitation. Spraying pressure shall be sufficient to produce a fine spray as necessary to cover the surface thoroughly and completely with a uniform film. Spray equipment shall be kept clean and properly maintained and the spray nozzle or nozzles shall have adequate wind shields. The curing compound shall be

applied with an overlapping coverage that will give a two-coat application at a coverage of 400 square feet per gallon, plus or minus 5.0 percent for each coat. A one-coat application may be applied provided a uniform application and coverage of 200 square feet per gallon, plus or minus 5.0 percent is obtained. The application of curing compound by hand-operated, mechanical powered pressure sprayers will be permitted only on odd widths or shapes of slabs where indicated and on concrete surfaces exposed by the removal of forms. When the application is made by hand-operated sprayers, the second coat shall be applied in a direction approximately at right angles to the direction of the first coat. The compound shall form a uniform, continuous, cohesive film that will not check, crack, or peel and that will be free from pinholes and other discontinuities. If pinholes, abrasions, or other discontinuities exist, an additional coat shall be applied to the affected areas within 30 minutes. Concrete surfaces that are subjected to heavy rainfall within 3 hours after the curing compound has been applied shall be resprayed by the method and at the coverage specified above. Areas where the curing compound is damaged by subsequent construction operations within the curing period shall be immediately resprayed. The surfaces adjacent to joint sawcuts shall be cleaned and resprayed with curing compound immediately after cutting. Approved standby facilities for curing concrete pavement shall be provided at an accessible location at the job site for use in the event of mechanical failure of the spraying equipment or other conditions that might prevent correct application of the membrane-curing compound at the proper time. Concrete surfaces to which membrane-curing compounds have been applied shall be adequately protected during the entire curing period from pedestrian and vehicular traffic, except as required for joint-sawing operations and surface tests, and from any other possible damage to the continuity of the membrane.

3.7.3 Moist Curing

Concrete to be moist-cured shall be maintained continuously wet for the entire curing period, or until curing compound is applied, commencing immediately after finishing. If forms are removed before the end of the curing period, curing shall be carried out as on unformed surfaces, using suitable materials. Surfaces shall be cured by ponding, by continuous sprinkling, by continuously saturated burlap or cotton mats, or by continuously saturated plastic coated burlap. Burlap and mats shall be clean and free from any contamination and shall be completely saturated before being placed on the concrete. The Contractor shall have an approved work system to ensure that moist curing is continuous 24 hours per day and that the entire surface is wet.

3.7.4 Impervious Sheet Curing

All surfaces shall be thoroughly wetted and then completely covered with the sheeting. Sheeting shall be at least 18 inches wider than the concrete surface to be covered. Covering shall be laid with light-colored side up. Covering shall be lapped not less than 12 inches and securely weighted to prevent displacement so that it remains in contact with the concrete during the specified length of curing. Coverings shall be folded down over exposed edges of slabs and secured by approved means. Sheets shall be immediately repaired or replaced if tears of holes appear during the curing period.

3.8 JOINTS

3.8.1 General Requirements for Joints

Joints shall conform to the details indicated and shall be perpendicular to the finished grade of the pavement. All joints shall be straight and continuous from edge to edge or end to end of the pavement with no abrupt offset and no gradual deviation greater than 1/2 inch.Before commencing construction, the Contractor shall submit for approval a control plan and equipment to be used for ensuring that all joints are straight from edge to edge of the pavement within the above tolerances. Where any joint fails to meet these tolerances, the slabs adjacent to the joint shall be removed and replaced at no additional cost to the Government. No change from the jointing pattern shown on the drawings shall be made without written approval of the Contracting Officer. Sealing of joints shall be in accordance with Section 02762A COMPRESSION JOINT SEALS FOR CONCRETE PAVEMENTS.

3.8.2 Longitudinal Construction Joints

Longitudinal construction joints between paving lanes shall be located as indicated. Dowels or tie bars shall be installed in the longitudinal construction joints, or the edges shall be thickened as indicated. Dowels or tie bars shall be installed in conformance with paragraph, Placing Dowels and Tie Bars. After the end of the curing period, longitudinal construction joints shall be sawed to provide a groove at the top for sealant conforming to the details and dimensions indicated.

3.8.3 Transverse Construction Joints

Transverse construction joints shall be installed at the end of each day's placing operations and at any other points within a paving lane when concrete placement is interrupted for 30 minutes or longer. When concrete placement cannot be continued, the transverse construction joint shall be installed at a planned transverse joint, if possible. Transverse construction joints shall be constructed by utilizing headers and the very minimum amount of hand placement and finishing techniques. Pavement shall be constructed with the paver as close to the header as possible, and the paver shall be run out completely past the header. Transverse construction joints installed at a planned transverse joint shall be constructed as shown or, if not shown otherwise, shall be dowelled. Those not at a planned transverse joint shall be constructed with tie bars and shall not be sawed or sealed.

3.8.4 Expansion Joints

Expansion joints shall be formed where indicated, and about any structures and features that project through or into the pavement, using joint filler of the type, thickness, and width indicated, and shall be installed to form a complete, uniform separation between the structure and the pavement. The filler shall be attached to the original concrete placement with adhesive or other fasteners and shall extend the full slab depth. Adjacent sections of filler shall be fitted tightly together, and the filler shall extend across the full width of the paving lane or other complete distance in order to prevent entrance of concrete into the expansion space. Edges of the concrete at the joint face shall be finished with an edger with a radius of 1/8 inch. The joint filler strips shall be installed 3/4 inch below the pavement surface with a slightly tapered, dressed-and-oiled wood strip or other approved material temporarily secured to the top of the filler to form a recess to be filled with joint sealant. The wood strip shall be removed soon after the concrete has set and the reservoir temporarily filled with an approved material to protect the reservoir until

the joint sealer is installed.

3.8.5 Slip Joints

Slip joints shall be installed where indicated using the specified materials. Preformed joint filler material shall be attached to the face of the original concrete placement with adhesive or other fasteners. Bituminous material shall be applied to cover the entire surface of the face of the original concrete placement to a depth of 1/4 inch plus or minus 1/16 inch. Only a material which will remain in place on the vertical surface shall be used. In each case a 3/4 inch deep reservoir for joint sealant shall be constructed at the top of the joint. Edges of the joint face shall be finished with an edger with a radius of 1/8 inch.

3.8.6 Contraction Joints

Transverse and longitudinal contraction joints shall be of the weakened-plane or dummy type and shall be constructed as indicated. Longitudinal contraction joints shall be constructed by sawing a groove in the hardened concrete with a power-driven saw in conformance with requirements for sawed joints, unless otherwise approved in writing. Transverse contraction joints shall be constructed in conformance with requirements for sawed joints.

3.8.6.1 Sawed Joints

Sawed contraction joints shall be constructed by sawing an initial groove in the concrete with a 1/8 inch blade to the indicated depth. During sawing of joints, and again 24 hours later, the CQC team shall inspect all exposed lane edges for development of cracks below the saw cut, and shall immediately report results to the Contracting Officer. If the Contracting Officer determines that there are more uncracked joints than desired, the Contractor will be directed to saw succeeding joints 25 percent deeper than originally indicated at no additional cost to the Government. After expiration of the curing period, the upper portion of the groove shall be widened by sawing to the width and depth indicated for the joint sealer. The time of initial sawing shall vary depending on existing and anticipated weather conditions and shall be such as to prevent uncontrolled cracking of the pavement. Sawing of the joints shall commence as soon as the concrete has hardened sufficiently to permit cutting the concrete without chipping, spalling, or tearing. The sawed faces of joints will be inspected for undercutting or washing of the concrete due to the early sawing, and sawing shall be delayed if undercutting is sufficiently deep to cause structural weakness or excessive roughness in the joint. The sawing operation shall be carried on as required during both day and night regardless of weather conditions. The joints shall be sawed at the required spacing consecutively in the sequence of the concrete placement. A chalk line or other suitable guide shall be used to mark the alinement of the joint. Before sawing a joint, the concrete shall be examined closely for cracks, and the joint shall not be sawed if a crack has occurred near the planned joint location. Sawing shall be discontinued when a crack develops ahead of the saw cut. Workmen and inspectors shall wear clean, rubber-soled footwear, and the number of persons walking on the pavement shall be limited to those actually performing the sawing operation. Immediately after the joint is sawed, the saw cut and adjacent concrete surface shall be thoroughly flushed with water until all waste from sawing is removed from the joint. The surface shall be resprayed with curing compound as soon as free water disappears. Necessary precautions shall be taken to insure that the concrete is properly cured at sawed joints, but that no

curing compound enters the joints. The top of the joint opening and the joint groove at exposed edges shall be tightly sealed with cord, backer rod, or other approved material before the concrete in the region of the joint is resprayed with curing compound. The method used for sealing the joint groove shall prevent loss of moisture from the joint during the entire specified curing period and shall prevent infiltration of foreign material until removed immediately before sawing joint sealant reservoir. The sawing equipment shall be adequate in the number of units and the power to complete the sawing at the required rate. An ample supply of saw blades shall be available on the job before concrete placement is started and at all times during sawing. At least one standby sawing unit in good working order shall be available at the jobsite at all times during the sawing operation.

3.8.7 Thickened Edge Joints

Thickened edge joints shall be constructed as indicated on the drawings. Underlying material in the transition area shall be graded as shown and shall meet the requirements for smoothness and compaction specified for all other areas of the underlying material.

3.8.8 Omitted

3.8.9 Sealing Joints

Joints shall be sealed immediately following curing of the concrete or as soon thereafter as weather conditions permit. Joints shall be sealed as specified in Section 02762A COMPRESSION JOINT SEALS FOR CONCRETE PAVEMENTS.

3.9 REPAIR, REMOVAL, REPLACEMENT OF SLABS

3.9.1 General Criteria

New pavement slabs that are broken or contain cracks shall be removed and replaced or repaired, as specified hereinafter at no cost to the Government. Spalls along joints shall be repaired as specified. Where removal of partial slabs is permitted, as specified, removal and replacement shall be full depth, shall be full width of the paving lane, and the limit of removal shall be normal to the paving lane and not less than 10 feet from each original transverse joint (i.e., removal portion shall be at least 10 feet longitudinally, and portion to remain in place shall be at least longitudinally; thus, if original slab length is less than 20 feet, the entire slab shall be removed). The Contracting Officer will determine whether cracks extend full depth of the pavement and may require cores to be drilled on the crack to determine depth of cracking. Such cores shall be at least 6 inch diameter, shall be drilled by the Contractor and shall be filled by the Contractor with a well consolidated concrete mixture bonded to the walls of the hole with epoxy resin, using approved procedures. Drilling of cores and refilling holes shall be at no expense to the Government. All epoxy resin used in this work shall conform to paragraph EPOXY RESIN, Type and Grade as specified.

3.9.2 Slabs with Cracks Thru Interior Areas

Interior area is defined as that area more than 24 inches from either adjacent original transverse joint. Slabs with any cracks that extend into the interior area, regardless of direction, shall be treated by one of the following procedures.

3.9.2.1 Cracks That Do Not Extend Full Depth of Slab

These cracks, and similar cracks within the areas 24 inches each side of transverse joints, shall be cleaned and then pressure injected with epoxy resin, Type IV, Grade 1, using procedures as approved. The procedure shall not widen the crack during epoxy resin injection. All epoxy resin injection shall take place in the presence of a representative of the Contracting Officer.

3.9.2.2 Cracks That Extend Full Depth of Slab

Where there is any full depth crack at any place within the interior area, the full slab shall be removed. However, if the cracked area all lies within 10 feet of one original transverse joint, only a partial slab need be removed provided all criteria specified above for distance from each original transverse joint is met.

3.9.3 Cracks close to and Parallel to Transverse Joints

All cracks essentially parallel to original transverse joints, extending full depth of the slab, and lying wholly within 24 incheseither side of the joint shall be treated as specified hereinafter. Any crack extending more than 24 inches from the transverse joint shall be treated as specified above for Slabs With Cracks Through Interior Areas. Any cracks which do not extend full depth of the slab shall be treated as specified above in subparagraph, Cracks That Do Not Extend Full Depth Of Slab, and the original transverse joint constructed as originally designed.

3.9.3.1 Full Depth Cracks Present, Original Joint Not Opened

When the original transverse joint has not opened, the crack shall be routed and sealed, and the original transverse joint filled with epoxy resin. The crack shall be routed with an easily guided, wheel mounted, vertical shaft, powered rotary router designed so the routing spindle will caster as it moves along the crack, or with a small diameter saw designed for this use. The reservoir for joint sealant in the crack shall be formed by routing to a depth of 3/4 inch,plus or minus 1/16 inch, and to a width of 5/8 inch, plus or minus 1/8 inch. Any equipment or procedure which causes ravelling or spalling along the crack shall be modified or replaced to prevent such ravelling or spalling. The joint sealant shall be a liquid sealant as specified for rigid pavement joints. Installation of joint seal shall be as specified for sealing joints or as directed. The uncracked transverse joint shall be filled with epoxy resin. If the joint sealant reservoir has been sawed out, the reservoir and as much of the lower saw cut as possible shall be filled with epoxy resin, Type IV, Grade 2, thoroughly tooled into the void using approved procedures. If only the original narrow saw cut has been made, it shall be cleaned and pressure injected with epoxy resin, Type IV, Grade 1, using approved procedures. If filler material (joint insert) has been used to form a weakened plane in the transverse joint, it shall be completely sawed out and the saw cut pressure injected with epoxy resin, Type IV, Grade 1, using approved procedures. Where a parallel crack goes part way across the paving lane and then intersects and follows the original transverse joint which is cracked only for the remainder of the width, it shall be treated as follows: The area with the separate crack shall be treated as specified above for a parallel crack, and the cracked original joint shall be prepared and sealed as originally designed.

3.9.3.2 Full Depth Cracks, Original Joint Also Cracked

At a transverse joint, if there is any place in the lane width where a parallel crack and a cracked portion of the original joint overlap, a section of the slab containing the crack shall be removed and replaced for the full lane width and at least 10 feet long. If this partial slab removal places the limit of removal less than 10 feet from the next transverse joint, the entire slab shall be removed. If the parallel crack crosses the transverse joint line, a similar area shall be removed and replaced in both slabs.

3.9.4 Removal and Replacement of Full Slabs

Where it is necessary to remove full slabs, unless there are keys or dowels present, all edges of the slab shall be cut full depth with a concrete saw. All saw cuts shall be perpendicular to the slab surface. If keys, dowels, or tie bars are present along any edges, these edges shall be sawed full depth 6 inches from the edge if only keys are present, or just beyond the end of dowels or tie bars if they are present. These joints shall then be carefully sawed on the joint line to within 1 inch of the depth of the dowel or key. The main slab shall be further divided by sawing full depth, at appropriate locations, and each piece lifted out and removed. Suitable equipment shall be used to provide a truly vertical lift, and approved safe lifting devices used for attachment to the slabs. The narrow strips along keyed or doweled edges shall be carefully broken up and removed using light, hand-held jackhammers, 30 lb or less, or other approved similar equipment. Care shall be taken to prevent damage to the dowels, tie bars, or keys or to concrete to remain in place. The joint face below keys or dowels shall be suitably trimmed so that there is no abrupt offset in any direction greater than 1/2 inch and no gradual offset greater than 1 inch when tested in a horizontal direction with a straightedge. No mechanical impact breakers, other than the above hand-held equipment shall be used for any removal of slabs. If underbreak between 1-1/2 and 4 inches deep occurs at any point along any edge, the area shall be repaired as directed before replacing the removed slab. Procedures directed will be similar to those specified for surface spalls, modified as necessary. If underbreak over 4 inches deep occurs, the entire slab containing the underbreak shall be removed and replaced. Where there are no dowels, tie bars, or keys on an edge, or where they have been damaged, dowels of the size and spacing as specified for other joints in similar pavement shall be installed by epoxy grouting them into holes drilled into the existing concrete using procedures as specified in paragraph, Placing Dowels and Tie Bars. Original damaged dowels or tie bars shall be cut off flush with the joint face. Protruding portions of dowels shall be painted and lightly oiled. All four edges of the new slab shall thus contain dowels or original keys or original tie bars. Placement of concrete shall be as specified for original construction. Prior to placement of new concrete, the underlying material shall be recompacted and shaped as specified in the appropriate section of these specifications, and the surfaces of all four joint faces shall be cleaned of all loose material and contaminants and coated with a double application of membrane forming curing compound as bond breaker. Care shall be taken to prevent any curing compound from contacting dowels or tie bars. The resulting joints around the new slab shall be prepared and sealed as specified for original construction.

3.9.5 Removal and Replacement of Partial Slabs

Where the above criteria permits removal of partial slabs, removal and replacement operations shall be as specified for full slabs, except that the joint between the removed area and the partial slab to remain in place

shall consist of a full depth saw cut across the full lane width and perpendicular to the centerline of the paving lane. Replacement operations shall be the same as specified above, except that, at the joint between the removed area and the partial slab to remain, deformed tie bars shall be epoxy resin grouted into holes drilled into the slab to remain in place. Size and spacing of the tie bars shall be as specified for dowels. Drilling of holes and installation of tie bars shall be as specified for dowels in paragraph, Placing Dowels and Tie Bars, except that no portion of the tie bars shall be painted or oiled. No curing compound shall be used on this joint face and, immediately before placing new concrete, the joint surface of the partial slab remaining in place shall be coated with epoxy resin, Type V, Grade 2.

3.9.6 Repairing Spalls Along Joints

Where directed, spalls along joints of new slabs, along edges of adjacent existing concrete, and along parallel cracks shall be repaired by first making a vertical saw cut at least 1 inch outside the spalled area and to a depth of at least 2 inches. Saw cuts shall be straight lines forming rectangular areas. The concrete between the saw cut and the joint, or crack, shall be chipped out to remove all unsound concrete and at least a depth of 1/2 inch of visually sound concrete. The cavity thus formed shall be thoroughly cleaned with high pressure water jets supplemented with compressed air to remove all loose material. Immediately before filling the cavity, a prime coat shall be applied to the dry cleaned surface of all sides and bottom of the cavity, except any joint face. The prime coat shall be applied in a thin coating and scrubbed into the surface with a stiff-bristle brush. Prime coat for portland cement repairs shall be a neat cement grout and for epoxy resin repairs shall be epoxy resin, Type III, Grade 1. The cavity shall be filled with low slump portland cement concrete or mortar or with epoxy resin concrete or mortar. Portland cement concrete shall be used for larger spalls, those more than 1/3 cu. ft. in size after removal operations; portland cement mortar shall be used for spalls between 0.03 cu. ft. and 1/3 cu. ft.; and epoxy resin mortar or Type III, Grade 3 epoxy resin for those spalls less than 0.03 cu. ft.in size after removal operations. Portland cement concretes and mortars shall be very low slump mixtures, 1/2 inch slump or less, proportioned, mixed, placed, consolidated by tamping, and cured, all as directed.

3.10 EXISTING CONCRETE PAVEMENT REMOVAL AND REPAIR

Existing concrete pavement shall be removed as indicated and as specified in Section 02220A DEMOLITION, modified, and expanded as specified herein. Repairs shall be made as indicated and as specified herein. All operations shall be carefully controlled to prevent damage to the concrete pavement and to the underlying material to remain in place. All saw cuts shall be made perpendicular to the slab surface, and forming rectangular areas.

3.10.1 Removal of Existing Pavement Slab

When existing concrete pavement is to be removed and adjacent concrete is to be left in place, the joint between the removal area and adjoining pavement to stay in place, including dowels, tie bars or keys, shall first be cut full depth with a standard diamond-type concrete saw. Next, a full depth saw cut shall be made parallel to the joint at least 24 inches from the joint and at least 6 inches from the end of any dowels. This saw cut shall be made with a wheel saw as specified in paragraph SAWING EQUIPMENT. All pavement to be removed beyond this last saw cut shall be removed using equipment and procedures specified in Section 02220A DEMOLITION and as

approved. All pavement between this last saw cut and the joint line shall be removed by carefully pulling pieces and blocks away from the joint face with suitable equipment and then picking them up for removal. In lieu of this method, this strip of concrete may be carefully broken up and removed using hand-held jackhammers, 30 lb or less, or other approved light-duty equipment which will not cause stress to propagate across the joint saw cut and cause distress in the pavement which is to remain in place. In lieu of the above specified removal method, the slab may be sawcut full depth to divide it into several pieces and each piece lifted out and removed. Suitable equipment shall be used to provide a truly vertical lift, and safe lifting devices used for attachment to the slab. Where dowels or keys are present, care shall be taken to produce an even, vertical joint face below the dowels or keys. This joint face shall be trimmed so that there is no abrupt offset in any direction greater than 1/2 inch and no gradual offset greater than 1 inch when tested in a horizontal direction with a straightedge. If the Contractor is unable to produce such a joint face, or if underbreak or other distress occurs, the Contractor shall saw the dowels or keys flush with the joint. The Contractor shall then install new dowels, of the size and spacing used for other similar joints, by epoxy resin bonding them in holes drilled in the joint face as specified in paragraph, Placing dowels and Tie-bars. All this shall be at no additional cost to the Government.

3.10.2 Edge Repair

The edge of existing concrete pavement against which new pavement abuts shall be protected from damage at all times. Areas which are damaged during construction shall be repaired at no cost to the Government; repair of previously existing damage areas will be considered a subsidiary part of concrete pavement construction.

3.10.2.1 Spall Repair

Spalls along joints and along cracks shall be repaired where indicated and where directed. Repair materials and procedures shall be as previously specified in subparagraph, Repairing Spalls Along Joints.

3.10.2.2 Underbreak Repair

All underbreak shall be repaired. First, all delaminated and loose material shall be carefully removed. Next, the underlying material shall be recompacted, without addition of any new material. Finally, the void shall be completely hand-filled with paving concrete mixture, thoroughly consolidated. Care shall be taken to produce an even joint face from top to bottom. Prior to placing concrete, the underlying material shall be thoroughly moistened. After placement, the exposed surface shall be heavily coated with curing compound. All this shall be done at least 24 hours before placing the new paving concrete against the joint.

3.10.2.3 Underlying Material

The underlying material adjacent to the edge of and under the existing pavement which is to remain in place shall be protected from damage or disturbance during removal operations and until placement of new concrete, and shall be shaped as shown on the drawings or as directed. Sufficient underling material shall be kept in place outside the joint line to completely prevent disturbance of material under the pavement which is to remain in place. Any material under the portion of the concrete pavement to remain in place which is disturbed or loses its compaction shall be

carefully removed and replaced with concrete as specified above under Underbreak Repair. The underlying material outside the joint line shall be thoroughly compacted and shall be moist when new concrete is placed.

3.11 PAVEMENT PROTECTION

The Contractor shall protect the pavement against all damage prior to final acceptance of the work by the Government. Aggregates rubble, or other similar construction materials shall not be piled on airfield pavements. Traffic shall be excluded from the new pavement by erecting and maintaining barricades and signs until the concrete is at least 14 days old, or for a longer period if so directed. As a construction expedient in paving intermediate lanes between newly paved pilot lanes, operation of the hauling equipment will be permitted on the new pavement after the pavement has been cured for 7 days and the joints have been sealed or otherwise protected. Also, the subgrade planer, concrete paving and finishing machines, and similar equipment may be permitted to ride upon the edges of previously constructed slabs when the concrete has attained a minimum flexural strength of 400 psi and approved means are furnished to prevent damage to the slab edge. All new and existing pavement carrying construction traffic or equipment shall be continuously kept completely clean, and spillage of concrete or other materials shall be cleaned up immediately upon occurrence. Special care shall be used where Contractor's traffic uses or crosses active airfield pavement. In these areas, if necessary in order to accomplish this, full-time workmen with hand brooms shall be used at anytime there is traffic. Other existing pavements used by the Contractor shall be power broomed at least daily when traffic operates. For fill-in lanes, equipment shall be used that will not damage or spall the edges or joints of the previously constructed pavement.

3.12 TESTING AND INSPECTION FOR CONTRACTOR QUALITY CONTROL

3.12.1 Testing and Inspection by Contractor

The Contractor shall perform the inspection and tests described below, and based upon the results of these inspections and tests, shall take the action required and submit reports as required. When, in the opinion of the Contracting Officer, the paving operation is out of control, concrete placement shall cease. The laboratory performing the tests shall be on-site and shall conform with ASTM C 1077. The individuals who sample and test concrete or the constituents of concrete as required in this specification shall have demonstrated a knowledge and ability to perform the necessary test procedures equivalent to the ACI minimum guidelines for certification of Concrete Field Testing Technicians, Grade I. The individuals who perform the inspection of concrete shall have demonstrated a knowledge and ability equivalent to the ACI minimum guidelines for certification of Concrete Construction Inspector, Level II. The Government will inspect the laboratory, equipment, and test procedures prior to start of concreting operations and at least once per year thereafter for conformance with ASTM C 1077. This testing shall be performed by the Contractor regardless of any other testing performed by the Government, either for pay adjustment purposes or for any other reason.

3.12.2 Testing and Inspection Requirements

3.12.2.1 Fine Aggregate

a. Grading. At least once during each shift when the concrete plant is operating, there shall be one sieve analysis and fineness

modulus determination in accordance with ASTM C 136 and COE CRD-C 104 for the fine aggregate or for each fine aggregate if it is batched in more than one size or classification. The location at which samples are taken may be selected by the Contractor as the most advantageous for control. However, the Contractor is responsible for delivering fine aggregate to the mixer within specification limits.

b. Corrective Action for Fine Aggregate Grading. When the amount passing on any sieve is outside the specification limits, the fine aggregate shall be immediately resampled and retested. If there is another failure on any sieve, the fact shall be immediately reported to the Contracting Officer, paving shall be stopped, and immediate steps taken to correct the grading.

3.12.2.2 Coarse Aggregate

a. Grading. At least once during each shift in which the concrete plant is operating, there shall be a sieve analysis in accordance with ASTM C 136 for each size of coarse aggregate. The location at which samples are taken may be selected by the Contractor as the most advantageous for production control. However, the Contractor shall be responsible for delivering the aggregate to the mixer within specification limits. A test record of samples of aggregate taken at the same locations shall show the results of the current test as well as the average results of the five most recent tests including the current test. The Contractor may adopt approved limits for control coarser than the specification limits for samples taken other than as delivered to the mixer to allow for degradation during handling.

b. Corrective Action for Grading. When the amount passing any sieve is outside the specification limits, the coarse aggregate shall be immediately resampled and retested. If the second sample fails on any sieve, that fact shall be reported to the Contracting Officer, and steps taken to correct the grading. Where two consecutive averages of 5 tests are outside specification limits, the operation shall be considered out of control and shall be reported to the Contracting Officer, paving shall be stopped, and immediate steps shall be taken to correct the grading.

3.12.2.3 Quality of Aggregates

Thirty days prior to the start of concrete placement, the Contractor shall perform all tests specified for aggregate quality, including deleterious materials. In addition, after the start of paving, the Contractor shall perform similar tests for aggregate quality at least once every month, and when the source of aggregate or aggregate quality changes. Testing interval may be increased to three months when the previous two tests indicate the aggregate meets all quality requirements. Samples tested after the start of concrete placement shall be taken immediately prior to entering the concrete mixer.

3.12.2.4 Scales, Batching and Recording

a. Weighing Accuracy. The accuracy of the scales shall be checked by test weights prior to start of concrete operations and at least once every month for conformance with specified requirements. Such tests shall also be made as directed whenever there are

variations in properties of the fresh concrete that could result from batching errors.

b. Batching and Recording Accuracy. Once a week the accuracy of each batching and recording device shall be checked during a weighing operation by noting and recording the required mass, recorded mass, and the actual mass batched. The Contractor shall test and ensure that the devices for dispensing admixtures are operating properly and accurately.

c. Corrective Action. When either the weighing accuracy or batching accuracy does not comply with specification requirements, the plant shall not be operated until necessary adjustments or repairs have been made. Discrepancies in recording accuracies shall be corrected immediately.

3.12.2.5 Batch-Plant Control

The measurement of all constituent materials including cementitious materials, each size of aggregate, water, and admixtures shall be continuously controlled. The aggregate masses and amount of added water shall be adjusted as necessary to compensate for free moisture in the aggregates. The amount of air-entraining agent shall be adjusted to control air content within specified limits. A report shall be prepared indicating type and source of cement used, type and source of pozzolan or slag used, amount and source of admixtures used, aggregate source, the required aggregate and water masses per cubic yard,amount of water as free moisture in each size of aggregate, and the batch aggregate and water masses per cubic yard for each class of concrete batched during each day's plant operation.

3.12.2.6 Concrete Mixture

a. Air Content Testing. Air content tests shall be made when test specimens are fabricated. In addition, at least two other tests for air content shall be made on randomly selected batches of each separate concrete mixture produced during each 8-hour period of paving. Additional tests shall be made when excessive variation in workability is reported by the placing foreman or Government inspector. Tests shall be made in accordance with ASTM C 231. Test results shall be plotted on control charts which are kept current and shall, at all times, be readily available to the Government and shall be submitted weekly. Copies of the current control charts shall be kept in the field by testing crews and results plotted as tests are made. When a single test result reaches either the upper or lower action limit, a second test shall immediately be made. The results of the two tests shall be averaged and this average used as the air content of the batch to plot on both the air content and the control chart for range, and for determining need for any remedial action. The result of each test, or average as noted in the previous sentence, shall be plotted on a separate control chart for each mixture on which an average line is set at the midpoint of the specified air content range from paragraph SPECIFIED CONCRETE STRENGTH AND OTHER PROPERTIES. An upper warning limit and a lower warning limit line shall be set 1.0 percentage point above and below the average line, respectively. An upper action limit and a lower action limit line shall be set 1.5 percentage points above and below the average line, respectively. The range between each two

consecutive tests shall be plotted on a secondary control chart for range where an upper warning limit is set at 2.0 percentage points and an upper action limit is set at 3.0 percentage points. Samples for air content shall be taken at the paving site. The Contractor shall deliver the concrete to the paving site at the stipulated air content. If the Contractor's materials or transportation methods cause air content loss between the mixer and the paving site, correlation samples shall be taken at the paving site as required by the Contracting Officer, and the air content at the mixer controlled as directed.

b. Air Content Corrective Action. Whenever points on the control chart for percent air reach either warning limit, an adjustment shall immediately be made in the amount of air-entraining admixture batched. As soon as practical after each adjustment, another test shall be made to verify the result of the adjustment. Whenever a point on the secondary control chart for range reaches the warning limit, the admixture dispenser shall be recalibrated to insure that it is operating accurately and with good reproducibility. Whenever a point on either control chart (single test or result of two tests made concurrently, as specified above) reaches an action limit line, the air content shall be considered out of control and the paving operation shall immediately be halted until the air content is under control. Additional air content tests shall be made when paving is restarted.

c. Slump Testing. Slump tests shall be made when test specimens are fabricated. In addition, at least four other slump tests shall be made on randomly selected batches in accordance with ASTM C 143/C 143M for each separate concrete mixture produced during each 8-hour or less period of concrete production each day. Also, additional tests shall be made when excessive variation in workability is reported by the placing foreman or Government inspector. Test results shall be plotted on control charts which shall at all times be readily available to the Government and shall be submitted weekly. Copies of the current control charts shall be kept in the field by testing crews and results plotted as tests are made. When a single slump test reaches or goes beyond the upper action limit, a second test shall immediately be made. The results of the two tests shall be averaged and this average used as the slump of the batch to plot on both the control chart for slump and the chart for range, and for determining need for any remedial action. An upper warning limit shall be set at 1/2 inch below the maximum allowable slump on separate control charts for slump used for each type of mixture as specified in paragraph, SPECIFIED CONCRETE STRENGTH AND OTHER PROPERTIES, and an upper action limit line shall be set at the maximum allowable slump, as specified in the same paragraph for fixed form paving or as selected by the Contractor at the start of the project for slipform paving. The range between each consecutive slump test for each type of mixture shall be plotted on a single control chart for range on which an upper action limit is set at 1-1/2 inches. Samples for slump shall be taken at the paving site. The Contractor is responsible for delivering the concrete to the paving site at the stipulated slump. If the Contractor's materials or transportation methods cause slump loss between the mixer and the paving site, correlation samples shall be taken at the paving site as required by the Contracting Officer, and the slump at the mixer controlled as directed.

d. Slump Corrective Action. Whenever points on the control charts for slump reach the upper warning limit, an approved adjustment shall immediately be made in the batch masses of water and fine aggregate. The adjustments are to be made so that the total water content does not exceed that amount allowed by the maximum w/c specified, based on aggregates which are in a saturated surface dry condition. When a slump result (average of two tests made concurrently, as specified above) exceeds the upper action limit, no further concrete shall be delivered to the paving site until proper adjustments have been made. Immediately after each adjustment, another test shall be made to verify the correctness of the adjustment. Whenever two consecutive individual slump tests, made during a period when there was no adjustment of batch masses, produce a point on the control chart for range at or above the upper action limit, the paving operation shall immediately be halted, and the Contractor shall take approved steps to bring the slump under control. Additional slump tests shall be made as directed.

e. Temperature. The temperature of the concrete shall be measured when compressive strength specimens are fabricated. Measurement shall be in accordance with ASTM C 1064/C 1064M. The temperature shall be reported along with the compressive strength data.

3.12.2.7 Concrete Strength Testing for CQC

Contractor Quality Control operations for concrete strength shall consist of the following steps:

a. Take samples for strength tests at the paving site. Fabricate and cure test cylinders in accordance with ASTM C 31/C 31M; test them in accordance with ASTM C 39/C 39M.

b. Fabricate and cure 2 test cylinders per sublot from the same batch or truckload and at the same time acceptance cylinders are fabricated and test them for compressive strength at 7-day age.

c. Average all 8 compressive tests per lot. Convert this average 7-day compressive strength per lot to equivalent 90-day flexural strength using the Correlation Ratio determined during mixture proportioning studies.

d. Compare the equivalent 90-day flexural strength from the conversion to the Average Flexural Strength Required for Mixtures from paragraph of same title.

e. If the equivalent average 90-day strength for the lot is below the Average Flexural Strength Required for Mixtures by 20 psiflexural strength or more, at any time, adjust the mixture to increase the strength, as approved.

f. If the equivalent average 90-day strength is above the Average Flexural Strength Required for Mixtures by 20 psi flexural strength or more for 2 consecutive days, the Contractor will be permitted to adjust the mixture to decrease the strength, as approved.

g. The Contractor's CQC testing agency shall maintain up-to-date

control charts for strength, showing the 7-day CQC compressive strength, the 14-day compressive strength (from acceptance tests) and the 90-day equivalent flexural strength of each of these for each lot.

3.12.2.8 Inspection Before Placing

Underlying materials, construction joint faces, forms, reinforcing, dowels, and embedded items shall be inspected by the Contractor in sufficient time prior to each paving operation in order to certify to the Contracting Officer that they are ready to receive concrete. The results of each inspection shall be reported in writing.

3.12.2.9 Paving

a. Paving Inspection. The placing foreman shall supervise all placing and paving operations, shall determine that the correct quality of concrete is placed in each location as shown and that finishing is performed as specified; shall be responsible for measuring and recording concrete temperatures and ambient temperature hourly during placing operations, weather conditions, time of placement, volume of concrete placed, and method of paving and any problems encountered.

b. Placing and Paving Corrective Action. The paving foreman shall not permit batching and paving to begin until it has been verified that an adequate number of vibrators in working order and with competent operators are available. Paving shall not be continued if piles of concrete exist or if the concrete is inadequately consolidated or if surface finish is not satisfactory. If any batch of concrete fails to meet the temperature requirements, immediate steps shall be taken to improve temperature controls.

3.12.2.10 Vibrators

a. Vibrator Testing and Use. The frequency and amplitude of each vibrator shall be determined in accordance with COE CRD-C 521 prior to initial use and at least once a month when paving is in progress. Additional tests shall be made as directed when a vibrator does not appear to be adequately consolidating the concrete. The frequency shall be determined while the vibrator is operating in concrete with the tachometer being held against the upper end of the vibrator head while almost submerged and just before the vibrator is withdrawn from the concrete. The amplitude shall be determined with the head vibrating in air. Two measurements shall be taken, one near the tip and another near the upper end of the vibrator head, and these results averaged. The make, model, type, and size of the vibrator and frequency and amplitude results shall be reported in writing.

b. Vibrator Corrective Action. Any vibrator not meeting the requirements of subparagraphs, Paver-Finisher and Consolidation, shall be immediately removed from service and repaired or replaced.

3.12.2.11 Curing Inspection

a. Moist Curing Inspections. At least twice each shift, and not less than four times per day (never more than 7 hours apart) on both work and non-work days, an inspection shall be made of all areas

subject to moist curing. The surface moisture condition shall be noted and recorded.

b. Moist Curing Corrective Action. When any inspection finds an area of inadequate curing, immediate corrective action shall be taken, and the required curing period for the area shall be extended by 1 day.

c. Membrane Curing Inspection. No curing compound shall be applied until the Contractor has verified that the compound is properly mixed and ready for spraying. At the end of each day's operation, the quantity of compound used shall be determined by measurement of the container and the area of concrete surface covered; the Contractor shall then compute the rate of coverage in square feet per gallon and shall also note whether or not coverage is uniform. All this shall be reported daily.

d. Membrane Curing Corrective Action. When the coverage rate of the curing compound is less than that specified or when the coverage is not uniform, the entire surface shall be sprayed again.

e. Sheet Curing Inspection. At least once each shift and once per day on non-work days, an inspection shall be made of all areas being cured using impervious sheets. The condition of the covering and the tightness of the laps and tapes shall be noted and recorded.

f. Sheet Curing Corrective Action. When a daily inspection report lists any tears, holes, or laps or joints that are not completely closed, the tears and holes shall promptly be repaired or the sheets replaced, the joints closed, and the required curing period for those areas shall be extended by 1 day.

3.12.2.12 Cold-Weather Protection

At least once each shift and once per day on non-work days, an inspection shall be made of all areas subject to cold-weather protection. Any deficiencies shall be noted, corrected, and reported.

3.12.2.13 Mixer Uniformity

a. Stationary Mixers. Prior to the start of concrete placing and once every 4 months when concrete is being placed, or once for every 50,000 cubic yards of concrete placed, whichever results in the longest time interval, uniformity of concrete mixing shall be determined in accordance with COE CRD-C 55. The original test shall be a Regular Test. After the mixing operation has been tested and approved, subsequent tests shall be Abbreviated Tests.

b. Truck Mixers. Prior to the start of concrete placing and at least once every 4 months when concrete is being placed, uniformity of concrete mixing shall be determined in accordance with ASTM C 94/C 94M. The truck mixers shall be selected randomly for testing. When satisfactory performance is found in one truck mixer, the performance of mixers of substantially the same design and condition of the blades may be regarded as satisfactory.

c. Mixer Uniformity Corrective Action. When a mixer fails to meet mixer uniformity requirements, either the mixing time shall be

increased, batching sequence changed, batch size reduced, or adjustments shall be made to the mixer until compliance is achieved. After adjustments have been made, another uniformity test shall be made.

3.12.2.14 Reports

All results of tests or inspections conducted shall be reported informally as they are completed and in writing daily. A weekly report shall be prepared for the updating of control charts covering the entire period from the start of the construction season through the current week. During periods of cold-weather protection, reports of pertinent temperatures shall be made daily. These requirements do not relieve the Contractor of the obligation to report certain failures immediately as required in preceding paragraphs. Such reports of failures and the action taken shall be confirmed in writing in the routine reports. The Contracting Officer has the right to examine all contractor quality control records.

-- End of Section --

SECTION TABLE OF CONTENTS

DIVISION 02 - SITE WORK

SECTION 02762A

COMPRESSION JOINT SEALS FOR CONCRETE PAVEMENTS

11/01

PART 1 GENERAL

1.1 REFERENCES
1.2 SAFETY
1.3 SUBMITTALS
1.4 TEST REQUIREMENTS
1.5 EQUIPMENT
1.5.1 Joint Cleaning Equipment
1.5.1.1 Concrete Saw
1.5.1.2 Sandblasting Equipment
1.5.1.3 Waterblasting Equipment
1.5.2 Sealing Equipment
1.6 TRIAL JOINT SEAL AND LUBRICANT/ADHESIVE INSTALLATION
1.7 DELIVERY AND STORAGE
1.8 ENVIRONMENTAL CONDITIONS

PART 2 PRODUCTS

2.1 COMPRESSION SEALS
2.2 LUBRICANT/ADHESIVE

PART 3 EXECUTION

3.1 PREPARATION OF JOINTS
3.1.1 Sawing
3.1.2 Sandblast Cleaning
3.1.3 Waterblast Cleaning
3.1.4 Rate of Progress
3.2 INSTALLATION OF THE COMPRESSION SEAL
3.2.1 Time of Installation
3.2.2 Sequence of Installation
3.3 SEALING OF JOINTS
3.4 CLEAN-UP
3.5 QUALITY CONTROL PROVISIONS
3.5.1 Application Equipment
3.5.2 Procedures
3.5.2.1 Quality Control Inspection
3.5.2.2 Conformance to Stretching and compression Limitations
3.5.2.3 Pavement Temperature
3.5.3 Product

-- End of Section Table of Contents --

UFGS-02762A (November 2001)

SECTION 02762A

COMPRESSION JOINT SEALS FOR CONCRETE PAVEMENTS
11/01

PART 1 GENERAL

1.1 REFERENCES

The publications listed below form a part of this specification to the extent referenced. The publications are referred to in this text by basic designation only.

AMERICAN SOCIETY FOR TESTING AND MATERIALS (ASTM)

ASTM D 2628	(1991; R 1998) Preformed Polychloroprene Elastomeric Joint Seals for Concrete Pavements
ASTM D 2835	(1989; R 1998) Lubricant for Installation of Preformed Compression Seals in Concrete Pavements

1.2 SAFETY

Compression joint seals shall not be placed within 25 feet of liquid oxygen (LOX) equipment, LOX storage, or LOX piping.

1.3 SUBMITTALS

Government approval is required for submittals with a "G" designation; submittals not having a "G" designation are for information only. When used, a designation following the "G" designation identifies the office that will review the submittal for the Government. The following shall be submitted in accordance with Section 01330 SUBMITTAL PROCEDURES:

SD-03 Product Data

Equipment

List of proposed equipment to be used in the performance of construction work, including descriptive data, 15 days prior to use on the project.

Manufacturer's Instructions

Where installation procedures are required in accordance with the manufacturer's recommendations, printed copies of manufacturers' instructions, 15 days prior to use on the project.

SD-04, Samples

Compression Seals

Regardless of testing responsibility, 4-foot long samples of the materials, 60 days prior to use on the project. Printed directions from the manufacturer on recommended installation criteria shall be furnished with the samples plus the manufacturer's certification that the selected seal is recommended for the installation on this project.

SD-06 Test Reports

Test Requirements

Certified copies of test results, 15 days prior to use of material on the project.

1.4 TEST REQUIREMENTS

Each lot of compression joint seal and lubricant/adhesive shall be sampled, identified, and tested for conformance with the applicable material specification. A lot of compression seal shall consist of 1 day's production or 20,000 linear feet for each cross section, whichever is less. A lot of lubricant/adhesive shall consist of 1 day's production. Samples of the compression joint seal and lubricant/adhesive material shall be submitted and will be tested by the Contractor. No material shall be used at the project prior to receipt of written notice that the materials meet the laboratory requirements. The cost of testing the samples from each original lot supplied will be borne by the Contractor. If the samples fail to meet specification requirements, the materials represented by the sample shall be replaced and the new materials tested. Testing of the compression joint seal and lubricant/adhesive material shall be the responsibility of the Contractor and shall be performed in an approved independent laboratory, and certified copies of the test reports shall be submitted for approval 30 days prior to the use of the materials at the jobsite. Samples of each lot of material shall also be submitted and will be retained by the Government for possible future testing should the materials appear defective during or after application. The Contractor shall furnish additional samples of materials, in sufficient quantity to be tested, upon request. Final acceptance will be based on conformance to the specified test requirements and the performance of the in-place materials.

1.5 EQUIPMENT

Machines, tools, and equipment used in the performance of the work required by this section shall be approved before the work is started and shall be maintained in satisfactory condition at all times.

1.5.1 Joint Cleaning Equipment

1.5.1.1 Concrete Saw

A self-propelled power saw with water-cooled diamond saw blades shall be provided for cutting joints to the depths and widths specified and for removing filler, existing old joint seal, or other material embedded in the joints or adhered to the joint faces.

1.5.1.2 Sandblasting Equipment

Sandblasting equipment shall include an air compressor, hose, and a long-wearing venturi-type nozzle of proper size, shape, and opening. The maximum nozzle opening should not exceed 1/4 inch. The air compressor

shall be portable and shall be capable of furnishing not less than 150 cubic feet per minute and maintaining a line pressure of not less than 90 psi at the nozzle while in use. The compressor shall be equipped with traps that will maintain the compressed air free of oil and water. The nozzle shall have an adjustable guide that will hold the nozzle aligned with the joint about 1 inch above the pavement surface and will direct the blast to clean the joint walls. The height, angle of inclination, and the size of the nozzle shall be adjusted as necessary to ensure satisfactory results.

1.5.1.3 Waterblasting Equipment

Waterblasting equipment shall include a trailer-mounted water tank, pumps, high-pressure hose, a wand with safety release cutoff controls, nozzle, and auxiliary water resupply equipment. The water tank and auxiliary water resupply equipment shall be of sufficient capacity to permit continuous operations. The pumps, hoses, wand, and nozzle shall be of sufficient capacity to permit the cleaning of both walls of the joint and the pavement surface for a width of at least 1/2 inch on either side of the joint. A pressure gauge mounted at the pump shall show at all times the pressure in psi at which the equipment is operating.

1.5.2 Sealing Equipment

Equipment used to install the compression seal shall place the compression seal to the prescribed depths within the specified tolerances without cutting, nicking, twisting, or otherwise damaging the seal. The equipment shall be capable of placing the seal with not more than two percent longitudinal stretch or compression of the seal during installation. The machine shall be an automatic self-propelled joint seal application equipment and engine powered. The machine shall include a reservoir for the lubricant/adhesive, a device for conveying the lubricant/adhesive in the proper quantities to the sides of the compression seal or the sidewalls of the joints, a reel capable of holding one full spool of compression seal, and a power-driven apparatus for feeding the joint seal through a compression device and inserting the seal into the joint. The equipment shall also include a guide to maintain the proper course along the joint being sealed. The machine shall at all times be operated by an experienced operator.

1.6 TRIAL JOINT SEAL AND LUBRICANT/ADHESIVE INSTALLATION

Prior to the cleaning and sealing of the joints for the entire project, a test section at least 200 feet long shall be prepared at a designated location in the project pavement, using the specified materials and the approved equipment to demonstrate the proposed joint preparation and sealing of all types of joints in the project. Following the completion of the trial length and before any other joint is sealed, the trial joints will be inspected by the Government to determine that the materials and installation meet the requirements specified. If materials or installation do not meet requirements, the materials shall be removed, and the joints shall be recleaned and resealed at no cost to the Government. No other joints shall be sealed until the test installation has been approved. If the trial section is approved, it may be incorporated into the permanent work. Other joints shall be sealed in the manner approved for sealing the trial joint.

1.7 DELIVERY AND STORAGE

Materials delivered to the jobsite shall be inspected for defects, unloaded, and stored with a minimum of handling to avoid damage. Storage facilities shall protect materials from weather and shall maintain materials at temperatures recommended by the manufacturer.

1.8 ENVIRONMENTAL CONDITIONS

The ambient temperature and the pavement temperature within the joint wall shall be at least 35 degrees F and rising at the time of installation of the materials. Sealant installation will not be allowed if moisture or foreign material is observed in the joint.

PART 2 PRODUCTS

2.1 COMPRESSION SEALS

Compression joint seal materials shall be a vulcanized elastomeric compound using polychloroprene as the only base polymer. The material and manufactured seal shall conform to ASTM D 2628. The joint seal shall be a labyrinth type seal. The uncompressed depth of the face of the compression seal (that is to be bonded to the joint wall) shall be greater than the uncompressed width of the seal, except that for seals 1 inch or greater in width, the depth need be only 1 inch or greater. The actual width of the uncompressed seal for construction and contraction joints shall be 0.75 or 1 inch and for expansion joints shall be 1.25 inches. The tolerance on the seal shall be plus 1/8 inch or minus 1/16 inch.

2.2 LUBRICANT/ADHESIVE

Lubricant/adhesive used for the compression elastomeric joint seal shall be a one-component compound conforming to ASTM D 2835.

PART 3 EXECUTION

3.1 PREPARATION OF JOINTS

Immediately before installation of the compression joint seal, the joints shall be thoroughly cleaned to remove laitance, filler, existing sealer, foreign material and protrusions of hardened concrete from the sides and upper edges of the joint space to be sealed. Cleaning shall be by sandblasting or waterblasting and shall extend along pavement surfaces at least 1/2 inch on either side of the joint. After final cleaning and immediately prior to sealing, the joints shall be blown out with compressed air and left completely free of debris and water. The Contractor shall demonstrate that the selected cleaning operation meets the cleanliness requirements. Any irregularity in the joint face which would prevent uniform contact between the joint seal and the joint face shall be corrected prior to the installation of the joint seal.

3.1.1 Sawing

Joints shall be cleaned and opened to the specified width and depth by sawing. Immediately following the sawing operation, the joint faces and opening shall be thoroughly cleaned using a water jet to remove saw cuttings or debris remaining on the faces or in the joint opening. Compression seal shall be installed within 3 calendar days of the time the joint cavity is sawed. Depth of the joint cavity shall be per manufacturer's instructions. The saw cut for the joint seal cavity shall be centered over the joint line. The nominal width of the sawed joint seal

cavity shall be as follows; the actual width shall be within a tolerance of plus or minus 1/16 inch: the width of saw cut shall be as stated by the manufacturer.

3.1.2 Sandblast Cleaning

A multiple pass sandblasting technique shall be used until the surfaces are free of dust, dirt, curing compound, or any residue that might prevent ready insertion or uniform contact of the seal and bonding of the lubricant/adhesive to the concrete.

3.1.3 Waterblast Cleaning

A multiple pass waterblast technique shall be used until the surfaces are free of dust, dirt, curing compound, or any residue that might prevent ready insertion or uniform contact of the seal and bonding of the lubricant/adhesive to the concrete.

3.1.4 Rate of Progress

Sandblasting or waterblasting of joint faces shall be limited to the length of joint that can be sealed during the same workday.

3.2 INSTALLATION OF THE COMPRESSION SEAL

3.2.1 Time of Installation

Joints shall be sealed immediately within 3 calendar days of sawing the joint seal cavity and following concrete cure and the final cleaning of the joint walls. Open joints ready for sealing that cannot be sealed under the specified conditions shall be provided with an approved temporary seal to prevent infiltration of foreign material. When rain interrupts the sealing operations, the joints shall be washed, air pressure cleaned, and allowed to dry prior to installing the lubricant/adhesive and compression seal.

3.2.2 Sequence of Installation

Longitudinal joints shall be sealed first, followed by transverse joints. Seals in longitudinal joints shall be installed so that all transverse joint seals will be intact from edge to edge of the pavement. Intersections shall be made monolithic by use of joint seal adhesive and care in fitting the intersection parts together. Extender pieces of seal shall not be used at intersections. Any seal falling short at the intersection shall be removed and replaced with new seal at no additional cost to the Government. Seals that are required to change direction by more than 20 degrees, may require a poured sealant at the intersection. Poured sealant shall be per compression seal manufacturer's instructions.

3.3 SEALING OF JOINTS

The sides of the joint seal or the sides of the joint shall be covered with a coating of lubricant/adhesive and the seal installed as specified. Butt joints and seal intersections shall be coated with liberal applications of lubricant/adhesive. Lubricant/adhesive spilled on the pavement shall be removed immediately to prevent setting on the pavement. The in-place joint seal shall be in an upright position and free from twisting, distortion, and cuts. Adjustments shall be made to the installation equipment and procedure, if the stretch exceeds 1 percent. Any seal exceeding 2 percent stretch shall be removed and replaced. The joint seal shall be placed at a

uniform depth within the tolerances specified. In-place joint seal which fails to meet the specified requirements shall be removed and replaced with new joint seal at no cost to the Government. The compression joint seal shall be placed to a depth of 1/4 inch, plus or minus 1/8 inch, below the pavement surface except when the joint is beveled or has a radius at the surface, or unless otherwise directed. For beveled joints or joints with a radius at the surface, the compression joint seal shall be installed at a depth of 1/8 inch, plus or minus 1/8 inch, below the bottom of the edge of the bevel or radius. No part of the seal shall be allowed to project above the surface of the pavement or above the edge of the bevel or radius. The seal shall be installed in the longest practicable lengths in longitudinal joints and shall be cut at the joint intersections to provide continuous installation of the seal in the transverse joints. The lubricant/adhesive in the longitudinal joints shall be allowed to set for 1 hour prior to cutting at the joint intersections to reduce the possibility of shrinkage. For all transverse joints, the minimum length of the compression joint seal shall be the pavement width from edge to edge.

3.4 CLEAN-UP

Upon completion of the project, all unused materials shall be removed from the site, any lubricant/adhesive on the pavement surface shall be removed, and the pavement shall be left in clean condition.

3.5 QUALITY CONTROL PROVISIONS

3.5.1 Application Equipment

The application equipment shall be inspected to assure uniform application of lubricant/adhesive to the sides of the compression joint seal or the walls of the joint. If any equipment causes cutting, twisting, nicking, excessive stretching or compressing of the seal, or improper application of the lubricant/adhesive, the operation shall be suspended until causes of the deficiencies are determined and corrected.

3.5.2 Procedures

3.5.2.1 Quality Control Inspection

Quality control provisions shall be provided during the joint cleaning process to prevent or correct improper equipment and cleaning techniques that damage the concrete in any manner. Cleaned joints shall be approved by the Government prior to installation of the lubricant/adhesive and compression joint seal.

3.5.2.2 Conformance to Stretching and compression Limitations

Conformance to stretching and compression limitations shall be determined. The top surface of the compression seal shall be marked at 1 foot intervals in a manner clear and durable to enable length determinations of the seal. After installation, the distance between the marks shall be measured on the seal. If the stretching or compression exceeds 2 percent, the seal shall be removed and replaced with new joint at no additional cost to the Government. The seal shall be removed up to the last correct measurement. The seal shall be inspected a minimum of once per 400 feet of seal for compliance to the shrinkage or compression requirements. Measurements shall also be made at the same interval to determine conformance with depth and width of installation requirements. Compression seal that is not in conformance with specification requirements shall be removed and replaced

with new joint seal at no additional cost to the Government.

3.5.2.3 Pavement Temperature

The pavement temperature shall be determined by placing a thermometer in the initial saw cut for the joint and the reading shall be recorded. The thermometer shall remain in the joint for an adequate time to provide a control reading.

3.5.3 Product

The joint sealing system (compression seal and lubricant/adhesive) shall be inspected for proper rate of cure and bonding to the concrete, cuts, twists, nicks and other deficiencies. Seals exhibiting any defects, at any time prior to final acceptance of the project, shall be removed from the joint, wasted, and replaced in a satisfactory manner.

-- End of Section --

SECTION TABLE OF CONTENTS

DIVISION 02 - SITE WORK

SECTION 02763A

PAVEMENT MARKINGS

04/01

PART 1 GENERAL

1.1 REFERENCES
1.2 OMITTED
1.3 SUBMITTALS
1.4 DELIVERY AND STORAGE
1.5 EQUIPMENT
1.5.1 Paint Application Equipment
1.5.2 Thermoplastic Application Equipment
1.5.2.1 Thermoplastic Material
1.5.2.2 Application Equipment
1.5.2.3 Mobile and Maneuverable
1.5.3 Reflective Media Dispenser
1.5.4 Omitted
1.5.5 Surface Preparation Equipment
1.5.5.1 Sandblasting Equipment
1.5.5.2 Waterblast Equipment
1.5.6 Marking Removal Equipment
1.5.6.1 Shotblasting Equipment
1.5.6.2 Chemical Equipment
1.5.7 Traffic Controls
1.6 HAND-OPERATED, PUSH-TYPE MACHINES
1.7 MAINTENANCE OF TRAFFIC
1.7.1 Airfield
1.7.2 Roads, Streets, and Parking Areas
1.8 WEATHER LIMITATIONS FOR REMOVAL

PART 2 PRODUCTS

2.1 PAINT
2.2 THERMOPLASTIC COMPOUNDS
2.2.1 Composition Requirements
2.2.2 Physical Properties
2.2.2.1 Color
2.2.2.2 Drying Time
2.2.2.3 Softening Point
2.2.2.4 Specific Gravity
2.2.3 Asphalt Concrete Primer
2.2.4 Portland Cement Concrete Primer
2.3 PREFORMED TAPE
2.4 OMITTED
2.5 REFLECTIVE MEDIA
2.6 SAMPLING AND TESTING

PART 3 EXECUTION

3.1 SURFACE PREPARATION
3.1.1 Pretreatment for Early Painting

3.1.2 Cleaning Existing Pavement Markings
3.1.3 Cleaning Concrete Curing Compounds
3.2 APPLICATION
3.2.1 Paint
3.2.1.1 Rate of Application
3.2.1.2 Drying
3.2.2 Thermoplastic Compounds
3.2.2.1 Longitudinal Markings
3.2.2.2 Primer
3.2.2.3 Markings
3.2.3 Omitted
3.2.4 Omitted
3.2.5 Reflective Media
3.3 MARKING REMOVAL
3.3.1 Equipment Operation
3.3.2 Cleanup and Waste Disposal

-- End of Section Table of Contents --

UFGS-02763A (April 2001)

SECTION 02763A

PAVEMENT MARKINGS
04/01

PART 1 GENERAL

1.1 REFERENCES

The publications listed below form a part of this specification to the extent referenced. The publications are referred to in the text by basic designation only.

AMERICAN ASSOCIATION OF STATE HIGHWAY AND TRANSPORTATION OFFICIALS (AASHTO)

AASHTO M 247	(1981; R 1996) Glass Beads Used in Traffic Paint

AMERICAN SOCIETY FOR TESTING AND MATERIALS (ASTM)

ASTM D 792	(1998) Density and Specific Gravity (Relative Density) of Plastics by Displacement
ASTM D 4505	(1996) Preformed Plastic Pavement Marking Tape for Extended Service Life
ASTM E 28	(1999) Softening Point of Resins by Ring and Ball Apparatus

U.S. GENERAL SERVICES ADMINISTRATION (GSA)

FS TT-B-1325	(Rev C; Notice 1; Canc. Notice 2) Beads (Glass Spheres) Retro-Reflective (Metric)
FS TT-P-1952	(Rev D; Canc. Notice 1) Paint, Traffic and Airfield Marking, Waterborne (Metric)

1.2 OMITTED

1.3 SUBMITTALS

Government approval is required for submittals with a "G" designation; submittals not having a "G" designation are for information only. When used, a designation following the "G" designation identifies the office that will review the submittal for the Government. The following shall be submitted in accordance with Section 01330 SUBMITTAL PROCEDURES:

SD-03 Product Data

Equipment

Lists of proposed equipment, including descriptive data, and

notifications of proposed Contractor actions as specified in this section. List of removal equipment shall include descriptive data indicating area of coverage per pass, pressure adjustment range, tank and flow capacities, and safety precautions required for the equipment operation.

Composition Requirements

Manufacturer's current printed product description and Material Safety Data Sheets (MSDS) for each type paint/color proposed for use.

Qualifications

Document certifying that personnel are qualified for equipment operation and handling of chemicals.

SD-06 Test Reports

Sampling and Testing

Certified copies of the test reports, prior to the use of the materials at the jobsite. Testing shall be performed in an approved independent laboratory.

SD-07 Certificates

Volatile Organic Compound (VOC)

Certificate stating that the proposed pavement marking paint meets the VOC regulations of the local Air Pollution Control District having jurisdiction over the geographical area in which the project is located.

1.4 DELIVERY AND STORAGE

All materials shall be delivered and stored in sealed containers that plainly show the designated name, formula or specification number, batch number, color, date of manufacture, manufacturer's name, and directions, all of which shall be plainly legible at time of use.

1.5 EQUIPMENT

All machines, tools and equipment used in the performance of the work shall be approved and maintained in satisfactory operating condition. Equipment operating on roads and runways shall display low speed traffic markings and traffic warning lights.

1.5.1 Paint Application Equipment

The equipment to apply paint to pavements shall be a self-propelled or mobile-drawn pneumatic spraying machine with suitable arrangements of atomizing nozzles and controls to obtain the specified results. The machine shall have a speed during application not less than 5 mph, and shall be capable of applying the stripe widths indicated, at the paint coverage rate specified in paragraph APPLICATION, and of even uniform thickness with clear-cut edges. The equipment used to apply the paint binder to airfield pavements shall be a self-propelled or mobile-drawn pneumatic spraying machine with an arrangement of atomizing nozzles capable

of applying a line width at any one time in multiples of 6 inches, from 6 inches to 36 inches. The paint applicator shall have paint reservoirs or tanks of sufficient capacity and suitable gauges to apply paint in accordance with requirements specified. Tanks shall be equipped with suitable air-driven mechanical agitators. The spray mechanism shall be equipped with quick-action valves conveniently located, and shall include necessary pressure regulators and gauges in full view and reach of the operator. Paint strainers shall be installed in paint supply lines to ensure freedom from residue and foreign matter that may cause malfunction of the spray guns. The paint applicator shall be readily adaptable for attachment of an air-actuated dispenser for the reflective media approved for use. Pneumatic spray guns shall be provided for hand application of paint in areas where the mobile paint applicator cannot be used.

1.5.2 Thermoplastic Application Equipment

1.5.2.1 Thermoplastic Material

Thermoplastic material shall be applied to the primed pavement surface by spray techniques or by the extrusion method, wherein one side of the shaping die is the pavement and the other three sides are contained by, or are part of, suitable equipment for heating and controlling the flow of material. By either method, the markings shall be applied with equipment that is capable of providing continuous uniformity in the dimensions of the stripe.

1.5.2.2 Application Equipment

a. Application equipment shall provide continuous mixing and agitation of the material. Conveying parts of the equipment between the main material reservoir and the extrusion shoe or spray gun shall prevent accumulation and clogging. All parts of the equipment which come into contact with the material shall be easily accessible and exposable for cleaning and maintenance. All mixing and conveying parts up to and including the extrusion shoes and spray guns shall maintain the material at the required temperature with heat-transfer oil or electrical-element-controlled heat.

b. The application equipment shall be constructed to ensure continuous uniformity in the dimensions of the stripe. The applicator shall provide a means for cleanly cutting off stripe ends squarely and shall provide a method of applying "skiplines". The equipment shall be capable of applying varying widths of traffic markings.

c. The applicator shall be equipped with a drop-on type bead dispenser capable of uniformly dispensing reflective glass spheres at controlled rates of flow. The bead dispenser shall be automatically operated and shall begin flow prior to the flow of composition to assure that the strip is fully reflectorized.

1.5.2.3 Mobile and Maneuverable

Application equipment shall be mobile and maneuverable to the extent that straight lines can be followed and normal curves can be made in a true arc. The equipment used for the placement of thermoplastic pavement markings shall be of two general types: mobile applicator and portable applicator.

a. Mobile Application Equipment: The mobile applicator shall be defined as a truck-mounted, self-contained pavement marking machine that is

capable of hot applying thermoplastic by either the extrusion or spray method. The unit shall be equipped to apply the thermoplastic marking material at temperatures exceeding 375 degrees F, at widths varying from 3 to 12 inches and in thicknesses varying from 0.020 to 0.190 inch and shall have an automatic drop-on bead system. The mobile unit shall be capable of operating continuously and of installing a minimum of 20,000 lineal feet of longitudinal markings in an 8-hour day.

(1) The mobile unit shall be equipped with a melting kettle which holds a minimum of 6000 pounds of molten thermoplastic material. The kettle shall be capable of heating the thermoplastic composition to temperatures of 375 to 425 degrees F. A thermostatically controlled heat transfer liquid shall be used. Heating of the composition by direct flame will not be allowed. Oil and material temperature gauges shall be visible at both ends of the kettle.

(2) The mobile unit shall be equipped with an electronic programmable line pattern control system. The control system shall be capable of applying skip or solid lines in any sequence, through any and all of the extrusion shoes, or the spray guns, and in programmable cycle lengths. In addition, the mobile unit shall be equipped with an automatic counting mechanism capable of recording the number of lineal feet of thermoplastic markings applied to the pavement surface with an accuracy of 0.5 percent.

b. Portable Application Equipment: The portable applicator shall be defined as hand-operated equipment, specifically designed for placing special markings such as crosswalks, stopbars, legends, arrows, and short lengths of lane, edge and centerlines. The portable applicator shall be capable of applying thermoplastic pavement markings by the extrusion method. The portable applicator shall be loaded with hot thermoplastic composition from the melting kettles on the mobile applicator. The portable applicator shall be equipped with all the necessary components, including a materials storage reservoir, bead dispenser, extrusion shoe, and heating accessories, so as to be capable of holding the molten thermoplastic at a temperature of 375 to 425 degrees F, of extruding a line of 3 to 12 inches in width, and in thicknesses of not less than 0.125 inch nor more than 0.190 inch and of generally uniform cross section.

1.5.3 Reflective Media Dispenser

The dispenser for applying the reflective media shall be attached to the paint dispenser and shall operate automatically and simultaneously with the applicator through the same control mechanism. The dispenser shall be capable of adjustment and designed to provide uniform flow of reflective media over the full length and width of the stripe at the rate of coverage specified in paragraph APPLICATION, at all operating speeds of the applicator to which it is attached.

1.5.4 Omitted

1.5.5 Surface Preparation Equipment

1.5.5.1 Sandblasting Equipment

Sandblasting equipment shall include an air compressor, hoses, and nozzles of proper size and capacity as required for cleaning surfaces to be painted. The compressor shall be capable of furnishing not less than 150 cfm of air at a pressure of not less than 90 psi at each nozzle used, and

shall be equipped with traps that will maintain the compressed air free of oil and water.

1.5.5.2 Waterblast Equipment

The water pressure shall be specified at 2600 psi at 140 degrees F in order to adequately clean the surfaces to be marked.

1.5.6 Marking Removal Equipment

Equipment shall be mounted on rubber tires and shall be capable of removing markings from the pavement without damaging the pavement surface or joint sealant. Waterblasting equipment shall be capable of producing an adjustable, pressurized stream of water. Sandblasting equipment shall include an air compressor, hoses, and nozzles. The compressor shall be equipped with traps to maintain the air free of oil and water.

1.5.6.1 Shotblasting Equipment

Shotblasting equipment shall be capable of producing an adjustable depth of removal of marking and pavement. Each unit shall be self-cleaning and self-contained, shall be able to confine dust and debris from the operation, and shall be capable of recycling the abrasive for reuse.

1.5.6.2 Chemical Equipment

Chemical equipment shall be capable of application and removal of chemicals from the pavement surface, and shall leave only non-toxic biodegradeable residue.

1.5.7 Traffic Controls

Suitable warning signs shall be placed near the beginning of the worksite and well ahead of the worksite for alerting approaching traffic from both directions. Small markers shall be placed along newly painted lines or freshly placed raised markers to control traffic and prevent damage to newly painted surfaces or displacement of raised pavement markers. Painting equipment shall be marked with large warning signs indicating slow-moving painting equipment in operation.

1.6 HAND-OPERATED, PUSH-TYPE MACHINES

All machines, tools, and equipment used in performance of the work shall be approved and maintained in satisfactory operating condition. Hand-operated push-type machines of a type commonly used for application of paint to pavement surfaces will be acceptable for marking small streets and parking areas. Applicator machine shall be equipped with the necessary paint tanks and spraying nozzles, and shall be capable of applying paint uniformly at coverage specified. Sandblasting equipment shall be provided as required for cleaning surfaces to be painted. Hand-operated spray guns shall be provided for use in areas where push-type machines cannot be used.

1.7 MAINTENANCE OF TRAFFIC

1.7.1 Airfield

The performance of work in the controlled zones of airfields shall be coordinated with the Contracting Officer and with the Flight Operations Officer. Verbal communications shall be maintained with the control tower

before and during work in the controlled zones of the airfield. The control tower shall be advised when the work is completed. A radio for this purpose shall be provided by the Contractor and approved by the Contracting Officer.

1.7.2 Roads, Streets, and Parking Areas

When traffic must be rerouted or controlled to accomplish the work, the necessary warning signs, flagpersons, and related equipment for the safe passage of vehicles shall be provided.

1.8 WEATHER LIMITATIONS FOR REMOVAL

Pavement surface shall be free of snow, ice, or slush. Surface temperature shall be at least 40 degrees F and rising at the beginning of operations, except those involving shot or sand blasting. Operation shall cease during thunderstorms. Operation shall cease during rainfall, except for waterblasting and removal of previously applied chemicals. Waterblasting shall cease where surface water accumulation alters the effectiveness of material removal.

PART 2 PRODUCTS

2.1 PAINT

The paint shall be homogeneous, easily stirred to smooth consistency, and shall show no hard settlement or other objectionable characteristics during a storage period of 6 months. Paints for airfields, roads, and streets shall conform to FS TT-P-1952, color as indicated. Pavement marking paints shall comply with applicable state and local laws enacted to ensure compliance with Federal Clean Air Standards. Paint materials shall conform to the restrictions of the local Air Pollution Control District.

2.2 THERMOPLASTIC COMPOUNDS

The thermoplastic reflectorized pavement marking compound shall be extruded or sprayed in a molten state onto a primed pavement surface. Following a surface application of glass beads and upon cooling to normal pavement temperatures, the marking shall be an adherent reflectorized strip of the specified thickness and width that is capable of resisting deformation by traffic.

2.2.1 Composition Requirements

The binder component shall be formulated as a hydrocarbon resin. The pigment, beads and filler shall be uniformly dispersed in the binder resin. The thermoplastic composition shall be free from all skins, dirt, and foreign objects and shall comply with the following requirements:

	Percent by Weight	
Component	White	Yellow
Binder	17 min.	17 min.
Titanium dioxide	10 min.	-

Component	Percent by Weight White	Percent by Weight Yellow
Glass beads,	20 min.	20 min.
Calcium carbonate & inert fillers	49 max.	*
Yellow pigments	-	*

*Amount and type of yellow pigment, calcium carbonate and inert fillers shall be at the option of the manufacturer, providing the other composition requirements of this specification are met.

2.2.2 Physical Properties

2.2.2.1 Color

The color shall be as indicated.

2.2.2.2 Drying Time

When installed at 70 degrees F and in thicknesses between 1/8 and 3/16 inch, the composition shall be completely solid and shall show no damaging effect from traffic after curing 15 minutes.

2.2.2.3 Softening Point

The composition shall have a softening point of not less than 194 degrees F when tested in accordance with ASTM E 28.

2.2.2.4 Specific Gravity

The specific gravity of the composition shall be between 1.9 and 2.2 as determined in accordance with ASTM D 792.

2.2.3 Asphalt Concrete Primer

The primer for asphalt concrete pavements shall be a thermosetting adhesive with a solids content of pigment reinforced synthetic rubber and synthetic plastic resin dissolved and/or dispersed in a volatile organic compound (VOC). Solids content shall not be less than 10 percent by weight at 70 degrees F and 60 percent relative humidity. A wet film thickness of 0.005 inch plus or minus 0.001 inch, shall dry to a tack-free condition in less than 5 minutes.

2.2.4 Portland Cement Concrete Primer

The primer for Portland cement concrete pavements shall be an epoxy resin primer. The primer shall be of the type recommended by the manufacturer of the thermoplastic composition. Epoxy primers recommended by the manufacturer shall be approved by the Contracting Officer prior to use. Requests for approval shall be accompanied with technical data, instructions for use, and a 1 quart sample of the primer material.

2.3 PREFORMED TAPE

The preformed tape shall be an adherent reflectorized strip in accordance with ASTM D 4505 Type I or IV, Class optional.

2.4 OMITTED

2.5 REFLECTIVE MEDIA

Reflective media for airfields shall conform to FS TT-B-1325, Type I, Gradation A. Reflective media for roads and streets shall conform to FS TT-B-1325, Type I, Gradation A or AASHTO M 247, Type I.

2.6 SAMPLING AND TESTING

Materials proposed for use shall be stored on the project site in sealed and labeled containers, or segregated at source of supply, sufficiently in advance of needs to allow 60 days for testing. Upon notification by the Contractor that the material is at the site or source of supply, a sample shall be taken by random selection from sealed containers by the Contractor in the presence of a representative of the Contracting Officer. Samples shall be clearly identified by designated name, specification number, batch number, manufacturer's formulation number, project contract number, intended use, and quantity involved. No material shall be used at the project prior to receipt by the Contractor of written notice that the materials meet the laboratory requirements. The cost of initial testing of samples from each lot of materials will be borne by the Contractor. If the sample fails to meet specification requirements, the material represented by the sample shall be replaced and the new material will be tested. Cost of sampling and testing the new material will be borne by the Contractor. Testing shall be performed in an approved independent laboratory. If materials are approved based on reports furnished by the Contractor, samples will be retained by the Government for possible future testing should the material appear defective during or after application.

PART 3 EXECUTION

3.1 SURFACE PREPARATION

Surfaces to be marked shall be thoroughly cleaned before application of the pavement marking material. Dust, dirt, and other granular surface deposits shall be removed by sweeping, blowing with compressed air, rinsing with water or a combination of these methods as required. Rubber deposits, surface laitance, existing paint markings, and other coatings adhering to the pavement shall be completely removed with scrapers, wire brushes, sandblasting, approved chemicals, or mechanical abrasion as directed. Areas of old pavement affected with oil or grease shall be scrubbed with several applications of trisodium phosphate solution or other approved detergent or degreaser, and rinsed thoroughly after each application. After cleaning, oil-soaked areas shall be sealed with cut shellac to prevent bleeding through the new paint. Pavement surfaces shall be allowed to dry, when water is used for cleaning, prior to striping or marking. Surfaces shall be recleaned, when work has been stopped due to rain.

3.1.1 Pretreatment for Early Painting

Where early painting is required on rigid pavements, a pretreatment with an aqueous solution containing 3 percent phosphoric acid and 2 percent zinc chloride shall be applied to prepared pavement areas prior to painting.

3.1.2 Cleaning Existing Pavement Markings

In general, markings shall not be placed over existing pavement marking patterns. Existing pavement markings, which are in good condition but interfere or conflict with the newly applied marking patterns, shall be removed. Deteriorated or obscured markings that are not misleading or confusing or interfere with the adhesion of the new marking material do not require removal. New preformed and thermoplastic pavement markings shall not be applied over existing preformed or thermoplastic markings. Whenever grinding, scraping, sandblasting or other operations are performed the work must be conducted in such a manner that the finished pavement surface is not damaged or left in a pattern that is misleading or confusing. When these operations are completed the pavement surface shall be blown off with compressed air to remove residue and debris resulting from the cleaning work.

3.1.3 Cleaning Concrete Curing Compounds

On new Portland cement concrete pavements, cleaning operations shall not begin until a minimum of 30 days after the placement of concrete. All new concrete pavements shall be cleaned by either sandblasting or water blasting. When water blasting is performed, thermoplastic and preformed markings shall be applied no sooner than 24 hours after the blasting has been completed. The extent of the blasting work shall be to clean and prepare the concrete surface as follows:

a. There is no visible evidence of curing compound on the peaks of the textured concrete surface.

b. There are no heavy puddled deposits of curing compound in the valleys of the textured concrete surface.

c. All remaining curing compound is intact; all loose and flaking material is removed.

d. The peaks of the textured pavement surface are rounded in profile and free of sharp edges and irregularities.

e. The surface to be marked is dry.

3.2 APPLICATION

All pavement markings and patterns shall be placed as shown on the plans.

3.2.1 Paint

Paint shall be applied to clean, dry surfaces, and only when air and pavement temperatures are above 40 degrees F and less than 95 degrees F. Paint temperature shall be maintained within these same limits. New asphalt pavement surfaces and new Portland concrete cement shall be allowed to cure for a period of not less than 30 days before applications of paint. Paint shall be applied pneumatically with approved equipment at rate of coverage specified. The Contractor shall provide guide lines and templates as necessary to control paint application. Special precautions shall be taken in marking numbers, letters, and symbols. Edges of markings shall be sharply outlined.

3.2.1.1 Rate of Application

a. Reflective Markings: Pigmented binder shall be applied evenly to the pavement area to be coated at a rate of 105 plus or minus 5 square feet per gallon. Glass spheres shall be applied uniformly to the wet paint on airfield pavement at a rate of 8 and on road and street pavement at a rate of 6 plus or minus 0.1 pound of glass spheres per gallon of paint.

b. Nonreflective Markings: Paint shall be applied evenly to the pavement surface to be coated at a rate of 105 plus or minus 5 square feet per gallon.

3.2.1.2 Drying

The maximum drying time requirements of the paint specifications will be strictly enforced to prevent undue softening of bitumen, and pickup, displacement, or discoloration by tires of traffic. If there is a delay in drying of the markings, painting operations shall be discontinued until cause of the slow drying is determined and corrected.

3.2.2 Thermoplastic Compounds

Thermoplastic pavement markings shall be placed upon dry pavement; surface dry only will not be considered an acceptable condition. At the time of installation, the pavement surface temperature shall be a minimum of 40 degrees F and rising. Thermoplastics, as placed, shall be free from dirt or tint.

3.2.2.1 Longitudinal Markings

All centerline, skipline, edgeline, and other longitudinal type markings shall be applied with a mobile applicator. All special markings, crosswalks, stop bars, legends, arrows, and similar patterns shall be placed with a portable applicator, using the extrusion method.

3.2.2.2 Primer

After surface preparation has been completed the asphalt and/or concrete pavement surface shall be primed. The primer shall be applied with spray equipment. Primer materials shall be allowed to "set-up" prior to applying the thermoplastic composition. The asphalt concrete primer shall be allowed to dry to a tack-free condition, usually occurring in less than 10 minutes. The Portland cement concrete primer shall be allowed to dry in accordance with the thermoplastic manufacturer's recommendations. To shorten the curing time of the epoxy resins an infrared heating device may be used on the concrete primer.

a. Asphalt Concrete Primer: Primer shall be applied to all asphalt concrete pavements at a wet film thickness of 0.005 inch, plus or minus 0.001 inch (265-400 square feet per gallon).

b. Portland Cement Concrete Primer: Primer shall be applied to all concrete pavements (including concrete bridge decks) at a wet film thickness of between 0.04 to 0.05 inch (320-400 square feet per gallon).

3.2.2.3 Markings

After the primer has "set-up", the thermoplastic shall be applied at temperatures no lower than 375 degrees F nor higher than 425 degrees F at the point of deposition. Immediately after installation of the marking, drop-on glass spheres shall be mechanically applied so that the spheres are

held by and imbedded in the surface of the molten material.

a. Extruded Markings: All extruded thermoplastic markings shall be applied at the specified width and at a thickness of not less than 0.125 inch nor more than 0.190 inch.

b. Sprayed Markings: All sprayed thermoplastic markings shall be applied at the specified width and the thicknesses designated in the contract plans. If the plans do not specify a thickness, centerline markings shall be applied at a wet thickness of 0.090 inch, plus or minus 0.005 inch, and edgeline markings at a wet thickness of 0.060 inch, plus or minus 0.005 inch.

c. Reflective Glass Spheres: Immediately following application, reflective glass spheres shall be dropped onto the molten thermoplastic marking at the rate of 1 pound per 20 square feet of compound.

3.2.3 Omitted
3.2.4 Omitted

3.2.5 Reflective Media

Application of reflective media shall immediately follow application of pigmented binder. Drop-on application of glass spheres shall be accomplished to insure that reflective media is evenly distributed at the specified rate of coverage. Should there be malfunction of either paint applicator or reflective media dispenser, operations shall be discontinued immediately until deficiency is corrected.

3.3 MARKING REMOVAL

Pavement marking, including plastic tape, shall be removed in the areas shown on the drawings. Removal of marking shall be as complete as possible without damage to the surface. Aggregate shall not be exposed by the removal process. After the markings are removed, the cleaned pavement surfaces shall exhibit adequate texture for remarking as specified in paragraph SURFACE PREPARATION. Contractor shall demonstrate removal of pavement marking in an area designated by the Contracting Officer. The demonstration area will become the standard for the remainder of the work.

3.3.1 Equipment Operation

Equipment shall be controlled and operated to remove markings from the pavement surface, prevent dilution or removal of binder from underlying pavement, and prevent emission of blue smoke from asphalt or tar surfaces.

3.3.2 Cleanup and Waste Disposal

The worksite shall be kept clean of debris and waste from the removal operations. Cleanup shall immediately follow removal operations in areas subject to air traffic. Debris shall be disposed of at approved sites.

-- End of Section --

SECTION TABLE OF CONTENTS

DIVISION 02 - SITE WORK

SECTION 02936

TURF - GRASS SEEDING

PART 1 GENERAL

1.1 DESCRIPTION OF WORK
1.2 REFERENCES

PART 2 PRODUCTS

2.1 MATERIALS
2.1.1 Seed
2.1.2 Fertilizer
2.1.3 Limestone
2.1.4 Mulch
2.1.5 Asphalt Adhesive
2.1.6 Water
2.1.7 Erosion Control Materials

PART 3 EXECUTION

3.1 PREPARATION FOR PLANTING
3.2 APPLICATION
3.2.1 Planting
3.2.2 Lime and Fertilizer
3.2.3 Topdress
3.2.4 Seeding
3.2.4.1 Hydroseeding
3.2.4.2 Erosion Control Materials
3.2.5 Mulching
3.2.6 Watering
3.2.7 Protection of Seeded Areas
3.2.8 Mowing
3.3 ACCEPTANCE
3.4 QUALITY CONTROL

-- End of Section Table of Contents --

SECTION 02936

TURF - GRASS SEEDING

PART 1 GENERAL

1.1 DESCRIPTION OF WORK

This work shall consist of complete ground preparation and establishment of a permanent cover of grass on all open earth areas and all disturbed areas within the limits of construction. The work shall conform to this specification and shall be carefully coordinated with the site grading operations and erosion control work shown on the drawings and/or as covered in the specifications.

1.2 REFERENCES

The publications listed below form a part of this specification to the extent referenced. The publications are referred to in the text by basic designation only.

U.S. Department of Agriculture (USDA)

USDA	Federal Seed Act of August 9, 1939 (53 Stat. 1279) Rules and Regulations

State of North Carolina

NC	North Carolina Seed Law; North Carolina Fertilizer Law; North Carolina Lime Law

North Carolina Department of Transportation (NCDOT)

NCDOT	(1984 or Later Edition) North Carolina Department of Transportation Standard Specifications for Roads and Structures

PART 2 PRODUCTS

2.1 MATERIALS

2.1.1 Seed

Seed shall be certified to be from the latest season's crop and shall be delivered in original sealed packages bearing the producer's guaranteed analysis for percentages of mixtures and pure live seed. The producer's seed label shall show the minimum percent of pure live seed and of weed seed. Weed seed shall not be more than 1% for Bermuda, 0.5% for Bahia, Lespedeza and Rye. Seed shall be labeled in conformance with U.S. Department of Agriculture (USDA) rules and regulations under the Federal Seed Act and applicable State seed laws. Seed that has become wet, moldy, or otherwise damaged shall not be acceptable. Onsite seed mixing shall not be allowed, unless in the presence of the Quality Control Manager.

2.1.2 Fertilizer

Fertilizer shall be commercial grade, free flowing, uniform in composition and shall conform to applicable state regulations. Granular fertilizer shall conform to the North Carolina (NC) Fertilizer Law and shall bear the manufacturer's guaranteed statement of analysis. Granular fertilizer shall contain a minimum percentage by weight of 10 percent nitrogen, 20 percent phosphoric acid, and 20 percent potash. When slow release nitrogen forms are used in the fertilizer mixture, they shall be derived from sulfur-coated urea, urea formaldehyde, plastic or polymer-coated prills, or isobutylene diurea. Upon approval by the Contracting Officer, a different analysis of fertilizer may be used, provided the 1-2-2 ratio is maintained and the rate of application adjusted to provide the same amount of plant food as a 10-20-20 analysis.

2.1.3 Limestone

Agricultural-grade, dolomitic limestone meeting requirements of the North Carolina (NC) Lime Law shall be used.

2.1.4 Mulch

Mulch shall be grain straw. Straw shall be stalks from cereal grains (oats, wheat, rye or barley) that are free from noxious weeds, mold, or other objectionable materials. Straw shall be in an air-dry condition and suitable for placing with blower equipment.

2.1.5 Asphalt Adhesive

Asphalt adhesive for application with straw or hay mulch shall be grade CRS-1H or CRS-1, in accordance with current "North Carolina Department of Transportation (NCDOT) Standard Specifications for Roads and Structures."

2.1.6 Water

Water shall not contain elements toxic to plant life.

2.1.7 Erosion Control Materials

Permanent erosion control material shall be as stated on the drawings.

PART 3 EXECUTION

3.1 PREPARATION FOR PLANTING

All areas disturbed shall be tilled and hydroseeded. After the areas have been brought to the grades shown fertilizer and lime shall be tilled to a depth of at least 4 to 6 inches. Tillage shall be accomplished by plowing, disking, harrowing, by the use of rototillage machinery or other approved operations until the condition of the soil is acceptable. Undulations or irregularities in the surface shall be leveled before the next specified operation(s).

3.2 APPLICATION

3.2.1 Planting

The kinds of seed, the planting dates, and the rates of application of seed, fertilizer, and limestone shall be as stated below. All rates shown are in pounds per acre.

Bot. Name	Common Name	Rate (LB/Acre)	Percent Pure Live Seed
	PERMANENT SEEDING		
September 30 - March 1:			
Paspalum notatum	Pensacola Bahia Grass (Hulled)	50	82
Lespedeza cuneata	"Appalow" Sericea Lespedeza (Unscarified)	30	82
Cynodon dactylon	Common Bermudagrass (Hulled)	5	82
Cynodon dactylon	Common Bermudagrass (Unhulled)	5	82
Lespedeza striata	Kobe Lespedeza	5	82
Abruzzi	Rye Grain	25	99
March 1 - September 30:			
Paspalum notatum	Pensacola Bahia Grass (Hulled)	50	82
Lespedeza cuneata	"Appalow" Sericea Lespedeza (Unscarified)	30	82
Cynodon dactylon	Common Bermudagrass (Hulled)	5	82
Lespedeza striata	Kobe Lespedeza	5	82
Setaria italica	German Millet	25	82
Lime: ground agricultural limestone		2,000	
Fertilizer: 10-20-20		800	
Mulch: grain straw mulch or tack with asphalt unless applied by hydroseeder		4,000	

TEMPORARY SEEDING

March 1 - September 30:
*6

~~Setaria italica~~	~~German Millet~~	~~50~~	~~82~~
Abruzzi	Rye Grain	100	82
Lime: ground agricultural limestone		2,000	
Fertilizer: 10-20-20		800	
Mulch: grain straw mulch or tack with asphalt unless applied by hydroseeder		4,000	

September 30 - March 1:

Abruzzi	Rye Grain	120	99
Lime: ground agricultural limestone		2,000	
Fertilizer: 10-20-20		800	
Mulch: grain straw mulch, or tack with asphalt unless applied by hydroseeder		4,000	

3.2.2 Lime and Fertilizer

Add lime and fertilizer per acre just prior to planting and incorporate lime and fertilizer 4" - 6" deep in soil.

3.2.3 Topdress

After acceptance of grass, Contractor shall topdress with 50 pounds nitrogen and 50 pounds potash per acre between April 15 and October 15. Contractor shall notify Government Representative 24 hours prior to application for witnessing the top dressing operations.

3.2.4 Seeding

Seeds shall be broadcast hydroseeding equipment.

3.2.4.1 Hydroseeding

Seed and fertilizer shall be added to water and thoroughly mixed at the rates specified. Wood cellulose fiber mulch shall be added at the rates recommended by the manufacturer after the seed, fertilizer and water have been thoroughly mixed, to produce a homogeneous slurry. Slurry shall be uniformly applied under pressure over the entire area. The hydroseeded area shall not be rolled.

3.2.4.2 Erosion Control Materials

Erosion control materials shall be installed according to manufacturer's recommendation.

3.2.5 Mulching

Mulch shall be spread uniformly in areas not identified to receive temporary or permanent erosion control materials. Mulch shall be spread in a continuous blanket, using 2 tons straw per acre and apply asphalt adhesive.

3.2.6 Watering

Following seeding and mulching the seed bed will be thoroughly soaked in the top 6 inches. Daily light watering of the seeded areas during periods of no rainfall shall be done during the first 3 weeks. Moisture shall be maintained in the upper 1 inch of soil. After the seedlings germinate and develop, reduce watering to two times a week to moisten the soil to a depth of 4 inches. Watering will be in the middle of the day to the early afternoon. Apply water slowly to prevent runoff.

3.2.7 Protection of Seeded Areas

Immediately after seeding, the area shall be positively protected against traffic or other use by erecting barricades, as required.

3.2.8 Mowing

Grass will be mowed to maintain a height of 4 inches. Clippings will be removed when the amount of the cut turf is heavy enough to damage the turfed areas. Areas planted with pines and seeded shall not be mowed.

3.3 ACCEPTANCE

Proper Stand of Turf: A stand of turf is considered acceptable when the new growing sprouts are visible at the surface showing not less than 20 seedlings of permanent grass at least 2 inches long in each square foot, and where no gaps larger than 4 inches in diameter occur anywhere in the

lawn area. Permanent grass is defined as Common Bermuda, Tall Fescue and Pensacola Bahia.

3.4 QUALITY CONTROL

During construction, an established system of quality control shall be maintained. To assure compliance with contract requirements and the maintenance of records of all materials, equipment, and construction operations, quality control shall include but not be limited to the following:

Seeding -- Specified species planted at proper rates; preparation of planting bed as to thoroughness of tillage, leveling and depth of planting.

Mulching -- Types and rates of application.

Satisfactory stand of grass -- Coverage of the planted species at the end of the specified growth period, and the maintenance procedures, including supplemental fertilization.

A copy of all records and test data required herein, and the records of corrective action taken, shall be furnished the Contracting Officer.

-- End of Section --

SECTION TABLE OF CONTENTS

DIVISION 16 - ELECTRICAL

SECTION 16375A

ELECTRICAL DISTRIBUTION SYSTEM, UNDERGROUND

02/02

PART 1 GENERAL

1.1 REFERENCES
1.2 GENERAL REQUIREMENTS
1.2.1 Terminology
1.2.2 Service Conditions
1.3 SYSTEM DESCRIPTION
1.4 SUBMITTALS
1.5 DELIVERY, STORAGE, AND HANDLING
1.6 EXTRA MATERIALS

PART 2 PRODUCTS

2.1 STANDARD PRODUCT
2.2 NAMEPLATES
2.2.1 General
2.3 CORROSION PROTECTION
2.3.1 Aluminum Materials
2.3.2 Ferrous Metal Materials
2.3.2.1 Hardware
2.3.2.2 Equipment
2.4 CABLES
2.4.1 Medium-Voltage Cables
2.4.2 Low-Voltage Cables
2.4.2.1 Conductor Material
2.4.2.2 Insulation
2.4.2.3 Jackets
2.4.2.4 Omitted
2.4.2.5 In Duct
2.5 CABLE JOINTS, TERMINATIONS, AND CONNECTORS
2.5.1 Medium-Voltage Cable Joints
2.5.2 Medium-Voltage Separable Insulated Connectors
2.5.3 Low-Voltage Cable Splices
2.5.4 Terminations
2.5.4.1 Factory Preformed Type
2.5.4.2 Taped Terminations
2.6 CONDUIT AND DUCTS
2.6.1 Metallic Conduit
2.6.2 Nonmetallic Ducts
2.6.2.1 Omitted
2.6.2.2 Concrete Encased Ducts
2.6.2.3 Direct Burial
2.6.3 Conduit Sealing Compound
2.7 OMITTED
2.8 OMITTED
2.9 OMITTED
2.10 OMITTED
2.11 OMITTED

2.12 GROUNDING AND BONDING
2.12.1 Driven Ground Rods
2.12.2 Grounding Conductors
2.13 CONCRETE AND REINFORCEMENT
2.14 OMITTED
2.15 CABLE FIREPROOFING SYSTEMS
2.15.1 Fireproof Coating
2.15.2 Fireproofing Tape
2.15.3 Plastic Tape
2.16 LIQUID DIELECTRICS
2.17 OMITTED
2.18 OMITTED

PART 3 EXECUTION

3.1 GENERAL INSTALLATION REQUIREMENTS
3.1.1 Conformance to Codes
3.1.2 Verification of Dimensions
3.1.3 Disposal of Liquid Dielectrics
3.2 CABLE INSTALLATION
3.2.1 Cable Installation Plan and Procedure
3.2.1.1 Cable Inspection
3.2.1.2 Duct Cleaning
3.2.1.3 Duct Lubrication
3.2.1.4 Cable Installation
3.2.1.5 Cable Installation Plan
3.2.2 Duct Line
3.2.3 Omitted
3.2.4 Omitted
3.2.5 Electric Manholes
3.3 CABLE TERMINATIONS
3.4 FIREPROOFING
3.4.1 Tape Method
3.4.2 Sprayable Method
3.5 DUCT LINES
3.5.1 Requirements
3.5.2 Treatment
3.5.3 Concrete Encasement
3.5.4 Nonencased Direct-Burial
3.5.5 Installation of Couplings
3.5.5.1 Omitted
3.5.5.2 Plastic Duct
3.5.6 Duct Line Markers
3.6 MANHOLES, HANDHOLES, AND PULLBOXES
3.6.1 General
3.6.2 Electric Manholes
3.6.3 Omitted
3.6.4 Handholes
3.6.5 Pullboxes
3.6.6 Ground Rods
3.7 OMITTED
3.8 OMITTED
3.9 OMITTED
3.10 GROUNDING
3.10.1 Grounding Electrodes
3.10.2 Grounding and Bonding Connections
3.10.3 Grounding and Bonding Conductors
3.10.4 Surge Arrester Grounding
3.10.5 Manhole, Handhole, or Concrete Pullbox Grounding

3.10.6 Omitted
3.10.7 Riser Pole Grounding
3.11 FIELD TESTING
3.11.1 General
3.11.2 Safety
3.11.3 Ground-Resistance Tests
3.11.4 Ground Connection Inspection
3.11.5 Omitted
3.11.6 Low-Voltage Cable Test
3.11.7 Omitted
3.11.8 Omitted
3.11.9 Omitted
3.11.10 Omitted
3.11.11 Omitted
3.11.12 Pre-Energization Services
3.11.13 Operating Tests
3.12 OMITTED
3.13 ACCEPTANCE

-- End of Section Table of Contents --

UFGS-16375A (February 2002)

SECTION 16375A

ELECTRICAL DISTRIBUTION SYSTEM, UNDERGROUND
02/02

PART 1 GENERAL

1.1 REFERENCES

The publications listed below form a part of this specification to the extent referenced. The publications are referred to in the text by basic designation only.

AMERICAN NATIONAL STANDARDS INSTITUTE (ANSI)

ANSI C119.1	(1986; R 1997) Sealed Insulated Underground Connector Systems Rated 600 Volts
ANSI C80.1	(1995) Rigid Steel Conduit - Zinc Coated
ANSI O5.1	(1992) Specifications and Dimensions for Wood Poles

AMERICAN SOCIETY FOR TESTING AND MATERIALS (ASTM)

ASTM A 123/A 123M	(2001) Zinc (Hot-Dip Galvanized) Coatings on Iron and Steel Products
ASTM A 153/A 153M	(2001) Zinc Coating (Hot-Dip) on Iron and Steel Hardware
ASTM B 117	(1997) Operating Salt Spray (Fog) Apparatus
ASTM B 3	(1995) Soft or Annealed Copper Wire
ASTM B 8	(1999) Concentric-Lay-Stranded Copper Conductors, Hard, Medium-Hard, or Soft
ASTM B 800	(2000) 8000 Series Aluminum Alloy Wire for Electrical Purposes-Annealed and Intermediate Tempers
ASTM B 801	(1999) Concentric-Lay-Stranded Conductors of 8000 Series Aluminum Alloy for Subsequent Covering or Insulation
ASTM D 1654	(1992) Evaluation of Painted or Coated Specimens Subjected to Corrosive Environments
ASTM D 4059	(1996) Analysis of Polychlorinated Biphenyls in Insulating Liquids by Gas Chromatography

ASTM D 923	(1997) Sampling Electrical Insulating Liquids

FACTORY MUTUAL ENGINEERING AND RESEARCH (FM)

FM P7825a	(1998) Approval Guide Fire Protection

INSTITUTE OF ELECTRICAL AND ELECTRONICS ENGINEERS (IEEE)

IEEE C2	(1997) National Electrical Safety Code
IEEE Std 100	(1997) IEEE Standard Dictionary of Electrical and Electronics Terms
IEEE Std 386	(1995) Separable Insulated Connector Systems for Power Distribution Systems Above 600V
IEEE Std 48	(1998) Standard Test Procedures and Requirements for Alternating-Current Cable Terminations 2.5 kV through 765 kV
IEEE Std 592	(1990; R 1996) Exposed Semiconducting Shields on Premolded High Voltage Cable Joints and Separable Insulated Connectors
IEEE Std 81	(1983) Guide for Measuring Earth Resistivity, Ground Impedance, and Earth Surface Potentials of a Ground System (Part 1) \$31.00$\F

NATIONAL ELECTRICAL MANUFACTURERS ASSOCIATION (NEMA)

NEMA FB 1	(1993) Fittings, Cast Metal Boxes, and Conduit Bodies for Conduit and Cable Assemblies
NEMA TC 6	(1990) PVC and ABS Plastic Utilities Duct for Underground Installation

NATIONAL FIRE PROTECTION ASSOCIATION (NFPA)

NFPA 70	(2002) National Electrical Code

UNDERWRITERS LABORATORIES (UL)

UL 1242	(1996; Rev Mar 1998) Intermediate Metal Conduit
UL 467	(1993; Rev thru Apr 1999) Grounding and Bonding Equipment
UL 486A	(1997; Rev thru Dec 1998) Wire Connectors and Soldering Lugs for Use with Copper Conductors
UL 486B	(1997; Rev Jun 1997) Wire Connectors for

	Use with Aluminum Conductors
UL 510	(1994; Rev thru Apr 1998) Polyvinyl Chloride, Polyethylene, and Rubber Insulating Tape
UL 514A	(1996; Rev Dec 1999) Metallic Outlet Boxes
UL 6	(1997) Rigid Metal Conduit
UL 651	(1995; Rev thru Oct 1998) Schedule 40 and 80 Rigid PVC Conduit

1.2 GENERAL REQUIREMENTS

1.2.1 Terminology

Terminology used in this specification is as defined in IEEE Std 100.

1.2.2 Service Conditions

Items provided under this section shall be specifically suitable for the service conditions at Pope Air Force Base, North Carolina.

1.3 SYSTEM DESCRIPTION

The airfield shall consist of airfield taxiway lights, circuits handholes, and controls as shown on the drawings.

1.4 SUBMITTALS

Government approval is required for submittals with a "G" designation; submittals not having a "G" designation are for information only. When used, a designation following the "G" designation identifies the office that will review the submittal for the Government. The following shall be submitted in accordance with Section 01330 SUBMITTAL PROCEDURES:

SD-02 Shop Drawings

Electrical Distribution System

Detail drawings consisting of equipment drawings, illustrations, schedules, instructions, diagrams manufacturers standard installation drawings and other information necessary to define the installation and enable the Government to check conformity with the requirements of the contract drawings.

If departures from the contract drawings are deemed necessary by the Contractor, complete details of such departures shall be included with the detail drawings. Approved departures shall be made at no additional cost to the Government.

Detail drawings shall show how components are assembled, function together and how they will be installed on the project. Data and drawings for component parts of an item or system shall be coordinated and submitted as a unit. Data and drawings shall be coordinated and included in a single submission. Multiple submissions for the same equipment or system are not acceptable

except where prior approval has been obtained from the Contracting Officer. In such cases, a list of data to be submitted later shall be included with the first submission. Detail drawings shall consist of the following:

a. Detail drawings showing physical arrangement, construction details, connections, finishes, materials used in fabrication, provisions for conduit or busway entrance, access requirements for installation and maintenance, physical size, electrical characteristics, foundation and support details, and equipment weight. Drawings shall be drawn to scale and/or dimensioned. All optional items shall be clearly identified as included or excluded.

b. Internal wiring diagrams of equipment showing wiring as actually provided for this project. External wiring connections shall be clearly identified.

As-Built Drawings

The as-built drawings shall be a record of the construction as installed. The drawings shall include the information shown on the contract drawings as well as deviations, modifications, and changes from the contract drawings, however minor. The as-built drawings shall be a full sized set of prints marked to reflect deviations, modifications, and changes. The as-built drawings shall be complete and show the location, size, dimensions, part identification, and other information. Additional sheets may be added. The as-built drawings shall be jointly inspected for accuracy and completeness by the Contractor's quality control representative and by the Contracting Officer prior to the submission of each monthly pay estimate. Upon completion of the work, the Contractor shall provide three full sized sets of the marked prints to the Contracting Officer for approval. If upon review, the as-built drawings are found to contain errors and/or omissions, they will be returned to the Contractor for correction. The Contractor shall correct and return the as-built drawings to the Contracting Officer for approval within 10 calendar days from the time the drawings are returned to the Contractor.

SD-03 Product Data

Nameplates

Catalog cuts, brochures, circulars, specifications, product data, and printed information in sufficient detail and scope to verify compliance with the requirements of the contract documents.

Material and Equipment

A complete itemized listing of equipment and materials proposed for incorporation into the work. Each entry shall include an item number, the quantity of items proposed, and the name of the manufacturer of each such item.

General Installation Requirements

As a minimum, installation procedures for transformers, substations, switchgear, and medium-voltage cable terminations and splices.

Procedures shall include cable pulling plans, diagrams, instructions, and precautions required to install, adjust, calibrate, and test the devices and equipment.

SD-06 Test Reports

Factory Tests

Certified factory test reports shall be submitted when the manufacturer performs routine factory tests, including tests required by standards listed in paragraph REFERENCES. Results of factory tests performed shall be certified by the manufacturer, or an approved testing laboratory, and submitted within 7 days following successful completion of the tests. The manufacturer's pass-fail criteria for tests specified in paragraph FIELD TESTING shall be included.

Field Testing

A proposed field test plan, 20 days prior to testing the installed system. No field test shall be performed until the test plan is approved. The test plan shall consist of complete field test procedures including tests to be performed, test equipment required, and tolerance limits.

Operating Tests; G, RE

Six copies of the information described below in 8-1/2 by 11 inch binders having a minimum of three rings, including a separate section for each test. Sections shall be separated by heavy plastic dividers with tabs.

a. A list of equipment used, with calibration certifications.

b. A copy of measurements taken.

c. The dates of testing.

d. The equipment and values to be verified.

e. The condition specified for the test.

f. The test results, signed and dated.

g. A description of adjustments made.

Cable Installation; G, RE

Six copies of the information described below in 8-1/2 by 11 inch binders having a minimum of three rings from which material may readily be removed and replaced, including a separate section for each cable pull. Sections shall be separated by heavy plastic dividers with tabs, with all data sheets signed and dated by the person supervising the pull.

a. Site layout drawing with cable pulls numerically identified.

b. A list of equipment used, with calibration certifications.

The manufacturer and quantity of lubricant used on pull.

c. The cable manufacturer and type of cable.

d. The dates of cable pulls, time of day, and ambient temperature.

e. The length of cable pull and calculated cable pulling tensions.

f. The actual cable pulling tensions encountered during pull.

SD-07 Certificates

Material and Equipment

Where materials or equipment are specified to conform to the standards of the Underwriters Laboratories (UL) or to be constructed or tested, or both, in accordance with the standards of the American National Standards Institute (ANSI), the Institute of Electrical and Electronics Engineers (IEEE), or the National Electrical Manufacturers Association (NEMA), the Contractor shall submit proof that the items provided conform to such requirements. The label of, or listing by, UL will be acceptable as evidence that the items conform. Either a certification or a published catalog specification data statement, to the effect that the item is in accordance with the referenced ANSI or IEEE standard, will be acceptable as evidence that the item conforms. A similar certification or published catalog specification data statement to the effect that the item is in accordance with the referenced NEMA standard, by a company listed as a member company of NEMA, will be acceptable as evidence that the item conforms. In lieu of such certification or published data, the Contractor may submit a certificate from a recognized testing agency equipped and competent to perform such services, stating that the items have been tested and that they conform to the requirements listed, including methods of testing of the specified agencies. Compliance with above-named requirements does not relieve the Contractor from compliance with any other requirements of the specifications.

Cable Joints

A certification that contains the names and the qualifications of people recommended to perform the termination of medium-voltage cables approved for installation under this contract. The certification shall indicate that any person recommended to perform actual terminations has been adequately trained in the proper techniques and have had at least three recent years of experience in terminating the same or similar types of cables approved for installation. In addition, any person recommended by the Contractor may be required to perform a practice termination, in the presence of the Contracting Officer, before being approved as a qualified installer of medium-voltage cables. If that additional requirement is imposed, the Contractor shall provide short sections of the approved types of cables along with the approved type of termination kits, and detailed manufacturer's instruction for the proper termination of the approved cable types.

Cable Installer Qualifications

The Contractor shall provide at least one onsite person in a supervisory position with a documentable level of competency and experience to supervise all cable pulling operations. A resume shall be provided showing the cable installers' experience in the last three years, including a list of references complete with points of contact, addresses and telephone numbers.

SD-10 Operation and Maintenance Data

Electrical Distribution System

Six copies of operation and maintenance manuals, within 7 calendar days following the completion of tests and including assembly, installation, operation and maintenance instructions, spare parts data which provides supplier name, current cost, catalog order number, and a recommended list of spare parts to be stocked. Manuals shall also include data outlining detailed procedures for system startup and operation, and a troubleshooting guide which lists possible operational problems and corrective action to be taken. A brief description of all equipment, basic operating features, and routine maintenance requirements shall also be included. Documents shall be bound in a binder marked or identified on the spine and front cover. A table of contents page shall be included and marked with pertinent contract information and contents of the manual. Tabs shall be provided to separate different types of documents, such as catalog ordering information, drawings, instructions, and spare parts data. Index sheets shall be provided for each section of the manual when warranted by the quantity of documents included under separate tabs or dividers.

Three additional copies of the instructions manual shall be provided within 30 calendar days following the manuals.

1.5 DELIVERY, STORAGE, AND HANDLING

Devices and equipment shall be visually inspected by the Contractor when received and prior to acceptance from conveyance. Stored items shall be protected from the environment in accordance with the manufacturer's published instructions. Damaged items shall be replaced. Oil filled transformers and switches shall be stored in accordance with the manufacturer's requirements. Wood poles held in storage for more than 2 weeks shall be stored in accordance with ANSI O5.1. Handling of wood poles shall be in accordance with ANSI O5.1, except that pointed tools capable of producing indentations more than 1 inch in depth shall not be used. Metal poles shall be handled and stored in accordance with the manufacturer's instructions.

1.6 EXTRA MATERIALS

One additional spare fuse or fuse element for each furnished fuse or fuse element shall be delivered to the contracting officer when the electrical system is accepted. Two complete sets of all special tools required for maintenance shall be provided, complete with a suitable tool box. Special tools are those that only the manufacturer provides, for special purposes (to access compartments, or operate, adjust, or maintain special parts).

PART 2 PRODUCTS

2.1 STANDARD PRODUCT

Material and equipment shall be the standard product of a manufacturer regularly engaged in the manufacture of the product and shall essentially duplicate items that have been in satisfactory use for at least 2 years prior to bid opening. Items of the same classification shall be identical including equipment, assemblies, parts, and components.

2.2 NAMEPLATES

2.2.1 General

Each major component of this specification shall have the manufacturer's name, address, type or style, model or serial number, and catalog number on a nameplate securely attached to the equipment. Nameplates shall be made of noncorrosive metal. Equipment containing liquid dielectrics shall have the type of dielectric on the nameplate. Sectionalizer switch nameplates shall have a schematic with all switch positions shown and labeled. As a minimum, nameplates shall be provided for transformers, circuit breakers, meters, switches, and switchgear.

2.3 CORROSION PROTECTION

2.3.1 Aluminum Materials

Aluminum shall not be used in contact with earth or concrete. Where aluminum conductors are connected to dissimilar metal, fittings conforming to UL 486B shall be used.

2.3.2 Ferrous Metal Materials

2.3.2.1 Hardware

Ferrous metal hardware shall be hot-dip galvanized in accordance with ASTM A 153/A 153M and ASTM A 123/A 123M.

2.3.2.2 Equipment

Equipment and component items, including but not limited to transformer stations and ferrous metal luminaries not hot-dip galvanized or porcelain enamel finished, shall be provided with corrosion-resistant finishes which shall withstand 480 hours of exposure to the salt spray test specified in ASTM B 117 without loss of paint or release of adhesion of the paint primer coat to the metal surface in excess of 1/16 inch from the test mark. The scribed test mark and test evaluation shall be in accordance with ASTM D 1654 with a rating of not less than 7 in accordance with TABLE 1, (procedure A). Cut edges or otherwise damaged surfaces of hot-dip galvanized sheet steel or mill galvanized sheet steel shall be coated with a zinc rich paint conforming to the manufacturer's standard.

2.4 CABLES

Cables shall be single conductor type unless otherwise indicated.

2.4.1 Medium-Voltage Cables

Cable shall be as specified in Section 16526AIRFIELD AND HELIPORT LIGHTING

AND VISUAL NAVIGATION AIDS.

2.4.2 Low-Voltage Cables

Cables shall be rated 600 volts and shall conform to the requirements of NFPA 70, and must be UL listed for the application or meet the applicable section of either ICEA or NEMA standards.

2.4.2.1 Conductor Material

Underground cables shall be annealed copper complying with ASTM B 3 and ASTM B 8 or Type AA-8000 aluminum conductors complying with ASTM B 800 and ASTM B 801. Intermixing of copper and aluminum conductors is not permitted.

2.4.2.2 Insulation

Insulation must be in accordance with NFPA 70, and must be UL listed for the application or meet the applicable sections of either ICEA, or NEMA standards.

2.4.2.3 Jackets

Multiconductor cables shall have an overall PVC outer jacket.

2.4.2.4 Omitted

2.4.2.5 In Duct

Cables shall be single-conductor cable, in accordance with NFPA 70.

2.5 CABLE JOINTS, TERMINATIONS, AND CONNECTORS

2.5.1 Medium-Voltage Cable Joints

Medium-voltage cable joints shall not be allowed.

2.5.2 Medium-Voltage Separable Insulated Connectors

Separable insulated connectors shall comply with IEEE Std 386 and IEEE Std 592 and shall be of suitable construction or standard splice kits shall be used. Separable insulated connectors are acceptable for voltages up to 35 kV. Connectors shall be of the loadbreak type as indicated, of suitable construction for the application and the type of cable connected, and shall include cable shield adaptors. Separable insulated connectors shall not be used as substitutes for conventional permanent splices. External clamping points and test points shall be provided.

2.5.3 Low-Voltage Cable Splices

Low-voltage cable splices and terminations shall be rated at not less than 600 Volts. Splices in conductors No. 10 AWG and smaller shall be made with an insulated, solderless, pressure type connector, conforming to the applicable requirements of UL 486A. Splices in conductors No. 8 AWG and larger shall be made with noninsulated, solderless, pressure type connector, conforming to the applicable requirements of UL 486A and UL 486B. Splices shall then be covered with an insulation and jacket material equivalent to the conductor insulation and jacket. Splices below grade or in wet locations shall be sealed type conforming to ANSI C119.1 or shall be waterproofed by a sealant-filled, thick wall, heat shrinkable,

thermosetting tubing or by pouring a thermosetting resin into a mold that surrounds the joined conductors.

2.5.4 Terminations

Terminations shall be in accordance with IEEE Std 48, Class 1 or Class 2; of the molded elastomer, wet-process porcelain, prestretched elastomer, heat-shrinkable elastomer, or taped type. Acceptable elastomers are track-resistant silicone rubber or track-resistant ethylene propylene compounds, such as ethylene propylene rubber or ethylene propylene diene monomer. Separable insulated connectors may be used for apparatus terminations, when such apparatus is provided with suitable bushings. Terminations shall be of the outdoor type, except that where installed inside outdoor equipment housings which are sealed against normal infiltration of moisture and outside air, indoor, Class 2 terminations are acceptable. Class 3 terminations are not acceptable. Terminations, where required, shall be provided with mounting brackets suitable for the intended installation and with grounding provisions for the cable shielding, metallic sheath, and armor.

2.5.4.1 Factory Preformed Type

Molded elastomer, wet-process porcelain, prestretched, and heat-shrinkable terminations shall utilize factory preformed components to the maximum extent practicable rather than tape build-up. Terminations shall have basic impulse levels as required for the system voltage level. Leakage distances shall comply with wet withstand voltage test requirements of IEEE Std 48 for the next higher Basic Insulation Level (BIL) level. Anti-tracking tape shall be applied over exposed insulation of preformed molded elastomer terminations.

2.5.4.2 Taped Terminations

Taped terminations shall use standard termination kits providing terminal connectors, field-fabricated stress cones, and rain hoods. Terminations shall be at least 20 inches long from the end of the tapered cable jacket to the start of the terminal connector, or not less than the kit manufacturer's recommendations, whichever is greater.

2.6 CONDUIT AND DUCTS

Medium voltage duct lines shall be concrete-encased, thin-wall type unless otherwise indicated. Low-voltage lines or communication lines run elsewhere may be direct-burial, thick-wall type unless otherwise indicated.

2.6.1 Metallic Conduit

Intermediate metal conduit shall comply with UL 1242. Rigid galvanized steel conduit shall comply with UL 6 and ANSI C80.1. Metallic conduit fittings and outlets shall comply with UL 514A and NEMA FB 1.

2.6.2 Nonmetallic Ducts

2.6.2.1 Omitted

2.6.2.2 Concrete Encased Ducts

UL 651 Schedule 40 or NEMA TC 6 Type EB.

2.6.2.3 Direct Burial

UL 651 Schedule 40 and Schedule 80, or NEMA TC 6 Type DB.

2.6.3 Conduit Sealing Compound

Compounds for sealing ducts and conduit shall have a putty-like consistency workable with the hands at temperatures as low as 35 degrees F, shall neither slump at a temperature of 300 degrees F, nor harden materially when exposed to the air. Compounds shall adhere to clean surfaces of fiber or plastic ducts; metallic conduits or conduit coatings; concrete, masonry, or lead; any cable sheaths, jackets, covers, or insulation materials; and the common metals. Compounds shall form a seal without dissolving, noticeably changing characteristics, or removing any of the ingredients. Compounds shall have no injurious effect upon the hands of workmen or upon materials.

2.7 OMITTED
2.8 OMITTED
2.9 OMITTED
2.10 OMITTED
2.11 OMITTED

2.12 GROUNDING AND BONDING

2.12.1 Driven Ground Rods

Ground rods shall be copper-clad steel conforming to UL 467 not less than 3/4 inch in diameter by 10 feet in length. Sectional type rods shall be used.

2.12.2 Grounding Conductors

Grounding conductors shall be bare, except where installed in conduit with associated phase conductors. Insulated conductors shall be of the same material as phase conductors and green color-coded, except that conductors shall be rated no more than 600 volts. Bare conductors shall be ASTM B 8 soft-drawn unless otherwise indicated. Aluminum is not acceptable.

2.13 CONCRETE AND REINFORCEMENT

Concrete work shall have minimum 3000 psi compressive strength and conform to the requirements of Section 02753 CONCRETE PAVEMENT FOR AIRFIELDS AND OTHER HEAVY-DUTY PAVEMENT. Concrete reinforcing shall be as specified in Section 02753 CONCRETE PAVEMENT FOR AIRFIELDS AND OTHER HEAVY-DUTY PAVEMENT.

2.14 OMITTED

2.15 CABLE FIREPROOFING SYSTEMS

Cable fireproofing systems shall be listed in FM P7825a as a fire-protective coating or tape approved for grouped electrical conductors and shall be suitable for application on the type of medium-voltage cables provided. After being fully cured, materials shall be suitable for use where exposed to oil, water, gases, salt water, sewage, and fungus and shall not damage cable jackets or insulation. Asbestos materials are not acceptable.

2.15.1 Fireproof Coating

Cable fireproofing coatings shall be compounded of water-based thermoplastic resins, flame-retardant chemicals, and inorganic noncombustible fibers and shall be suitable for the application methods used. Coatings applied on bundled cables shall have a derating factor of less than 5 percent, and a dielectric strength of 95 volts per mil minimum after curing.

2.15.2 Fireproofing Tape

Fireproofing tape shall be at least 2 inches wide and shall be a flexible, conformable, polymeric, elastomer tape designed specifically for fireproofing cables.

2.15.3 Plastic Tape

Preapplication plastic tape shall be pressure sensitive, 10 mil thick, conforming to UL 510.

2.16 LIQUID DIELECTRICS

Liquid dielectrics for transformers, capacitors, reclosers, and other liquid-filled electrical equipment shall be non-polychlorinated biphenyl (PCB) mineral-oil or less-flammable liquid as specified. Nonflammable fluids shall not be used. Tetrachloroethylene (perchloroethylene) and 1, 2, 4 trichlorobenzene fluids shall not be used. Liquid dielectrics in retrofitted equipment shall be certified by the manufacturer as having less than 50 parts per million (ppm) PCB content. In lieu of the manufacturer's certification, the Contractor may submit a test sample of the dielectric in accordance with ASTM D 923 and have tests performed per ASTM D 4059 at a testing facility approved by the Contracting Officer. Equipment with test results indicating PCB level exceeding 50 ppm shall be replaced.

2.17 OMITTED
2.18 OMITTED

PART 3 EXECUTION

3.1 GENERAL INSTALLATION REQUIREMENTS

Equipment and devices shall be installed and energized in accordance with the manufacturer's published instructions. Except as covered herein, excavation, trenching, and backfilling shall conform to the requirements of Section 02316A EXCAVATION, TRENCHING, AND BACKFILLING FOR UTILITIES SYSTEMS. Concrete work shall have minimum 3000 psi compressive strength and conform to the requirements of Section 02753 CONCRETE PAVEMENT FOR AIRFIELDS AND OTHER HEAVY-DUTY PAVEMENT.

3.1.1 Conformance to Codes

The installation shall comply with the requirements and recommendations of NFPA 70 and IEEE C2 as applicable.

3.1.2 Verification of Dimensions

The Contractor shall become familiar with details of the work, shall verify dimensions in the field, and shall advise the Contracting Officer of any discrepancy before performing any work.

3.1.3 Disposal of Liquid Dielectrics

PCB-contaminated dielectrics must be marked as PCB and transported to and incinerated by an approved EPA waste disposal facility. The Contractor shall furnish certification of proper disposal. Contaminated dielectrics shall not be diluted to lower the contamination level.

3.2 CABLE INSTALLATION

The Contractor shall obtain from the manufacturer an installation manual or set of instructions which addresses such aspects as cable construction, insulation type, cable diameter, bending radius, cable temperature, lubricants, coefficient of friction, conduit cleaning, storage procedures, moisture seals, testing for and purging moisture, etc. The Contractor shall then prepare a checklist of significant requirements and perform pulling calculations and prepare a pulling plan which shall be submitted along with the manufacturers instructions in accordance with SUBMITTALS.

3.2.1 Cable Installation Plan and Procedure

Cable shall be installed strictly in accordance with the cable manufacturer's recommendations. Each circuit shall be identified by means of a fiber, laminated plastic, or non-ferrous metal tags, or approved equal, in each manhole, handhole, junction box, and each terminal. Each tag shall contain the following information; cable type, conductor size, circuit number, circuit voltage, cable destination and phase identification.

3.2.1.1 Cable Inspection

The cable reel shall be inspected for correct storage positions, signs of physical damage, and broken end seals. If end seal is broken, moisture shall be removed from cable in accordance with the cable manufacturer's recommendations.

3.2.1.2 Duct Cleaning

Duct shall be cleaned with an assembly that consists of a flexible mandrel (manufacturers standard product in lengths recommended for the specific size and type of duct) that is 1/4 inch less than inside diameter of duct, 2 wire brushes, and a rag. The cleaning assembly shall be pulled through conduit a minimum of 2 times or until less than a volume of 8 cubic inches of debris is expelled from the duct.

3.2.1.3 Duct Lubrication

The cable lubricant shall be compatible with the cable jacket for cable that is being installed. Application of lubricant shall be in accordance with lubricant manufacturer's recommendations.

3.2.1.4 Cable Installation

The Contractor shall provide a cable feeding truck and a cable pulling winch as required. The Contractor shall provide a pulling grip or pulling eye in accordance with cable manufacturer's recommendations. The pulling grip or pulling eye apparatus shall be attached to polypropylene or manilla rope followed by lubricant front end packs and then by power cables. A dynamometer shall be used to monitor pulling tension. Pulling tension shall not exceed cable manufacturer's recommendations. The Contractor shall not allow cables to cross over while cables are being fed into duct. For cable installation in cold weather, cables shall be kept at 50 degrees F

temperature for at least 24 hours before installation.

3.2.1.5 Cable Installation Plan

The Contractor shall submit a cable installation plan for all cable pulls in accordance with the detail drawings portion of paragraph SUBMITTALS. Cable installation plan shall include:

a. Site layout drawing with cable pulls identified in numeric order of expected pulling sequence and direction of cable pull.

b. List of cable installation equipment.

c. Lubricant manufacturer's application instructions.

d. Procedure for resealing cable ends to prevent moisture from entering cable.

e. Cable pulling tension calculations of all cable pulls.

f. Cable percentage conduit fill.

g. Cable sidewall thrust pressure.

h. Cable minimum bend radius and minimum diameter of pulling wheels used.

i. Cable jam ratio.

j. Maximum allowable pulling tension on each different type and size of conductor.

k. Maximum allowable pulling tension on pulling device.

3.2.2 Duct Line

Cables shall be installed in duct lines where indicated. Cable splices in low-voltage cables shall be made in handholes and pull boxes only, except as otherwise noted. Neutral and grounding conductors shall be installed in the same duct with their associated phase conductors.

3.2.3 Omitted
3.2.4 Omitted

3.2.5 Electric Manholes

Cables shall be routed around the interior walls and securely supported from walls on cables racks. Cable routing shall minimize cable crossover, provide access space for maintenance and installation of additional cables, and maintain cable separation in accordance with IEEE C2.

3.3 CABLE TERMINATIONS

Medium-voltage cable terminations shall be made by qualified cable splicers only. Qualifications of cable splicers shall be submitted in accordance with paragraph SUBMITTALS.

3.4 FIREPROOFING

Each medium-voltage cable and conductor in manholes shall be fire-proofed for their entire length within the manhole. Where cables and conductors have been lubricated to enhance pulling into ducts, the lubricant shall be removed from cables and conductors exposed in the manhole before fireproofing. Fire-stops shall be installed in each conduit entering or leaving a manhole.

3.4.1 Tape Method

Before application of fireproofing tape, plastic tape wrapping shall be applied over exposed metallic items such as the cable ground wire, metallic outer covering, or armor to minimize the possibility of corrosion from the fireproofing materials and moisture. Before applying fireproofing tape, irregularities of cables, such as at cable joints, shall be evened out with insulation putty. A flexible conformable polymeric elastomer fireproof tape shall be wrapped tightly around each cable spirally in 1/2 lapped wrapping or in 2 butt-jointed wrappings with the second wrapping covering the joints of the first.

3.4.2 Sprayable Method

Manholes shall be power ventilated until coatings are dry and dewatered and the coatings are cured. Ventilation requirements shall be in accordance with the manufacturer's instruction, but not less than 10 air changes per hour shall be provided. Cable coatings shall be applied by spray, brush, or glove to a wet film thickness that reduces to the dry film thickness approved for fireproofing by FM P7825a. Application methods and necessary safety precautions shall be in accordance with the manufacturers instructions. After application, cable coatings shall be dry to the touch in 1 to 2 hours and fully cured in 48 hours, except where the manufacturer has stated that because of unusual humidity or temperature, longer periods may be necessary.

3.5 DUCT LINES

3.5.1 Requirements

Numbers and sizes of ducts shall be as indicated. Duct lines shall be laid with a minimum slope of 4 inches per 100 feet. Depending on the contour of the finished grade, the high-point may be at a terminal, a manhole, a handhole, or between manholes or handholes. Short-radius manufactured 90-degree duct bends may be used only for pole or equipment risers, unless specifically indicated as acceptable. The minimum manufactured bend radius shall be 18 inches for ducts of less than 3-inch diameter, and 36 inches for ducts 3 inches or greater in diameter. Otherwise, long sweep bends having a minimum radius of 25 feet shall be used for a change of direction of more than 5 degrees, either horizontally or vertically. Both curved and straight sections may be used to form long sweep bends, but the maximum curve used shall be 30 degrees and manufactured bends shall be used. Ducts shall be provided with end bells whenever duct lines terminate in manholes or handholes.

3.5.2 Treatment

Ducts shall be kept clean of concrete, dirt, or foreign substances during construction. Field cuts requiring tapers shall be made with proper tools and match factory tapers. A coupling recommended by the duct manufacturer shall be used whenever an existing duct is connected to a duct of different material or shape. Ducts shall be stored to avoid warping and

deterioration with ends sufficiently plugged to prevent entry of any water or solid substances. Ducts shall be thoroughly cleaned before being laid. Plastic ducts shall be stored on a flat surface and protected from the direct rays of the sun.

3.5.3 Concrete Encasement

Ducts requiring concrete encasements shall comply with NFPA 70, except that electrical duct bank configurations for ducts 6 inches in diameter shall be determined by calculation and as shown on the drawings. The separation between adjacent electric power and communication ducts shall be no less than indicated, but shall conform to IEEE C2. Duct line encasements shall be monolithic construction. Where a connection is made to a previously poured encasement, the new encasement shall be well bonded or doweled to the existing encasement. The Contractor shall submit proposed bonding method for approval in accordance with the detail drawing portion of paragraph SUBMITTALS. At any point, except airfield crossings, tops of concrete encasements shall be not less than the cover requirements listed in NFPA 70. At airfield crossings, duct lines shall be encased with concrete and reinforced as indicated to withstand specified surface loadings. Tops of concrete encasements shall be not less than 5 feet below tops of airfield paving unless otherwise indicated. Where ducts are jacked under existing pavement or through tree drip lines, rigid steel conduit will be installed. To protect the corrosion-resistant conduit coating, predrilling or installing conduit inside a larger iron pipe sleeve (jack-and-sleeve) is required. For crossings of existing airfield pavements greater than 50 feet in length, the predrilling method or the jack-and-sleeve method will be used. Separators or spacing blocks shall be made of steel, concrete, plastic, or a combination of these materials placed not farther apart than 4 feet on centers. Ducts shall be securely anchored to prevent movement during the placement of concrete and joints shall be staggered at least 6 inches vertically.

3.5.4 Nonencased Direct-Burial

Top of duct lines shall be below the frost line depth but not less than 24 inches below finished grade and shall be installed with a minimum of 3 inches of earth around each duct, except that between adjacent electric power and communication ducts, 12 inches of earth is required. Bottoms of trenches shall be graded toward manholes or handholes and shall be smooth and free of stones, soft spots, and sharp objects. Where bottoms of trenches comprise materials other than sand, a 3-inch layer of sand shall be laid first and compacted to approximate densities of surrounding firm soil before installing ducts. Joints in adjacent tiers of duct shall be vertically staggered at least 6 inches. The first 6 inch layer of backfill cover shall be sand compacted as previously specified. The rest of the excavation shall be backfilled and compacted in 3- to 6-inch layers. Duct banks may be held in alignment with earth. However, high-tiered banks shall use a wooden frame or equivalent form to hold ducts in alignment prior to backfilling.

3.5.5 Installation of Couplings

Joints in each type of duct shall be made up in accordance with the manufacturer's recommendations for the particular type of duct and coupling selected and as approved.

3.5.5.1 Omitted

3.5.5.2 Plastic Duct

Duct joints shall be made by brushing a plastic solvent cement on insides of plastic coupling fittings and on outsides of duct ends. Each duct and fitting shall then be slipped together with a quick one-quarter turn twist to set the joint tightly.

3.5.6 Duct Line Markers

Duct line markers shall be provided at the ends of long duct line stubouts or for other ducts whose locations are indeterminate because of duct curvature or terminations at completely below-grade structures. In addition to markers, a 5 mil brightly colored plastic tape, not less than 3 inches in width and suitably inscribed at not more than 10 feet on centers with a continuous metallic backing and a corrosion-resistant 1 mil metallic foil core to permit easy location of the duct line, shall be placed approximately 12 inches below finished grade levels of such lines.

3.6 MANHOLES, HANDHOLES, AND PULLBOXES

3.6.1 General

Manholes shall be constructed approximately where shown. The exact location of each manhole shall be determined after careful consideration has been given to the location of other utilities, grading, and paving. The location of each manhole shall be approved by the Contracting Officer before construction of the manhole is started. Manholes shall be the type noted on the drawings and shall be constructed in accordance with the applicable details as indicated. Top, walls, and bottom shall consist of reinforced concrete. Walls and bottom shall be of monolithic concrete construction. The Contractor may at his option utilize monolithically constructed precast-concrete manholes having the required strength and inside dimensions as required by the drawings or specifications. In paved areas, frames and covers for manhole and handhole entrances in vehicular traffic areas shall be flush with the finished surface of the paving. In unpaved areas, the top of manhole covers shall be approximately 1/2 inch above the finished grade. Where existing grades that are higher than finished grades are encountered, concrete assemblies designed for the purpose shall be installed to elevate temporarily the manhole cover to existing grade level. All duct lines entering manholes must be installed on compact soil or otherwise supported when entering a manhole to prevent shear stress on the duct at the point of entrance to the manhole. Duct lines entering cast-in-place concrete manholes shall be cast in-place with the manhole. Duct lines entering precast concrete manholes through a precast knockout penetration shall be grouted tight with a portland cement mortar. PVC duct lines entering precast manholes through a PVC endbell shall be solvent welded to the endbell. A cast metal grille-type sump frame and cover shall be installed over the manhole sump. A cable-pulling iron shall be installed in the wall opposite each duct line entrance. Aircraft rated manholes shall be used where indicated.

3.6.2 Electric Manholes

Cables shall be securely supported from walls by hot-dip galvanized cable racks with a plastic coating over the galvanizing and equipped with adjustable hooks and insulators. The number of cable racks indicated shall be installed in each manhole and not less than two spare hooks shall be installed on each cable rack. Insulators shall be made of high-glazed porcelain. Insulators will not be required on spare hooks.

3.6.3 Omitted

3.6.4 Handholes

Handholes shall be located approximately as shown. Handholes shall be of the type noted on the drawings and shall be constructed in accordance with the details shown.

3.6.5 Pullboxes

Pullbox tops shall be flush with sidewalks or curbs or placed 1/2 inch above surrounding grades when remote from curbed roadways or sidewalks. Covers shall be marked "Low-Voltage" or as indicated and provided with two lifting eyes and two hold-down bolts. Each box shall have a suitable opening for a ground rod. Conduit, cable, ground rod entrances, and unused openings shall be sealed with mortar.

3.6.6 Ground Rods

A ground rod shall be installed at the manholes, handholes and pullboxes. Ground rods shall be driven into the earth before the manhole floor is poured so that approximately 4 inches of the ground rod will extend above the manhole floor. When precast concrete manholes are used, the top of the ground rod may be below the manhole floor and a No. 1/0 AWG ground conductor brought into the manhole through a watertight sleeve in the manhole wall.

3.7 OMITTED
3.8 OMITTED
3.9 OMITTED

3.10 GROUNDING

A ground ring consisting of the indicated configuration of bare copper conductors and driven ground rods shall be installed around pad-mounted equipment as shown. Equipment frames of metal-enclosed equipment, and other noncurrent-carrying metal parts, such as cable shields, cable sheaths and armor, and metallic conduit shall be grounded. At least two connections shall be provided from a transformer, cable terminating cabinet, and a primary switch to the ground ring. Metallic frames and covers of handholes and pull boxes shall be grounded by use of a braided, copper ground strap with equivalent ampacity of No. 6 AWG.

3.10.1 Grounding Electrodes

Grounding electrodes shall be installed as shown on the drawings and as follows:

a. Driven rod electrodes - Unless otherwise indicated, ground rods shall be driven into the earth until the tops of the rods are approximately 1 foot below finished grade.

b. Omitted.

c. Ground ring - A ground ring shall be installed as shown consisting of bare copper conductors installed 18 inches, plus or minus 3 inches, below finished top of soil grade. Ground ring conductors shall be sized as shown or No. 2 AWG, minimum when not shown.

d. Additional electrodes - When the required ground resistance is not met, additional electrodes shall be provided interconnected with grounding conductors to achieve the specified ground resistance. The additional electrodes will be up to three 10-foot rods spaced a minimum of 12 feet apart driven perpendicular to grade. In high ground resistance, UL listed chemically charged ground rods may be used. If the resultant resistance exceeds 25 ohms measured not less than 48 hours after rainfall, the Contracting Officer shall be notified immediately.

3.10.2 Grounding and Bonding Connections

Connections above grade shall be made by the fusion-welding process or with bolted solderless connectors, in compliance with UL 467, and those below grade shall be made by a fusion-welding process. Where grounding conductors are connected to aluminum-composition conductors, specially treated or lined copper-to-aluminum connectors suitable for this purpose shall be used.

3.10.3 Grounding and Bonding Conductors

Grounding and bonding conductors include conductors used to bond transformer enclosures and equipment frames to the grounding electrode system. Grounding and bonding conductors shall be sized as shown, and located to provide maximum physical protection. Bends greater than 45 degrees in ground conductors are not permitted. Routing of ground conductors through concrete shall be avoided. When concrete penetration is necessary, nonmetallic conduit shall be cast flush with the points of concrete entrance and exit so as to provide an opening for the ground conductor, and the opening shall be sealed with a suitable compound after installation.

3.10.4 Surge Arrester Grounding

Surge arresters and neutrals shall be bonded directly to the transformer enclosure and then to the grounding electrode system with a bare copper conductor, sized as shown. Lead lengths shall be kept as short as practicable with no kinks or sharp bends.

3.10.5 Manhole, Handhole, or Concrete Pullbox Grounding

Ground rods installed in manholes, handholes, or concrete pullboxes shall be connected to cable racks, cable-pulling irons, the cable shielding, metallic sheath, and armor at each cable joint or splice by means of a No. 4 AWG braided tinned copper wire. Connections to metallic cable sheaths shall be by means of tinned terminals soldered to ground wires and to cable sheaths. Care shall be taken in soldering not to damage metallic cable sheaths or shields. Ground rods shall be protected with a double wrapping of pressure-sensitive plastic tape for a distance of 2 inches above and 6 inches below concrete penetrations. Grounding electrode conductors shall be neatly and firmly attached to manhole or handhole walls and the amount of exposed bare wire shall be held to a minimum.

3.10.6 Omitted

3.10.7 Riser Pole Grounding

A single continuous vertical grounding electrode conductor shall be

installed on each riser pole and connected directly to the grounding electrodes indicated on the drawings or required by these specifications. All equipment, neutrals, surge arresters, and items required to be grounded shall be connected directly to this vertical conductor. The grounding electrode conductor shall be sized as shown. Grounding electrode conductors shall be stapled to wood poles at intervals not exceeding2 feet.

3.11 FIELD TESTING

3.11.1 General

Field testing shall be performed in the presence of the Contracting Officer. The Contractor shall notify the Contracting Officer 30 days prior to conducting tests. The Contractor shall furnish all materials, labor, and equipment necessary to conduct field tests. The Contractor shall perform all tests and inspections recommended by the manufacturer unless specifically waived by the Contracting Officer. The Contractor shall maintain a written record of all tests which includes date, test performed, personnel involved, devices tested, serial number and name of test equipment, and test results. Field test reports shall be signed and dated by the Contractor.

3.11.2 Safety

The Contractor shall provide and use safety devices such as rubber gloves, protective barriers, and danger signs to protect and warn personnel in the test vicinity. The Contractor shall replace any devices or equipment which are damaged due to improper test procedures or handling.

3.11.3 Ground-Resistance Tests

The resistance of each grounding electrode and each ground ring shall be measured using the fall-of-potential method defined in IEEE Std 81. Ground resistance measurements shall be made before the electrical distribution system is energized and shall be made in normally dry conditions not less than 48 hours after the last rainfall. Resistance measurements of separate grounding electrode systems shall be made before the systems are bonded together below grade. The combined resistance of separate systems may be used to meet the required resistance, but the specified number of electrodes must still be provided.

a. Single rod electrode - 25 ohms.

b. Multiple rod electrodes - 25 ohms.

c. Omitted.

d. Ground ring - 25 ohms.

3.11.4 Ground Connection Inspection

All below-grade ground connections will be visually inspected by the Contracting Officer before backfilling. The Contractor shall notify the Contracting Officer 8 hours before the site is ready for inspection.

3.11.5 Omitted

3.11.6 Low-Voltage Cable Test

Low-voltage cable, complete with splices, shall be tested for insulation resistance after the cables are installed, in their final configuration, ready for connection to the equipment, and prior to energization. The test voltage shall be 500 volts dc, applied for one minute between each conductor and ground and between all possible combinations conductors in the same trench, duct, or cable, with all other conductors in the same trench, duct, or conduit. The minimum value of insulation shall be:

R in megohms = (rated voltage in kV + 1) x 1000/(length of cable in feet

Each cable failing this test shall be repaired or replaced. The repaired cable shall be retested until failures have been eliminated.

3.11.7 Omitted
3.11.8 Omitted
3.11.9 Omitted
3.11.10 Omitted
3.11.11 Omitted

3.11.12 Pre-Energization Services

Calibration, testing, adjustment, and placing into service of the installation shall be accomplished by a manufacturer's product field service engineer or independent testing company with a minimum of 2 years of current product experience. The following services shall be performed on the equipment listed below. These services shall be performed subsequent to testing but prior to the initial energization. The equipment shall be inspected to ensure that installation is in compliance with the recommendations of the manufacturer and as shown on the detail drawings. Terminations of conductors at major equipment shall be inspected to ensure the adequacy of connections. Bare and insulated conductors between such terminations shall be inspected to detect possible damage during installation. If factory tests were not performed on completed assemblies, tests shall be performed after the installation of completed assemblies. Components shall be inspected for damage caused during installation or shipment to ensure packaging materials have been removed. Components capable of being both manually and electrically operated shall be operated manually prior to the first electrical operation. Components capable of being calibrated, adjusted, and tested shall be calibrated, adjusted, and tested in accordance with the instructions of the equipment manufacturer.

3.11.13 Operating Tests

After the installation is completed, and at such times as the Contracting Officer may direct, the Contractor shall conduct operating tests for approval. The equipment shall be demonstrated to operate in accordance with the requirements herein. An operating test report shall be submitted in accordance with paragraph SUBMITTALS.

3.12 OMITTED

3.13 ACCEPTANCE

Final acceptance of the facility will not be given until the Contractor has successfully completed all tests and after all defects in installation, material or operation have been corrected.

-- End of Section --

SECTION TABLE OF CONTENTS

DIVISION 16 - ELECTRICAL

SECTION 16526A

AIRFIELD AND HELIPORT LIGHTING AND VISUAL NAVIGATION AIDS

08/01

PART 1 GENERAL

1.1 REFERENCES
1.2 GENERAL REQUIREMENTS
1.2.1 Code Compliance
1.2.2 Standard Product
1.2.3 Prevention of Corrosion
1.2.3.1 Metallic Materials
1.2.3.2 Ferrous Metal Hardware
1.2.3.3 Luminaires Fabricated from Ferrous Metals
1.2.4 Unusual Service Conditions
1.2.4.1 Omitted
1.2.4.2 Other
1.2.5 Verification of Dimensions
1.2.6 Existing Lighting Circuit Operation
1.3 SYSTEM DESCRIPTION
1.4 SUBMITTALS

PART 2 PRODUCTS

2.1 MATERIALS
2.1.1 Electrical Tape
2.1.2 Nameplates
2.1.3 Conduit, Conduit Fittings, and Boxes
2.1.3.1 Rigid Steel or Intermediate Metal Conduit (IMC) and Fittings
2.1.3.2 Flexible Metal Conduit
2.1.3.3 Outlet Boxes for Use with Steel Conduit, Rigid or Flexible
2.1.3.4 Plastic Duct for Concrete Encased Burial
2.1.3.5 Plastic Conduit for Direct Burial
2.1.3.6 Frangible Couplings and Adapters
2.1.4 Wire and Cable
2.1.4.1 Conductor Sizes
2.1.4.2 Omitted
2.1.4.3 Omitted
2.1.4.4 Wire and Cable for Airfield and Heliport Lighting Systems
2.1.4.5 Cable Tags
2.1.4.6 Concrete Markers for Direct Buried Cable Systems
2.1.5 Ground Rods
2.1.6 Omitted
2.1.7 Omitted
2.1.8 Cable Connectors and Splices
2.1.9 Transformers
2.1.9.1 Encapsulated Isolation Transformers
2.1.10 Light Bases
2.1.10.1 Accessories
2.1.11 Sealant for Fixtures and Wires in Drilled Holes or Saw Kerfs
2.1.12 Omitted
2.1.13 Lamps and Filters

2.1.14 Omitted
2.1.15 Omitted
2.1.16 Omitted
2.1.17 Omitted
2.1.18 Omitted
2.1.19 Omitted
2.1.20 Omitted
2.1.21 Lighting Fixtures
2.2 OMITTED
2.3 OMITTED
2.4 OMITTED
2.5 OMITTED
2.6 OMITTED
2.7 OMITTED
2.8 OMITTED
2.9 OMITTED
2.10 OMITTED
2.11 OMITTED
2.12 TAXIWAY LIGHTING SYSTEMS
2.12.1 Taxiway Edge Lights
2.12.2 Omitted
2.12.3 Taxiway Guidance Signs
2.12.4 Hold Position Lights and Signs
2.13 OMITTED
2.14 OMITTED
2.15 OMITTED
2.16 OMITTED
2.17 OMITTED
2.18 OMITTED
2.19 FACTORY COATINGS

PART 3 EXECUTION

3.1 GENERAL INSTALLATION REQUIREMENTS
3.2 CABLES, GENERAL REQUIREMENTS
3.2.1 Duct Line Installation
3.2.2 Omitted
3.3 MEDIUM-VOLTAGE CABLES
3.3.1 Cable Joints
3.3.1.1 Types
3.3.1.2 Requirements
3.3.2 Terminations
3.3.2.1 Factory Preformed Type
3.4 LOW-VOLTAGE CABLES
3.5 DUCT LINES
3.5.1 Requirements
3.5.2 Treatment
3.5.3 Concrete Encasement
3.5.4 Non-encased Direct-Burial
3.5.5 Installation of Couplings
3.5.5.1 Omitted
3.5.5.2 Plastic Duct
3.6 MANHOLES AND HANDHOLES
3.7 WELDING
3.8 CABLE MARKERS
3.9 FRANGIBLE REQUIREMENTS
3.10 ELEVATED AIRFIELD AND HELIPORT LIGHTS
3.11 SEMIFLUSH AIRFIELD AND HELIPORT LIGHTS
3.12 WIRES, FIXTURES, AND ENCLOSURES IN SAW KERFS AND DRILLED HOLES

3.12.1 Holes for Light Fixtures
3.12.2 Holes for Transformer Enclosures
3.12.3 Omitted
3.12.4 Sandblasting
3.12.5 Cleaning
3.12.6 Lighting Fixture Installation
3.13 SPLICES FOR AIRFIELD AND HELIPORT LIGHTING CABLE
3.13.1 Connectors
3.14 GROUNDING SYSTEMS
3.14.1 Counterpoise Installation
3.14.2 Fixture Grounding
3.15 OMITTED
3.16 OMITTED
3.17 OMITTED
3.18 OMITTED
3.19 ISOLATION TRANSFORMERS
3.20 RUNWAY AND TAXIWAY LIGHTING SYSTEMS
3.20.1 Runway and Taxiway Edge Lights
3.21 OMITTED
3.22 FIELD QUALITY CONTROL
3.22.1 Operating Test
3.22.2 Distribution Conductors, 600-Volt Class
3.22.3 Counterpoise System Test and Inspection
3.22.4 Progress Testing for Series Lighting Circuits
3.22.5 Electrical Acceptance Tests
3.22.5.1 Low-Voltage Continuity Tests
3.22.5.2 High-Voltage Insulation Resistance Tests
3.22.6 Omitted
3.22.7 Omitted
3.22.8 Final Operating Tests

-- End of Section Table of Contents --

UFGS-16526A (August 2001)

SECTION 16526A

AIRFIELD AND HELIPORT LIGHTING AND VISUAL NAVIGATION AIDS
08/01

PART 1 GENERAL

1.1 REFERENCES

The publications listed below form a part of this specification to the extent referenced. The publications are referred to in the text by the basic designation only.

AMERICAN NATIONAL STANDARDS INSTITUTE (ANSI)

ANSI C119.1	(1986; R 1997) Sealed Insulated Underground Connector Systems Rated 600 Volts

AMERICAN SOCIETY FOR TESTING AND MATERIALS (ASTM)

ASTM A 123/A 123M	(2000) Zinc (Hot-Dip Galvanized) Coatings on Iron and Steel Products
ASTM A 153/A 153M	(2000) Zinc Coating (Hot Dip) on Iron and Steel Hardware
ASTM A 780	(2000) Repair of Damaged and Uncoated areas of Hot-Dipped Galvanized Coatings
ASTM B 117	(1997) Operating Salt Spray (Fog) Apparatus
ASTM D 709	(2000) Laminated Thermosetting Materials
ASTM D 1654	(1992) Evaluation of Painted or Coated Specimens Subjected to Corrosive Environments

FACTORY MUTUAL ENGINEERING AND RESEARCH (FM)

FM P7825a	(1998) Approval Guide Fire Protection
FM P7825b	(1998) Approval Guide Electrical Equipment

U.S. FEDERAL AVIATION ADMINISTRATION (FAA)

FAA AC 150/5345-7	(Rev D; Change 1) L-824 Underground Electrical Cable for Airport Lighting Circuits
FAA AC 150/5345-26	(Rev B; Changes 1 & 2) L-823 Plug and Receptacle, Cable Connectors
FAA AC 150/5345-42	(Rev C; Change 1) Airport Light Bases, Transformer Houses, Junction Boxes and

	Accessories
FAA AC 150/5345-44	(Rev F) Taxiway and Runway Signs
FAA AC 150/5345-47	(Rev A) Isolation Transformers for Airport Lighting Systems
FAA AC 150/5370-10	(Rev A; Changes 1 thru 11) Specifying Construction of Airports
FAA C-6046	(1978) Frangible Coupling Type I and Type 1A, Details

INSTITUTE OF ELECTRICAL AND ELECTRONICS ENGINEERS (IEEE)

IEEE C2	(1997) National Electrical Safety Code
IEEE Std 48	(1998) Standard Test Procedures and Requirements for Alternating-Current Cable Terminations 2.5 kV through 765 kV

NATIONAL ELECTRICAL MANUFACTURERS ASSOCIATION (NEMA)

NEMA RN 1	(1998) Polyvinyl-Chloride (PVC) Externally Coated Galvanized Rigid Steel Conduit and Intermediate Metal Conduit

NATIONAL FIRE PROTECTION ASSOCIATION (NFPA)

NFPA 70	(2002) National Electrical Code

U.S. DEPARTMENT OF AGRICULTURE (USDA)

REA Bulletin 1753F-205 (PE-39)	(1993) Filled Telephone Cables

THE SOCIETY FOR PROTECTIVE COATINGS (SSPC)

SSPC Paint 20	(1991) Zinc-Rich Primers (Type I - "Inorganic" and Type II - "Organic")

UNDERWRITERS LABORATORIES (UL)

UL 1	(2000) Flexible Metal Conduit
UL 6	(1997) Rigid Metal Conduit
UL 83	(1998; Rev thru Sep 1999) Thermoplastic-Insulated Wires and Cables
UL 360	(1996; Rev thru Oct 1997) Liquid-Tight Flexible Steel Conduit
UL 486A	(1991; Rev thru Dec 1998) Wire Connectors and Soldering Lugs for Use with Copper Conductors
UL 486B	(1997; Rev Jun 1997) Wire Connectors for Use with Aluminum Conductors

UL 510	(1994; Rev thru Apr 1998) Polyvinyl Chloride, Polyethylene, and Rubber Insulating Tape
UL 514A	(1996; Rev Dec 1999) Metallic Outlet Boxes
UL 797	(1993; Rev thru Mar 1997) Electrical Metallic Tubing
UL 1242	(1996; Rev Mar 1998) Intermediate Metal Conduit
UL Elec Const Dir	(1999) Electrical Construction Equipment Directory

1.2 GENERAL REQUIREMENTS

Items of the same classification shall be identical including equipment, assemblies, parts, and components.

1.2.1 Code Compliance

The installation shall comply with the requirements and recommendations of NFPA 70 and IEEE C2 and local codes where required.

1.2.2 Standard Product

Material and equipment shall be a standard product of a manufacturer regularly engaged in the manufacture of the product and shall essentially duplicate items that have been in satisfactory use for at least 2 years prior to bid opening.

1.2.3 Prevention of Corrosion

1.2.3.1 Metallic Materials

Metallic materials shall be protected against corrosion as specified. Aluminum shall not be used in contact with earth or concrete. Where aluminum conductors are connected to dissimilar metal, fittings conforming to UL 486B shall be used.

1.2.3.2 Ferrous Metal Hardware

Ferrous metal hardware shall be hot-dip galvanized in accordance with ASTM A 123/A 123M and ASTM A 153/A 153M.

1.2.3.3 Luminaires Fabricated from Ferrous Metals

Luminaires fabricated from ferrous metals, unless hot-dip galvanized or of porcelain enamel finish shall be factory finished with a weather-resistant finish in accordance with paragraphs FACTORY COATING and FINISHING, except exposure shall be 200 hours. Finish color shall be the manufacturer's standard, unless otherwise indicated.

1.2.4 Unusual Service Conditions

Items furnished under this section shall be specifically suitable for the following unusual service conditions:

1.2.4.1 Omitted

1.2.4.2 Other

Material or equipment to be installed underground; in handholes, manholes, or underground vaults; or in light bases shall be suitable for submerged operation.

1.2.5 Verification of Dimensions

The Contractor shall become familiar with details of the work, verify dimensions in the field, and advise the Contracting Officer of any discrepancy before performing any work.

1.2.6 Existing Lighting Circuit Operation

Existing airfield lighting systems shall remain in operating condition except for minimum interruptions, as approved in writing by the Contracting Officer. Prior to each interruption, all necessary materials and a sufficient labor force shall be assembled to permit completing the work within the scheduled time interval. Under no circumstances shall any of the existing airfield lighting circuits be left inoperative without making provisions for suitable temporary connections in the affected area or areas. The Contractor shall submit a plan for outages and maintaining lighting and lighting control.

1.3 SYSTEM DESCRIPTION

The airfield shall consist of airfield taxiway lights and control.

1.4 SUBMITTALS

Government approval is required for submittals with a "G" designation; submittals not having a "G" designation are for information only. When used, a designation following the "G" designation identifies the office that will review the submittal for the Government. The following shall be submitted in accordance with Section 01330 SUBMITTAL PROCEDURES:

SD-02 Shop Drawings

Lighting and Navigation Aids

Coordination drawings consisting of composite drawings showing coordination of work of one trade with that of other trades and with the structural and architectural elements of the work. Drawings shall be in sufficient detail to show overall dimensions of related items, clearances, and relative locations of work in allotted spaces. Drawings shall indicate where conflicts or clearance problems exist between the various trades.

As-Built Drawings

Drawings that provide current factual information including deviations from, and amendments to the drawings and changes in the work, concealed and visible, shall be provided as instructed. The as-built drawings shall show installations with respect to fixed installations not associated with the systems specified herein. Cable and wire shall be accurately identified as to direct-burial or in conduit and shall locate the connection and routing to and

away from bases, housings, and boxes.

SD-03 Product Data

Materials and Equipment

A complete itemized listing of equipment and materials proposed for incorporation into the work. Each itemization shall include an item number, the quantity of items proposed, and the name of the manufacturer. Data composed of catalog cuts, brochures, circulars, specifications and product data, and printed information in sufficient detail and scope to verify compliance with requirements of the contract documents.

Protection Plan

Detailed procedures to prevent damage to existing facilities or infrastructures. If damage does occur, the procedures shall address repair and replacement of damaged property at the Contractor's expense.

Training

Information describing training to be provided, training aids to be used, samples of training materials to be provided, and schedules of training, 3 weeks before training is scheduled to begin.

Special Tools

List of special tools and test equipment required for maintenance and testing of the products supplied by the Contractor.

Parts

A list of parts and components for the system by manufacturer's name, part number, nomenclature, and stock level required for maintenance and repair necessary to ensure continued operation with minimal delays.

Repair Requirements

Instructions necessary to check out, troubleshoot, repair, and replace components of the systems, including integrated electrical and mechanical schematics and diagrams and diagnostic techniques necessary to enable operation and troubleshooting after acceptance of the system shall be provided.

SD-06 Test Reports

Field Quality Control

Upon completion and testing of the installed system, performance test reports are required in booklet form showing all field tests performed to adjust each component and all field tests performed to provide compliance with the specified performance criteria. Each test shall indicate the final position of controls.

Field test reports shall be written, signed and provided as each

circuit or installation item is completed. Field tests shall include resistance-to-ground and resistance between conductors, and continuity measurements for each circuit. For each series circuit the input voltage and output current of the constant current regulator at each intensity shall be measured. For multiple circuits the input and output voltage of the transformer for each intensity setting shall be measured. A visual inspection of the lights operation, or of the markings appearance, or of the installation of fixtures or units installed shall be reported.

Inspection

Inspection reports shall be prepared and provided as each stage of installation is completed. These reports shall identify the activity by contract number, location, quantity of material placed, and compliance with requirements.

SD-07 Certificates

Welding
Cables, General Requirements

Certifications, when specified or required, including Certification of the Qualifications of Medium-Voltage Cable Installers, Certified Factory and Field Test Reports, and Certificates of Compliance submitted in lieu of other proofs of compliance with these contract provisions. A certification that contains the names and the qualifications of persons recommended to perform the splicing and termination of medium-voltage cables approved for installation under this contract shall be included. The certification shall indicate that any person recommended to perform actual splicing and termination has been adequately trained in the proper techniques and has had at least 3 recent years of experience in splicing and terminating the same or similar types of cables approved for installation. Any person recommended by the Contractor may be required to perform a dummy or practice splice and termination, in the presence of the Contracting Officer, before being approved as a qualified installer of medium-voltage cables. If that additional requirement is imposed, the Contractor shall provide short sections of the approved types of cables with the approved type of splice and termination kits, and detailed manufacturer's instruction for the proper splicing and termination of the approved cable types. The certification shall be prepared in conformance with paragraph CERTIFICATES OF COMPLIANCE in the SPECIAL CONTRACT REQUIREMENTS, and shall be accompanied by satisfactory proof of the training and experience of persons recommended by the Contractor as cable installers. The SF sub 6 gas pressurized cable and conduit system installer must be trained and certified in installation of this type of system and must be approved by the manufacturer of the system. Prior to welding operations 2 copies of qualified procedures and lists of names and identification symbols of qualified welders and welding operators are required.

Materials and Equipment

When equipment or materials are specified to conform to the standards or publications and requirements of AASHTO, ANSI, ASTM,

AEIC, FM, IEEE, IES, NEMA, NFPA, or UL, or to an FAA, FS, or MS, proof that the items furnished under this section of the specifications conform to the specified requirements shall be included. The label or listing in UL Elec Const Dir or in FM P7825a, FM P7825b or the manufacturer's certification or published catalog specification data statement that the items comply with applicable specifications, standards, or publications and with the manufacturer's standards will be acceptable evidence of such compliance. Certificates shall be prepared by the manufacturer when the manufacturer's published data or drawings do not indicate conformance with other requirements of these specifications.

SD-10 Operation and Maintenance Data

Equipment

Six copies of operation and six copies of maintenance manuals for the equipment furnished. One complete set shall be furnished prior to performance testing and the remainder shall be furnished upon acceptance. Operating manuals shall detail the step-by-step procedures required for system startup, operation, and shutdown. Operating manuals shall include the manufacturer's name, model number, parts list, and brief description of all equipment and their basic operating features. Maintenance manuals shall list routine maintenance procedures, possible breakdowns and repairs, and troubleshooting guides. Maintenance manuals shall include conduit and equipment layout and simplified wiring and control diagrams of the system as installed.

PART 2 PRODUCTS

2.1 MATERIALS

Equipment and materials shall be new unless indicated or specified otherwise. Materials and equipment shall be labelled when approved by Underwriters Laboratories (UL) or Factory Mutual (FM) System. Askarel and insulating liquids containing polychlorinated biphenyls (PCB's) will not be allowed in any equipment. Equipment installed below grade in vaults, manholes, and handholes shall be the submersible type.

2.1.1 Electrical Tape

Electrical tape shall be UL 510 plastic insulating tape.

2.1.2 Nameplates

Each major component of equipment shall have as a minimum the manufacturer's name, address, and catalog or style number on a nameplate securely attached to the item of equipment. Laminated plastic nameplates shall be provided for equipment, controls, and devices to identify function, and where applicable, position. Nameplates shall be 1/8 inch thick laminated cellulose paper base phenolic resin plastic conforming to ASTM D 709 sheet type, grade ES-3, white with black center core. Surface shall be a matte finish with square corners. Lettering shall be engraved into the black core. Size of nameplates shall be 1 by 2-1/2 inches minimum with minimum 1/4 inch high normal block lettering. Nameplates provided as indicated. Nameplates shall be fastened to the device with a minimum of two sheet metal screws or two rivets.

2.1.3 Conduit, Conduit Fittings, and Boxes

2.1.3.1 Rigid Steel or Intermediate Metal Conduit (IMC) and Fittings

The metal conduit and fittings shall be UL 6 and UL 1242, respectively, coated with a polyvinylchloride (PVC) sheath bonded to the galvanized exterior surface, nominal 40 mils thick, conforming to NEMA RN 1.

2.1.3.2 Flexible Metal Conduit

Flexible metal conduit shall be UL 1, zinc-coated steel. UL 360 liquid-tight flexible metal conduit shall be used in wet locations.

2.1.3.3 Outlet Boxes for Use with Steel Conduit, Rigid or Flexible

These outlet boxes shall be UL 514A, cast metal with gasket closures.

2.1.3.4 Plastic Duct for Concrete Encased Burial

These ducts shall be provided as specified in Section 16375, ELECTRICAL DISTRIBUTION SYSTEM, UNDERGROUND.

2.1.3.5 Plastic Conduit for Direct Burial

This plastic conduit shall be provided as specified in Section 16375, ELECTRICAL DISTRIBUTION SYSTEM, UNDERGROUND.

2.1.3.6 Frangible Couplings and Adapters

These frangible couplings shall be in accordance with FAA C-6046. Upper section of frangible coupling shall be provided with one of the following:

a. Unthreaded for slip-fitter connections.

b. 2-13/32 inch 16N-1A modified thread for nut and compression ring to secure 2 inch EMT.

c. 2 inch 11-1/2-N.P.T. (tapered) with 7/32 inch nominal wall thickness to accept rigid conduit coupling.

d. Frangible Couplings for specialized applications as approved.

e. Electrical Metallic Tubing UL 797, where indicated for use with frangible couplings and adapters.

2.1.4 Wire and Cable

Conductors shall be copper except as otherwise indicated.

2.1.4.1 Conductor Sizes

Conductor size shall conform to American Wire Gage (AWG). Conductor sizes larger than No. 8 AWG shall be stranded. No. 8 AWG and smaller may be solid or stranded unless otherwise indicated.

2.1.4.2 Omitted
2.1.4.3 Omitted

2.1.4.4 Wire and Cable for Airfield and Heliport Lighting Systems

a. Airfield and heliport lighting cable shall be FAA AC 150/5345-7, Type L-824 for Type B 5000-volt cable. Series airfield and heliport lighting cable shall be unshielded.

b. Cable for pavement slot installation shall be UL 83 Type THWN, except as indicated otherwise.

c. Counterpoise Wire. No. 4 AWG bare stranded copper, annealed or soft drawn.

d. Control Cable. Multiconductor type FAA AC 150/5345-7, Type B for 120 volt AC control, rated 600 volts, No. 12 AWG, and conforming to the following unless indicated otherwise. Conductors shall be color coded. The cable shall have an overall jacket of heavy-duty neoprene rated for direct burial. For 48 volt DC control, multi-conductor, 300 volts, No. 19 AWG cable shall be in accordance with REA Bulletin 1753F-205 (PE-39).

e. Fused Cable Connectors. Connector shall consist of a line-side receptacle and a load-side plug, each in a molded rubber form and including crimp-on fittings for the cable ends to accommodate a 250-volt cartridge-type fuse with fuse rating as indicated. Connectors in kit form shall be properly sized for the specific cable diameter involved. Completed connection shall be watertight.

2.1.4.5 Cable Tags

Cable tags for each cable or wire shall be installed at duct entrances entering or leaving manholes, handholes, and at each terminal within the lighting vault. Cable tags shall be stainless steel, bronze, lead strap, or copper strip, approximately 1/16 inch thick or hard plastic 1/8 inch thick suitable for immersion in salt water and impervious to petroleum products and shall be of sufficient length for imprinting the legend on one line using raised letters. Cable tags shall be permanently marked or stamped with letters not less than 1/4 inch in height as indicated. Two-color laminated plastic is acceptable. Plastic tags shall be dark colored with markings of light color to provide contrast so that identification can be easily read. Fastening material shall be of a type that will not deteriorate when exposed to water with a high saline content and to petroleum products.

2.1.4.6 Concrete Markers for Direct Buried Cable Systems

Concrete markers shall be as specified in Section 16375, ELECTRICAL DISTRIBUTION SYSTEM, UNDERGROUND.

2.1.5 Ground Rods

Ground rods shall be sectional copper-clad steel with diameter adequate to permit driving to full length of the rod, but not less than 3/4 inch in diameter and not more than 10 feet long, unless indicated otherwise.

2.1.6 Omitted
2.1.7 Omitted

2.1.8 Cable Connectors and Splices

Cable connectors in accordance with FAA AC 150/5345-26, Item L-823 shall be

used for connections and splices appropriate for the type of cable. Other types of cable connectors and splices shall be of copper alloys for copper conductors, aluminum alloys for aluminum-composition conductors and a type designed to minimize galvanic corrosion for copper to aluminum-composition conductors. For FAA Type L-824 lighting cable, connectors shall be FAA AC 150/5345-26, Type L-823.

2.1.9 Transformers

2.1.9.1 Encapsulated Isolation Transformers

These transformers shall be FAA AC 150/5345-47, Type L-830. Each transformer shall be provided with rating as shown on the contract drawings.

2.1.10 Light Bases

Light bases shall be FAA AC 150/5345-42 Type L-867, L-868,and L-869 as indicated. Steel bases, Class 1, Size B shall be provided as indicated or as required to accommodate the fixture or device installed thereon if diameter is not shown.

2.1.10.1 Accessories

Base plates, cover plates, and adapter plates shall be provided to accommodate various sizes of fixtures. Bolts shall be stainless steel.

2.1.11 Sealant for Fixtures and Wires in Drilled Holes or Saw Kerfs

The sealant shall be in accordance with FAA AC 150/5370-10, Type P-606. Use FAA AC 150/5370-10, Type P-606 sealant for use in asphaltic concrete (AC) or Portland cement concrete (PCC) pavement compatible with AC pavement and having a minimum elongation of 50 percent. Formulations of Type P-606 which are compatible with PCC pavement only are prohibited.

2.1.12 Omitted

2.1.13 Lamps and Filters

Lamps shall be of size and type indicated, or as required by fixture manufacturer for each lighting fixture required under this contract. Filters shall be of colors as indicated and conforming to the specification for the light concerned or to the standard referenced.

2.1.14 Omitted
2.1.15 Omitted
2.1.16 Omitted
2.1.17 Omitted
2.1.18 Omitted
2.1.19 Omitted
2.1.20 Omitted

2.1.21 Lighting Fixtures

The lighting fixtures for the airfield and heliport lighting shall be as shown in the contract drawings or as required in other contract documents.

2.2 OMITTED
2.3 OMITTED
2.4 OMITTED

2.5 OMITTED
2.6 OMITTED
2.7 OMITTED
2.8 OMITTED
2.9 OMITTED
2.10 OMITTED
2.11 OMITTED

2.12 TAXIWAY LIGHTING SYSTEMS

Taxiway lighting systems shall include edge lights, guidance signs, and hold position lights and signs. These systems shall also include the associated equipment, power supplies and controls, mounting devices, and interconnecting wiring to provide complete systems as specified.

2.12.1 Taxiway Edge Lights
*1
Taxiway edge light shall emit aviation blue light provided by filters or globes for both airfields and heliports. The edge lights shall meet the requirements of FAA AC 150/5345-46B, Type L-861, elevated or Type L-852E, semiflush lights.

2.12.2 Omitted

2.12.3 Taxiway Guidance Signs

The taxiway guidance signs shall meet the requirements of FAA AC 150/5345-44, Type L-858Y for information and Type L-858R for mandatory signs. The size and information on the signs shall be as shown on contract drawings. The power supply to connect to series circuits shall be as indicated on the contract drawings.

2.12.4 Hold Position Lights and Signs

The hold positions shall be marked by painted lines and signs as specified or indicated on the contract drawings. Hold position signs shall meet the requirements of FAA AC 150/5345-44, Type L-858R, with the size and information as indicated on the contract drawings.

2.13 OMITTED
2.14 OMITTED
2.15 OMITTED
2.16 OMITTED
2.17 OMITTED
2.18 OMITTED

2.19 FACTORY COATINGS

Equipment and component items, including but not limited to transformer stations and ferrous metal luminaries not hot-dip galvanized or porcelain enamel finish shall be provided with corrosion-resistant finishes which shall withstand 500 hours of exposure to the salt spray test specified in ASTM B 117 without loss of paint or release of adhesion of the paint primer coat to the metal surface in excess of 1/16 inch from the test mark. The scribed test mark and test evaluation shall be in accordance with ASTM D 1654 with a rating of not less than 7 in accordance with TABLE 1, (Procedure A). Cut edges or otherwise damaged surfaces of hot-dip galvanized sheet steel or mill galvanized sheet steel shall be coated with zinc rich paint conforming to SSPC Paint 20 in accordance with ASTM A 780.

PART 3 EXECUTION

3.1 GENERAL INSTALLATION REQUIREMENTS

Circuits installed underground shall conform to the requirements of Section 16375, ELECTRICAL DISTRIBUTION SYSTEM, UNDERGROUND, except as required herein. Except as covered herein, excavation, trenching, and backfilling shall conform to the requirements of Section 02316 EXCAVATION, TRENCHING, AND BACKFILLING FOR UTILITIES SYSTEMS. Concrete work shall conform to the requirements of Section 02753 CONCRETE PAVEMENT FOR AIRFIELDS AND OTHER HEAVY-DUTY PAVEMENT.

3.2 CABLES, GENERAL REQUIREMENTS

The type of installation, size and number of cables shall be as indicated. Conductors larger than No. 8 AWG shall be stranded. Loads shall be divided as evenly as practicable on the various phases of the system. Manufacturer's written recommendations shall be furnished for each type of splice and medium-voltage cable joint and termination, and for fireproofing application methods, and shall be approved before any work is done. Medium-voltage cable joints and terminations shall be the standard product of a manufacturer and shall be either of the factory preformed type or of the kit type containing tapes and other required parts. Medium-voltage cable joints shall be made by qualified cable splicers. Compounds and tapes shall be electrical grade suitable for the cable insulation provided and shall use design materials and techniques recommended by the manufacturer. Maximum length of cable pull and cable pulling tensions shall not exceed the cable manufacturer's recommendations.

3.2.1 Duct Line Installation

Cables shall be installed in duct lines. Cable joints in medium-voltage cables shall be made in bases or manholes only. Neutral and ground conductors shall be installed in the same duct with their associated phase conductors. Counterpoise cable shall be installed in a separate duct or direct-burial not less than 6 inches above the uppermost duct containing electrical cable. Electrical metallic tubing shall not be installed underground or enclosed in concrete.

3.2.2 Omitted

3.3 MEDIUM-VOLTAGE CABLES

Medium-voltage cables shall be suitable for a rated circuit voltage of 5 kV. Other parts of the cable system such as joints and terminations shall have ratings not less than the rating of the cables on which they are installed. Separable insulated connectors shall have nominal voltage ratings coordinated to associated apparatus ratings rather than cable ratings when used to connect cable to apparatus. Cables shall be provided with 133 percent insulation level. Neutral conductors of grounded neutral systems shall be of the same insulation material as phase conductors, except that a 600-volt insulation rating is acceptable.

3.3.1 Cable Joints

Shields shall be applied as required to continue the shielding system through each entire cable joint. Shields may be integrally molded parts of preformed joints. Shields shall be grounded at each joint.

3.3.1.1 Types

Separable insulated connectors of suitable construction or standard splice kits shall be used for single-conductor and two-conductor cables. The connectors shall be of FAA AC 150/5345-26 type.

3.3.1.2 Requirements

Cable joints shall provide insulation and jacket equivalent to that of the associated cable. Lead sleeves shall be provided for lead-covered cables. Armored cable joints shall be enclosed in compound-filled, cast-iron or alloy, splice boxes equipped with stuffing boxes and armor clamps of a suitable type and size for the cable being installed.

3.3.2 Terminations

Terminations shall be IEEE Std 48, Class 1 or Class 2, of the molded elastomer, wet-process porcelain, prestretched elastomer, heat-shrinkable elastomer, or taped type. Acceptable elastomers are track-resistant silicone rubber or track-resistant ethylene propylene compounds, such as ethylene propylene rubber or ethylene propylene diene monomer. Separable insulated connectors may be used for apparatus terminations, when such apparatus is provided with suitable bushings. Terminations shall be of the outdoor type, except that where installed inside outdoor equipment housings which are sealed against normal infiltration of moisture and outside air, indoor, Class 2 terminations are acceptable. Class 3 terminations are not acceptable. Terminations, where required, shall be provided with mounting brackets suitable for the intended installation and with grounding provisions for the cable shielding, metallic sheath, and armor.

3.3.2.1 Factory Preformed Type

Molded elastomer, wet-process porcelain, prestretched, and heat-shrinkable terminations shall utilize factory preformed components to the maximum extent practicable rather than tape build-up. Terminations shall have basic impulse levels as required for the system voltage level. Leakage distances shall pass the wet withstand voltage test required by IEEE Std 48 for the next higher BIL level.

3.4 LOW-VOLTAGE CABLES

Cable shall be rated 600 volts, except that secondaries of isolation transformer to in-pavement lights installed in pavement saw kerf and 48 volt DC control cables may be 300 volts. Other parts of cable systems such as splices and terminations shall be rated at not less than 600 volts. Splices in wires No. 10 AWG and smaller shall be made with an insulated, solderless, pressure type connector, conforming to the applicable requirements of UL 486A. Splices in wires No. 8 AWG single conductor cable shall be made with FAA AC 150/5345-26 Type L-823 connectors. Splices below grade or in wet locations shall be sealed type conforming to ANSI C119.1 or shall be waterproofed by a sealant-filled, thick wall, heat shrinkable, thermosetting tubing or by pouring a thermosetting resin into a mold that surrounds the joined conductors.

3.5 DUCT LINES

Duct lines shall be concrete-encased, thin-wall type for duct lines between manholes and for other medium-voltage lines. Low-voltage lines run

elsewhere may be non-encased direct-burial, thick-wall type.

3.5.1 Requirements

Numbers and sizes of ducts shall be as indicated. Duct lines shall be laid with a minimum slope of 4 inches per 100 feet. Depending on the contour of the finished grade, the high point may be at a terminal, a manhole, a handhold, or between manholes or handholes. Manufactured 90 degree duct bends may be used only for pole or equipment risers, unless specifically indicated as acceptable. The minimum manufactured bend radius shall be 18 inches for ducts of less than 3 inches diameter, and 36 inches for ducts 3 inches or greater in diameter. Otherwise, long sweep bends having a minimum radius of 25 feet shall be used for a change of direction of more than 5 degrees, either horizontally or vertically. Both curved and straight sections may be used to form long sweep bends as required, but the maximum curve shall be 30 degrees and manufactured bends shall be used. Ducts shall be provided with end bells when duct lines terminate in manholes or handholes. Duct line markers shall be provided as indicated at the ends of long duct line stubouts or for other ducts whose locations are indeterminate because of duct curvature or terminations at completely below-grade structures. In lieu of markers, a 5 mil brightly colored plastic tape not less than 3 inches in width and suitably inscribed at not more than 10 feet on centers with a continuous metallic backing and a corrosion-resistant 1 mil metallic foil core to permit easy location of the duct line, shall be placed approximately 12 inches below finished grade levels of such lines.

3.5.2 Treatment

Ducts shall be kept clean of concrete, dirt, or foreign substances during construction. Field cuts requiring tapers shall be made with proper tools and match factory tapers. After a duct line is completed, a standard flexible mandrel shall be used for cleaning followed by a brush with stiff bristles. Mandrels shall be at least 12 inches long and shall have diameters 1/4 inch less than the inside diameter of the duct being cleaned. Pneumatic rodding may be used to draw in lead wires. A coupling recommended by the duct manufacturer shall be used when an existing duct is connected to a duct of different material or shape. Ducts shall be stored to avoid warping and deterioration with ends sufficiently plugged to prevent entry of water or solid substances. Ducts shall be thoroughly cleaned before being laid. Plastic ducts shall be stored on a flat surface and protected from the direct rays of the sun.

3.5.3 Concrete Encasement

Each single duct shall be completely encased in concrete with a minimum of 3 inches of concrete around each duct, except that only 2 inchesof concrete are required between adjacent electric power or adjacent communication ducts, and 4 inches of concrete shall be provided between adjacent electric power and communication ducts. Duct line encasements shall be monolithic construction. Where a connection is made to a previously poured encasement, the new encasement shall be well bonded or doweled to the existing encasement. At any point, except railroad crossings, tops of concrete encasements shall be not less than 18 inches below finished grade or paving. At railroad crossings, duct lines shall be encased with concrete, reinforced as indicated. Tops of concrete encasements shall be not less than 5 feet below tops of rails, unless otherwise indicated. Separators or spacing blocks shall be made of steel, concrete, plastic, or a combination of these materials placed not further apart than 4 feet on

centers. Ducts shall be securely anchored to prevent movement during the placement of concrete and joints shall be staggered at least 6 inches vertically.

3.5.4 Non-encased Direct-Burial

Top of duct lines shall be below frost line but not less than 24 inches below finished grade. Ducts shall be buried below frost line but in the earth and shall be installed with a minimum of 3 inches of earth around each duct, except that between adjacent electric power and communication ducts, 12 inches of earth is required. Bottoms of trenches shall be graded toward manholes or handholes and shall be smooth and free of stones, soft spots, and sharp objects. Where bottoms of trenches comprise materials other than sand or stone-free earth, 3-inch layers of sand or stone-free earth shall be laid first and compacted to approximate densities of surrounding firm soil before installing ducts in direct-contact tiered fashion. Joints in adjacent tiers of duct shall be vertically staggered at least 6 inches. The first 4-inch layer of backfill cover shall be sand or stone-free earth compacted as previously specified. Duct banks may be held in alignment with earth. However, high-tiered banks shall use a wooden frame or equivalent form to hold ducts in alignment prior to backfilling. Selected earth at duct banks shall be thoroughly tamped in 4 to 6 inch layers.

3.5.5 Installation of Couplings

Joints in each type of duct shall be made up in accordance with the manufacturer's recommendations for the particular type of duct and coupling selected and as approved. In the absence of specific recommendations, various types of duct joint couplings shall be made watertight as specified.

3.5.5.1 Omitted

3.5.5.2 Plastic Duct

Duct joints shall be made by brushing a plastic solvent cement on insides of plastic coupling fittings and on outsides of duct ends. Each duct and fitting shall then be slipped together with a quick one-quarter-turn twist to set the joint tightly.

3.6 MANHOLES AND HANDHOLES

The manholes and handholes shall be as specified in Section 16375 ELECTRICAL DISTRIBUTION SYSTEM, UNDERGROUND.

3.7 WELDING

The welding of supports and metallic ducts and welding or brazing of electrical connections shall be formed by qualified welders.

3.8 CABLE MARKERS

Cable markers or tags shall be provided for each cable at duct entrances entering or leaving manholes or handholes and at each termination within the lighting vault. Cables in each manhole or handhole shall have not less than two tags per cable, one near each duct entrance hole. Immediately after cable installation, tags shall be permanently attached to cables and wires so that they cannot be accidentally detached.

3.9 FRANGIBLE REQUIREMENTS

Frangible supports, couplings, and adapters shall be installed as indicated or specified.

3.10 ELEVATED AIRFIELD AND HELIPORT LIGHTS

Elevated lights shall be frangibly mounted, not to exceed 14 inches in height except where higher mounting is permitted in snow accumulation areas. Equipment exceeding 14 inches in height shall be frangibly mounted as indicated.

3.11 SEMIFLUSH AIRFIELD AND HELIPORT LIGHTS

Water, debris, and other foreign substances shall be removed prior to installing semiflush light base and light. Positioning jigs shall be used to hold the light bases and/or lights to ensure correct orientation and leveling until the concrete, adhesive, or sealant can provide permanent support.

3.12 WIRES, FIXTURES, AND ENCLOSURES IN SAW KERFS AND DRILLED HOLES

3.12.1 Holes for Light Fixtures

Holes shall be bored in existing pavement to the dimensions indicated with a diamond-edged bit to provide a smooth, straight cut. Bottom of hole shall be flat or slightly concave, except that an area at least 1 inch wide around the perimeter shall be flat. Surfaces deeper than the prescribed depth shall be filled with sealant to the level of the flat area and allowed to cure before further placement.

3.12.2 Holes for Transformer Enclosures

Holes shall be drilled or excavated through concrete pavement and loose material removed. Hole shall be filled with concrete to depth indicated. A minimum of 3 inches of concrete shall be provided at bottom of hole.

3.12.3 Omitted

3.12.4 Sandblasting

Saw kerfs, grooves, and holes shall be sandblasted to remove foreign or loose material. Sandblasting shall use approved equipment maintained in good working order. Sand for blasting shall be proper size and quality to perform the work. Nozzles for sandblasting shall be of the proper size in relation to the groove or holes to be cleaned. Nozzles enlarged by wear shall be replaced as necessary. Sandblast air pressure shall be not less than 90 psi.

3.12.5 Cleaning

Immediately prior to installation of wire or light fixtures, saw kerfs and holes shall be flushed with a high velocity water jet or steam, and then cleaned and dried with a high velocity air jet to remove dirt, water, and foreign material.

3.12.6 Lighting Fixture Installation

Sides and bottom of each light base shall be sandblasted immediately prior

to installation. Inside faces of bored hole and bottom and sides of light base shall be covered with a coating of sealant that will completely fill the void between concrete and base. A jig or holding device shall be used when installing each light fixture to ensure positioning to the proper elevation, alignment, level control, and azimuth control. Light fixture shall be oriented with the light beams parallel to the runway or taxiway centerline and facing in the required direction. Outermost edge of fixture shall be level with the surrounding pavement. Surplus sealant or flexible embedding material shall be removed. The holding device shall remain in place until sealant has reached its initial set. Fixture lead wires shall be properly arranged with respect to their connecting position. The wireway entrance into the light recess shall be blocked to retain the sealant material during curing. Fixtures shall be installed in accordance with manufacturer's recommendations.

3.13 SPLICES FOR AIRFIELD AND HELIPORT LIGHTING CABLE

3.13.1 Connectors

Kit type connectors shall be used to splice 5 kV single-conductor series lighting cables. During installation and prior to covering with earth, mating surfaces of connectors shall be covered until connected and clean when plugged together. At joint where connectors come together, heat shrinkable tubing shall be installed with waterproof sealant with two half-lapped layers of tape over the entire joint. Joint shall prevent entrapment of air which might subsequently loosen the joint.

3.14 GROUNDING SYSTEMS

3.14.1 Counterpoise Installation

Counterpoise wire shall be laid for entire length of circuits supplying airfield lighting. Wire shall be in one piece, except where distance exceeds the length usually supplied. Counterpoise shall be installed on top of the envelope of concrete-encased duct and approximately 6 inches above direct burial cables and duct lines. Where trenches or duct lines intersect, counterpoise wires shall be electrically interconnected by exothermic welding or brazing. Counterpoise to earth ground shall be connected at every 600 feet of cable run, at lighting vault, and at feeder connection to light circuit by means of ground rods as specified. Counterpoise shall be installed in a separate duct under roads, railroads, and paved areas above the highest duct containing electrical or communications circuits.

3.14.2 Fixture Grounding

Each fixture or group of adjacent fixtures shall be grounded by a grounding circuit separate from the counterpoise system unless required otherwise or by driven ground rods if permitted. Fixtures, steel light bases or grounding bushings on steel conduits shall be connected to an independent ground rod by a No. 6 AWG bare stranded copper wire. Copper wire shall be connected to ground rods by exothermic weld or brazing.

3.15 OMITTED
3.16 OMITTED
3.17 OMITTED
3.18 OMITTED

3.19 ISOLATION TRANSFORMERS

Transformer lead connections shall conform to FAA AC 150/5345-26. Transformer secondary connectors shall plug directly into a mating connector on the transformer secondary leads. During installation, mating surfaces of connectors shall be covered until connected and clean when plugged together. At joint where connectors come together, heat shrinkable tubing shall be installed with waterproof sealant or with two half-lapped layers of tape over the entire joint. Joint shall prevent entrapment of air which might subsequently loosen the joint. Transformers shall be supported on a brick when located in light fixtures base.

3.20 RUNWAY AND TAXIWAY LIGHTING SYSTEMS

3.20.1 Runway and Taxiway Edge Lights

Edge lights shall be elevated type lights except in paved areas where semiflush lights are required. Elevated lights shall be frangibly mounted and each light supplied power through an isolation transformer. The taxiway lights shall be omnidirectional and only require leveling. The runway lights require leveling and alignment of the beams for the correct toe-in of the beams.

3.21 OMITTED

3.22 FIELD QUALITY CONTROL

The Contracting Officer shall be notified 5 working days prior to each test. Deficiencies found shall be corrected and tests repeated.

3.22.1 Operating Test

Each completed circuit installation shall be tested for operation. Equipment shall be demonstrated to operate in accordance with the requirements of this Section. One day and one night test shall be conducted for the Contracting Officer.

3.22.2 Distribution Conductors, 600-Volt Class

Test shall verify that no short circuits or accidental grounds exist using an instrument which applies a voltage of approximately 500 volts providing a direct reading in resistance.

3.22.3 Counterpoise System Test and Inspection

Continuity of counterpoise system shall be visually inspected at accessible locations. Continuity of counterpoise system to the vault grounding system shall be tested in manhole closest to the vault.

3.22.4 Progress Testing for Series Lighting Circuits

A megger test shall be conducted on each section of circuit or progressive combinations of sections as they are installed. Each section or progressive combination of sections shall be tested with a megohmmeter providing a voltage of approximately 1000 volts, a direct reading in resistance. Results shall be documented. Faults indicated by these tests shall be eliminated before proceeding with the circuit installation.

3.22.5 Electrical Acceptance Tests

Acceptance tests shall be performed for series and multiple airfield and heliport lighting circuits only on complete lighting circuits. Each series and multiple lighting circuit shall receive a high voltage insulation test.

3.22.5.1 Low-Voltage Continuity Tests

Each series circuit shall be tested for electrical continuity. Faults indicated by this test shall be eliminated before proceeding with the high-voltage insulation resistance test.

3.22.5.2 High-Voltage Insulation Resistance Tests

Each series lighting circuit shall be subjected to a high-voltage insulation resistance test by measurement of the insulation leakage current with a suitable high-voltage test instrument which has a steady, filtered direct current output voltage and limited current. High-voltage tester shall include an accurate voltmeter and microammeter for reading voltage applied to the circuit and resultant insulation leakage current. Voltages shall not exceed test values specified below.

a. Test Procedure: Both leads shall be disconnected from regulator output terminals and support so that air gaps of several inches exist between bare conductors and ground. Cable sheaths shall be cleaned and dried for a distance of 1 foot from ends of cables and exposed insulation at ends of cables. Ends of both conductors of the circuit shall be connected together and to high-voltage terminals of test equipment, and test voltage applied as specified in the following tabulation between conductors and ground for a period of 5 minutes.

	Test Voltage, dc	
Series Lighting Circuits	First Test on New Circuits	Test on Existing Circuits
High Intensity Series Lighting Circuits (5,000 volt leads, 500 and 200 watt transformers)	9000	5000
Medium Intensity Series Lighting Circuits (5,000 volt leads, 30/45 watt transformers)	6000	3000
600-Volt Circuits	1800	600

When additions are made to existing circuits, only new sections shall be tested in accordance with "First Test on New Circuits" in table above. To ensure reliable operation, complete circuit shall be tested at reduced voltages indicated above.

b. Leakage Current: Insulation leakage current shall be measured and recorded for each circuit after a 1 minute application of the test voltage. If leakage current exceeds values specified below, the circuit shall be sectionalized and retested and the defective

parts shall be repaired or replaced. Leakage current limits include allowances for the normal number of connectors and splices for each circuit as follows:

(1) Three microamperes for each 1000 feet of cable.

(2) Two microamperes for each 200-watt and each 500-watt 5,000-volt series transformer.

(3) Two microamperes for each 30/45-watt 5,000 volt series transformer.

If measured value of insulation leakage current exceeds calculated value, the circuit shall be sectionalized and tested as specified for each section. Defective components shall be repaired or replaced until repeated tests indicate an acceptable value of leakage current for the entire circuit.

3.22.6 Omitted
3.22.7 Omitted

3.22.8 Final Operating Tests

After completion of installations and the above tests, circuits, control equipment, and lights covered by the contract shall be demonstrated to be in acceptable operating condition. Each switch in the control tower lighting panels shall be operated so that each switch position is engaged at least twice. During this process, lights and associated equipment shall be observed to determine that each switch properly controls the corresponding circuit. Telephone or radio communication shall be provided between the operator and the observer. Tests shall be repeated from the alternate control station, from the remote control points, and again from the local control switches on the regulators. Each lighting circuit shall be tested by operating the lamps at maximum brightness for not less than 30 minutes. At the beginning and at the end of this test the correct number of lights shall be observed to be burning at full brightness. One day and one night operating test shall be conducted for the Contracting Officer.

-- End of Section --