US Army Corps
of Engineers
Savannah District

Seymour Johnson AFB
North Carolina

Solicitation Number
DACA21-03-R-0074
Dormitories
FY-04, Line Item VKAG053000
Volume I of II - Sections 00010 through 00800 and
Technical Provisions - Divisions 1 through 6
December 2003

COMPETITION WILL BE LIMITED TO 8(a) CERTIFIED FIRMS WITH AN OFFICE LOCATED WITHIN REGION IV (GA, AL, NC, TN, MS, FL, KY, SC) WHICH HAVE 236220 AMONG THEIR APPROVED NAICS CODES.

U.S. ARMY ENGINEER DISTRICT, SAVANNAH
CORPS OF ENGINEERS
100 WEST OGLETHORPE AVENUE
SAVANNAH, GEORGIA 31401-3640

TABLE OF CONTENTS

00010 Solicitation/Contract Form and Bidding Schedule

00100 Instructions, Conditions, and Notices to Offerors

00600 Representations and Certifications

00700 Contract Clauses

00800 Special Contract Requirements

Attachment 1 to Section 00800

Technical Specifications - Divisions 1 through 16

SOLICITATION, OFFER, AND AWARD *(Construction, Alteration, or Repair)*	1. SOLICITATION NO. DACA21-03-R-0074-0006	2. TYPE OF SOLICITATION [ ] SEALED BID (IFB) [X] NEGOTIATED *(RFP)*	3. DATE ISSUED 15-Dec-2003	PAGE OF PAGES 1 OF 166

IMPORTANT - The "offer" section on the reverse must be fully completed by offeror.

4. CONTRACT NO.	5. REQUISITION/PURCHASE REQUEST NO.	6. PROJECT NO.

7. ISSUED BY CODE DACA21	8. ADDRESS OFFER TO *(If Other Than Item 7)* CODE
A-E & CONSTRUCTION BRANCH 100 W. OGLETHORPE AVE SAVANNAH GA 31401-3640	**See Item 7**
TEL:(912)652-5075 FAX: (912)652-5828	TEL: FAX:

9. FOR INFORMATION CALL:	A. NAME	B. TELEPHONE NO. *(Include area code)* *(NO COLLECT CALLS)*
	DONNA S KNIGHT	(912)652-5504

SOLICITATION

NOTE: In sealed bid solicitations "offer" and "offeror" mean "bid" and "bidder".

10. THE GOVERNMENT REQUIRES PERFORMANCE OF THE WORK DESCRIBED IN THESE DOCUMENTS *(Title, identifying no., date):*

Dormitories
Seymour Johnson Air Force Base
North Carolina

Donna S. Knight, contract Specialist
donna.s.knight@sas02.usace.army.mil
(912) 652-5504

Kathleen Achord
kathleen.a.achord@sas02.usace.army.mil
(912) 652-5169

11. The Contractor shall begin performance within 5 calendar days and complete it within 365 calendar days after receiving [ ] award, [X] notice to proceed. This performance period is [X] mandatory, [ ] negotiable. *(See* Section 00800 *.)*

12 A. THE CONTRACTOR MUST FURNISH ANY REQUIRED PERFORMANCE AND PAYMENT BONDS? *(If "YES," indicate within how many calendar days after award in Item 12B.)* [X] YES [ ] NO	12B. CALENDAR DAYS 10

13. ADDITIONAL SOLICITATION REQUIREMENTS:

A. Sealed offers in original and 5 copies to perform the work required are due at the place specified in Item 8 by 02:00 PM *(hour)* local time 10 Feb 2004 *(date).* If this is a sealed bid solicitation, offers must be publicly opened at that time. Sealed envelopes containing offers shall be marked to show the offeror's name and address, the solicitation number, and the date and time offers are due.

B. An offer guarantee [X] is, [ ] is not required.

C. All offers are subject to the (1) work requirements, and (2) other provisions and clauses incorporated in the solicitation in full text or by reference.

D. Offers providing less than 90 calendar days for Government acceptance after the date offers are due will not be considered and will be rejected.

SOLICITATION, OFFER, AND AWARD (Continued)

(Construction, Alteration, or Repair)

OFFER ***(Must be fully completed by offeror)***

14. NAME AND ADDRESS OF OFFEROR *(Include ZIP Code)*		15. TELEPHONE NO. *(Include area code)*
		16. REMITTANCE ADDRESS *(Include only if different than Item 14)* **See Item 14**
CODE	FACILITY CODE	

17. The offeror agrees to perform the work required at the prices specified below in strict accordance with the terms of this solicitation, if this offer is accepted by the Government in writing within _____ calendar days after the date offers are due. *(Insert any number equal to or greater than the minimum requirements stated in Item 13D. Failure to insert any number means the offeror accepts the minimum in Item 13D.)*

AMOUNTS	SEE SCHEDULE OF PRICES

18. The offeror agrees to furnish any required performance and payment bonds.

19. ACKNOWLEDGMENT OF AMENDMENTS

(The offeror acknowledges receipt of amendments to the solicitation -- give number and date of each)

AMENDMENT NO.										
DATE										

20A. NAME AND TITLE OF PERSON AUTHORIZED TO SIGN OFFER *(Type or print)*	20B. SIGNATURE	20C. OFFER DATE

AWARD ***(To be completed by Government)***

21. ITEMS ACCEPTED:

22. AMOUNT	23. ACCOUNTING AND APPROPRIATION DATA

24. SUBMIT INVOICES TO ADDRESS SHOWN IN *(4 copies unless otherwise specified)*	**ITEM**	25. OTHER THAN FULL AND OPEN COMPETITION PURSUANT TO ☐ 10 U.S.C. 2304(c) ☐ 41 U.S.C. 253(c)
26. ADMINISTERED BY CODE		27. PAYMENT WILL BE MADE BY: CODE

CONTRACTING OFFICER WILL COMPLETE ITEM 28 OR 29 AS APPLICABLE

☐ 28. NEGOTIATED AGREEMENT *(Contractor is required to sign this document and return _ _ copies to issuing office.)* Contractor agrees to furnish and deliver all items or perform all work, requisitions identified on this form and any continuation sheets for the consideration stated in this contract. The rights and obligations of the parties to this contract shall be governed by (a) this contract award, (b) the solicitation, and (c) the clauses, representations, certifications, and specifications or incorporated by reference in or attached to this contract.		☐ 29. AWARD *(Contractor is not required to sign this document.)* Your offer on this solicitation, is hereby accepted as to the items listed. This award consummates the contract, which consists of (a) the Government solicitation and your offer, and (b) this contract award. No further contractual document is necessary.	
30A. NAME AND TITLE OF CONTRACTOR OR PERSON AUTHORIZED TO SIGN *(Type or print)*		31A. NAME OF CONTRACTING OFFICER *(Type or print)* TEL: EMAIL:	
30B. SIGNATURE	30C. DATE	31B. UNITED STATES OF AMERICA BY	31C. AWARD DATE

Section 00010 - Solicitation Contract Form

NOTICE TO OFFERORS

HAND-CARRIED OR MAILED PROPOSALS:

All proposals must be clearly identified with the contractor's name and address. To ensure timely and proper handling, the lower left corner of the outermost wrapper should indicate the Request For Proposal No., Due Date of Proposal, Time by which Proposals are Due, and Title of Project.

The Government will not be responsible for proposals delivered to any location or to anyone other than those designated to receive proposals on its behalf as indicated below.

Proposals delivered by commercial carrier and those sent by U.S. Mail, including U.S. Express Mail, must be addressed as indicated below. Proposals shall not be addressed to any specific person.

U.S. Army Engineer District, Savannah
ATTN: CESAS-CT-C
100 West Oglethorpe Avenue
Savannah, Georgia 31401-3640

Proposals sent by U.S. Mail or delivered by commercial carrier must be received by mailroom personnel on the first floor of 100 West Oglethorpe Avenue by the time specified in Block 13 of the SF1442 for receipt of proposals.

Offerors are cautioned that proposals sent via United States Postal Service Express Mail are first delivered to the Savannah District Post Office Box instead of 100 West Oglethorpe Avenue, "the office designated for receipt of proposals" therefore, allow sufficient mailing time.

Hand-carried proposals also must be delivered to mailroom personnel on the first floor of 100 West Oglethorpe Avenue by the time specified in Block 13 of SF1442 for receipt of proposals.

Offerors are cautioned that there is no parking in or around the building, therefore, when hand delivering proposals sufficient time should be allowed for transporting of proposal packages from your vehicle to mailroom personnel.

FACSIMILE MODIFICATIONS OF PROPOSALS ARE NOT AUTHORIZED.

QUALITY CONTROL SYSTEM (QCS): Any contract award resulting from this solicitation will require the mandatory use of the automated Quality Control System. Please see Section 01312A for additional information.

SUPPLIES OR SERVICES AND PRICES/COSTS

SCHEDULE

DORMITORIES
SEYMOUR JOHNSON AIR FORCE BASE
NORTH CAROLINA

TOTAL BASE BID (ITEMS 0001 AND 0002) ----------$_____

TOTAL BASE BID PLUS OPTIONS 1 THRU 8
(ITEMS 0001 THRU 0010) ----------$_____

ITEM NO	SUPPLIES/SERVICES	QUANTITY	UNIT	UNIT PRICE	AMOUNT
0001	BASE BID Construction of Dormitories, Complete to the 5-Foot Building Line	1	Lump Sum	XXXXXXXXXXXXX	$_____

ITEM NO	SUPPLIES/SERVICES	QUANTITY	UNIT	UNIT PRICE	AMOUNT
0002	BASE BID Site Work for Dormitories, Complete outside the 5-Foot Building Line, Including only seeding. No landscapinag and excluding Work in Options 1, 2, 3, 4, 5, 6, and 8	1	Lump Sum	XXXXXXXXXXXXX	$_____

ITEM NO	SUPPLIES/SERVICES	QUANTITY	UNIT	UNIT PRICE	AMOUNT
0003	OPTION 1 Landscaping and Sod in Lieu of Seeding, Complete, Except for Landscaping in Options 2, 3, 4, and 5	1	Lump Sum	XXXXXXXXXXXXX	$_____

ITEM NO	SUPPLIES/SERVICES	QUANTITY	UNIT	UNIT PRICE	AMOUNT
0004		1	Lump Sum	XXXXXXXXXXXXX	$_____
	OPTION 2 Dumpster Enclosure including landscaping in west parking island only, Complete				

ITEM NO	SUPPLIES/SERVICES	QUANTITY	UNIT	UNIT PRICE	AMOUNT
0005		1	Lump Sum	XXXXXXXXXXXXX	$_____
	OPTION 3 New Parking Lot Including Landscaping, Complete				

ITEM NO	SUPPLIES/SERVICES	QUANTITY	UNIT	UNIT PRICE	AMOUNT
0006		1	Lump Sum	XXXXXXXXXXXXX	$_____
	OPTION 4 Two Gazebos Including Landscaping, Complete				

ITEM NO	SUPPLIES/SERVICES	QUANTITY	UNIT	UNIT PRICE	AMOUNT
0007		1	Lump Sum	XXXXXXXXXXXXX	$_____
	OPTION 5 Basketball Court Including Landscaping, Complete				

ITEM NO	SUPPLIES/SERVICES	QUANTITY	UNIT	UNIT PRICE	AMOUNT
0008		1	Lump Sum	XXXXXXXXXXXXX	$_____
	OPTION 6 Overlay Existing Parking Lot, Complete				

ITEM NO	SUPPLIES/SERVICES	QUANTITY	UNIT	UNIT PRICE	AMOUNT
0009		1	Lump Sum	XXXXXXXXXXXXX	$_____
	OPTION 7 Storage Cabinet in Bath, Complete				

ITEM NO	SUPPLIES/SERVICES	QUANTITY	UNIT	UNIT PRICE	AMOUNT
0010		1	Lump Sum	XXXXXXXXXXXXX	$_____
	OPTION 8 10' Wide Concrete Walk, Complete				

Section 00100

INSTRUCTIONS, CONDITIONS, AND NOTICE TO OFFERORS

Dormitories Seymour Johnson AFB, NC
L.I. VKAG053000R1, FY-04

PERFORMANCE PRICE TRADE-OFF

1. PROPOSAL OVERVIEW. This Request for Proposal (RFP) solicits the construction of two 72-person dormitories at Seymour Johnson Air Force Base, Georgia. The contract will be a Firm-Fixed Price (FFP). The purpose of the Source Selection plan is to establish a uniform evaluation procedure for the technical evaluation of proposals by the Source Selection Evaluation Board (SSEB) and the development of the Best Value Decision by the Source Selection Authority (SSA) using the Trade-Off Process (See Federal Acquisition Regulation 15.101-1). In as much as the proposal shall describe the capability of the Offeror to perform any resulting contract, the proposal should be specific and complete in every detail. The proposal should be prepared simply and economically, providing a straightforward and concise description of capabilities to satisfactorily perform the contract. The proposal should be practical, legible, clear, and coherent.

1.1 Proposal Submissions and the Trade-Off Process. This process permits tradeoffs among cost or price and non-cost factors and allows the Government to accept other than the lowest priced proposal. Offerors submit their performance and capability information for review and consideration by the Government. Relative weights among technical factors are provided in paragraph 5 Evaluation Factors and Weights. The SSEB reviews, evaluates, and rates the proposals against the source selection criteria in the RFP. Concurrently, the Government analyzes price proposals of Offerors. Price will not be scored, but will be a factor in establishing the competitive range prior to discussions (if held) and in making the final best value determination for award. The SSA compares proposals to one another and determines the best value for the government. The perceived benefits of the higher priced proposal shall merit the additional cost, and the rationale for tradeoffs must be documented.

2. PROPOSAL SUBMISSION INSTRUCTIONS

2.1 Who May Submit. Any legally organized Offeror may submit a proposal.

2.2 Where to Submit. Offerors shall submit their proposals to the Savannah District at the address shown in Block 7 of the Standard Form 1442.

2.3 Submission Deadline. Proposals shall be received by the Savannah District no later than the time and date specified in Block 13 of Standard Form 1442.

2.4 General Requirements.

2.4.1 In order to effectively and equitably evaluate all proposals, the Contracting Officer must receive information containing sufficient detail to allow review and evaluation by the Government. Proposal clarity, organization, and cross-referencing are mandatory. Failure to submit and organize proposals as requested may adversely affect an Offeror's evaluation. Offerors should provide sufficient detail and clearly define all items required in this section.

2.4.2 Tabs. Proposal shall be organized and tabbed as shown in paragraph 2.5 Submission Format.

2.4.3 Size of Printed Matter Submissions.

2.4.3.1 Written materials shall be prepared on 8-1/2" x 11" paper.

2.4.3.2 The proposals shall contain a detailed table of contents. If more than one binder is used, the complete table of contents shall be included in each. Any materials submitted but not required by the solicitation, (such as company brochures), shall be relegated to appendices.

2.4.4 Number of Copies. Offerors shall submit one (1) hard copy of Volume I and five (5) hard copies of Volume II of their Proposal. Both volumes shall also be submitted on a CD-ROM.

2.5 Submission Format.

2.5.1 The Proposal will be tabbed and submitted in a three ring binders in the following format:

VOLUME I

TAB A – SF 1442, completed and signed by an authorized person from the company or team

TAB B – Section 00010 – Supplies or Services and Price/Costs Schedule

TAB C – Section 00600 – Representations and Certifications

TAB D – PROPOSAL DATA SHEET – See the format provided in this Section. Ensure to include Offeror's telephone number, e-mail address and DUNS number. Duns number will be used to accesses CCASS data.

TAB E – Bid Bond

TAB F – Financial Information (e.g. Latest Financial Statement, Annual Reports, Dun and Bradstreet ratings and/or number, etc.)

VOLUME II – Technical Proposal

THE TECHNICAL PROPOSAL SHALL NOT INCLUDE ANY COST INFORMATION.

TAB H – FACTOR 1: CONSTRUCTION PAST PERFORMANCE

TAB J – FACTOR 2: CORPORATE RELEVANT SPECIALIZED EXPERIENCE

TAB K – FACTOR 3: MANAGEMENT EFFECTIVENESS

TAB M – FACTOR 4: CONSTRUCTION DURATION

3. TECHNICAL PROPOSAL SUBMISSION REQUIREMENTS.

3.1 FACTOR 1: CONSTRUCTION PAST PERFORMANCE (VOLUME II, TAB H). Offerors shall be evaluated on construction projects successfully completed or substantially completed in the last three years. The Offeror's past performance in completing projects during the last three years will be evaluated to determine technical capability to perform the proposed contract and how well it satisfied its customers. The information presented in the Offeror's submittal, together with that from other sources available to the Government will comprise the input for evaluation of this factor. The following elements will be evaluated:

Quality of Construction
Timeliness of Performance

Customer Satisfaction
Subcontractor Management
Documentation

3.1.1 Offeror's Submission Requirements.

3.1.1.1 Past Performance Information Sheets. Offerors shall complete and provide a Past Performance Information Sheet on three projects described above. A sample Past Performance Information Sheet is included at the end of this section.

3.1.1.2 Past Performance Questionaires. Offeror's shall identify the completed projects (or substantially complete) as described above to be used for reference and evaluation purposes and provide a questionnaire to the Point of Contact for each project listed. A sample Past Performance Evaluation Questionnaire is included at the end of this section. When completed, these forms shall be mailed or emailed to the Savannah District Contract Specialist identified in the sample transmittal letter provided. It is the contractor's responsibility to ensure that the reference documentation is provided, as the Government may not make additional requests for past performance information from the references. The evaluation form shall be provided to the Savannah District Contract Specialist directly from the reference. Projects from which questionnaires are received shall have been completed or substantially completed within three years of the date of the solicitation.

3.1.1.3 Other Sources. The Government may contact sources other than those provided by the Offeror for information with respect to past performance. These other sources may include CCASS (Construction Contractor Appraisal Support System), telephone interviews with organizations familiar with the Offeror's performance, and Government personnel with personal knowledge of the Offeror's performance capability.

3.1.2 Evaluation. The Government will evaluate the Offeror's past performance using the sources available to it including but not limited to: the example projects identified by the Offeror, Past Performance Evaluation Questionnaires received, and CCASS. Offerors may be provided an opportunity to address any negative past performance information about which the Offeror has not previously had an opportunity to respond. The Government treats an Offeror's lack of past performance as having no positive or negative evaluation significance. The Government will evaluate past performance based on the elements listed below:

Quality of Construction. Based on information provided in the questionnaire and other information, the Government will assess the quality of the actual construction undertaken and the standards of workmanship exhibited by the Offeror's team.

Timeliness of Performance. The Government will evaluate all information available with respect to the Offeror completing past projects within the scheduled completion times.

Customer Satisfaction. The Government will evaluate all information available with respect to the Offeror's past customer satisfaction, cooperation with customers, and interaction on past projects.

Subcontractor Management. The Government will evaluate all information available with respect to the Offeror's management of subcontractors, including mitigation of conflicts and resolution of disputes at the lowest level.

Documentation. The Government will evaluate all information available with respect to the Offeror's level of meeting customer satisfaction on timeliness and quality of the documentation, reports, and other written materials completed by the Offeror on past projects.

3.2 FACTOR 2: CORPORATE RELEVANT SPECIALIZED EXPERIENCE (VOLUME II, TAB J). Offerors shall be evaluated on construction projects successfully completed or substantially completed in the last five (5) years that demonstrate the Offeror's specialized experience in the construction of similar construction projects. For this proposal, similar projects are projects that meet the following criteria:

construction value of at least $5 Million
construction projects using precast concrete panels
construction of dormitories, barracks, apartments, hotels or other corporate domiciles

3.2.1 Offeror's Submission Requirements. Offerors shall submit at least three Project Information Sheets for construction projects completed, or substantially complete, that reflect specialized experience in the construction elements referenced in paragraph 3.2 above. The examples should be as similar as possible to this solicitation in project type and scope. As a minimum, the Project Information Sheets shall provide: the Project Point of Contact with telephone number, general character of the project, scope, location, cost, and date of completion or anticipated completion. If the Offeror represents the combining of two or more companies for the purpose of this RFP, each company shall list project examples. Example projects must have been completed or substantially complete not later than five (5) years prior to the date of the solicitation. The experience of individuals will not be credited under this factor.

3.2.2 Evaluation. The Government will review the example construction projects provided by the Offeror to evaluate and rate the recent relevant specialized experience of the Offeror with similar projects. The example construction projects should closely resemble the scope, size, and complexity of the project identified in this solicitation. If the Offeror cannot provide suitable relevant experience and the evaluators consider that the information provided indicates that the Offeror has no relevant experience, a determination will be made as to the risk this lack of corporate experience presents to the Government and the proposal will be evaluated accordingly.

3.3 FACTOR 3: MANAGEMENT EFFECTIVENESS (VOLUME II, TAB K) . The Government will evaluate the Offeror's management effectiveness by considering the Offeror's understanding and capability of successfully managing the project to completion. The following elements will be evaluated:

Organizational Chart or Structure and Key Personnel Resumes.

3.3.1 Offeror's Submission Requirements.

3.3.1.1 Organizational Chart or Structure and Key Personnel Resumes. Provide an organizational chart or narrative that shows lines of authority and communication chain. "Key personnel" are defined as, but not limited to Construction Project Manager, Site Supervisor or Project Superintendent, Quality Control System Manager, and staff. Provide the following information on key personnel.

Name and Title
Specific assignment on this project
Name of Firm
Number of years with this firm/with other firms
Education - Degree(s)/year/specialization
Active registration: number/state/year
Specific experience and qualifications relevant to this project

Offerors are encouraged to provide descriptive analysis of why they feel their key personnel meet the criteria for key personnel experience.

3.3.2 Evaluation.

3.3.2.1 Organizational Chart or Structure and Key Personnel Resumes.

3.3.2.1.1 The organizational chart will be evaluated for chain of command, lines of normal communication and logical management structure.

3.3.2.1.2 The Government will review the key personnel provided by the Offeror to evaluate and rate the recent experience of the key personnel in similar projects. Resumes will be evaluated for qualifications and relevant

technical experience to this project. The key personnel example projects should closely resemble the project identified in this solicitation. If the Offeror cannot provide suitable key personnel with relevant experience and the evaluators consider that the information provided indicates that the key personnel have no relevant experience, a determination will be made as to the risk this lack of key personnel experience presents to the Government and the proposal will be evaluated acco

3.4 FACTOR 4: CONSTRUCTION DURATION (VOLUME II, TAB M). The Government's requirement is that all design and construction on this project be completed within 365 days of Notice to Proceed, inclusive of all review periods and Government phasing requirements specified. Offeror may propose a completion period of lesser duration. Completion periods of significantly lesser duration may be rated as more advantageous to the Government. Offers who propose completion of the work beyond the maximum completion period specified above, will be rated unsatisfactory for this factor.

3.4.1 Offeror's Submission Requirements.

3.4.1.1 Offeror's must show the proposed construction duration. This shall be shown in graphic form in a summary bar chart, which is part of the offeror's proposed NAS schedule.

3.4.1.2 If the Offeror proposes a completion period of lesser duration than the Government requirement, the following certification shall be completed and submitted:

Statement of Compliance

[Insert name of the Offeror] hereby proposes that the period of performance for all design and construction is _____calendar days from Notice to Proceed, inclusive of Government review periods and Government phasing requirements specified.

[Insert name of the Offeror] hereby certifies that the offer of this performance period is at no additional cost to the Government over the performance period specified as the minimum Government requirements.

_____

Signature and Date by Corporate Official

3.4.2 Evaluation. This factor will be evaluated by reviewing submitted scheduling documents. Completion periods of significantly lesser duration may be rated as more advantageous to the Government. Offers who propose completion of the work beyond the maximum completion period specified above, will be rated unsatisfactory for this factor.

4. EVALUATION STANDARDS. Evaluation criteria (factors) will be rated using the following adjectival descriptions. Evaluators will apply the appropriate adjective to each criterion rated. The evaluator's narrative explanation must clearly establish that the Offeror's submittal meets the definitions established below. As each criteria is evaluated an assessment of Performance Risk will be made. Performance Risk relates to the assessment of an Offeror's present and past work and accomplishments to determine the Offeror's ability to successfully perform as required.

4.1 OUTSTANDING - Information submitted demonstrates Offeror's potential to significantly exceed performance or capability standards. The Offeror has clearly demonstrated an understanding of all aspects of the requirements to the extent that timely and highest quality performance is anticipated. The Offeror possesses exceptional strengths that will significantly benefit the Government. The Offeror's qualifications meet the fullest expectations of the Government. The Offeror has convincingly demonstrated that the RFP requirements have been analyzed, evaluated, and synthesized into approaches, plans, and techniques that, when implemented, should result in highly effective

and efficient performance under the contract which represents very low risk to the Government. An assigned rating of “outstanding” indicates that, in terms of the specific factor, the submittal contains no significant weaknesses, deficiencies or disadvantages. Offeror very significantly exceeds most or all solicitation requirements. Very high probability of success. Very low risk to the Government.

4.2 ABOVE AVERAGE - Information submitted demonstrates Offeror's potential to exceed performance or capability standards. Offeror possesses one or more strengths that will benefit the Government. The areas in which the Offeror exceeds the requirements are anticipated to result in a high level of efficiency, productivity, or quality. The Offeror's qualifications are responsive with minor weaknesses, but no major weaknesses noted. An assigned rating of “Above Average” indicates that, in terms of the specific factor, any weaknesses noted are minor and should not seriously affect the offeror’s performance. The submittal demonstrates that the requirements of the RFP are well understood and the approach will likely result in a high quality of performance which represents low risk to the Government. A rating of “Above Average” is used when there are no indications of exceptional features or innovations that could prove to be beneficial, or conversely, weaknesses that could diminish the quality of the effort or increase the risks of failure. Disadvantages are minimal. The submittal contains excellent features that will likely produce results very beneficial to the Government. Offeror fully meets all RFP requirements and significantly exceeds many of the RFP requirements. Response exceeds a "Satisfactory" rating. High probability of success. Low risk to the Government.

4.3 SATISFACTORY (Neutral) - Information submitted demonstrates Offeror's potential to meet performance or capability standards. Offeror presents an acceptable solution and meets minimum standard requirements. Offeror possesses few or no advantages or strengths. The Offeror's proposal contains weaknesses in several areas that are offset by strengths in other areas. A rating of “Satisfactory” indicates that, in terms of the specific factor, the Offeror may satisfactorily complete the proposed tasks, but there is at least a moderate risk that it will not be successful. There is a good probability of success and that a fully acceptable level of performance will be achieved. Offeror meets all RFP requirements, presents a complete and comprehensive proposal, exemplifies an understanding of the scope and depth of the task requirements, and displays understanding of the Government's requirements. Offeror’s response exceeds a "Marginal" rating. No significant advantages or disadvantages. Moderate risk to the Government. In the case of no past performance on the part of the Offeror, a SATISFACTORY rating will be assigned for Past Performance.

4.4 MARGINAL - Information submitted demonstrates Offeror's potential to marginally meet performance or capability standards necessary for minimal but acceptable contract performance. The submittal is not adequately responsive or does not address the specific factor. The assignment of a rating of “Marginal” indicates that mandatory corrective action would be required to prevent significant deficiencies from affecting the overall project. The Offeror's qualifications demonstrate an acceptable understanding of the requirements of the RFP and the approach will likely result in an adequate quality of performance, which represents a moderate level of risk to the Government. Offeror displays low probability of success, although the submittal has a reasonable chance of becoming at least acceptable. Offeror’s response exceeds an "Unsatisfactory" rating. Significant disadvantages. High risk to the Government.

4.5 UNSATISFACTORY – Information submitted fails to meet performance or capability standards necessary for acceptable contractor performance. The Offeror’s interpretation of the Government’s requirements is so superficial, incomplete, vague, incompatible, incomprehensible, or incorrect as to be Unsatisfactory. The submittal does not meet the minimum requirements of the RFP; requirements could only be met with major changes to the submittal. There is no reasonable expectation that acceptable performance would be achieved which represents unacceptably high risk to the Government. The Offeror's qualifications have many deficiencies and/or gross omissions; fail to provide a reasonable, logical approach to fulfilling much of the Government's requirements; and, fail to meet many of the minimum requirements. The Offeror's qualifications are so unacceptable that it would have to be completely revised in order to attempt to make them acceptable. Very significant disadvantages. Unacceptably high risk to the Government.

5. EVALUATION FACTORS and WEIGHTS

5.1 Relative Importance Definition. For the purpose of this evaluation, the following terms will be used to establish the relative importance of the factors.

Significantly More Important: The criterion is at least two times greater in value than another criterion.

More Important: The criterion is greater in value than another criterion but less than two times greater.

Equal: The criterion is of the same value or nearly the same as another criterion.

5.2 PRICE is equal in importance to ALL TECHNICAL FACTORS when combined.

5.3 Weight among technical factors:

FACTOR 1: CONSTRUCTION PAST PERFORMANCE: This factor is more important than Factors 2 and Factors 3 and significantly more important than Factor 4.

FACTOR 2 CORPORATE RELEVANT SPECIALIZED EXPERIENCE: This factor is equal in importance to Factor 3 and is more important than Factor 4.

FACTOR 3: MANAGEMENT EFFECTIVENESS: This factor is equal in importance to Factor 2 and is more important than Factor 4.

FACTOR 4: CONSTRUCTION DURATION.

6. PROPOSAL EVALUATION.

6.1 Each member of the Government evaluation team (Source Selection Board) will independently consider all information provided in the proposal. Worksheets are provided on the following pages, which the evaluators will use to review and rate the individual proposals.

6.2 Once these individual analyses are completed, the team will meet and determine a rating for each of the evaluation factors by consensus decision.

6.3 The evaluation team will document strengths, weaknesses, and omissions to support the rating for each factor as well as the overall rating. Documentation and comments are required for all ratings.

6.4 This final overall rating, along with ratings on individual factors, will be provided to the Contracting Officer/Source Selection Authority for the best value decision.

7. EXCEPTIONS. Exceptions to the contractual terms and conditions of the solicitation (e.g., standard company terms and conditions) may result in a determination to reject a proposal.

8. RESTRICTIONS. Failure to submit all the data in this section in the format indicated may be cause for determining a proposal incomplete and, therefore, not considered for evaluation, and for subsequent award.

9. PRICE.

9.1 The Government will perform a price analysis on all proposals received. Price analysis will be performed in accordance with FAR 15.404-1, to determine completeness, reasonableness, and understanding of the work. The

evaluation will determine the adequacy of the offer in fulfilling the requirements of the proposal. Completeness addresses the extent to which the elements of the price proposal are consistent with the requirements of the RFP. Reasonableness will be established using historical price information, price competition information, the IGE, and any other pricing tools necessary.

9.2 Price will not be scored, but will be a factor in establishing the competitive range prior to discussions (if held) and in making the final best value determination for award.

10. BASIS FOR AWARD

10.1 Proposals must meet the criteria stated in the RFP in order to be eligible for award, to include responsiveness, technical acceptability and responsibility.

10.2 In order to determine which proposal represents the best overall value, the Government will compare proposals to one another. The Government will award a contract to the responsible Offeror whose technical submittal and price proposal contains the combination of those criteria described in this document offering the best overall value to the Government. Best value will be determined by a comparative assessment of proposals against all source selection criteria in this RFP.

10.3 As technical ratings and relative advantages and disadvantages become less distinct, differences in price between proposals are of increased importance in determining the most advantageous proposal. Conversely, as differences in price become less distinct, differences in scoring and relative advantages and disadvantages between proposals are of increased importance to the determination.

10.4 The Government reserves the right to accept other than the lowest priced offer. The right is also reserved to reject any and all offers. The basis of award will be a conforming offer, the price or cost of which may or may not be the lowest. If other than the lowest offer, it must be sufficiently more advantageous than the lowest offer to justify the payment of additional amounts.

10.5 Offerors are reminded to include their best technical and price terms in their initial offer and not to automatically assume that they will have an opportunity to participate in discussions or be asked to submit a revised offer. The Government may make award of a conforming proposal without discussions, if deemed to be within the best interests of the Government.

DORMITORIES, SEYMOUR JOHNSON AFB, NORTH CAROLINA

VOLUME I – TAB D
PROPOSAL DATA SHEET

1. Name of Firm:
   Address:

   Phone:
   Fax:
   E-mail:
   Duns # (used for accessing CCASS)

If a joint venture or contractor-subcontractor association of firms, list the individual firms and briefly describe the nature of the association.

Firm 1:

Firm 2:

Firm 3:

Nature of Association:

2. AUTHORIZED NEGOTIATORS. FAR 52.215-11

The Offeror represents that the following persons are authorized to negotiate on its behalf with the Government in connection with this Request for Proposals (RFP).

[List names, titles, and telephone number of the authorized negotiator.]

Name of Person Authorized to Negotiate:

Negotiator's Address:

Negotiator's Telephone:

Negotiator’s E-mail:

DORMITORIES, SEYMOUR JOHNSON AFB, NORTH CAROLINA

VOLUME II – TAB H

FACTOR 1: CONSTRUCTION PAST PERFORMANCE INFORMATION (Offerors should submit for at least three projects).

1. On an attached sheet, provide information for three in-progress or completed projects, preferably of similar design or features, that are being or have been constructed by the offeror to be used for reference and evaluation purposes. These should be the same projects for which questionnaires have been provided to the Procurement Point of Contact.

2. For each project provide the following information:

Project Title:

Location:

Contract number:

Procuring activity:

Procurement point of contact and telephone number:

List date of construction completion or percent completion if construction is underway:

Address of building(s):

Address and telephone number of owner:

Indicate type of project (private sector, Government, planned unit development, etc.):

General character:

Total cost:

Total cost of all modifications:

DORMITORIES, SEYMOUR JOHNSON AFB, NORTH CAROLINA
SAMPLE TRANSMITTAL LETTER
AND
PAST PERFORMANCE EVALUATION QUESTIONNAIRE

Date: _____

To: _____
_____
_____

We have listed your firm as a reference for work we have performed for you as listed below. Our firm has submitted a proposal under a project advertised by the U.S. Army Corps of Engineers, Savannah District. In accordance with Federal Acquisition Regulations (FAR), an evaluation of our firm's past performance will be completed by the Corps of Engineers. Your candid response to the attached questionnaire will assist the evaluation team in this process.

We understand that you have a busy schedule and your participation in this evaluation is greatly appreciated. Please complete the enclosed questionnaire as thoroughly as possible. Space is provided for comments. Understand that while the responses to this questionnaire may be released to the offeror, FAR 15.306 (e)(4) prohibits the release of the names of the persons providing the responses. Complete confidentiality will be maintained. Furthermore, a questionnaire has also been sent to _____ of your organization. Only one response from each office is required. If at all possible, we request that you individually answer this questionnaire and then coordinate your responses with that of _____, to develop a consensus on one overall response from your organization.

Please send your completed questionnaire to the following address to arrive NOT LATER THAN _____[DATE] _____:

Physical Address
US Army Engineer District, Savannah
CESAS-CT-C Donna Knight
100 West Oglethorpe Avenue
Savannah, Georgia 31402

Mailing Address
US Army Engineer District, Savannah
CESAS-CT-C Donna Knight
Post Office Box 889
Savannah, Georgia 31402-0889

The questionnaires can also be emailed to Donna S. Knight@sas02.usace.army.mil. If you have questions regarding the attached questionnaire, or require assistance, please contact Donna Knight at 912-652-5504. Thank you for your assistance.

DORMITORIES, SEYMOUR JOHNSON AFB, NORTH CAROLINA

PAST PERFORMANCE EVALUATION QUESTIONNAIRE

Upon completion of this form, please send directly to the U.S. Army Corps of Engineers in the enclosed addressed envelope Attn: Donna Knight or e-mail to donna.s.knight@sas02.usace.army.mil. Do not return this form to our offices. Thank you.

1. Contractor/Name & Address (City and State):

2. Type of Contract: Fixed Price _____ Cost Reimbursement _____

Other (Specify) _____

3. Title of Project/Contract Number:
_____

_____

_____

4. Description of Work: (Attach additional pages as necessary)

5. Complexity of Work: High _____ Mid _____ Routine _____

6. Location of Work:_____

7. Date of Award: _____

8. Status: Active _____ (provide percent complete)

Complete _____ (provide completion date)

9. Name, address and telephone number of Contracting Officer's Technical Representative:

DORMITORIES, SEYMOUR JOHNSON AFB, NORTH CAROLINA

10. QUALITY OF CONSTRUCTION:

Evaluate the contractor's performance in complying with contract requirements, quality achieved and overall technical expertise demonstrated.

Outstanding Quality	
Above Average Quality	
Satisfactory Quality	
Marginal Quality	
Unsatisfactory or Experienced Significant Quality Problems	

Remarks: _____

_____

_____

_____

11. TIMELINESS OF PERFORMANCE:

To what extent did the contractor meet the contract and/or individual task order schedules if the contract was an indefinite delivery type contract?

Completed Substantially Ahead of Schedule (Outstanding)	
Completed Ahead of Schedule (Above Average)	
Completed on Schedule with Minor Delays Under Extenuating Circumstances (Satisfactory)	
Completed Behind Schedule (Marginal)	
Experienced Significant Delays without Justification (Unsatisfactory)	

Remarks: _____

_____

_____

_____

DORMITORIES, SEYMOUR JOHNSON AFB, NORTH CAROLIINA

12. CUSTOMER SATISFACTION:

To what extent were the end users satisfied with:

	Quality	Cost	Schedule
Exceptionally Satisfied (Outstanding)			
Highly Satisfied (Above Average)			
Satisfied (Satisfactory)			
Somewhat Dissatisfied (Marginal)			
Highly Dissatisfied (Unsatisfactory)			

Remarks: _____

_____

_____

_____

13. SUBCONTRACTOR MANAGEMENT

How well did the contractor manage and coordinate subcontractors, suppliers, and the labor force?

Outstanding management and coordination of subcontractors	
Above Average management and coordination of subcontractors	
Satisfactory management and coordination of subcontractors	
Marginal management and coordination of subcontractors	
Unsatisfactory management and coordination of subcontractors	

Remarks: _____

_____

_____

_____

DORMITORIES, SEYMOUR JOHNSON AFB, NORTH CAROLINA

14. DOCUMENTATION

To what extent were the contractor's reports and documentation accurate, complete and were they submitted in a timely manner?

Outstanding Documentation	
Above Average Documentation	
Satisfactory Documentation	
Marginal Documentation	
Unsatisfactory Documentation	

Remarks: _____

_____

_____

15. IF GIVEN THE OPPORTUNITY, WOULD YOU WORK WITH THIS CONTRACTOR AGAIN?

Yes _____ No _____ Not Sure _____

16. OTHER REMARKS:

Use the space below to provide other information related to the contractor's performance. This may include the contractor's selection and management of subcontractors, flexibility in dealing with contract challenges, their overall concern for the Government's interest (if applicable), project awards received, etc.

_____

_____

_____

_____

_____

SAMPLE
(Offerors should submit for at least three projects)

DORMITORIES, SEYMOUR JOHNSON AFB, NORTH CAROLINA

VOLUME II – TAB J

FACTOR 2: CORPORATE SPECIALIZED RELEVANT EXPERIENCE.

On an attached sheet, provide information for in-progress or completed projects that are similar in terms of cost, complexity, design or features, (See elements identified in paragraph 3 of Section 00100) that have been constructed by the Offeror to be used for reference and evaluation purposes. For each project provide the following information:

Project Title:

Location:

Contract number:

Nature of involvement in this project, i.e. General Contractor, subcontractor, designer:

Procuring activity:

Procurement point of contact and telephone number:

List date of construction completion or percent completion if construction is underway:

Address of building(s):

Address and telephone number of owner:

Indicate type of project (private sector, Government, planned unit development, etc.):

General character:

Total cost:

Offeror: _____

Evaluator: _____

DORMITORIES, SEYMOUR JOHNSON AFB, NORTH CAROLINA
PROPOSAL RATING WORKSHEET

FACTOR 1 – OFFEROR PAST PERFORMANCE

1. GENERAL. The Government will evaluate each Offeror's past performance to determine how well it satisfied its customers. Evaluators will use this factor to evaluate the success of the Offeror based on the satisfaction of previous customers and clients as illustrated on the completed questionnaires, CCASS Ratings and personal knowledge. These completed questionnaires shall be used as a basis to begin the evaluation of this factor.

Has Government Received Three Completed Questionnaires for this Offeror? _____ YES ____ NO

Do All the Questionnaires Received Reflect Projects Completed or substantially compete within the Last Three Years? _____ YES ____ NO

2. CCASS RATINGS. The Contract Specialist will provide CCASS Ratings for the Offeror (and any other firms if a joint venture is offered).

Firm Name: _____

Number of Ratings:	Outstanding	_____
	Above Average	_____
	Satisfactory	_____
	Marginal	_____
	Unsatisfactory	_____

3. OTHER INFORMATION CONSIDERED. List all other sources of information considered (telephone interviews, personnel interviews, personal experience, etc.)

Offeror: _____

Evaluator: _____

DORMITORIES, SEYMOUR JOHNSON AFB, NORTH CAROLINA
PROPOSAL RATING WORKSHEET

FACTOR 1 – OFFEROR PAST PERFORMANCE (Continued)

OVERALL RATING.

/__/ Outstanding

/__/ Above Average

/__ / Satisfactory

/__ / Marginal

/__ / Unsatisfactory

Comments to support the OVERALL RATING

STRENGTHS.

WEAKNESSES.

OTHER COMMENTS.

Offeror: _____

Evaluator: _____

DORMITORIES, SEYMOUR JOHNSON AFB, NORTH CAROLINA

PROPOSAL RATING WORKSHEET
FACTOR 2 – CORPORATE RELEVANT SPECIALIZED EXPERIENCE

1. General: Completed DATA SHEETS shall be used as a basis to begin the evaluation of this factor.

Has Government Received Three Completed DATA SHEETS for Corporate Relevant Specialized Experience for this Offeror?

____ YES ___ NO

Do All the DATA SHEETS Received Reflect Projects Completed Within the Last Five Years? ____YES ____NO

OVERALL RATING.

/__/ Outstanding

/__/ Above Average

/__ / Satisfactory

/__ / Marginal

/__ / Unsatisfactory

Comments to support the OVERALL RATING

STRENGTHS.

WEAKNESSES.

OTHER COMMENTS.

Offeror: _____

Evaluator: _____

DORMITORIES, SEYMOUR JOHNSON AFB, NORTH CAROLINA

PROPOSAL RATING WORKSHEET
FACTOR 3 – MANAGEMENT EFFECTIVENESS

OVERALL RATING.

/__/ Outstanding

/__/ Above Average

/__ / Satisfactory

/__ / Marginal

/__ / Unsatisfactory

Comments to support the OVERALL RATING

STRENGTHS.

WEAKNESSES.

OTHER COMMENTS.

Offeror: _____

Evaluator:_____

DORMITORIES, SEYMOUR JOHNSON AFB, NORTH CAROLINA

PROPOSAL RATING WORKSHEET
FACTOR 4 – CONSTRUCTION DURATION

OVERALL RATING.

/__/ Outstanding

/__/ Above Average

/__ / Satisfactory

/__ / Marginal

/__ / Unsatisfactory

Comments to support the OVERALL RATING

STRENGTHS.

WEAKNESSES.

OTHER COMMENTS.

Offeror: _____

Evaluator: _____

DORMITORIES, SEYMOUR JOHNSON AFB, NORTH CAROLINA

Summary and Overall Rating

SUMMARY RATING CHART			
FACTOR No.	Description	Rating*	Comments
1	Construction Past Performance		
2	Corporate Relevant Specialized Experience		
3	Offeror Management Effectiveness		
4	Construction Duration		
OVERALL TECHNICAL RATING**			

* Ratings may be either:

Outstanding – Above Average – Satisfactory – Marginal – Unsatisfactory

** Evaluators shall consider the ratings and weights of the various criteria shown to determine a suitable overall rating. The overall rating cannot be an average, mode, or median of the ratings of the four factors.

Attach additional sheets to this rating summary to provide supporting rationale for assignment of ratings.

_____
Board Member Signature

Offeror _____ Board Chairperson_____

DORMITORIES, SEYMOUR JOHNSON AFB, NORTH CAROLINA

FACTOR No.	Description	Board Member 1	Board Member 2	Board Member 3	CONSENSUS	Comments
1	Offeror Past Performance*					
2	Corporate Relevant Specialized Experience*					
3	Management Effectiveness*					
4	Construction Duration*					
OVERALL RATING**						

_____ _____
Board Member 1 Board Member 2

_____ _____
Board Member 3 Board Member 4

Offeror: _____

DORMITORIES, SEYMOUR JOHNSON AFB, NORTH CAROLINA
CONSENSUS RATINGS

FACTOR 1 – OFFEROR PAST PERFORMANCE

STRENGTHS:

WEAKNESSES:

OTHER COMMENTS

FACTOR 2 – CORPORATE RELEVANT SPECIALIZED EXPERIENCE

STRENGTHS:

WEAKNESSES:

OTHER COMMENTS

Offeror: _____

DORMITORIES, SEYMOUR JOHNSON AFB, NORTH CAROLINA

CONSENSUS RATINGS
(Continued)

FACTOR 3 – OFFEROR MANAGEMENT EFFECTIVENESS

STRENGTHS:

WEAKNESSES:

OTHER COMMENTS

FACTOR 4 – CONSTRUCTION DURATION

STRENGTHS:

WEAKNESSES:

OTHER COMMENTS

CLAUSES INCORPORATED BY FULL TEXT

52.204-6 DATA UNIVERSAL NUMBERING SYSTEM (DUNS) NUMBER (OCT 2003)

(a) The offeror shall enter, in the block with its name and address on the cover page of its offer, the annotation “DUNS” or “DUNS+4” followed by the DUNS number or “DUNS+4” that identifies the offeror's name and address exactly as stated in the offer. The DUNS number is a nine-digit number assigned by Dun and Bradstreet, Inc. The DUNS+4 is the DUNS number plus a 4-character suffix that may be assigned at the discretion of the offeror to establish additional CCR records for identifying alternative Electronic Funds Transfer (EFT) accounts (see Subpart 32.11) for the same parent concern.

(b) If the offeror does not have a DUNS number, it should contact Dun and Bradstreet directly to obtain one.

(1) An offeror may obtain a DUNS number--

(i) If located within the United States, by calling Dun and Bradstreet at 1-866-705-5711 or via the Internet at http://www.dnb.com; or

(ii) If located outside the United States, by contacting the local Dun and Bradstreet office.

(2) The offeror should be prepared to provide the following information:

(i) Company legal business name.

(ii) Tradestyle, doing business, or other name by which your entity is commonly recognized.

(iii) Company physical street address, city, state and Zip Code.

(iv) Company mailing address, city, state and Zip Code (if separate from physical).

(v) Company telephone number.

(vi) Date the company was started.

(vii) Number of employees at your location.

(viii) Chief executive officer/key manager.

(ix) Line of business (industry).

(x) Company Headquarters name and address (reporting relationship within your entity).

(End of provision)

52.211-2 AVAILABILITY OF SPECIFICATIONS LISTED IN THE DOD INDEX OF SPECIFICATIONS AND STANDARDS (DODISS) AND DESCRIPTIONS LISTED IN THE ACQUISITION MANAGEMENT SYSTEMS AND DATA REQUIREMENTS CONTROL LIST, DOD 5010.12-L (JAN 2004)

Copies of specifications, standards, and data item descriptions cited in this solicitation may be obtained--

(a) From the ASSIST database via the Internet at http://assist.daps.dla.mil; or

(b) By submitting a request to the--Department of Defense Single Stock Point (DoDSSP), Building 4, Section D, 700 Robbins Avenue, Philadelphia, PA 19111-5094, Telephone (215) 697-2179, Facsimile (215) 697-1462.

(End of provision)

52.211-14 NOTICE OF PRIORITY RATING FOR NATIONAL DEFENSE USE (SEP 1990)

Any contract awarded as a result of this solicitation will be DO rated order certified for national defense use under the Defense Priorities and Allocations System (DPAS) (15 CFR 700), and the Contractor will be required to follow all of the requirements of this regulation. [Contracting Officer check appropriate box.]

(End of provision)

52.214-5000 APPARENT CLERICAL MISTAKES (MAR 1995)--EFARS

(a) For the purpose of initial evaluations of bids, the following will be utilized in the resolving arithmetic discrepancies found on the face of bidding schedule as submitted by the bidder:

(1) Obviously misplaced decimal points will be corrected;

(2) Discrepancy between unit price and extended price, the unit price will govern;

(3) Apparent errors in extension of unit prices will be corrected;

(4) Apparent errors in addition of lump-sum and extended prices will be corrected.

(b) For the purpose of bid evaluation, the government will proceed on the assumption that the bidder intends his bid to be evaluated on basis of the unit prices, the totals arrived at by resolution of arithmetic discrepancies as provided above and the bid will be so reflected on the abstract of bids.

(c) These correction procedures shall not be used to resolve any ambiguity concerning which bid is low.

(End of statement)

52.215-1 INSTRUCTIONS TO OFFERORS--COMPETITIVE ACQUISITION (MAY 2001)

(a) Definitions. As used in this provision--

“Discussions” are negotiations that occur after establishment of the competitive range that may, at the Contracting Officer's discretion, result in the offeror being allowed to revise its proposal.

“In writing or written” means any worded or numbered expression which can be read, reproduced, and later communicated, and includes electronically transmitted and stored information.

“Proposal modification” is a change made to a proposal before the solicitation's closing date and time, or made in response to an amendment, or made to correct a mistake at any time before award.

“Proposal revision” is a change to a proposal made after the solicitation closing date, at the request of or as allowed by a Contracting Officer as the result of negotiations.

“Time”, if stated as a number of days, is calculated using calendar days, unless otherwise specified, and will include Saturdays, Sundays, and legal holidays. However, if the last day falls on a Saturday, Sunday, or legal holiday, then the period shall include the next working day.

(b) Amendments to solicitations. If this solicitation is amended, all terms and conditions that are not amended remain unchanged. Offerors shall acknowledge receipt of any amendment to this solicitation by the date and time specified in the amendment(s).

(c) Submission, modification, revision, and withdrawal of proposals. (1) Unless other methods (e.g., electronic commerce or facsimile) are permitted in the solicitation, proposals and modifications to proposals shall be submitted in paper media in sealed envelopes or packages (i) addressed to the office specified in the solicitation, and (ii) showing the time and date specified for receipt, the solicitation number, and the name and address of the offeror. Offerors using commercial carriers should ensure that the proposal is marked on the outermost wrapper with the information in paragraphs (c)(1)(i) and (c)(1)(ii) of this provision.

(2) The first page of the proposal must show--

(i) The solicitation number;

(ii) The name, address, and telephone and facsimile numbers of the offeror (and electronic address if available);

(iii) A statement specifying the extent of agreement with all terms, conditions, and provisions included in the solicitation and agreement to furnish any or all items upon which prices are offered at the price set opposite each item;

(iv) Names, titles, and telephone and facsimile numbers (and electronic addresses if available) of persons authorized to negotiate on the offeror's behalf with the Government in connection with this solicitation; and

(v) Name, title, and signature of person authorized to sign the proposal. Proposals signed by an agent shall be accompanied by evidence of that agent's authority, unless that evidence has been previously furnished to the issuing office.

(3) Submission, modification, or revision, of proposals.

(i) Offerors are responsible for submitting proposals, and any modifications, or revisions, so as to reach the Government office designated in the solicitation by the time specified in the solicitation. If no time is specified in the solicitation, the time for receipt is 4:30 p.m., local time, for the designated Government office on the date that proposal or revision is due.

(ii)(A) Any proposal, modification, or revision received at the Government office designated in the solicitation after the exact time specified for receipt of offers is “late” and will not be considered unless it is received before award is made, the Contracting Officer determines that accepting the late offer would not unduly delay the acquisition; and--

(1) If it was transmitted through an electronic commerce method authorized by the solicitation, it was received at the initial point of entry to the Government infrastructure not later than 5:00 p.m. one working day prior to the date specified for receipt of proposals; or

(2) There is acceptable evidence to establish that it was received at the Government installation designated for receipt of offers and was under the Government's control prior to the time set for receipt of offers; or

(3) It is the only proposal received.

(B) However, a late modification of an otherwise successful proposal that makes its terms more favorable to the Government, will be considered at any time it is received and may be accepted.

(iii) Acceptable evidence to establish the time of receipt at the Government installation includes the time/date stamp of that installation on the proposal wrapper, other documentary evidence of receipt maintained by the installation, or oral testimony or statements of Government personnel.

(iv) If an emergency or unanticipated event interrupts normal Government processes so that proposals cannot be received at the office designated for receipt of proposals by the exact time specified in the solicitation, and urgent Government requirements preclude amendment of the solicitation, the time specified for receipt of proposals will be deemed to be extended to the same time of day specified in the solicitation on the first work day on which normal Government processes resume.

(v) Proposals may be withdrawn by written notice received at any time before award. Oral proposals in response to oral solicitations may be withdrawn orally. If the solicitation authorizes facsimile proposals, proposals may be withdrawn via facsimile received at any time before award, subject to the conditions specified in the provision at 52.215-5, Facsimile Proposals. Proposals may be withdrawn in person by an offeror or an authorized representative, if the identity of the person requesting withdrawal is established and the person signs a receipt for the proposal before award.

(4) Unless otherwise specified in the solicitation, the offeror may propose to provide any item or combination of items.

(5) Offerors shall submit proposals in response to this solicitation in English, unless otherwise permitted by the solicitation, and in U.S. dollars, unless the provision at FAR 52.225-17, Evaluation of Foreign Currency Offers, is included in the solicitation.

(6) Offerors may submit modifications to their proposals at any time before the solicitation closing date and time, and may submit modifications in response to an amendment, or to correct a mistake at any time before award.

(7) Offerors may submit revised proposals only if requested or allowed by the Contracting Officer.

(8) Proposals may be withdrawn at any time before award. Withdrawals are effective upon receipt of notice by the Contracting Officer.

(d) Offer expiration date. Proposals in response to this solicitation will be valid for the number of days specified on the solicitation cover sheet (unless a different period is proposed by the offeror).

(e) Restriction on disclosure and use of data. Offerors that include in their proposals data that they do not want disclosed to the public for any purpose, or used by the Government except for evaluation purposes, shall--

(1) Mark the title page with the following legend: This proposal includes data that shall not be disclosed outside the Government and shall not be duplicated, used, or disclosed--in whole or in part--for any purpose other than to evaluate this proposal. If, however, a contract is awarded to this offeror as a result of--or in connection with-- the submission of this data, the Government shall have the right to duplicate, use, or disclose the data to the extent provided in the resulting contract. This restriction does not limit the Government's right to use information contained in this data if it is obtained from another source without restriction. The data subject to this restriction are contained in sheets [insert numbers or other identification of sheets]; and

(2) Mark each sheet of data it wishes to restrict with the following legend: Use or disclosure of data contained on this sheet is subject to the restriction on the title page of this proposal.

(f) Contract award. (1) The Government intends to award a contract or contracts resulting from this solicitation to the responsible offeror(s) whose proposal(s) represents the best value after evaluation in accordance with the factors and subfactors in the solicitation.

(2) The Government may reject any or all proposals if such action is in the Government's interest.

(3) The Government may waive informalities and minor irregularities in proposals received.

(4) The Government intends to evaluate proposals and award a contract without discussions with offerors (except clarifications as described in FAR 15.306(a)). Therefore, the offeror's initial proposal should contain the offeror's best terms from a cost or price and technical standpoint. The Government reserves the right to conduct discussions if the Contracting Officer later determines them to be necessary. If the Contracting Officer determines that the number of proposals that would otherwise be in the competitive range exceeds the number at which an efficient competition can be conducted, the Contracting Officer may limit the number of proposals in the competitive range to the greatest number that will permit an efficient competition among the most highly rated proposals.

(5) The Government reserves the right to make an award on any item for a quantity less than the quantity offered, at the unit cost or prices offered, unless the offeror specifies otherwise in the proposal.

(6) The Government reserves the right to make multiple awards if, after considering the additional administrative costs, it is in the Government's best interest to do so.

(7) Exchanges with offerors after receipt of a proposal do not constitute a rejection or counteroffer by the Government.

(8) The Government may determine that a proposal is unacceptable if the prices proposed are materially unbalanced between line items or subline items. Unbalanced pricing exists when, despite an acceptable total evaluated price, the price of one or more contract line items is significantly overstated or understated as indicated by the application of cost or price analysis techniques. A proposal may be rejected if the Contracting Officer determines that the lack of balance poses an unacceptable risk to the Government.

(9) If a cost realism analysis is performed, cost realism may be considered by the source selection authority in evaluating performance or schedule risk.

(10) A written award or acceptance of proposal mailed or otherwise furnished to the successful offeror within the time specified in the proposal shall result in a binding contract without further action by either party.

(11) The Government may disclose the following information in postaward debriefings to other offerors:

(i) The overall evaluated cost or price and technical rating of the successful offeror;

(ii) The overall ranking of all offerors, when any ranking was developed by the agency during source selection;

(iii) A summary of the rationale for award; and

(iv) For acquisitions of commercial items, the make and model of the item to be delivered by the successful offeror.

(End of provision)

52.216-1 TYPE OF CONTRACT (APR 1984)

The Government contemplates award of a Firm-Fixed Price contract resulting from this solicitation.

(End of clause)

52.217-5 EVALUATION OF OPTIONS (JUL 1990)

Except when it is determined in accordance with FAR 17.206(b) not to be in the Government's best interests, the Government will evaluate offers for award purposes by adding the total price for all options to the total price for the basic requirement. Evaluation of options will not obligate the Government to exercise the option(s).

(End of provision)

52.219-4001 SUBCONTRACTING PLAN FOR SMALL BUSINESS CONCERNS
(JAN 2004 CESAS-CT)

(a) In accordance with FAR Clause 52.219-9, large businesses must submit a subcontracting plan. A sample subcontracting plan is located in Section 00800.

(b) The subcontracting targets (expressed in terms of percentages of total planned subcontracting dollars) of the Savannah District are as follows:

Small Business	-	57.2%
Small Disadvantaged Business	-	10.0%
HUBZone Small Business		3.0%
Women-Owned Business	-	10.0%
Veteran-Owned Small Business		0%*
Service-Disabled Veteran-Owned Small Business	-	3.0%**

If you cannot reach the above-stated targets, you must provide written justification with your subcontracting plan detailing the reasons you cannot meet the requirements.

*(c) While Savannah District does not have a specific target for subcontracting with Veteran-Owned small businesses, this must be addressed in any subcontracting plan.

**(d) Service-disabled Veteran-owned Small Business (SD/VOSB) is a composite of Veteran-Owned Small Business. The SD/VOSB target must be included in the Veteran-Owned small business target.

52.222-23 NOTICE OF REQUIREMENT FOR AFFIRMATIVE ACTION TO ENSURE EQUAL EMPLOYMENT OPPORTUNITY FOR CONSTRUCTION (FEB 1999)

(a) The offeror's attention is called to the Equal Opportunity clause and the Affirmative Action Compliance Requirements for Construction clause of this solicitation.

(b) The goals for minority and female participation, expressed in percentage terms for the Contractor's aggregate workforce in each trade on all construction work in the covered area, are as follows:

Goals for minority participation for each trade	Goals for female participation for each trade
31.7%	6.9%

These goals are applicable to all the Contractor's construction work performed in the covered area. If the Contractor performs construction work in a geographical area located outside of the covered area, the Contractor shall apply

the goals established for the geographical area where the work is actually performed. Goals are published periodically in the Federal Register in notice form, and these notices may be obtained from any Office of Federal Contract Compliance Programs office.

(c) The Contractor's compliance with Executive Order 11246, as amended, and the regulations in 41 CFR 60-4 shall be based on (1) its implementation of the Equal Opportunity clause, (2) specific affirmative action obligations required by the clause entitled "Affirmative Action Compliance Requirements for Construction," and (3) its efforts to meet the goals. The hours of minority and female employment and training must be substantially uniform throughout the length of the contract, and in each trade. The Contractor shall make a good faith effort to employ minorities and women evenly on each of its projects. The transfer of minority or female employees or trainees from Contractor to Contractor, or from project to project, for the sole purpose of meeting the Contractor's goals shall be a violation of the contract, Executive Order 11246, as amended, and the regulations in 41 CFR 60-4. Compliance with the goals will be measured against the total work hours performed.

(d) The Contractor shall provide written notification to the Deputy Assistant Secretary for Federal Contract Compliance, U.S. Department of Labor, within 10 working days following award of any construction subcontract in excess of $10,000 at any tier for construction work under the contract resulting from this solicitation. The notification shall list the --

(1) Name, address, and telephone number of the subcontractor;

(2) Employer's identification number of the subcontractor;

(3) Estimated dollar amount of the subcontract;

(4) Estimated starting and completion dates of the subcontract; and

(5) Geographical area in which the subcontract is to be performed.

(e) As used in this Notice, and in any contract resulting from this solicitation, the "covered area" is North Carolina, Wayne County, Seymour Johnson Air Force Base, Goldsboro.

(End of provision)

52.225-12 NOTICE OF BUY AMERICAN ACT REQUIREMENT-- CONSTRUCTION MATERIALS UNDER TRADE AGREEMENTS (MAY 2002)

(a) Definitions. Construction material, designated country construction material, domestic construction material, foreign construction material, and NAFTA country construction material, as used in this provision, are defined in the clause of this solicitation entitled “Buy American Act --Construction Materials under Trade Agreements” (Federal Acquisition Regulation (FAR) clause 52.225-11).

(b) Requests for determination of inapplicability. An offeror requesting a determination regarding the inapplicability of the Buy American Act should submit the request to the Contracting Officer in time to allow a determination before submission of offers. The offeror shall include the information and applicable supporting data required by paragraphs (c) and (d) of FAR clause 52.225-11 in the request. If an offeror has not requested a determination regarding the inapplicability of the Buy American Act before submitting its offer, or has not received a response to a previous request, the offeror shall include the information and supporting data in the offer.

(c) Evaluation of offers. (1) The Government will evaluate an offer requesting exception to the requirements of the Buy American Act, based on claimed unreasonable cost of domestic construction materials, by adding to the offered

price the appropriate percentage of the cost of such foreign construction material, as specified in paragraph (b)(4)(i) of FAR clause 52.225-11.

(2) If evaluation results in a tie between an offeror that requested the substitution of foreign construction material based on unreasonable cost and an offeror that did not request an exception, the Contracting Officer will award to the offeror that did not request an exception based on unreasonable cost.

(d) Alternate offers. (1) When an offer includes foreign construction material, other than designated country or NAFTA country construction material, that is not listed by the Government in this solicitation in paragraph (b)(3) of FAR clause 52.225-11, the offeror also may submit an alternate offer based on use of equivalent domestic, designated country, or NAFTA country construction material.

(2) If an alternate offer is submitted, the offeror shall submit a separate Standard Form 1442 for the alternate offer, and a separate price comparison table prepared in accordance with paragraphs (c) and (d) of FAR clause 52.225-11 for the offer that is based on the use of any foreign construction material for which the Government has not yet determined an exception applies.

(3) If the Government determines that a particular exception requested in accordance with paragraph (c) of FAR clause 52.225-11 does not apply, the Government will evaluate only those offers based on use of the equivalent domestic, designated country, or NAFTA country construction material, and the offeror shall be required to furnish such domestic, designated country, or NAFTA country construction material. An offer based on use of the foreign construction material for which an exception was requested--

(i) Will be rejected as nonresponsive if this acquisition is conducted by sealed bidding; or

(ii) May be accepted if revised during negotiations.

(End of provision)

52.232-4006 SUBJECT TO AVAILABILITY OF FUNDS STATEMENT (SEP 1999 SASCT) (Ref. AFARS 5101.602-2)

This is a high priority requirement as defined in Army Federal Acquisition Regulation (AFAR) Supplement 5101.602-2. Subject to the availability of funds, the accounting classification will be 57 4 3300 408 9021 P321 3230 S09133. This statement is not a commitment of funds. Funds are not presently available for this acquisition. No contract award will be made until appropriated funds are made available from which payment for contract purposes can be made.

(End of provision)

52.233-2 SERVICE OF PROTEST (AUG 1996)

(a) Protests, as defined in section 33.101 of the Federal Acquisition Regulation, that are filed directly with an agency, and copies of any protests that are filed with the General Accounting Office (GAO), shall be served on the Contracting Officer (addressed as follows) by obtaining written and dated acknowledgment of receipt from

District Engineer
US Army Corps of Engineers
Attn: CESAS-CT-C

100 West Oglethorpe Avenue
Savannah, Georgia 31401-3640

(b) The copy of any protest shall be received in the office designated above within one day of filing a protest with the GAO.

(End of provision)

52.236-27 SITE VISIT (CONSTRUCTION) (FEB 1995)

(a) The clauses at 52.236-2, Differing Site Conditions, and 52.236-3, Site Investigations and Conditions Affecting the Work, will be included in any contract awarded as a result of this solicitation. Accordingly, offerors or quoters are urged and expected to inspect the site where the work will be performed.

(b) Site visits may be arranged during normal duty hours by contacting:

US Army Corps of Engineers
Seymour Johnson Air Force Base
Resident Engineer Office
Resident Engineer (CD-PSJ)
Attn: Steve Blanchard
Post Office Box 10508
Goldsboro, North Carolina 27532-0508
(919) 722-5869 or 5865

(End of provision)

52.236-28 PREPARATION OF PROPOSALS--CONSTRUCTION (OCT 1997)

(a) Proposals must be (1) submitted on the forms furnished by the Government or on copies of those forms, and (2) manually signed. The person signing a proposal must initial each erasure or change appearing on any proposal form.

(b) The proposal form may require offerors to submit proposed prices for one or more items on various bases, including--

(1) Lump sum price;

(2) Alternate prices;

(3) Units of construction; or

(4) Any combination of paragraphs (b)(1) through (b)(3) of this provision.

(c) If the solicitation requires submission of a proposal on all items, failure to do so may result in the proposal being rejected without further consideration. If a proposal on all items is not required, offerors should insert the words “no proposal” in the space provided for any item on which no price is submitted.

(d) Alternate proposals will not be considered unless this solicitation authorizes their submission.

(End of provision)

52.236-4011 Disclosure of Magnitude of Construction (FAR 36.204 and DFARS 236.204)

The estimated price range for this project is between $5,000,000 and $10,000,000.

(End of Provision)

.

Section 00600 - Representations & Certifications

CLAUSES INCORPORATED BY FULL TEXT

52.203-2 CERTIFICATE OF INDEPENDENT PRICE DETERMINATION (APR 1985)

(a) The offeror certifies that --

(1) The prices in this offer have been arrived at independently, without, for the purpose of restricting competition, any consultation, communication, or agreement with any other offeror or competitor relating to –

(i) Those prices,

(ii) The intention to submit an offer, or

(iii) The methods of factors used to calculate the prices offered:

(2) The prices in this offer have not been and will not be knowingly disclosed by the offeror, directly or indirectly, to any other offeror or competitor before bid opening (in the case of a sealed bid solicitation) or contract award (in the case of a negotiated solicitation) unless otherwise required by law; and

(3) No attempt has been made or will be made by the offeror to induce any other concern to submit or not to submit an offer for the purpose of restricting competition.

(b) Each signature on the offer is considered to be a certification by the signatory that the signatory --

(1) Is the person in the offeror's organization responsible for determining the prices offered in this bid or proposal, and that the signatory has not participated and will not participate in any action contrary to subparagraphs (a)(1) through (a)(3) of this provision; or

(2) (i) Has been authorized, in writing, to act as agent for the following principals in certifying that those principals have not participated, and will not participate in any action contrary to subparagraphs (a)(1) through (a)(3) of this provison _____ (insert full name of person(s) in the offeror's organization responsible for determining the prices offered in this bid or proposal, and the title of his or her position in the offeror's organization);

(ii) As an authorized agent, does certify that the principals named in subdivision (b)(2)(i) above have not participated, and will not participate, in any action contrary to subparagraphs (a)(1) through (a)(3) above; and

(iii) As an agent, has not personally participated, and will not participate, in any action contrary to subparagraphs (a)(1) through (a)(3) of this provision.

(c) If the offeror deletes or modifies subparagraph (a)(2) of this provision, the offeror must furnish with its offer a signed statement setting forth in detail the circumstances of the disclosure.

(End of clause)

52.203-11 CERTIFICATION AND DISCLOSURE REGARDING PAYMENTS TO INFLUENCE CERTAIN FEDERAL TRANSACTIONS (APR 1991)

(a) The definitions and prohibitions contained in the clause, at FAR 52.203-12, Limitation on Payments to Influence

Certain Federal Transactions, included in this solicitation, are hereby incorporated by reference in paragraph (b) of this Certification.

(b) The offeror, by signing its offer, hereby certifies to the best of his or her knowledge and belief that on or after December 23, 1989,--

(1) No Federal appropriated funds have been paid or will be paid to any person for influencing or attempting to influence an officer or employee of any agency, a Member of Congress, an officer or employee of Congress, or an employee of a Member of Congress on his or her behalf in connection with the awarding of any Federal contract, the making of any Federal grant, the making of any Federal loan, the entering into of any cooperative agreement, and the extension, continuation, renewal, amendment or modification of any Federal contract, grant, loan, or cooperative agreement;

(2) If any funds other than Federal appropriated funds (including profit or fee received under a covered Federal transaction) have been paid, or will be paid to any person for influencing or attempting to influence an officer or employee of any agency, a Member of Congress, an officer or employee of Congress or an employee of a Member of Congress on his or her behalf in connection with this solicitation, the offeror shall complete and submit, with its offer, OMB standard form LLL, Disclosure of Lobbying Activities, to the Contracting Officer; and

(3) He or she will include the language of this certification in all subcontract awards at any tier and require that all recipients of subcontract awards in excess of $100,000 shall certify and disclose accordingly.

52 Submission of this certification and disclosure is a prerequisite for making or entering into this contract imposed by section 1352, title 31, United States Code. Any person who makes an expenditure prohibited under this provision, shall be subject to a civil penalty of not less than $10,000, and not more than $100,000, for each such failure.

(End of provision)

52.204-5 WOMEN-OWNED BUSINESS (OTHER THAN SMALL BUSINESS) (MAY 1999)

(a) Definition. Women-owned business concern, as used in this provision, means a concern that is at least 51 percent owned by one or more women; or in the case of any publicly owned business, at least 51 percent of its stock is owned by one or more women; and whose management and daily business operations are controlled by one or more women.

(b) Representation. [Complete only if the offeror is a women-owned business concern and has not represented itself as a small business concern in paragraph (b)(1) of FAR 52.219-1, Small Business Program Representations, of this solicitation.] The offeror represents that it ( ) is a women-owned business concern.

(End of provision)

52.204-4003 TAXPAYER IDENTIFICATION

Taxpayer Identification Number (TIN),” as used in this provision, means the number required by the Internal Revenue Service (IRS) to be used by the offeror in reporting income tax and other returns. The TIN may be either a Social Security Number or an Employer Identification Number.

(a) Taxpayer Identification Number (TIN).

___ TIN:._____

___ TIN has been applied for.

___ TIN is not required because:

___ Offeror is a nonresident alien, foreign corporation, or foreign partnership that does not have income effectively connected with the conduct of a trade or business in the United States and does not have an office or place of business or a fiscal paying agent in the United States;

___ Offeror is an agency or instrumentality of a foreign government;

___ Offeror is an agency or instrumentality of the Federal Government.

(b) Type of organization.

___ Sole proprietorship;

___ Partnership;

___ Corporate entity (not tax-exempt);

___ Corporate entity (tax-exempt);

___ Government entity (Federal, State, or local);

___ Foreign government;

___ International organization per 26 CFR 1.6049-4;

___ Other _____

(c) Common parent.

___ Offeror is not owned or controlled by a common parent

___ Name and TIN of common parent:

Name _____

TIN _____

(End of provision)

52.209-5 CERTIFICATION REGARDING DEBARMENT, SUSPENSION, PROPOSED DEBARMENT, AND OTHER RESPONSIBILITY MATTERS (DEC 2001)

(a)(1) The Offeror certifies, to the best of its knowledge and belief, that-

(i) The Offeror and/or any of its Principals-

(A) Are ( ) are not ( ) presently debarred, suspended, proposed for debarment, or declared ineligible for the award of contracts by any Federal agency;

(B) Have ( ) have not ( ), within a three-year period preceding this offer, been convicted of or had a civil judgment rendered against them for: commission of fraud or a criminal offense in connection with obtaining, attempting to obtain, or performing a public (Federal, state, or local) contract or subcontract; violation of Federal or state antitrust statutes relating to the submission of offers; or commission of embezzlement, theft, forgery, bribery, falsification or destruction of records, making false statements, tax evasion, or receiving stolen property; and

(C) Are ( ) are not ( ) presently indicted for, or otherwise criminally or civilly charged by a governmental entity with, commission of any of the offenses enumerated in paragraph (a)(1)(i)(B) of this provision.

(ii) The Offeror has ( ) has not ( ), within a three-year period preceding this offer, had one or more contracts terminated for default by any Federal agency.

(2) "Principals," for the purposes of this certification, means officers; directors; owners; partners; and, persons having primary management or supervisory responsibilities within a business entity (e.g., general manager; plant manager; head of a subsidiary, division, or business segment, and similar positions).

This Certification Concerns a Matter Within the Jurisdiction of an Agency of the United States and the Making of a False, Fictitious, or Fraudulent Certification May Render the Maker Subject to Prosecution Under Section 1001, Title 18, United States Code.

(b) The Offeror shall provide immediate written notice to the Contracting Officer if, at any time prior to contract award, the Offeror learns that its certification was erroneous when submitted or has become erroneous by reason of changed circumstances.

(c) A certification that any of the items in paragraph (a) of this provision exists will not necessarily result in withholding of an award under this solicitation. However, the certification will be considered in connection with a determination of the Offeror's responsibility. Failure of the Offeror to furnish a certification or provide such additional information as requested by the Contracting Officer may render the Offeror nonresponsible.

(d) Nothing contained in the foregoing shall be construed to require establishment of a system of records in order to render, in good faith, the certification required by paragraph (a) of this provision. The knowledge and information of an Offeror is not required to exceed that which is normally possessed by a prudent person in the ordinary course of business dealings.

(e) The certification in paragraph (a) of this provision is a material representation of fact upon which reliance was placed when making award. If it is later determined that the Offeror knowingly rendered an erroneous certification, in addition to other remedies available to the Government, the Contracting Officer may terminate the contract resulting from this solicitation for default.

(End of provision)

52.219-1 SMALL BUSINESS PROGRAM REPRESENTATIONS (APR 2002) - ALTERNATE I (APR 2002)

(a)(1) The North American Industry Classification System (NAICS) code for this acquisition is 236220.

(2) The small business size standard is $28.5.

(3) The small business size standard for a concern which submits an offer in its own name, other than on a construction or service contract, but which proposes to furnish a product which it did not itself manufacture, is 500 employees.

(b) Representations. (1) The offeror represents as part of its offer that it ( ) is, ( ) is not a small business concern.

(2) (Complete only if the offeror represented itself as a small business concern in paragraph (b)(1) of this provision.) The offeror represents, for general statistical purposes, that it ( ) is, ( ) is not a small disadvantaged business concern as defined in 13 CFR 124.1002.

(3) (Complete only if the offeror represented itself as a small business concern in paragraph (b)(1) of this provision.) The offeror represents as part of its offer that it ( ) is, ( ) is not a women-owned small business concern.

(4) (Complete only if the offeror represented itself as a small business concern in paragraph (b)(1) of this provision.) The offeror represents as part of its offer that it ( ) is, ( ) is not a veteran-owned small business concern.

(5) (Complete only if the offeror represented itself as a veteran-owned small business concern in paragraph (b)(4) of this provision.) The offeror represents as part of its offer that it ( ) is, ( ) is not a service-disabled veteran-owned small business concern.

(6) [Complete only if the offeror represented itself as a small business concern in paragraph (b)(1) of this provision.] The offeror represents, as part of its offer, that--

(i) It ( ) is, ( ) is not a HUBZone small business concern listed, on the date of this representation, on the List of Qualified HUBZone Small Business Concerns maintained by the Small Business Administration, and no material change in ownership and control, principal office, or HUBZone employee percentage has occurred since it was certified by the Small Business Administration in accordance with 13 CFR part 126; and

(ii) It ( ) is, ( ) is not a joint venture that complies with the requirements of 13 CFR part 126, and the representation in paragraph (b)(6)(i) of this provision is accurate for the HUBZone small business concern or concerns that are participating in the joint venture. (The offeror shall enter the name or names of the HUBZone small business concern or concerns that are participating in the joint venture:_____.) Each HUBZone small business concern participating in the joint venture shall submit a separate signed copy of the HUBZone representation.

(7) (Complete if offeror represented itself as disadvantaged in paragraph (b)(2) of this provision.) The offeror shall check the category in which its ownership falls:

____ Black American.

____ Hispanic American.

____ Native American (American Indians, Eskimos, Aleuts, or Native Hawaiians).

____ Asian-Pacific American (persons with origins from Burma, Thailand, Malaysia, Indonesia, Singapore, Brunei, Japan, China, Taiwan, Laos, Cambodia (Kampuchea), Vietnam, Korea, The Philippines, U.S. Trust Territory of the Pacific Islands (Republic of Palau), Republic of the Marshall Islands, Federated States of Micronesia, the Commonwealth of the Northern Mariana Islands, Guam, Samoa, Macao, Hong Kong, Fiji, Tonga, Kiribati, Tuvalu, or Nauru).

____ Subcontinent Asian (Asian-Indian) American (persons with origins from India, Pakistan, Bangladesh, Sri Lanka, Bhutan, the Maldives Islands, or Nepal).

____ Individual/concern, other than one of the preceding.

(c) Definitions. As used in this provision--

Service-disabled veteran-owned small business concern--

(1) Means a small business concern--

(i) Not less than 51 percent of which is owned by one or more service-disabled veterans or, in the case of any publicly owned business, not less than 51 percent of the stock of which is owned by one or more service-disabled veterans; and

(ii) The management and daily business operations of which are controlled by one or more service-disabled veterans or, in the case of a veteran with permanent and severe disability, the spouse or permanent caregiver of such veteran.

(2) Service-disabled veteran means a veteran, as defined in 38 U.S.C. 101(2), with a disability that is service-connected, as defined in 38 U.S.C. 101(16).

"Small business concern," means a concern, including its affiliates, that is independently owned and operated, not dominant in the field of operation in which it is bidding on Government contracts, and qualified as a small business under the criteria in 13 CFR Part 121 and the size standard in paragraph (a) of this provision.

Veteran-owned small business concern means a small business concern--

(1) Not less than 51 percent of which is owned by one or more veterans (as defined at 38 U.S.C. 101(2)) or, in the case of any publicly owned business, not less than 51 percent of the stock of which is owned by one or more veterans; and

(2) The management and daily business operations of which are controlled by one or more veterans.

"Women-owned small business concern," means a small business concern --

(1) That is at least 51 percent owned by one or more women or, in the case of any publicly owned business, at least 51 percent of the stock of which is owned by one or more women; or

(2) Whose management and daily business operations are controlled by one or more women.

(d) Notice.

(1) If this solicitation is for supplies and has been set aside, in whole or in part, for small business concerns, then the clause in this solicitation providing notice of the set-aside contains restrictions on the source of the end items to be furnished.

(2) Under 15 U.S.C. 645(d), any person who misrepresents a firm's status as a small, HUBZone small, small disadvantaged, or women-owned small business concern in order to obtain a contract to be awarded under the preference programs established pursuant to section 8(a), 8(d), 9, or 15 of the Small Business Act or any other provision of Federal law that specifically references section 8(d) for a definition of program eligibility, shall--

(i) Be punished by imposition of fine, imprisonment, or both;

(ii) Be subject to administrative remedies, including suspension and debarment; and

(iii) Be ineligible for participation in programs conducted under the authority of the Act.

(End of provision)

52.219-19 SMALL BUSINESS CONCERN REPRESENTATION FOR THE SMALL BUSINESS COMPETITIVENESS DEMONSTRATION PROGRAM (OCT 2000)

(a) Definition.

"Emerging small business" as used in this solicitation, means a small business concern whose size is no greater than 50 percent of the numerical size standard applicable to the North American Industry Classification System (NAICS) code assigned to a contracting opportunity.

(b) [Complete only if the Offeror has represented itself under the provision at 52.219-1 as a small business concern under the size standards of this solicitation.] The Offeror [ ] is, [ ] is not an emerging small business.

(c) (Complete only if the Offeror is a small business or an emerging small business, indicating its size range.)

Offeror's number of employees for the past 12 months (check this column if size standard stated in solicitation is expressed in terms of number of employees) or Offeror's average annual gross revenue for the last 3 fiscal years (check this column if size standard stated in solicitation is expressed in terms of annual receipts). (Check one of the following.)

No. of Employees	Avg. Annual Gross Revenues
____ 50 or fewer	____ $1 million or less
____ 51 - 100	____ $1,000,001 - $2 million
____ 101 - 250	____ $2,000,001 - $3.5 million
____ 251 - 500	____ $3,500,001 - $5 million
____ 501 - 750	____ $5,000,001 - $10 million
____ 751 - 1,000	____ $10,000,001 - $17 million
____ Over 1,000	____ Over $17 million

(End of provision)

52.222-22 PREVIOUS CONTRACTS AND COMPLIANCE REPORTS (FEB 1999)

The offeror represents that --

(a) ( ) It has, ( ) has not participated in a previous contract or subcontract subject to the Equal Opportunity clause of this solicitation;

(b) ( ) It has, ( ) has not, filed all required compliance reports; and

(c) Representations indicating submission of required compliance reports, signed by proposed subcontractors, will be obtained before subcontract awards.

(End of provision)

52.222-38 COMPLIANCE WITH VETERANS' EMPLOYMENT REPORTING REQUIREMENTS (DEC 2001)

By submission of its offer, the offeror represents that, if it is subject to the reporting requirements of 38 U.S.C. 4212(d) (i.e., if it has any contract containing Federal Acquisition Regulation clause 52.222-37, Employment Reports on Special Disabled Veterans, Veterans of the Vietnam Era, and Other Eligible Veterans), it has submitted the most recent VETS-100 Report required by that clause.

(End of provision)

52.223-4 RECOVERED MATERIAL CERTIFICATION (OCT 1997)

As required by the Resource Conservation and Recovery Act of 1976 (42 U.S.C. 6962(c)(3)(A)(i)), the offeror certifies, by signing this offer, that the percentage of recovered materials to be used in the performance of the contract will be at least the amount required by the applicable contract specifications.

(End of provision)

52.223-13 CERTIFICATION OF TOXIC CHEMICAL RELEASE REPORTING (AUG 2003)

(a) Executive Order 13148, of April 21, 2000, Greening the Government through Leadership in Environmental Management, requires submission of this certification as a prerequisite for contract award.

(b) By signing this offer, the offeror certifies that--

(1) As the owner or operator of facilities that will be used in the performance of this contract that are subject to the filing and reporting requirements described in section 313 of the Emergency Planning and Community Right-to-Know Act of 1986 (EPCRA) (42 U.S.C. 11023) and section 6607 of the Pollution Prevention Act of 1990 (PPA) (42 U.S.C. 13106), the offeror will file and continue to file for such facilities for the life of the contract the Toxic Chemical Release Inventory Form (Form R) as described in sections 313(a) and (g) of EPCRA and section 6607 of PPA; or

(2) None of its owned or operated facilities to be used in the performance of this contract is subject to the Form R filing and reporting requirements because each such facility is exempt for at least one of the following reasons: (Check each block that is applicable.)

( ) (i) The facility does not manufacture, process, or otherwise use any toxic chemicals listed in 40 CFR 372.65;

( ) (ii) The facility does not have 10 or more full-time employees as specified in section 313.(b)(1)(A) of EPCRA 42 U.S.C. 11023(b)(1)(A);

( ) (iii) The facility does not meet the reporting thresholds of toxic chemicals established under section 313(f) of EPCRA, 42 U.S.C. 11023(f) (including the alternate thresholds at 40 CFR 372.27, provided an appropriate certification form has been filed with EPA);

( ) (iv) The facility does not fall within the following Standard Industrial Classification (SIC) codes or their corresponding North American Industry Classification System sectors:

(A) Major group code 10 (except 1011, 1081, and 1094.

(B) Major group code 12 (except 1241).

(C) Major group codes 20 through 39.

(D) Industry code 4911, 4931, or 4939 (limited to facilities that combust coal and/or oil for the purpose of generating power for distribution in commerce).

(E) Industry code 4953 (limited to facilities regulated under the Resource Conservation and Recovery Act, Subtitle C (42 U.S.C. 6921, et seq.), 5169, 5171, or 7389 (limited to facilities primarily engaged in solvent recovery services on a contract or fee basis); or

( ) (v) The facility is not located within the United States or its outlying areas.

(End of clause)

252.209-7001 DISCLOSURE OF OWNERSHIP OR CONTROL BY THE GOVERNMENT OF A TERRORIST COUNTRY (MAR 1998)

(a) "Definitions."

As used in this provision --

(a) "Government of a terrorist country" includes the state and the government of a terrorist country, as well as any political subdivision, agency, or instrumentality thereof.

(2) "Terrorist country" means a country determined by the Secretary of State, under section 6(j)(1)(A) of the Export Administration Act of 1979 (50 U.S.C. App. 2405(j)(i)(A)), to be a country the government of which has repeatedly provided support for such acts of international terrorism. As of the date of this provision, terrorist countries include: Cuba, Iran, Iraq, Libya, North Korea, Sudan, and Syria.

(3) "Significant interest" means --

(i) Ownership of or beneficial interest in 5 percent or more of the firm's or subsidiary's securities. Beneficial interest includes holding 5 percent or more of any class of the firm's securities in "nominee shares," "street names," or some other method of holding securities that does not disclose the beneficial owner;

(ii) Holding a management position in the firm, such as a director or officer;

(iii) Ability to control or influence the election, appointment, or tenure of directors or officers in the firm;

(iv) Ownership of 10 percent or more of the assets of a firm such as equipment, buildings, real estate, or other tangible assets of the firm; or

(v) Holding 50 percent or more of the indebtness of a firm.

(b) "Prohibition on award."

In accordance with 10 U.S.C. 2327, no contract may be awarded to a firm or a subsidiary of a firm if the government of a terrorist country has a significant interest in the firm or subsidiary or, in the case of a subsidiary, the firm that owns the subsidiary, unless a waiver is granted by the Secretary of Defense.

(c) "Disclosure."

If the government of a terrorist country has a significant interest in the Offeror or a subsidiary of the Offeror, the Offeror shall disclosure such interest in an attachment to its offer. If the Offeror is a subsidiary, it shall also disclose any significant interest the government of a terrorist country has in any firm that owns or controls the subsidiary. The disclosure shall include --

(1) Identification of each government holding a significant interest; and

(2) A description of the significant interest held by each government.

(End of provision)

252.247-7022 REPRESENTATION OF EXTENT OF TRANSPORTATION BY SEA (AUG 1992)

(a) The Offeror shall indicate by checking the appropriate blank in paragraph (b) of this provision whether transportation of supplies by sea is anticipated under the resultant contract. The term supplies is defined in the Transportation of Supplies by Sea clause of this solicitation.

(b) Representation. The Offeror represents that it:

____ (1) Does anticipate that supplies will be transported by sea in the performance of any contract or subcontract resulting from this solicitation.

____ (2) Does not anticipate that supplies will be transported by sea in the performance of any contract or subcontract resulting from this solicitation.

(c) Any contract resulting from this solicitation will include the Transportation of Supplies by Sea clause. If the Offeror represents that it will not use ocean transportation, the resulting contract will also include the Defense FAR Supplement clause at 252.247-7024, Notification of Transportation of Supplies by Sea.

(End of provision)

Section 00700 - Contract Clauses

CLAUSES INCORPORATED BY FULL TEXT

52.202-1 DEFINITIONS (MAY 2001) --ALTERNATE I (MAR 2001)

(a) Agency head or head of the agency means the Secretary (Attorney General, Administrator, Governor, Chairperson, or other chief official, as appropriate) of the agency, unless otherwise indicated, including any deputy or assistant chief official of the executive agency.

(b) Commercial component means any component that is a commercial item.

(c) Component means any item supplied to the Government as part of an end item or of another component, except that for use in 52.225-9, and 52.225-11 see the definitions in 52.225-9(a) and 52.225-11(a).

(d) Contracting Officer means a person with the authority to enter into, administer, and/or terminate contracts and make related determinations and findings. The term includes certain authorized representatives of the Contracting Officer acting within the limits of their authority as delegated by the Contracting Officer.

(e) Nondevelopmental item means--

(1) Any previously developed item of supply used exclusively for governmental purposes by a Federal agency, a State or local government, or a foreign government with which the United States has a mutual defense cooperation agreement;

(2) Any item described in paragraph (f)(1) of this definition that requires only minor modification or modifications of a type customarily available in the commercial marketplace in order to meet the requirements of the procuring department or agency; or

(3) Any item of supply being produced that does not meet the requirements of paragraph (f)(1) or (f)(2) solely because the item is not yet in use.

(f) "Contracting Officer" means a person with the authority to enter into, administer, and/or terminate contracts and make related determinations and findings. The term includes certain authorized representatives of the Contracting Officer acting within the limits of their authority as delegated by the Contracting Officer.

(g) Except as otherwise provided in this contract, the term "subcontracts" includes, but is not limited to, purchase orders and changes and modifications to purchase orders under this contract.

(End of clause)

52.203-3 GRATUITIES (APR 1984)

(a) The right of the Contractor to proceed may be terminated by written notice if, after notice and hearing, the agency head or a designee determines that the Contractor, its agent, or another representative--

(1) Offered or gave a gratuity (e.g., an entertainment or gift) to an officer, official, or employee of the Government; and

(2) Intended, by the gratuity, to obtain a contract or favorable treatment under a contract.

(b) The facts supporting this determination may be reviewed by any court having lawful jurisdiction.

(c) If this contract is terminated under paragraph (a) of this clause, the Government is entitled--

(1) To pursue the same remedies as in a breach of the contract; and

(2) In addition to any other damages provided by law, to exemplary damages of not less than 3 nor more than 10 times the cost incurred by the Contractor in giving gratuities to the person concerned, as determined by the agency head or a designee. (This subparagraph (c)(2) is applicable only if this contract uses money appropriated to the Department of Defense.)

(d) The rights and remedies of the Government provided in this clause shall not be exclusive and are in addition to any other rights and remedies provided by law or under this contract.

(End of clause)

52.203-5 COVENANT AGAINST CONTINGENT FEES (APR 1984)

(a) The Contractor warrants that no person or agency has been employed or retained to solicit or obtain this contract upon an agreement or understanding for a contingent fee, except a bona fide employee or agency. For breach or violation of this warranty, the Government shall have the right to annul this contract without liability or, in its discretion, to deduct from the contract price or consideration, or otherwise recover, the full amount of the contingent fee.

(b) "Bona fide agency," as used in this clause, means an established commercial or selling agency, maintained by a contractor for the purpose of securing business, that neither exerts nor proposes to exert improper influence to solicit or obtain Government contracts nor holds itself out as being able to obtain any Government contract or contracts through improper influence.

"Bona fide employee," as used in this clause, means a person, employed by a contractor and subject to the contractor's supervision and control as to time, place, and manner of performance, who neither exerts nor proposes to exert improper influence to solicit or obtain Government contracts nor holds out as being able to obtain any Government contract or contracts through improper influence.

"Contingent fee," as used in this clause, means any commission, percentage, brokerage, or other fee that is contingent upon the success that a person or concern has in securing a Government contract.

"Improper influence," as used in this clause, means any influence that induces or tends to induce a Government employee or officer to give consideration or to act regarding a Government contract on any basis other than the merits of the matter.

(End of clause)

52.203-6 RESTRICTIONS ON SUBCONTRACTOR SALES TO THE GOVERNMENT (JUL 1995)

(a) Except as provided in (b) of this clause, the Contractor shall not enter into any agreement with an actual or prospective subcontractor, nor otherwise act in any manner, which has or may have the effect of restricting sales by such subcontractors directly to the Government of any item or process (including computer software) made or furnished by the subcontractor under this contract or under any follow-on production contract.

(b) The prohibition in (a) of this clause does not preclude the Contractor from asserting rights that are otherwise authorized by law or regulation.

(c) The Contractor agrees to incorporate the substance of this clause, including this paragraph (c), in all subcontracts under this contract which exceed $100,000.

52.203-7 ANTI-KICKBACK PROCEDURES. (JUL 1995)

(a) Definitions.

"Kickback," as used in this clause, means any money, fee, commission, credit, gift, gratuity, thing of value, or compensation of any kind which is provided, directly or indirectly, to any prime Contractor, prime Contractor employee, subcontractor, or subcontractor employee for the purpose of improperly obtaining or rewarding favorable treatment in connection with a prime contract or in connection with a subcontract relating to a prime contract.

"Person," as used in this clause, means a corporation, partnership, business association of any kind, trust, joint-stock company, or individual.

"Prime contract," as used in this clause, means a contract or contractual action entered into by the United States for the purpose of obtaining supplies, materials, equipment, or services of any kind.

"Prime Contractor," as used in this clause, means a person who has entered into a prime contract with the United States.

"Prime Contractor employee," as used in this clause, means any officer, partner, employee, or agent of a prime Contractor.

"Subcontract," as used in this clause, means a contract or contractual action entered into by a prime Contractor or subcontractor for the purpose of obtaining supplies, materials, equipment, or services of any kind under a prime contract.

"Subcontractor," as used in this clause, (1) means any person, other than the prime Contractor, who offers to furnish or furnishes any supplies, materials, equipment, or services of any kind under a prime contract or a subcontract entered into in connection with such prime contract, and (2) includes any person who offers to furnish or furnishes general supplies to the prime Contractor or a higher tier subcontractor.

"Subcontractor employee," as used in this clause, means any officer, partner, employee, or agent of a subcontractor.

(b) The Anti-Kickback Act of 1986 (41 U.S.C. 51-58) (the Act), prohibits any person from -

(1) Providing or attempting to provide or offering to provide any kickback;

(2) Soliciting, accepting, or attempting to accept any kickback; or

(3) Including, directly or indirectly, the amount of any kickback in the contract price charged by a prime Contractor to the United States or in the contract price charged by a subcontractor to a prime Contractor or higher tier subcontractor.

(c)(1) The Contractor shall have in place and follow reasonable procedures designed to prevent and detect possible violations described in paragraph (b) of this clause in its own operations and direct business relationships.

(2) When the Contractor has reasonable grounds to believe that a violation described in paragraph (b) of this clause may have occurred, the Contractor shall promptly report in writing the possible violation. Such reports shall be

made to the inspector general of the contracting agency, the head of the contracting agency if the agency does not have an inspector general, or the Department of Justice.

(3) The Contractor shall cooperate fully with any Federal agency investigating a possible violation described in paragraph (b) of this clause.

(4) The Contracting Officer may (i) offset the amount of the kickback against any monies owed by the United States under the prime contract and/or (ii) direct that the Prime Contractor withhold, from sums owed a subcontractor under the prime contract, the amount of any kickback. The Contracting Officer may order the monies withheld under subdivision (c)(4)(ii) of this clause be paid over to the Government unless the Government has already offset those monies under subdivision (c)(4)(i) of this clause. In either case, the Prime Contractor shall notify the Contracting Officer when the monies are withheld.

(5) The Contractor agrees to incorporate the substance of this clause, including this subparagraph (c)(5) but excepting subparagraph (c)(1), in all subcontracts under this contract which exceed $100,000.

52.203-8 CANCELLATION, RESCISSION, AND RECOVERY OF FUNDS FOR ILLEGAL OR IMPROPER ACTIVITY (JAN 1997)

(a) If the Government receives information that a contractor or a person has engaged in conduct constituting a violation of subsection (a), (b), (c), or (d) of Section 27 of the Office of Federal Procurement Policy Act (41 U.S.C. 423) (the Act), as amended by section 4304 of the 1996 National Defense Authorization Act for Fiscal Year 1996 (Pub. L. 104-106), the Government may--

(1) Cancel the solicitation, if the contract has not yet been awarded or issued; or

(2) Rescind the contract with respect to which--

(i) The Contractor or someone acting for the Contractor has been convicted for an offense where the conduct constitutes a violation of subsection 27(a) or (b) of the Act for the purpose of either--

(A) Exchanging the information covered by such subsections for anything of value; or

(B) Obtaining or giving anyone a competitive advantage in the award of a Federal agency procurement contract; or

(ii) The head of the contracting activity has determined, based upon a preponderance of the evidence, that the Contractor or someone acting for the Contractor has engaged in conduct constituting an offense punishable under subsections 27(e)(1) of the Act.

(b) If the Government rescinds the contract under paragraph (a) of this clause, the Government is entitled to recover, in addition to any penalty prescribed by law, the amount expended under the contract.

(c) The rights and remedies of the Government specified herein are not exclusive, and are in addition to any other rights and remedies provided by law, regulation, or under this contract.

(End of clause)

52.203-10 PRICE OR FEE ADJUSTMENT FOR ILLEGAL OR IMPROPER ACTIVITY (JAN 1997)

(a) The Government, at its election, may reduce the price of a fixed-price type contract and the total cost and fee under a cost-type contract by the amount of profit or fee determined as set forth in paragraph (b) of this clause if the head of the contracting activity or designee determines that there was a violation of subsection 27 (a), (b), or (c) of the Office of Federal Procurement Policy Act, as amended (41 U.S.C. 423), as implemented in section 3.104 of the Federal Acquisition Regulation.

(b) The price or fee reduction referred to in paragraph (a) of this clause shall be--

(1) For cost-plus-fixed-fee contracts, the amount of the fee specified in the contract at the time of award;

(2) For cost-plus-incentive-fee contracts, the target fee specified in the contract at the time of award, notwithstanding any minimum fee or "fee floor" specified in the contract;

(3) For cost-plus-award-fee contracts--

(i) The base fee established in the contract at the time of contract award;

(ii) If no base fee is specified in the contract, 30 percent of the amount of each award fee otherwise payable to the Contractor for each award fee evaluation period or at each award fee determination point.

(4) For fixed-price-incentive contracts, the Government may--

(i) Reduce the contract target price and contract target profit both by an amount equal to the initial target profit specified in the contract at the time of contract award; or

(ii) If an immediate adjustment to the contract target price and contract target profit would have a significant adverse impact on the incentive price revision relationship under the contract, or adversely affect the contract financing provisions, the Contracting Officer may defer such adjustment until establishment of the total final price of the contract. The total final price established in accordance with the incentive price revision provisions of the contract shall be reduced by an amount equal to the initial target profit specified in the contract at the time of contract award and such reduced price shall be the total final contract price.

(5) For firm-fixed-price contracts, by 10 percent of the initial contract price or a profit amount determined by the Contracting Officer from records or documents in existence prior to the date of the contract award.

(c) The Government may, at its election, reduce a prime contractor's price or fee in accordance with the procedures of paragraph (b) of this clause for violations of the Act by its subcontractors by an amount not to exceed the amount of profit or fee reflected in the subcontract at the time the subcontract was first definitively priced.

(d) In addition to the remedies in paragraphs (a) and (c) of this clause, the Government may terminate this contract for default. The rights and remedies of the Government specified herein are not exclusive, and are in addition to any other rights and remedies provided by law or under this contract.

(End of clause)

52.203-12 LIMITATION ON PAYMENTS TO INFLUENCE CERTAIN FEDERAL TRANSACTIONS (JUN 2003)

(a) Definitions.

"Agency," as used in this clause, means executive agency as defined in 2.101.

"Covered Federal action," as used in this clause, means any of the following Federal actions:

(1) The awarding of any Federal contract.

(2) The making of any Federal grant.

(3) The making of any Federal loan.

(4) The entering into of any cooperative agreement.

(5) The extension, continuation, renewal, amendment, or modification of any Federal contract, grant, loan, or cooperative agreement.

"Indian tribe" and "tribal organization," as used in this clause, have the meaning provided in section 4 of the Indian Self-Determination and Education Assistance Act (25 U.S.C. 450B) and include Alaskan Natives.

"Influencing or attempting to influence," as used in this clause, means making, with the intent to influence, any communication to or appearance before an officer or employee of any agency, a Member of Congress, an officer or employee of Congress, or an employee of a Member of Congress in connection with any covered Federal action.

"Local government," as used in this clause, means a unit of government in a State and, if chartered, established, or otherwise recognized by a State for the performance of a governmental duty, including a local public authority, a special district, an intrastate district, a council of governments, a sponsor group representative organization, and any other instrumentality of a local government.

"Officer or employee of an agency," as used in this clause, includes the following individuals who are employed by an agency:

(1) An individual who is appointed to a position in the Government under Title 5, United States Code, including a position under a temporary appointment.

(2) A member of the uniformed services, as defined in subsection 101(3),Title 37, United States Code.

(3) A special Government employee, as defined in section 202, Title 18, United States Code.

(4) An individual who is a member of a Federal advisory committee, as defined by the Federal Advisory Committee Act, Title 5, United States Code, appendix 2.

"Person," as used in this clause, means an individual, corporation, company, association, authority, firm, partnership, society, State, and local government, regardless of whether such entity is operated for profit, or not for profit. This term excludes an Indian tribe, tribal organization, or any other Indian organization with respect to expenditures specifically permitted by other Federal law.

"Reasonable compensation," as used in this clause, means, with respect to a regularly employed officer or employee of any person, compensation that is consistent with the normal compensation for such officer or employee for work that is not furnished to, not funded by, or not furnished in cooperation with the Federal Government.

"Reasonable payment," as used in this clause, means, with respect to professional and other technical services, a payment in an amount that is consistent with the amount normally paid for such services in the private sector.

"Recipient," as used in this clause, includes the Contractor and all subcontractors. This term excludes an Indian tribe, tribal organization, or any other Indian organization with respect to expenditures specifically permitted by other Federal law.

"Regularly employed," as used in this clause, means, with respect to an officer or employee of a person requesting or receiving a Federal contract, an officer or employee who is employed by such person for at least 130 working days within 1 year immediately preceding the date of the submission that initiates agency consideration of such person for receipt of such contract. An officer or employee who is employed by such person for less than 130 working days within 1 year immediately preceding the date of the submission that initiates agency consideration of such person shall be considered to be regularly employed as soon as he or she is employed by such person for 130 working days.

State, as used in this clause, means a State of the United States, the District of Columbia, or an outlying area of the United States, an agency or instrumentality of a State, and multi-State, regional, or interstate entity having governmental duties and powers.

(b) Prohibitions.

(1) Section 1352 of Title 31, United States Code, among other things, prohibits a recipient of a Federal contract, grant, loan, or cooperative agreement from using appropriated funds to pay any person for influencing or attempting to influence an officer or employee of any agency, a Member of Congress, an officer or employee of Congress, or an employee of a Member of Congress in connection with any of the following covered Federal actions: the awarding of any Federal contract; the making of any Federal grant; the making of any Federal loan; the entering into of any cooperative agreement; or the modification of any Federal contract, grant, loan, or cooperative agreement.

(2) The Act also requires Contractors to furnish a disclosure if any funds other than Federal appropriated funds (including profit or fee received under a covered Federal transaction) have been paid, or will be paid, to any person for influencing or attempting to influence an officer or employee of any agency, a Member of Congress, an officer or employee of Congress, or an employee of a Member of Congress in connection with a Federal contract, grant, loan, or cooperative agreement.

(3) The prohibitions of the Act do not apply under the following conditions:

(i) Agency and legislative liaison by own employees.

(A) The prohibition on the use of appropriated funds, in subparagraph (b)(1) of this clause, does not apply in the case of a payment of reasonable compensation made to an officer or employee of a person requesting or receiving a covered Federal action if the payment is for agency and legislative liaison activities not directly related to a covered Federal action.

(B) For purposes of subdivision (b)(3)(i)(A) of this clause, providing any information specifically requested by an agency or Congress is permitted at any time.

(C) The following agency and legislative liaison activities are permitted at any time where they are not related to a specific solicitation for any covered Federal action:

(1) Discussing with an agency the qualities and characteristics (including individual demonstrations) of the person's products or services, conditions or terms of sale, and service capabilities.

(2) Technical discussions and other activities regarding the application or adaptation of the person's products or services for an agency's use.

(D) The following agency and legislative liaison activities are permitted where they are prior to formal solicitation of any covered Federal action--

(1) Providing any information not specifically requested but necessary for an agency to make an informed decision about initiation of a covered Federal action;

(2) Technical discussions regarding the preparation of an unsolicited proposal prior to its official submission; and

(3) Capability presentations by persons seeking awards from an agency pursuant to the provisions of the Small Business Act, as amended by Pub. L. 95-507, and subsequent amendments.

(E) Only those services expressly authorized by subdivision (b)(3)(i)(A) of this clause are permitted under this clause.

(ii) Professional and technical services.

(A) The prohibition on the use of appropriated funds, in subparagraph (b)(1) of this clause, does not apply in the case of--

(1) A payment of reasonable compensation made to an officer or employee of a person requesting or receiving a covered Federal action or an extension, continuation, renewal, amendment, or modification of a covered Federal action, if payment is for professional or technical services rendered directly in the preparation, submission, or negotiation of any bid, proposal, or application for that Federal action or for meeting requirements imposed by or pursuant to law as a condition for receiving that Federal action.

(2) Any reasonable payment to a person, other than an officer or employee of a person requesting or receiving a covered Federal action or an extension, continuation, renewal, amendment, or modification of a covered Federal action if the payment is for professional or technical services rendered directly in the preparation, submission, or negotiation of any bid, proposal, or application for that Federal action or for meeting requirements imposed by or pursuant to law as a condition for receiving that Federal action. Persons other than officers or employees of a person requesting or receiving a covered Federal action include consultants and trade associations.

(B) For purposes of subdivision (b)(3)(ii)(A) of this clause, "professional and technical services" shall be limited to advice and analysis directly applying any professional or technical discipline. For example, drafting of a legal document accompanying a bid or proposal by a lawyer is allowable. Similarly, technical advice provided by an engineer on the performance or operational capability of a piece of equipment rendered directly in the negotiation of a contract is allowable. However, communications with the intent to influence made by a professional (such as a licensed lawyer) or a technical person (such as a licensed accountant) are not allowable under this section unless they provide advice and analysis directly applying their professional or technical expertise and unless the advice or analysis is rendered directly and solely in the preparation, submission or negotiation of a covered Federal action. Thus, for example, communications with the intent to influence made by a lawyer that do not provide legal advice or analysis directly and solely related to the legal aspects of his or her client's proposal, but generally advocate one proposal over another are not allowable under this section because the lawyer is not providing professional legal services. Similarly, communications with the intent to influence made by an engineer providing an engineering analysis prior to the preparation or submission of a bid or proposal are not allowable under this section since the engineer is providing technical services but not directly in the preparation, submission or negotiation of a covered Federal action.

(C) Requirements imposed by or pursuant to law as a condition for receiving a covered Federal award include those required by law or regulation and any other requirements in the actual award documents.

(D) Only those services expressly authorized by subdivisions (b)(3)(ii)(A)(1) and (2) of this clause are permitted under this clause.

(E) The reporting requirements of FAR 3.803(a) shall not apply with respect to payments of reasonable compensation made to regularly employed officers or employees of a person.

(c) Disclosure.

(1) The Contractor who requests or receives from an agency a Federal contract shall file with that agency a disclosure form, OMB standard form LLL, Disclosure of Lobbying Activities, if such person has made or has agreed to make any payment using nonappropriated funds (to include profits from any covered Federal action), which would be prohibited under subparagraph (b)(1) of this clause, if paid for with appropriated funds.

(2) The Contractor shall file a disclosure form at the end of each calendar quarter in which there occurs any event that materially affects the accuracy of the information contained in any disclosure form previously filed by such person under subparagraph (c)(1) of this clause. An event that materially affects the accuracy of the information reported includes--

(i) A cumulative increase of $25,000 or more in the amount paid or expected to be paid for influencing or attempting to influence a covered Federal action; or

(ii) A change in the person(s) or individual(s) influencing or attempting to influence a covered Federal action; or

(iii) A change in the officer(s), employee(s), or Member(s) contacted to influence or attempt to influence a covered Federal action.

(3) The Contractor shall require the submittal of a certification, and if required, a disclosure form by any person who requests or receives any subcontract exceeding $100,000 under the Federal contract.

(4) All subcontractor disclosure forms (but not certifications) shall be forwarded from tier to tier until received by the prime Contractor. The prime Contractor shall submit all disclosures to the Contracting Officer at the end of the calendar quarter in which the disclosure form is submitted by the subcontractor. Each subcontractor certification shall be retained in the subcontract file of the awarding Contractor.

(d) Agreement. The Contractor agrees not to make any payment prohibited by this clause.

(e) Penalties.

(1) Any person who makes an expenditure prohibited under paragraph (a) of this clause or who fails to file or amend the disclosure form to be filed or amended by paragraph (b) of this clause shall be subject to civil penalties as provided for by 31 U.S.C. 1352. An imposition of a civil penalty does not prevent the Government from seeking any other remedy that may be applicable.

(2) Contractors may rely without liability on the representation made by their subcontractors in the certification and disclosure form.

(f) Cost allowability. Nothing in this clause makes allowable or reasonable any costs which would otherwise be unallowable or unreasonable. Conversely, costs made specifically unallowable by the requirements in this clause will not be made allowable under any other provision.

(End of clause)

52.204-2 SECURITY REQUIREMENTS (AUG 1996) - ALTERNATE II (APR 1984)

(a) This clause applies to the extent that this contract involves access to information classified "Confidential," "Secret," or "Top Secret."

(b) The Contractor shall comply with (1) the Security Agreement (DD Form 441), including the National Industrial Security Program Operating Manual (DOD 5220.22-M); and (2) any revisions to that manual, notice of which has been furnished to the Contractor.

(c) If, subsequent to the date of this contract, the security classification or security requirements under this contract are changed by the Government and if the changes cause an increase or decrease in security costs or otherwise affect any other term or condition of this contract, the contract shall be subject to an equitable adjustment as if the changes were directed under the Changes clause of this contract.

(d) The Contractor agrees to insert terms that conform substantially to the language of this clause, including this paragraph (d) but excluding any reference to the Changes clause of this contract, in all subcontracts under this contract that involve access to classified information.

(e) The Contractor shall be responsible for furnishing to each employee and for requiring each employee engaged on the work to display such identification as may be approved and directed by the Contracting Officer. All prescribed identification shall immediately be delivered to the Contracting Officer, for cancellation upon the release of any employee. When required by the Contracting Officer, the Contractor shall obtain and submit fingerprints of all persons employed or to be employed on the project.

52.204-4 PRINTED OR COPIED DOUBLE-SIDED ON RECYCLED PAPER (AUG 2000)

(a) Definitions. As used in this clause--

“Postconsumer material” means a material or finished product that has served its intended use and has been discarded for disposal or recovery, having completed its life as a consumer item. Postconsumer material is a part of the broader category of “recovered material.” For paper and paper products, postconsumer material means “postconsumer fiber” defined by the U.S. Environmental Protection Agency (EPA) as--

(1) Paper, paperboard, and fibrous materials from retail stores, office buildings, homes, and so forth, after they have passed through their end-usage as a consumer item, including: used corrugated boxes; old newspapers; old magazines; mixed waste paper; tabulating cards; and used cordage; or

(2) All paper, paperboard, and fibrous materials that enter and are collected from municipal solid waste; but not

(3) Fiber derived from printers' over-runs, converters' scrap, and over-issue publications.

“Printed or copied double-sided” means printing or reproducing a document so that information is on both sides of a sheet of paper.

“Recovered material,” for paper and paper products, is defined by EPA in its Comprehensive Procurement Guideline as “recovered fiber” and means the following materials:

(1) Postconsumer fiber; and

(2) Manufacturing wastes such as--

(i) Dry paper and paperboard waste generated after completion of the papermaking process (that is, those manufacturing operations up to and including the cutting and trimming of the paper machine reel into smaller rolls or rough sheets) including: envelope cuttings, bindery trimmings, and other paper and paperboard waste resulting from printing, cutting, forming, and other converting operations; bag, box, and carton manufacturing wastes; and butt rolls, mill wrappers, and rejected unused stock; and

(ii) Repulped finished paper and paperboard from obsolete inventories of paper and paperboard manufacturers, merchants, wholesalers, dealers, printers, converters, or others.

(b) In accordance with Section 101 of Executive Order 13101 of September 14, 1998, Greening the Government through Waste Prevention, Recycling, and Federal Acquisition, the Contractor is encouraged to submit paper documents, such as offers, letters, or reports, that are printed or copied double-sided on recycled paper that meet minimum content standards specified in Section 505 of Executive Order 13101, when not using electronic commerce methods to submit information or data to the Government.

(c) If the Contractor cannot purchase high-speed copier paper, offset paper, forms bond, computer printout paper, carbonless paper, file folders, white wove envelopes, writing and office paper, book paper, cotton fiber paper, and cover stock meeting the 30 percent postconsumer material standard for use in submitting paper documents to the Government, it should use paper containing no less than 20 percent postconsumer material. This lesser standard should be used only when paper meeting the 30 percent postconsumer material standard is not obtainable at a reasonable price or does not meet reasonable performance standards.

(End of clause)

52.204-7 CENTRAL CONTRACTOR REGISTRATION (OCT 2003)

(a) Definitions. As used in this clause--

Central Contractor Registration (CCR) database means the primary Government repository for Contractor information required for the conduct of business with the Government.

Data Universal Numbering System (DUNS) number means the 9-digit number assigned by Dun and Bradstreet, Inc. (D&B) to identify unique business entities.

Data Universal Numbering System +4 (DUNS+4) number means the DUNS number assigned by D&B plus a 4-character suffix that may be assigned by a business concern. (D&B has no affiliation with this 4-character suffix.) This 4-character suffix may be assigned at the discretion of the business concern to establish additional CCR records for identifying alternative Electronic Funds Transfer (EFT) accounts (see the FAR at Subpart 32.11) for the same parent concern.

Registered in the CCR database means that--

(1) The Contractor has entered all mandatory information, including the DUNS number or the DUNS+4 number, into the CCR database; and

(2) The Government has validated all mandatory data fields and has marked the record “Active”.

(b)(1) By submission of an offer, the offeror acknowledges the requirement that a prospective awardee shall be registered in the CCR database prior to award, during performance, and through final payment of any contract, basic agreement, basic ordering agreement, or blanket purchasing agreement resulting from this solicitation.

(2) The offeror shall enter, in the block with its name and address on the cover page of its offer, the annotation “DUNS” or “DUNS +4” followed by the DUNS or DUNS +4 number that identifies the offeror's name and address exactly as stated in the offer. The DUNS number will be used by the Contracting Officer to verify that the offeror is registered in the CCR database.

(c) If the offeror does not have a DUNS number, it should contact Dun and Bradstreet directly to obtain one.

(1) An offeror may obtain a DUNS number--

(i) If located within the United States, by calling Dun and Bradstreet at 1-866-705-5711 or via the Internet at http://www.dnb.com; or

(ii) If located outside the United States, by contacting the local Dun and Bradstreet office.

(2) The offeror should be prepared to provide the following information:

(i) Company legal business.

(ii) Tradestyle, doing business, or other name by which your entity is commonly recognized.

(iii) Company Physical Street Address, City, State, and Zip Code.

(iv) Company Mailing Address, City, State and Zip Code (if separate from physical).

(v) Company Telephone Number.

(vi) Date the company was started.

(vii) Number of employees at your location.

(viii) Chief executive officer/key manager.

(ix) Line of business (industry).

(x) Company Headquarters name and address (reporting relationship within your entity).

(d) If the Offeror does not become registered in the CCR database in the time prescribed by the Contracting Officer, the Contracting Officer will proceed to award to the next otherwise successful registered Offeror.

(e) Processing time, which normally takes 48 hours, should be taken into consideration when registering. Offerors who are not registered should consider applying for registration immediately upon receipt of this solicitation.

(f) The Contractor is responsible for the accuracy and completeness of the data within the CCR database, and for any liability resulting from the Government's reliance on inaccurate or incomplete data. To remain registered in the CCR database after the initial registration, the Contractor is required to review and update on an annual basis from the date of initial registration or subsequent updates its information in the CCR database to ensure it is current, accurate and complete. Updating information in the CCR does not alter the terms and conditions of this contract and is not a substitute for a properly executed contractual document.

(g)(1)(i) If a Contractor has legally changed its business name, “doing business as” name, or division name (whichever is shown on the contract), or has transferred the assets used in performing the contract, but has not completed the necessary requirements regarding novation and change-of-name agreements in Subpart 42.12, the Contractor shall provide the responsible Contracting Officer a minimum of one business day's written notification of its intention to (A) change the name in the CCR database; (B) comply with the requirements of Subpart 42.12 of the FAR; and (C) agree in writing to the timeline and procedures specified by the responsible Contracting Officer. The Contractor must provide with the notification sufficient documentation to support the legally changed name.

(ii) If the Contractor fails to comply with the requirements of paragraph (g)(1)(i) of this clause, or fails to perform the agreement at paragraph (g)(1)(i)(C) of this clause, and, in the absence of a properly executed novation or change-of-name agreement, the CCR information that shows the Contractor to be other than the Contractor indicated in the contract will be considered to be incorrect information within the meaning of the “Suspension of Payment” paragraph of the electronic funds transfer (EFT) clause of this contract.

(2) The Contractor shall not change the name or address for EFT payments or manual payments, as appropriate, in the CCR record to reflect an assignee for the purpose of assignment of claims (see FAR Subpart 32.8, Assignment of Claims). Assignees shall be separately registered in the CCR database. Information provided to the Contractor's CCR record that indicates payments, including those made by EFT, to an ultimate recipient other than that Contractor will be considered to be incorrect information within the meaning of the “Suspension of payment” paragraph of the EFT clause of this contract.

(h) Offerors and Contractors may obtain information on registration and annual confirmation requirements via the internet at http://www.ccr.gov or by calling 1-888-227-2423, or 269-961-5757.

(End of clause)

52.209-6 PROTECTING THE GOVERNMENT'S INTEREST WHEN SUBCONTRACTING WITH CONTRACTORS DEBARRED, SUSPENDED, OR PROPOSED FOR DEBARMENT (JUL 1995)

(a) The Government suspends or debars Contractors to protect the Government's interests. The Contractor shall not enter into any subcontract in excess of the $25,000 with a Contractor that is debarred, suspended, or proposed for debarment unless there is a compelling reason to do so.

(b) The Contractor shall require each proposed first-tier subcontractor, whose subcontract will exceed $25,000, to disclose to the Contractor, in writing, whether as of the time of award of the subcontract, the subcontractor, or its principles, is or is not debarred, suspended, or proposed for debarment by the Federal Government.

(c) A corporate officer or a designee of the Contractor shall notify the Contracting Officer, in writing, before entering into a subcontract with a party that is debarred, suspended, or proposed for debarment (see FAR 9.404 for information on the List of Parties Excluded from Federal Procurement and Nonprocurement Programs). The notice must include the following:

(1) The name of the subcontractor.

(2) The Contractor's knowledge of the reasons for the subcontractor being on the List of Parties Excluded from Federal Procurement and Nonprocurement Programs.

(3) The compelling reason(s) for doing business with the subcontractor notwithstanding its inclusion on the List of Parties Excluded from Federal Procurement and Nonprocurement Programs.

(4) The systems and procedures the Contractor has established to ensure that it is fully protecting the Government's interests when dealing with such subcontractor in view of the specific basis for the party's debarment, suspension, or proposed debarment.

(End of clause)

52.211-15 DEFENSE PRIORITY AND ALLOCATION REQUIREMENTS (SEP 1990)

This is a rated order certified for national defense use, and the Contractor shall follow all the requirements of the Defense Priorities and Allocations System regulation (15 CFR 700).

(End of clause)

52.215-2 AUDIT AND RECORDS--NEGOTIATION (JUN 1999)

(a) As used in this clause, "records" includes books, documents, accounting procedures and practices, and other data, regardless of type and regardless of whether such items are in written form, in the form of computer data, or in any other form.

(b) Examination of costs. If this is a cost-reimbursement, incentive, time-and-materials, labor-hour, or price redeterminable contract, or any combination of these, the Contractor shall maintain and the Contracting Officer, or an authorized representative of the Contracting Officer, shall have the right to examine and audit all records and other evidence sufficient to reflect properly all costs claimed to have been incurred or anticipated to be incurred directly or indirectly in performance of this contract. This right of examination shall include inspection at all reasonable times of the Contractor's plants, or parts of them, engaged in performing the contract.

(c) Cost or pricing data. If the Contractor has been required to submit cost or pricing data in connection with any pricing action relating to this contract, the Contracting Officer, or an authorized representative of the Contracting Officer, in order to evaluate the accuracy, completeness, and currency of the cost or pricing data, shall have the right to examine and audit all of the Contractor's records, including computations and projections, related to--

(1) The proposal for the contract, subcontract, or modification;

(2) The discussions conducted on the proposal(s), including those related to negotiating;

(3) Pricing of the contract, subcontract, or modification; or

(4) Performance of the contract, subcontract or modification.

(d) Comptroller General--(1) The Comptroller General of the United States, or an authorized representative, shall have access to and the right to examine any of the Contractor's directly pertinent records involving transactions related to this contract or a subcontract hereunder.

(2) This paragraph may not be construed to require the Contractor or subcontractor to create or maintain any record that the Contractor or subcontractor does not maintain in the ordinary course of business or pursuant to a provision of law.

(e) Reports. If the Contractor is required to furnish cost, funding, or performance reports, the Contracting Officer or an authorized representative of the Contracting Officer shall have the right to examine and audit the supporting records and materials, for the purpose of evaluating (1) the effectiveness of the Contractor's policies and procedures to produce data compatible with the objectives of these reports and (2) the data reported.

(f) Availability. The Contractor shall make available at its office at all reasonable times the records, materials, and other evidence described in paragraphs (a), (b), (c), (d), and (e) of this clause, for examination, audit, or reproduction, until 3 years after final payment under this contract or for any shorter period specified in Subpart 4.7, Contractor Records Retention, of the Federal Acquisition Regulation (FAR), or for any longer period required by statute or by other clauses of this contract. In addition--

(1) If this contract is completely or partially terminated, the Contractor shall make available the records relating to the work terminated until 3 years after any resulting final termination settlement; and

(2) The Contractor shall make available records relating to appeals under the Disputes clause or to litigation or the settlement of claims arising under or relating to this contract until such appeals, litigation, or claims are finally resolved.

(g) The Contractor shall insert a clause containing all the terms of this clause, including this paragraph (g), in all subcontracts under this contract that exceed the simplified acquisition threshold, and--

(1) That are cost-reimbursement, incentive, time-and-materials, labor-hour, or price-redeterminable type or any combination of these;

(2) For which cost or pricing data are required; or

(3) That require the subcontractor to furnish reports as discussed in paragraph (e) of this clause.

The clause may be altered only as necessary to identify properly the contracting parties and the Contracting Officer under the Government prime contract.

(End of clause)

52.215-11 PRICE REDUCTION FOR DEFECTIVE COST OR PRICING DATA--MODIFICATIONS (OCT 1997)

(a) This clause shall become operative only for any modification to this contract involving a pricing adjustment expected to exceed the threshold for submission of cost or pricing data at FAR 15.403-4, except that this clause does not apply to any modification if an exception under FAR 15.403-1 applies.

(b) If any price, including profit or fee, negotiated in connection with any modification under this clause, or any cost reimbursable under this contract, was increased by any significant amount because (1) the Contractor or a subcontractor furnished cost or pricing data that were not complete, accurate, and current as certified in its Certificate of Current Cost or Pricing Data, (2) a subcontractor or prospective subcontractor furnished the Contractor cost or pricing data that were not complete, accurate, and current as certified in the Contractor's Certificate of Current Cost or Pricing Data, or (3) any of these parties furnished data of any description that were not accurate, the price or cost shall be reduced accordingly and the contract shall be modified to reflect the reduction. This right to a price reduction is limited to that resulting from defects in data relating to modifications for which this clause becomes operative under paragraph (a) of this clause.

(c) Any reduction in the contract price under paragraph (b) of this clause due to defective data from a prospective subcontractor that was not subsequently awarded the subcontract shall be limited to the amount, plus applicable overhead and profit markup, by which--

(1) The actual subcontract; or

(2) The actual cost to the Contractor, if there was no subcontract, was less than the prospective subcontract cost estimate submitted by the Contractor; provided, that the actual subcontract price was not itself affected by defective cost or pricing data.

(d)(1) If the Contracting Officer determines under paragraph (b) of this clause that a price or cost reduction should be made, the Contractor agrees not to raise the following matters as a defense:

(i) The Contractor or subcontractor was a sole source supplier or otherwise was in a superior bargaining position and thus the price of the contract would not have been modified even if accurate, complete, and current cost or pricing data had been submitted.

(ii) The Contracting Officer should have known that the cost or pricing data in issue were defective even though the Contractor or subcontractor took no affirmative action to bring the character of the data to the attention of the Contracting Officer.

(iii) The contract was based on an agreement about the total cost of the contract and there was no agreement about the cost of each item procured under the contract.

(iv) The Contractor or subcontractor did not submit a Certificate of Current Cost or Pricing Data.

(2)(i) Except as prohibited by subdivision (d)(2)(ii) of this clause, an offset in an amount determined appropriate by the Contracting Officer based upon the facts shall be allowed against the amount of a contract price reduction if--

(A) The Contractor certifies to the Contracting Officer that, to the best of the Contractor's knowledge and belief, the Contractor is entitled to the offset in the amount requested; and

(B) The Contractor proves that the cost or pricing data were available before the “as of” date specified on its Certificate of Current Cost or Pricing Data, and that the data were not submitted before such date.

(ii) An offset shall not be allowed if--

(A) The understated data were known by the Contractor to be understated before the “as of” date specified on its Certificate of Current Cost or Pricing Data; or

(B) The Government proves that the facts demonstrate that the contract price would not have increased in the amount to be offset even if the available data had been submitted before the “as of” date specified on its Certificate of Current Cost or Pricing Data.

(e) If any reduction in the contract price under this clause reduces the price of items for which payment was made prior to the date of the modification reflecting the price reduction, the Contractor shall be liable to and shall pay the United States at the time such overpayment is repaid--

(1) Simple interest on the amount of such overpayment to be computed from the date(s) of overpayment to the Contractor to the date the Government is repaid by the Contractor at the applicable underpayment rate effective for each quarter prescribed by the Secretary of the Treasury under 26 U.S.C. 6621(a)(2); and

A penalty equal to the amount of the overpayment, if the Contractor or subcontractor knowingly submitted cost or pricing data that were incomplete, inaccurate, or noncurrent.

(End of clause)

52.215-13 SUBCONTRACTOR COST OR PRICING DATA--MODIFICATIONS (OCT 1997)

(a) The requirements of paragraphs (b) and (c) of this clause shall--

(1) Become operative only for any modification to this contract involving a pricing adjustment expected to exceed the threshold for submission of cost or pricing data at FAR 15.403-4; and

(2) Be limited to such modifications.

(b) Before awarding any subcontract expected to exceed the threshold for submission of cost or pricing data at FAR 15.403-4, on the date of agreement on price or the date of award, whichever is later; or before pricing any subcontract modification involving a pricing adjustment expected to exceed the threshold for submission of cost or pricing data at FAR 15.403-4, the Contractor shall require the subcontractor to submit cost or pricing data (actually or by specific identification in writing), unless an exception under FAR 15.403-1 applies.

(c) The Contractor shall require the subcontractor to certify in substantially the form prescribed in FAR 15.406-2 that, to the best of its knowledge and belief, the data submitted under paragraph (b) of this clause were accurate, complete, and current as of the date of agreement on the negotiated price of the subcontract or subcontract

modification.

The Contractor shall insert the substance of this clause, including this paragraph (d), in each subcontract that exceeds the threshold for submission of cost or pricing data at FAR 15.403-4 on the date of agreement on price or the date of award, whichever is later.

(End of clause)

52.215-21 REQUIREMENTS FOR COST OR PRICING DATA OR INFORMATION OTHER THAN COST OR PRICING DATA--MODIFICATIONS (OCT 1997)

(a) Exceptions from cost or pricing data. (1) In lieu of submitting cost or pricing data for modifications under this contract, for price adjustments expected to exceed the threshold set forth at FAR 15.403-4 on the date of the agreement on price or the date of the award, whichever is later, the Contractor may submit a written request for exception by submitting the information described in the following subparagraphs. The Contracting Officer may require additional supporting information, but only to the extent necessary to determine whether an exception should be granted, and whether the price is fair and reasonable--

(i) Identification of the law or regulation establishing the price offered. If the price is controlled under law by periodic rulings, reviews, or similar actions of a governmental body, attach a copy of the controlling document, unless it was previously submitted to the contracting office.

(ii) Information on modifications of contracts or subcontracts for commercial items. (A) If--

(1) The original contract or subcontract was granted an exception from cost or pricing data requirements because the price agreed upon was based on adequate price competition or prices set by law or regulation, or was a contract or subcontract for the acquisition of a commercial item; and

(2) The modification (to the contract or subcontract) is not exempted based on one of these exceptions, then the Contractor may provide information to establish that the modification would not change the contract or subcontract from a contract or subcontract for the acquisition of a commercial item to a contract or subcontract for the acquisition of an item other than a commercial item.

(B) For a commercial item exception, the Contractor shall provide, at a minimum, information on prices at which the same item or similar items have previously been sold that is adequate for evaluating the reasonableness of the price of the modification. Such information may include--

(1) For catalog items, a copy of or identification of the catalog and its date, or the appropriate pages for the offered items, or a statement that the catalog is on file in the buying office to which the proposal is being submitted. Provide a copy or describe current discount policies and price lists (published or unpublished), e.g., wholesale, original equipment manufacturer, or reseller. Also explain the basis of each offered price and its relationship to the established catalog price, including how the proposed price relates to the price of recent sales in quantities similar to the proposed quantities.

(2) For market-priced items, the source and date or period of the market quotation or other basis for market price, the base amount, and applicable discounts. In addition, describe the nature of the market.

(3) For items included on an active Federal Supply Service Multiple Award Schedule contract, proof that an exception has been granted for the schedule item.

(2) The Contractor grants the Contracting Officer or an authorized representative the right to examine, at any time before award, books, records, documents, or other directly pertinent records to verify any request for an exception

under this clause, and the reasonableness of price. For items priced using catalog or market prices, or law or regulation , access does not extend to cost or profit information or other data relevant solely to the Contractor's determination of the prices to be offered in the catalog or marketplace.

(b) Requirements for cost or pricing data. If the Contractor is not granted an exception from the requirement to submit cost or pricing data, the following applies:

(1) The Contractor shall submit cost or pricing data and supporting attachments in accordance with Table 15-2 of FAR 15.408.

As soon as practicable after agreement on price, but before award (except for unpriced actions), the Contractor shall submit a Certificate of Current Cost or Pricing Data, as prescribed by FAR 15.406-2.

(End of clause)

52.217-7 OPTION FOR INCREASED QUANTITY--SEPARATELY PRICED LINE ITEM (MAR 1989)

The Government may require the delivery of the numbered line item, identified in the Schedule as an option item, in the quantity and at the price stated in the Schedule. The Contracting Officer may exercise the option by written notice to the Contractor within 90calendar days of award of contract. Delivery of added items shall continue at the same rate that like items are called for under the contract, unless the parties otherwise agree.

(End of clause)

52.219-6 NOTICE OF TOTAL SMALL BUSINESS SET-ASIDE (JUN 2003)

(a) Definition.

"Small business concern," as used in this clause, means a concern, including its affiliates, that is independently owned and operated, not dominant in the field of operation in which it is bidding on Government contracts, and qualified as a small business under the size standards in this solicitation.

(b) General. (1) Offers are solicited only from small business concerns. Offers received from concerns that are not small business concerns shall be considered nonresponsive and will be rejected.

(2) Any award resulting from this solicitation will be made to a small business concern.

(c) Agreement. A small business concern submitting an offer in its own name shall furnish, in performing the contract, only end items manufactured or produced by small business concerns in the United States or its outlying areas. If this procurement is processed under simplified **acquisition** procedures and the total amount of this contract does not exceed $25,000, a small business concern may furnish the product of any domestic firm. This paragraph does not apply to construction or service contracts.

(End of clause)

52.219-14 LIMITATIONS ON SUBCONTRACTING (DEC 1996)

(a) This clause does not apply to the unrestricted portion of a partial set-aside.

(b) By submission of an offer and execution of a contract, the Offeror/Contractor agrees that in performance of the contract in the case of a contract for--

(1) Services (except construction). At least 50 percent of the cost of contract performance incurred for personnel shall be expended for employees of the concern.

(2) Supplies (other than procurement from a nonmanufacturer of such supplies). The concern shall perform work for at least 50 percent of the cost of manufacturing the supplies, not including the cost of materials.

(3) General construction. The concern will perform at least 15 percent of the cost of the contract, not including the cost of materials, with its own employees.

(4) Construction by special trade contractors. The concern will perform at least 25 percent of the cost of the contract, not including the cost of materials, with its own employees.

52.222-3 CONVICT LABOR (JUN 2003)

(a) Except as provided in paragraph (b) of this clause, the Contractor shall not employ in the performance of this contract any person undergoing a sentence of imprisonment imposed by any court of a State, the District of Columbia, Puerto Rico, the Northern Mariana Islands, American Samoa, Guam, or the U.S. Virgin Islands.

(b) The Contractor is not prohibited from employing persons--

(1) On parole or probation to work at paid employment during the term of their sentence;

(2) Who have been pardoned or who have served their terms; or

(3) Confined for violation of the laws of any of the States, the District of Columbia, Puerto Rico, the Northern Mariana Islands, American Samoa, Guam, or the U.S. Virgin Islands who are authorized to work at paid employment in the community under the laws of such jurisdiction, if--

(i) The worker is paid or is in an approved work training program on a voluntary basis;

(ii) Representatives of local union central bodies or similar labor union organizations have been consulted;

(iii) Such paid employment will not result in the displacement of employed workers, or be applied in skills, crafts, or trades in which there is a surplus of available gainful labor in the locality, or impair existing contracts for services;

(iv) The rates of pay and other conditions of employment will not be less than those paid or provided for work of a similar nature in the locality in which the work is being performed; and

(v) The Attorney General of the United States has certified that the work-release laws or **regulations** of the jurisdiction involved are in conformity with the requirements of Executive Order 11755, as amended by Executive Orders 12608 and 12943.

(End of clause)

52.222-4 CONTRACT WORK HOURS AND SAFETY STANDARDS ACT - OVERTIME COMPENSATION. (SEP 2000)

(a) Overtime requirements. No Contractor or subcontractor employing laborers or mechanics (see Federal Acquisition Regulation 22.300) shall require or permit them to work over 40 hours in any workweek unless they are paid at least 1 and 1/2 times the basic rate of pay for each hour worked over 40 hours.

(b) Violation; liability for unpaid wages; liquidated damages. The responsible Contractor and subcontractor are liable for unpaid wages if they violate the terms in paragraph (a) of this clause. In addition, the Contractor and subcontractor are liable for liquidated damages payable to the Government. The Contracting Officer will assess liquidated damages at the rate of $10 per affected employee for each calendar day on which the employer required or permitted the employee to work in excess of the standard workweek of 40 hours without paying overtime wages required by the Contract Work Hours and Safety Standards Act.

(c) Withholding for unpaid wages and liquidated damages. The Contracting Officer will withhold from payments due under the contract sufficient funds required to satisfy any Contractor or subcontractor liabilities for unpaid wages and liquidated damages. If amounts withheld under the contract are insufficient to satisfy Contractor or subcontractor liabilities, the Contracting Officer will withhold payments from other Federal or Federally assisted contracts held by the same Contractor that are subject to the Contract Work Hours and Safety Standards Act.

(d) Payrolls and basic records.

(1) The Contractor and its subcontractors shall maintain payrolls and basic payroll records for all laborers and mechanics working on the contract during the contract and shall make them available to the Government until 3 years after contract completion. The records shall contain the name and address of each employee, social security number, labor classifications, hourly rates of wages paid, daily and weekly number of hours worked, deductions made, and actual wages paid. The records need not duplicate those required for construction work by Department of Labor regulations at 29 CFR 5.5(a)(3) implementing the Davis-Bacon Act.

(2) The Contractor and its subcontractors shall allow authorized representatives of the Contracting Officer or the Department of Labor to inspect, copy, or transcribe records maintained under paragraph (d)(1) of this clause. The Contractor or subcontractor also shall allow authorized representatives of the Contracting Officer or Department of Labor to interview employees in the workplace during working hours.

(e) Subcontracts. The Contractor shall insert the provisions set forth in paragraphs (a) through (d) of this clause in subcontracts exceeding $100,000 and require subcontractors to include these provisions in any lower tier subcontracts. The Contractor shall be responsible for compliance by any subcontractor or lower-tier subcontractor with the provisions set forth in paragraphs (a) through (d) of this clause.

(End of clause)

52.222-6 DAVIS-BACON ACT (FEB 1995)

(a) All laborers and mechanics employed or working upon the site of the work will be paid unconditionally and not less often than once a week, and without subsequent deduction or rebate on any account (except such payroll deductions as are permitted by regulations issued by the Secretary of Labor under the Copeland Act (29 CFR Part 3), the full amount of wages and bona fide fringe benefits (or cash equivalents thereof) due at time of payment computed at rates not less than those contained in the wage determination of the Secretary of Labor which is attached hereto and made a part hereof, regardless of any contractual relationship which may be alleged to exist between the Contractor and such laborers and mechanics. Contributions made or costs reasonably anticipated for bona fide fringe benefits under section 1(b)(2) of the Davis-Bacon Act on behalf of laborers or mechanics are considered wages paid to such laborers or mechanics, subject to the provisions of paragraph (d) of this clause; also, regular contributions made or costs incurred for more than a weekly period (but not less often than quarterly) under plans, funds, or programs which cover the particular weekly period, are deemed to be constructively made or

incurred during such period. Such laborers and mechanics shall be paid not less than the appropriate wage rate and fringe benefits in the wage determination for the classification of work actually performed, without regard to skill, except as provided in the clause entitled Apprentices and Trainees. Laborers or mechanics performing work in more than one classification may be compensated at the rate specified for each classification for the time actually worked therein; provided, That the employer's payroll records accurately set forth the time spent in each classification in which work is performed. The wage determination (including any additional classifications and wage rates conformed under paragraph (b) of this clause) and the Davis-Bacon poster (WH-1321) shall be posted at all times by the Contractor and its subcontractors at the site of the work in a prominent and accessible place where it can be easily seen by the workers.

(b)(1) The Contracting Officer shall require that any class of laborers or mechanics which is not listed in the wage determination and which is to be employed under the contract shall be classified in conformance with the wage determination. The Contracting Officer shall approve an additional classification and wage rate and fringe benefits therefor only when all the following criteria have been met:

(i) The work to be performed by the classification requested is not performed by a classification in the wage determination.

(ii) The classification is utilized in the area by the construction industry.

(iii) The proposed wage rate, including any bona fide fringe benefits, bears a reasonable relationship to the wage rates contained in the wage determination.

(2) If the Contractor and the laborers and mechanics to be employed in the classification (if known), or their representatives, and the Contracting Officer agree on the classification and wage rate (including the amount designated for fringe benefits, where appropriate), a report of the action taken shall be sent by the Contracting Officer to the Administrator of the Wage and Hour Division, Employment Standards Administration, U.S. Department of Labor, Washington, DC 20210. The Administrator or an authorized representative will approve, modify, or disapprove every additional classification action within 30 days of receipt and so advise the Contracting Officer or will notify the Contracting Officer within the 30-day period that additional time is necessary.

(3) In the event the Contractor, the laborers or mechanics to be employed in the classification, or their representatives, and the Contracting Officer do not agree on the proposed classification and wage rate (including the amount designated for fringe benefits, where appropriate), the Contracting Officer shall refer the questions, including the views of all interested parties and the recommendation of the Contracting Officer, to the Administrator of the Wage and Hour Division for determination. The Administrator, or an authorized representative, will issue a determination within 30 days of receipt and so advise the Contracting Officer or will notify the Contracting Officer within the 30-day period that additional time is necessary.

(4) The wage rate (including fringe benefits, where appropriate) determined pursuant to subparagraphs (b)(2) and (b)(3) of this clause shall be paid to all workers performing work in the classification under this contract from the first day on which work is performed in the classification.

(c) Whenever the minimum wage rate prescribed in the contract for a class of laborers or mechanics includes a fringe benefit which is not expressed as an hourly rate, the Contractor shall either pay the benefit as stated in the wage determination or shall pay another bona fide fringe benefit or an hourly cash equivalent thereof.

53 If the Contractor does not make payments to a trustee or other third person, the Contractor may consider as part of the wages of any laborer or mechanic the amount of any costs reasonably anticipated in providing bona fide fringe benefits under a plan or program; provided, That the Secretary of Labor has found, upon the written request of the Contractor, that the applicable standards of the Davis-Bacon Act have been met. The Secretary of Labor may require the Contractor to set aside in a separate account assets for the meeting of obligations under the plan or program.

(End of clause)

52.222-7 WITHHOLDING OF FUNDS (FEB 1988)

The Contracting Officer shall, upon his or her own action or upon written request of an authorized representative of the Department of Labor, withhold or cause to be withheld from the Contractor under this contract or any other Federal contract with the same Prime Contractor, or any other Federally assisted contract subject to Davis-Bacon prevailing wage requirements, which is held by the same Prime Contractor, so much of the accrued payments or advances as may be considered necessary to pay laborers and mechanics, including apprentices, trainees, and helpers, employed by the Contractor or any subcontractor the full amount of wages required by the contract. In the event of failure to pay any laborer or mechanic, including any apprentice, trainee, or helper, employed or working on the site of the work, all or part of the wages required by the contract, the Contracting Officer may, after written notice to the Contractor, take such action as may be necessary to cause the suspension of any further payment, advance, or guarantee of funds until such violations have ceased.

(End of clause)

52.222-8 PAYROLLS AND BASIC RECORDS (FEB 1988)

(a) Payrolls and basic records relating thereto shall be maintained by the Contractor during the course of the work and preserved for a period of 3 years thereafter for all laborers and mechanics working at the site of the work. Such records shall contain the name, address, and social security number of each such worker, his or her correct classification, hourly rates of wages paid (including rates of contributions or costs anticipated for bona fide fringe benefits or cash equivalents thereof of the types described in section 1(b)(2)(B) of the Davis-Bacon Act), daily and weekly number of hours worked, deductions made, and actual wages paid. Whenever the Secretary of Labor has found, under paragraph (d) of the clause entitled Davis-Bacon Act, that the wages of any laborer or mechanic include the amount of any costs reasonably anticipated in providing benefits under a plan or program described in section 1(b)(2)(B) of the Davis-Bacon Act, the Contractor shall maintain records which show that the commitment to provide such benefits is enforceable, that the plan or program is financially responsible, and that the plan or program has been communicated in writing to the laborers or mechanics affected, and records which show the costs anticipated or the actual cost incurred in providing such benefits. Contractors employing apprentices or trainees under approved programs shall maintain written evidence of the registration of apprenticeship programs and certification of trainee programs, the registration of the apprentices and trainees, and the ratios and wage rates prescribed in the applicable programs.

(b)(1) The Contractor shall submit weekly for each week in which any contract work is performed a copy of all payrolls to the Contracting Officer. The payrolls submitted shall set out accurately and completely all of the information required to be maintained under paragraph (a) of this clause. This information may be submitted in any form desired. Optional Form WH-347 (Federal Stock Number 029-005-00014-1) is available for this purpose and may be purchased from the Superintendent of Documents, U.S. Government Printing Office, Washington, DC 20402. The Prime Contractor is responsible for the submission of copies of payrolls by all subcontractors.

(2) Each payroll submitted shall be accompanied by a "Statement of Compliance," signed by the Contractor or subcontractor or his or her agent who pays or supervises the payment of the persons employed under the contract and shall certify--

(i) That the payroll for the payroll period contains the information required to be maintained under paragraph (a) of this clause and that such information is correct and complete;

(ii) That each laborer or mechanic (including each helper, apprentice, and trainee) employed on the contract during

the payroll period has been paid the full weekly wages earned, without rebate, either directly or indirectly, and that no deductions have been made either directly or indirectly from the full wages earned, other than permissible deductions as set forth in the Regulations, 29 CFR Part 3; and

(iii) That each laborer or mechanic has been paid not less than the applicable wage rates and fringe benefits or cash equivalents for the classification of work performed, as specified in the applicable wage determination incorporated into the contract.

(3) The weekly submission of a properly executed certification set forth on the reverse side of Optional Form WH-347 shall satisfy the requirement for submission of the "Statement of Compliance" required by subparagraph (b)(2) of this clause.

(4) The falsification of any of the certifications in this clause may subject the Contractor or subcontractor to civil or criminal prosecution under Section 1001 of Title 18 and Section 3729 of Title 31 of the United States Code.

(c) The Contractor or subcontractor shall make the records required under paragraph (a) of this clause available for inspection, copying, or transcription by the Contracting Officer or authorized representatives of the Contracting Officer or the Department of Labor. The Contractor or subcontractor shall permit the Contracting Officer or representatives of the Contracting Officer or the Department of Labor to interview employees during working hours on the job. If the Contractor or subcontractor fails to submit required records or to make them available, the Contracting Officer may, after written notice to the Contractor, take such action as may be necessary to cause the suspension of any further payment. Furthermore, failure to submit the required records upon request or to make such records available may be grounds for debarment action pursuant to 29 CFR 5.12.

(End of clause)

52.222-9 APPRENTICES AND TRAINEES (FEB 1988)

(a) Apprentices. Apprentices will be permitted to work at less than the predetermined rate for the work they performed when they are employed pursuant to and individually registered in a bona fide apprenticeship program registered with the U.S. Department of Labor, Employment and Training Administration, Bureau of Apprenticeship and Training, or with a State Apprenticeship Agency recognized by the Bureau, or if a person is employed in his or her first 90 days of probationary employment as an apprentice in such an apprenticeship program, who is not individually registered in the program, but who has been certified by the Bureau of Apprenticeship and Training or a State Apprenticeship Agency (where appropriate) to be eligible for probationary employment as an apprentice. The allowable ratio of apprentices to journeymen on the job site in any craft classification shall not be greater than the ratio permitted to the Contractor as to the entire work force under the registered program. Any worker listed on a payroll at an apprentice wage rate, who is not registered or otherwise employed as stated in this paragraph, shall be paid not less than the applicable wage determination for the classification of work actually performed. In addition, any apprentice performing work on the job site in excess of the ratio permitted under the registered program shall be paid not less than the applicable wage rate on the wage determination for the work actually performed. Where a contractor is performing construction on a project in a locality other than that in which its program is registered, the ratios and wage rates (expressed in percentages of the journeyman's hourly rate) specified in the Contractor's or subcontractor's registered program shall be observed. Every apprentice must be paid at not less than the rate specified in the registered program for the apprentice's level of progress, expressed as a percentage of the journeyman hourly rate specified in the applicable wage determination. Apprentices shall be paid fringe benefits in accordance with the provisions of the apprenticeship program. If the apprenticeship program does not specify fringe benefits, apprentices must be paid the full amount of fringe benefits listed on the wage determination for the applicable classification. If the Administrator determines that a different practice prevails for the applicable apprentice classification, fringes shall be paid in accordance with that determination. In the event the Bureau of Apprenticeship and Training, or a State Apprenticeship Agency recognized by the Bureau, withdraws approval of an apprenticeship program, the Contractor will no longer be permitted to utilize apprentices at less than the

applicable predetermined rate for the work performed until an acceptable program is approved.

(b) Trainees. Except as provided in 29 CFR 5.16, trainees will not be permitted to work at less than the predetermined rate for the work performed unless they are employed pursuant to and individually registered in a program which has received prior approval, evidenced by formal certification by the U.S. Department of Labor, Employment and Training Administration. The ratio of trainees to journeymen on the job site shall not be greater than permitted under the plan approved by the Employment and Training Administration. Every trainee must be paid at not less than the rate specified in the approved program for the trainee's level of progress, expressed as a percentage of the journeyman hourly rate specified in the applicable wage determination. Trainees shall be paid fringe benefits in accordance with the provisions of the trainee program. If the trainee program does not mention fringe benefits, trainees shall be paid the full amount of fringe benefits listed in the wage determination unless the Administrator of the Wage and Hour Division determines that there is an apprenticeship program associated with the corresponding journeyman wage rate in the wage determination which provides for less than full fringe benefits for apprentices. Any employee listed on the payroll at a trainee rate who is not registered and participating in a training plan approved by the Employment and Training Administration shall be paid not less than the applicable wage rate in the wage determination for the classification of work actually performed. In addition, any trainee performing work on the job site in excess of the ratio permitted under the registered program shall be paid not less than the applicable wage rate in the wage determination for the work actually performed. In the event the Employment and Training Administration withdraws approval of a training program, the Contractor will no longer be permitted to utilize trainees at less than the applicable predetermined rate for the work performed until an acceptable program is approved.

(c) Equal employment opportunity. The utilization of apprentices, trainees, and journeymen under this clause shall be in conformity with the equal employment opportunity requirements of Executive Order 11246, as amended, and 29 CFR Part 30.

(End of clause)

52.222-10 COMPLIANCE WITH COPELAND ACT REQUIREMENTS (FEB 1988)

The Contractor shall comply with the requirements of 29 CFR Part 3, which are hereby incorporated by reference in this contract.

(End of clause)

52.222-11 SUBCONTRACTS (LABOR STANDARDS (FEB 1988)

(a) The Contractor or subcontractor shall insert in any subcontracts the clauses entitled Davis-Bacon Act, Contract Work Hours and Safety Standards Act-Overtime Compensation, Apprentices and Trainees, Payrolls and Basic Records, Compliance with Copeland Act Requirements, Withholding of Funds, Subcontracts (Labor Standards), Contract Termination-Debarment, Disputes Concerning Labor Standards, Compliance with Davis-Bacon and Related Act Regulations, and Certification of Eligibility, and such other clauses as the Contracting Officer may, by appropriate instructions, require, and also a clause requiring subcontractors to include these clauses in any lower tier subcontracts. The Prime Contractor shall be responsible for compliance by any subcontractor or lower tier subcontractor with all the contract clauses cited in this paragraph.

(b)(1) Within 14 days after award of the contract, the Contractor shall deliver to the Contracting Officer a completed Statement and Acknowledgment Form (SF 1413) for each subcontract, including the subcontractor's signed and dated acknowledgment that the clauses set forth in paragraph (a) of this clause have been included in the subcontract.

(i) Within 14 days after the award of any subsequently awarded subcontract the Contractor shall deliver to the Contracting Officer an updated completed SF 1413 for such additional subcontract.

(End of clause)

52.222-12 CONTRACT TERMINATION--DEBARMENT (FEB 1988)

A breach of the contract clauses entitled Davis-Bacon Act, Contract Work Hours and Safety Standards Act--Overtime Compensation, Apprentices and Trainees, Payrolls and Basic Records, Compliance with Copeland Act Requirements, Subcontracts (Labor Standards), Compliance with Davis-Bacon and Related Act Regulations, or Certification of Eligibility may be grounds for termination of the contract, and for debarment as a Contractor and subcontractor as provided in 29 CFR 5.12.

(End of clause)

52.222-13 COMPLIANCE WITH DAVIS-BACON AND RELATED ACT REGULATIONS (FEB 1988)

All rulings and interpretations of the Davis-Bacon and Related Acts contained in 29 CFR Parts 1, 3, and 5 are hereby incorporated by reference in this contract.

(End of clause)

52.222-14 DISPUTES CONCERNING LABOR STANDARDS (FEB 1988)

The United States Department of Labor has set forth in 29 CFR Parts 5, 6, and 7 procedures for resolving disputes concerning labor standards requirements. Such disputes shall be resolved in accordance with those procedures and not the Disputes clause of this contract. Disputes within the meaning of this clause include disputes between the Contractor (or any of its subcontractors) and the contracting agency, the U.S. Department of Labor, or the employees or their representatives.

(End of clause)

52.222-15 CERTIFICATION OF ELIGIBILITY (FEB 1988)

(a) By entering into this contract, the Contractor certifies that neither it (nor he or she) nor any person or firm who has an interest in the Contractor's firm is a person or firm ineligible to be awarded Government contracts by virtue of section 3(a) of the Davis-Bacon Act or 29 CFR 5.12(a)(1).

(b) No part of this contract shall be subcontracted to any person or firm ineligible for award of a Government contract by virtue of section 3(a) of the Davis-Bacon Act or 29 CFR 5.12(a)(1).

54 The penalty for making false statements is prescribed in the U.S. Criminal Code, 18 U.S.C. 1001.

(End of clause)

52.222-21 PROHIBITION OF SEGREGATED FACILITIES (FEB 1999)

(a) Segregated facilities, as used in this clause, means any waiting rooms, work areas, rest rooms and wash rooms, restaurants and other eating areas, time clocks, locker rooms and other storage or dressing areas, parking lots, drinking fountains, recreation or entertainment areas, transportation, and housing facilities provided for employees, that are segregated by explicit directive or are in fact segregated on the basis of race, color, religion, sex, or national origin because of written or oral policies or employee custom. The term does not include separate or single-user rest rooms or necessary dressing or sleeping areas provided to assure privacy between the sexes.

(b) The Contractor agrees that it does not and will not maintain or provide for its employees any segregated facilities at any of its establishments, and that it does not and will not permit its employees to perform their services at any location under its control where segregated facilities are maintained. The Contractor agrees that a breach of this clause is a violation of the Equal Opportunity clause in this contract.

(c) The Contractor shall include this clause in every subcontract and purchase order that is subject to the Equal Opportunity clause of this contract.

(End of clause)

52.222-26 EQUAL OPPORTUNITY (APR 2002)

(a) Definition. United States, as used in this clause, means the 50 States, the District of Columbia, Puerto Rico, the Northern Mariana Islands, American Samoa, Guam, the U.S. Virgin Islands, and Wake Island.

(b) If, during any 12-month period (including the 12 months preceding the award of this contract), the Contractor has been or is awarded nonexempt Federal contracts and/or subcontracts that have an aggregate value in excess of $10,000, the Contractor shall comply with paragraphs (b)(1) through (b)(11) of this clause, except for work performed outside the United States by employees who were not recruited within the United States. Upon request, the Contractor shall provide information necessary to determine the applicability of this clause.

(1) The Contractor shall not discriminate against any employee or applicant for employment because of race, color, religion, sex, or national origin. However, it shall not be a violation of this clause for the Contractor to extend a publicly announced preference in employment to Indians living on or near an Indian reservation, in connection with employment opportunities on or near an Indian reservation, as permitted by 41 CFR 60-1.5.

(2) The Contractor shall take affirmative action to ensure that applicants are employed, and that employees are treated during employment, without regard to their race, color, religion, sex, or national origin. This shall include, but not be limited to, (i) employment, (ii) upgrading, (iii) demotion, (iv) transfer, (v) recruitment or recruitment advertising, (vi) layoff or termination, (vii) rates of pay or other forms of compensation, and (viii) selection for training, including apprenticeship.

(3) The Contractor shall post in conspicuous places available to employees and applicants for employment the notices to be provided by the Contracting Officer that explain this clause.

(4) The Contractor shall, in all solicitations or advertisements for employees placed by or on behalf of the Contractor, state that all qualified applicants will receive consideration for employment without regard to race, color, religion, sex, or national origin.

(5) The Contractor shall send, to each labor union or representative of workers with which it has a collective bargaining agreement or other contract or understanding, the notice to be provided by the Contracting Officer

advising the labor union or workers' representative of the Contractor's commitments under this clause, and post copies of the notice in conspicuous places available to employees and applicants for employment.

(6) The Contractor shall comply with Executive Order 11246, as amended, and the rules, regulations, and orders of the Secretary of Labor.

(7) The Contractor shall furnish to the contracting agency all information required by Executive Order 11246, as amended, and by the rules, regulations, and orders of the Secretary of Labor. The Contractor shall also file Standard Form 100 (EEO-1), or any successor form, as prescribed in 41 CFR part 60-1. Unless the Contractor has filed within the 12 months preceding the date of contract award, the Contractor shall, within 30 days after contract award, apply to either the regional Office of Federal Contract Compliance Programs (OFCCP) or the local office of the Equal Employment Opportunity Commission for the necessary forms.

(8) The Contractor shall permit access to its premises, during normal business hours, by the contracting agency or the OFCCP for the purpose of conducting on-site compliance evaluations and complaint investigations. The Contractor shall permit the Government to inspect and copy any books, accounts, records (including computerized records), and other material that may be relevant to the matter under investigation and pertinent to compliance with Executive Order 11246, as amended, and rules and regulations that implement the Executive Order.

(9) If the OFCCP determines that the Contractor is not in compliance with this clause or any rule, regulation, or order of the Secretary of Labor, this contract may be canceled, terminated, or suspended in whole or in part and the Contractor may be declared ineligible for further Government contracts, under the procedures authorized in Executive Order 11246, as amended. In addition, sanctions may be imposed and remedies invoked against the Contractor as provided in Executive Order 11246, as amended; in the rules, regulations, and orders of the Secretary of Labor; or as otherwise provided by law.

(10) The Contractor shall include the terms and conditions of subparagraphs (b)(1) through (11) of this clause in every subcontract or purchase order that is not exempted by the rules, regulations, or orders of the Secretary of Labor issued under Executive Order 11246, as amended, so that these terms and conditions will be binding upon each subcontractor or vendor.

(11) The Contractor shall take such action with respect to any subcontract or purchase order as the contracting officer may direct as a means of enforcing these terms and conditions, including sanctions for noncompliance; provided, that if the Contractor becomes involved in, or is threatened with, litigation with a subcontractor or vendor as a result of any direction, the Contractor may request the United States to enter into the litigation to protect the interests of the United States.

(c) Notwithstanding any other clause in this contract, disputes relative to this clause will be governed by the procedures in 41 CFR 60-1.1.

(End of clause)

52.222-27 AFFIRMATIVE ACTION COMPLIANCE REQUIREMENTS FOR CONSTRUCTION (FEB 1999)

(a) Definitions. "Covered area," as used in this clause, means the geographical area described in the solicitation for this contract.

"Deputy Assistant Secretary," as used in this clause, means Deputy Assistant Secretary for Federal Contract Compliance, U.S. Department of Labor, or a designee.

"Employer's identification number," as used in this clause, means the Federal Social Security number used on the employer's quarterly federal tax return, U.S. Treasury Department Form 941.

"Minority," as used in this clause, means--

(1) American Indian or Alaskan Native (all persons having origins in any of the original peoples of North America and maintaining identifiable tribal affiliations through membership and participation or community identification).

(2) Asian and Pacific Islander (all persons having origins in any of the original peoples of the Far East, Southeast Asia, the Indian Subcontinent, or the Pacific Islands);

(3) Black (all persons having origins in any of the black African racial groups not of Hispanic origin); and

(4) Hispanic (all persons of Mexican, Puerto Rican, Cuban, Central or South American, or other Spanish culture or origin, regardless of race).

(b) If the Contractor, or a subcontractor at any tier, subcontracts a portion of the work involving any construction trade, each such subcontract in excess of $10,000 shall include this clause and the Notice containing the goals for minority and female participation stated in the solicitation for this contract.

(c) If the Contractor is participating in a Hometown Plan (41 CFR 60-4) approved by the U.S. Department of Labor in a covered area, either individually or through an association, its affirmative action obligations on all work in the plan area (including goals) shall comply with the plan for those trades that have unions participating in the plan. Contractors must be able to demonstrate participation in, and compliance with, the provisions of the plan. Each Contractor or subcontractor participating in an approved plan is also required to comply with its obligations under the Equal Opportunity clause, and to make a good faith effort to achieve each goal under the plan in each trade in which it has employees. The overall good-faith performance by other Contractors or subcontractors toward a goal in an approved plan does not excuse any Contractor's or subcontractor's failure to make good-faith efforts to achieve the plan's goals.

(d) The Contractor shall implement the affirmative action procedures in subparagraphs (g)(1) through (16) of this clause. The goals stated in the solicitation for this contract are expressed as percentages of the total hours of employment and training of minority and female utilization that the Contractor should reasonably be able to achieve in each construction trade in which it has employees in the covered area. If the Contractor performs construction work in a geographical area located outside of the covered area, it shall apply the goals established for the geographical area where that work is actually performed. The Contractor is expected to make substantially uniform progress toward its goals in each craft.

(e) Neither the terms and conditions of any collective bargaining agreement, nor the failure by a union with which the Contractor has a collective bargaining agreement, to refer minorities or women shall excuse the Contractor's obligations under this clause, Executive Order 11246, as amended, or the regulations thereunder.

(f) In order for the nonworking training hours of apprentices and trainees to be counted in meeting the goals, apprentices and trainees must be employed by the Contractor during the training period, and the Contractor must have made a commitment to employ the apprentices and trainees at the completion of their training, subject to the availability of employment opportunities. Trainees must be trained pursuant to training programs approved by the U.S. Department of Labor.

(g) The Contractor shall take affirmative action to ensure equal employment opportunity. The evaluation of the Contractor's compliance with this clause shall be based upon its effort to achieve maximum results from its actions. The Contractor shall document these efforts fully and implement affirmative action steps at least as extensive as the following:

(1) Ensure a working environment free of harassment, intimidation, and coercion at all sites and in all facilities where the Contractor's employees are assigned to work. The Contractor, if possible, will assign two or more women to each construction project. The Contractor shall ensure that foremen, superintendents, and other onsite supervisory

personnel are aware of and carry out the Contractor's obligation to maintain such a working environment, with specific attention to minority or female individuals working at these sites or facilities.

(2) Establish and maintain a current list of sources for minority and female recruitment. Provide written notification to minority and female recruitment sources and community organizations when the Contractor or its unions have employment opportunities available, and maintain a record of the organizations' responses.

(3) Establish and maintain a current file of the names, addresses, and telephone numbers of each minority and female off-the-street applicant, referrals of minorities or females from unions, recruitment sources, or community organizations, and the action taken with respect to each individual. If an individual was sent to the union hiring hall for referral and not referred back to the Contractor by the union or, if referred back, not employed by the Contractor, this shall be documented in the file, along with whatever additional actions the Contractor may have taken.

(4) Immediately notify the Deputy Assistant Secretary when the union or unions with which the Contractor has a collective bargaining agreement has not referred back to the Contractor a minority or woman sent by the Contractor, or when the Contractor has other information that the union referral process has impeded the Contractor's efforts to meet its obligations.

(5) Develop on-the-job training opportunities and/or participate in training programs for the area that expressly include minorities and women, including upgrading programs and apprenticeship and trainee programs relevant to the Contractor's employment needs, especially those programs funded or approved by the Department of Labor. The Contractor shall provide notice of these programs to the sources compiled under subparagraph (g)(2) of this clause.

(6) Disseminate the Contractor's equal employment policy by--

(i) Providing notice of the policy to unions and to training, recruitment, and outreach programs, and requesting their cooperation in assisting the Contractor in meeting its contract obligations;

(ii) Including the policy in any policy manual and in collective bargaining agreements;

(iii) Publicizing the policy in the company newspaper, annual report, etc.;

(iv) Reviewing the policy with all management personnel and with all minority and female employees at least once a year; and

(v) Posting the policy on bulletin boards accessible to employees at each location where construction work is performed.

(7) Review, at least annually, the Contractor's equal employment policy and affirmative action obligations with all employees having responsibility for hiring, assignment, layoff, termination, or other employment decisions. Conduct review of this policy with all on-site supervisory personnel before initiating construction work at a job site. A written record shall be made and maintained identifying the time and place of these meetings, persons attending, subject matter discussed, and disposition of the subject matter.

(8) Disseminate the Contractor's equal employment policy externally by including it in any advertising in the news media, specifically including minority and female news media. Provide written notification to, and discuss this policy with, other Contractors and subcontractors with which the Contractor does or anticipates doing business.

(9) Direct recruitment efforts, both oral and written, to minority, female, and community organizations, to schools with minority and female students, and to minority and female recruitment and training organizations serving the Contractor's recruitment area and employment needs. Not later than 1 month before the date for acceptance of applications for apprenticeship or training by any recruitment source, send written notification to organizations such as the above, describing the openings, screening procedures, and tests to be used in the selection process.

(10) Encourage present minority and female employees to recruit minority persons and women. Where reasonable, provide after-school, summer, and vacation employment to minority and female youth both on the site and in other areas of the Contractor's workforce.

(11) Validate all tests and other selection requirements where required under 41 CFR 60-3.

(12) Conduct, at least annually, an inventory and evaluation at least of all minority and female personnel for promotional opportunities. Encourage these employees to seek or to prepare for, through appropriate training, etc., opportunities for promotion.

(13) Ensure that seniority practices, job classifications, work assignments, and other personnel practices do not have a discriminatory effect by continually monitoring all personnel and employment-related activities to ensure that the Contractor's obligations under this contract are being carried out.

(14) Ensure that all facilities and company activities are nonsegregated except that separate or single-user rest rooms and necessary dressing or sleeping areas shall be provided to assure privacy between the sexes.

(15) Maintain a record of solicitations for subcontracts for minority and female construction contractors and suppliers, including circulation of solicitations to minority and female contractor associations and other business associations.

(16) Conduct a review, at least annually, of all supervisors' adherence to and performance under the Contractor's equal employment policy and affirmative action obligations.

(h) The Contractor is encouraged to participate in voluntary associations that may assist in fulfilling one or more of the affirmative action obligations contained in subparagraphs (g)(1) through (16) of this clause. The efforts of a contractor association, joint contractor-union, contractor-community, or similar group of which the contractor is a member and participant may be asserted as fulfilling one or more of its obligations under subparagraphs (g)(1) through (16) of this clause, provided the Contractor--

(1) Actively participates in the group;

(2) Makes every effort to ensure that the group has a positive impact on the employment of minorities and women in the industry;

(3) Ensures that concrete benefits of the program are reflected in the Contractor's minority and female workforce participation;

(4) Makes a good-faith effort to meet its individual goals and timetables; and

(5) Can provide access to documentation that demonstrates the effectiveness of actions taken on behalf of the Contractor. The obligation to comply is the Contractor's, and failure of such a group to fulfill an obligation shall not be a defense for the Contractor's noncompliance.

(i) A single goal for minorities and a separate single goal for women shall be established. The Contractor is required to provide equal employment opportunity and to take affirmative action for all minority groups, both male and female, and all women, both minority and nonminority. Consequently, the Contractor may be in violation of Executive Order 11246, as amended, if a particular group is employed in a substantially disparate manner.

(j) The Contractor shall not use goals or affirmative action standards to discriminate against any person because of race, color, religion, sex, or national origin.

(k) The Contractor shall not enter into any subcontract with any person or firm debarred from Government contracts

under Executive Order 11246, as amended.

(l) The Contractor shall carry out such sanctions and penalties for violation of this clause and of the Equal Opportunity clause, including suspension, termination, and cancellation of existing subcontracts, as may be imposed or ordered under Executive Order 11246, as amended, and its implementing regulations, by the OFCCP. Any failure to carry out these sanctions and penalties as ordered shall be a violation of this clause and Executive Order 11246, as amended.

(m) The Contractor in fulfilling its obligations under this clause shall implement affirmative action procedures at least as extensive as those prescribed in paragraph (g) of this clause, so as to achieve maximum results from its efforts to ensure equal employment opportunity. If the Contractor fails to comply with the requirements of Executive Order 11246, as amended, the implementing regulations, or this clause, the Deputy Assistant Secretary shall take action as prescribed in 41 CFR 60-4.8.

(n) The Contractor shall designate a responsible official to--

(1) Monitor all employment-related activity to ensure that the Contractor's equal employment policy is being carried out;

(2) Submit reports as may be required by the Government; and

(3) Keep records that shall at least include for each employee the name, address, telephone number, construction trade, union affiliation (if any), employee identification number, social security number, race, sex, status (e.g., mechanic, apprentice, trainee, helper, or laborer), dates of changes in status, hours worked per week in the indicated trade, rate of pay, and locations at which the work was performed. Records shall be maintained in an easily understandable and retrievable form; however, to the degree that existing records satisfy this requirement, separate records are not required to be maintained.

Nothing contained herein shall be construed as a limitation upon the application of other laws that establish different standards of compliance or upon the requirements for the hiring of local or other area residents (e.g., those under the Public Works Employment Act of 1977 and the Community Development Block Grant Program).

(End of clause)

52.222-35 EQUAL OPPORTUNITY FOR SPECIAL DISABLED VETERANS, VETERANS OF THE VIETNAM ERA, AND OTHER ELIGIBLE VETERANS (DEC 2001)

(a) Definitions. As used in this clause--

All employment openings means all positions except executive and top management, those positions that will be filled from within the Contractor's organization, and positions lasting 3 days or less. This term includes full-time employment, temporary employment of more than 3 days duration, and part-time employment.

Executive and top management means any employee--

(1) Whose primary duty consists of the management of the enterprise in which the individual is employed or of a customarily recognized department or subdivision thereof;

(2) Who customarily and regularly directs the work of two or more other employees;

(3) Who has the authority to hire or fire other employees or whose suggestions and recommendations as to the hiring or firing and as to the advancement and promotion or any other change of status of other employees will be given particular weight;

(4) Who customarily and regularly exercises discretionary powers; and

(5) Who does not devote more than 20 percent or, in the case of an employee of a retail or service establishment, who does not devote more than 40 percent of total hours of work in the work week to activities that are not directly and closely related to the performance of the work described in paragraphs (1) through (4) of this definition. This paragraph (5) does not apply in the case of an employee who is in sole charge of an establishment or a physically separated branch establishment, or who owns at least a 20 percent interest in the enterprise in which the individual is employed.

Other eligible veteran means any other veteran who served on active duty during a war or in a campaign or expedition for which a campaign badge has been authorized.

Positions that will be filled from within the Contractor's organization means employment openings for which the Contractor will give no consideration to persons outside the Contractor's organization (including any affiliates, subsidiaries, and parent companies) and includes any openings the Contractor proposes to fill from regularly established “recall” lists. The exception does not apply to a particular opening once an employer decides to consider applicants outside of its organization.

Qualified special disabled veteran means a special disabled veteran who satisfies the requisite skill, experience, education, and other job-related requirements of the employment position such veteran holds or desires, and who, with or without reasonable accommodation, can perform the essential functions of such position.

Special disabled veteran means--

(1) A veteran who is entitled to compensation (or who but for the receipt of military retired pay would be entitled to compensation) under laws administered by the Department of Veterans Affairs for a disability--

(i) Rated at 30 percent or more; or

(ii) Rated at 10 or 20 percent in the case of a veteran who has been determined under 38 U.S.C. 3106 to have a serious employment handicap (i.e., a significant impairment of the veteran's ability to prepare for, obtain, or retain employment consistent with the veteran's abilities, aptitudes, and interests); or

(2) A person who was discharged or released from active duty because of a service-connected disability.

Veteran of the Vietnam era means a person who--

(1) Served on active duty for a period of more than 180 days and was discharged or released from active duty with other than a dishonorable discharge, if any part of such active duty occurred--

(i) In the Republic of Vietnam between February 28, 1961, and May 7, 1975; or

(ii) Between August 5, 1964, and May 7, 1975, in all other cases; or

(2) Was discharged or released from active duty for a service-connected disability if any part of the active duty was performed--

(i) In the Republic of Vietnam between February 28, 1961, and May 7, 1975; or

(ii) Between August 5, 1964, and May 7, 1975, in all other cases.

(b) General. (1) The Contractor shall not discriminate against the individual because the individual is a special disabled veteran, a veteran of the Vietnam era, or other eligible veteran, regarding any position for which the employee or applicant for employment is qualified. The Contractor shall take affirmative action to employ, advance in employment, and otherwise treat qualified special disabled veterans, veterans of the Vietnam era, and other eligible veterans without discrimination based upon their disability or veterans' status in all employment practices such as--

(i) Recruitment, advertising, and job application procedures;

(ii) Hiring, upgrading, promotion, award of tenure, demotion, transfer, layoff, termination, right of return from layoff and rehiring;

(iii) Rate of pay or any other form of compensation and changes in compensation;

(iv) Job assignments, job classifications, organizational structures, position descriptions, lines of progression, and seniority lists;

(v) Leaves of absence, sick leave, or any other leave;

(vi) Fringe benefits available by virtue of employment, whether or not administered by the Contractor;

(vii) Selection and financial support for training, including apprenticeship, and on-the-job training under 38 U.S.C. 3687, professional meetings, conferences, and other related activities, and selection for leaves of absence to pursue training;

(viii) Activities sponsored by the Contractor including social or recreational programs; and

(ix) Any other term, condition, or privilege of employment.

(2) The Contractor shall comply with the rules, regulations, and relevant orders of the Secretary of Labor issued under the Vietnam Era Veterans' Readjustment Assistance Act of 1972 (the Act), as amended (38 U.S.C. 4211 and 4212).

(c) Listing openings. (1) The Contractor shall immediately list all employment openings that exist at the time of the execution of this contract and those which occur during the performance of this contract, including those not generated by this contract, and including those occurring at an establishment of the Contractor other than the one where the contract is being performed, but excluding those of independently operated corporate affiliates, at an appropriate local public employment service office of the State wherein the opening occurs. Listing employment openings with the U.S. Department of Labor's America's Job Bank shall satisfy the requirement to list jobs with the local employment service office.

(2) The Contractor shall make the listing of employment openings with the local employment service office at least concurrently with using any other recruitment source or effort and shall involve the normal obligations of placing a bona fide job order, including accepting referrals of veterans and nonveterans. This listing of employment openings does not require hiring any particular job applicant or hiring from any particular group of job applicants and is not intended to relieve the Contractor from any requirements of Executive orders or regulations concerning nondiscrimination in employment.

(3) Whenever the Contractor becomes contractually bound to the listing terms of this clause, it shall advise the State public employment agency in each State where it has establishments of the name and location of each hiring location in the State. As long as the Contractor is contractually bound to these terms and has so advised the State agency, it need not advise the State agency of subsequent contracts. The Contractor may advise the State agency when it is no longer bound by this contract clause.

(d) Applicability. This clause does not apply to the listing of employment openings that occur and are filled outside the 50 States, the District of Columbia, the Commonwealth of Puerto Rico, the Commonwealth of the Northern Mariana Islands, American Samoa, Guam, the Virgin Islands of the United States, and Wake Island.

(e) Postings. (1) The Contractor shall post employment notices in conspicuous places that are available to employees and applicants for employment.

(2) The employment notices shall--

(i) State the rights of applicants and employees as well as the Contractor's obligation under the law to take affirmative action to employ and advance in employment qualified employees and applicants who are special disabled veterans, veterans of the Vietnam era, and other eligible veterans; and

(ii) Be in a form prescribed by the Deputy Assistant Secretary for Federal Contract Compliance Programs, Department of Labor (Deputy Assistant Secretary of Labor), and provided by or through the Contracting Officer.

(3) The Contractor shall ensure that applicants or employees who are special disabled veterans are informed of the contents of the notice (e.g., the Contractor may have the notice read to a visually disabled veteran, or may lower the posted notice so that it can be read by a person in a wheelchair).

(4) The Contractor shall notify each labor union or representative of workers with which it has a collective bargaining agreement, or other contract understanding, that the Contractor is bound by the terms of the Act and is committed to take affirmative action to employ, and advance in employment, qualified special disabled veterans, veterans of the Vietnam era, and other eligible veterans.

(f) Noncompliance. If the Contractor does not comply with the requirements of this clause, the Government may take appropriate actions under the rules, regulations, and relevant orders of the Secretary of Labor issued pursuant to the Act.

(g) Subcontracts. The Contractor shall insert the terms of this clause in all subcontracts or purchase orders of $25,000 or more unless exempted by rules, regulations, or orders of the Secretary of Labor. The Contractor shall act as specified by the Deputy Assistant Secretary of Labor to enforce the terms, including action for noncompliance.

(End of clause)

52.222-36 AFFIRMATIVE ACTION FOR WORKERS WITH DISABILITIES (JUN 1998)

(a) General. (1) Regarding any position for which the employee or applicant for employment is qualified, the Contractor shall not discriminate against any employee or applicant because of physical or mental disability. The Contractor agrees to take affirmative action to employ, advance in employment, and otherwise treat qualified individuals with disabilities without discrimination based upon their physical or mental disability in all employment practices such as--

(i) Recruitment, advertising, and job application procedures;

(ii) Hiring, upgrading, promotion, award of tenure, demotion, transfer, layoff, termination, right of return from layoff, and rehiring;

(iii) Rates of pay or any other form of compensation and changes in compensation;

(iv) Job assignments, job classifications, organizational structures, position descriptions, lines of progression, and seniority lists;

(v) Leaves of absence, sick leave, or any other leave;

(vi) Fringe benefits available by virtue of employment, whether or not administered by the Contractor;

(vii) Selection and financial support for training, including apprenticeships, professional meetings, conferences, and other related activities, and selection for leaves of absence to pursue training;

(viii) Activities sponsored by the Contractor, including social or recreational programs; and

(ix) Any other term, condition, or privilege of employment.

(2) The Contractor agrees to comply with the rules, regulations, and relevant orders of the Secretary of Labor (Secretary) issued under the Rehabilitation Act of 1973 (29 U.S.C. 793) (the Act), as amended.

(b) Postings. (1) The Contractor agrees to post employment notices stating--

(i) The Contractor's obligation under the law to take affirmative action to employ and advance in employment qualified individuals with disabilities; and

(ii) The rights of applicants and employees.

(2) These notices shall be posted in conspicuous places that are available to employees and applicants for employment. The Contractor shall ensure that applicants and employees with disabilities are informed of the contents of the notice (e.g., the Contractor may have the notice read to a visually disabled individual, or may lower the posted notice so that it might be read by a person in a wheelchair). The notices shall be in a form prescribed by the Deputy Assistant Secretary for Federal Contract Compliance of the U.S. Department of Labor (Deputy Assistant Secretary) and shall be provided by or through the Contracting Officer.

(3) The Contractor shall notify each labor union or representative of workers with which it has a collective bargaining agreement or other contract understanding, that the Contractor is bound by the terms of Section 503 of the Act and is committed to take affirmative action to employ, and advance in employment, qualified individuals with physical or mental disabilities.

(c) Noncompliance. If the Contractor does not comply with the requirements of this clause, appropriate actions may be taken under the rules, regulations, and relevant orders of the Secretary issued pursuant to the Act.

(d) Subcontracts. The Contractor shall include the terms of this clause in every subcontract or purchase order in excess of $10,000 unless exempted by rules, regulations, or orders of the Secretary. The Contractor shall act as specified by the Deputy Assistant Secretary to enforce the terms, including action for noncompliance.

(End of clause)

52.222-37 EMPLOYMENT REPORTS ON SPECIAL DISABLED VETERANS, VETERANS OF THE VIETNAM ERA, AND OTHER ELIGIBLE VETERANS (DEC 2001)

(a) Unless the Contractor is a State or local government agency, the Contractor shall report at least annually, as required by the Secretary of Labor, on--

(1) The number of disabled veterans and the number of veterans of the Vietnam era in the workforce of the contractor by job category and hiring location; and

(2) The total number of new employees hired during the period covered by the report, and of that total, the number of disabled veterans, and the number of veterans of the Vietnam era.

(b) The above items shall be reported by completing the form entitled "Federal Contractor Veterans' Employment Report VETS-100."

(c) Reports shall be submitted no later than September 30 of each year beginning September 30, 1988.

(d) The employment activity report required by paragraph (a)(2) of this clause shall reflect total hires during the most recent 12-month period as of the ending date selected for the employment profile report required by paragraph (a)(1) of this clause. Contractors may select an ending date: (1) As of the end of any pay period during the period January through March 1st of the year the report is due, or (2) as of December 31, if the contractor has previous written approval from the Equal Employment Opportunity Commission to do so for purposes of submitting the Employer Information Report EEO-1 (Standard Form 100).

(e) The count of veterans reported according to paragraph (a) of this clause shall be based on voluntary disclosure. Each Contractor subject to the reporting requirements at 38 U.S.C. 4212 shall invite all disabled veterans and veterans of the Vietnam era who wish to benefit under the affirmative action program at 38 U.S.C. 4212 to identify themselves to the Contractor. The invitation shall state that the information is voluntarily provided; that the information will be kept confidential; that disclosure or refusal to provide the information will not subject the applicant or employee to any adverse treatment; and that the information will be used only in accordance with the regulations promulgated under 38 U.S.C. 4212.

(f) Subcontracts. The Contractor shall include the terms of this clause in every subcontract or purchase order of $10,000 or more unless exempted by rules, regulations, or orders of the Secretary.

(End of clause)

52.223-5 POLLUTION PREVENTION AND RIGHT-TO-KNOW INFORMATION (AUG 2003)

(a) Definitions. As used in this clause--

Priority chemical means a chemical identified by the Interagency Environmental Leadership Workgroup or, alternatively, by an agency pursuant to section 503 of Executive Order 13148 of April 21, 2000, Greening the Government through Leadership in Environmental Management.

“Toxic chemical means a chemical or chemical category listed in 40 CFR 372.65.”

(b) Executive Order 13148 requires Federal facilities to comply with the provisions of the Emergency Planning and Community Right-to-Know Act of 1986 (EPCRA) (42 U.S.C. 11001-11050) and the Pollution Prevention Act of 1990 (PPA) (42 U.S.C. 13101-13109).

(c) The Contractor shall provide all information needed by the Federal facility to comply with the following:

(1) The emergency planning reporting requirements of section 302 of EPCRA.

(2) The emergency notice requirements of section 304 of EPCRA.

(3) The list of Material Safety Data Sheets, required by section 311 of EPCRA.

(4) The emergency and hazardous chemical inventory forms of section 312 of EPCRA.

(5) The toxic chemical release inventory of section 313 of EPCRA, which includes the reduction and recycling information required by section 6607 of PPA.

(6) The toxic chemical, priority chemical, and hazardous substance release and use reduction goals of sections 502 and 503 of Executive Order 13148.

(End of clause)

52.223-6 DRUG-FREE WORKPLACE (MAY 2001)

(a) Definitions. As used in this clause --

"Controlled substance" means a controlled substance in schedules I through V of section 202 of the Controlled Substances Act (21 U.S.C. 812) and as further defined in regulation at 21 CFR 1308.11 - 1308.15.

"Conviction" means a finding of guilt (including a plea of nolo contendere) or imposition of sentence, or both, by any judicial body charged with the responsibility to deter- mine violations of the Federal or State criminal drug statutes.

"Criminal drug statute" means a Federal or non-Federal criminal statute involving the manufacture, distribution, dispensing, possession, or use of any controlled substance.

"Drug-free workplace" means the site(s) for the performance of work done by the Contractor in connection with a specific contract at which employees of the Contractor are prohibited from engaging in the unlawful manufacture, distribution, dispensing, possession, or use of a controlled substance.

"Employee" means an employee of a Contractor directly engaged in the performance of work under a Government contract. "Directly engaged" is defined to include all direct cost employees and any other Contractor employee who has other than a minimal impact or involvement in contract performance.

"Individual" means an offeror/contractor that has no more than one employee including the offeror/contractor.

(b) The Contractor, if other than an individual, shall-- within 30 days after award (unless a longer period is agreed to in writing for contracts of 30 days or more performance duration), or as soon as possible for contracts of less than 30 days performance duration--

(1) Publish a statement notifying its employees that the unlawful manufacture, distribution, dispensing, possession, or use of a controlled substance is prohibited in the Contractor's workplace and specifying the actions that will be taken against employees for violations of such prohibition;

(2) Establish an ongoing drug-free awareness program to inform such employees about--

(i) The dangers of drug abuse in the workplace;

(ii) The Contractor's policy of maintaining a drug-free workplace;

(iii) Any available drug counseling, rehabilitation, and employee assistance programs; and

(iv) The penalties that may be imposed upon employees for drug abuse violations occurring in the workplace;

(3) Provide all employees engaged in performance of the contract with a copy of the statement required by subparagraph (b)(1) of this clause;

(4) Notify such employees in writing in the statement required by subparagraph (b)(1) of this clause that, as a condition of continued employment on this contract, the employee will--

(i) Abide by the terms of the statement; and

(ii) Notify the employer in writing of the employee's conviction under a criminal drug statute for a violation occurring in the workplace no later than 5 days after such conviction.

(5) Notify the Contracting Officer in writing within 10 days after receiving notice under subdivision (b)(4)(ii) of this clause, from an employee or otherwise receiving actual notice of such conviction. The notice shall include the position title of the employee;

(6) Within 30 days after receiving notice under subdivision (b)(4)(ii) of this clause of a conviction, take one of the following actions with respect to any employee who is convicted of a drug abuse violation occurring in the workplace:

(i) Taking appropriate personnel action against such employee, up to and including termination; or

(ii) Require such employee to satisfactorily participate in a drug abuse assistance or rehabilitation program approved for such purposes by a Federal, State, or local health, law enforcement, or other appropriate agency; and

(7) Make a good faith effort to maintain a drug-free workplace through implementation of subparagraphs (b)(1) though (b)(6) of this clause.

(c) The Contractor, if an individual, agrees by award of the contract or acceptance of a purchase order, not to engage in the unlawful manufacture, distribution, dispensing, possession, or use of a controlled substance while performing this contract.

(d) In addition to other remedies available to the Government, the Contractor's failure to comply with the requirements of paragraph (b) or (c) of this clause may, pursuant to FAR 23.506, render the Contractor subject to suspension of contract payments, termination of the contract for default, and suspension or debarment.

(End of clause)

52.223-14 TOXIC CHEMICAL RELEASE REPORTING (AUG 2003)

(a) Unless otherwise exempt, the Contractor, as owner or operator of a facility used in the performance of this contract, shall file by July 1 for the prior calendar year an annual Toxic Chemical Release Inventory Form (Form R) as described in sections 313(a) and (g) of the Emergency Planning and Community Right-to-Know Act of 1986 (EPCRA) (42 U.S.C. 11023(a) and (g)), and section 6607 of the Pollution Prevention Act of 1990 (PPA) (42 U.S.C. 13106). The Contractor shall file, for each facility subject to the Form R filing and reporting requirements, the annual Form R throughout the life of the contract.

(b) A Contractor-owned or -operated facility used in the performance of this contract is exempt from the requirement to file an annual Form R if--

(1) The facility does not manufacture, process, or otherwise use any toxic chemicals listed in 40 CFR 372.65;

(2) The facility does not have 10 or more full-time employees as specified in section 313(b)(1)(A) of EPCRA, 42 U.S.C. 11023(b)(1)(A);

(3) The facility does not meet the reporting thresholds of toxic chemicals established under of EPCRA, 42 U.S.C. 11023(f) (including the alternate thresholds at 40 CFR 372.27, provided an appropriate certification form has been filed with EPA);

(4) The facility does not fall within the following Standard Industrial Classification (SIC) codes or their corresponding North American Industry Classification System sectors:

(i) Major group code 10 (except 1011, 1081, and 1094.

(ii) Major group code 12 (except 1241).

(iii) Major group codes 20 through 39.

(iv) Industry code 4911, 4931, or 4939 (limited to facilities that combust coal and/or oil for the purpose of generating power for distribution in commerce).

(v) Industry code 4953 (limited to facilities regulated under the Resource Conservation and Recovery Act, Subtitle C (42 U.S.C. 6921, et seq.)), 5169, 5171, or 7389 (limited to facilities primarily engaged in solvent recovery services on a contract or fee basis); or

(5) The facility is not located in the United States or its outlying areas.

(c) If the Contractor has certified to an exemption in accordance with one or more of the criteria in paragraph (b) of this clause, and after award of the contract circumstances change so that any of its owned or operated facilities used in the performance of this contract is no longer exempt--

(1) The Contractor shall notify the Contracting Officer; and

(2) The Contractor, as owner or operator of a facility used in the performance of this contract that is no longer exempt, shall (i) submit a Toxic Chemical Release Inventory Form (Form R) on or before July 1 for the prior calendar year during which the facility becomes eligible; and (ii) continue to file the annual Form R for the life of the contract for such facility.

(d) The Contracting Officer may terminate this contract or take other action as appropriate, if the Contractor fails to comply accurately and fully with the EPCRA and PPA toxic chemical release filing and reporting requirements.

(e) Except for acquisitions of commercial items, as defined in FAR Part 2, the Contractor shall--

(1) For competitive subcontracts expected to exceed $100,000 (including all options), include a solicitation provision substantially the same as the provision at FAR 52.223-13, Certification of Toxic Chemical Release Reporting; and

(2) Include in any resultant subcontract exceeding $100,000 (including all options), the substance of this clause, except this paragraph (e).

(End of clause)

52.225-5 TRADE AGREEMENTS (OCT 2003)

(a) Definitions. As used in this clause.

Caribbean Basin country means any of the following countries: Antigua and Barbuda, Aruba, Bahamas, Barbados, Belize, British Virgin Islands, Costa Rica, Dominica, Dominican Republic, El Salvador, Grenada, Guatemala, Guyana, Haiti, Jamaica, Montserrat, Netherlands Antilles, Nicaragua, Panama, St. Kitts and Nevis, St. Lucia, St. Vincent and the Grenadines, Trinidad and Tobago.

Caribbean Basin country end product means an article that--

(1) Is wholly the growth, product, or manufacture of a Caribbean Basin country; or

(2) In the case of an article that consists in whole or in part of materials from another country, has been substantially transformed in a Caribbean Basin country into a new and different article of commerce with a name, character, or use distinct from that of the article or articles from which it was transformed. The term refers to a product offered for purchase under a supply contract, but for purposes of calculating the value of the end product includes services (except transportation services) incidental to the article, provided that the value of those incidental services does not exceed that of the article itself. The term excludes products that are excluded from duty-free treatment for Caribbean countries under 19 U.S.C. 2703(b), which presently are--

(i) Textiles and apparel articles that are subject to textile agreements;

(ii) Footwear, handbags, luggage, flat goods, work gloves, and leather wearing apparel not designated as eligible articles for the purpose of the Generalized System of Preferences under Title V of the Trade Act of 1974;

(iii) Tuna, prepared or preserved in any manner in airtight containers;

(iv) Petroleum, or any product derived from petroleum; and

(v) Watches and watch parts (including cases, bracelets, and straps) of whatever type including, but not limited to, mechanical, quartz digital, or quartz analog, if such watches or watch parts contain any material that is the product of any country to which the Harmonized Tariff Schedule of the United States (HTSUS) column 2 rates of duty apply.

Designated country means any of the following countries: Aruba, Austria, Bangladesh Belgium, Benin, Bhutan, Botswana, Burkina Faso, Burundi, Canada, Cape Verde, Central African Republic, Chad, Comoros, Denmark, Djibouti, Equatorial Guinea.

Finland, France, Gambia, Germany, Greece, Guinea, Guinea-Bissau, Haiti, Honduras, Hong Kong, Iceland, Ireland, Israel, Italy, Japan.

Kiribati, Korea, Republic of Lesotho, Liechtenstein, Luxembourg, Malawi, Maldives, Mali, Mozambique, Nepal, Netherlands, Niger, Norway, Portugal, Rwanda.

Sao Tome and Principe, Sierra Leone, Singapore, Somalia, Spain, Sweden, Switzerland, Tanzania U.R., Togo, Tuvalu, Uganda, United Kingdom, Vanuatu, Western Samoa, Yemen.

Designated country end product means an article that--

(1) Is wholly the growth, product, or manufacture of a designated country; or

(2) In the case of an article that consists in whole or in part of materials from another country, has been substantially transformed in a designated country into a new and different article of commerce with a name, character, or use distinct from that of the article or articles from which it was transformed. The term refers to a product offered for purchase under a supply contract, but for purposes of calculating the value of the end product includes services, (except transportation services) incidental to the article, provided that the value of those incidental services does not exceed that of the article itself.

End product means supplies delivered under a line item of a Government contract.

North American Free Trade Agreement country means Canada or Mexico.

North American Free Trade Agreement country end product means an article that--

(1) Is wholly the growth, product, or manufacture of a North American Free Trade Agreement (NAFTA) country; or

(2) In the case of an article that consists in whole or in part of materials from another country, has been substantially transformed in a NAFTA country into a new and different article of commerce with a name, character, or use distinct from that of the article or articles from which it was transformed. The term refers to a product offered for purchase under a supply contract, but for purposes of calculating the value of the end product includes services, (except transportation services) incidental to the article, provided that the value of those incidental services does not exceed that of the article itself.

United States means the 50 States, the District of Columbia, and outlying areas.

U.S.-made end product means an article that is mined, produced, or manufactured in the United States or that is substantially transformed in the United States into a new and different article of commerce with a name, character, or use distinct from that of the article or articles from which it was transformed.,

(b) Implementation. This clause implements the Trade, Agreements Act (19 U.S.C. 2501, et seq.) and the North American Free Trade Agreement Implementation Act of 1993, (NAFTA) (19 U.S.C. 3301 note), by restricting the acquisition of end products that are not U.S.-made, designated country, Caribbean Basin country, or NAFTA country end products.,

(c) Delivery of end products. The Contracting Officer has determined that the Trade Agreements Act and NAFTA apply to this acquisition. Unless otherwise specified, these trade agreements apply to all items in the Schedule. The Contractor shall deliver under this contract only U.S.-made, designated country, Caribbean Basin country, or NAFTA country end products except to the extent that, in its offer, it specified delivery of other end products in the provision entitled “Trade Agreements Certificate.”

(End of clause)

52.225-11 BUY AMERICAN ACT--CONSTRUCTION MATERIALS UNDER TRADE AGREEMENTS (JUN 2003)

(a) Definitions. As used in this clause--

Component means an article, material, or supply incorporated directly into a construction material.

Construction material means an article, material, or supply brought to the construction site by the Contractor or subcontractor for incorporation into the building or work. The term also includes an item brought to the site preassembled from articles, materials, or supplies. However, emergency life safety systems, such as emergency lighting, fire alarm, and audio evacuation systems, that are discrete systems incorporated into a public building or work and that are produced as complete systems, are evaluated as a single and distinct construction material regardless of when or how the individual parts or components of those systems are delivered to the construction site. Materials purchased directly by the Government are supplies, not construction material.

Cost of components means--

(1) For components purchased by the Contractor, the acquisition cost, including transportation costs to the place of incorporation into the construction material (whether or not such costs are paid to a domestic firm), and any applicable duty (whether or not a duty-free entry certificate is issued); or

(2) For components manufactured by the Contractor, all costs associated with the manufacture of the component, including transportation costs as described in paragraph (1) of this definition, plus allocable overhead costs, but excluding profit. Cost of components does not include any costs associated with the manufacture of the end product.

Designated country means any of the following countries: Aruba, Austria, Bangladesh, Belgium, Benin, Bhutan, Botswana, Burkina Faso, Burundi, Canada, Cape Verde, Central African Republic, Chad, Comoros, Denmark.

Djibouti, Equatorial Guinea, Finland, France, Gambia, Germany, Greece, Guinea, Guinea-Bissau, Haiti, Hong Kong, Ireland, Israel, Italy, Japan.

Kiribati, Korea, Republic of, Lesotho, Liechtenstein, Luxembourg, Malawi, Maldives, Mali, Mozambique, Nepal, Netherlands, Niger, Norway, Portugal, Rwanda.

Sao Tome and Principe, Sierra Leone, Singapore, Somalia, Spain, Sweden, Switzerland, Tanzania U.R., Togo, Tuvalu, Uganda, United Kingdom, Vanuatu, Western Samoa, Yemen.

Designated country construction material means a construction material that--

(1) Is wholly the growth, product, or manufacture of a designated country; or

(2) In the case of a construction material that consists in whole or in part of materials from another country, has been substantially transformed in a designated country into a new and different construction material distinct from the materials from which it was transformed.

Domestic construction material means--

(1) An unmanufactured construction material mined or produced in the United States; or

(2) A construction material manufactured in the United States, if the cost of its components mined, produced, or manufactured in the United States exceeds 50 percent of the cost of all its components. Components of foreign origin of the same class or kind for which nonavailability determinations have been made are treated as domestic.

Foreign construction material means a construction material other than a domestic construction material.

North American Free Trade Agreement country means Canada or Mexico.

North American Free Trade Agreement country construction material means a construction material that--

(1) Is wholly the growth, product, or manufacture of a North American Free Trade Agreement (NAFTA) country; or

(2) In the case of a construction material that consists in whole or in part of materials from another country, has been substantially transformed in a NAFTA country into a new and different construction material distinct from the materials from which it was transformed.

United States means the 50 States, the District of Columbia, and outlying areas.

(b) Construction materials. (1) This clause implements the Buy American Act (41 U.S.C. 10a-10d) and the Balance of Payments Program by providing a preference for domestic construction material. In addition, the Contracting Officer has determined that the Trade Agreements Act and the North American Free Trade Agreement (NAFTA) apply to this acquisition. Therefore, the Buy American Act restrictions are waived for designated country and NAFTA country construction materials.

(2) The Contractor shall use only domestic, designated country, or NAFTA country construction material in performing this contract, except as provided in paragraphs (b)(3) and (b)(4) of this clause.

(3) The requirement in paragraph (b)(2) of this clause does not apply to the construction materials or components listed by the Government as follows: NONE

(4) The Contracting Officer may add other foreign construction material to the list in paragraph (b)(3) of this clause if the Government determines that--

(i) The cost of domestic construction material would be unreasonable. The cost of a particular domestic construction material subject to the restrictions of the Buy American Act is unreasonable when the cost of such material exceeds the cost of foreign material by more than 6 percent;

(ii) The application of the restriction of the Buy American Act to a particular construction material would be impracticable or inconsistent with the public interest; or

(iii) The construction material is not mined, produced, or manufactured in the United States in sufficient and reasonably available commercial quantities of a satisfactory quality.

(c) Request for determination of inapplicability of the Buy American Act.

(1)(i) Any Contractor request to use foreign construction material in accordance with paragraph (b)(4) of this clause shall include adequate information for Government evaluation of the request, including--

(A) A description of the foreign and domestic construction materials;

(B) Unit of measure;

(C) Quantity;

(D) Price;

(E) Time of delivery or availability;

(F) Location of the construction project;

(G) Name and address of the proposed supplier; and

(H) A detailed justification of the reason for use of foreign construction materials cited in accordance with paragraph (b)(3) of this clause.

(ii) A request based on unreasonable cost shall include a reasonable survey of the market and a completed price comparison table in the format in paragraph (d) of this clause.

(iii) The price of construction material shall include all delivery costs to the construction site and any applicable duty (whether or not a duty-free certificate may be issued).

(iv) Any Contractor request for a determination submitted after contract award shall explain why the Contractor could not reasonably foresee the need for such determination and could not have requested the determination before contract award. If the Contractor does not submit a satisfactory explanation, the Contracting Officer need not make a determination.

(2) If the Government determines after contract award that an exception to the Buy American Act applies and the Contracting Officer and the Contractor negotiate adequate consideration, the Contracting Officer will modify the contract to allow use of the foreign construction material. However, when the basis for the exception is the unreasonable price of a domestic construction material, adequate consideration is not less than the differential established in paragraph (b)(4)(i) of this clause.

(3) Unless the Government determines that an exception to the Buy American Act applies, use of foreign construction material is noncompliant with the Buy American Act.

(d) Data. To permit evaluation of requests under paragraph (c) of this clause based on unreasonable cost, the Contractor shall include the following information and any applicable supporting data based on the survey of suppliers:

Foreign and Domestic Construction Materials Price Comparison

Construction material description	Unit of measure	Quantity	Price (dollars) \1\
Item 1:			
Foreign construction material....	.....	.....	.....
Domestic construction material...	.....	.....	.....
Item 2:			
Foreign construction material....	.....	.....	.....
Domestic construction material...	.....	.....	.....

\1\ Include all delivery costs to the construction site and any applicable duty (whether or not a duty-free entry certificate is issued).
List name, address, telephone number, and contact for suppliers surveyed. Attach copy of response; if oral, attach summary.
Include other applicable supporting information.

(End of clause)

52.225-13 RESTRICTIONS ON CERTAIN FOREIGN PURCHASES (JAN 2004)

(a) Except as authorized by the Office of Foreign Assets Control (OFAC) in the Department of the Treasury, the Contractor shall not acquire, for use in the performance of this contract, any supplies or services if any proclamation, Executive order, or statute administered by OFAC, or if OFAC's implementing regulations at 31 CFR chapter V, would prohibit such a transaction by a person subject to the jurisdiction of the United States.

(b) Except as authorized by OFAC, most transactions involving Cuba, Iran, Libya, and Sudan are prohibited, as are most imports from North Korea, into the United States or its outlying areas. Lists of entities and individuals subject to economic sanctions are included in OFAC's List of Specially Designated Nationals and Blocked Persons at TerList1.html. More information about these restrictions, as well as updates, is available in the OFAC's regulations at 31 CFR chapter V and/or on OFAC's Web site at http://www.treas.gov/ofac.

(c) The Contractor shall insert this clause, including this paragraph (c), in all subcontracts.

(End of clause)

52.227-1 AUTHORIZATION AND CONSENT (JUL 1995)

(a) The Government authorizes and consents to all use and manufacture, in performing this contract or any subcontract at any tier, of any invention described in and covered by a United States patent (1) embodied in the structure or composition of any article the delivery of which is accepted by the Government under this contract or (2) used in machinery, tools, or methods whose use necessarily results from compliance by the Contractor or a subcontractor with (i) specifications or written provisions forming a part of this contract or (ii) specific written instructions given by the Contracting Officer directing the manner of performance. The entire liability to the Government for infringement of a patent of the United States shall be determined solely by the provisions of the indemnity clause, if any, included in this contract or any subcontract hereunder (including any lower-tier subcontract), and the Government assumes liability for all other infringement to the extent of the authorization and consent hereinabove granted.

(b) The Contractor agrees to include, and require inclusion of, this clause, suitably modified to identify the parties, in all subcontracts at any tier for supplies or services (including construction, architect-engineer services, and materials, supplies, models, samples, and design or testing services expected to exceed the simplified acquisition threshold (however, omission of this clause from any subcontract, including those at or below the simplified acquisition threshold, does not affect this authorization and consent.)

(End of clause)

52.227-2 NOTICE AND ASSISTANCE REGARDING PATENT AND COPYRIGHT INFRINGEMENT (AUG 1996)

(a) The Contractor shall report to the Contracting Officer, promptly and in reasonable written detail, each notice or claim of patent or copyright infringement based on the performance of this contract of which the Contractor has knowledge.

(b) In the event of any claim or suit against the Government on account of any alleged patent or copyright infringement arising out of the performance of this contract or out of the use of any supplies furnished or work or services performed under this contract, the Contractor shall furnish to the Government, when requested by the Contracting Officer, all evidence and information in possession of the Contractor pertaining to such suit or claim. Such evidence and information shall be furnished at the expense of the Government except where the Contractor has agreed to indemnify the Government.

(c) The Contractor agrees to include, and require inclusion of, this clause in all subcontracts at any tier for supplies or services (including construction and architect-engineer subcontracts and those for material, supplies, models, samples, or design or testing services) expected to exceed the simplified acquisition threshold at (FAR) 2.101.to exceed the dollar amount set forth in 13.000 of the Federal Acquisition Regulation (FAR).

(End of clause)

52.227-4 PATENT INDEMNITY--CONSTRUCTION CONTRACTS (APR 1984)

Except as otherwise provided, the Contractor agrees to indemnify the Government and its officers, agents, and employees against liability, including costs and expenses, for infringement upon any United States patent (except a patent issued upon an application that is now or may hereafter be withheld from issue pursuant to a Secrecy Order under 35 U.S.C. 181) arising out of performing this contract or out of the use or disposal by or for the account of the Government of supplies furnished or work performed under this contract.

(End of clause)

52.228-1 BID GUARANTEE (SEP 1996)

(a) Failure to furnish a bid guarantee in the proper form and amount, by the time set for opening of bids, may be cause for rejection of the bid.

(b) The bidder shall furnish a bid guarantee in the form of a firm commitment, e.g., bid bond supported by good and sufficient surety or sureties acceptable to the Government, postal money order, certified check, cashier's check, irrevocable letter of credit, or, under Treasury Department regulations, certain bonds or notes of the United States. The Contracting Officer will return bid guarantees, other than bid bonds, (1) to unsuccessful bidders as soon as practicable after the opening of bids, and (2) to the successful bidder upon execution of contractual documents and bonds (including any necessary coinsurance or reinsurance agreements), as required by the bid as accepted.-

(c) The amount of the bid guarantee shall be (20%) twenty percent of the bid price or $3 million, whichever is less.-

(d) If the successful bidder, upon acceptance of its bid by the Government within the period specified for acceptance, fails to execute all contractual documents or furnish executed bond(s) within 10 days after receipt of the forms by the bidder, the Contracting Officer may terminate the contract for default.-

(e) In the event the contract is terminated for default, the bidder is liable for any cost of acquiring the work that exceeds the amount of its bid, and the bid guarantee is available to offset the difference.

(End of clause)

52.228-2 ADDITIONAL BOND SECURITY (OCT 1997)

The Contractor shall promptly furnish additional security required to protect the Government and persons supplying labor or materials under this contract if--

(a) Any surety upon any bond, or issuing financial institution for other security, furnished with this contract becomes unacceptable to the Government.

(b) Any surety fails to furnish reports on its financial condition as required by the Government;

(c) The contract price is increased so that the penal sum of any bond becomes inadequate in the opinion of the Contracting Officer; or

(d) An irrevocable letter of credit (ILC) used as security will expire before the end of the period of required security. If the Contractor does not furnish an acceptable extension or replacement ILC, or other acceptable substitute, at least 30 days before an ILC's scheduled expiration, the Contracting officer has the right to immediately draw on the ILC.

(End of clause)

52.228-5 INSURANCE--WORK ON A GOVERNMENT INSTALLATION (JAN 1997)

(a) The Contractor shall, at its own expense, provide and maintain during the entire performance of this contract, at least the kinds and minimum amounts of insurance required in the Schedule or elsewhere in the contract.

(b) Before commencing work under this contract, the Contractor shall notify the Contracting Officer in writing that the required insurance has been obtained. The policies evidencing required insurance shall contain an endorsement to the effect that any cancellation or any material change adversely affecting the Government's interest shall not be effective (1) for such period as the laws of the State in which this contract is to be performed prescribe, or (2) until 30 days after the insurer or the Contractor gives written notice to the Contracting Officer, whichever period is longer.

(c) The Contractor shall insert the substance of this clause, including this paragraph (c), in subcontracts under this contract that require work on a Government installation and shall require subcontractors to provide and maintain the insurance required in the Schedule or elsewhere in the contract. The Contractor shall maintain a copy of all subcontractors' proofs of required insurance, and shall make copies available to the Contracting Officer upon request.

(End of clause)

52.228-11 PLEDGES OF ASSETS (FEB 1992)

(a) Offerors shall obtain from each person acting as an individual surety on a bid guarantee, a performance bond, or a payment bond--

(1) Pledge of assets; and

(2) Standard Form 28, Affidavit of Individual Surety.

(b) Pledges of assets from each person acting as an individual surety shall be in the form of--

(1) Evidence of an escrow account containing cash, certificates of deposit, commercial or Government securities, or other assets described in FAR 28.203-2 (except see 28.203-2(b)(2) with respect to Government securities held in book entry form) and/or;

(2) A recorded lien on real estate. The offeror will be required to provide--

(i) Evidence of title in the form of a certificate of title prepared by a title insurance company approved by the United States Department of Justice. This title evidence must show fee simple title vested in the surety along with any concurrent owners; whether any real estate taxes are due and payable; and any recorded encumbrances against the property, including the lien filed in favor of the Government as required by FAR 28.203-3(d);

(ii) Evidence of the amount due under any encumbrance shown in the evidence of title;

(iii) A copy of the current real estate tax assessment of the property or a current appraisal dated no earlier than 6 months prior to the date of the bond, prepared by a professional appraiser who certifies that the appraisal has been conducted in accordance with the generally accepted appraisal standards as reflected in the Uniform Standards of Professional Appraisal Practice, as promulgated by the Appraisal Foundation.

(End of clause)

52.228-12 PROSPECTIVE SUBCONTRACTOR REQUESTS FOR BONDS. (OCT 1995)

In accordance with Section 806(a)(3) of Pub. L. 102-190, as amended by Sections 2091 and 8105 of Pub. L. 103-355, upon the request of a prospective subcontractor or supplier offering to furnish labor or material for the performance of this contract for which a payment bond has been furnished to the Government pursuant to the Miller Act, the Contractor shall promptly provide a copy of such payment bond to the requester.

(End of clause)

52.228-14 IRREVOCABLE LETTER OF CREDIT (DEC 1999)

(a) “Irrevocable letter of credit” (ILC), as used in this clause, means a written commitment by a federally insured financial institution to pay all or part of a stated amount of money, until the expiration date of the letter, upon presentation by the Government (the beneficiary) of a written demand therefor. Neither the financial institution nor the offeror/Contractor can revoke or condition the letter of credit.

(b) If the offeror intends to use an ILC in lieu of a bid bond, or to secure other types of bonds such as performance and payment bonds, the letter of credit and letter of confirmation formats in paragraphs (e) and (f) of this clause shall be used.

(c) The letter of credit shall be irrevocable, shall require presentation of no document other than a written demand and the ILC (including confirming letter, if any), shall be issued/confirmed by an acceptable federally insured financial institution as provided in paragraph (d) of this clause, and--

(1) If used as a bid guarantee, the ILC shall expire no earlier than 60 days after the close of the bid acceptance period;

(2) If used as an alternative to corporate or individual sureties as security for a performance or payment bond, the offeror/Contractor may submit an ILC with an initial expiration date estimated to cover the entire period for which financial security is required or may submit an ILC with an initial expiration date that is a minimum period of one year from the date of issuance. The ILC shall provide that, unless the issuer provides the beneficiary written notice of non-renewal at least 60 days in advance of the current expiration date, the ILC is automatically extended without amendment for one year from the expiration date, or any future expiration date, until the period of required coverage is completed and the Contracting Officer provides the financial institution with a written statement waiving the right to payment. The period of required coverage shall be:

(i) For contracts subject to the Miller Act, the later of--

(A) One year following the expected date of final payment;

(B) For performance bonds only, until completion of any warranty period; or

(C) For payment bonds only, until resolution of all claims filed against the payment bond during the one-year period following final payment.

(ii) For contracts not subject to the Miller Act, the later of--

(A) 90 days following final payment; or

(B) For performance bonds only, until completion of any warranty period.

(d) Only federally insured financial institutions rated investment grade or higher shall issue or confirm the ILC. The offeror/Contractor shall provide the Contracting Officer a credit rating that indicates the financial institution has the required rating(s) as of the date of issuance of the ILC. Unless the financial institution issuing the ILC had letter of credit business of less than $25 million in the past year, ILCs over $5 million must be confirmed by another acceptable financial institution that had letter of credit business of less than $25 million in the past year.

(e) The following format shall be used by the issuing financial institution to create an ILC:

_____

[Issuing Financial Institution's Letterhead or Name and Address]

Issue Date _____

IRREVOCABLE LETTER OF CREDIT NO. _____

Account party's name _____

Account party's address _____

For Solicitation No. _____(for reference only)

TO: [U.S. Government agency]

[U.S. Government agency's address]

1. We hereby establish this irrevocable and transferable Letter of Credit in your favor for one or more drawings up to United States $_____. This Letter of Credit is payable at [issuing financial institution's and, if any, confirming financial institution's] office at [issuing financial institution's address and, if any, confirming financial institution's address] and expires with our close of business on _____, or any automatically extended expiration date.

2. We hereby undertake to honor your or the transferee's sight draft(s) drawn on the issuing or, if any, the confirming financial institution, for all or any part of this credit if presented with this Letter of Credit and confirmation, if any, at the office specified in paragraph 1 of this Letter of Credit on or before the expiration date or any automatically extended expiration date.

3. [This paragraph is omitted if used as a bid guarantee, and subsequent paragraphs are renumbered.] It is a condition of this Letter of Credit that it is deemed to be automatically extended without amendment for one year from the expiration date hereof, or any future expiration date, unless at least 60 days prior to any expiration date, we notify you or the transferee by registered mail, or other receipted means of delivery, that we elect not to consider this Letter of Credit renewed for any such additional period. At the time we notify you, we also agree to notify the account party (and confirming financial institution, if any) by the same means of delivery.

4. This Letter of Credit is transferable. Transfers and assignments of proceeds are to be effected without charge to either the beneficiary or the transferee/assignee of proceeds. Such transfer or assignment shall be only at the written direction of the Government (the beneficiary) in a form satisfactory to the issuing financial institution and the confirming financial institution, if any.

5. This Letter of Credit is subject to the Uniform Customs and Practice (UCP) for Documentary Credits, 1993 Revision, International Chamber of Commerce Publication No. 500, and to the extent not inconsistent therewith, to the laws of _____ [state of confirming financial institution, if any, otherwise state of issuing financial institution].

6. If this credit expires during an interruption of business of this financial institution as described in Article 17 of the UCP, the financial institution specifically agrees to effect payment if this credit is drawn against within 30 days after the resumption of our business.

Sincerely,

_____

[Issuing financial institution]

(f) The following format shall be used by the financial institution to confirm an ILC:

_____
[Confirming Financial Institution's Letterhead or Name and Address]

(Date) _____

Our Letter of Credit Advice Number _____

Beneficiary: _____ [U.S. Government agency]

Issuing Financial Institution: _____

Issuing Financial Institution's LC No.: _____

Gentlemen:

1. We hereby confirm the above indicated Letter of Credit, the original of which is attached, issued by _____ [name of issuing financial institution] for drawings of up to United States dollars _____/U.S. $_____ and expiring with our close of business on _____ [the expiration date], or any automatically extended expiration date.

2. Draft(s) drawn under the Letter of Credit and this Confirmation are payable at our office located at _____.

3. We hereby undertake to honor sight draft(s) drawn under and presented with the Letter of Credit and this Confirmation at our offices as specified herein.

4. [This paragraph is omitted if used as a bid guarantee, and subsequent paragraphs are renumbered.] It is a condition of this confirmation that it be deemed automatically extended without amendment for one year from the expiration date hereof, or any automatically extended expiration date, unless:

(a) At least 60 days prior to any such expiration date, we shall notify the Contracting Officer, or the transferee and the issuing financial institution, by registered mail or other receipted means of delivery, that we elect not to consider this confirmation extended for any such additional period; or

(b) The issuing financial institution shall have exercised its right to notify you or the transferee, the account party, and ourselves, of its election not to extend the expiration date of the Letter of Credit.

5. This confirmation is subject to the Uniform Customs and Practice (UCP) for Documentary Credits, 1993 Revision, International Chamber of Commerce Publication No. 500, and to the extent not inconsistent therewith, to the laws of _____ [state of confirming financial institution].

6. If this confirmation expires during an interruption of business of this financial institution as described in Article

17 of the UCP, we specifically agree to effect payment if this credit is drawn against within 30 days after the resumption of our business.

Sincerely,

_____

[Confirming financial institution]

(g) The following format shall be used by the Contracting Officer for a sight draft to draw on the Letter of Credit:

SIGHT DRAFT

_____

[City, State]

(Date) _____

[Name and address of financial institution]

Pay to the order of _____ [Beneficiary Agency] _____ the sum of United States $_____.
This draft is drawn under Irrevocable Letter of Credit No. _____.

_____

[Beneficiary Agency]

By: _____

(End of clause)

52.228-15 PERFORMANCE AND PAYMENT BONDS--CONSTRUCTION (JUL 2000)-

(a) Definitions. As used in this clause--

Original contract price means the award price of the contract; or, for requirements contracts, the price payable for the estimated total quantity; or, for indefinite-quantity contracts, the price payable for the specified minimum quantity. Original contract price does not include the price of any options, except those options exercised at the time of contract award.

(b) Amount of required bonds. Unless the resulting contract price is $100,000 or less, the successful offeror shall furnish performance and payment bonds to the Contracting Officer as follows:

(1) Performance bonds (Standard Form 25). The penal amount of performance bonds at the time of contract award shall be 100 percent of the original contract price.

(2) Payment Bonds (Standard Form 25-A). The penal amount of payment bonds at the time of contract award shall be 100 percent of the original contract price.

(3) Additional bond protection. (i) The Government may require additional performance and payment bond protection if the contract price is increased. The increase in protection generally will equal 100 percent of the increase in contract price.

(ii) The Government may secure the additional protection by directing the Contractor to increase the penal amount of the existing bond or to obtain an additional bond.

(c) Furnishing executed bonds. The Contractor shall furnish all executed bonds, including any necessary reinsurance agreements, to the Contracting Officer, within the time period specified in the Bid Guarantee provision of the solicitation, or otherwise specified by the Contracting Officer, but in any event, before starting work.

(d) Surety or other security for bonds. The bonds shall be in the form of firm commitment, supported by corporate sureties whose names appear on the list contained in Treasury Department Circular 570, individual sureties, or by other acceptable security such as postal money order, certified check, cashier's check, irrevocable letter of credit, or, in accordance with Treasury Department regulations, certain bonds or notes of the United States. Treasury Circular 570 is published in the Federal Register or may be obtained from the U.S. Department of Treasury, Financial Management Service, Surety Bond Branch, 401 14th Street, NW, 2nd Floor, West Wing, Washington, DC 20227.

(e) Notice of subcontractor waiver of protection (40 U.S.C. 270b(c). Any waiver of the right to sue on the payment bond is void unless it is in writing, signed by the person whose right is waived, and executed after such person has first furnished labor or material for use in the performance of the contract.

(End of clause)

52.228-4005 BID PERFORMANCE AND PAYMENT BONDS.

Power of Attorney’s (POA) bearing mechanically-produced signatures are insufficient to evince a surety’s intent to be bound unless two conditions are met. First, mechanically-produced signatures must be expressly acknowledged as binding by the surety (usually evidenced by a statement in the POA itself to that effect). Second, such signatures must be applied subsequent to the generation of the document.

52.229-2 NORTH CAROLINA STATE AND LOCAL SALES AND USE TAX (APR 1984)

(a) "Materials," as used in this clause, means building materials, supplies, fixtures, and equipment that become a part of or are annexed to any building or structure erected, altered, or repaired under this contract.

(b) If this is a fixed-price contract, the contract price includes North Carolina State and local sales and use taxes to be paid on materials, notwithstanding any other provision of this contract. If this is a cost-reimbursement contract, any North Carolina State and local sales and use taxes paid by the Contractor on materials shall constitute an allowable cost under this contract.

(c) At the time specified in paragraph (d) below, the Contractor shall furnish the Contracting Officer certified statements setting forth the cost of the materials purchased from each vendor and the amount of North Carolina State and local sales and use taxes paid. In the event the Contractor makes several purchases from the same vendor, the certified statement shall indicate the invoice numbers, the inclusive dates of the invoices, the total amount of the invoices, and the North Carolina State and local sales and use taxes paid. The statement shall also include the cost of any tangible personal property withdrawn from the Contractor's warehouse stock and the amount of North Carolina State and local sales or use tax paid on this property by the Contractor. Any local sales or use taxes included in the Contractor's statements must be shown separately from the State sales or use taxes. The Contractor shall furnish any additional information the Commissioner of Revenue of the State of North Carolina may require to substantiate a refund claim for sales or use taxes. The Contractor shall also obtain and furnish to the Contracting Officer similar certified statements by its subcontractors.

(d) If this contract is completed before the next October 1, the certified statements to be furnished pursuant to paragraph (c) above shall be submitted within 60 days after completion. If this contract is not completed before the next October 1, the certified statements shall be submitted on or before November 30 of each year and shall cover taxes paid during the 12-month period that ended the preceding September 30.

(e) The certified statements to be furnished pursuant to paragraph (c) above shall be in the following form: I hereby certify that during the period . . . . to . . . .[insert dates], ... [insert name of Contractor or subcontractor] paid North Carolina State and local sales and use taxes aggregating $ . . . . (State) and $ . . . . (local), with respect to building materials, supplies, fixtures, and equipment that have become a part of or annexed to a building or structure erected, altered, or repaired by . . . . [insert name of Contractor or subcontractor] for the United States of America, and that the vendors from whom the property was purchased, the dates and numbers of the invoices covering the purchases, the total amount of the invoices of each vendor, the North Carolina State and local sales and use taxes paid on the property (shown separately), and the cost of property withdrawn from warehouse stock and North Carolina State and local sales or use taxes paid on this property are as set forth in the attachments.

(End of clause)

52.229-3 FEDERAL, STATE, AND LOCAL TAXES (APR 2003)

(a) As used in this clause--

"Contract date" means the date set for bid opening or, if this is a negotiated contract or a modification, the effective date of this contract or modification.

"All applicable Federal, State, and local taxes and duties" means all taxes and duties, in effect on the contract date, that the taxing authority is imposing and collecting on the transactions or property covered by this contract.

"After-imposed Federal tax" means any new or increased Federal excise tax or duty, or tax that was exempted or excluded on the contract date but whose exemption was later revoked or reduced during the contract period, on the transactions or property covered by this contract that the Contractor is required to pay or bear as the result of legislative, judicial, or administrative action taking effect after the contract date. It does not include social security tax or other employment taxes.

"After-relieved Federal tax" means any amount of Federal excise tax or duty, except social security or other employment taxes, that would otherwise have been payable on the transactions or property covered by this contract, but which the Contractor is not required to pay or bear, or for which the Contractor obtains a refund or drawback, as the result of legislative, judicial, or administrative action taking effect after the contract date.

Local taxes includes taxes imposed by a possession or territory of the United States, Puerto Rico, or the Northern Mariana Islands, if the contract is performed wholly or partly in any of those areas.

(b) The contract price includes all applicable Federal, State, and local taxes and duties.

(c) The contract price shall be increased by the amount of any after-imposed Federal tax, provided the Contractor warrants in writing that no amount for such newly imposed Federal excise tax or duty or rate increase was included in the contract price, as a contingency reserve or otherwise.

(d) The contract price shall be decreased by the amount of any after-relieved Federal tax.

(e) The contract price shall be decreased by the amount of any Federal excise tax or duty, except social security or other employment taxes, that the Contractor is required to pay or bear, or does not obtain a refund of, through the

Contractor's fault, negligence, or failure to follow instructions of the Contracting Officer.

(f) No adjustment shall be made in the contract price under this clause unless the amount of the adjustment exceeds $250.

(g) The Contractor shall promptly notify the Contracting Officer of all matters relating to any Federal excise tax or duty that reasonably may be expected to result in either an increase or decrease in the contract price and shall take appropriate action as the Contracting Officer directs.

(h) The Government shall, without liability, furnish evidence appropriate to establish exemption from any Federal, State, or local tax when the Contractor requests such evidence and a reasonable basis exists to sustain the exemption.

(End of clause)

52.232-5 PAYMENTS UNDER FIXED-PRICE CONSTRUCTION CONTRACTS (SEP 2002)

(a) Payment of price. The Government shall pay the Contractor the contract price as provided in this contract.

(b) Progress payments. The Government shall make progress payments monthly as the work proceeds, or at more frequent intervals as determined by the Contracting Officer, on estimates of work accomplished which meets the standards of quality established under the contract, as approved by the Contracting Officer.

(1) The Contractor's request for progress payments shall include the following substantiation:

(i) An itemization of the amounts requested, related to the various elements of work required by the contract covered by the payment requested.

(ii) A listing of the amount included for work performed by each subcontractor under the contract.

(iii) A listing of the total amount of each subcontract under the contract.

(iv) A listing of the amounts previously paid to each such subcontractor under the contract.

(v) Additional supporting data in a form and detail required by the Contracting Officer.

(2) In the preparation of estimates, the Contracting Officer may authorize material delivered on the site and preparatory work done to be taken into consideration. Material delivered to the Contractor at locations other than the site also may be taken into consideration if--

(i) Consideration is specifically authorized by this contract; and

(ii) The Contractor furnishes satisfactory evidence that it has acquired title to such material and that the material will be used to perform this contract.

(c) Contractor certification. Along with each request for progress payments, the Contractor shall furnish the following certification, or payment shall not be made: (However, if the Contractor elects to delete paragraph (c)(4) from the certification, the certification is still acceptable.)

I hereby certify, to the best of my knowledge and belief, that--

(1) The amounts requested are only for performance in accordance with the specifications, terms, and conditions of

the contract;

(2) All payments due to subcontractors and suppliers from previous payments received under the contract have been made, and timely payments will be made from the proceeds of the payment covered by this certification, in accordance with subcontract agreements and the requirements of chapter 39 of Title 31, United States Code;

(3) This request for progress payments does not include any amounts which the prime contractor intends to withhold or retain from a subcontractor or supplier in accordance with the terms and conditions of the subcontract; and

(4) This certification is not to be construed as final acceptance of a subcontractor's performance.

_____

(Name)

_____

(Title)

_____

(Date)

(d) Refund of unearned amounts. If the Contractor, after making a certified request for progress payments, discovers that a portion or all of such request constitutes a payment for performance by the Contractor that fails to conform to the specifications, terms, and conditions of this contract (hereinafter referred to as the "unearned amount"), the Contractor shall--

(1) Notify the Contracting Officer of such performance deficiency; and

(2) Be obligated to pay the Government an amount (computed by the Contracting Officer in the manner provided in paragraph (j) of this clause) equal to interest on the unearned amount from the 8th day after the date of receipt of the unearned amount until--

(i) The date the Contractor notifies the Contracting Officer that the performance deficiency has been corrected; or

(ii) The date the Contractor reduces the amount of any subsequent certified request for progress payments by an amount equal to the unearned amount.

(e) Retainage. If the Contracting Officer finds that satisfactory progress was achieved during any period for which a progress payment is to be made, the Contracting Officer shall authorize payment to be made in full. However, if satisfactory progress has not been made, the Contracting Officer may retain a maximum of 10 percent of the amount of the payment until satisfactory progress is achieved. When the work is substantially complete, the Contracting Officer may retain from previously withheld funds and future progress payments that amount the Contracting Officer considers adequate for protection of the Government and shall release to the Contractor all the remaining withheld funds. Also, on completion and acceptance of each separate building, public work, or other division of the contract, for which the price is stated separately in the contract, payment shall be made for the completed work without retention of a percentage.

(f) Title, liability, and reservation of rights. All material and work covered by progress payments made shall, at the time of payment, become the sole property of the Government, but this shall not be construed as--

(1) Relieving the Contractor from the sole responsibility for all material and work upon which payments have been made or the restoration of any damaged work; or

(2) Waiving the right of the Government to require the fulfillment of all of the terms of the contract.

(g) Reimbursement for bond premiums. In making these progress payments, the Government shall, upon request, reimburse the Contractor for the amount of premiums paid for performance and payment bonds (including coinsurance and reinsurance agreements, when applicable) after the Contractor has furnished evidence of full payment to the surety. The retainage provisions in paragraph (e) of this clause shall not apply to that portion of progress payments attributable to bond premiums.

(h) Final payment. The Government shall pay the amount due the Contractor under this contract after--

(1) Completion and acceptance of all work;

(2) Presentation of a properly executed voucher; and

(3) Presentation of release of all claims against
the Government arising by virtue of this contract, other than claims, in stated amounts, that the Contractor has specifically excepted from the operation of the release. A release may also be required of the assignee if the Contractor's claim to amounts payable under this contract has been assigned under the Assignment of Claims Act of 1940 (31 U.S.C. 3727 and 41 U.S.C. 15).

(i) Limitation because of undefinitized work. Notwithstanding any provision of this contract, progress payments shall not exceed 80 percent on work accomplished on undefinitized contract actions. A "contract action" is any action resulting in a contract, as defined in FAR Subpart 2.1, including contract modifications for additional supplies or services, but not including contract modifications that are within the scope and under the terms of the contract, such as contract modifications issued pursuant to the Changes clause, or funding and other administrative changes.

(j) Interest computation on unearned amounts. In accordance with 31 U.S.C. 3903(c)(1), the amount payable under subparagraph (d)(2) of this clause shall be--

(1) Computed at the rate of average bond equivalent rates of 91-day Treasury bills auctioned at the most recent auction of such bills prior to the date the Contractor receives the unearned amount; and

(2) Deducted from the next available payment to the Contractor.

(End of clause)

52.232-17 INTEREST (JUNE 1996)

(a) Except as otherwise provided in this contract under a Price Reduction for Defective Cost or Pricing Data clause or a Cost Accounting Standards clause, all amounts that become payable by the Contractor to the Government under this contract (net of any applicable tax credit under the Internal Revenue Code (26 U.S.C. 1481)) shall bear simple interest from the date due until paid unless paid within 30 days of becoming due. The interest rate shall be the interest rate established by the Secretary of the Treasury as provided in Section 12 of the Contract Disputes Act of 1978 (Public Law 95-563), which is applicable to the period in which the amount becomes due, as provided in paragraph (b) of this clause, and then at the rate applicable for each six-month period as fixed by the Secretary until the amount is paid. reproduce, prepare derivative works, distribute copies to the public, and (b) Amounts shall be due at the earliest of the following dates:

(1) The date fixed under this contract.

(2) The date of the first written demand for payment consistent with this contract, including any demand resulting from a default termination.

(3) The date the Government transmits to the Contractor a proposed supplemental agreement to confirm completed negotiations establishing the amount of debt.

(4) If this contract provides for revision of prices, the date of written notice to the Contractor stating the amount of refund payable in connection with a pricing proposal or a negotiated pricing agreement not confirmed by contract modification.

(c) The interest charge made under this clause may be reduced under the procedures prescribed in 32.614-2 of the Federal Acquisition Regulation in effect on the date of this contract.

(End of clause)

52.232-18 AVAILABILITY OF FUNDS (APR 1984)

Funds are not presently available for this contract. The Government's obligation under this contract is contingent upon the availability of appropriated funds from which payment for contract purposes can be made. No legal liability on the part of the Government for any payment may arise until funds are made available to the Contracting Officer for this contract and until the Contractor receives notice of such availability, to be confirmed in writing by the Contracting Officer.

(End of clause)

52.232-23 ASSIGNMENT OF CLAIMS (JAN 1986)

(a) The Contractor, under the Assignment of Claims Act, as amended, 31 U.S.C. 3727, 41 U.S.C. 15 (hereafter referred to as "the Act"), may assign its rights to be paid amounts due or to become due as a result of the performance of this contract to a bank, trust company, or other financing institution, including any Federal lending agency. The assignee under such an assignment may thereafter further assign or reassign its right under the original assignment to any type of financing institution described in the preceding sentence.

(b) Any assignment or reassignment authorized under the Act and this clause shall cover all unpaid amounts payable under this contract, and shall not be made to more than one party, except that an assignment or reassignment may be made to one party as agent or trustee for two or more parties participating in the financing of this contract.

(c) The Contractor shall not furnish or disclose to any assignee under this contract any classified document (including this contract) or information related to work under this contract until the Contracting Officer authorizes such action in writing.

(End of clause)

52.232-27 PROMPT PAYMENT FOR CONSTRUCTION CONTRACTS (OCT 2003)

Notwithstanding any other payment terms in this contract, the Government will make invoice payments under the terms and conditions specified in this clause. The Government considers payment as being made on the day a check is dated or the date of an electronic funds transfer. Definitions of pertinent terms are set forth in sections 2.101,

32.001, and 32.902 of the Federal Acquisition Regulation. All days referred to in this clause are calendar days, unless otherwise specified. (However, see paragraph (a)(3) concerning payments due on Saturdays, Sundays, and legal holidays.)

(a) Invoice payments--(1) Types of invoice payments. For purposes of this clause, there are several types of invoice payments that may occur under this contract, as follows:

(i) Progress payments, if provided for elsewhere in this contract, based on Contracting Officer approval of the estimated amount and value of work or services performed, including payments for reaching milestones in any project.

(A) The due date for making such payments is 14 days after the designated billing office receives a proper payment request. If the designated billing office fails to annotate the payment request with the actual date of receipt at the time of receipt, the payment due date is the 14th day after the date of the Contractor's payment request, provided the designated billing office receives a proper payment request and there is no disagreement over quantity, quality, or Contractor compliance with contract requirements.

(B) The due date for payment of any amounts retained by the Contracting Officer in accordance with the clause at 52.232-5, Payments Under Fixed-Price Construction Contracts, is as specified in the contract or, if not specified, 30 days after approval by the Contracting Officer for release to the Contractor.

(ii) Final payments based on completion and acceptance of all work and presentation of release of all claims against the Government arising by virtue of the contract, and payments for partial deliveries that have been accepted by the Government (e.g., each separate building, public work, or other division of the contract for which the price is stated separately in the contract).

(A) The due date for making such payments is the later of the following two events:

(1) The 30th day after the designated billing office receives a proper invoice from the Contractor.

(2) The 30th day after Government acceptance of the work or services completed by the Contractor. For a final invoice when the payment amount is subject to contract settlement actions (e.g., release of claims), acceptance is deemed to occur on the effective date of the contract settlement.

(B) If the designated billing office fails to annotate the invoice with the date of actual receipt at the time of receipt, the invoice payment due date is the 30th day after the date of the Contractor's invoice, provided the designated billing office receives a proper invoice and there is no disagreement over quantity, quality, or Contractor compliance with contract requirements.

(2) Contractor's invoice. The Contractor shall prepare and submit invoices to the designated billing office specified in the contract. A proper invoice must include the items listed in paragraphs (a)(2)(i) through (a)(2)(xi) of this clause. If the invoice does not comply with these requirements, the designated billing office must return it within 7 days after receipt, with the reasons why it is not a proper invoice. When computing any interest penalty owed the Contractor, the Government will take into account if the Government notifies the Contractor of an improper invoice in an untimely manner.

(i) Name and address of the Contractor.

(ii) Invoice date and invoice number. (The Contractor should date invoices as close as possible to the date of mailing or transmission.)

(iii) Contract number or other authorization for work or services performed (including order number and contract line item number).

(iv) Description of work or services performed.

(v) Delivery and payment terms (e.g., discount for prompt payment terms).

(vi) Name and address of Contractor official to whom payment is to be sent (must be the same as that in the contract or in a proper notice of assignment).

(vii) Name (where practicable), title, phone number, and mailing address of person to notify in the event of a defective invoice.

(viii) For payments described in paragraph (a)(1)(i) of this clause, substantiation of the amounts requested and certification in accordance with the requirements of the clause at 52.232-5, Payments Under Fixed-Price Construction Contracts.

(ix) Taxpayer Identification Number (TIN). The Contractor shall include its TIN on the invoice only if required elsewhere in this contract.

(x) Electronic funds transfer (EFT) banking information.

(A) The Contractor shall include EFT banking information on the invoice only if required elsewhere in this contract.

(B) If EFT banking information is not required to be on the invoice, in order for the invoice to be a proper invoice, the Contractor shall have submitted correct EFT banking information in accordance with the applicable solicitation provision (e.g., 52.232-38, Submission of Electronic Funds Transfer Information with Offer), contract clause (e.g., 52.232-33, Payment by Electronic Funds Transfer--Central Contractor Registration, or 52.232-34, Payment by Electronic Funds Transfer--Other Than Central Contractor Registration), or applicable agency procedures.

(C) EFT banking information is not required if the Government waived the requirement to pay by EFT.

(xi) Any other information or documentation required by the contract.

(3) Interest penalty. The designated payment office will pay an interest penalty automatically, without request from the Contractor, if payment is not made by the due date and the conditions listed in paragraphs (a)(3)(i) through (a)(3)(iii) of this clause are met, if applicable. However, when the due date falls on a Saturday, Sunday, or legal holiday, the designated payment office may make payment on the following working day without incurring a late payment interest penalty.

(i) The designated billing office received a proper invoice.

(ii) The Government processed a receiving report or other Government documentation authorizing payment and there was no disagreement over quantity, quality, Contractor compliance with any contract term or condition, or requested progress payment amount.

(iii) In the case of a final invoice for any balance of funds due the Contractor for work or services performed, the amount was not subject to further contract settlement actions between the Government and the Contractor.

(4) Computing penalty amount. The Government will compute the interest penalty in accordance with the Office of Management and Budget prompt payment regulations at 5 CFR part 1315.

(i) For the sole purpose of computing an interest penalty that might be due the Contractor for payments described in paragraph (a)(1)(ii) of this clause, Government acceptance or approval is deemed to occur constructively on the 7th day after the Contractor has completed the work or services in accordance with the terms and conditions of the contract. If actual acceptance or approval occurs within the constructive acceptance or approval period, the Government will base the determination of an interest penalty on the actual date of acceptance or approval.

Constructive acceptance or constructive approval requirements do not apply if there is a disagreement over quantity, quality, or Contractor compliance with a contract provision. These requirements also do not compel Government officials to accept work or services, approve Contractor estimates, perform contract administration functions, or make payment prior to fulfilling their responsibilities.

(ii) The prompt payment regulations at 5 CFR 1315.10(c) do not require the Government to pay interest penalties if payment delays are due to disagreement between the Government and the Contractor over the payment amount or other issues involving contract compliance, or on amounts temporarily withheld or retained in accordance with the terms of the contract. The Government and the Contractor shall resolve claims involving disputes, and any interest that may be payable in accordance with the clause at FAR 52.233-1, Disputes.

(5) Discounts for prompt payment. The designated payment office will pay an interest penalty automatically, without request from the Contractor, if the Government takes a discount for prompt payment improperly. The Government will calculate the interest penalty in accordance with the prompt payment regulations at 5 CFR part 1315.

(6) Additional interest penalty. (i) The designated payment office will pay a penalty amount, calculated in accordance with the prompt payment regulations at 5 CFR part 1315 in addition to the interest penalty amount only if--

(A) The Government owes an interest penalty of $1 or more;

(B) The designated payment office does not pay the interest penalty within 10 days after the date the invoice amount is paid; and

(C) The Contractor makes a written demand to the designated payment office for additional penalty payment, in accordance with paragraph (a)(6)(ii) of this clause, postmarked not later than 40 days after the date the invoice amount is paid.

(ii)(A) The Contractor shall support written demands for additional penalty payments with the following data. The Government will not request any additional data. The Contractor shall--

(1) Specifically assert that late payment interest is due under a specific invoice, and request payment of all overdue late payment interest penalty and such additional penalty as may be required;

(2) Attach a copy of the invoice on which the unpaid late payment interest was due; and

(3) State that payment of the principal has been received, including the date of receipt.

(B) If there is no postmark or the postmark is illegible--

(1) The designated payment office that receives the demand will annotate it with the date of receipt provided the demand is received on or before the 40th day after payment was made; or

(2) If the designated payment office fails to make the required annotation, the Government will determine the demand's validity based on the date the Contractor has placed on the demand, provided such date is no later than the 40th day after payment was made.

(b) Contract financing payments. If this contract provides for contract financing, the Government will make contract financing payments in accordance with the applicable contract financing clause.

(c) Subcontract clause requirements. The Contractor shall include in each subcontract for property or services (including a material supplier) for the purpose of performing this contract the following:

(1) Prompt payment for subcontractors. A payment clause that obligates the Contractor to pay the subcontractor for satisfactory performance under its subcontract not later than 7 days from receipt of payment out of such amounts as are paid to the Contractor under this contract.

(2) Interest for subcontractors. An interest penalty clause that obligates the Contractor to pay to the subcontractor an interest penalty for each payment not made in accordance with the payment clause--

(i) For the period beginning on the day after the required payment date and ending on the date on which payment of the amount due is made; and

(ii) Computed at the rate of interest established by the Secretary of the Treasury, and published in the Federal Register, for interest payments under section 12 of the Contract Disputes Act of 1978 (41 U.S.C. 611) in effect at the time the Contractor accrues the obligation to pay an interest penalty.

(3) Subcontractor clause flowdown. A clause requiring each subcontractor to use:

(i) Include a payment clause and an interest penalty clause conforming to the standards set forth in paragraphs (c)(1) and (c)(2) of this clause in each of its subcontracts; and

(ii) Require each of its subcontractors to include such clauses in their subcontracts with each lower-tier subcontractor or supplier.

(d) Subcontract clause interpretation. The clauses required by paragraph (c) of this clause shall not be construed to impair the right of the Contractor or a subcontractor at any tier to negotiate, and to include in their subcontract, provisions that--

(1) Retainage permitted. Permit the Contractor or a subcontractor to retain (without cause) a specified percentage of each progress payment otherwise due to a subcontractor for satisfactory performance under the subcontract without incurring any obligation to pay a late payment interest penalty, in accordance with terms and conditions agreed to by the parties to the subcontract, giving such recognition as the parties deem appropriate to the ability of a subcontractor to furnish a performance bond and a payment bond;

(2) Withholding permitted. Permit the Contractor or subcontractor to make a determination that part or all of the subcontractor's request for payment may be withheld in accordance with the subcontract agreement; and

(3) Withholding requirements. Permit such withholding without incurring any obligation to pay a late payment penalty if--

(i) A notice conforming to the standards of paragraph (g) of this clause previously has been furnished to the subcontractor; and

(ii) The Contractor furnishes to the Contracting Officer a copy of any notice issued by a Contractor pursuant to paragraph (d)(3)(i) of this clause.

(e) Subcontractor withholding procedures. If a Contractor, after making a request for payment to the Government but before making a payment to a subcontractor for the subcontractor's performance covered by the payment request, discovers that all or a portion of the payment otherwise due such subcontractor is subject to withholding from the subcontractor in accordance with the subcontract agreement, then the Contractor shall--

(1) Subcontractor notice. Furnish to the subcontractor a notice conforming to the standards of paragraph (g) of this clause as soon as practicable upon ascertaining the cause giving rise to a withholding, but prior to the due date for subcontractor payment;

(2) Contracting Officer notice. Furnish to the Contracting Officer, as soon as practicable, a copy of the notice furnished to the subcontractor pursuant to paragraph (e)(1) of this clause;

(3) Subcontractor progress payment reduction. Reduce the subcontractor's progress payment by an amount not to exceed the amount specified in the notice of withholding furnished under paragraph (e)(1) of this clause;

(4) Subsequent subcontractor payment. Pay the subcontractor as soon as practicable after the correction of the identified subcontract performance deficiency, and--

(i) Make such payment within--

(A) Seven days after correction of the identified subcontract performance deficiency (unless the funds therefor must be recovered from the Government because of a reduction under paragraph
(e)(5)(i)) of this clause; or

(B) Seven days after the Contractor recovers such funds from the Government; or

(ii) Incur an obligation to pay a late payment interest penalty computed at the rate of interest established by the Secretary of the Treasury, and published in the Federal Register, for interest payments under section 12 of the Contracts Disputes Act of 1978 (41 U.S.C. 611) in effect at the time the Contractor accrues the obligation to pay an interest penalty;

(5) Notice to Contracting Officer. Notify the Contracting Officer upon--

(i) Reduction of the amount of any subsequent certified application for payment; or

(ii) Payment to the subcontractor of any withheld amounts of a progress payment, specifying--

(A) The amounts withheld under paragraph (e)(1) of this clause; and

(B) The dates that such withholding began and ended; and

(6) Interest to Government. Be obligated to pay to the Government an amount equal to interest on the withheld payments (computed in the manner provided in 31 U.S.C. 3903(c)(1)), from the 8th day after receipt of the withheld amounts from the Government until--

(i) The day the identified subcontractor performance deficiency is corrected; or

(ii) The date that any subsequent payment is reduced under paragraph (e)(5)(i) of this clause.

(f) Third-party deficiency reports--(1) Withholding from subcontractor. If a Contractor, after making payment to a first-tier subcontractor, receives from a supplier or subcontractor of the first-tier subcontractor (hereafter referred to as a “second-tier subcontractor”) a written notice in accordance with section 2 of the Act of August 24, 1935 (40 U.S.C. 270b, Miller Act), asserting a deficiency in such first-tier subcontractor's performance under the contract for which the Contractor may be ultimately liable, and the Contractor determines that all or a portion of future payments otherwise due such first-tier subcontractor is subject to withholding in accordance with the subcontract agreement, the Contractor may, without incurring an obligation to pay an interest penalty under paragraph (e)(6) of this clause--

(i) Furnish to the first-tier subcontractor a notice conforming to the standards of paragraph (g) of this clause as soon as practicable upon making such determination; and

(ii) Withhold from the first-tier subcontractor's next available progress payment or payments an amount not to exceed the amount specified in the notice of withholding furnished under paragraph (f)(1)(i) of this clause.

(2) Subsequent payment or interest charge. As soon as practicable, but not later than 7 days after receipt of satisfactory written notification that the identified subcontract performance deficiency has been corrected, the Contractor shall--

(i) Pay the amount withheld under paragraph (f)(1)(ii) of this clause to such first-tier subcontractor; or

(ii) Incur an obligation to pay a late payment interest penalty to such first-tier subcontractor computed at the rate of interest established by the Secretary of the Treasury, and published in the Federal Register, for interest payments under section 12 of the Contracts DisputesAct of 1978 (41 U.S.C. 611) in effect at the time the Contractor accrues the obligation to pay an interest penalty.

(g) Written notice of subcontractor withholding. The Contractor shall issue a written notice of any withholding to a subcontractor (with a copy furnished to the Contracting Officer), specifying--

(1) The amount to be withheld;

(2) The specific causes for the withholding under the terms of the subcontract; and

(3) The remedial actions to be taken by the subcontractor in order to receive payment of the amounts withheld.

(h) Subcontractor payment entitlement. The Contractor may not request payment from the Government of any amount withheld or retained in accordance with paragraph (d) of this clause until such time as the Contractor has determined and certified to the Contracting Officer that the subcontractor is entitled to the payment of such amount.

(i) Prime-subcontractor disputes. A dispute between the Contractor and subcontractor relating to the amount or entitlement of a subcontractor to a payment or a late payment interest penalty under a clause included in the subcontract pursuant to paragraph (c) of this clause does not constitute a dispute to which the Government is a party. The Government may not be interpleaded in any judicial or administrative proceeding involving such a dispute.

(j) Preservation of prime-subcontractor rights. Except as provided in paragraph (i) of this clause, this clause shall not limit or impair any contractual, administrative, or judicial remedies otherwise available to the Contractor or a subcontractor in the event of a dispute involving late payment or nonpayment by the Contractor or deficient subcontract performance or nonperformance by a subcontractor.

(k) Non-recourse for prime contractor interest penalty. The Contractor's obligation to pay an interest penalty to a subcontractor pursuant to the clauses included in a subcontract under paragraph (c) of this clause shall not be construed to be an obligation of the Government for such interest penalty. A cost-reimbursement claim may not include any amount for reimbursement of such interest penalty.

(l) Overpayments. If the Contractor becomes aware of a duplicate contract financing or invoice payment or that the Government has otherwise overpaid on a contract financing or invoice payment, the Contractor shall immediately notify the Contracting Officer and request instructions for disposition of the overpayment.

(End of clause)

52.232-33 PAYMENT BY ELECTRONIC FUNDS TRANSFER—CENTRAL CONTRACTOR REGISTRATION (OCT 2003)

(a) Method of payment. (1) All payments by the Government under this contract shall be made by electronic funds transfer (EFT), except as provided in paragraph (a)(2) of this clause. As used in this clause, the term “EFT” refers to the funds transfer and may also include the payment information transfer.

(2) In the event the Government is unable to release one or more payments by EFT, the Contractor agrees to either--

(i) Accept payment by check or some other mutually agreeable method of payment; or

(ii) Request the Government to extend the payment due date until such time as the Government can make payment by EFT (but see paragraph (d) of this clause).

(b) Contractor's EFT information. The Government shall make payment to the Contractor using the EFT information contained in the Central Contractor Registration (CCR) database. In the event that the EFT information changes, the Contractor shall be responsible for providing the updated information to the CCR database.

(c) Mechanisms for EFT payment. The Government may make payment by EFT through either the Automated Clearing House (ACH) network, subject to the rules of the National Automated Clearing House Association, or the Fedwire Transfer System. The rules governing Federal payments through the ACH are contained in 31 CFR part 210.

(d) Suspension of payment. If the Contractor's EFT information in the CCR database is incorrect, then the Government need not make payment to the Contractor under this contract until correct EFT information is entered into the CCR database; and any invoice or contract financing request shall be deemed not to be a proper invoice for the purpose of prompt payment under this contract. The prompt payment terms of the contract regarding notice of an improper invoice and delays in accrual of interest penalties apply.

(e) Liability for uncompleted or erroneous transfers. (1) If an uncompleted or erroneous transfer occurs because the Government used the Contractor's EFT information incorrectly, the Government remains responsible for--

(i) Making a correct payment;

(ii) Paying any prompt payment penalty due; and

(iii) Recovering any erroneously directed funds.

(2) If an uncompleted or erroneous transfer occurs because the Contractor's EFT information was incorrect, or was revised within 30 days of Government release of the EFT payment transaction instruction to the Federal Reserve System, and--

(i) If the funds are no longer under the control of the payment office, the Government is deemed to have made payment and the Contractor is responsible for recovery of any erroneously directed funds; or

(ii) If the funds remain under the control of the payment office, the Government shall not make payment, and the provisions of paragraph (d) of this clause shall apply.

(f) EFT and prompt payment. A payment shall be deemed to have been made in a timely manner in accordance with the prompt payment terms of this contract if, in the EFT payment transaction instruction released to the Federal Reserve System, the date specified for settlement of the payment is on or before the prompt payment due date, provided the specified payment date is a valid date under the rules of the Federal Reserve System.

(g) EFT and assignment of claims. If the Contractor assigns the proceeds of this contract as provided for in the assignment of claims terms of this contract, the Contractor shall require as a condition of any such assignment, that the assignee shall register separately in the CCR database and shall be paid by EFT in accordance with the terms of this clause. Notwithstanding any other requirement of this contract, payment to an ultimate recipient other than the

Contractor, or a financial institution properly recognized under an assignment of claims pursuant to subpart 32.8, is not permitted. In all respects, the requirements of this clause shall apply to the assignee as if it were the Contractor. EFT information that shows the ultimate recipient of the transfer to be other than the Contractor, in the absence of a proper assignment of claims acceptable to the Government, is incorrect EFT information within the meaning of paragraph (d) of this clause.

(h) Liability for change of EFT information by financial agent. The Government is not liable for errors resulting from changes to EFT information made by the Contractor's financial agent.

(i) Payment information. The payment or disbursing office shall forward to the Contractor available payment information that is suitable for transmission as of the date of release of the EFT instruction to the Federal Reserve System. The Government may request the Contractor to designate a desired format and method(s) for delivery of payment information from a list of formats and methods the payment office is capable of executing. However, the Government does not guarantee that any particular format or method of delivery is available at any particular payment office and retains the latitude to use the format and delivery method most convenient to the Government. If the Government makes payment by check in accordance with paragraph (a) of this clause, the Government shall mail the payment information to the remittance address contained in the CCR database.

(End of Clause)

52.233-1 DISPUTES. (JUL 2002)

(a) This contract is subject to the Contract Disputes Act of 1978, as amended (41 U.S.C. 601-613).

(b) Except as provided in the Act, all disputes arising under or relating to this contract shall be resolved under this clause.

(c) Claim, as used in this clause, means a written demand or written assertion by one of the contracting parties seeking, as a matter of right, the payment of money in a sum certain, the adjustment or interpretation of contract terms, or other relief arising under or relating to this contract. However, a written demand or written assertion by the Contractor seeking the payment of money exceeding $100,000 is not a claim under the Act until certified. A voucher, invoice, or other routine request for payment that is not in dispute when submitted is not a claim under the Act. The submission may be converted to a claim under the Act, by complying with the submission and certification requirements of this clause, if it is disputed either as to liability or amount or is not acted upon in a reasonable time.

(d)(1) A claim by the Contractor shall be made in writing and, unless otherwise stated in this contract, submitted within 6 years after accrual of the claim to the Contracting Officer for a written decision. A claim by the Government against the Contractor shall be subject to a written decision by the Contracting Officer.

(2)(i) The contractors shall provide the certification specified in subparagraph (d)(2)(iii) of this clause when submitting any claim -

(A) Exceeding $100,000; or

(B) Regardless of the amount claimed, when using -

(1) Arbitration conducted pursuant to 5 U.S.C. 575-580; or

(2) Any other alternative means of dispute resolution (ADR) technique that the agency elects to handle in accordance with the Administrative Dispute Resolution Act (ADRA).

(ii) The certification requirement does not apply to issues in controversy that have not been submitted as all or part

of a claim.

(iii) The certification shall state as follows: "I certify that the claim is made in good faith; that the supporting data are accurate and complete to the best of my knowledge and belief; that the amount requested accurately reflects the contract adjustment for which the Contractor believes the Government is liable; and that I am duly authorized to certify the claim on behalf of the Contractor.

(3) The certification may be executed by any person duly authorized to bind the Contractor with respect to the claim.

(e) For Contractor claims of $100,000 or less, the Contracting Officer must, if requested in writing by the Contractor, render a decision within 60 days of the request. For Contractor-certified claims over $100,000, the Contracting Officer must, within 60 days, decide the claim or notify the Contractor of the date by which the decision will be made.

(f) The Contracting Officer's decision shall be final unless the Contractor appeals or files a suit as provided in the Act.

(g) If the claim by the Contractor is submitted to the Contracting Officer or a claim by the Government is presented to the Contractor, the parties, by mutual consent, may agree to use alternative disput resolution (ADR). If the Contractor refuses an offer for ADR, the Contractor shall inform the Contracting Officer, in writing, of the Contractor's specific reasons for rejecting the request.

(h) The Government shall pay interest on the amount found due and unpaid from (1) the date the Contracting Officer receives the claim (certified, if required); or (2) the date that payment otherwise would be due, if that date is later, until the date of payment. With regard to claims having defective certifications, as defined in (FAR) 48 CFR 33.201, interest shall be paid from the date that the Contracting Officer initially receives the claim. Simple interest on claims shall be paid at the rate, fixed by the Secretary of the Treasury as provided in the Act, which is applicable to the period during which the Contracting Officer receives the claim and then at the rate applicable for each 6-month period as fixed by the Treasury Secretary during the pendency of the claim.

(i) The Contractor shall proceed diligently with performance of this contract, pending final resolution of any request for relief, claim, appeal, or action arising under the contract, and comply with any decision of the Contracting Officer.

(End of clause)

52.233-3 PROTEST AFTER AWARD (AUG. 1996)

(a) Upon receipt of a notice of protest (as defined in FAR 33.101) or a determination that a protest is likely (see FAR 33.102(d)), the Contracting Officer may, by written order to the Contractor, direct the Contractor to stop performance of the work called for by this contract. The order shall be specifically identified as a stop-work order issued under this clause. Upon receipt of the order, the Contractor shall immediately comply with its terms and take all reasonable steps to minimize the incurrence of costs allocable to the work covered by the order during the period of work stoppage. Upon receipt of the final decision in the protest, the Contracting Officer shall either--

(1) Cancel the stop-work order; or

(2) Terminate the work covered by the order as provided in the Default, or the Termination for Convenience of the Government, clause of this contract.

(b) If a stop-work order issued under this clause is canceled either before or after a final decision in the protest, the

Contractor shall resume work. The Contracting Officer shall make an equitable adjustment in the delivery schedule or contract price, or both, and the contract shall be modified, in writing, accordingly, if--

(1) The stop-work order results in an increase in the time required for, or in the Contractor's cost properly allocable to, the performance of any part of this contract; and

(2) The Contractor asserts its right to an adjustment within 30 days after the end of the period of work stoppage; provided, that if the Contracting Officer decides the facts justify the action, the Contracting Officer may receive and act upon a proposal at any time before final payment under this contract.

(c) If a stop-work order is not canceled and the work covered by the order is terminated for the convenience of the Government, the Contracting Officer shall allow reasonable costs resulting from the stop-work order in arriving at the termination settlement.

(d) If a stop-work order is not canceled and the work covered by the order is terminated for default, the Contracting Officer shall allow, by equitable adjustment or otherwise, reasonable costs resulting from the stop-work order.

(e) The Government's rights to terminate this contract at any time are not affected by action taken under this clause.

(f) If, as the result of the Contractor's intentional or negligent misstatement, misrepresentation, or miscertification, a protest related to this contract is sustained, and the Government pays costs, as provided in FAR 33.102(b)(2) or 33.104(h)(1), the Government may require the Contractor to reimburse the Government the amount of such costs. In addition to any other remedy available, and pursuant to the requirements of Subpart 32.6, the Government may collect this debt by offsetting the amount against any payment due the Contractor under any contract between the Contractor and the Government.

(End of clause)

52.236-2 DIFFERING SITE CONDITIONS (APR 1984)

As prescribed in 36.502, insert the following clause in solicitations and contracts when a fixed-price construction contract or a fixed-price dismantling, demolition, or removal of improvements contract is contemplated and the contract amount is expected to exceed the small purchase limitation. The Contracting Officer may insert the clause in solicitations and contracts when a fixed-price construction or a fixed-price contract for dismantling, demolition, or removal of improvements is contemplated and the contract amount is expected to be within the small purchase limitation.

(a) The Contractor shall promptly, and before the conditions are disturbed, give a written notice to the Contracting Officer of

(1) subsurface or latent physical conditions at the site which differ materially from those indicated in this contract, or

(2) unknown physical conditions at the site, of an unusual nature, which differ materially from those ordinarily encountered and generally recognized as inhering in work of the character provided for in the contract.

(b) The Contracting Officer shall investigate the site conditions promptly after receiving the notice. If the conditions do materially so differ and cause an increase or decrease in the Contractor's cost of, or the time required for, performing any part of the work under this contract, whether or not changed as a result of the conditions, an equitable adjustment shall be made under this clause and the contract modified in writing accordingly.

(c) No request by the Contractor for an equitable adjustment to the contract under this clause shall be allowed,

unless the Contractor has given the written notice required; provided, that the time prescribed in (a) above for giving written notice may be extended by the Contracting Officer.

(d) No request by the Contractor for an equitable adjustment to the contract for differing site conditions shall be allowed if made after final payment under this contract.

(End of clause)

52.236-3 SITE INVESTIGATION AND CONDITIONS AFFECTING THE WORK (APR 1984)

(a) The Contractor acknowledges that it has taken steps reasonably necessary to ascertain the nature and location of the work, and that it has investigated and satisfied itself as to the general and local conditions which can affect the work or its cost, including but not limited to

(1) conditions bearing upon transportation, disposal, handling, and storage of materials;

(2) the availability of labor, water, electric power, and roads;

(3) uncertainties of weather, river stages, tides, or similar physical conditions at the site;

(4) the conformation and conditions of the ground; and (5) the character of equipment and facilities needed preliminary to and during work performance. The Contractor also acknowledges that it has satisfied itself as to the character, quality, and quantity of surface and subsurface materials or obstacles to be encountered insofar as this information is reasonably ascertainable from an inspection of the site, including all exploratory work done by the Government, as well as from the drawings and specifications made a part of this contract. Any failure of the Contractor to take the actions described and acknowledged in this paragraph will not relieve the Contractor from responsibility for estimating properly the difficulty and cost of successfully performing the work, or for proceeding to successfully perform the work without additional expense to the Government.

(b) The Government assumes no responsibility for any conclusions or interpretations made by the Contractor based on the information made available by the Government. Nor does the Government assume responsibility for any understanding reached or representation made concerning conditions which can affect the work by any of its officers or agents before the execution of this contract, unless that understanding or representation is expressly stated in this contract.

(End of clause)

52.236-5 MATERIAL AND WORKMANSHIP (APR 1984)

(a) All equipment, material, and articles incorporated into the work covered by this contract shall be new and of the most suitable grade for the purpose intended, unless otherwise specifically provided in this contract. References in the specifications to equipment, material, articles, or patented processes by trade name, make, or catalog number, shall be regarded as establishing a standard of quality and shall not be construed as limiting competition. The Contractor may, at its option, use any equipment, material, article, or process that, in the judgment of the Contracting Officer, is equal to that named in the specifications, unless otherwise specifically provided in this contract.

(b) The Contractor shall obtain the Contracting Officer's approval of the machinery and mechanical and other equipment to be incorporated into the work. When requesting approval, the Contractor shall furnish to the Contracting Officer the name of the manufacturer, the model number, and other information concerning the

performance, capacity, nature, and rating of the machinery and mechanical and other equipment. When required by this contract or by the Contracting Officer, the Contractor shall also obtain the Contracting Officer's approval of the material or articles which the Contractor contemplates incorporating into the work. When requesting approval, the Contractor shall provide full information concerning the material or articles. When directed to do so, the Contractor shall submit samples for approval at the Contractor's expense, with all shipping charges prepaid. Machinery, equipment, material, and articles that do not have the required approval shall be installed or used at the risk of subsequent rejection.

(c) All work under this contract shall be performed in a skillful and workmanlike manner. The Contracting Officer may require, in writing, that the Contractor remove from the work any employee the Contracting Officer deems incompetent, careless, or otherwise objectionable.

(End of clause)

52.236-6 SUPERINTENDENCE BY THE CONTRACTOR (APR 1984)

At all times during performance of this contract and until the work is completed and accepted, the Contractor shall directly superintend the work or assign and have on the worksite a competent superintendent who is satisfactory to the Contracting Officer and has authority to act for the Contractor.

(End of clause)

52.236-7 PERMITS AND RESPONSIBILITIES (NOV 1991)

The Contractor shall, without additional expense to the Government, be responsible for obtaining any necessary licenses and permits, and for complying with any Federal, State, and municipal laws, codes, and regulations applicable to the performance of the work. The Contractor shall also be responsible for all damages to persons or property that occur as a result of the Contractor's fault or negligence. The Contractor shall also be responsible for all materials delivered and work performed until completion and acceptance of the entire work, except for any completed unit of work which may have been accepted under the contract.

(End of clause)

52.236-8 OTHER CONTRACTS (APR 1984)

The Government may undertake or award other contracts for additional work at or near the site of the work under this contract. The Contractor shall fully cooperate with the other contractors and with Government employees and shall carefully adapt scheduling and performing the work under this contract to accommodate the additional work, heeding any direction that may be provided by the Contracting Officer. The Contractor shall not commit or permit any act that will interfere with the performance of work by any other contractor or by Government employees.

(End of clause)

52.236-9 PROTECTION OF EXISTING VEGETATION, STRUCTURES, EQUIPMENT, UTILITIES, AND IMPROVEMENTS (APR 1984)

(a) The Contractor shall preserve and protect all structures, equipment, and vegetation (such as trees, shrubs, and grass) on or adjacent to the work site, which are not to be removed and which do not unreasonably interfere with the work required under this contract. The Contractor shall only remove trees when specifically authorized to do so, and shall avoid damaging vegetation that will remain in place. If any limbs or branches of trees are broken during contract performance, or by the careless operation of equipment, or by workmen, the Contractor shall trim those limbs or branches with a clean cut and paint the cut with a tree-pruning compound as directed by the Contracting Officer.

(b) The Contractor shall protect from damage all existing improvements and utilities

(1) at or near the work site, and

(2) on adjacent property of a third party, the locations of which are made known to or should be known by the Contractor. The Contractor shall repair any damage to those facilities, including those that are the property of a third party, resulting from failure to comply with the requirements of this contract or failure to exercise reasonable care in performing the work. If the Contractor fails or refuses to repair the damage promptly, the Contracting Officer may have the necessary work performed and charge the cost to the Contractor.

(End of clause)

52.236-10 OPERATIONS AND STORAGE AREAS (APR 1984)

(a) The Contractor shall confine all operations (including storage of materials) on Government premises to areas authorized or approved by the Contracting Officer. The Contractor shall hold and save the Government, its officers and agents, free and harmless from liability of any nature occasioned by the Contractor's performance.

(b) Temporary buildings (e.g., storage sheds, shops, offices) and utilities may be erected by the Contractor only with the approval of the Contracting Officer and shall be built with labor and materials furnished by the Contractor without expense to the Government. The temporary buildings and utilities shall remain the property of the Contractor and shall be removed by the Contractor at its expense upon completion of the work. With the written consent of the Contracting Officer, the buildings and utilities may be abandoned and need not be removed.

(c) The Contractor shall, under regulations prescribed by the Contracting Officer, use only established roadways, or use temporary roadways constructed by the Contractor when and as authorized by the Contracting Officer. When materials are transported in prosecuting the work, vehicles shall not be loaded beyond the loading capacity recommended by the manufacturer of the vehicle or prescribed by any Federal, State, or local law or regulation. When it is necessary to cross curbs or sidewalks, the Contractor shall protect them from damage. The Contractor shall repair or pay for the repair of any damaged curbs, sidewalks, or roads.

(End of clause)

52.236-11 USE AND POSSESSION PRIOR TO COMPLETION (APR 1984)

(a) The Government shall have the right to take possession of or use any completed or partially completed part of the work. Before taking possession of or using any work, the Contracting Officer shall furnish the Contractor a list of items of work remaining to be performed or corrected on those portions of the work that the Government intends to take possession of or use. However, failure of the Contracting Officer to list any item of work shall not relieve the Contractor of responsibility for complying with the terms of the contract. The Government's possession or use shall not be deemed an acceptance of any work under the contract.

(b) While the Government has such possession or use, the Contractor shall be relieved of the responsibility for the loss of or damage to the work resulting from the Government's possession or use, notwithstanding the terms of the clause in this contract entitled "Permits and Responsibilities." If prior possession or use by the Government delays the progress of the work or causes additional expense to the Contractor, an equitable adjustment shall be made in the contract price or the time of completion, and the contract shall be modified in writing accordingly.

(End of clause)

52.236-12 CLEANING UP (APR 1984)

The Contractor shall at all times keep the work area, including storage areas, free from accumulations of waste materials. Before completing the work, the Contractor shall remove from the work and premises any rubbish, tools, scaffolding, equipment, and materials that are not the property of the Government. Upon completing the work, the Contractor shall leave the work area in a clean, neat, and orderly condition satisfactory to the Contracting Officer.

(End of clause)

52.236-13 ACCIDENT PREVENTION (NOV 1991) – ALTERNATE I (NOV 1991)

(a) The Contractor shall provide and maintain work environments and procedures which will

(1) safeguard the public and Government personnel, property, materials, supplies, and equipment exposed to Contractor operations and activities;

(2) avoid interruptions of Government operations and delays in project completion dates; and

(3) control costs in the performance of this contract.

(b) For these purposes on contracts for construction or dismantling, demolition, or removal of improvements, the Contractor shall-

(1) Provide appropriate safety barricades, signs, and signal lights;

(2) Comply with the standards issued by the Secretary of Labor at 29 CFR Part 1926 and 29 CFR Part 1910; and

(3) Ensure that any additional measures the Contracting Officer determines to be reasonably necessary for the purposes are taken.

(c) If this contract is for construction or dismantling, demolition or removal of improvements with any Department of Defense agency or component, the Contractor shall comply with all pertinent provisions of the latest version of U.S. Army Corps of Engineers Safety and Health Requirements Manual, EM 385-1-1, in effect on the date of the solicitation.

(d) Whenever the Contracting Officer becomes aware of any noncompliance with these requirements or any condition which poses a serious or imminent danger to the health or safety of the public or Government personnel, the Contracting Officer shall notify the Contractor orally, with written confirmation, and request immediate initiation of corrective action. This notice, when delivered to the Contractor or the Contractor's representative at the work site, shall be deemed sufficient notice of the noncompliance and that corrective action is required. After receiving the notice, the Contractor shall immediately take corrective action. If the Contractor fails or refuses to promptly take corrective action, the Contracting Officer may issue an order stopping all or part of the work until

satisfactory corrective action has been taken. The Contractor shall not be entitled to any equitable adjustment of the contract price or extension of the performance schedule on any stop work order issued under this clause.

(e) The Contractor shall insert this clause, including this paragraph (e), with appropriate changes in the designation of the parties, in subcontracts.

(f) Before commencing the work, the Contractor shall-

(1) Submit a written proposed plan for implementing this clause. The plan shall include an analysis of the significant hazards to life, limb, and property inherent in contract work performance and a plan for controlling these hazards; and

(2) Meet with representatives of the Contracting Officer to discuss and develop a mutual understanding relative to administration of the overall safety program.

(End of clause)

52.236-15 SCHEDULES FOR CONSTRUCTION CONTRACTS (APR 1984)

(a) The Contractor shall, within five days after the work commences on the contract or another period of time determined by the Contracting Officer, prepare and submit to the Contracting Officer for approval three copies of a practicable schedule showing the order in which the Contractor proposes to perform the work, and the dates on which the Contractor contemplates starting and completing the several salient features of the work (including acquiring materials, plant, and equipment). The schedule shall be in the form of a progress chart of suitable scale to indicate appropriately the percentage of work scheduled for completion by any given date during the period. If the Contractor fails to submit a schedule within the time prescribed, the Contracting Officer may withhold approval of progress payments until the Contractor submits the required schedule.

(b) The Contractor shall enter the actual progress on the chart as directed by the Contracting Officer, and upon doing so shall immediately deliver three copies of the annotated schedule to the Contracting Officer. If, in the opinion of the Contracting Officer, the Contractor falls behind the approved schedule, the Contractor shall take steps necessary to improve its progress, including those that may be required by the Contracting Officer, without additional cost to the Government. In this circumstance, the Contracting Officer may require the Contractor to increase the number of shifts, overtime operations, days of work, and/or the amount of construction plant, and to submit for approval any supplementary schedule or schedules in chart form as the Contracting Officer deems necessary to demonstrate how the approved rate of progress will be regained.

(c) Failure of the Contractor to comply with the requirements of the Contracting Officer under this clause shall be grounds for a determination by the Contracting Officer that the Contractor is not prosecuting the work with sufficient diligence to ensure completion within the time specified in the contract. Upon making this determination, the Contracting Officer may terminate the Contractor's right to proceed with the work, or any separable part of it, in accordance with the default terms of this contract.

(End of clause)

52.236-17 LAYOUT OF WORK (APR 1984)

The Contractor shall lay out its work from Government established base lines and bench marks indicated on the drawings, and shall be responsible for all measurements in connection with the layout. The Contractor shall furnish, at its own expense, all stakes, templates, platforms, equipment, tools, materials, and labor required to lay out any

part of the work. The Contractor shall be responsible for executing the work to the lines and grades that may be established or indicated by the Contracting Officer. The Contractor shall also be responsible for maintaining and preserving all stakes and other marks established by the Contracting Officer until authorized to remove them. If such marks are destroyed by the Contractor or through its negligence before their removal is authorized, the Contracting Officer may replace them and deduct the expense of the replacement from any amounts due or to become due to the Contractor.

(End of clause)

52.236-21 SPECIFICATIONS AND DRAWINGS FOR CONSTRUCTION (FEB 1997)

(a) The Contractor shall keep on the work site a copy of the drawings and specifications and shall at all times give the Contracting Officer access thereto. Anything mentioned in the specifications and not shown on the drawings, or shown on the drawings and not mentioned in the specifications, shall be of like effect as if shown or mentioned in both. In case of difference between drawings and specifications, the specifications shall govern. In case of discrepancy in the figures, in the drawings, or in the specifications, the matter shall be promptly submitted to the Contracting Officer, who shall promptly make a determination in writing. Any adjustment by the Contractor without such a determination shall be at its own risk and expense. The Contracting Officer shall furnish from time to time such detailed drawings and other information as considered necessary, unless otherwise provided.

(b) Wherever in the specifications or upon the drawings the words "directed", "required", "ordered", "designated", "prescribed", or words of like import are used, it shall be understood that the "direction", "requirement", "order", "designation", or "prescription", of the Contracting Officer is intended and similarly the words "approved", "acceptable", "satisfactory", or words of like import shall mean "approved by," or "acceptable to", or "satisfactory to" the Contracting Officer, unless otherwise expressly stated.

(c) Where "as shown," as indicated", "as detailed", or words of similar import are used, it shall be understood that the reference is made to the drawings accompanying this contract unless stated otherwise. The word "provided" as used herein shall be understood to mean "provide complete in place," that is "furnished and installed".

(d) Shop drawings means drawings, submitted to the Government by the Contractor, subcontractor, or any lower tier subcontractor pursuant to a construction contract, showing in detail (1) the proposed fabrication and assembly of structural elements, and (2) the installation (i.e., fit, and attachment details) of materials or equipment. It includes drawings, diagrams, layouts, schematics, descriptive literature, illustrations, schedules, performance and test data, and similar materials furnished by the contractor to explain in detail specific portions of the work required by the contract. The Government may duplicate, use, and disclose in any manner and for any purpose shop drawings delivered under this contract.

(e) If this contract requires shop drawings, the Contractor shall coordinate all such drawings, and review them for accuracy, completeness, and compliance with contract requirements and shall indicate its approval thereon as evidence of such coordination and review. Shop drawings submitted to the Contracting Officer without evidence of the Contractor's approval may be returned for resubmission. The Contracting Officer will indicate an approval or disapproval of the shop drawings and if not approved as submitted shall indicate the Government's reasons therefor. Any work done before such approval shall be at the Contractor's risk. Approval by the Contracting Officer shall not relieve the Contractor from responsibility for any errors or omissions in such drawings, nor from responsibility for complying with the requirements of this contract, except with respect to variations described and approved in accordance with (f) below.

(f) If shop drawings show variations from the contract requirements, the Contractor shall describe such variations in writing, separate from the drawings, at the time of submission. If the Contracting Officer approves any such variation, the Contracting Officer shall issue an appropriate contract modification, except that, if the variation is minor or does not involve a change in price or in time of performance, a modification need not be issued.

(g) The Contractor shall submit to the Contracting Officer for approval four copies (unless otherwise indicated) of all shop drawings as called for under the various headings of these specifications. Three sets (unless otherwise indicated) of all shop drawings, will be retained by the Contracting Officer and one set will be returned to the Contractor.

(End of clause)

52.236-26 PRECONSTRUCTION CONFERENCE (FEB 1995)

If the Contracting Officer decides to conduct a preconstruction conference, the successful offeror will be notified and will be required to attend. The Contracting Officer's notification will include specific details regarding the date, time, and location of the conference, any need for attendance by subcontractors, and information regarding the items to be discussed.

(End of clause)

52.239-4001 Year 2000 Compliance

The contractor shall ensure products provided under this contract, to include hardware, software, firmware, and middleware, whether acting alone or combined as a system, are Year 2000 compliant as defined as follows: Year 2000 compliant means with respect to information technology, that the information technology accurately processes date/time data (including, but not limited to, calculating, comparing, and sequencing) from, into, and between the twentieth and twenty-first centuries, and the years 1999 and 2000 and leap year calculations, to the extent that other information, used in combination with the information technology being acquired, properly exchanges date/time data with it.

52.239-4005 Year 2000 Compliance - Construction Contracts

a. In accordance with FAR 39.106, the contractor shall ensure that with respect to any design, construction, goods, or services under this contract as well as any subsequent task/delivery orders issued under this contract (if applicable), all information technology contained therein shall be Year 2000 compliant. Specifically: The contractor shall:

(1) Perform, maintain, and provide an inventory of all major components to include structures, equipment, items, parts, and furnishings under this contract and each task/delivery order which may be affected by the Y2K compliance requirement.

(2) Indicate whether each component is currently Year 2000 compliant or requires an upgrade for compliance prior to government acceptance.

(End of Clause)

52.239-4006 Security Contract Language for all Corps of Engineers' Unclassified Contracts (PIL 2003-06, 19 Feb 03)

All Contractor employees (U.S. citizens and Non- U.S. citizens) working under this contract (to include grants, cooperative agreements and task orders) who require access to Automated Information Systems (AIS), (stand alone computers, network computers/systems, e-mail) shall, at a minimum, be designated into an ADP-III position (non-sensitive) in accordance with DoD 5220-22-R, Industrial Security Regulation. The investigative requirements for an ADP-III position are a favorable National Agency Check (NAC), SF-85P, Public Trust Position. The contractor shall have each applicable employee complete a SF-85P and submit to the USACE, Savannah District Security Officer, ATTN: CESAS-SL, 100 West Oglethorpe Avenue, Savannah, GA 31401 within three (3) working days after award of any contract or task order, and shall be submitted prior to the individual being permitted access to an AIS. Contractors who have a commercial or government entity (CAGE) Code and Facility Security Clearance through the Defense Security Service shall process the NACs and forward visit requests/results of NAC to the Savannah District Security Officer (address above). For those contractors who do not have a CAGE Code or Facility Security Clearance, the Savannah District Security Office will process the investigation in coordination with the Contractor and contract employees.

In accordance with Engineering Regulation, ER 380-1-18, Section 4, foreign nationals who work on Corps of Engineers' contracts or task orders shall be approved by the HQUSACE Foreign Disclosure Officer or higher before beginning work on the contract/task order. This regulation includes subcontractor employees. (NOTE: exceptions to the above requirement include foreign nationals who perform janitorial and/or ground maintenance services.) The contractor shall submit to the Division/District Contract Office, the names of all foreign nationals proposed for performance under this contract/task order, along with documentation to verify that he/she was legally admitted into the United States and has authority to work and/or go to school in the US. Such documentation may include a US passport, Certificate of US citizenship (INS Form N-560 or N-561), Certificate of Naturalization (INS Form N-550 or N-570), foreign passport with I-551 stamp or attached INS Form I-94 indicating employment authorization, Alien Registration Receipt Card with photograph (INS Form I-151 or I-551), Temporary Resident Card (INS Form I-688), Employment Authorization Card (INS Form I-688A), Reentry Permit (INS Form I-327), Refugee Travel Document (INS Form I-571), Employment Authorization Document issued by the INS which contains a photograph (INS Form I-688B).

Classified contracts require the issuance of a DD Form 254 (Department of Defense Contract Security Classification Specification).

52.242-13 BANKRUPTCY (JUL 1995)

In the event the Contractor enters into proceedings relating to bankruptcy, whether voluntary or involuntary, the Contractor agrees to furnish, by certified mail or electronic commerce method authorized by the contract, written notification of the bankruptcy to the Contracting Officer responsible for administering the contract. This notification shall be furnished within five days of the initiation of the proceedings relating to bankruptcy filing. This notification shall include the date on which the bankruptcy petition was filed, the identity of the court in which the bankruptcy petition was filed, and a listing of Government contract numbers and contracting offices for all Government contracts against which final payment has not been made. This obligation remains in effect until final payment under this contract.

(End of clause)

52.242-14 SUSPENSION OF WORK (APR 1984)

(a) The Contracting Officer may order the Contractor, in writing, to suspend, delay, or interrupt all or any part of the work of this contract for the period of time that the Contracting Officer determines appropriate for the convenience of the Government.

(b) If the performance of all or any part of the work is, for an unreasonable period of time, suspended, delayed, or interrupted (1) by an act of the Contracting Officer in the administration of this contract, or (2) by the Contracting Officer's failure to act within the time specified in this contract (or within a reasonable time if not specified), an adjustment shall be made for any increase in the cost of performance of this contract (excluding profit) necessarily caused by the unreasonable suspension, delay, or interruption, and the contract modified in writing accordingly. However, no adjustment shall be made under this clause for any suspension, delay, or interruption to the extent that performance would have been so suspended, delayed, or interrupted by any other cause, including the fault or negligence of the Contractor, or for which an equitable adjustment is provided for or excluded under any other term or condition of this contract. (c) A claim under this clause shall not be allowed (1) for any costs incurred more than 20 days before the Contractor shall have notified the Contracting Officer in writing of the act or failure to act involved (but this requirement shall not apply as to a claim resulting from a suspension order), and (2) unless the claim, in an amount stated, is asserted in writing as soon as practicable after the termination of the suspension, delay, or interruption, but not later than the date of final payment under the contract.

(End of clause)

52.243-4 CHANGES (AUG 1987)

(a) The Contracting Officer may, at any time, without notice to the sureties, if any, by written order designated or indicated to be a change order, make changes in the work within the general scope of the contract, including changes--

(1) In the specifications (including drawings and designs);

(2) In the method or manner of performance of the work;

(3) In the Government-furnished facilities, equipment, materials, services, or site; or

(4) Directing acceleration in the performance of the work.

(b) Any other written or oral order (which, as used in this paragraph (b), includes direction, instruction, interpretation, or determination) from the Contracting Officer that causes a change shall be treated as a change order under this clause; provided, that the Contractor gives the Contracting Officer written notice stating

(1) the date, circumstances, and source of the order and

(2) that the Contractor regards the order as a change order.

(c) Except as provided in this clause, no order, statement, or conduct of the Contracting Officer shall be treated as a change under this clause or entitle the Contractor to an equitable adjustment.

(d) If any change under this clause causes an increase or decrease in the Contractor's cost of, or the time required for, the performance of any part of the work under this contract, whether or not changed by any such order, the Contracting Officer shall make an equitable adjustment and modify the contract in writing. However, except for an adjustment based on defective specifications, no adjustment for any change under paragraph (b) of this clause shall be made for any costs incurred more than 20 days before the Contractor gives written notice as required. In the case of defective specifications for which the Government is responsible, the equitable adjustment shall include any increased cost reasonably incurred by the Contractor in attempting to comply with the defective specifications.

(e) The Contractor must assert its right to an adjustment under this clause within 30 days after

(1) receipt of a written change order under paragraph (a) of this clause or (2) the furnishing of a written notice under paragraph (b) of this clause, by submitting to the Contracting Officer a written statement describing the general nature and amount of the proposal, unless this period is extended by the Government. The statement of proposal for adjustment may be included in the notice under paragraph (b) above.

(f) No proposal by the Contractor for an equitable adjustment shall be allowed if asserted after final payment under this contract.

(End of clause)

52.244-5 COMPETITION IN SUBCONTRACTING (DEC 1996)

(a) The Contractor shall select subcontractors (including suppliers) on a competitive basis to the maximum practical extent consistent with the objectives and requirements of the contract.

(b) If the Contractor is an approved mentor under the Department of Defense Pilot Mentor-Protege Program (Pub. L. 101–510, section 831 as amended), the Contractor may award subcontracts under this contract on a noncompetitive basis to its proteges.

(End of clause)

52.245-2 GOVERNMENT PROPERTY (FIXED-PRICE CONTRACTS) (JUN 2003)

(a) Government-furnished property.

(1) Overseas contracts. If this contract is to be performed outside of the United States and its outlying areas, the words ``Government'' and ``Government-furnished'' (wherever they appear in this clause) shall be construed as ``United States Government'' and ``United States Government-furnished,'' respectively.

(2) The delivery or performance dates for this contract are based upon the expectation that Government-furnished property suitable for use (except for property furnished "as is") will be delivered to the Contractor at the times stated in the Schedule or, if not so stated, in sufficient time to enable the Contractor to meet the contract's delivery or performance dates.

(3) If Government-furnished property is received by the Contractor in a condition not suitable for the intended use, the Contractor shall, upon receipt of it, notify the Contracting Officer, detailing the facts, and, as directed by the Contracting Officer and at Government expense, either repair, modify, return, or otherwise dispose of the property. After completing the directed action and upon written request of the Contractor, the Contracting Officer shall make an equitable adjustment as provided in paragraph (h) of this clause.

(4) If Government-furnished property is not delivered to the Contractor by the required time, the Contracting Officer shall, upon the Contractor's timely written request, make a determination of the delay, if any, caused the Contractor and shall make an equitable adjustment in accordance with paragraph (h) of this clause.

(b) Changes in Government-furnished property. (1) The Contracting Officer may, by written notice, (i) decrease the Government-furnished property provided or to be provided under this contract, or (ii) substitute other Government-furnished property for the property to be provided by the Government, or to be acquired by the Contractor for the

Government, under this contract. The Contractor shall promptly take such action as the Contracting Officer may direct regarding the removal, shipment, or disposal of the property covered by such notice.

(2) Upon the Contractor's written request, the Contracting Officer shall make an equitable adjustment to the contract in accordance with paragraph (h) of this clause, if the Government has agreed in the Schedule to make the property available for performing this contract and there is any--

(i) Decrease or substitution in this property pursuant to subparagraph (b)(1) of this clause; or

(ii) Withdrawal of authority to use this property, if provided under any other contract or lease.

(c) Title in Government property. (1) The Government shall retain title to all Government-furnished property.

(2) All Government-furnished property and all property acquired by the Contractor, title to which vests in the Government under this paragraph (collectively referred to as "Government property"), are subject to the provisions of this clause. However, special tooling accountable to this contract is subject to the provisions of the Special Tooling clause and is not subject to the provisions of this clause. Title to Government property shall not be affected by its incorporation into or attachment to any property not owned by the Government, nor shall Government property become a fixture or lose its identity as personal property by being attached to any real property.

(3) Title to each item of facilities and special test equipment acquired by the Contractor for the Government under this contract shall pass to and vest in the Government when its use in performing this contract commences or when the Government has paid for it, whichever is earlier, whether or not title previously vested in the Government.

(4) If this contract contains a provision directing the Contractor to purchase material for which the Government will reimburse the Contractor as a direct item of cost under this contract--

(i) Title to material purchased from a vendor shall pass to and vest in the Government upon the vendor's delivery of such material; and

(ii) Title to all other material shall pass to and vest in the Government upon--

(A) Issuance of the material for use in contract performance;

(B) Commencement of processing of the material or its use in contract performance; or

(C) Reimbursement of the cost of the material by the Government, whichever occurs first.

(d) Use of Government property. The Government property shall be used only for performing this contract, unless otherwise provided in this contract or approved by the Contracting Officer.

(e) Property administration. (1) The Contractor shall be responsible and accountable for all Government property provided under this contract and shall comply with Federal Acquisition Regulation (FAR) Subpart 45.5, as in effect on the date of this contract.

(2) The Contractor shall establish and maintain a program for the use, maintenance, repair, protection, and preservation of Government property in accordance with sound industrial practice and the applicable provisions of Subpart 45.5 of the FAR.

(3) If damage occurs to Government property, the risk of which has been assumed by the Government under this contract, the Government shall replace the items or the Contractor shall make such repairs as the Government directs. However, if the Contractor cannot effect such repairs within the time required, the Contractor shall dispose of the property as directed by the Contracting Officer. When any property for which the Government is responsible

is replaced or repaired, the Contracting Officer shall make an equitable adjustment in accordance with paragraph (h) of this clause.

(4) The Contractor represents that the contract price does not include any amount for repairs or replacement for which the Government is responsible. Repair or replacement of property for which the Contractor is responsible shall be accomplished by the Contractor at its own expense.

(f) Access. The Government and all its designees shall have access at all reasonable times to the premises in which any Government property is located for the purpose of inspecting the Government property.

(g) Risk of loss. Unless otherwise provided in this contract, the Contractor assumes the risk of, and shall be responsible for, any loss or destruction of, or damage to, Government property upon its delivery to the Contractor or upon passage of title to the Government under paragraph (c) of this clause. However, the Contractor is not responsible for reasonable wear and tear to Government property or for Government property properly consumed in performing this contract.

(h) Equitable adjustment. When this clause specifies an equitable adjustment, it shall be made to any affected contract provision in accordance with the procedures of the Changes clause. When appropriate, the Contracting Officer may initiate an equitable adjustment in favor of the Government. The right to an equitable adjustment shall be the Contractor's exclusive remedy. The Government shall not be liable to suit for breach of contract for--

(1) Any delay in delivery of Government-furnished property;

(2) Delivery of Government-furnished property in a condition not suitable for its intended use;

(3) A decrease in or substitution of Government-furnished property; or

(4) Failure to repair or replace Government property for which the Government is responsible.

(i) Final accounting and disposition of Government property. Upon completing this contract, or at such earlier dates as may be fixed by the Contracting Officer, the Contractor shall submit, in a form acceptable to the Contracting Officer, inventory schedules covering all items of Government property (including any resulting scrap) not consumed in performing this contract or delivered to the Government. The Contractor shall prepare for shipment, deliver f.o.b. origin, or dispose of the Government property as may be directed or authorized by the Contracting Officer. The net proceeds of any such disposal shall be credited to the contract price or shall be paid to the Government as the Contracting Officer directs.

(j) Abandonment and restoration of Contractor's premises. Unless otherwise provided herein, the Government--

(1) May abandon any Government property in place, at which time all obligations of the Government regarding such abandoned property shall cease; and

(2) Has no obligation to restore or rehabilitate the Contractor's premises under any circumstances (e.g., abandonment, disposition upon completion of need, or upon contract completion). However, if the Government-furnished property (listed in the Schedule or specifications) is withdrawn or is unsuitable for the intended use, or if other Government property is substituted, then the equitable adjustment under paragraph (h) of this clause may properly include restoration or rehabilitation costs.

(k) Communications. All communications under this clause shall be in writing.

(l) Overseas contracts. If this contract is to be performed outside of the United States of America, its territories, or possessions, the words "Government" and "Government-furnished" (wherever they appear in this clause) shall be construed as "United States Government" and "United States Government-furnished," respectively.

(End of clause)

52.245-3 IDENTIFICATION OF GOVERNMENT-FURNISHED PROPERTY (APR 1984)

(a) The Government will furnish to the Contractor the property identified in the Schedule to be incorporated or installed into the work or used in performing the contract. The listed property will be furnished f.o.b. railroad cars at the place specified in the contract Schedule or f.o.b. truck at the project site. The Contractor is required to accept delivery, pay any demurrage or detention charges, and unload and transport the property to the job site at its own expense. When the property is delivered, the Contractor shall verify its quantity and condition and acknowledge receipt in writing to the Contracting Officer. The Contractor shall also report in writing to the Contracting Officer within 24 hours of delivery any damage to or shortage of the property as received. All such property shall be installed or incorporated into the work at the expense of the Contractor, unless otherwise indicated in this contract.

55 Each item of property to be furnished under this clause shall be identified in the Schedule by quantity, item, and description.

(End of clause)

52.245-4 GOVERNMENT-FURNISHED PROPERTY (SHORT FORM) (JUN 2003)

(a) The Government shall deliver to the Contractor, at the time and locations stated in this contract, the Government-furnished property described in the Schedule or specifications. If that property, suitable for its intended use, is not delivered to the Contractor, the Contracting Officer shall equitably adjust affected provisions of this contract in accordance with the Changes clause when--

(1) The Contractor submits a timely written request for an equitable adjustment; and

(2) The facts warrant an equitable adjustment.

(b) Title to Government-furnished property shall remain in the Government. The Contractor shall use the Government-furnished property only in connection with this contract. The Contractor shall maintain adequate property control records in accordance with sound industrial practice and will make such records available for Government inspection at all reasonable times, unless the clause at Federal Acquisition Regulation 52.245-1, Property Records, is included in this contract.

(c) Upon delivery of Government-furnished property to the Contractor, the Contractor assumes the risk and responsibility for its loss or damage, except--

(1) For reasonable wear and tear;

(2) To the extent property is consumed in performing this contract; or

(3) As otherwise provided for by the provisions of this contract.

(d) Upon completing this contract, the Contractor shall follow the instructions of the Contracting Officer regarding the disposition of all Government-furnished property not consumed in performing this contract or previously delivered to the Government. The Contractor shall prepare for shipment, deliver f.o.b. origin, or dispose of the Government property, as may be directed or authorized by the Contracting Officer. The net proceeds of any such disposal shall be credited to the contract price or shall be paid to the Government as directed by the Contracting

Officer.

(e) If this contract is to be performed outside the Untied States and its outlying areas, the words ``Government'' and ``Government-furnished'' (wherever they appear in this clause) shall be construed as ``United States Government'' and ``United States Governmen-furnished,'' respectively.

(End of clause)

52.248-3 VALUE ENGINEERING--CONSTRUCTION (FEB 2000)

(a) General. The Contractor is encouraged to develop, prepare, and submit value engineering change proposals (VECP's) voluntarily. The Contractor shall share in any instant contract savings realized from accepted VECP's, in accordance with paragraph (f) below.

(b) Definitions. "Collateral costs," as used in this clause, means agency costs of operation, maintenance, logistic support, or Government-furnished property.

"Collateral savings," as used in this clause, means those measurable net reductions resulting from a VECP in the agency's overall projected collateral costs, exclusive of acquisition savings, whether or not the acquisition cost changes.

"Contractor's development and implementation costs," as used in this clause, means those costs the Contractor incurs on a VECP specifically in developing, testing, preparing, and submitting the VECP, as well as those costs the Contractor incurs to make the contractual changes required by Government acceptance of a VECP.

"Government costs," as used in this clause, means those agency costs that result directly from developing and implementing the VECP, such as any net increases in the cost of testing, operations, maintenance, and logistic support. The term does not include the normal administrative costs of processing the VECP.

"Instant contract savings," as used in this clause, means the estimated reduction in Contractor cost of performance resulting from acceptance of the VECP, minus allowable Contractor's development and implementation costs, including subcontractors' development and implementation costs (see paragraph (h) below).

"Value engineering change proposal (VECP)" means a proposal that--

(1) Requires a change to this, the instant contract, to implement; and

(2) Results in reducing the contract price or estimated cost without impairing essential functions or characteristics; provided, that it does not involve a change--

(i) In deliverable end item quantities only; or

(ii) To the contract type only.

(c) VECP preparation. As a minimum, the Contractor shall include in each VECP the information described in subparagraphs (1) through (7) below. If the proposed change is affected by contractually required configuration management or similar procedures, the instructions in those procedures relating to format, identification, and priority assignment shall govern VECP preparation. The VECP shall include the following:

(1) A description of the difference between the existing contract requirement and that proposed, the comparative advantages and disadvantages of each, a justification when an item's function or characteristics are being altered, and the effect of the change on the end item's performance.

(2) A list and analysis of the contract requirements that must be changed if the VECP is accepted, including any suggested specification revisions.

(3) A separate, detailed cost estimate for

(i) the affected portions of the existing contract requirement and

(ii) the VECP. The cost reduction associated with the VECP shall take into account the Contractor's allowable development and implementation costs, including any amount attributable to subcontracts under paragraph (h) below.

(4) A description and estimate of costs the Government may incur in implementing the VECP, such as test and evaluation and operating and support costs.

(5) A prediction of any effects the proposed change would have on collateral costs to the agency.

(6) A statement of the time by which a contract modification accepting the VECP must be issued in order to achieve the maximum cost reduction, noting any effect on the contract completion time or delivery schedule.

(7) Identification of any previous submissions of the VECP, including the dates submitted, the agencies and contract numbers involved, and previous Government actions, if known.

(d) Submission. The Contractor shall submit VECP's to the Resident Engineer at the worksite, with a copy to the Contracting Officer.

(e) Government action.

(1) The Contracting Officer will notify the Contractor of the status of the VECP within 45 calendar days after the contracting office receives it. If additional time is required, the Contracting Officer will notify the Contractor within the 45-day period and provide the reason for the delay and the expected date of the decision. The Government will process VECP's expeditiously; however, it shall not be liable for any delay in acting upon a VECP.

If the VECP is not accepted, the Contracting Officer will notify the Contractor in writing, explaining the reasons for rejection. The Contractor may withdraw any VECP, in whole or in part, at any time before it is accepted by the Government. The Contracting Officer may require that the Contractor provide written notification before undertaking significant expenditures for VECP effort.

Any VECP may be accepted, in whole or in part, by the Contracting Officer's award of a modification to this contract citing this clause. The Contracting Officer may accept the VECP, even though an agreement on price reduction has not been reached, by issuing the Contractor a notice to proceed with the change. Until a notice to proceed is issued or a contract modification applies a VECP to this contract, the Contractor shall perform in accordance with the existing contract. The decision to accept or reject all or part of any VECP is a unilateral decision made solely at the discretion of the Contracting Officer.

(f) Sharing.

(1) Rates. The Government's share of savings is determined by subtracting Government costs from instant contract savings and multiplying the result by

(i) 45 percent for fixed-price contracts or

(ii) 75 percent for cost-reimbursement contracts.

(2) Payment. Payment of any share due the Contractor for use of a VECP on this contract shall be authorized by a modification to this contract to--

(i) Accept the VECP;

(ii) Reduce the contract price or estimated cost by the amount of instant contract savings; and

(iii) Provide the Contractor's share of savings by adding the amount calculated to the contract price or fee.

(g) Collateral savings. If a VECP is accepted, the Contracting Officer will increase the instant contract amount by 20 percent of any projected collateral savings determined to be realized in a typical year of use after subtracting any Government costs not previously offset. However, the Contractor's share of collateral savings will not exceed the contract's firm-fixed-price or estimated cost, at the time the VECP is accepted, or $100,000, whichever is greater. The Contracting Officer is the sole determiner of the amount of collateral savings.

(h) Subcontracts. The Contractor shall include an appropriate value engineering clause in any subcontract of $50,000 or more and may include one in subcontracts of lesser value. In computing any adjustment in this contract's price under paragraph (f) above, the Contractor's allowable development and implementation costs shall include any subcontractor's allowable development and implementation costs clearly resulting from a VECP accepted by the Government under this contract, but shall exclude any value engineering incentive payments to a subcontractor. The Contractor may choose any arrangement for subcontractor value engineering incentive payments; provided, that these payments shall not reduce the Government's share of the savings resulting from the VECP.

(i) Data. The Contractor may restrict the Government's right to use any part of a VECP or the supporting data by marking the following legend on the affected parts:

"These data, furnished under the Value Engineering-- Construction clause of contract . . . . . , shall not be disclosed outside the Government or duplicated, used, or disclosed, in whole or in part, for any purpose other than to evaluate a value engineering change proposal submitted under the clause. This restriction does not limit the Government's right to use information contained in these data if it has been obtained or is otherwise available from the Contractor or from another source without limitations." If a VECP is accepted, the Contractor hereby grants the Government unlimited rights in the VECP and supporting data, except that, with respect to data qualifying and submitted as limited rights technical data, the Government shall have the rights specified in the contract modification implementing the VECP and shall appropriately mark the data. (The terms "unlimited rights" and "limited rights" are defined in Part 27 of the Federal Acquisition Regulation.)

(End of clause)

52.249-2 TERMINATION FOR CONVENIENCE OF THE GOVERNMENT (FIXED-PRICE) (SEP 1996) - ALTERNATE I (SEP 1996)

(a) The Government may terminate performance of work under this contract in whole or, from time to time, in part if the Contracting Officer determines that a termination is in the Government's interest. The Contracting Officer shall terminate by delivering to the Contractor a Notice of Termination specifying the extent of termination and the effective date.

(b) After receipt of a Notice of Termination, and except as directed by the Contracting Officer, the Contractor shall immediately proceed with the following obligations, regardless of any delay in determining or adjusting any amounts due under this clause:

(1) Stop work as specified in the notice.

(2) Place no further subcontracts or orders (referred to as subcontracts in this clause) for materials, services, or facilities, except as necessary to complete the continued portion of the contract.

(3) Terminate all subcontracts to the extent they relate to the work terminated.

(4) Assign to the Government, as directed by the Contracting Officer, all right, title, and interest of the Contractor under the subcontracts terminated, in which case the Government shall have the right to settle or to pay any termination settlement proposal arising out of those terminations.

(5) With approval or ratification to the extent required by the Contracting Officer, settle all outstanding liabilities and termination settlement proposals arising from the termination of subcontracts; the approval or ratification will be final for purposes of this clause.

(6) As directed by the Contracting Officer, transfer title and deliver to the Government (i) the fabricated or unfabricated parts, work in process, completed work, supplies, and other material produced or acquired for the work terminated, and (ii) the completed or partially completed plans, drawings, information, and other property that, if the contract had been completed, would be required to be furnished to the Government.

(7) Complete performance of the work not terminated.

(8) Take any action that may be necessary, or that the Contracting Officer may direct, for the protection and preservation of the property related to this contract that is in the possession of the Contractor and in which the Government has or may acquire an interest.

(9) Use its best efforts to sell, as directed or authorized by the Contracting Officer, any property of the types referred to in subparagraph (b)(6) of this clause; provided, however, that the Contractor (i) is not required to extend credit to any purchaser and (ii) may acquire the property under the conditions prescribed by, and at prices approved by, the Contracting Officer. The proceeds of any transfer or disposition will be applied to reduce any payments to be made by the Government under this contract, credited to the price or cost of the work, or paid in any other manner directed by the Contracting Officer.

(c) The Contractor shall submit complete termination inventory schedules no later than 120 days from the effective date of termination, unless extended in writing by the Contracting Officer upon written request of the Contractor within this 120-day period.

(d) After expiration of the plant clearance period as defined in Subpart 45.6 of the Federal Acquisition Regulation, the Contractor may submit to the Contracting Officer a list, certified as to quantity and quality, of termination inventory not previously disposed of, excluding items authorized for disposition by the Contracting Officer. The Contractor may request the Government to remove those items or enter into an agreement for their storage. Within 15 days, the Government will accept title to those items and remove them or enter into a storage agreement. The Contracting Officer may verify the list upon removal of the items, or if stored, within 45 days from submission of the list, and shall correct the list, as necessary, before final settlement.

(e) After termination, the Contractor shall submit a final termination settlement proposal to the Contracting Officer in the form and with the certification prescribed by the Contracting Officer. The Contractor shall submit the proposal promptly, but no later than 1 year from the effective date of termination, unless extended in writing by the Contracting Officer upon written request of the Contractor within this 1-year period. However, if the Contracting Officer determines that the facts justify it, a termination settlement proposal may be received and acted on after 1 year or any extension. If the Contractor fails to submit the proposal within the time allowed, the Contracting Officer may determine, on the basis of information available, the amount, if any, due the Contractor because of the termination and shall pay the amount determined.

(f) Subject to paragraph (e) of this clause, the Contractor and the Contracting Officer may agree upon the whole or any part of the amount to be paid or remaining to be paid because of the termination. The amount may include a

reasonable allowance for profit on work done. However, the agreed amount, whether under this paragraph (g) or paragraph (g) of this clause, exclusive of costs shown in subparagraph (g)(3) of this clause, may not exceed the total contract price as reduced by (1) the amount of payments previously made and (2) the contract price of work not terminated. The contract shall be modified, and the Contractor paid the agreed amount. Paragraph (g) of this clause shall not limit, restrict, or affect the amount that may be agreed upon to be paid under this paragraph.

(g) If the Contractor and Contracting Officer fail to agree on the whole amount to be paid the Contractor because of the termination of work, the Contracting Officer shall pay the Contractor the amounts determined as follows, but without duplication of any amounts agreed upon under paragraph (f) of this clause:

(1) For contract work performed before the effective date of termination, the total (without duplication of any items) of--

(i) The cost of this work;

(ii) The cost of settling and paying termination settlement proposals under terminated subcontracts that are properly chargeable to the terminated portion of the contract if not included in subdivision (g)(1)(i) of this clause; and

(iii) A sum, as profit on subdivision (g)(1)(i) of this clause, determined by the Contracting Officer under 49.202 of the Federal Acquisition Regulation, in effect on the date of this contract, to be fair and reasonable; however, if it appears that the Contractor would have sustained a loss on the entire contract had it been completed, the Contracting Officer shall allow no profit under this subdivision (iii) and shall reduce the settlement to reflect the indicated rate of loss.

(2) The reasonable costs of settlement of the work terminated, including--

(i) Accounting, legal, clerical, and other expenses reasonably necessary for the preparation of termination settlement proposals and supporting data;

(ii) The termination and settlement of subcontracts (excluding the amounts of such settlements); and

(iii) Storage, transportation, and other costs incurred, reasonably necessary for the preservation, protection, or disposition of the termination inventory.

(h) Except for normal spoilage, and except to the extent that the Government expressly assumed the risk of loss, the Contracting Officer shall exclude from the amounts payable to the Contractor under paragraph (g) of this clause, the fair value, as determined by the Contracting Officer, of property that is destroyed, lost, stolen, or damaged so as to become undeliverable to the Government or to a buyer.

(i) The cost principles and procedures of Part 31 of the Federal Acquisition Regulation, in effect on the date of this contract, shall govern all costs claimed, agreed to, or determined under this clause.

(j) The Contractor shall have the right of appeal, under the Disputes clause, from any determination made by the Contracting Officer under paragraph (e), (g), or (l) of this clause, except that if the Contractor failed to submit the termination settlement proposal or request for equitable adjustment within the time provided in paragraph (e) or (l), respectively, and failed to request a time extension, there is no right of appeal.

(k) In arriving at the amount due the Contractor under this clause, there shall be deducted--

(1) All unliquidated advance or other payments to the Contractor under the terminated portion of this contract;

(2) Any claim which the Government has against the Contractor under this contract; and

(3) The agreed price for, or the proceeds of sale of, materials, supplies, or other things acquired by the Contractor or sold under the provisions of this clause and not recovered by or credited to the Government.

(l) If the termination is partial, the Contractor may file a proposal with the Contracting Officer for an equitable adjustment of the price(s) of the continued portion of the contract. The Contracting Officer shall make any equitable adjustment agreed upon. Any proposal by the Contractor for an equitable adjustment under this clause shall be requested within 90 days from the effective date of termination unless extended in writing by the Contracting Officer.

(m)(1) The Government may, under the terms and conditions it prescribes, make partial payments and payments against costs incurred by the Contractor for the terminated portion of the contract, if the Contracting Officer believes the total of these payments will not exceed the amount to which the Contractor will be entitled.

(2) If the total payments exceed the amount finally determined to be due, the Contractor shall repay the excess to the Government upon demand, together with interest computed at the rate established by the Secretary of the Treasury under 50 U.S.C. App. 1215(b)(2). Interest shall be computed for the period from the date the excess payment is received by the Contractor to the date the excess is repaid. Interest shall not be charged on any excess payment due to a reduction in the Contractor's termination settlement proposal because of retention or other disposition of termination inventory until 10 days after the date of the retention or disposition, or a later date determined by the Contracting Officer because of the circumstances.

(n) Unless otherwise provided in this contract or by statute, the Contractor shall maintain all records and documents relating to the terminated portion of this contract for 3 years after final settlement. This includes all books and other evidence bearing on the Contractor's costs and expenses under this contract. The Contractor shall make these records and documents available to the Government, at the Contractor's office, at all reasonable times, without any direct charge. If approved by the Contracting Officer, photographs, microphotographs, or other authentic reproductions may be maintained instead of original records and documents.

(End of clause)

52.249-10 DEFAULT (FIXED-PRICE CONSTRUCTION) (APR 1984)

(a) If the Contractor refuses or fails to prosecute the work or any separable part, with the diligence that will insure its completion within the time specified in this contract including any extension, or fails to complete the work within this time, the Government may, by written notice to the Contractor, terminate the right to proceed with the work (or the separable part of the work) that has been delayed. In this event, the Government may take over the work and complete it by contract or otherwise, and may take possession of and use any materials, appliances, and plant on the work site necessary for completing the work. The Contractor and its sureties shall be liable for any damage to the Government resulting from the Contractor's refusal or failure to complete the work within the specified time, whether or not the Contractor's right to proceed with the work is terminated. This liability includes any increased costs incurred by the Government in completing the work.

(b) The Contractor's right to proceed shall not be terminated nor the Contractor charged with damages under this clause, if--

(1) The delay in completing the work arises from unforeseeable causes beyond the control and without the fault or negligence of the Contractor. Examples of such causes include

(i) acts of God or of the public enemy,

(ii) acts of the Government in either its sovereign or contractual capacity,

(iii) acts of another Contractor in the performance of a contract with the Government,

(iv) fires,

(v) floods,

(vi) epidemics,

(vii) quarantine restrictions,

(viii) strikes,

(ix) freight embargoes,

(x) unusually severe weather, or delays of subcontractors or suppliers at any tier arising from unforeseeable causes beyond the control and without the fault or negligence of both the Contractor and the subcontractors or suppliers; and

(2) The Contractor, within 10 days from the beginning of any delay (unless extended by the Contracting Officer), notifies the Contracting Officer in writing of the causes of delay. The Contracting Officer shall ascertain the facts and the extent of delay. If, in the judgment of the Contracting Officer, the findings of fact warrant such action, the time for completing the work shall be extended. The findings of the Contracting Officer shall be final and conclusive on the parties, but subject to appeal under the Disputes clause.

(c) If, after termination of the Contractor's right to proceed, it is determined that the Contractor was not in default, or that the delay was excusable, the rights and obligations of the parties will be the same as if the termination had been issued for the convenience of the Government.

The rights and remedies of the Government in this clause are in addition to any other rights and remedies provided by law or under this contract.

(End of clause)

52.253-1 COMPUTER GENERATED FORMS (JAN 1991)

(a) Any data required to be submitted on a Standard or Optional Form prescribed by the Federal Acquisition Regulation (FAR) may be submitted on a computer generated version of the form, provided there is no change to the name, content, or sequence of the data elements on the form, and provided the form carries the Standard or Optional Form number and edition date.

(b) Unless prohibited by agency regulations, any data required to be submitted on an agency unique form prescribed by an agency supplement to the FAR may be submitted on a computer generated version of the form provided there is no change to the name, content, or sequence of the data elements on the form and provided the form carries the agency form number and edition date.

56 If the Contractor submits a computer generated version of a form that is different than the required form, then the rights and obligations of the parties will be determined based on the content of the required form.

(End of clause)

252.201-7000 CONTRACTING OFFICER'S REPRESENTATIVE (DEC 1991)

(a) "Definition. Contracting officer's representative" means an individual designated in accordance with subsection 201.602-2 of the Defense Federal Acquisition Regulation Supplement and authorized in writing by the contracting officer to perform specific technical or administrative functions.

(b) If the Contracting Officer designates a contracting officer's representative (COR), the Contractor will receive a copy of the written designation. It will specify the extent of the COR's authority to act on behalf of the contracting officer. The COR is not authorized to make any commitments or changes that will affect price, quality, quantity, delivery, or any other term or condition of the contract.

(End of clause)

252.203-7001 PROHIBITION ON PERSONS CONVICTED OF FRAUD OR OTHER DEFENSE-CONTRACT-RELATED FELONIES (MAR 1999)

(a) Definitions. As used in this clause—

(1) “Arising out of a contract with the DoD” means any act in connection with—

(i) Attempting to obtain;

(ii) Obtaining, or

(iii) Performing a contract or first-tier subcontract of any agency, department, or component of the Department of Defense (DoD).

(2) “Conviction of fraud or any other felony” means any conviction for fraud or a felony in violation of state or Federal criminal statutes, whether entered on a verdict or plea, including a plea of *nolo contendere*, for which sentence has been imposed.

(3) “Date of conviction” means the date judgment was entered against the individual.

(b) Any individual who is convicted after September 29, 1988, of fraud or any other felony arising out of a contract with the DoD is prohibited from serving--

(1) In a management or supervisory capacity on any DoD contract or first-tier subcontract;

(2) On the board of directors of any DoD contractor or first-tier subcontractor;

(3) As a consultant, agent, or representative for any DoD contractor or first-tier subcontractor; or

(4) In any other capacity with the authority to influence, advise, or control the decisions of any DoD contractor or subcontractor with regard to any DoD contract or first-tier subcontract.

(c) Unless waived, the prohibition in paragraph (b) of this clause applies for not less than 5 years from the date of conviction.

(d) 10 U.S.C. 2408 provides that a defense contractor or first-tier subcontractor shall be subject to a criminal penalty of not more than $500,000 if convicted of knowingly—

(1) Employing a person under a prohibition specified in paragraph (b) of this clause; or

(2) Allowing such a person to serve on the board of directors of the contractor or first-tier subcontractor.

(e) In addition to the criminal penalties contained in 10 U.S.C. 2408, the Government may consider other available remedies, such as—

(1) Suspension or debarment;

(2) Cancellation of the contract at no cost to the Government; or

(3) Termination of the contract for default.

(f) The Contractor may submit written requests for waiver of the prohibition in paragraph (b) of this clause to the Contracting Officer. Requests shall clearly identify—

(1) The person involved;

(2) The nature of the conviction and resultant sentence or punishment imposed;

(3) The reasons for the requested waiver; and

(4) An explanation of why a waiver is in the interest of national security.

(g) The Contractor agrees to include the substance of this clause, appropriately modified to reflect the identity and relationship of the parties, in all first-tier subcontracts exceeding the simplified acquisition threshold in Part 2 of the Federal Acquisition Regulation, except those for commercial items or components.

(h) Pursuant to 10 U.S.C. 2408(c), defense contractors and subcontractors may obtain information as to whether a particular person has been convicted of fraud or any other felony arising out of a contract with the DoD by contacting The Office of Justice Programs, The Denial of Federal Benefits Office, U.S. Department of Justice, telephone (202) 616-3507.

(End of clause)

252.203-7002 DISPLAY OF DOD HOTLINE POSTER (DEC 1991)

(a) The Contractor shall display prominently in common work areas within business segments performing work under Department of Defense (DoD) contracts, DoD Hotline Posters prepared by the DoD Office of the Inspector General.

(b) DoD Hotline Posters may be obtained from the DoD Inspector General, ATTN: Defense Hotline, 400 Army Navy Drive, Washington, DC 22202-2884.

57 The Contractor need not comply with paragraph (a) of this clause if it has established a mechanism, such as a hotline, by which employees may report suspected instances of improper conduct, and instructions that encourage employees to make such reports.

(End of clause)

252.204-7000 DISCLOSURE OF INFORMATION (DEC 1991)

(a) The Contractor shall not release to anyone outside the Contractor's organization any unclassified information, regardless of medium (e.g., film, tape, document), pertaining to any part of this contract or any program related to this contract, unless--

(1) The Contracting Officer has given prior written approval; or

(2) The information is otherwise in the public domain before the date of release.

(b) Requests for approval shall identify the specific information to be released, the medium to be used, and the purpose for the release. The Contractor shall submit its request to the Contracting Officer at least 45 days before the proposed date for release.

(c) The Contractor agrees to include a similar requirement in each subcontract under this contract. Subcontractors shall submit requests for authorization to release through the prime contractor to the Contracting Officer.

(End of clause)

252.204-7003 CONTROL OF GOVERNMENT PERSONNEL WORK PRODUCT (APR 1992)

The Contractor's procedures for protecting against unauthorized disclosure of information shall not require Department of Defense employees or members of the Armed Forces to relinquish control of their work products, whether classified or not, to the contractor.

(End of clause)

252.204-7004 ALTERNATE A CENTRAL CONTRACTOR REGISTRATION (NOV 2003)

(a) *Definitions*. As used in this clause--
"Central Contractor Registration (CCR) database" means the primary Government repository for contractor information required for the conduct of business with the Government.
"Commercial and Government Entity (CAGE) code" means-

(1) A code assigned by the Defense Logistics Information Service (DLIS) to identify a commercial or Government entity; or

(2) A code assigned by a member of the North Atlantic Treaty Organization that DLIS records and maintains in the CAGE master file. This type of code is known as an "NCAGE code."

"Data Universal Numbering System (DUNS) number" means the 9-digit number assigned by Dun and Bradstreet, Inc. (D&B) to identify unique business entities.
"Data Universal Numbering System +4 (DUNS+4) number" means the DUNS number assigned by D&B plus a 4-character suffix that may be assigned by a business concern. (D&B has no affiliation with this 4-character suffix.) This 4-character suffix may be assigned at the discretion of the business concern to establish additional CCR records for identifying alternative Electronic Funds Transfer (EFT) accounts (see Subpart 32.11 of the Federal Acquisition Regulation) for the same parent concern.
"Registered in the CCR database" means that-

(1) The Contractor has entered all mandatory information, including the DUNS number or the DUNS+4 number, into the CCR database;

(2) The Contractor's CAGE code is in the CCR database; and

(3) The Government has validated all mandatory data fields and has marked the records "Active."

(b)(1) By submission of an offer, the offeror acknowledges the requirement that a prospective awardee shall be registered in the CCR database prior to award, during performance, and through final payment of any contract, basic agreement, basic ordering agreement, or blanket purchasing agreement resulting from this solicitation.

(2) The offeror shall enter, in the block with its name and address on the cover page of its offer, the annotation “DUNS” or “DUNS +4” followed by the DUNS or DUNS +4 number that identifies the offeror's name and address exactly as stated in the offer. The DUNS number will be used by the Contracting Officer to verify that the offeror is registered in the CCR database.

(c) If the offeror does not have a DUNS number, it should contact Dun and Bradstreet directly to obtain one.

(1) An offeror may obtain a DUNS number--

(i) If located within the United States, by calling Dun and Bradstreet at 1-866-705-5711 or via the Internet at http://www.dnb.com; or

(ii) If located outside the United States, by contacting the local Dun and Bradstreet office.

(2) The offeror should be prepared to provide the following information:

(i) Company legal business.

(ii) Tradestyle, doing business, or other name by which your entity is commonly recognized.

(iii) Company Physical Street Address, City, State, and Zip Code.

(iv) Company Mailing Address, City, State and Zip Code (if separate from physical).

(v) Company Telephone Number.

(vi) Date the company was started.

(vii) Number of employees at your location.

(viii) Chief executive officer/key manager.

(ix) Line of business (industry).

(x) Company Headquarters name and address (reporting relationship within your entity).

(d) If the Offeror does not become registered in the CCR database in the time prescribed by the Contracting Officer, the Contracting Officer will proceed to award to the next otherwise successful registered Offeror.

(e) Processing time, which normally takes 48 hours, should be taken into consideration when registering. Offerors who are not registered should consider applying for registration immediately upon receipt of this solicitation.

(f) The Contractor is responsible for the accuracy and completeness of the data within the CCR database, and for any liability resulting from the Government's reliance on inaccurate or incomplete data. To remain registered in the CCR database after the initial registration, the Contractor is required to review and update on an annual basis from the date of initial registration or subsequent updates its information in the CCR database to ensure it is current, accurate and complete. Updating information in the CCR does not alter the terms and conditions of this contract and is not a substitute for a properly executed contractual document.

(g)(1)(i) If a Contractor has legally changed its business name, “doing business as” name, or division name (whichever is shown on the contract), or has transferred the assets used in performing the contract, but has not completed the necessary requirements regarding novation and change-of-name agreements in Subpart 42.12, the Contractor shall provide the responsible Contracting Officer a minimum of one business day's written notification of its intention to (A) change the name in the CCR database; (B) comply with the requirements of Subpart 42.12 of the

FAR; and (C) agree in writing to the timeline and procedures specified by the responsible Contracting Officer. The Contractor must provide with the notification sufficient documentation to support the legally changed name.

(ii) If the Contractor fails to comply with the requirements of paragraph (g)(1)(i) of this clause, or fails to perform the agreement at paragraph (g)(1)(i)(C) of this clause, and, in the absence of a properly executed novation or change-of-name agreement, the CCR information that shows the Contractor to be other than the Contractor indicated in the contract will be considered to be incorrect information within the meaning of the “Suspension of Payment” paragraph of the electronic funds transfer (EFT) clause of this contract.

(2) The Contractor shall not change the name or address for EFT payments or manual payments, as appropriate, in the CCR record to reflect an assignee for the purpose of assignment of claims (see FAR Subpart 32.8, Assignment of Claims). Assignees shall be separately registered in the CCR database. Information provided to the Contractor's CCR record that indicates payments, including those made by EFT, to an ultimate recipient other than that Contractor will be considered to be incorrect information within the meaning of the “Suspension of payment” paragraph of the EFT clause of this contract.

(h) Offerors and Contractors may obtain information on registration and annual confirmation requirements via the internet at http://www.ccr.gov or by calling 1-888-227-2423, or 269-961-5757.

(End of clause)

252.205-7000 PROVISION OF INFORMATION TO COOPERATIVE AGREEMENT HOLDERS (DEC 1991)

(a) Definition.

"Cooperative agreement holder" means a State or local government; a private, nonprofit organization; a tribal organization (as defined in section 4(c) of the Indian Self-Determination and Education Assistance Act (Pub. L. 93-268; 25 U.S.C. 450 (c))); or an economic enterprise (as defined in section 3(e) of the Indian Financing Act of 1974 (Pub. L. 93-362; 25 U.S.C. 1452(e))) whether such economic enterprise is organized for profit or nonprofit purposes; which has an agreement with the Defense Logistics Agency to furnish procurement technical assistance to business entities.

(b) The Contractor shall provide cooperative agreement holders, upon their request, with a list of those appropriate employees or offices responsible for entering into subcontracts under defense contracts. The list shall include the business address, telephone number, and area of responsibility of each employee or office.

(c) The Contractor need not provide the listing to a particular cooperative agreement holder more frequently than once a year.

(End of clause)

252.209-7000 ACQUISITION FROM SUBCONTRACTORS SUBJECT TO ONSITE INSPECTION UNDER THE INTERMEDIATE-RANGE NUCLEAR FORCES (INF) TREATY (NOV 1995)

(a) The Contractor shall not deny consideration for a subcontract award under this contract to a potential subcontractor subject to on-site inspection under the INF Treaty, or a similar treaty, solely or in part because of the actual or potential presence of Soviet inspectors at the subcontractor's facility, unless the decision is approved by the Contracting Officer.

(b) The Contractor shall incorporate this clause, including this paragraph (b), in all solicitations and contracts exceeding the simplified acquisition threshold in part 13 of the Federal Acquisition Regulation, except those for commercial items.

(End of clause)

252.209-7004 SUBCONTRACTING WITH FIRMS THAT ARE OWNED OR CONTROLLED BY THE GOVERNMENT OF A TERRORIST COUNTRY (MAR 1998)

(a) Unless the Government determines that there is a compelling reason to do so, the Contractor shall not enter into any subcontract in excess of $25,000 with a firm, or subsidiary of a firm, that is identified, on the List of Parties Excluded from Federal Procurement and Nonprocurement Programs, as being ineligible for the award of Defense contracts or subcontracts because it is owned or controlled by the government of a terrorist country.

(b) A corporate officer or a designee of the Contractor shall notify the Contracting Officer, in writing, before entering into a subcontract with a party that is identified, on the List of Parties Excluded from Federal Procurement and Nonprocurement Programs, as being ineligible for the award of Defense contracts or subcontracts because it is owned or controlled by the government of a terrorist country. The notice must include the name of the proposed subcontractor notwithstanding its inclusion on the List of Parties Excluded From Federal Procurement and Nonprocurement Programs.

(End of clause)

252.215-7000 PRICING ADJUSTMENTS (DEC 1991)

The term "pricing adjustment," as used in paragraph (a) of the clauses entitled "Price Reduction for Defective Cost or Pricing Data - Modifications," "Subcontractor Cost or Pricing Data," and "Subcontractor Cost or Pricing Data - Modifications," means the aggregate increases and/or decreases in cost plus applicable profits.

(End of clause)

252.219-7009 SECTION 8(A) DIRECT AWARD (MAR 2002)

(a) This contract is issued as a direct award between the contracting office and the 8(a) Contractor pursuant to the Partnership Agreement dated February 1, 2002, between the Small Business Administration (SBA) and the Department of Defense. Accordingly, the SBA, even if not identified in Section A of this contract, is the prime contractor and retains responsibility for 8(a) certification, for 8(a) eligibility determinations and related issues, and for providing counseling and assistance to the 8(a) Contractor under the 8(a) Program. The cognizant SBA district office is:

(To be completed by the Contracting Officer at the time of award)

(b) The contracting office is responsible for administering the contract and for taking any action on behalf of the Government under the terms and conditions of the contract; provided that the contracting office shall give advance notice to the SBA before it issues a final notice terminating performance, either in whole or in part, under the

contract. The contracting office also shall coordinate with the SBA prior to processing any novation agreement. The contracting office may assign contract administration functions to a contract administration office.

(c) The Contractor agrees that--

(1) It will notify the Contracting Officer, simultaneous with its notification to the SBA (as required by SBA's 8(a) regulations at 13 CFR 124.308), when the owner or owners upon whom 8(a) eligibility is based plan to relinquish ownership or control of the concern. Consistent with Section 407 of Pub. L. 100-656, transfer of ownership or control shall result in termination of the contract for convenience, unless the SBA waives the requirement for termination prior to the actual relinquishing of ownership and control; and

(2) It will not subcontract the performance of any of the requirements of this contract without the prior written approval of the SBA and the Contracting Officer.

(End of Clause)

252.219-7010 NOTIFICATION OF COMPETITION LIMITED TO ELIGIBLE 8(A) CONCERNS - ALTERNATE A (JUN 1998)

(a) Offers are solicited only from small business concerns expressly certified by the Small Business Administration (SBA) for participation in the SBA's 8(a) Program and which meet the following criteria at the time of submission of offer--

(1) The Offeror is in conformance with the 8(a) limitation set forth in its approved business plan; and

(2) The Offeror is in conformance with the Business Activity Targets set forth in its approved business plan or any remedial action directed by the SBA.

(b) By submission of its offer, the Offeror represents that it meets all of the criteria set forth in paragraph (a) of this clause.

(c) Any award resulting from this solicitation will be made directly by the Contracting Officer to the successful 8(a) offeror selected through the evaluation criteria set forth in this solicitation.

(d)(1) Agreement. A small business concern submitting an offer in its own name agrees to furnish, in performing the contract, only end items manufactured or produced by small business concerns in the United States. The term "United States" includes its territories and possessions, the Commonwealth of Puerto Rico, the trust territory of the Pacific Islands, and the District of Columbia. If this procurement is processed under simplified acquisition procedures and the total amount of this contract does not exceed $25,000, a small business concern may furnish the product of any domestic firm. This subparagraph does not apply in connection with construction or service contracts.

(2) The [insert name of SBA's contractor] will notify the [insert name of contracting agency] . Contracting Officer in writing immediately upon entering an agreement (either oral or written) to transfer all or part of its stock or other ownership interest to any other party.

(End of clause)

252.223-7006 PROHIBITION ON STORAGE AND DISPOSAL OF TOXIC AND HAZARDOUS MATERIALS (APR 1993)

(a) "Definitions".

As used in this clause --

(1) "Storage" means a non-transitory, semi-permanent or permanent holding, placement, or leaving of material. It does not include a temporary accumulation of a limited quantity of a material used in or a waste generated or resulting from authorized activities, such as servicing, maintenance, or repair of Department of Defense (DoD) items, equipment, or facilities.

(2) "Toxic or hazardous materials" means:

(i) Materials referred to in section 101(14) of the Comprehensive Environmental Response, Compensation, and Liability Act (CERCLA) of 1980 (42 U.S.C. 9601(14)) and materials designated under section 102 of CERCLA (42 U.S.C. 9602) (40 CFR part 302);

(ii) Materials that are of an explosive, flammable, or pyrotechnic nature; or

(iii) Materials otherwise identified by the Secretary of Defense as specified in DoD regulations.

(b) In accordance with 10 U.S.C. 2692, the Contractor is prohibited from storing or disposing of non-DoD-owned toxic or hazardous materials on a DoD installation, except to the extent authorized by a statutory exception to 10 U.S.C. 2692 or as authorized by the Secretary of Defense or his designee.

(End of clause)

252.225-7012 PREFERENCE FOR CERTAIN DOMESTIC COMMODITIES (FEB 2003)

(a) Definitions. As used in this clause--

(1) Component means any item supplied to the Government as part of an end product or of another component.

(2) End product means supplies delivered under a line item of this contract.

(b) The Contractor shall deliver under this contract only such of the following items, either as end products or components, that have been grown, reprocessed, reused, or produced in the United States, its possessions, or Puerto Rico:

(1) Food.

(2) Clothing.

(3) Tents, tarpaulins, or covers.

(4) Cotton and other natural fiber products.

(5) Woven silk or woven silk blends.

(6) Spun silk yarn for cartridge cloth.

(7) Synthetic fabric, and coated synthetic fabric, including all textile fibers and yarns that are for use in such fabrics.

(8) Canvas products.

(9) Wool (whether in the form of fiber or yarn or contained in fabrics, materials, or manufactured articles).

(10) Any item of individual equipment (Federal Supply Class 8465) manufactured from or containing fibers, yarns, fabrics, or materials listed in this paragraph (b).

(c) This clause does not apply--

(1) To items listed in section 25.104(a) of the Federal Acquisition Regulation (FAR), or other items for which the Government has determined that a satisfactory quality and sufficient quantity cannot be acquired as and when needed at U.S. market prices;

(2) To end products incidentally incorporating cotton, other natural fibers, or wool, for which the estimated value of the cotton, other natural fibers, or wool--

(i) Is not more than 10 percent of the total price of the end product; and (ii) Does not exceed the simplified acquisition threshold in FAR part 2;

(3) To foods that have been manufactured or processed in the United States, its possessions, or Puerto Rico, regardless of where the foods (and any component if applicable) were grown or produced, except that this clause does apply to fish, shellfish, or seafood manufactured or processed in the United States and fish, shellfish, or seafood contained in foods manufactured or processed in the United States;

(4) To chemical warfare protective clothing produced in the countries listed in subsection 225.872-1 of the Defense FAR Supplement; or

(5) To fibers and yarns that are for use in synthetic fabric or coated synthetic fabric (but does apply to the synthetic or coated synthetic fabric itself), if--

(i) The fabric is to be used as a component of an end product that is not a textile product. Examples of textile products, made in whole or in part of fabric, include--

(A) Draperies, floor coverings, furnishings, and bedding (Federal Supply Group 72, Household and Commercial Furnishings and Appliances);

(B) Items made in whole or in part of fabric in Federal Supply Group 83, Textile/leather/furs/apparel/findings/ tents/flags, or Federal Supply Group 84, Clothing, Individual Equipment and Insignia;

(C) Upholstered seats (whether for household, office, or other use); and

(D) Parachutes (Federal Supply Class 1670); or

(ii) The fibers and yarns are para-aramid fibers and yarns manufactured in the Netherlands.

(End of clause)

252.225-7031 SECONDARY ARAB BOYCOTT OF ISRAEL (APR 2003)

(a) Definitions. As used in this provision--

(1) Foreign person means any person (including any individual, partnership, corporation, or other form of association) other than a United States person.

(2) United States person is defined in 50 U.S.C. App. 2415(2) and means--

(i) Any United States resident or national (other than an individual resident outside the United States who is employed by other than a United States person);

(ii) Any domestic concern (including any permanent domestic establishment of any foreign concern); and

(iii) Any foreign subsidiary or affiliate (including any permanent foreign establishment) of any domestic concern that is controlled in fact by such domestic concern.

(b) Certification. If the offeror is a foreign person, the offeror certifies, by submission of an offer, that it--

(1) Does not comply with the Secondary Arab Boycott of Israel; and

(2) Is not taking or knowingly agreeing to take any action, with respect to the Secondary Boycott of Israel by Arab countries, which 50 U.S.C. App. 2407(a) prohibits a United States person from taking.

(End of provision)

252.226-7001 UTILIZATION OF INDIAN ORGANIZATIONS AND INDIAN-OWNED ECONOMIC ENTERPRISES, AND HAWAIIAN SMALL BUSINESS CONCERNS (OCT 2003)

(a) Definitions. As used in this clause--

Indian means any person who is a member of any Indian tribe, band, group, pueblo, or community that is recognized by the Federal Government as eligible for services from the Bureau of Indian Affairs (BIA) in accordance with 25 U.S.C. 1452(c) and any ``Native" as defined in the Alaska Native Claims Settlement Act (43 U.S.C. 1601).

Indian organization means the governing body of any Indian tribe or entity established or recognized by the governing body of an Indian tribe for the purposes of 25 U.S.C. chapter 17.

Indian-owned economic enterprise means any Indian-owned (as determined by the Secretary of the Interior) commercial, industrial, or business activity established or organized for the purpose of profit, provided that Indian ownership constitutes not less than 51 percent of the enterprise.

Indian tribe means any Indian tribe, band, group, pueblo, or community, including native villages and native groups (including corporations organized by Kenai, Juneau, Sitka, and Kodiak) as defined in the Alaska Native Claims Settlement Act, that is recognized by the Federal Government as eligible for services from BIA in accordance with 25 U.S.C. 1452(c).

Interested party means a contractor or an actual or prospective offeror whose direct economic interest would be affected by the award of a subcontract or by the failure to award a subcontract.

Native Hawaiian small business concern means an entity that is--

(1) A small business concern as defined in section 3 of the Small Business Act (15 U.S.C. 632) and relevant implementing regulations; and

(2) Owned and controlled by a Native Hawaiian as defined in 25 U.S.C. 4221(9).

(b) The Contractor shall use its best efforts to give Indian organizations, Indian-owned economic enterprises, and Native Hawaiian small business concerns the maximum practicable opportunity to participate in the subcontracts it awards, to the fullest extent consistent with efficient performance of the contract.

(c) The Contracting Officer and the Contractor, acting in good faith, may rely on the representation of an Indian organization, Indian-owned economic enterprise, or Native Hawaiian small business concern as to its eligibility, unless an interested party challenges its status or the Contracting Officer has independent reason to question that status.

(d) In the event of a challenge to the representation of a subcontractor, the Contracting Officer will refer the matter to--

(1) For matters relating to Indian organizations or Indian-owned economic enterprises: U.S. Department of the Interior, Bureau of Indian Affairs, Attn: Chief, Division of Contracting and Grants Administration, 1849 C Street NW, MS-2626-MIB, Washington, DC 20240-4000. The BIA will determine the eligibility and will notify the Contracting Officer.

(2) For matters relating to Native Hawaiian small business concerns: Department of Hawaiian Home Lands, PO Box 1879, Honolulu, HI 96805. The Department of Hawaiian Home Lands will determine the eligibility and will notify the Contracting Officer.

(e) No incentive payment will be made--

(1) While a challenge is pending; or

(2) If a subcontractor is determined to be an ineligible participant.

(f)(1) The Contractor, on its own behalf or on behalf of a subcontractor at any tier, may request an incentive payment in accordance with this clause.

(2) The incentive amount that may be requested is 5 percent of the estimated cost, target cost, or fixed price included in the subcontract at the time of award to the Indian organization, Indian-owned economic enterprise, or Native Hawaiian small business concern.

(3) In the case of a subcontract for commercial items, the Contractor may receive an incentive payment only if the subcontracted items are produced or manufactured in whole or in part by an Indian organization, Indian-owned economic enterprise, or Native Hawaiian small business concern.

(4) The Contractor has the burden of proving the amount claimed and shall assert its request for an incentive payment prior to completion of contract performance.

(5) The Contracting Officer, subject to the terms and conditions of the contract and the availability of funds, will authorize an incentive payment of 5 percent of the estimated cost, target cost, or fixed price included in the subcontract awarded to the Indian organization, Indian-owned economic enterprise, or Native Hawaiian small business concern.

(6) If the Contractor requests and receives an incentive payment on behalf of a subcontractor, the Contractor is obligated to pay the subcontractor the incentive amount.

(g) The Contractor shall insert the substance of this clause, including this paragraph (g), in all subcontracts exceeding $500,000 for which further subcontracting opportunities may exist.

(End of clause)

252.227-7033 RIGHTS IN SHOP DRAWINGS (APR 1966)

(a) Shop drawings for construction means drawings, submitted to the Government by the Construction Contractor, subcontractor or any lower-tier subcontractor pursuant to a construction contract, showing in detail (i) the proposed fabrication and assembly of structural elements and (ii) the installation (i.e., form, fit, and attachment details) of materials or equipment. The Government may duplicate, use, and disclose in any manner and for any purpose shop drawings delivered under this contract.

(b) This clause, including this paragraph (b), shall be included in all subcontracts hereunder at any tier.

252.236-7000 MODIFICATION PROPOSALS - PRICE BREAKDOWN. (DEC 1991)

(a) The Contractor shall furnish a price breakdown, itemized as required and within the time specified by the Contracting Officer, with any proposal for a contract modification.

(b) The price breakdown --

(1) Must include sufficient detail to permit an analysis of profit, and of all costs for --

(i) Material;

(ii) Labor;

(iii) Equipment;

(iv) Subcontracts; and

(v) Overhead; and

(2) Must cover all work involved in the modification, whether the work was deleted, added, or changed.

(c) The Contractor shall provide similar price breakdowns to support any amounts claimed for subcontracts.

(d) The Contractor's proposal shall include a justification for any time extension proposed.

252.236-7005 AIRFIELD SAFETY PRECAUTIONS. (DEC 1991)

(a) Definitions. As used in this clause --

(1) "Landing areas means" --

(i) The primary surfaces, comprising the surface of the runway, runway shoulders, and lateral safety zones. The length of each primary surface is the same as the runway length. The width of each primary surface is 2,000 feet (1,000 feet on each side of the runway centerline);

(ii) The "clear zone" beyond the ends of each runway, i.e., the extension of the primary surface for a distance of 1,000 feet beyond each end of each runway;

(iii) All taxiways, plus the lateral clearance zones along each side for the length of the taxiways (the outer edge of

each lateral clearance zone is laterally 250 feet from the far or opposite edge of the taxiway, e.g., a 75-foot-wide taxiway would have a combined width of taxiway and lateral clearance zones of 425 feet); and

(iv) All aircraft parking aprons, plus the area 125 feet in width extending beyond each edge all around the aprons.

(2) "Safety precaution" areas means those portions of approach-departure clearance zones and transitional zones where placement of objects incident to contract performance might result in vertical projections at or above the approach-departure clearance, or the transitional surface.

(i) "The approach-departure clearance surface" is an extension of the primary surface and the clear zone at each end of each runway, for a distance of 50,000 feet, first along an inclined (glide angle) and then along a horizontal plane, both flaring symmetrically about the runway centerline extended.

(A) The inclined plane (glide angle) begins in the clear zone 200 feet past the end of the runway (and primary surface) at the same elevation as the end of the runway. It continues upward at a slope of 50:1 (1 foot vertically for each 50 feet horizontally) to an elevation of 500 feet above the established airfield elevation. At that point the plane becomes horizontal, continuing at that same uniform elevation to a point 50,000 feet longitudinally from the beginning of the inclined plane (glide angle) and ending there.

(B) The width of the surface at the beginning of the inclined plane (glide angle) is the same as the width of the clear zone. It then flares uniformly, reaching the maximum width of 16,000 feet at the end.

(ii) The "approach-departure clearance zone" is the ground area under the approach-departure clearance surface.

(iii) The "transitional surface" is a sideways extension of all primary surfaces, clear zones, and approach-departure clearance surfaces along inclined planes.

(A) The inclined plane in each case begins at the edge of the surface.

(B) The slope of the incline plane is 7:1 (1 foot vertically for each 7 feet horizontally). It continues to the point of intersection with the --

(1) Inner horizontal surface (which is the horizontal plane 150 feet above the established airfield elevation); or

(2) Outer horizontal surface (which is the horizontal plane 500 feet above the established airfield elevation), whichever is applicable.

(iv) The "transitional zone" is the ground area under the transitional surface. (It adjoins the primary surface, clear zone, and approach-departure clearance zone.)

(b) General. (1) The Contractor shall comply with the requirements of this clause while --

(i) Operating all ground equipment (mobile or stationary);

(ii) Placing all materials; and

(iii) Performing all work, upon and around all airfields.

(2) The requirements of this clause are in addition to any other safety requirements of this contract.

(c) The Contractor shall -

(1) Report to the Contracting Officer before initiating any work;

(2) Notify the Contracting Officer of proposed changes to locations and operations;

(3) Not permit either its equipment or personnel to use any runway for purposes other than aircraft operation without permission of the Contracting Officer, unless the runway is -

(i) Closed by order of the Contracting Officer; and

(ii) Marked as provided in paragraph (d)(2) of this clause;

(4) Keep all paved surfaces, such as runways, taxiways, and hardstands, clean at all times and, specifically, free from small stones which might damage aircraft propellers or jet aircraft;

(5) Operate mobile equipment according to the safety provisions of this clause, while actually performing work on the airfield. At all other times, the Contractor shall remove all mobile equipment to locations -

(i) Approved by the Contracting Officer;

(ii) At a distance of at least 750 feet from the runway centerline, plus any additional distance; and

(iii) Necessary to ensure compliance with the other provisions of this clause; and

(6) Not open a trench unless material is on hand and ready for placing in the trench. As soon as practicable after material has been placed and work approved, the Contractor shall backfill and compact trenches as required by the contract. Meanwhile, all hazardous conditions shall be marked and lighted in accordance with the other provisions of this clause.

(d) Landing areas. The Contractor shall -

(1) Place nothing upon the landing areas without the authorization of the Contracting Officer;

(2) Outline those landing areas hazardous to aircraft, using (unless otherwise authorized by the Contracting Officer) red flags by day, and electric, battery-operated low-intensity red flasher lights by night;

(3) Obtain, at an airfield where flying is controlled, additional permission from the control tower operator every time before entering any landing area, unless the landing area is marked as hazardous in accordance with paragraph (d)(2) of this clause;

(4) Identify all vehicles it operates in landing areas by means of a flag on a staff attached to, and flying above, the vehicle. The flag shall be three feet square, and consist of a checkered pattern of international orange and white squares of 1 foot on each side (except that the flag may vary up to ten percent from each of these dimensions);

(5) Mark all other equipment and materials in the landing areas, using the same marking devices as in paragraph (d)(2) of this clause; and

(6) Perform work so as to leave that portion of the landing area which is available to aircraft free from hazards, holes, piles of material, and projecting shoulders that might damage an airplane tire.

(e) Safety precaution areas. The Contractor shall -

(1) Place nothing upon the safety precaution areas without authorization of the Contracting Officer;

(2) Mark all equipment and materials in safety precaution areas, using (unless otherwise authorized by the Contracting Officer) red flags by day, and electric, battery-operated, low-intensity red flasher lights by night; and

(3) Provide all objects placed in safety precaution areas with a red light or red lantern at night, if the objects project above the approach-departure clearance surface or above the transitional surface.

252.242-7000 POSTAWARD CONFERENCE (DEC 1991)

The Contractor agrees to attend any postaward conference convened by the contracting activity or contract administration office in accordance with Federal Acquisition Regulation subpart 42.5.

(End of clause)

252.243-7001 PRICING OF CONTRACT MODIFICATIONS (DEC 1991)

When costs are a factor in any price adjustment under this contract, the contract cost principles and procedures in FAR part 31 and DFARS part 231, in effect on the date of this contract, apply.

252.243-7002 REQUESTS FOR EQUITABLE ADJUSTMENT (MAR 1998)

(a) The amount of any request for equitable adjustment to contract terms shall accurately reflect the contract adjustment for which the Contractor believes the Government is liable. The request shall include only costs for performing the change, and shall not include any costs that already have been reimbursed or that have been separately claimed. All indirect costs included in the request shall be properly allocable to the change in accordance with applicable acquisition regulations.

(b) In accordance with 10 U.S.C. 2410(a), any request for equitable adjustment to contract terms that exceeds the simplified acquisition threshold shall bear, at the time of submission, the following certificate executed by an individual authorized to certify the request on behalf of the Contractor:

I certify that the request is made in good faith, and that the supporting data are accurate and complete to the best of my knowledge and belief.

(Official's Name)

(Title)

(c) The certification in paragraph (b) of this clause requires full disclosure of all relevant facts, including--

(1) Cost or pricing data if required in accordance with subsection 15.403-4 of the Federal Acquisition Regulation (FAR); and

(2) Information other than cost or pricing data, in accordance with subsection 15.403-3 of the FAR, including actual cost data and data to support any estimated costs, even if cost or pricing data are not required.

(d) The certification requirement in paragraph (b) of this clause does not apply to----

(1) Requests for routine contract payments; for example, requests for payment for accepted supplies and services, routine vouchers under a cost-reimbursement type contract, or progress payment invoices; or

(2) Final adjustment under an incentive provision of the contract.

252.245-7001 REPORTS OF GOVERNMENT PROPERTY (MAY 1994)

(a) The Contractor shall provide an annual report --

(1) For all DoD property for which the Contractor is accountable under the contract;

(2) Prepared in accordance with the requirements of DD Form 1662, DoD Property in the Custody of Contractors, or approved substitute, including instructions on the reverse side of the form;

(3) In duplicate, to the cognizant Government property administrator, no later than October 31.

(b) The Contractor is responsible for reporting all Government property accountable to this contract, including that at subcontractor and alternate locations.

(End of clause)

252.247-7023 TRANSPORTATION OF SUPPLIES BY SEA (MAY 2002)

(a) Definitions. As used in this clause --

(1) "Components" means articles, materials, and supplies incorporated directly into end products at any level of manufacture, fabrication, or assembly by the Contractor or any subcontractor.

(2) "Department of Defense" (DoD) means the Army, Navy, Air Force, Marine Corps, and defense agencies.

(3) "Foreign flag vessel" means any vessel that is not a U.S.-flag vessel.

(4) "Ocean transportation" means any transportation aboard a ship, vessel, boat, barge, or ferry through international waters.

(5) "Subcontractor" means a supplier, materialman, distributor, or vendor at any level below the prime contractor whose contractual obligation to perform results from, or is conditioned upon, award of the prime contract and who is performing any part of the work or other requirement of the prime contract.

(6) "Supplies" means all property, except land and interests in land, that is clearly identifiable for eventual use by or owned by the DoD at the time of transportation by sea.

(i) An item is clearly identifiable for eventual use by the DoD if, for example, the contract documentation contains a reference to a DoD contract number or a military destination.

(ii) "Supplies" includes (but is not limited to) public works; buildings and facilities; ships; floating equipment and vessels of every character, type, and description, with parts, subassemblies, accessories, and equipment; machine tools; material; equipment; stores of all kinds; end items; construction materials; and components of the foregoing.

(7) "U.S.-flag vessel" means a vessel of the United States or belonging to the United States, including any vessel registered or having national status under the laws of the United States.

(b)(1) The Contractor shall use U.S.-flag vessels when transporting any supplies by sea under this contract.

(2) A subcontractor transporting supplies by sea under this contract shall use U.S.-flag vessels if--

(i) This contract is a construction contract; or

(ii) The supplies being transported are--

(A) Noncommercial items; or

(B) Commercial items that--

(1) The Contractor is reselling or distributing to the Government without adding value (generally, the Contractor does not add value to items that it contracts for f.o.b. destination shipment);

(2) Are shipped in direct support of U.S. military contingency operations, exercises, or forces deployed in humanitarian or peacekeeping operations; or

(3) Are commissary or exchange cargoes transported outside of the Defense Transportation System in accordance with 10 U.S.C. 2643.

(c) The Contractor and its subcontractors may request that the Contracting Officer authorize shipment in foreign-flag vessels, or designate available U.S.-flag vessels, if the Contractor or a subcontractor believes that --

(1) U.S.-flag vessels are not available for timely shipment;

(2) The freight charges are inordinately excessive or unreasonable; or

(3) Freight charges are higher than charges to private persons for transportation of like goods.

(d) The Contractor must submit any request for use of other than U.S.-flag vessels in writing to the Contracting Officer at least 45 days prior to the sailing date necessary to meet its delivery schedules. The Contracting Officer will process requests submitted after such date(s) as expeditiously as possible, but the Contracting Officer's failure to grant approvals to meet the shipper's sailing date will not of itself constitute a compensable delay under this or any other clause of this contract. Requests shall contain at a minimum --

(1) Type, weight, and cube of cargo;

(2) Required shipping date;

(3) Special handling and discharge requirements;

(4) Loading and discharge points;

(5) Name of shipper and consignee;

(6) Prime contract number; and

(7) A documented description of efforts made to secure U.S.-flag vessels, including points of contact (with names and telephone numbers) with at least two U.S.-flag carriers contacted. Copies of telephone notes, telegraphic and facsimile message or letters will be sufficient for this purpose.

(e) The Contractor shall, within 30 days after each shipment covered by this clause, provide the Contracting Officer and the Maritime Administration, Office of Cargo Preference, U.S. Department of Transportation, 400 Seventh Street SW., Washington, DC 20590, one copy of the rated on board vessel operating carrier's ocean bill of lading, which shall contain the following information:

(1) Prime contract number;

(2) Name of vessel;

(3) Vessel flag of registry;

(4) Date of loading;

(5) Port of loading;

(6) Port of final discharge;

(7) Description of commodity;

(8) Gross weight in pounds and cubic feet if available;

(9) Total ocean freight in U.S. dollars; and

(10) Name of the steamship company.

(f) The Contractor shall provide with its final invoice under this contract a representation that to the best of its knowledge and belief--

(1) No ocean transportation was used in the performance of this contract;

(2) Ocean transportation was used and only U.S.-flag vessels were used for all ocean shipments under the contract;

(3) Ocean transportation was used, and the Contractor had the written consent of the Contracting Officer for all non-U.S.-flag ocean transportation; or

(4) Ocean transportation was used and some or all of the shipments were made on non-U.S.-flag vessels without the written consent of the Contracting Officer. The Contractor shall describe these shipments in the following format:

ITEM DESCRIPTION	CONTRACT LINE ITEMS	QUANTITY

TOTAL_____

(g) If the final invoice does not include the required representation, the Government will reject and return it to the Contractor as an improper invoice for the purposes of the Prompt Payment clause of this contract. In the event there has been unauthorized use of non-U.S.-flag vessels in the performance of this contract, the Contracting Officer is entitled to equitably adjust the contract, based on the unauthorized use.

(h) In the award of subcontracts for the types of supplies described in paragraph (b)(2) of this clause, the Contractor shall flow down the requirements of this clause as follows:

(1) The Contractor shall insert the substance of this clause, including this paragraph (h), in subcontracts that exceed the simplified acquisition threshold in part 2 of the Federal Acquisition Regulation.

(2) The Contractor shall insert the substance of paragraphs (a) through (e) of this clause, and this paragraph (h), in subcontracts that are at or below the simplified acquisition threshold in part 2 of the Federal Acquisition Regulation.

(End of clause)

252.247-7024 NOTIFICATION OF TRANSPORTATION OF SUPPLIES BY SEA (MAR 2000)

(a) The Contractor has indicated by the response to the solicitation provision, Representation of Extent of Transportation by Sea, that it did not anticipate transporting by sea any supplies. If, however, after the award of this contract, the Contractor learns that supplies, as defined in the Transportation of Supplies by Sea clause of this contract, will be transported by sea, the Contractor --

(1) Shall notify the Contracting Officer of that fact; and

(2) Hereby agrees to comply with all the terms and conditions of the Transportation of Supplies by Sea clause of this contract.

(b) The Contractor shall include this clause; including this paragraph (b), revised as necessary to reflect the relationship of the contracting parties--

(1) In all subcontracts under this contract, if this contract is a construction contract; or

(2) If this contract is not a construction contract, in all subcontracts under this contract that are for--

(i) Noncommercial items; or

(ii) Commercial items that--

(A) The Contractor is reselling or distributing to the Government without adding value (generally, the Contractor does not add value to items that it subcontracts for f.o.b. destination shipment);

(B) Are shipped in direct support of U.S. military contingency operations, exercises, or forces deployed in humanitarian or peacekeeping operations; or

(C) Are commissary or exchange cargoes transported outside of the Defense Transportation System in accordance with 10 U.S.C. 2643.

(End of clause)

Section 00800 - Special Contract Requirements

CLAUSES INCORPORATED BY FULL TEXT

52.211-10 COMMENCEMENT, PROSECUTION, AND COMPLETION OF WORK (APR 1984)

The Contractor shall be required to (a) commence work under this contract within 10 calendar days after the date the Contractor receives the notice to proceed, (b) prosecute the work diligently, and (c) complete the entire work ready for use not later than 365 calendar days after Notice to Proceed. The time stated for completion shall include final cleanup of the premises.

(End of clause)

52.211-12 LIQUIDATED DAMAGES--CONSTRUCTION (SEP 2000)

(a) If the Contractor fails to complete the work within the time specified in the contract, the Contractor shall pay liquidated damages to the Government in the amount of $3,960.52 for each calendar day of delay until the work is completed or accepted.

(b) If the Government terminates the Contractor's right to proceed, liquidated damages will continue to accrue until the work is completed. These liquidated damages are in addition to excess costs of repurchase under the Termination clause.

(End of clause)

52.217-7 OPTION FOR INCREASED QUANTITY--SEPARATELY PRICED LINE ITEM (MAR 1989)

The Government may require the delivery of the numbered line item, identified in the Schedule as an option item, in the quantity and at the price stated in the Schedule. The Contracting Officer may exercise the option by written notice to the Contractor within 90 calendar days of award of contract. Delivery of added items shall continue at the same rate that like items are called for under the contract, unless the parties otherwise agree.

(End of clause)

52.223-9 ESTIMATE OF PERCENTAGE OF RECOVERED MATERIAL CONTENT FOR EPA-DESIGNATED PRODUCTS (AUG 2000)

(a) Definitions. As used in this clause--

Postconsumer material means a material or finished product that has served its intended use and has been discarded for disposal or recovery, having completed its life as a consumer item. Postconsumer material is a part of the broader category of “recovered material.”

Recovered material means waste materials and by-products recovered or diverted from solid waste, but the term does not include those materials and by-products generated from, and commonly reused within, an original manufacturing process.

(b) The Contractor, on completion of this contract, shall--

(1) Estimate the percentage of the total recovered material used in contract performance, including, if applicable, the percentage of postconsumer material content; and

(2) Submit this estimate to

US Army Corps of Engineers
Savannah District
ATTN: CESAS-CT-C
100 West Oglthorpe Avenue
Savannah, Georgia 31402

(End of clause)

52.223-4002 U.S. ARMY CORPS OF ENGINEERS SAFETY AND HEALTH REQUIREMENTS MANUAL, EM 385-1-1

This paragraph applies to contracts and purchase orders that require the contractor to comply with EM 385-1-1 (e.g., contracts that include the Accident Prevention clause at FAR 52.236-13 and/or other safety provisions). EM 385-1-1 and its changes are available at http://www.hq.usace.army.mil. (At the HQ homepage, select Safety and Occupational Health.) The Contractor shall be responsible for complying with the current edition and all changes posted on the web through the date that is 10 calendar days prior to the date offers are due. If the solicitation is amended to extend the time set for receipt of offers, the 10 calendar days rule stated above shall be applied against the amended date. (For example, if offers are due on 10 April, all changes posted on or before 31 March shall apply to the contract. If the time for receipt of offers is extended from 10 April to 20 April, all changes posted on or before 10 April shall apply to the contract.)

52.228-4002 REQUIRED INSURANCE (FEB 1987 SAS) (Ref. FAR 28.307)

(a) The Contractor shall procure and maintain during the entire period of his performance under this contract the following minimum insurance:

Comprehensive and Employer's Liability Insurance in the amount required by the State law in which the work is to be performed under this contract.

Comprehensive General Liability Insurance in an amount not less than $500,000 per accident.

Automobile Liability Insurance: $200,000 per person and $500,000 per accident for bodily injury liability and $20,000 property damage liability.

(b) Prior to the commencement of work hereunder, the Contractor shall furnish to the Contracting Officer a certificate or written statement of the above-required insurance. The policies evidencing required insurance shall contain an endorsement to the effect that cancellation, or any material change in the policies adversely affecting the interests of the Government in such insurance, shall not be effective for such period as may be prescribed by the laws of the State in which this contract is to be performed and in no event less than 30 days after written notice thereof to the Contracting Officer.

(c) The Contractor agrees to insert the substance of this clause, including this subparagraph (c), in all subcontracts hereunder.

(End of clause)

52.231-5000 EQUIPMENT OWNERSHIP AND OPERATING EXPENSE SCHEDULE
MAR 1995)--EFARS

(a) This clause does not apply to terminations. See 52.249-5000, Basis for Settlement of Proposals and FAR Part 49.

(b) Allowable cost for construction and marine plant and equipment in sound workable condition owned or controlled and furnished by a contractor or subcontractor at any tier shall be based on actual cost data for each piece of equipment or groups of similar serial and series for which the Government can determine both ownership and operating costs from the contractor's accounting records. When both ownership and operating costs cannot be determined for any piece of equipment or groups of similar serial or series equipment from the contractor's accounting records, costs for that equipment shall be based upon the applicable provisions of EP 1110-1-8, Construction Equipment Ownership and Operating Expense Schedule, Region ____. Working conditions shall be considered to be average for determining equipment rates using the schedule unless specified otherwise by the contracting officer. For equipment not included in the schedule, rates for comparable pieces of equipment may be used or a rate may be developed using the formula provided in the schedule. For forward pricing, the schedule in effect at the time of negotiations shall apply. For retroactive pricing, the schedule in effect at the time the work was performed shall apply.

(c) Equipment rental costs are allowable, subject to the provisions of FAR 31.105(d)(ii) and FAR 31.205-36. Rates for equipment rented from an organization under common control, lease-purchase arrangements, and sale-leaseback arrangements, will be determined using the schedule, except that actual rates will be used for equipment leased from an organization under common control that has an established practice of leasing the same or similar equipment to unaffiliated lessees.

(d) When actual equipment costs are proposed and the total amount of the pricing action exceeds the small purchase threshold, the contracting officer shall request the contractor to submit either certified cost or pricing data, or partial/limited data, as appropriate. The data shall be submitted on Standard Form 1411, Contract Pricing Proposal Cover Sheet.

(End of clause)

52.232-4007 ACCOUNTING AND APPROPRIATION DATA (APR 1989 CESAS-RM)

See Section 00100, Instructions, Conditions, and Notice to Bidders

(End of clause)

52.232-4008 DESIGNATED BILLING OFFICE (APR 1989 CESAS-RM)

Invoices will be mailed to:

US Army Corps of Engineers
Seymour Johnson Air Force Base
Resident Engineer (CD-PSJ)
Post Office Box 10508
Goldsboro, North Carolina 27532-0508

(End of Clause)

52.232-4009 DESIGNATED PAYMENT OFFICE (AUG 1998 CESAS-RM-F)

Payment will be made by:
U.S. Army Corps of Engineers Finance Center
ATTN: CEFC-AO-P
5720 Integrity Drive
Millington, TN 38054-5005
(End of clause)

52.232-5000 PAYMENT FOR MATERIALS DELIVERED OFF-SITE (MAR 1995)—EFARS

(a) Pursuant to FAR clause 52.232-5, Payments Under Fixed Priced Construction Contracts, materials delivered to the contractor at locations other than the site of the work may be taken into consideration in making payments if included in payment estimates and if all the conditions of the General Provisions are fulfilled. Payment for items delivered to locations other than the work site will be limited to: (1) materials required by the technical provisions; or (2) materials that have been fabricated to the point where they are identifiable to an item of work required under this contract.

(b) Such payment will be made only after receipt of paid or receipted invoices or invoices with canceled check showing title to the items in the prime contractor and including the value of material and labor incorporated into the item. In addition to petroleum products, payment for materials delivered off-site is limited to the following items: NONE

(End of clause)

52.236-4 PHYSICAL DATA (APR 1984)

Data and information furnished or referred to below is for the Contractor's information. The Government shall not be responsible for any interpretation of or conclusion drawn from the data or information by the Contractor.

The indications of physical conditions on the drawings and in the specifications are the result of site investigations by soil test borings. Locations and drilling logs of the borings are shown on the contract drawings.

(End of clause)

52.236-14 AVAILABILITY AND USE OF UTILITY SERVICES (APR 1984)

(a) The Government shall make all reasonably required amounts of utilities available to the Contractor from existing outlets and supplies, as specified in the contract. Unless otherwise provided in the contract, the amount of each utility service consumed shall be charged to or paid for by the Contractor at prevailing rates charged to the Government or, where the utility is produced by the Government, at reasonable rates determined by the Contracting Officer. The Contractor shall carefully conserve any utilities furnished without charge.

(b) The Contractor, at its expense and in a workmanlike manner satisfactory to the Contracting Officer, shall install and maintain all necessary temporary connections and distribution lines, and all meters required to measure the amount of each utility used for the purpose of determining charges. Before final acceptance of the work by the Government, the Contractor shall remove all the temporary connections, distribution lines, meters, and associated paraphernalia.

(End of clause)

52.236-4013 CONTRACTOR-PREPARED NETWORK ANALYSIS SYSTEM
(January 2002 SAS) (Ref. DFARS 236.273)

The progress chart to be prepared by the contractor pursuant to FAR 52.236-15, Schedules for Construction Contracts, shall utilize the Critical Path Method (CPM) of network calculation. (See Attachment 1 to Section 00800).

52.236-4015 PRECONSTRUCTION CONFERENCE (OCT 1988 SAS) (Ref. FAR 36.305)

(a) A preconstruction conference will be arranged by the Area/Resident Engineer after award of contract and before commencement of work. The Area/Resident Engineer will notify the Contractor of the time and date set for the meeting. At this conference, the Contractor shall be oriented with respect to Government procedures and line of authority, contractual, administrative, and construction matters.
(b) The Contractor shall bring to this conference, in completed form, a Certificate of Insurance, plus the following items in either completed or draft form:

Accident Prevention Plan (5 copies)
(use format shown in Attachment 1 to SECTION 00800)
Quality Control Plan (5 copies)
Letter Appointing Superintendent
Transmittal Register
Power of Attorney and Certified Copy of Resolution
Network Analysis System, when applicable
List of Subcontractors

(c) A letter of record will be written documenting all items discussed at the conference, and a copy will be furnished by the Area/Resident Engineer to all in attendance.

(End of clause)

52.236-4016 VIDEO TAPING OPERATING AND MAINTENANCE INSTRUCTIONS (MAR 1987 SASCD-SQ)

For all of the operating and maintenance instructions which are required in the contract specifications, the Contractor shall video tape these instructions as they are presented to the Government representatives. These tapes shall provide clear and understandable detailed instructions for all items required by the contract specifications. The tapes shall be prepared by an experienced video director/cameraman using good quality half-inch VHS color tape with correct sound equipment, lighting, and backdrop. The sound and picture quality shall be high and subject to approval by the Contracting Officer. The tapes are intended as followup training for other Government representatives at a later date. They must be suitable for this purpose. The Contractor shall be responsible for the contents of the instructions and shall verify that they are correct prior to taping. The Contractor may submit individual equipment manufacturer's instructional tape(s), provided they meet the above qualifications and cover the actual equipment that is installed. The tape(s) shall be for specific equipment identified by contents and contract name and number. The Contractor shall submit one copy of the tape(s) to the Contracting Officer for review and approval. Unacceptable tapes are to be corrected by the Contractor as indicated by the Contracting Officer at no additional cost to the Government.

(End of clause)

52.236-4017 SUBMITTAL OF MODIFICATION COST ESTIMATE PROPOSALS (MAR 1992 SAS)
(Ref. DFARS 52.236-7000)

When submittals of Cost Estimate Proposals are required for additions or deletions to work under this contract by modification, the Contractor shall use DA Form 5418-R titled "Cost Estimate Analysis" (see Attachment 1 to SECTION 00800). A separate assemblage will be prepared for submittal by each trade affected by the proposed work.
(End of clause)

52.246-12 INSPECTION OF CONSTRUCTION (AUG 1996)

(a) Definition. "Work" includes, but is not limited to, materials, workmanship, and manufacture and fabrication of components.

(b) The Contractor shall maintain an adequate inspection system and perform such inspections as will ensure that the work performed under the contract conforms to contract requirements. The Contractor shall maintain complete inspection records and make them available to the Government. All work shall be conducted under the general direction of the Contracting Officer and is subject to Government inspection and test at all places and at all reasonable times before acceptance to ensure strict compliance with the terms of the contract.

(c) Government inspections and tests are for the sole benefit of the Government and do not--

(1) Relieve the Contractor of responsibility for providing adequate quality control measures;

(2) Relieve the Contractor of responsibility for damage to or loss of the material before acceptance;

(3) Constitute or imply acceptance; or

(4) Affect the continuing rights of the Government after acceptance of the completed work under paragraph (i) of this section.

(d) The presence or absence of a Government inspector does not relieve the Contractor from any contract requirement, nor is the inspector authorized to change any term or condition of the specification without the Contracting Officer's written authorization.

(e) The Contractor shall promptly furnish, at no increase in contract price, all facilities, labor, and material reasonably needed for performing such safe and convenient inspections and tests as may be required by the Contracting Officer. The Government may charge to the Contractor any additional cost of inspection or test when work is not ready at the time specified by the Contractor for inspection or test, or when prior rejection makes reinspection or retest necessary. The Government shall perform all inspections and tests in a manner that will not unnecessarily delay the work. Special, full size, and performance tests shall be performed as described in the contract.

(f) The Contractor shall, without charge, replace or correct work found by the Government not to conform to contract requirements, unless in the public interest the Government consents to accept the work with an appropriate adjustment in contract price. The Contractor shall promptly segregate and remove rejected material from the premises.

(g) If the Contractor does not promptly replace or correct rejected work, the Government may (1) by contract or otherwise, replace or correct the work and charge the cost to the Contractor or (2) terminate for default the

Contractor's right to proceed.

(h) If, before acceptance of the entire work, the Government decides to examine already completed work by removing it or tearing it out, the Contractor, on request, shall promptly furnish all necessary facilities, labor, and material. If the work is found to be defective or nonconforming in any material respect due to the fault of the Contractor or its subcontractors, the Contractor shall defray the expenses of the examination and of satisfactory reconstruction. However, if the work is found to meet contract requirements, the Contracting Officer shall make an equitable adjustment for the additional services involved in the examination and reconstruction, including, if completion of the work was thereby delayed, an extension of time.

(i) Unless otherwise specified in the contract, the Government shall accept, as promptly as practicable after completion and inspection, all work required by the contract or that portion of the work the Contracting Officer determines can be accepted separately. Acceptance shall be final and conclusive except for latent defects, fraud, gross mistakes amounting to fraud, or the Government's rights under any warranty or guarantee.

(End of clause)

52.246-21 WARRANTY OF CONSTRUCTION (MAR 1994)

(a) In addition to any other warranties in this contract, the Contractor warrants, except as provided in paragraph (i) of this clause, that work performed under this contract conforms to the contract requirements and is free of any defect in equipment, material, or design furnished, or workmanship performed by the Contractor or any subcontractor or supplier at any tier.

(b) This warranty shall continue for a period of 1 year from the date of final acceptance of the work. If the Government takes possession of any part of the work before final acceptance, this warranty shall continue for a period of 1 year from the date the Government takes possession.

(c) The Contractor shall remedy at the Contractor's expense any failure to conform, or any defect. In addition, the Contractor shall remedy at the Contractor's expense any damage to Government-owned or controlled real or personal property, when that damage is the result of--

(1) The Contractor's failure to conform to contract requirements; or

(2) Any defect of equipment, material, workmanship, or design furnished.

(d) The Contractor shall restore any work damaged in fulfilling the terms and conditions of this clause. The Contractor's warranty with respect to work repaired or replaced will run for 1 year from the date of repair or replacement.

(e) The Contracting Officer shall notify the Contractor, in writing, within a reasonable time after the discovery of any failure, defect, or damage.

(f) If the Contractor fails to remedy any failure, defect, or damage within a reasonable time after receipt of notice, the Government shall have the right to replace, repair, or otherwise remedy the failure, defect, or damage at the Contractor's expense.
(g) With respect to all warranties, express or implied, from subcontractors, manufacturers, or suppliers for work performed and materials furnished under this contract, the Contractor shall--

(1) Obtain all warranties that would be given in normal commercial practice;

(2) Require all warranties to be executed, in writing, for the benefit of the Government, if directed by the Contracting Officer; and

(3) Enforce all warranties for the benefit of the Government, if directed by the Contracting Officer.

(h) In the event the Contractor's warranty under paragraph (b) of this clause has expired, the Government may bring suit at its expense to enforce a subcontractor's, manufacturer's, or supplier's warranty.

(i) Unless a defect is caused by the negligence of the Contractor or subcontractor or supplier at any tier, the Contractor shall not be liable for the repair of any defects of material or design furnished by the Government nor for the repair of any damage that results from any defect in Government-furnished material or design.

(j) This warranty shall not limit the Government's rights under the Inspection and Acceptance clause of this contract with respect to latent defects, gross mistakes, or fraud.

(End of clause)

52.249-4001 TIME EXTENSIONS FOR UNUSUALLY SEVERE WEATHER (APR 1991 OCE)
(Ref. FAR 52.249-10)

(a) This provision specifies the procedure for the determination of time extensions for unusually severe weather in accordance with the contract clause entitled DEFAULT (FIXED-PRICE CONSTRUCTION). In order for the Contracting Officer to award a time extension under this clause, the following conditions must be satisfied:

(1) The weather experienced at the project site during the contract period must be found to be unusually severe, that is, more severe than the adverse weather anticipated for the project location during any given month.

(2) The unusually severe weather must actually cause a delay to the completion of the project. The delay must be beyond the control and without the fault or negligence of the Contractor.

(b) The following schedule of monthly anticipated adverse weather delays is based on National Oceanic and Atmospheric Administration (NOAA) or similar data for the project location and will constitute the base line for monthly weather time evaluations. The Contractor's progress schedule must reflect these anticipated adverse weather delays in all weather dependent activities.

MONTHLY ANTICIPATED ADVERSE WEATHER DELAY
WORKDAYS BASED ON 5-DAY WORK WEEK

JAN	FEB	MAR	APR	MAY	JUN	JUL	AUG	SEP	OCT	NOV	DEC
10	9	6	4	5	6	8	7	4	4	5	9

(c) Upon acknowledgment of the Notice to Proceed and continuing through-out the contract, the Contractor will record on the daily Contractor Quality Control report the occurrence of adverse weather and resultant impact to normally scheduled work. Actual adverse weather delay days must prevent work on critical activities for 50 percent or more of the Contractor's scheduled workday. The number of actual adverse weather delay days shall include days impacted by actual adverse weather (even if adverse weather occurred in previous month), be calculated chronologically from the first to the last day in each month, and be recorded as full days. If the number of actual adverse weather delay days exceeds the number of days anticipated in paragraph (b) above, the Contracting Officer will convert any qualifying delays to calendar days, giving full consideration for equivalent fair weather workdays, and issue a modification in accordance with the contract clause entitled DEFAULT (FIXED PRICE CONSTRUCTION).
(End of clause)

52.249-5000 BASIS FOR SETTLEMENT OF PROPOSALS - EFARS

Actual costs will be used to determine equipment costs for a settlement proposal submitted on the total cost basis under FAR 49.206-2(b). In evaluating a terminations settlement proposal using the total cost basis, the following principles will be applied to determine allowable equipment costs:

(1) Actual costs for each piece of equipment, or groups of similar serial or series equipment, need not be available in the contractor's accounting records to determine total actual equipment costs.

(2)If equipment costs have been allocated to a contract using predetermined rates , those charges will be adjusted to actual costs.

(3) Recorded job costs adjusted for unallowable expenses will be used to determine equipment operating expenses.

(4) Ownership costs (depreciation) will be determined using the contractor's depreciation schedule (subject to the provisions of FAR 31.205-11).

(5) License, taxes, storage and insurance costs are normally recovered as an indirect expense and unless the contractor charges these costs directly to contracts, they will be recovered through the indirect expense rate.
(End of Clause)

ATTACHMENT 1 TO SECTION 00800

LIST OF ATTACHMENTS

1. Contract Drawings:

   File No. 721-312-05, Sheets 1 through 119

2. Rates of Wages:

3. Formats:

   Air Force Project Sign

   Corps of Engineers Logo

   Accident Prevention Plan (Ref. FAR 52.236-13 and EM 385-1-1)

   Construction Quality Control Report

   Weekly Temporary Electrical Inspection

4. Minimum Standard for Temporary Electrical Service (Ref. FAR 52.236-14)

5. Forms:

   SAS Form 9 - Activity Hazard Analysis

   SAD Form 1666a-R - Safety Checklist for Crawler, Truck & Wheel Mounted Cranes

   SAD Form 1666b-R - Safety Checklist for Portal, Tower, and Pillar Cranes

   SAD Form 1666c-R - Safety Checklist for Rigging

   SAD Form 1666d-R - Safety Checklist for Motor Vehicles, Trailers and Trucks

   SAD Form 1666e-R - Safety Checklist for Crawler Tractors and Dozers

   SAD Form 1666f-R - Safety Checklist for Scrapers, Motor Graders, and Other Mobile Equipment

   SAD Form 1666g-R - Safety Checklist for Material Hoists

   SAD Form 1666h-R - Safety Checklist for Earth Drilling Equipment

   ENG Form 4025 - Transmittal of Shop Drawings, Equipment Data, Material Samples, or Manufacturer's Certificates of Compliance

   DA Form 5418-R - Cost Estimate Analysis

   DD Form 1354 - Transfer and Acceptance of Military Real Property

   Standard Form LLL-A - Disclosure of Lobbying Activities

   Real Property Inventory

General Decision Number NC030053 06/13/2003 NC53

Superseded General Decision No. NC020053

State: North Carolina

Construction Type:
BUILDING

County(ies):
WAYNE

BUILDING CONSTRUCTION PROJECTS (does not include residential construction consisting of single family homes and apartments up to and including 4 stories)

Modification Number	Publication Date
0	06/13/2003

COUNTY(ies):
WAYNE

SUNC1032A 03/13/1997

	Rates	Fringes
ACOUSTICAL CEILING MECHANIC	11.50	.43
CARPENTER (Excluding formwork,batt/ blown insulation, acoustical ceiling installation, carpet laying, overhead doors, and drywall hanging	10.62	1.08
CEMENT MASON	10.66	.95
DRYWALL FINISHER	12.00	
DRYWALL HANGER	12.00	.63
ELECTRICIAN (Excluding HVAC control wiring)	10.88	.93
GLAZIER	10.41	1.42
HVAC MECHANIC	13.75	1.13
IRONWORKER-STRUCTURAL	10.15	.97
LABORERS:		
Unskilled	6.95	
Landscape Worker	7.31	
OVERHEAD DOOR INSTALLER	9.50	.52
PAINTER (including paperhanging, excluding drywall finishing	9.00	.35
PLUMBER (Excluding HVAC piping)	11.59	1.67
POWER EQUIPMENT OPERATORS:		
Backhoe	10.00	
Dozer	10.00	

Grader	13.83	
ROOFER	8.42	.26
SHEETMETAL WORKER (Excluding HVAC duct work)	10.34	1.06
TRUCK DRIVER-TANDEM DUMP	10.00	

WELDERS - Receive rate prescribed for craft performing operation

to which welding is incidental.

==========

Unlisted classifications needed for work not included within the scope of the classifications listed may be added after award only as provided in the labor standards contract clauses (29 CFR 5.5(a)(1)(ii)).

In the listing above, the "SU" designation means that rates listed under that identifier do not reflect collectively bargained wage and fringe benefit rates. Other designations indicate unions whose rates have been determined to be prevailing.

WAGE DETERMINATION APPEALS PROCESS

1.) Has there been an initial decision in the matter? This can be:

* an existing published wage determination
* a survey underlying a wage determination
* a Wage and Hour Division letter setting forth a position on a wage determination matter
* a conformance (additional classification and rate) ruling

On survey related matters, initial contact, including requests for summaries of surveys, should be with the Wage and Hour Regional Office for the area in which the survey was conducted because those Regional Offices have responsibility for the Davis-Bacon survey program. If the response from this initial contact is not satisfactory, then the process described in 2.) and 3.) should be followed.

With regard to any other matter not yet ripe for the formal process described here, initial contact should be with the Branch of Construction Wage Determinations. Write to:

Branch of Construction Wage Determinations
Wage and Hour Division
U. S. Department of Labor
200 Constitution Avenue, N. W.
Washington, D. C. 20210

2.) If the answer to the question in 1.) is yes, then an interested party (those affected by the action) can request review and reconsideration from the Wage and Hour Administrator (See 29 CFR Part 1.8 and 29 CFR Part 7). Write to:

Wage and Hour Administrator
U.S. Department of Labor

200 Constitution Avenue, N. W.
Washington, D. C. 20210

The request should be accompanied by a full statement of the interested party's position and by any information (wage payment data, project description, area practice material, etc.) that the requestor considers relevant to the issue.

3.) If the decision of the Administrator is not favorable, an interested party may appeal directly to the Administrative Review Board (formerly the Wage Appeals Board). Write to:

Administrative Review Board
U. S. Department of Labor
200 Constitution Avenue, N. W.
Washington, D. C. 20210

4.) All decisions by the Administrative Review Board are final.

END OF GENERAL DECISION

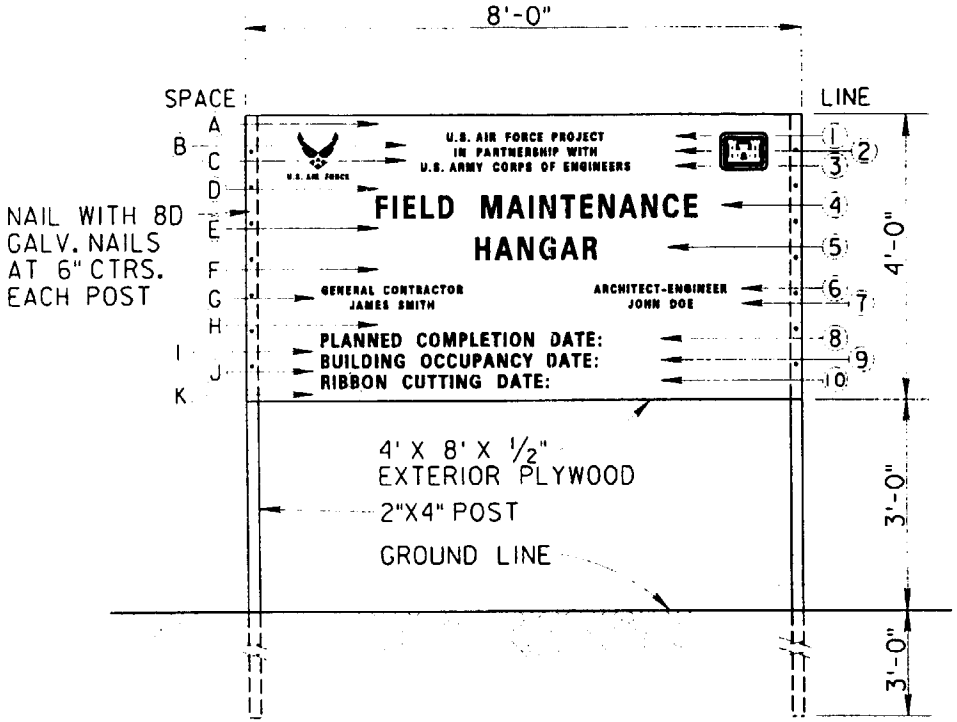

FRONT VIEW

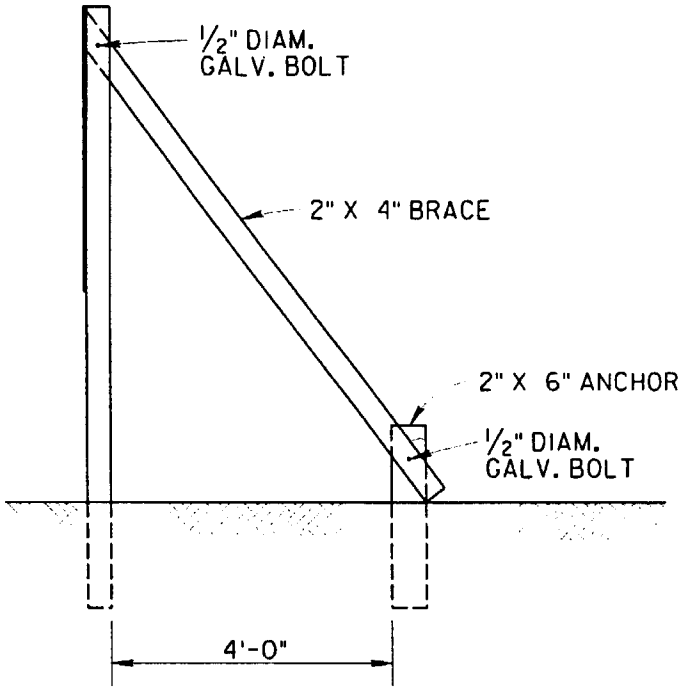

END VIEW

U.S. AIR FORCE PROJECT SIGN DETAILS

NOTES:

1. POSTS SHALL BE S4S.
2. PLYWOOD SHALL BE EXTERIOR TYPE, A-C GRADE.
3. BEFORE PAINTING, SURFACE SHALL BE CLEAN, DRY, FREE OF GREASE AND SANDED.
4. PAINT WITH ONE EXTERIOR OIL PRIME COAT AND EXTERIOR TYPE ALKYD, CONFORMING TO MASTER PAINTERS INSTITUTE MPI-9, MPI GLOSS LEVEL 6. COLOR SHALL MATCH SHERWIN WILLIAMS SW 2175.
5. ALL LETTERING SHALL BE EXTERIOR TYPE ALKYD. COLOR SHALL MATCH SHERWIN WILLIAMS SW 1900.
6. DECALOMANIA FOR CORPS OF ENGINEERS INSIGNIA AND U.S. AIR FORCE EMBLEM WILL BE FURNISHED BY THE CONTRACTING OFFICER FOR INSTALLATION BY THE CONTRACTOR.
7. ALL EXPOSED WOOD (POSTS, SUPPORTS, BACK, ETC.) SHALL BE PAINTED THE SAME BACKGROUND COLOR AS THE SIGN.
8. LETTERING STYLE SHALL BE EITHER HELIOS EXTRA BOLD CONDENSED, HELIOS BOLD II, HELVETICA BLACK ROMAN, OR HELVETICA BOLD ROMAN.

SCHEDULE

SPACE	HEIGHT	LINE	DESCRIPTION	LETTER HEIGHT	STROKE
A	3"	1	U.S. AIR FORCE PROJECT	1.5"	3/16"
B	1"	2	IN PARTNERSHIP WITH	1.5"	3/16"
C	1"	3	U.S. ARMY CORPS OF ENGINEERS	1.5"	3/16"
D	4"	4	PROJECT NAME	4"	1/2"
E	3"	5	PROJECT NAME CONT'D (IF REQ'D)	4"	1/2"
F	4"	6	GENERAL CONTRACTOR/A-E	1.5"	3/16"
G	1"	7	GENERAL CONTRACTOR/A-E	1.5"	3/16"
H	4"	8	PLANNED COMPLETION DATE	2.5"	1/4"
I	1"	9	BUILDING OCCUPANCY DATE	2.5"	1/4"
J	1"	10	RIBBON CUTTING DATE	2.5"	1/4"
K	2"				

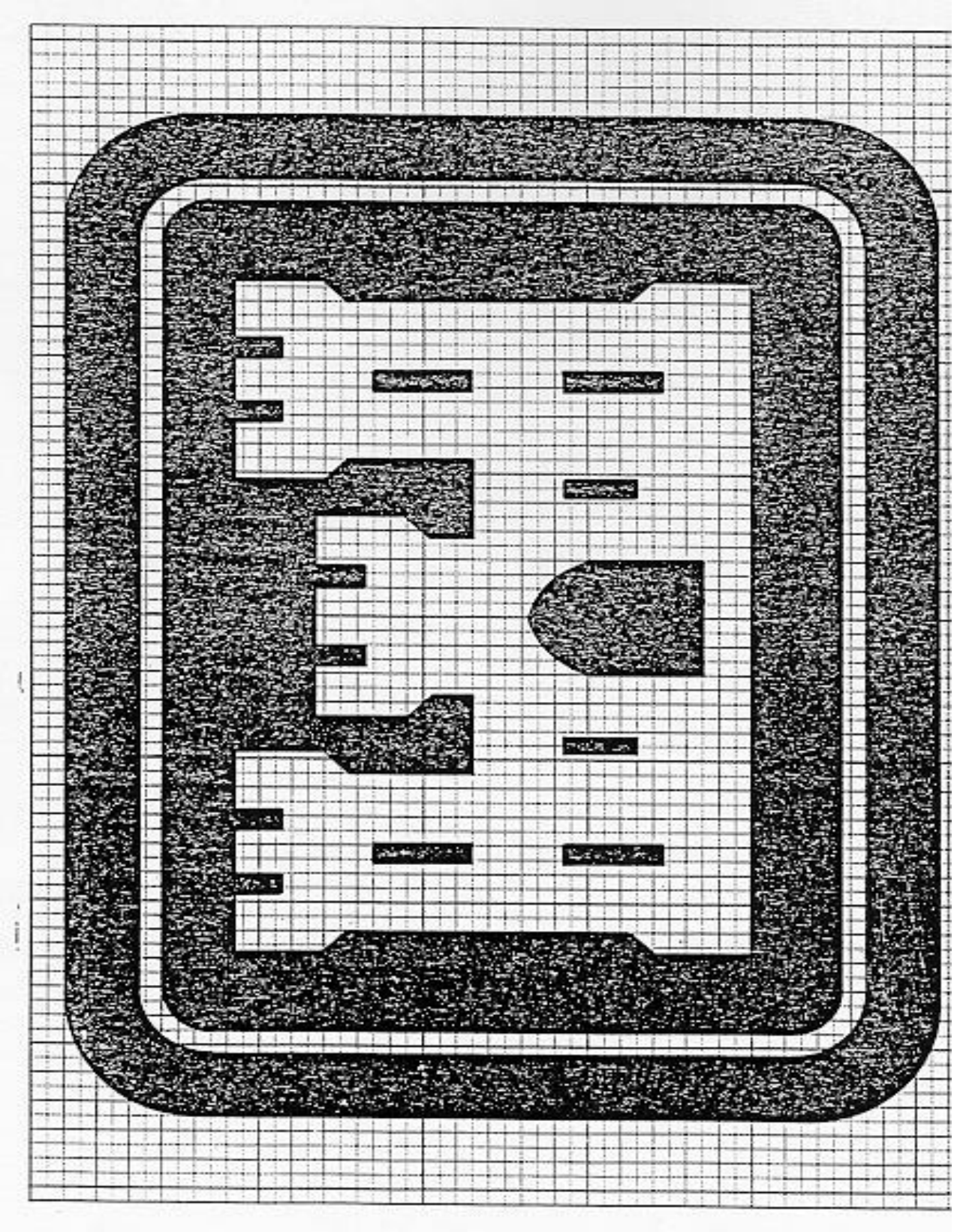

CORPS OF ENGINEERS LOGO
HALF SIZE

Last revised 9 May 97

FORMAT
(Ref. FAR 52.236-13 and EM 385-1-1 dated 3 Sep 96)
ACCIDENT PREVENTION PLAN

MINIMUM BASIC OUTLINE FOR ACCIDENT PREVENTION PLAN

An accident prevention plan is, in essence, a safety and health policy and program document. The following areas are typically addressed in an accident prevention plan, but a plan shall be job specific and shall also address any unusual or unique aspects of the project or activity for which it is written. The accident prevention plan shall interface with the employer's overall safety and health program. Any portions of the overall safety and health program that are referenced in the accident prevention plan shall be included as appropriate.

1. SIGNATURE SHEET. Title, signature, and phone number of the following:

a. Plan preparer (corporate safety staff person, QC);

b. Plan approval, e.g., owner, company president, regional vice president (HTRW activities require approval of a Certified Industrial Hygienist (or qualified Industrial Hygiene personnel for in-house USACE activities; a Certified Safety Professional (or qualified USACE safety personnel for in-house work) may approve the plan for operations involving UST removal where contaminants are known to be petroleum, oils, or lubricants);

c. Plan concurrence (provide concurrence of other applicable corporate and project personnel (contractor)), e.g., Corporate Chief of Operations, Corporate Chief of Safety, Corporate Industrial Hygienist, project manager or superintendent, project safety professional, project QC. The plan will be developed by qualified personnel (plan preparer) and will be signed by a competent person (plan concurrence) and a representative of the prime contractor's project management team (plan approval).

2. BACKGROUND INFORMATION. List the following:

a. Contractor;

b. Contract number;

c. Project name;

d. Brief project description, description of work to be performed, and location (map);

e. Contractor accident experience (provide information such as EMR, OSHA 200 Forms, corporate safety trend analyses);

f. Listing of phases of work and hazardous activities requiring activity hazards analyses.

3. STATEMENT OF SAFETY AND HEALTH POLICY. (In addition to the corporate policy statement, a copy of the corporate safety program may provide a

significant portion of the information required by the accident prevention plan.)

4. RESPONSIBILITIES AND LINES OF AUTHORITIES.

a. Identification and accountability of personnel responsible for safety - at both corporate and project level (contracts specifically requiring safety or industrial hygiene personnel should include a copy of their resume - the District Safety and Occupational Health Office will review the qualifications for acceptance). For items in EM 385-1-1 which require the use of a competent person or a qualified person, the contractor is to maintain documentation demonstrating the competence or qualification of that individual.

b. Lines of authority

5. SUBCONTRACTORS AND SUPPLIERS. Provide the following:

a. Identification of subcontractors and suppliers (if known);

b. Means for controlling and coordinating subcontractors and suppliers;

c. Safety responsibilities of subcontractors and suppliers.

6. TRAINING.

a. List subjects to be discussed with employees in safety indoctrination.

b. List mandatory training and certifications which are applicable to this project (e. g., explosive actuated tools, confined space entry, crane operator, diver, vehicle operator, HAZWOPER training and certification, personal protective equipment) and any requirements for periodic retraining/recertification.

c. Identify requirements for emergency response training.

d. Outline requirements (who attends, when given, who will conduct etc.) for supervisory and employee safety meetings.

e. Identify location at the project site where the records will be maintained.

7. SAFETY AND HEALTH INSPECTIONS. Provide details on:

a. Who will conduct safety inspections (e.g., project manager, safety professional, QC, supervisors, employees, etc.), when inspections will be conducted, how the inspections will be recorded, deficiency tracking system, follow-up procedures, etc;

b. Any external inspections/certifications which may be required (e.g., Coast Guard).

8. SAFETY AND HEALTH EXPECTATIONS, INCENTIVE PROGRAMS, AND COMPLIANCE.

a. The company's written safety program goals, objectives, and accident experience goals for this contract should be provided.

b. A brief description of the company's safety incentive programs (if any) should be provided.

c. Policies and procedures regarding noncompliance with safety requirements (to include disciplinary actions for violation of safety requirements) should be identified.

d. Provide written company procedures for holding managers and supervisors accountable for safety.

9. ACCIDENT REPORTING. The contractor shall identify who shall complete the following, how, and when:

a. Exposure data (man-hours worked);

b. Accident investigations, reports and logs;

c. Immediate notification of major accidents.

10. MEDICAL SUPPORT. Outline on-site medical support and off-site medical arrangements.

11. PERSONAL PROTECTIVE EQUIPMENT. Outline procedures (who, when, how) for conducting hazard assessments and written certifications for use of personal protective equipment.

12. PLANS (PROGRAMS, PROCEDURES) REQUIRED BY THE SAFETY MANUAL (as applicable).

a. Hazard communication program (01.B.04);

b. Emergency response plans:
- procedures and tests (01.E.01)
- spill plans (01.E.01, 06.A.02)
- fire fighting plan (01.E.01, 19.A.04)
- posting of emergency telephone numbers (01.E.04)
- wildfire prevention plan (09.K.01)
- man overboard/abandon ship (19.A.04)

c. Layout plans (04.A.01);

d. Respiratory protection plan (05.E.01);

e. Health hazard control program (06.A.02);

f. Lead abatement plan (06.B.05 & specifications);

g. Asbestos abatement plan (06.B.05 & specifications);

h. Abrasive blasting (06.H.01);

i. Confined space (06.1);

j. Hazardous energy control plan (12.A.07);

k. Critical lift procedures (16.C.17);

l. Contingency plan for severe weather (19.A.03);

m. Access and haul road plan (22.1.10);

n. Demolition plan (engineering and asbestos surveys) (23.A.01);

o. Emergency rescue (tunneling) (26.A.05);

p. Underground construction fire prevention and protection plan (26.D.01);

q. Compressed air plan (26.1.01);

r. Formwork and shoring erection and removal plans (27.B.02);

s. Lift slab plans (27.D.01);

t. SHP and SSHP (for HTRW work an SSHP must be submitted and shall contain all information required by the accident prevention plan - two documents are not required (28.B.01);

u. Blasting plan (29.A.01);

v. Diving plan (30.A.13);

w. Plan for prevention of alcohol and drug abuse (Defense Federal Acquisition Regulation Supplement Subpart 252.223-7004, Drug-Free Work Force).

13. The Contractor shall provide information on how they will meet the requirements of major sections of EM 385-1-1 in the accident prevention plan. Particular attention shall be paid to excavations, scaffolding, medical and first aid requirements, sanitation, personal protective equipment, fire prevention, machinery and mechanized equipment, electrical safety, public safety requirements, and chemical, physical agent, and biological occupational exposure prevention requirements. Detailed site-specific hazards and controls shall be provided in the activity hazard analysis for each phase of the operation. Site-specific hazards are those hazards which would be reasonably be anticipated to occur on the construction site of concern and will be identified through analysis of the activities to be performed. The controls are measures which will be implemented by the contractor to eliminate or reduce each hazard to an acceptable level.

F O R M A T

CONTRACTOR'S NAME
(Address)

CONSTRUCTION QUALITY CONTROL REPORT

Date: _____ Report No. _____

Contract No.: _____

Description and Location of Work: _____

WEATHER: (Clear)(P. Cloudy)(Cloudy); Temperature:___Min,___Max;
Rainfall ___Inches

Contractor/Subcontractors and Area of Responsibility
a._____
b._____
c._____
d._____
e._____
f._____
g._____
h._____

1. Work Performed Today:

(Indicate location and description of work performed. Refer to work performed by prime and/or subcontractors by letter in table above.)

_____

2. Results of Control Activities:

(Indicate whether: P-Preparatory, I-Initial, or F-Followup and include satisfactory work completed or deficiencies with action to be taken.)

_____

3. Test Required by Plans and/or Specifications Performed and Results of Tests:

_____

4. Monitoring of Materials and Equipment:

---

5. Offsite Surveillance Activities:

---

6. Job Safety:

(Daily comment required.)

---

7. Remarks:

a. (Cover any conflicts in plans, specifications or instructions.)

b. (Action taken in review of submittal.)

c. (Verbal instructions received.)

_____
Inspector

CONTRACTOR'S VERIFICATION:

The above report is complete and correct and all material and equipment used and work performed during this reporting period are in compliance with the contract plans and specifications except as noted above.

_____
Contractor's Approved
Authorized Representative

WEEKLY TEMPORARY ELECTRICAL INSPECTION

Week ending _____

Contract No. _____

Contract Description _____

The following items were inspected in accordance with requirements in National Electrical Code and Corps of Engineers Safety and Health Requirements Manual, EM 385-1-1.

1. Wire (size, type, condition).

2. Systems and devices (polarity, continuity of ground, resistance to ground).

3. Resistance of ground rods (25 OHMS) measured and recorded.

4. Check GFI for 15/20 amp 120 volt circuits.

5. Plugs and receptacles (type, NEMA rating).

6. Circuit breakers and disconnect (size, type, weatherproof).

7. Extension cords (type, UL listed, insulation condition, splices, location).

8. Open wiring on insulators, nonmetallic sheathed cable, outside clearance (600 volts or less), Festoon lighting (as applicable).

_____

Signature Electrician/Electrical Engineer

MINIMUM STANDARD FOR TEMPORARY ELECTRICAL SERVICE

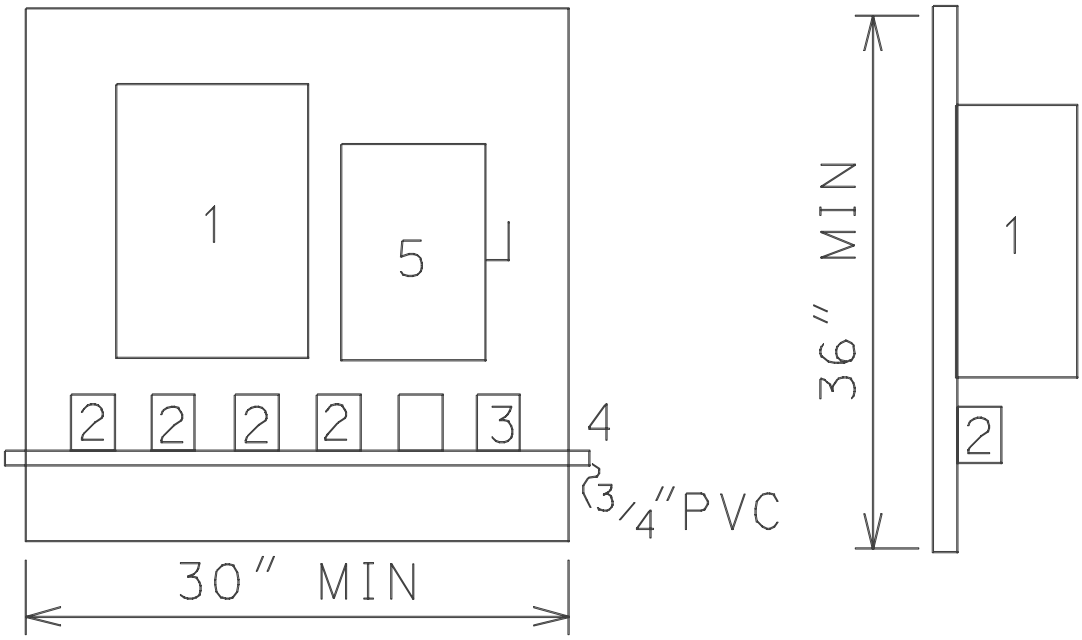

(DIMENSIONS ARE APPROXIMATE)

A. The backboard for temporary service shall consist of not less than 1/2 inch plywood of exterior grade.

B. Numbers above correspond to the item below:

Item 1 - NEMA 3R circuit breaker type panelboard. This panelboard shall consist of 1 two-pole 60 amp main circuit breaker, 4* one pole 20 AMP branch circuit breakers, and 1* two pole 20 AMP branch circuit breaker. Breakers shall meet Federal Specifications Standards for Class 1A breakers and shall be plug-in type. (*Number of breakers to be adjusted to suit the job requirements.)

Item 2 - Duplex grounding type convenience outlets in standard utility type outlet boxes with covers, meeting the NEC and NEMA requirements for wet locations. Connections to the branch circuit breakers shall be grounded by two conductors #12 NMC cable.

Item 3 – (Optional) A single three-conductor grounding type outlet rated for 250 volt service meeting the NEC and NEMA requirements for wet locations. Connections from this outlet to the two pole breaker shall be by two conductor grounded type NMC cable.

Item 4 - 3/4 inch PVC. This shall be used to support extension cords.

Item 5 – NEMA 3R service disconnect safety switch – 60 amp minimum.

C. The panelboard shall be grounded by #6 copper wire connected to a 3/4 inch by 10-foot long ground rod.

D. Service to the panel shall consist of three copper conductor #6 minimum service entrance cable. This cable may enter the top or side of the panelboard.

E. Periodic inspections of systems and devices will be made by the Contractor at intervals not to exceed 1 week, and a report will be submitted indicating the results.

F. All receptacle outlets that provide temporary electrical power during construction, remodeling, maintenance, repair, or demolition shall have ground-fault circuit-interrupter (CFCI) protection for personnel. GFCI protection shall be provided on all circuits serving portable electric hand tools or semi-portable electric power tools (such as block/brick saws, table saws, air compressors, welding machines, and drill presses). See EM 385-1-1 for exceptions.

G. Per EM 385-1-1 all temporary power distribution systems shall be submitted to the field office before installation.

ACTIVITY HAZARD ANALYSIS

1. Phase of Construction		
2. Location	3. Contract No.	4. Project
5. Prime Contractor	6. Date of Preparatory	7. Estimated Start Date
Potential Safety Hazard	Procedure to Control Hazard	
8. Contractor's Representative (signature)	9.	

SAS Form 9
1 Jan 82

SAFETY CHECKLIST FOR CRAWLER, TRUCK & WHEEL MOUNTED CRANES

Contract # and title:	
Equipment name & number: owned or leased?	
Contractor:	Subcontractor:
Contract Inspector:	Date inspected:

	Yes	No	N/A
1. Unless the manufacture has specified an on-rubber rating, outriggers will be fully extended and down? (16.D.10)			
2. Are lattice boom cranes equipped with a boom angle indicator, load indicating device, or a load moment indicator? (16.D.01)			
3. Are lattice boom and hydraulic cranes equipped with a means for the operator to visually determine levelness? (16.D.02)			
4. Are lattice boom and hydraulic cranes, except articulating booms cranes, equipped with drum rotation indicators located for use for the operator? (16.D.03)			
5. Are lattice boom and hydraulic mobile cranes equipped with a boom angle or radius indicator within the operator’s view? (16.D.04)			
6. Are lattice boom cranes, with exception of duty cycle cranes, equipped with an anti-two blocking device? (16.D.05)			
7. When duty cycle machines are required to make a non-duty lift, is the crane equipped with an international orange warning device and is a signal person present? (16.D 05)			
8. Are the following with the crane at all times: (16.C.02) a. the manufacturer’s operating manual? b. the load rating chart? c. the crane’s log book documenting use, maintenance, inspections and tests? d. operating manual for crane operator aids used on the crane.			

	Yes	No	N/A
9. Are the following on the project site: a. completed periodic inspection report prior to initial work? (16.C.12) b. pre-operational checklist used for daily inspection? (16.C.12) c. written reports of the operational performance test? (16.C.13) d. written reports of the load performance test? (16.C.13)			
10. Are all operators physically qualified to perform work? (16.C.05)			
11. Are all operators qualified by written and practical exam or by appropriate licensing agency for the type crane they are to operate? (16.C.05)			
12. Is the crane designed and constructed IAW the standards listed in Table 16-1? (16.C.06)			
13. Is a hazard analysis for set-up and set-down available? (16.C.08)			
14. Are accessible areas within the swing radius of the rear of the crane barricaded? (16.C.09)			
15. Are there at least 3 wraps of cable on the drum? (16.C.10)			
16. Are the hoisting ropes installed IAW the manufacturer’s recommendations? (16.C.10)			
17. Are critical lift plans available? (16.C.18)			
18. Are minimum clearance distance for high voltage lines posted at the operator’s position? (11.E.04)			
19. Do older lattice boom cranes with anti-two block warning devices in lieu of anti-two block prevention devices have a written exemption? (16.D.05)			
20. Is the slow moving emblem used on all vehicles which by design move at 25 MPH or less on public roads? (08.A.04)			
21. Are all vehicles which will be parked or moving slower than normal traffic on haul roads equipped with a yellow flashing light or flasher visible from all directions? (16.A.13)			

	Yes	No	N/A
22. Is all equipment to be operated on public roads provided with: (16A.07) a. headlights? b. brake lights? c. taillights? d. back-up lights? e. front and rear turn signals?			
23. Are seat and seat belts provided for the operator and each rider on equipment? (16.A.07 and 16.B.08)			
24. Is all equipment with windshields equipped with powered wipers and defogging or defrosting devices? (16.A.07)			
25. Is the glass in the windshield or other windows clear and unbroken to provide adequate protection and visiblity for the operator? (16.A.07, 16.B.10)			
26. Is all equipment equipped with adequate service brake system and emergency brake system? (16.A.18)			
27. Are areas on equipment where employees walk or climb equipped with platforms, footwalks, steps, handholds, guardrails, toeboards and non-slip surfaces? (16.B.03)			
28. Is all self propelled equipment equipped with automatic, audible, reverse signal alarms? (16.B.01)			
29. Is there a record of manufacturer’s approval of any modification of equipment which affects its capacity or safe operation? (16.A.18)			
30. Are truck and crawler cranes attached to a barge or pontoon by a slack tiedown system? (16.F.06)			
31. Have the following conditions been met for land cranes mounted on barges or pontoons: (16.F.04) a. Have load ratings been modified to reflect the increased loading from list, trim, wave, and wind action? b. Are all deck surfaces above the water? c. Is the entire bottom area of the barge or pontoon submerged? d. Are tie downs available? e. Are cranes blocked and secured?			
32. Are all belts, gears, shafts, spindles, drums, flywheels, or other rotating parts of equipment guarded where is a potential for exposure to workers? (16.B.03)			

	Yes	No	N/A
33. Is the area where the crane is to work level, firm and secured? (16.A.10)			
34. Is a dry chemical or carbon dioxide fire extinguisher rated at least 5-B:C on the crane? (16.A.26)			
35. Are trucks, for truck mounted cranes, equipped with a working reverse signal alarm? (16.B.01)			
36. Is a signal person provided where there is danger from swinging loads, buckets, booms, etc.? (16.B.13)			
37. Is there adequate clearance from overhead structures and electrical sources for the crane to be operated safely? (16.C.09)			
38. Is there adequate lighting for night operations? (16.C.19)			
39. Has the the boom stop test on cable-supported booms been performed? (16.D.06)			
40. Is the boom disenaging device functioning as required? (16.D.06)			
41. Has all rigging and wire rope been inspected? (Section 15)			
Remarks:(Enter actions taken for all “no” answers.)			
Contractor inspector signature			
Contractor QC/safety officer/project manager signature			

SAFETY CHECKLIST FOR PORTAL, TOWER, AND PILLAR CRANES

Contract # and Title:			
Equipment name & number: owned or leased?			
Contractor:	Subcontractor:		
Contract Inspector:	Date Inspected:		
	Yes	No	N/A
1. Are the following available: (16.E.02) a. written erection instructions? b. listing of the weight of each component? c. an activity hazard analysis for the erection? d. does the activity hazard analysis contain (1.) location of crane and adjacent structures? (2.) foundation design and construction requirements? (3.) clearance and bracing requirements?			
2. Is there a boom angle indicator within the operator's view? (16.E.04)			
3. Are luffing jib cranes equipped with: (16.E.05) a. shock absorbing jib stops? b. jib hoist limit switch? c. jib angle indicator visible to operator?			
4. If used, do rail clamps have slack between the point of attachment to the rail and the end fastened to the crane? (16E.06)			
5. Are the following with the crane at all times: (16.C.02) a. the manufacturer's operating manual? b. the load rating chart? c. the crane's log book documenting use, maintenance, inspections and tests? d. the operating manual for crane operational aids used on the crane?			

	Yes	No	N/A
6. Are the following on the project site: a. completed periodic inspection report prior to initial work? (16.C.12) b. pre-operational checklist used for daily inspections? (16.C.12) c. written reports of the operational performance tests? (16.C.13) d. written reports of the load performance tests? (16.C.13)			
7. Is every crane operator certified by a physician to be physically qualified to perform work? (16.C.05)			
8. Are all operators qualified by written and practical exam or by appropriate licensing agency for the type crane they are to operate? (16.C.05)			
9. Is the crane designed and constructed IAW the standards listed in Table 16-1? (16.C.05)			
10. Is a hazard analysis for set-up and set-down available? (16.C.08)			
11. Are there at least 3 wraps of cable on the drum? (16.C.10)			
12. Are the hoisting ropes installed IAW the manufacturer’s recommendations? (16.C.10)			
13. Is the a record of manufacturer’s approval of any modification of equipment which affects its capacity or safe operation? (16.A.07)			
5. Remarks: (Enter actions taken)			
Contractor inspector signature			
Contractor QC/safety officer/project manager signature			

SAFETY CHECKLIST FOR RIGGING

Contract # and title:			
Equipment name & number: owned or leased?			
Contractor	Subcontractor:		
Contractor inspector:	Date inspected:		
	Yes	No	N/A
1. Has all defective rigging been removed? (15.A.01)			
2. Is rigging stored properly? (15.A.01)			
3. Are running lines within 6.5’ of the ground or working level guarded? (15.A.03)			
4. Are all eye splices made in an approved manner with rope thimbles? (sling eyes excepted) (15.A.04)			
5. Are positive latching devices used to secure loads? (15.A.05)			
6. Are all custom lifting accessories marked to indicate their safe working loads? (15A.07)			
7. Are all custom designed lifting accessories proof-tested to 125% of their rated load? (15.A.07)			
8. Are the following conditions met for wire rope: (15.B.01-09) a. Are they free of rust or broken wires? b. Are defective ropes cut up or marked as unusable? c. Do rope clips attached with U-bolts have the U-bolts on the dead end or short end of the rope? d. Are protruding ends of strands in splices on slings and bridles covered or blunted? e. Except for eye splices in the end of wires and for all endless wire rope slings, are all wire ropes used in hoisting, lowering, or pulling loads one continuous piece, free of knots or splices?			

	Yes	No	N/A
f. Do all eye splices have at least 5 full tucks? g. If used, are wedge sockets fastening attached without attached the dead end of the wire rope to the live rope? h. Are they free of eyes or splices formed by wire rope clips or knots?			
9. Are the following conditions met for chain? (15.C.01-04) a. Are all chains alloyed? b. Do all coupling links or other attachments have rated capacities at least equal to that of the chain. c. Are makeshift fasteners restricted from use?			
10. Are the following conditions met for fiber rope:(15.D.01-07) a. Are all ropes protected from freezing, excessive heat or corrosive materials? b. Are all ropes protected from abrasion? c. Are splices made IAW manufacture's recommendations? d. Do all eye splices in manila rope contain at least 3 full tucks and do all short splices contain at least 6 full tucks(3 on each side of the centerline of the splice)? e. Do all splices in layed synthetic fiber rope contain at least 4 full tucks and do short splices contain at least 8 full tucks (4 on each side of the centerline of the splice)? f. Do the tails of fiber rope splices extend at least 6 rope diameters (for rope 1" diameter or greater) past the last full tuck? g. Are all eye splices large enough to provide an included angle of not greater than 60* at the splice when the eye is placed over the load or support?			
11. Are the following conditions met for all slings:(15.E.01-06) a. Is protection provided between the sling and sharp surfaces? b. Do all rope slings have minimum clear length of 40 times the diameter of component ropes between each end fitting or eye splice? c. Do all braided slings have a minimum clear length of 40 times the diameter of component ropes between each end fitting or eye splice?			

	Yes	No	N/A
d. Do all welded alloy steel chain slings have affixed permanent identification stating size, grade, rated capacity and manufacturer? e. Is each synthetic web sling marked or coded to identify its manufacturer, rated capacities for each type hitch and the type material?			
12. Are drums, sheaves, and pulley smooth and free of surface defects? (15.F.01)			
13. Is the ratio of the diameter of the rigging and the drum, block sheave or pulley thread diameter such that the rigging will adjust without excessive wear, deformation, or damage? (15F.02)			
14. Have all damaged drums, sheaves and pulleys been removed from service? (15.F.04)			
15. Are all connections, fittings, fastenings, and attachments of good quality, proper size and strength, and installed IAW manufacturer's recommendations? (15.F.05)			
16. Are all shackles and hooks sized properly? (15.F.06 & .07)			
17. Are hoisting hooks rated at 10 tons or greater provided with safe handling means? (15.F.07)			
18. Do all drums have sufficient rope capacity? (15.F.08)			
19. Is the drum end of the rope anchored by a clamp securely attached to the drum in a manner approved by the manufacturer? (15.F.08)			
20. Do grooved drums have the correct groove pitch for the diameter of the rope and is the groove depth correct? (15.F.08)			
21. Do the flanges on grooved drums project beyond the last layer of rope at a distance of either 2″ or twice the diameter of the rope, whichever is greater? (15.F.08)			
22. Do the flanges on ungrooved drums project beyond the last layer of rope a distance of either 2.5″ or twice the diameter of the rope, which ever is greater.			

	Yes	No	N/A
23. Are the sheaves compatible with the size of rope used and as specified by the manufacture? (15F.09)			
24. Are sheaves properly aligned, lubricated, and in good condition? (15.F.09)			
25. When rope is subject to riding or jumping off a sheave, are sheaves equipped with cablekeepers? 915.F.09)			
26. Are eye bolts loaded in the plane of the eye and at angles less than 45* to the horizontal? (15.F.10)			
27. Remarks: (Enter actions taken for “no” answers.)			
Contractor inspector signature			
Contractor QC/safety/project manager signature			

SAFETY CHECKLIST FOR MOTOR VEHICLES , TRAILERS AND TRUCKS

Contract # and title: owned or leased?	
Equipment name & number:	
Contractor:	Subcontractor:
Contractor inspector:	Date inspected:

	Yes	No	N/A
1. Are records of safety inspections of all vehicles available? (18.A.02)			
2. Are all vehicles to be operated between sunset and sunrise equipped with: (18.A.04) a. 2 headlights? b. taillights and brake lights? c. front and back turn signals? d. 3 emergency flares, reflective markers, or equivalent portable warning devices?			
3. Are vehicles, except trailers or semi-trailers having a gross weight of 5000 lbs or less, equipped with service brakes and manually operated parking brakes? (18.A.05)			
4. Are service brakes on trailers and semitrailers controlled from the driver’s seat of the prime mover? (18A.06)			
5. Does the vehicle have: (18.A.06) a. a speedometer? b. a fuel gage? c. an audible warning device (horn)? d. a windshield & adequate windshield wiper? e. an operable defroster and defogging device? f. an adequate rearview mirror? g. a cab, cab shield, and other protection to protect the driver from the elements and falling or shifting materials? h. non-slip surfaces on steps? I. a power-operated starting device?			

	Yes	No	N/A
6. Is all the glass safety glass and is all broken or cracked glass replace? (18.A.07)			
7. Do trailers meet the following: (18A.08) a. Are all towing devices adequate for the weight drawn? b. Are all towing devices properly mounted? c. Are locking devices or a double safety system provided on every 5th wheel mechanism and tow bar arrangement to prevent accidental separation? d. Are trailers coupled with safety chains or cables to the towing vehicle? e. Are trailers equipped with the power brakes equipped with a break-away device which will lock-up the brakes in the event the trailer separates from the towing vehicle?			
8. Are all dump trucks:(18.A.10) a. equipped with a holding device to prevent accidental lowering of the body? b. equipped with a hoist lever secured to prevent accidental starting or tipping? c. equipped with means to determine (from the operator’s position) if the dump box is lowered? d. equipped with trip handles for tailgates that allow the operator to be clear?			
9. Are all buses, trucks and combination of vehicles with a carrying capacity of 1.5 tons or more, to be operated on public roads equipped with: (18.A.11) a. 3 reflective markers? b. 2 wheel chocks for each vehicle? c. at least one 2A:10B:C fire extinguisher? d. at least two properly rated fire extinguishers (for vehicles carrying flammable cargo)? e. a red flag not less than 1 foot square.			
10. Is vehicle exhaust controlled so as not to present a hazard to personnel? (18.A.13)			
11. Are all rubber tired motor vehicles equipped with fenders or with mud flaps if the vehicle is not designed for fenders? (18.A.14)			

	Yes	No	N/A
12. Are all vehicles, except buses, equipped with seat belts? (18.B.02)			
13. Does all self-propelled construction and industrial equipment have a working reverse signal alarm? (16.B.01)			
14. Are all hot surfaces of equipment, including exhaust pipes or other lines, guarded or insulated to prevent injury or fire? (16.B.03)			
15. If an off the road vehicle, is it equipped with rollover protective structures? (16.B.12)			
16. Remarks: (Enter actions taken for “no” answers)			
Contractor inspector signature			
Contractor QC/safety officer/project manager signature			

SAFETY CHECKLIST FOR CRAWLER TRACTORS AND DOZERS

Contract # and title:	
Equipment name & number: owned or leased?	
Contractor:	Subcontractor:
Contractor inspector:	Date inspected:

	Yes	No	N/A
1. Are initial and daily/shift inspection records available? (16.A.01& .02)			
2. Are only qualified operators assigned to operate mechanized equipment? (16.A.04)			
3. Are sufficient lights provided for night operations? (16.A.11)			
4. Is the unit shut down before refueling? (16.A.14)			
5. Does the unit have as a minimum a 5-B:C fire extinguisher? (16.A.26)			
6. Is there an effective, working reverse alarm? (16.B.01)			
7. Are moving parts, shafts, sprockets, belts, etc., guarded? (16.B.03 ,07, and 13)			
8. Is protections against hot surfaces, exhausts, etc., provided? (16.B.03 and .13)			
9. Are fuel tanks located in a manner to prevent spills or overflows from running onto engine exhaust or electrical equipment?			

	Yes	No	N/A
10. Are exhaust discharges directed so they do not endanger person of obstruct operator vision?(16.B.05)			
11. Are seat belts provided? (16B.08)			
12. Is protection (grills, canopies, screens) provided to shield operator from falling or flying objects? (16.B.10 and .11)			
13. Is roll over protection provided? (16.B.12)			
14. Remarks: (Enter actions taken for “no” answers)			
Contractor inspector signature			
Contractor QC/safety officer/project manager signature			

SAFETY CHECKLIST FOR SCRAPERS, MOTOR GRADERS , AND OTHER MOBILE EQUIPMENT

Contract # and title:	
Equipment name and number: owned or leased?	
Contractor:	Subcontractor:
Contractor inspector:	Date inspected:

	Yes	No	N/A
1. Are initial and daily/shift inspection records available? (16.A.01 & .02)			
2. Are only qualified operators assigned to operate equipment? (16.A.04)			
3. Are sufficient lights provided for night operations? (16.A.11)			
4. Does the unit have as a minimum a 5-B:C fire extinguisher? (16.A.26)			
5. Is there an effective working reverse alarm? (16.B.01)			
6. Is the unit shut down for refueling? (16.A.14)			
7. Are moving parts, shafts, sprockets, belts, etc., guarded? (16.B.03, .07 and .13)			
8. Is protection against hot surfaces, exhausts, etc., provided? (16.B.03 and .13)			
9. Are fuel tanks located in a manner to prevent spills or overflow from running onto engine exhaust or electrical equipment? (16.B.04)			
10. Are exhaust discharges directed so they do not endanger persons or obstruct operator vision? (16.B.05)			

	Yes	No	N/A
11. Are seat belts provided for each person required to ride on the equipment? (16.B.08)			
12. Is protection (grills, canopies, screens) provided to shield operators from falling or flying objects? (16.B.10 and .11)			
13. Is roll over protection provided? (16.B.12)			
14. Is a safe means of access to the cab provided (steps, grab bars, non-slip surfaces)? (16.B.03)_			
15. Are adequate head and tail lights provided? (16.A.07)			
16. Have brakes been tested and found satisfactory? (16.A.07)			
17. Does the unit have an emergency brake which will automatically stop the equipment upon brake failure? Is this system manually operable from the drivers position? (16.A.07)			
18. Is all equipment with windshields equipped with powered wipers and defogging or defrosting system? (16.A.07)			
19. Are all vehicles which will be parked or moving slower than normal traffic on haul roads equipped with a yellow flashing light or flasher visible from all directions? (16.A.13)			
20. Is the slow moving emblem used on all vehicles which by design move at 25 MPH or less on public roads? (08A.04)			

	Yes	No	N/A
21. Have air tanks been tested and certified? (20.A.01)			
22. Is an air pressure gage in working condition installed on the unit? (20.A.12)			
23. Does the air tank have an accessible drain valve? (20.B.17)			
24. Remarks: (Enter action taken for all “no” answers)			
Contractor inspector signature			
Contractor QC/safety officer/project manager			

SAFETY CHECKLIST FOR MATERIAL HOISTS

Contract # and title:	
Equipment name & number:	
Contractor:	Subcontractor:
Contract Inspector:	Date inspected:

	Yes	No	N/A
1. Are all hoist towers, masts, guys or braces, counterweights, drive machinery supports, sheave supports, platforms, supporting structures, and accessories designed by a licensed engineer? (16.K.02)			
2. Is a copy of the hoist operating manual available? (16.K.04)			
3. Do all floors and platforms have slip-resistant surfaces? (16.K.08)			
4. Are landings and runways adequately barricaded and is overhead protection provided where needed? (16.K.08)			
5. Are hoisting ropes installed IAW manufacturer's instructions? (16.K.10)			
6. Are operating rules posted at the hoist operator's station? (16.K.14)			
7. Are air powered hoists connected to an air supply of sufficient capacity and pressure to safely operate the hoist? (16.K.15)			
8. Are pneumatic hoses secured by some positive means to prevent accidental disconnection? (16.K.15)			
9. Remarks: (Enter actions taken for all "no" answers.)			
Contractor inspector signature			
Contractor QC/safety officer/project manager signature			

SAD Form 1666g-R Mar 97 Previous editions may be used for contracts referencing the 1992 edition of EM 385-1-1.

SAFETY CHECKLIST FOR EARTH DRILLING EQUIPMENT

Contract # and title:	
Equipment name & number:	
Contractor:	Subcontractor:
Contractor inspector:	Date inspected:

	Yes	No	N/A
1. Is a copy of the manual for all drilling equipment available? (16.M.01)			
2. Have all overhead electrical hazards and potential ground hazards been identified in a site layout plan and addressed in an activity hazard analysis? (16.M.02)			
3. Are MSDSs for all drilling fluids available? (16.M.05)			
4. Does the drilling equipment have 2 easily accessible emergency shut down devices (one for the operator and one for the helper)? (16.M.06)			
5. Is the equipment posted with a warning of electrical hazards? (16.M.06)			
6. Is there a spotter or an electrical proximity warning device available to ensure safe distances from power lines are maintained? (16.M.06)			
7. Remarks: (Enter actions taken for “no” answers)			
Contractor inspector signature			
Contractor QC/safety officer/project manager			

SAD Form 1666h-R Mar 97 Previous editions may be used for contracts referencing the 1992 edition of EM 385-1-1.

TRANSMITTAL OF SHOP DRAWINGS, EQUIPMENT DATA, MATERIAL SAMPLES, OR MANUFACTURER'S CERTIFICATES OF COMPLIANCE *(Read instructions on the reverse side prior to initiating this form)*	DATE	TRANSMITTAL NO.

SECTION I - REQUEST FOR APPROVAL OF THE FOLLOWING ITEMS *(This section will be initiated by the contractor)*

TO:	FROM:	CONTRACT NO.	CHECK ONE: ☐ THIS IS A NEW TRANSMITTAL ☐ THIS IS A RESUBMITTAL OF TRANSMITTAL _____
SPECIFICATION SEC. NO. *(Cover only one section with each transmittal)*	PROJECT TITLE AND LOCATION		CHECK ONE: THIS TRANSMITTAL IS FOR ☐ FIO ☐ GOV'T. APPROVAL

ITEM NO. *a.*	DESCRIPTION OF ITEM SUBMITTED *(Type size, model number/etc.)* *b.*	MFG OR CONTR. CAT., CURVE DRAWING OR BROCHURE NO. *(See instruction no. 8)* *c.*	NO. OF COPIES *d.*	CONTRACT REFERENCE DOCUMENT		FOR CONTRACTOR USE CODE *g.*	VARIATION *(See instruction No. 6)* *h.*	FOR CE USE CODE *i.*
				SPEC. PARA. NO. *e.*	DRAWING SHEET NO. *f.*			

REMARKS	I certify that the above submitted items have been reviewed in detail and are correct and in strict conformance with the contract drawings and specifications except as other wise stated. NAME AND SIGNATURE OF CONTRACTOR

SECTION II - APPROVAL ACTION

ENCLOSURES RETURNED *(List by Item No.)*	NAME, TITLE AND SIGNATURE OF APPROVING AUTHORITY	DATE

INSTRUCTIONS

1. Section I will be initiated by the Contractor in the required number of copies.

2. Each transmittal shall be numbered consecutively in the space provided for "Transmittal No.". This number, in addition to the contract number, will form a serial number for identifying each submittal. For new submittals or resubmittals mark the appropriate box; on resubmittals, insert transmittal number of last submission as well as the new submittal number.

3. The "Item No." will be the same "Item No." as indicated on ENG FORM 4288-R for each entry on this form.

4. Submittals requiring expeditious handling will be submitted on a separate form.

5. Separate transmittal form will be used for submittals under separate sections of the specifications.

6. A check shall be placed in the "Variation" column when a submittal is not in accordance with the plans and specifications--also, a written statement to that effect shall be included in the space provided for "Remarks".

7. Form is self-transmittal, letter of transmittal is not required.

8. When a sample of material or Manufacturer's Certificate of Compliance is transmitted, indicate "Sample" or "Certificate" in column c, Section I.

9. U.S. Army Corps of Engineers approving authority will assign action codes as indicated below in space provided in Section I, column i to each item submitted. In addition they will ensure enclosures are indicated and attached to the form prior to return to the contractor. The Contractor will assign action codes as indicated below in Section I, column g, to each item submitted.

THE FOLLOWING ACTION CODES ARE GIVEN TO ITEMS SUBMITTED

A -- Approved as submitted.

B -- Approved, except as noted on drawings.

C -- Approved, except as noted on drawings.
Refer to attached sheet resubmission required.

D -- Will be returned by separate correspondence.

E -- Disapproved (See attached).

F -- Receipt acknowledged.

FX -- Receipt acknowledged, does not comply as noted with contract requirements.

G -- Other *(Specify)*

10. Approval of items does not relieve the contractor from complying with all the requirements of the contract plans and specifications.

(Reverse of ENG Form 4025-R)

COST ESTIMATE ANALYSIS

For use of this form, see TM 5-800-2; the proponent agency is USACE.

PROJECT	INVITATION/CONTRACTOR	EFFECTIVE PRICING DATE	DATE PREPARED
LOCATION	CODE (Check one) ☐ A ☐ B ☐ C ☐ OTHER	DRAWING NO.	SHEET OF SHEETS
		ESTIMATOR	CHECKED BY

TASK DESCRIPTION	QUANTITY		LABOR				EQUIPMENT		MATERIAL		TOTAL	SHIPPING	
	NO. OF UNITS	UNIT MEAS	MH UNIT	TOTAL HRS	UNIT PRICE	COST	UNIT PRICE	COST	UNIT PRICE	COST		UNIT WT	TOTAL WT
TOTAL THIS SHEET													

DA FORM 5418-R, Apr 85

TRANSFER AND ACCEPTANCE OF MILITARY REAL PROPERTY

Form Approved
OMB No. 0704-0188

PAGE OF PAGES

Public reporting burden for this collection of information is estimated to average 30 minutes per response, including the time for reviewing instructions, searching existing data sources, gathering and maintaining the data needed, and completing and reviewing the collection of information. Send comments regarding this burden estimate or any other aspect of this collection of information, including suggestions for reducing this burden, to Washington Headquarters Services, Directorate for Information Operations and Reports, 1215 Jefferson Davis Highway, Suite 1204, Arlington, Va 22202-4302, and to the Office of Management and Budget, Paperwork Reduction Project (0704-0188), Washington, DC 20503.

1. **FROM** *(Installation/Activity/Service and Zip code)*	2. OPERATING UNIT	3. DISTRICT CODE	4. OPERATING AGENCY	5. DATE	6. JOB NUMBER	7. SERIAL NUMBER	8. CONTRACT NUMBER

9. **TO** *(Installation/Activity/Service and Zip code)*	10. OPERATING UNIT	11. DISTRICT CODE	12. OPERATING AGENCY	13. ACCOUNTING NUMBER	14. ACCOUNTABLE OFFICE NUMBER	15. TYPE OF TRANSACTION		16. PROJECT NUMBER
						A. ☐ NEW CONSTR. ☐ EXISTING FAC. ☐ CAPITAL IMP. ☐ OTHER *(Specify)*	B. ☐ BENF/O ☐ PHYSICAL COM. ☐ FINAN. COM. ☐ OTHER *(Specify)*	

ITEM NO. 17	CATEGORY CODE 18	FACILITY *(Category description)* 19	NO. OF UNITS 20	TYPE 21	UNIT OF MEAS. 22	TOTAL QUANTITY 23	COST 24	DRAWING NUMBERS 25	REMARKS 26

27.		28. ACCEPTED BY *(Signature)*	DATE
TRANSFERRED BY *(Signature)*	DATE	TITLE *(Post Engr./Base Civ. Engr./Navy Rep.)*	29. PROPERTY VOUCHER NUMBER
TITLE *(Area Engr./Base Engr./DPWO)*			

30. CONSTRUCTION DEFICIENCIES

31. REMARKS

INSTRUCTIONS

This form has been designed and issued for use in connection with the transfer of military real property between the military departments and to or from other government agencies. It supersedes ENG Forms 290 and 290B (formerly used by the Army and Air Force) and NAVDOCKS Form 2317 (formerly used by the Navy).

Existing instructions issued by the military departments relative to the preparation of the three superseded forms are applicable to this form to the extent that the various items and columns on the superseded forms have been retained. Additional instructions, as appropriate, will be promulgated by the military departments in connection with any new items appearing hereon.

With the issuance of this DD form, it is not intended that the departments shall revise and reprint manuals and directives simply to show the number of this DD form. Such action can be accomplished through the normal course of revision for other reasons.

Approved by OM 0348-0046

DISCLOSURE OF LOBBYING ACTIVITIES

Complete this form to disclose lobbying activities pursuant to 31 U.S.C. 1352
(See reverse for public burden disclosure.)

1. Type of Federal Action:

☐ a. contract
b. grant
c. cooperative agreement
d. loan
e. loan guarantee
f. loan insurance

2. Status of Federal Action:

☐ a. bid/offer/application
b. initial award
c. post-award

3. Report Type:

☐ a. initial filing
b. material change

For Material Change Only:
year _____ quarter _____
date of last report _____

4. Name and Address of Reporting Entity:

☐ Prime ☐ Subawardee
Tier _____, *if known*:

Congressional District, *if known:*

5. If Reporting Entity in No. 4 is Subawardee, Enter Name and Address of Prime:

Congressional District, *if known*:

6. Federal Department/Agency:

7. Federal Program Name/Description:

CFDA Number, *if applicable*: _____

8. Federal Action Number, *if known*:

9. Award Amount, *if known*:

$

10. a. Name and Address of Lobbying Entity
(*if individual, last name, first name, MI):*

b. Individuals Performing Services *(including address if different from No. 10a)*
(last name, first name, MI):

(attach Continuation Sheet(s) SF-LLL-A, *if necessary*)

11. Amount of Payment *(check all that apply)*:

$ _____ ☐ actual ☐ planned

12. Form of Payment *(check all that apply)*:

☐ a. cash
☐ b. in-kind; specify: nature _____
value _____

13. Type of Payment *(check all that apply)*:

☐ a. retainer
☐ b. one-time fee
☐ c. commission
☐ d. contingent fee
☐ e. deferred
☐ f. other; specify: _____

14. Brief Description of Services Performed or to be Performed and Date(s) of Service, including officer(s), employee(s), or Member(s) contacted, for Payment indicated in Item 11:

(attach Continuation Sheet(s) SF-LLL-A, *if necessary*)

15. Continuation Sheet(s) SF-LLL-A attached: ☐ Yes ☐ No

16. Information requested through this form is authorized by title 31 U.S.C section 1352. This disclosure of lobbyig activities is a materia representation of fact upon which reliance was placed by the tier above when this transaction was made or entered into. This disclosure is required pursuant to 31 U.S.C. 1352 . This information will be reported to the Congress semi-annually and will be available for public inspection. Any person who fails to

Signature: _____

Print Name: _____

Title: _____

Telephone No.: _____ **Date:** _____

Federal Use Only:

Authorized for Local Reproduction

INSTRUCTIONS FOR COMPLETION OF SF-LLL, DISCLOSURE OF LOBBYING ACTIVITIES

This disclosure form shall be completed by the reporting entity, whether subawardee or prime Federal recipient, at the initiation or receipt of a covered Federal action, or a material change to a previous filing, pursuant to title 31 U.S.C. section 1352. The filing of a form is required for each payment or agreement to make payment to any lobbying entity for influencing or attempting to influence an officer or employee of any agency, a Member of Congress, an officer or employee of Congress, or an employee of a member of Congress in connection with a covered Federal action. Use the SF-LLL-A Continuation Sheet for additional information if the space on the form is inadequate. Complete all items that apply for both the initial filing and material change report. Refer to the implementing guidance published by the Office of Management and Budget for additional information.

1. Identify the type of covered Federal action for which lobbying activity is and/or has been secured to influence the outcome of a covered Federal action.

2. Identify the status of the covered Federal action.

3. Identify the appropriate classification of this report. If this is a followup report caused by a material change to the information previously reported, enter the year and quarter in which the change occurred. Enter the date of the last previously submitted report by this reporting entity for this covered Federal action.

4. Enter the full name, address, city, state and zip code of the reporting entity. Include Congressional District, if known. Check the appropriate classification of the reporting entity that designates if it is, or expects to be, a prime or subaward recipient. Identify the tier of the subawardee, e.g., the first subawardee of the prime is the 1st tier. Subawards include but are not limited to subcontracts, subgrants and contract awards under grants.

5. If the organization filing the report in item 4 checks “Subawardee”, then enter the full name, address, city, state and zip code of the prime Federal recipient. Include Congressional District, if known.

6. Enter the name of the Federal agency making the award or loan commitment. Include at least one organizational level below agency name, if known. For example, Department of Transportation, United States Coast Guard.

7. Enter the Federal program name or description for the covered Federal action (item 1). If known, enter the full Catalog of Federal Domestic Assistance (CFDA) number for grants, cooperative agreements, loans, and loan commitments.

8. Enter the most appropriate Federal identifying number available for the Federal action identified in item 1 (e.g., Request for Proposal (RFP) number; Invitation for Bid (IFB) number; grant announcement number; the contract, grant, or loan award number; the application/proposal control number assigned by the Federal agency). Include prefixes, e.g., “RFP-DE-90-001.”

9. For a covered Federal action where there has been an award or loan commitment by the Federal agency, enter the Federal amount of the award/loan commitment for the prime entity identified in item 4 or 5.

10. (a) Enter the full name, address, city, state and zip code of the lobbying entity engaged by the reporting entity identified in item 4 to influence the covered Federal action.

    (b) Enter the full names of the individuals(s) performing services, and include full address if different from 10 (a). Enter Last Name, First Name, and Middle Initial (MI).

11. Enter the amount of compensation paid or reasonably expected to be paid by the reporting entity (item 4) to the lobbying entity (item 10). Indicate whether the payment has been made (actual) or will be made (planned). Check all boxes that apply. If this is a material change report, enter the cumulative amount of payment made or planned to be made.

12. Check the appropriate box(es). Check all boxes that apply. If payment is made through an in-kind contribution, specify the nature and value of the in-kind payment.

13. Check the appropriate box(es). Check all boxes that apply. If other, specify nature.

    Provide a specific and detailed description of the services that the lobbyist has performed, or will be expected to perform, and the date(s) of any services rendered. Include all preparatory and related activity, not just time spent in

Public reporting burden for this collection of information is estimated to average 30 minutes per response, including time for reviewing instructions, searching existing data sources, gathering and maintaining the data needed, and completing and reviewing the collection of information. Send comments regarding the burden estimate or any other aspect of this collection of information, including suggestions for reducing this burden, to the Office of Management and Budget, Paperwork Reduction Project (0348-0046), Washington, D.C. 20503.

DISCLOSURE OF LOBBYING ACTIVITIES
CONTINUATION SHEET

Approved by OM
0348-0046

Reporting Entity: _____ Page ____ of ____ ____

*U.S. G.P.O. 1990-260-708:00012

REAL PROPERTY INVENTORY

ITEM	TALLY	TOTAL
COMMODES		
LAVATORIES		
URINALS		
EXHAUST FAN (9")		
EXHAUST FAN (OTHER)		
WATER COOLER		
HOTWATER HEATER		
MOP SINK		
AC PLANT	LS 5 TN. 5-25 TN. 25-100 TN. OVER 100 TN.	
AS (WINDOW TYPE)		
FIRE ALARM SYSTEM	MANUAL HALON SPRINKLER	
EMERGENCY LIGHTS		
UNIT HEATER		
STRIP HEATER		
COOLING TOWER		
WALK-IN COOLER		
AIR CURTAIN		
EYE WASH		
SHOWERS		
BOILER	GAS FIRED OIL FIRED STEAM	
FUEL TANK	UNDERGROUND OUTSIDE	

REAL PROPERTY INVENTORY

ITEM	TALLY	TOTAL
WASH BASIN		
AIR COMPRESSOR		
HOISTS		
INVENTORY BY:		DATA:
RECONCILED BY:		DATA:

REAL PROPERTY INVENTORY

ITEM	TALLY	TOTAL
INVENTORIED BY:		DATE:
RECONCILED BY:		DATE:

PROJECT TABLE OF CONTENTS

DIVISION 01 - GENERAL REQUIREMENTS

01312A QUALITY CONTROL SYSTEM (QCS)
01320A PROJECT SCHEDULE
01330 SUBMITTAL PROCEDURES
01335 *1 SUSTAINABLE DESIGN AND DEVELOPMENT
01355A ENVIRONMENTAL PROTECTION
01420 SOURCES FOR REFERENCE PUBLICATIONS
01451A CONTRACTOR QUALITY CONTROL
01500 TEMPORARY CONSTRUCTION FACILITIES
01572A CONSTRUCTION AND DEMOLITION WASTE MANAGEMENT
01670 RECYCLED / RECOVERED MATERIALS
01780A CLOSEOUT SUBMITTALS
01781 OPERATION AND MAINTENANCE DATA

DIVISION 02 - SITE CONSTRUCTION

02220 DEMOLITION
02231 CLEARING AND GRUBBING
02300A EARTHWORK
02315A EXCAVATION, FILLING AND BACKFILLING FOR BUILDINGS
02316A EXCAVATION, TRENCHING, AND BACKFILLING FOR UTILITIES SYSTEMS
02364A TERMITICIDE TREATMENT MEASURES FOR SUBTERRANEAN TERMITE CONTROL
02510A WATER DISTRIBUTION SYSTEM
02531 SANITARY SEWERS
02547 BITUMINOUS PAVEMENT WITH BASE COURSE
02555A *3 PREFABRICATED UNDERGROUND COOLING DISTRIBUTION SYSTEM
02630A STORM-DRAINAGE SYSTEM
02763A PAVEMENT MARKINGS
02770A CONCRETE SIDEWALKS AND CURBS AND GUTTERS
02792 BASKETBALL COURT SURFACING
02870A SITE FURNISHINGS
02921A SEEDING
02922A SODDING
02930A EXTERIOR PLANTING
02964A COLD MILLING OF BITUMINOUS PAVEMENTS
02975A SEALING OF CRACKS IN BITUMINOUS PAVEMENTS

DIVISION 03 - CONCRETE

03100A STRUCTURAL CONCRETE FORMWORK
03150A EXPANSION JOINTS, AND CONTRACTION JOINTS
03200A CONCRETE REINFORCEMENT
03300 CAST-IN-PLACE STRUCTURAL CONCRETE
03415 PRECAST-AUTOCLAVED AERATED CONCRETE

DIVISION 04 - MASONRY

04200 MASONRY

DIVISION 05 - METALS

05120 STRUCTURAL STEEL
05450 PRE-ENGINEERED LIGHT GAUGE STEEL FRAMING SYSTEM
05500A MISCELLANEOUS METAL

DIVISION 06 - WOOD AND PLASTICS

06100A ROUGH CARPENTRY
06200A FINISH CARPENTRY

DIVISION 07 - THERMAL AND MOISTURE PROTECTION

07240 EXTERIOR FINISH SYSTEMS
07311 ASPHALT SHINGLES
07416A STRUCTURAL STANDING SEAM METAL ROOF (SSSMR) SYSTEM
07600 FLASHING AND SHEET METAL
07840A FIRESTOPPING
07900A JOINT SEALING

DIVISION 08 - DOORS AND WINDOWS

08110 STEEL DOORS AND FRAMES
08120 ALUMINUM FRAMES
08210 WOOD DOORS
08520A ALUMINUM AND ENVIRONMENTAL CONTROL ALUMINUM WINDOWS
08710 DOOR HARDWARE
08810A GLASS AND GLAZING

DIVISION 09 - FINISHES

09100N METAL SUPPORT ASSEMBLIES
09250 GYPSUM BOARD
09310 CERAMIC TILE AND PAVER TILE
09510 ACOUSTICAL CEILINGS
09680A CARPET AND WALL BASE
09900 PAINTS AND COATINGS

DIVISION 10 - SPECIALTIES

10100A VISUAL COMMUNICATIONS SPECIALTIES
10201N METAL WALL AND GABLE LOUVERS
10440 INTERIOR AND EXTERIOR SIGNAGE
10550 POSTAL UNITS
10800 TOILET ACCESSORIES

DIVISION 11 - EQUIPMENT

11401N ELECTRIC KITCHEN EQUIPMENT

DIVISION 12 - FURNISHINGS

12320A CABINETS AND COUNTERTOPS
12490A WINDOW TREATMENT

DIVISION 13 - SPECIAL CONSTRUCTION

13081 SEISMIC PROTECTION FOR MISCELLANEOUS EQUIPMENT
13280A *1 ASBESTOS ABATEMENT
13851A FIRE DETECTION AND ALARM SYSTEM, ADDRESSABLE
13930A WET PIPE SPRINKLER SYSTEM, FIRE PROTECTION

DIVISION 15 - MECHANICAL

15080A THERMAL INSULATION FOR MECHANICAL SYSTEMS
15181A CHILLED AND HEATING WATER PIPING AND ACCESSORIES

15190A GAS PIPING SYSTEMS
15400A PLUMBING, GENERAL PURPOSE
15500A DESICCANT COOLING SYSTEMS
15514N LOW PRESSURE WATER HEATING BOILERS (UNDER 800,000 BTU/HR OUTPUT)
15620A LIQUID CHILLERS
15895 AIR SUPPLY, DISTRIBUTION, VENTILATION, AND EXHAUST SYSTEM
15951A DIRECT DIGITAL CONTROL FOR HVAC
15990A TESTING, ADJUSTING, AND BALANCING OF HVAC SYSTEMS
15995A COMMISSIONING OF HVAC SYSTEMS

DIVISION 16 - ELECTRICAL

16375A ELECTRICAL DISTRIBUTION SYSTEM, UNDERGROUND
16415A ELECTRICAL WORK, INTERIOR
16528A EXTERIOR LIGHTING INCLUDING SECURITY AND CCTV APPLICATIONS
16710A PREMISES DISTRIBUTION SYSTEM
16815A CABLE TELEVISION PREMISES DISTRIBUTION SYSTEM

-- End of Project Table of Contents --

SECTION TABLE OF CONTENTS

DIVISION 01 - GENERAL REQUIREMENTS

SECTION 01312A

QUALITY CONTROL SYSTEM (QCS)

08/02

1.1 GENERAL
1.1.1 Correspondence and Electronic Communications
1.1.2 Other Factors
1.2 QCS SOFTWARE
1.3 SYSTEM REQUIREMENTS
1.4 RELATED INFORMATION
1.4.1 QCS User Guide
1.4.2 Contractor Quality Control(CQC) Training
1.5 CONTRACT DATABASE
1.6 DATABASE MAINTENANCE
1.6.1 Administration
1.6.1.1 Contractor Information
1.6.1.2 Subcontractor Information
1.6.1.3 Correspondence
1.6.1.4 Equipment
1.6.1.5 Management Reporting
1.6.2 Finances
1.6.2.1 Pay Activity Data
1.6.2.2 Payment Requests
1.6.3 Quality Control (QC)
1.6.3.1 Daily Contractor Quality Control (CQC) Reports.
1.6.3.2 Deficiency Tracking.
1.6.3.3 Three-Phase Control Meetings
1.6.3.4 Accident/Safety Tracking.
1.6.3.5 Features of Work
1.6.3.6 QC Requirements
1.6.4 Submittal Management
1.6.5 Schedule
1.6.6 Import/Export of Data
1.7 IMPLEMENTATION
1.8 DATA SUBMISSION VIA COMPUTER DISKETTE OR CD-ROM
1.8.1 File Medium
1.8.2 Disk or CD-ROM Labels
1.8.3 File Names
1.9 MONTHLY COORDINATION MEETING
1.10 NOTIFICATION OF NONCOMPLIANCE

-- End of Section Table of Contents --

SECTION 01312A

QUALITY CONTROL SYSTEM (QCS)
08/02

1.1 GENERAL

The Government will use the Resident Management System for Windows (RMS) to assist in its monitoring and administration of this contract. The Contractor shall use the Government-furnished Construction Contractor Module of RMS, referred to as QCS, to record, maintain, and submit various information throughout the contract period. The Contractor module, user manuals, updates, and training information can be downloaded from the RMS web site.This joint Government-Contractor use of RMS and QCS will facilitate electronic exchange of information and overall management of the contract. QCS provides the means for the Contractor to input, track, and electronically share information with the Government in the following areas:

Administration
Finances
Quality Control
Submittal Monitoring
Scheduling
Import/Export of Data

1.1.1 Correspondence and Electronic Communications

For ease and speed of communications, both Government and Contractor will, to the maximum extent feasible, exchange correspondence and other documents in electronic format. Correspondence, pay requests and other documents comprising the official contract record shall also be provided in paper format, with signatures and dates where necessary. Paper documents will govern, in the event of discrepancy with the electronic version.

1.1.2 Other Factors

Particular attention is directed to Contract Clause, "Schedules for Construction Contracts", Contract Clause, "Payments", Section 01320A, PROJECT SCHEDULE, Section 01330, SUBMITTAL PROCEDURES, and Section 01451A, CONTRACTOR QUALITY CONTROL, which have a direct relationship to the reporting to be accomplished through QCS. Also, there is no separate payment for establishing and maintaining the QCS database; all costs associated therewith shall be included in the contract pricing for the work.

1.2 QCS SOFTWARE

QCS is a Windows-based program that can be run on a stand-alone personal computer or on a network. The Government will make available the QCS software to the Contractor after award of the construction contract. Prior to the Pre-Construction Conference, the Contractor shall be responsible to download, install and use the latest version of the QCS software from the Government's RMS Internet Website. Upon specific justification and request by the Contractor, the Government can provide QCS on 3-1/2 inch high-density diskettes or CD-ROM. Any program updates of QCS will be made available to the Contractor via the Government RMS Website as they become

available.

1.3 SYSTEM REQUIREMENTS

The following listed hardware and software is the minimum system configuration that the Contractor shall have to run QCS:

Hardware

IBM-compatible PC with 500 MHz Pentium or higher processor

128+ MB RAM for workstation / 256+ MB RAM for server

1 GB hard drive disk space for sole use by the QCS system

3 1/2 inch high-density floppy drive

Compact disk (CD) Reader, 8x speed or higher

SVGA or higher resolution monitor (1024 x 768, 256 colors)

Mouse or other pointing devise

Windows compatible printer (Laser printer must have 4+ MB of RAM)

Connection to the Internet, minimum 56 BPS

Software

MS Windows 98, ME, NT, or 2000

Word Processing software compatible with MS Word 97 or newer

Latest version of : Netscape Navigator, Microsoft Internet Explorer, or other browser that supports HTML 4.0 or higher

Electronic mail (E-mail), MAPI compatible

Virus protection software that is regularly upgraded with all issued manufacturer's updates

1.4 RELATED INFORMATION

1.4.1 QCS User Guide

After contract award, the Contractor shall download instructions for the installation and use of QCS from the Government RMS Internet Website; the Contractor can obtain the current address from the Government. In case of justifiable difficulties, the Government will provide the Contractor with a CD-ROM containing these instructions.

1.4.2 Contractor Quality Control(CQC) Training

The use of QCS will be discussed with the Contractor's QC System Manager during the mandatory CQC Training class.

1.5 CONTRACT DATABASE

Prior to the pre-construction conference, the Government shall provide the Contractor with basic contract award data to use for QCS. The Government will provide data updates to the Contractor as needed, generally by files attached to E-mail. These updates will generally consist of submittal reviews, correspondence status, QA comments, and other administrative and QA data.

1.6 DATABASE MAINTENANCE

The Contractor shall establish, maintain, and update data for the contract in the QCS database throughout the duration of the contract. The Contractor shall establish and maintain the QCS database at the Contractor's site office. Data updates to the Government shall be submitted by E-mail with file attachments, e.g., daily reports, schedule updates, payment requests. If permitted by the Contracting Officer, a data diskette or CD-ROM may be used instead of E-mail (see Paragraph DATA SUBMISSION VIA COMPUTER DISKETTE OR CD-ROM). The QCS database typically shall include current data on the following items:

1.6.1 Administration

1.6.1.1 Contractor Information

The database shall contain the Contractor's name, address, telephone numbers, management staff, and other required items. Within 14 calendar days of receipt of QCS software from the Government, the Contractor shall deliver Contractor administrative data in electronic format via E-mail.

1.6.1.2 Subcontractor Information

The database shall contain the name, trade, address, phone numbers, and other required information for all subcontractors. A subcontractor must be listed separately for each trade to be performed. Each subcontractor/trade shall be assigned a unique Responsibility Code, provided in QCS. Within 14 calendar days of receipt of QCS software from the Government, the Contractor shall deliver subcontractor administrative data in electronic format via E-mail.

1.6.1.3 Correspondence

All Contractor correspondence to the Government shall be identified with a serial number. Correspondence initiated by the Contractor's site office shall be prefixed with "S". Letters initiated by the Contractor's home (main) office shall be prefixed with "H". Letters shall be numbered starting from 0001. (e.g., H-0001 or S-0001). The Government's letters to the Contractor will be prefixed with "C".

1.6.1.4 Equipment

The Contractor's QCS database shall contain a current list of equipment planned for use or being used on the jobsite, including the most recent and planned equipment inspection dates.

1.6.1.5 Management Reporting

QCS includes a number of reports that Contractor management can use to track the status of the project. The value of these reports is reflective

of the quality of the data input, and is maintained in the various sections of QCS. Among these reports are: Progress Payment Request worksheet, QA/QC comments, Submittal Register Status, Three-Phase Inspection checklists.

1.6.2 Finances

1.6.2.1 Pay Activity Data

The QCS database shall include a list of pay activities that the Contractor shall develop in conjunction with the construction schedule. The sum of all pay activities shall be equal to the total contract amount, including modifications. Pay activities shall be grouped by Contract Line Item Number (CLIN), and the sum of the activities shall equal the amount of each CLIN. The total of all CLINs equals the Contract Amount.

1.6.2.2 Payment Requests

All progress payment requests shall be prepared using QCS. The Contractor shall complete the payment request worksheet and include it with the payment request. The work completed under the contract, measured as percent or as specific quantities, shall be updated at least monthly. After the update, the Contractor shall generate a payment request report using QCS. The Contractor shall submit the payment requests with supporting data by E-mail with file attachment(s). If permitted by the Contracting Officer, a data diskette may be used instead of E-mail. A signed paper copy of the approved payment request is also required, which shall govern in the event of discrepancy with the electronic version.

1.6.3 Quality Control (QC)

QCS provides a means to track implementation of the 3-phase QC Control System, prepare daily reports, identify and track deficiencies, document progress of work, and support other contractor QC requirements. The Contractor shall maintain this data on a daily basis. Entered data will automatically output to the QCS generated daily report. The Contractor shall provide the Government a Contractor Quality Control (CQC) Plan within the time required in Section 01451A, CONTRACTOR QUALITY CONTROL. Within seven calendar days of Government acceptance, the Contractor shall submit a data diskette or CD-ROM reflecting the information contained in the accepted CQC Plan: schedule, pay activities, features of work, submittal register, QC requirements, and equipment list.

1.6.3.1 Daily Contractor Quality Control (CQC) Reports.

QCS includes the means to produce the Daily CQC Report. The Contractor may use other formats to record basic QC data. However, the Daily CQC Report generated by QCS shall be the Contractor's official report. Data from any supplemental reports by the Contractor shall be summarized and consolidated onto the QCS-generated Daily CQC Report. Daily CQC Reports shall be submitted as required by Section 01451A, CONTRACTOR QUALITY CONTROL. Reports shall be submitted electronically to the Government using E-mail or diskette within 24 hours after the date covered by the report. Use of either mode of submittal shall be coordinated with the Government representative. The Contractor shall also provide the Government a signed, printed copy of the daily CQC report.

1.6.3.2 Deficiency Tracking.

The Contractor shall use QCS to track deficiencies. Deficiencies

identified by the Contractor will be numerically tracked using QC punch list items. The Contractor shall maintain a current log of its QC punch list items in the QCS database. The Government will log the deficiencies it has identified using its QA punch list items. The Government's QA punch list items will be included in its export file to the Contractor. The Contractor shall regularly update the correction status of both QC and QA punch list items.

1.6.3.3 Three-Phase Control Meetings

The Contractor shall maintain scheduled and actual dates and times of preparatory and initial control meetings in QCS.

1.6.3.4 Accident/Safety Tracking.

The Government will issue safety comments, directions, or guidance whenever safety deficiencies are observed. The Government's safety comments will be included in its export file to the Contractor. The Contractor shall regularly update the correction status of the safety comments. In addition, the Contractor shall utilize QCS to advise the Government of any accidents occurring on the jobsite. This brief supplemental entry is not to be considered as a substitute for completion of mandatory reports, e.g., ENG Form 3394 and OSHA Form 300.

1.6.3.5 Features of Work

The Contractor shall include a complete list of the features of work in the QCS database. A feature of work may be associated with multiple pay activities. However, each pay activity (see subparagraph "Pay Activity Data" of paragraph "Finances") will only be linked to a single feature of work.

1.6.3.6 QC Requirements

The Contractor shall develop and maintain a complete list of QC testing, transferred and installed property, and user training requirements in QCS. The Contractor shall update all data on these QC requirements as work progresses, and shall promptly provide this information to the Government via QCS.

1.6.4 Submittal Management

The Government will provide the initial submittal register, ENG Form 4288, SUBMITTAL REGISTER, in electronic format. Thereafter, the Contractor shall maintain a complete list of all submittals, including completion of all data columns. Dates on which submittals are received and returned by the Government will be included in its export file to the Contractor. The Contractor shall use QCS to track and transmit all submittals. ENG Form 4025, submittal transmittal form, and the submittal register update, ENG Form 4288, shall be produced using QCS. RMS will be used to update, store and exchange submittal registers and transmittals, but will not be used for storage of actual submittals.

1.6.5 Schedule

The Contractor shall develop a construction schedule consisting of pay activities, in accordance with Contract Clause "Schedules for Construction Contracts", or Section 01320A, PROJECT SCHEDULE, as applicable. This schedule shall be input and maintained in the QCS database either manually

or by using the Standard Data Exchange Format (SDEF) (see Section 01320A PROJECT SCHEDULE). The updated schedule data shall be included with each pay request submitted by the Contractor.

1.6.6 Import/Export of Data

QCS includes the ability to export Contractor data to the Government and to import submittal register and other Government-provided data, and schedule data using SDEF.

1.7 IMPLEMENTATION

Contractor use of QCS as described in the preceding paragraphs is mandatory. The Contractor shall ensure that sufficient resources are available to maintain its QCS database, and to provide the Government with regular database updates. QCS shall be an integral part of the Contractor's management of quality control.

1.8 DATA SUBMISSION VIA COMPUTER DISKETTE OR CD-ROM

The Government-preferred method for Contractor's submission of updates, payment requests, correspondence and other data is by E-mail with file attachment(s). For locations where this is not feasible, the Contracting Officer may permit use of computer diskettes or CD-ROM for data transfer. Data on the disks or CDs shall be exported using the QCS built-in export function. If used, diskettes and CD-ROMs will be submitted in accordance with the following:

1.8.1 File Medium

The Contractor shall submit required data on 3-1/2 inch double-sided high-density diskettes formatted to hold 1.44 MB of data, capable of running under Microsoft Windows 95 or newer. Alternatively, CD-ROMs may be used. They shall conform to industry standards used in the United States. All data shall be provided in English.

1.8.2 Disk or CD-ROM Labels

The Contractor shall affix a permanent exterior label to each diskette and CD-ROM submitted. The label shall indicate in English, the QCS file name, full contract number, contract name, project location, data date, name and telephone number of person responsible for the data.

1.8.3 File Names

The Government will provide the file names to be used by the Contractor with the QCS software.

1.9 MONTHLY COORDINATION MEETING

The Contractor shall update the QCS database each workday. At least monthly, the Contractor shall generate and submit an export file to the Government with schedule update and progress payment request. As required in Contract Clause "Payments", at least one week prior to submittal, the Contractor shall meet with the Government representative to review the planned progress payment data submission for errors and omissions. The Contractor shall make all required corrections prior to Government acceptance of the export file and progress payment request. Payment requests accompanied by incomplete or incorrect data submittals will be

returned. The Government will not process progress payments until an acceptable QCS export file is received.

1.10 NOTIFICATION OF NONCOMPLIANCE

The Contracting Officer will notify the Contractor of any detected noncompliance with the requirements of this specification. The Contractor shall take immediate corrective action after receipt of such notice. Such notice, when delivered to the Contractor at the work site, shall be deemed sufficient for the purpose of notification.

-- End of Section --

SECTION TABLE OF CONTENTS

DIVISION 01 - GENERAL REQUIREMENTS

SECTION 01320A

PROJECT SCHEDULE

05/02

PART 1 GENERAL

1.1 REFERENCES
1.2 QUALIFICATIONS

PART 2 PRODUCTS (Not Applicable)

PART 3 EXECUTION

3.1 GENERAL REQUIREMENTS
3.2 BASIS FOR PAYMENT
3.3 PROJECT SCHEDULE
3.3.1 Use of the Critical Path Method
3.3.2 Level of Detail Required
3.3.2.1 Activity Durations
3.3.2.2 Design and Permit Activities
3.3.2.3 Procurement Activities
3.3.2.4 Critical Activities
3.3.2.5 Government Activities
3.3.2.6 Responsibility
3.3.2.7 Work Areas
3.3.2.8 Modification or Claim Number
3.3.2.9 Bid Item
3.3.2.10 Phase of Work
3.3.2.11 Category of Work
3.3.2.12 Feature of Work
3.3.3 Scheduled Project Completion
3.3.3.1 Project Start Date
3.3.3.2 Constraint of Last Activity
3.3.3.3 Early Project Completion
3.3.4 Interim Completion Dates
3.3.4.1 Start Phase
3.3.4.2 End Phase
3.3.4.3 Phase X
3.3.5 Default Progress Data Disallowed
3.3.6 Out-of-Sequence Progress
3.3.7 Negative Lags
3.4 PROJECT SCHEDULE SUBMISSIONS
3.4.1 Preliminary Project Schedule Submission
3.4.2 Initial Project Schedule Submission
3.4.3 Periodic Schedule Updates
3.4.4 Standard Activity Coding Dictionary
3.5 SUBMISSION REQUIREMENTS
3.5.1 Data Disks
3.5.1.1 File Medium

3.5.1.2 Disk Label
3.5.1.3 File Name
3.5.2 Narrative Report
3.5.3 Approved Changes Verification
3.5.4 Schedule Reports
3.5.4.1 Activity Report
3.5.4.2 Logic Report
3.5.4.3 Total Float Report
3.5.4.4 Earnings Report
3.5.5 Network Diagram
3.5.5.1 Continuous Flow
3.5.5.2 Project Milestone Dates
3.5.5.3 Critical Path
3.5.5.4 Banding
3.5.5.5 S-Curves
3.6 PERIODIC PROGRESS MEETINGS
3.6.1 Meeting Attendance
3.6.2 Update Submission Following Progress Meeting
3.6.3 Progress Meeting Contents
3.6.3.1 Start and Finish Dates
3.6.3.2 Time Completion
3.6.3.3 Cost Completion
3.6.3.4 Logic Changes
3.6.3.5 Other Changes
3.7 REQUESTS FOR TIME EXTENSIONS
3.7.1 Justification of Delay
3.7.2 Submission Requirements
3.7.3 Additional Submission Requirements
3.8 DIRECTED CHANGES
3.9 OWNERSHIP OF FLOAT

-- End of Section Table of Contents --

SECTION 01320A

PROJECT SCHEDULE
05/02

PART 1 GENERAL

1.1 REFERENCES

The publications listed below form a part of the specification to the extent referenced. The publications are referenced in the text by basic designation only.

U.S. ARMY CORPS OF ENGINEERS (USACE)

ER 1-1-11	(1995) Progress, Schedules, and Network Analysis Systems

1.2 QUALIFICATIONS

The Contractor shall designate an authorized representative who shall be responsible for the preparation of all required project schedule reports.

PART 2 PRODUCTS (Not Applicable)

PART 3 EXECUTION

3.1 GENERAL REQUIREMENTS

Pursuant to the Contract Clause, SCHEDULE FOR CONSTRUCTION CONTRACTS, a Project Schedule as described below shall be prepared. The scheduling of constructiondesign and construction shall be the responsibility of the Contractor. Contractor management personnel shall actively participate in its development. Subcontractors and suppliersDesigners, Subcontractors and suppliers working on the project shall also contribute in developing and maintaining an accurate Project Schedule. The approved Project Schedule shall be used to measure the progress of the work, to aid in evaluating time extensions, and to provide the basis of all progress payments.

3.2 BASIS FOR PAYMENT

The schedule shall be the basis for measuring Contractor progress. Lack of an approved schedule or scheduling personnel will result in an inability of the Contracting Officer to evaluate Contractor's progress for the purposes of payment. Failure of the Contractor to provide all information, as specified below, shall result in the disapproval of the entire Project Schedule submission and the inability of the Contracting Officer to evaluate Contractor progress for payment purposes. In the case where Project Schedule revisions have been directed by the Contracting Officer and those revisions have not been included in the Project Schedule, the Contracting Officer may hold retainage up to the maximum allowed by contract, each payment period, until revisions to the Project Schedule have been made.

3.3 PROJECT SCHEDULE

The computer software system utilized by the Contractor to produce the Project Schedule shall be capable of providing all requirements of this specification. Failure of the Contractor to meet the requirements of this specification shall result in the disapproval of the schedule. Manual methods used to produce any required information shall require approval by the Contracting Officer. The Contractor shall provide a copy of the software and a license to the ACO until final payment of the saftware used to develop the schedule.

3.3.1 Use of the Critical Path Method

The Critical Path Method (CPM) of network calculation shall be used to generate the Project Schedule. The Contractor shall provide the Project Schedule in the Precedence Diagram Method (PDM).

3.3.2 Level of Detail Required

The Project Schedule shall include an appropriate level of detail. Failure to develop or update the Project Schedule or provide data to the Contracting Officer at the appropriate level of detail, as specified by the Contracting Officer, shall result in the disapproval of the schedule. The Contracting Officer will use, but is not limited to, the following conditions to determine the appropriate level of detail to be used in the Project Schedule:

3.3.2.1 Activity Durations

Contractor submissions shall follow the direction of the Contracting Officer regarding reasonable activity durations. Reasonable durations are those that allow the progress of activities to be accurately determined between payment periods (usually less than 2 percent of all non-procurement activities' Original Durations are greater than 20 days).

3.3.2.2 Design and Permit Activities

Design and permitting activities, including necessary conferences and follow-up actions and design package submission dates, shall be integrated into the schedule.

3.3.2.3 Procurement Activities

Tasks related to the procurement of long lead materials or equipment shall be included as separate activities in the project schedule. Long lead materials and equipment are those materials that have a procurement cycle of over 90 days. Examples of procurement process activities include, but are not limited to: submittals, approvals, procurement, fabrication, and delivery.

3.3.2.4 Critical Activities

The following activities shall be listed as separate line activities on the Contractor's project schedule:

a. Submission and approval of mechanical/electrical layout drawings.

b. Submission and approval of O & M manuals.

c. Submission and approval of as-built drawings.

d. Submission and approval of 1354 data and installed equipment lists.

e. Submission and approval of testing and air balance (TAB).

f. Submission of TAB specialist design review report.

g. Submission and approval of fire protection specialist.

h. Submission and approval of testing and balancing of HVAC plus commissioning plans and data.

i. Air and water balance dates.

j. HVAC commissioning dates.

k. Controls testing plan.

l. Controls testing.

m. Performance Verification testing.

n. Other systems testing, if required.

o. Prefinal inspection.

p. Correction of punchlist from prefinal inspection.

q. Final inspection.

3.3.2.5 Government Activities

Government and other agency activities that could impact progress shall be shown. These activities include, but are not limited to: approvals, approvals, design reviews, environmental permit approvals by State regulators, inspections, utility tie-in, Government Furnished Equipment (GFE) and Notice to Proceed (NTP) for phasing requirements.

3.3.2.6 Responsibility

All activities shall be identified in the project schedule by the party responsible to perform the work. Responsibility includes, but is not limited to, the subcontracting firm, contractor work force, or government agency performing a given task. Activities shall not belong to more than one responsible party. The responsible party for each activity shall be identified by the Responsibility Code.

3.3.2.7 Work Areas

All activities shall be identified in the project schedule by the work area in which the activity occurs. Activities shall not be allowed to cover more than one work area. The work area of each activity shall be identified by the Work Area Code.

3.3.2.8 Modification or Claim Number

Any activity that is added or changed by contract modification or used to justify claimed time shall be identified by a mod or claim code that

changed the activity. Activities shall not belong to more than one modification or claim item. The modification or claim number of each activity shall be identified by the Mod or Claim Number. Whenever possible, changes shall be added to the schedule by adding new activities. Existing activities shall not normally be changed to reflect modifications.

3.3.2.9 Bid Item

All activities shall be identified in the project schedule by the Bid Item to which the activity belongs. An activity shall not contain work in more than one bid item. The bid item for each appropriate activity shall be identified by the Bid Item Code.

3.3.2.10 Phase of Work

All activities shall be identified in the project schedule by the phases of work in which the activity occurs. Activities shall not contain work in more than one phase of work. The project phase of each activity shall be by the unique Phase of Work Code.

3.3.2.11 Category of Work

All Activities shall be identified in the project schedule according to the category of work which best describes the activity. Category of work refers, but is not limited, to the procurement chain of activities including such items as submittalsdesigns, design package submissions design reviews, review conferences, permits, submittals, approvals, procurement, fabrication, delivery, installation, start-up, and testing. The category of work for each activity shall be identified by the Category of Work Code.

3.3.2.12 Feature of Work

All activities shall be identified in the project schedule according to the feature of work to which the activity belongs. Feature of work refers, but is not limited to, a work breakdown structure for the project. The feature of work for each activity shall be identified by the Feature of Work Code.

3.3.3 Scheduled Project Completion

The schedule interval shall extend from NTP to the contract completion date.

3.3.3.1 Project Start Date

The schedule shall start no earlier than the date on which the NTP was acknowledged. The Contractor shall include as the first activity in the project schedule an activity called "Start Project". The "Start Project" activity shall have an "ES" constraint date equal to the date that the NTP was acknowledged, and a zero day duration.

3.3.3.2 Constraint of Last Activity

Completion of the last activity in the schedule shall be constrained by the contract completion date. Calculation on project updates shall be such that if the early finish of the last activity falls after the contract completion date, then the float calculation shall reflect a negative float on the critical path. The Contractor shall include as the last activity in the project schedule an activity called "End Project". The "End Project" activity shall have an "LF" constraint date equal to the completion date

for the project, and a zero day duration.

3.3.3.3 Early Project Completion

In the event the project schedule shows completion of the project prior to the contract completion date, the Contractor shall identify those activities that have been accelerated and/or those activities that are scheduled in parallel to support the Contractor's "early" completion. Contractor shall specifically address each of the activities noted in the narrative report at every project schedule update period to assist the Contracting Officer in evaluating the Contractor's ability to actually complete prior to the contract period.

3.3.4 Interim Completion Dates

Contractually specified interim completion dates shall also be constrained to show negative float if the early finish date of the last activity in that phase falls after the interim completion date.

3.3.4.1 Start Phase

The Contractor shall include as the first activity for a project phase an activity called "Start Phase X" where "X" refers to the phase of work. The "Start Phase X" activity shall have an "ES" constraint date equal to the date on which the NTP was acknowledged, and a zero day duration.

3.3.4.2 End Phase

The Contractor shall include as the last activity in a project phase an activity called "End Phase X" where "X" refers to the phase of work. The "End Phase X" activity shall have an "LF" constraint date equal to the completion date for the project, and a zero day duration.

3.3.4.3 Phase X

The Contractor shall include a hammock type activity for each project phase called "Phase X" where "X" refers to the phase of work. The "Phase X" activity shall be logically tied to the earliest and latest activities in the phase.

3.3.5 Default Progress Data Disallowed

Actual Start and Finish dates shall not be automatically updated by default mechanisms that may be included in CPM scheduling software systems. Actual Start and Finish dates on the CPM schedule shall match those dates provided from Contractor Quality Control Reports. Failure of the Contractor to document the Actual Start and Finish dates on the Daily Quality Control report for every in-progress or completed activity, and failure to ensure that the data contained on the Daily Quality Control reports is the sole basis for schedule updating shall result in the disapproval of the Contractor's schedule and the inability of the Contracting Officer to evaluate Contractor progress for payment purposes. Updating of the percent complete and the remaining duration of any activity shall be independent functions. Program features which calculate one of these parameters from the other shall be disabled.

3.3.6 Out-of-Sequence Progress

Activities that have posted progress without all preceding logic being

satisfied (Out-of-Sequence Progress) will be allowed only on a case-by-case approval of the Contracting Officer. The Contractor shall propose logic corrections to eliminate all out of sequence progress or justify not changing the sequencing for approval prior to submitting an updated project schedule.

3.3.7 Negative Lags

Lag durations contained in the project schedule shall not have a negative value.

3.4 PROJECT SCHEDULE SUBMISSIONS

The Contractor shall provide the submissions as described below. The data disk, reports, and network diagrams required for each submission are contained in paragraph SUBMISSION REQUIREMENTS.

3.4.1 Preliminary Project Schedule Submission

The Preliminary Project Schedule, defining the Contractor's planned operations for the first 60 calendar days shall be submitted for approval within 10 calendar days after the NTP is acknowledged. The approved preliminary schedule shall be used for payment purposes not to exceed 60 calendar days after NTP.

3.4.2 Initial Project Schedule Submission

The Initial Project Schedule shall be submitted for approval within 40 calendar days after NTP. The schedule shall provide a reasonable sequence of activities which represent work through the entire project and shall be at a reasonable level of detail.

3.4.3 Periodic Schedule Updates

Based on the result of progress meetings, specified in "Periodic Progress Meetings," the Contractor shall submit periodic schedule updates. These submissions shall enable the Contracting Officer to assess Contractor's progress. If the Contractor fails or refuses to furnish the information and project schedule data, which in the judgement of the Contracting Officer or authorized representative is necessary for verifying the Contractor's progress, the Contractor shall be deemed not to have provided an estimate upon which progress payment may be made.

3.4.4 Standard Activity Coding Dictionary

The Contractor shall use the activity coding structure defined in the Standard Data Exchange Format (SDEF) in ER 1-1-11, Appendix A. This exact structure is mandatory, even if some fields are not used.

3.5 SUBMISSION REQUIREMENTS

The following items shall be submitted by the Contractor for the preliminary submission, initial submission, and every periodic project schedule update throughout the life of the project:

3.5.1 Data Disks

Two data disks containing the project schedule shall be provided. Data on the disks shall adhere to the SDEF format specified in ER 1-1-11, Appendix

A.

3.5.1.1 File Medium

Required data shall be submitted on 3.5 disks, formatted to hold 1.44 MB of data, under the MS-DOS Version 5. or 6.x, unless otherwise approved by the Contracting Officer.

3.5.1.2 Disk Label

A permanent exterior label shall be affixed to each disk submitted. The label shall indicate the type of schedule (Preliminary, Initial, Update, or Change), full contract number, project name, project location, data date, name and telephone number of person responsible for the schedule, and the MS-DOS version used to format the disk.

3.5.1.3 File Name

Each file submitted shall have a name related to either the schedule data date, project name, or contract number. The Contractor shall develop a naming convention that will ensure that the names of the files submitted are unique. The Contractor shall submit the file naming convention to the Contracting Officer for approval.

3.5.2 Narrative Report

A Narrative Report shall be provided with the preliminary, initial, and each update of the project schedule. This report shall be provided as the basis of the Contractor's progress payment request. The Narrative Report shall include: a description of activities along the two most critical paths, a description of current and anticipated problem areas or delaying factors and their impact, and an explanation of corrective actions taken or required to be taken. The narrative report is expected to relay to the Government, the Contractor's thorough analysis of the schedule output and its plans to compensate for any problems, either current or potential, which are revealed through that analysis.

3.5.3 Approved Changes Verification

Only project schedule changes that have been previously approved by the Contracting Officer shall be included in the schedule submission. The Narrative Report shall specifically reference, on an activity by activity basis, all changes made since the previous period and relate each change to documented, approved schedule changes.

3.5.4 Schedule Reports

The format for each activity for the schedule reports listed below shall contain: Activity Numbers, Activity Description, Original Duration, Remaining Duration, Early Start Date, Early Finish Date, Late Start Date, Late Finish Date, Total Float. Actual Start and Actual Finish Dates shall be printed for those activities in progress or completed.

3.5.4.1 Activity Report

A list of all activities sorted according to activity number.

3.5.4.2 Logic Report

A list of Preceding and Succeeding activities for every activity in ascending order by activity number. Preceeding and succeeding activities shall include all information listed above in paragraph Schedule Reports. A blank line shall be left between each activity grouping.

3.5.4.3 Total Float Report

A list of all incomplete activities sorted in ascending order of total float. Activities which have the same amount of total float shall be listed in ascending order of Early Start Dates. Completed activities shall not be shown on this report.

3.5.4.4 Earnings Report

A compilation of the Contractor's Total Earnings on the project from the NTP until the most recent Monthly Progress Meeting. This report shall reflect the Earnings of specific activities based on the agreements made in the field and approved between the Contractor and Contracting Officer at the most recent Monthly Progress Meeting. Provided that the Contractor has provided a complete schedule update, this report shall serve as the basis of determining Contractor Payment. Activities shall be grouped by bid item and sorted by activity numbers. This report shall: sum all activities in a bid item and provide a bid item percent; and complete and sum all bid items to provide a total project percent complete. The printed report shall contain, for each activity: the Activity Number, Activity Description, Original Budgeted Amount, Total Quantity, Quantity to Date, Percent Complete (based on cost), and Earnings to Date.

3.5.5 Network Diagram

The network diagram shall be required on the initial schedule submission and on monthly schedule update submissions. The network diagram shall depict and display the order and interdependence of activities and the sequence in which the work is to be accomplished. The Contracting Officer will use, but is not limited to, the following conditions to review compliance with this paragraph:

3.5.5.1 Continuous Flow

Diagrams shall show a continuous flow from left to right with no arrows from right to left. The activity number, description, duration, and estimated earned value shall be shown on the diagram.

3.5.5.2 Project Milestone Dates

Dates shall be shown on the diagram for start of project, any contract required interim completion dates, and contract completion dates.

3.5.5.3 Critical Path

The critical path shall be clearly shown.

3.5.5.4 Banding

Activities shall be grouped to assist in the understanding of the activity sequence. Typically, this flow will group activities by category of work, work area and/or responsibility.

3.5.5.5 S-Curves

Earnings curves showing projected early and late earnings and earnings to date.

3.6 PERIODIC PROGRESS MEETINGS

Progress meetings to discuss payment shall include a monthly onsite meeting or other regular intervals mutually agreed to at the preconstruction conference. During this meeting the Contractor shall describe, on an activity by activity basis, all proposed revisions and adjustments to the project schedule required to reflect the current status of the project. The Contracting Officer will approve activity progress, proposed revisions, and adjustments as appropriate.

3.6.1 Meeting Attendance

The Contractor's Project Manager and Scheduler shall attend the regular progress meeting.

3.6.2 Update Submission Following Progress Meeting

A complete update of the project schedule containing all approved progress, revisions, and adjustments, based on the regular progress meeting, shall be submitted not later than 4 working days after the monthly progress meeting.

3.6.3 Progress Meeting Contents

Update information, including Actual Start Dates, Actual Finish Dates, Remaining Durations, and Cost-to-Date shall be subject to the approval of the Contracting Officer. As a minimum, the Contractor shall address the following items on an activity by activity basis during each progress meeting.

3.6.3.1 Start and Finish Dates

The Actual Start and Actual Finish dates for each activity currently in-progress or completed .

3.6.3.2 Time Completion

The estimated Remaining Duration for each activity in-progress. Time-based progress calculations shall be based on Remaining Duration for each activity.

3.6.3.3 Cost Completion

The earnings for each activity started. Payment will be based on earnings for each in-progress or completed activity. Payment for individual activities will not be made for work that contains quality defects. A portion of the overall project amount may be retained based on delays of activities.

3.6.3.4 Logic Changes

All logic changes pertaining to NTP on change orders, change orders to be incorporated into the schedule, contractor proposed changes in work sequence, corrections to schedule logic for out-of-sequence progress, lag

durations, and other changes that have been made pursuant to contract provisions shall be specifically identified and discussed.

3.6.3.5 Other Changes

Other changes required due to delays in completion of any activity or group of activities include: 1) delays beyond the Contractor's control, such as strikes and unusual weather. 2) delays encountered due to submittals, Government Activities, deliveries or work stoppages which make re-planning the work necessary. 3) Changes required to correct a schedule which does not represent the actual or planned prosecution and progress of the work.

3.7 REQUESTS FOR TIME EXTENSIONS

In the event the Contractor requests an extension of the contract completion date, or any interim milestone date, the Contractor shall furnish the following for a determination as to whether or not the Contractor is entitled to an extension of time under the provisions of the contract: justification, project schedule data, and supporting evidence as the Contracting Officer may deem necessary. Submission of proof of delay, based on revised activity logic, duration, and costs (updated to the specific date that the delay occurred) is obligatory to any approvals.

3.7.1 Justification of Delay

The project schedule shall clearly display that the Contractor has used, in full, all the float time available for the work involved with this request. The Contracting Officer's determination as to the number of allowable days of contract extension shall be based upon the project schedule updates in effect for the time period in question, and other factual information. Actual delays that are found to be caused by the Contractor's own actions, which result in the extension of the schedule, will not be a cause for a time extension to the contract completion date.

3.7.2 Submission Requirements

The Contractor shall submit a justification for each request for a change in the contract completion date of under 2 weeks based upon the most recent schedule update at the time of the NTP or constructive direction issued for the change. Such a request shall be in accordance with the requirements of other appropriate Contract Clauses and shall include, as a minimum:

a. A list of affected activities, with their associated project schedule activity number.

b. A brief explanation of the causes of the change.

c. An analysis of the overall impact of the changes proposed.

d. A sub-network of the affected area.

Activities impacted in each justification for change shall be identified by a unique activity code contained in the required data file.

3.7.3 Additional Submission Requirements

For any requested time extension of over 2 weeks, the Contracting Officer may request an interim update with revised activities for a specific change request. The Contractor shall provide this disk within 4 days of the

Contracting Officer's request.

3.8 DIRECTED CHANGES

If the NTP is issued for changes prior to settlement of price and/or time, the Contractor shall submit proposed schedule revisions to the Contracting Officer within 2 weeks of the NTP being issued. The proposed revisions to the schedule will be approved by the Contracting Officer prior to inclusion of those changes within the project schedule. If the Contractor fails to submit the proposed revisions, the Contracting Officer may furnish the Contractor with suggested revisions to the project schedule. The Contractor shall include these revisions in the project schedule until revisions are submitted, and final changes and impacts have been negotiated. If the Contractor has any objections to the revisions furnished by the Contracting Officer, the Contractor shall advise the Contracting Officer within 2 weeks of receipt of the revisions. Regardless of the objections, the Contractor shall continue to update the schedule with the Contracting Officer's revisions until a mutual agreement in the revisions is reached. If the Contractor fails to submit alternative revisions within 2 weeks of receipt of the Contracting Officer's proposed revisions, the Contractor will be deemed to have concurred with the Contracting Officer's proposed revisions. The proposed revisions will then be the basis for an equitable adjustment for performance of the work.

3.9 OWNERSHIP OF FLOAT

Float available in the schedule, at any time, shall not be considered for the exclusive use of either the Government or the Contractor.

-- End of Section --

SECTION TABLE OF CONTENTS

DIVISION 01 - GENERAL REQUIREMENTS

SECTION 01330

SUBMITTAL PROCEDURES

05/02

PART 1 GENERAL

1.1 SUBMITTAL IDENTIFICATION (SD)

-- End of Section Table of Contents --

SECTION 01330

SUBMITTAL PROCEDURES
05/02

PART 1 GENERAL

1.1 SUBMITTAL IDENTIFICATION (SD)

Submittals required are identified by SD numbers and titles as follows:

SD-01 Preconstruction Submittals

SD-02 Shop Drawings

SD-03 Product Data

SD-04 Samples

SD-05 Design Data

SD-06 Test Reports

SD-07 Certificates

SD-08 Manufacturer's Instructions

SD-09 Manufacturer's Field Reports

SD-10 Operation and Maintenance Data

SD-11 Closeout Submittals

-- End of Section --

SUBMITTAL REGISTER

CONTRACT NO.

TITLE AND LOCATION
FY04 DORMITORIES, SEYMOUR JOHNSON AFB, NC

CONTRACTOR

ACTIVITY NO	TRANSMITTAL NO	SPEC SECT	DESCRIPTION ITEM SUBMITTED	PARAGRAPH #	CLASSIFICATION	GOVT OR A/E REVWR	CONTRACTOR: SCHEDULE DATES			CONTRACTOR ACTION			APPROVING AUTHORITY					MAILED TO CONTR/ DATE RCD FRM APPR AUTH	REMARKS
							SUBMIT	APPROVAL NEEDED BY	MATERIAL NEEDED BY	ACTION CODE	DATE OF ACTION	DATE FWD TO APPR AUTH/ DATE RCD FROM CONTR	DATE FWD TO OTHER REVIEWER	DATE RCD FROM OTH REVIEWER	ACTION CODE	DATE OF ACTION		
(a)	(b)	(c)	(d)	(e)	(f)		(g)	(h)	(i)	(j)	(k)	(l)	(m)	(n)	(o)	(p)	(q)	(r)
		01335	SD-01 Preconstruction Submittals															
			LEED Compliance Plan; G, RE		FIO													
			SD-05 Design Data															
			LEED Calculations		FIO													
			SD-11 Closeout Submittals															
			LEED Documentation Notebook		FIO													
		01355A	SD-01 Preconstruction Submittals															
			Environmental Protection Plan	1.7	G RE													
		01780A	SD-02 Shop Drawings															
			As-Built Drawings	1.2.1	G RE													
			SD-03 Product Data															
			As-Built Record of Equipment and	1.2.2	G RE													
			Materials															
			Warranty Management Plan	1.3.1	G RE													
			Warranty Tags	1.3.5	FIO													
			Final Cleaning	1.6	FIO													
		02220	SD-03 Product Data															
			Work Plan		G													
			SD-07 Certificates															
			Demolition plan	1.10	G													
			Notifications	1.4.1	G													
			SD-11 Closeout Submittals															
			Receipts	1.4.2	FIO													
		02300A	SD-03 Product Data															
			Earthwork		FIO													
			SD-06 Test Reports															

SUBMITTAL REGISTER

CONTRACT NO.

TITLE AND LOCATION
FY04 DORMITORIES, SEYMOUR JOHNSON AFB, NC

CONTRACTOR

ACTIVITY NO	TRANSMITTAL NO	SPEC SECT	DESCRIPTION ITEM SUBMITTED	PARAGRAPH #	CLASSIFICATION	GOVT OR A/E REVWR	CONTRACTOR: SCHEDULE DATES			CONTRACTOR ACTION			APPROVING AUTHORITY					MAILED TO CONTR/ DATE RCD FRM APPR AUTH	REMARKS
							SUBMIT	APPROVAL NEEDED BY	MATERIAL NEEDED BY	ACTION CODE	DATE OF ACTION	DATE FWD TO APPR AUTH/ DATE RCD FROM CONTR	DATE FWD TO OTHER REVIEWER	DATE RCD FROM OTH REVIEWER	ACTION CODE	DATE OF ACTION		
(a)	(b)	(c)	(d)	(e)	(f)		(g)	(h)	(i)	(j)	(k)	(l)	(m)	(n)	(o)	(p)	(q)	(r)
		02300A	Testing	3.13	G													
		02315A	SD-06 Test Reports															
			Testing	3.14	G													
		02316A	SD-06 Test Reports															
			Field Density Tests	3.4.3	G													
			Testing of Backfill Materials	3.4.2	FIO													
		02364A	SD-03 Product Data															
			Termiticide Application Plan		FIO													
			Termiticides	2.1	FIO													
			Foundation Exterior	3.2.3	FIO													
			Utilities and Vents		FIO													
			Verification of Measurement	3.5	FIO													
			Application Equipment	3.4.1	FIO													
			SD-06 Test Reports															
			Equipment Calibration and Tank	3.4.1	FIO													
			Measurement															
			Soil Moisture	3.3.1	FIO													
			SD-07 Certificates															
			Qualifications	1.2	FIO													
		02510A	SD-03 Product Data															
			Installation	3.1	FIO													
			SD-06 Test Reports															
			Bacterial Disinfection	3.3	G													
			SD-07 Certificates															
			Installation	3.1	FIO													
		02531	SD-02 Shop Drawings															

SUBMITTAL REGISTER

CONTRACT NO.

TITLE AND LOCATION
FY04 DORMITORIES, SEYMOUR JOHNSON AFB, NC

CONTRACTOR

ACTIVITY NO	TRANSMITTAL NO	SPEC SECT	DESCRIPTION ITEM SUBMITTED	PARAGRAPH #	CLASSIFICATION	GOVT OR A/E REVWR	CONTRACTOR: SCHEDULE DATES			CONTRACTOR ACTION			APPROVING AUTHORITY					REMARKS
							SUBMIT	APPROVAL NEEDED BY	MATERIAL NEEDED BY	ACTION CODE	DATE OF ACTION	DATE FWD TO APPR AUTH/ DATE RCD FROM CONTR	DATE FWD TO OTHER REVIEWER	DATE RCD FROM OTH REVIEWER	ACTION CODE	DATE OF ACTION	MAILED TO CONTR/ DATE RCD FRM APPR AUTH	
(a)	(b)	(c)	(d)	(e)	(f)		(g)	(h)	(i)	(j)	(k)	(l)	(m)	(n)	(o)	(p)	(q)	(r)
		02531	Precast concrete manholes	2.3.1	FIO													
			Metal items	2.3.4	FIO													
			Frames, covers, and gratings	2.3.4.1	FIO													
			SD-03 Product Data															
			Pipeline materials	2.1	FIO													
		02547	SD-04 Samples															
			Pavement Samples and Plant		FIO													
			Mixtures															
			SD-06 Test Reports															
			Tests		FIO													
			SD-07 Certificates															
			Waybills and Delivery Tickets		FIO													
		02555A	SD-02 Shop Drawings															
			Distribution System	3.5.9	FIO													
			SD-03 Product Data															
			Distribution System	3.5.9	FIO													
			SD-07 Certificates															
			Distribution System	3.5.9	FIO													
			Welding	1.6	FIO													
			SD-10 Operation and Maintenance															
			Data															
			Distribution System	3.5.9	FIO													
		02630A	SD-03 Product Data															
			Placing Pipe	3.3	FIO													
			SD-07 Certificates															
			Resin Certification	2.1.8	FIO													

SUBMITTAL REGISTER

CONTRACT NO.

TITLE AND LOCATION
FY04 DORMITORIES, SEYMOUR JOHNSON AFB, NC

CONTRACTOR

ACTIVITY NO	TRANSMITTAL NO	SPEC SECT	DESCRIPTION ITEM SUBMITTED	PARAGRAPH #	CLASSIFICATION	GOVT OR A/E REVWR	CONTRACTOR: SCHEDULE DATES			CONTRACTOR ACTION			APPROVING AUTHORITY					MAILED TO CONTR/ DATE RCD FRM APPR AUTH	REMARKS
							SUBMIT	APPROVAL NEEDED BY	MATERIAL NEEDED BY	ACTION CODE	DATE OF ACTION	DATE FWD TO APPR AUTH/ DATE RCD FROM CONTR	DATE FWD TO OTHER REVIEWER	DATE RCD FROM OTH REVIEWER	ACTION CODE	DATE OF ACTION		
(a)	(b)	(c)	(d)	(e)	(f)		(g)	(h)	(i)	(j)	(k)	(l)	(m)	(n)	(o)	(p)	(q)	(r)
		02630A	Pipeline Testing		FIO													
			Frame and Cover for Gratings	2.3.7	FIO													
		02763A	SD-03 Product Data															
			Equipment	1.5	G													
			Composition Requirements	2.2.1	FIO													
			Qualifications		FIO													
			SD-07 Certificates															
			Volatile Organic Compound	2.2.3	FIO													
			(VOC)															
		02770A	SD-03 Product Data															
			Concrete	2.1	G RE													
			SD-06 Test Reports															
			Field Quality Control	3.8	G RE													
		02792	SD-03 Product Data															
			Synthetic Surfacing	2.2	FIO													
			Manufacturer's Qualification	1.7	FIO													
			Temperature Limitation	3.2.1	FIO													
			Fluid-applied surfacing		FIO													
			Color	2.2.5	FIO													
			SD-06 Test Reports															
			Synthetic Surfacing	2.2	FIO													
			SD-07 Certificates															
			Materials	2.1	FIO													
			Installer's Qualification	1.8	FIO													
			SD-10 Operation and Maintenance															
			Data															

SUBMITTAL REGISTER

CONTRACT NO.

TITLE AND LOCATION
FY04 DORMITORIES, SEYMOUR JOHNSON AFB, NC

CONTRACTOR

ACTIVITY NO	TRANSMITTAL NO	SPEC SECT	DESCRIPTION ITEM SUBMITTED	PARAGRAPH #	CLASSIFICATION	GOVT OR A/E REVWR	CONTRACTOR: SCHEDULE DATES			CONTRACTOR ACTION			APPROVING AUTHORITY					MAILED TO CONTR/ DATE RCD FRM APPR AUTH	REMARKS
							SUBMIT	APPROVAL NEEDED BY	MATERIAL NEEDED BY	ACTION CODE	DATE OF ACTION	DATE FWD TO APPR AUTH/ DATE RCD FROM CONTR	DATE FWD TO OTHER REVIEWER	DATE RCD FROM OTH REVIEWER	ACTION CODE	DATE OF ACTION		
(a)	(b)	(c)	(d)	(e)	(f)		(g)	(h)	(i)	(j)	(k)	(l)	(m)	(n)	(o)	(p)	(q)	(r)
		02792	Maintenance Instruction	3.5.3	G RE													
		02870A	SD-02 Shop Drawings															
			Site Furnishing Standards	2.5	FIO													
			SD-03 Product Data															
			Site Furnishings	1.4	FIO													
			Installation	3.1	FIO													
			Materials	2.1	FIO													
			SD-04 Samples															
			Finish	2.4	FIO													
			SD-06 Test Reports															
			Recycled Material	2.1.5	FIO													
		02921A	SD-03 Product Data															
			Equipment	3.1.3	FIO													
			Surface Erosion Control Material	2.8	FIO													
			Chemical Treatment Material	1.4.3	FIO													
			Delivery	1.4.1	FIO													
			Finished Grade and Topsoil	3.2.1	FIO													
			Topsoil	2.2	FIO													
			Quantity Check	3.5	FIO													
			Seed Establishment Period	3.9	FIO													
			Maintenance Record	3.9.3.5	FIO													
			Application of Pesticide	3.6	FIO													
			SD-04 Samples															
			Delivered Topsoil	1.4.1.1	FIO													
			Soil Amendments	2.3	FIO													
			Mulch	2.4	FIO													

SUBMITTAL REGISTER

CONTRACT NO.

TITLE AND LOCATION
FY04 DORMITORIES, SEYMOUR JOHNSON AFB, NC

CONTRACTOR

ACTIVITY NO	TRANSMITTAL NO	SPEC SECT	DESCRIPTION ITEM SUBMITTED	PARAGRAPH #	CLASSIFICATION	GOVT OR A/E REVWR	CONTRACTOR: SCHEDULE DATES			CONTRACTOR ACTION			APPROVING AUTHORITY					MAILED TO CONTR/ DATE RCD FRM APPR AUTH	REMARKS
							SUBMIT	APPROVAL NEEDED BY	MATERIAL NEEDED BY	ACTION CODE	DATE OF ACTION	DATE FWD TO APPR AUTH/ DATE RCD FROM CONTR	DATE FWD TO OTHER REVIEWER	DATE RCD FROM OTH REVIEWER	ACTION CODE	DATE OF ACTION		
(a)	(b)	(c)	(d)	(e)	(f)		(g)	(h)	(i)	(j)	(k)	(l)	(m)	(n)	(o)	(p)	(q)	(r)
		02921A	SD-06 Test Reports															
			Equipment Calibration	3.1.3	FIO													
			Soil Test	3.1.4	FIO													
			SD-07 Certificates															
			Seed	2.1	FIO													
			Topsoil	2.2	FIO													
			pH Adjuster	2.3.1	FIO													
			Fertilizer	2.3.2	FIO													
			Organic Material	2.3.4	FIO													
			Soil Conditioner	2.3.5	FIO													
			Mulch	2.4	FIO													
			Pesticide	2.7	FIO													
		02922A	SD-03 Product Data															
			Equipment	3.1.3	FIO													
			Chemical Treatment Material	1.4.3.2	FIO													
			Delivery	1.4.1	FIO													
			Finished Grade and Topsoil	3.2.1	FIO													
			Topsoil	2.2	FIO													
			Quantity Check	3.5	FIO													
			Sod Establishment Period	3.9	FIO													
			Maintenance Record	3.9.3.5	FIO													
			Application of Pesticide	3.6	FIO													
			SD-04 Samples															
			Delivered Topsoil	1.4.1.2	FIO													
			Soil Amendments	2.3	FIO													
			Temporary Seeding	3.4	FIO													

SUBMITTAL REGISTER

CONTRACT NO.

TITLE AND LOCATION
FY04 DORMITORIES, SEYMOUR JOHNSON AFB, NC

CONTRACTOR

ACTIVITY NO	TRANSMITTAL NO	SPEC SECT	DESCRIPTION ITEM SUBMITTED	PARAGRAPH #	CLASSIFICATION	GOVT OR A/E REVWR	CONTRACTOR: SCHEDULE DATES			CONTRACTOR ACTION			APPROVING AUTHORITY					
							SUBMIT	APPROVAL NEEDED BY	MATERIAL NEEDED BY	ACTION CODE	DATE OF ACTION	DATE FWD TO APPR AUTH/ DATE RCD FROM CONTR	DATE FWD TO OTHER REVIEWER	DATE RCD FROM OTH REVIEWER	ACTION CODE	DATE OF ACTION	MAILED TO CONTR/ DATE RCD FRM APPR AUTH	REMARKS
(a)	(b)	(c)	(d)	(e)	(f)		(g)	(h)	(i)	(j)	(k)	(l)	(m)	(n)	(o)	(p)	(q)	(r)
		02922A	SD-06 Test Reports															
			Equipment Calibration	3.1.3	FIO													
			Soil Test	3.1.4	FIO													
			SD-07 Certificates															
			Sod	2.1	FIO													
			Topsoil	2.2	FIO													
			pH Adjuster	2.3.1	FIO													
			Fertilizer	2.3.2	FIO													
			Organic Material	2.3.4	FIO													
			Soil Conditioner	2.3.5	FIO													
			Pesticide	2.5	FIO													
		02930A	SD-02 Shop Drawings															
			Shop Drawings	3.3.1	FIO													
			Finished Grade, Topsoil and	3.2.1	FIO													
			Underground Utilities															
			SD-03 Product Data															
			Geotextile	2.5	FIO													
			Chemical Treatment Material	1.4.3.2	FIO													
			Equipment	3.7.2	FIO													
			Delivery	1.4.1	FIO													
			Plant Establishment Period	3.9	FIO													
			Maintenance Record	3.9.2.6	FIO													
			Application of Pesticide	3.7	FIO													
			SD-04 Samples															
			Delivered Topsoil	1.4.1.3	FIO													
			Soil Amendments	3.1.4.2	FIO													

SUBMITTAL REGISTER

CONTRACT NO.

TITLE AND LOCATION
FY04 DORMITORIES, SEYMOUR JOHNSON AFB, NC

CONTRACTOR

ACTIVITY NO	TRANSMITTAL NO	SPEC SECT	DESCRIPTION ITEM SUBMITTED	PARAGRAPH #	CLASSIFICATION	GOVT OR A/E REVWR	CONTRACTOR: SCHEDULE DATES			CONTRACTOR ACTION			APPROVING AUTHORITY					MAILED TO CONTR/ DATE RCD FRM APPR AUTH	REMARKS
							SUBMIT	APPROVAL NEEDED BY	MATERIAL NEEDED BY	ACTION CODE	DATE OF ACTION	DATE FWD TO APPR AUTH/ DATE RCD FROM CONTR	DATE FWD TO OTHER REVIEWER	DATE RCD FROM OTH REVIEWER	ACTION CODE	DATE OF ACTION		
(a)	(b)	(c)	(d)	(e)	(f)		(g)	(h)	(i)	(j)	(k)	(l)	(m)	(n)	(o)	(p)	(q)	(r)
		02930A	Mulch	2.4	FIO													
			Geotextile	2.5	FIO													
			SD-06 Test Reports															
			Soil Test	3.1.4.2	FIO													
			Percolation Test	3.1.4.1	FIO													
			SD-07 Certificates															
			Plant Material	2.1	FIO													
			Topsoil	2.2	FIO													
			pH Adjuster	2.3.1	FIO													
			Fertilizer	2.3.2	FIO													
			Organic Material	2.3.3	FIO													
			Soil Conditioner	2.3.4	FIO													
			Organic Mulch	2.4.2	FIO													
			Mycorrhizal Fungi Inoculum	2.12	FIO													
			Pesticide	2.14	FIO													
			SD-10 Operation and Maintenance															
			Data															
			Maintenance Instructions	3.9.5	FIO													
		02975A	SD-03 Product Data															
			Installation of Sealant	3.3	G PO													
		03150A	SD-03 Product Data															
			Preformed Expansion Joint Filler	2.2	FIO													
			Preformed Expansion Joint Filler	2.2	FIO													
			Sealant	2.3	FIO													
			Sealant	2.3	FIO													
			SD-07 Certificates															

SUBMITTAL REGISTER

CONTRACT NO.

TITLE AND LOCATION
FY04 DORMITORIES, SEYMOUR JOHNSON AFB, NC

CONTRACTOR

ACTIVITY NO	TRANSMITTAL NO	SPEC SECT	DESCRIPTION ITEM SUBMITTED	PARAGRAPH #	CLASSIFICATION	GOVT OR A/E REVWR	CONTRACTOR: SCHEDULE DATES			CONTRACTOR ACTION			APPROVING AUTHORITY					MAILED TO CONTR/ DATE RCD FRM APPR AUTH	REMARKS
							SUBMIT	APPROVAL NEEDED BY	MATERIAL NEEDED BY	ACTION CODE	DATE OF ACTION	DATE FWD TO APPR AUTH/ DATE RCD FROM CONTR	DATE FWD TO OTHER REVIEWER	DATE RCD FROM OTH REVIEWER	ACTION CODE	DATE OF ACTION		
(a)	(b)	(c)	(d)	(e)	(f)		(g)	(h)	(i)	(j)	(k)	(l)	(m)	(n)	(o)	(p)	(q)	(r)
		03150A	Preformed Expansion Joint Filler	2.2	FIO													
			Sealant	2.3	FIO													
		03200A	SD-02 Shop Drawings															
			Reinforcement	3.1	G AE													
		03300	SD-03 Product Data															
			Mixture Proportions	1.9	G AE													
			SD-06 Test Reports															
			Testing and Inspection for	3.17	FIO													
			Contractor Quality Control															
			SD-07 Certificates															
			Qualifications	1.5	FIO													
		03415	SD-02 Shop Drawings															
			Fabrication Drawings		G AE													
			Erection Plan		G AE													
			SD-03 Product Data															
			Confirmation of Design	1.4.1.3	G AE													
			Construction Records		FIO													
			SD-04 Samples															
			Precast Panel		FIO													
			Site Mock-up	1.5	FIO													
		04200	SD-02 Shop Drawings															
			Masonry Work		FIO													
			SD-03 Product Data															
			Clay or Shale Brick	2.2	FIO													
			Flashing	2.17	FIO													
			Cold Weather Installation	3.1.2	FIO													

SUBMITTAL REGISTER

CONTRACT NO.

TITLE AND LOCATION
FY04 DORMITORIES, SEYMOUR JOHNSON AFB, NC

CONTRACTOR

ACTIVITY NO	TRANSMITTAL NO	SPEC SECT	DESCRIPTION ITEM SUBMITTED	PARAGRAPH #	CLASSIFICATION	GOVT OR A/E REVWR	CONTRACTOR: SCHEDULE DATES			CONTRACTOR ACTION			APPROVING AUTHORITY					MAILED TO CONTR/ DATE RCD FRM APPR AUTH	REMARKS
							SUBMIT	APPROVAL NEEDED BY	MATERIAL NEEDED BY	ACTION CODE	DATE OF ACTION	DATE FWD TO APPR AUTH/ DATE RCD FROM CONTR	DATE FWD TO OTHER REVIEWER	DATE RCD FROM OTH REVIEWER	ACTION CODE	DATE OF ACTION		
(a)	(b)	(c)	(d)	(e)	(f)		(g)	(h)	(i)	(j)	(k)	(l)	(m)	(n)	(o)	(p)	(q)	(r)
		04200	SD-04 Samples															
			Clay or Shale Brick	2.2	G ED													
			Portable Panel		G RE													
			SD-06 Test Reports															
			Efflorescence Test	3.23.3	FIO													
			Field Testing of Mortar	3.26.1	FIO													
			Field Testing of Grout	3.23.2	FIO													
			SD-07 Certificates															
			Clay or Shale Brick	2.2	FIO													
			Concrete Masonry Units (CMU)	2.4	FIO													
			Anchors, Ties, and Bar	2.11	FIO													
			Positioners															
			Expansion-Joint Materials	2.16	FIO													
			Joint Reinforcement	2.12	FIO													
			Reinforcing Steel Bars and Rods	2.13	FIO													
			Masonry Cement	2.8.4	FIO													
			Mortar Coloring	2.8.2	FIO													
			Precast Concrete Items	2.5	FIO													
			Admixtures for Masonry Mortar	2.8.1	FIO													
			Admixtures for Grout	2.10.1	FIO													
			SD-08 Manufacturer's Instructions															
			Masonry Cement	2.8.4	FIO													
		05120	SD-02 Shop Drawings															
			Erection drawings		G AE													
			Fabrication drawings	1.7.1	G AE													
			SD-03 Product Data															

SUBMITTAL REGISTER

CONTRACT NO.

TITLE AND LOCATION
FY04 DORMITORIES, SEYMOUR JOHNSON AFB, NC

CONTRACTOR

ACTIVITY NO	TRANSMITTAL NO	SPEC SECT	DESCRIPTION ITEM SUBMITTED	PARAGRAPH #	CLASSIFICATION	GOVT OR A/E REVWR	CONTRACTOR: SCHEDULE DATES			CONTRACTOR ACTION			APPROVING AUTHORITY					MAILED TO CONTR/ DATE RCD FRM APPR AUTH	REMARKS
							SUBMIT	APPROVAL NEEDED BY	MATERIAL NEEDED BY	ACTION CODE	DATE OF ACTION	DATE FWD TO APPR AUTH/ DATE RCD FROM CONTR	DATE FWD TO OTHER REVIEWER	DATE RCD FROM OTH REVIEWER	ACTION CODE	DATE OF ACTION		
(a)	(b)	(c)	(d)	(e)	(f)		(g)	(h)	(i)	(j)	(k)	(l)	(m)	(n)	(o)	(p)	(q)	(r)
		05120	Load indicator washers	2.2.5	FIO													
			Shop primer	2.4	FIO													
			SD-06 Test Reports															
			Class B coating	2.4	FIO													
			Bolts, nuts, and washers	2.2	FIO													
			SD-07 Certificates															
			Steel	2.1	FIO													
			Bolts, nuts, and washers	2.2	FIO													
			Shop primer	2.4	FIO													
			Welding electrodes and rods	2.3.1	FIO													
			Nonshrink grout	2.3.2	FIO													
			AISC Quality Certification	1.5	FIO													
			Welding procedures and	1.7.2.3	FIO													
			qualifications															
		05450	SD-02 Shop Drawings															
			Shop Drawings		G RE													
			SD-03 Product Data															
			Product Data		FIO													
			SD-06 Test Reports															
			Design Analysis		G AE													
			SD-07 Certificates															
			Certificate of Compliance		FIO													
		05500A	SD-02 Shop Drawings															
			Miscellaneous Metal Items	1.6	FIO													
		06100A	SD-07 Certificates															
			Grading and Marking	2.1.1	FIO													

SUBMITTAL REGISTER

CONTRACT NO.

TITLE AND LOCATION
FY04 DORMITORIES, SEYMOUR JOHNSON AFB, NC

CONTRACTOR

ACTIVITY NO	TRANSMITTAL NO	SPEC SECT	DESCRIPTION ITEM SUBMITTED	PARAGRAPH #	CLASSIFICATION	GOVT OR A/E REVWR	CONTRACTOR: SCHEDULE DATES			CONTRACTOR ACTION			APPROVING AUTHORITY					
							SUBMIT	APPROVAL NEEDED BY	MATERIAL NEEDED BY	ACTION CODE	DATE OF ACTION	DATE FWD TO APPR AUTH/ DATE RCD FROM CONTR	DATE FWD TO OTHER REVIEWER	DATE RCD FROM OTH REVIEWER	ACTION CODE	DATE OF ACTION	MAILED TO CONTR/ DATE RCD FRM APPR AUTH	REMARKS
(a)	(b)	(c)	(d)	(e)	(f)		(g)	(h)	(i)	(j)	(k)	(l)	(m)	(n)	(o)	(p)	(q)	(r)
		06100A	Insulation	2.3	FIO													
		06200A	SD-02 Shop Drawings															
			Finish Carpentry		FIO													
			SD-03 Product Data															
			Wood Items, and Trim	2.1	FIO													
			SD-04 Samples															
			Moldings	2.1.10	FIO													
			Fascias and Trim	2.1.9	FIO													
		07240	SD-02 Shop Drawings															
			Shop drawings		G													
			SD-03 Product Data															
			Base coat	2.7	FIO													
			Portland cement	2.8	FIO													
			Reinforcing fabric	2.9	FIO													
			Finish coat	2.11	FIO													
			Joint Sealant	2.14	FIO													
			Warranty	1.7	FIO													
			SD-04 Samples															
			Sample Boards		G													
			SD-06 Test Reports															
			Abrasion resistance	1.2.3.1	FIO													
			Accelerated weathering	1.2.3.2	FIO													
			Mildew resistance	1.2.3.3	FIO													
			Salt spray resistance	1.2.3.4	FIO													
			Absorption-freeze-thaw	1.2.3.6	FIO													
			SD-07 Certificates															

SUBMITTAL REGISTER

CONTRACT NO.

TITLE AND LOCATION
FY04 DORMITORIES, SEYMOUR JOHNSON AFB, NC

CONTRACTOR

ACTIVITY NO	TRANSMITTAL NO	SPEC SECT	DESCRIPTION ITEM SUBMITTED	PARAGRAPH #	CLASSIFICATION	GOVT OR A/E REVWR	CONTRACTOR: SCHEDULE DATES			CONTRACTOR ACTION			APPROVING AUTHORITY					REMARKS
							SUBMIT	APPROVAL NEEDED BY	MATERIAL NEEDED BY	ACTION CODE	DATE OF ACTION	DATE FWD TO APPR AUTH/ DATE RCD FROM CONTR	DATE FWD TO OTHER REVIEWER	DATE RCD FROM OTH REVIEWER	ACTION CODE	DATE OF ACTION	MAILED TO CONTR/ DATE RCD FRM APPR AUTH	
(a)	(b)	(c)	(d)	(e)	(f)		(g)	(h)	(i)	(j)	(k)	(l)	(m)	(n)	(o)	(p)	(q)	(r)
		07240	Qualifications of EFS	1.4.1	FIO													
			Manufacturer															
			Qualification of EFS Installer	1.4.2	FIO													
			Qualification of Sealant Applicator	1.4.3	FIO													
			Qualifications of Third Party		FIO													
			Inspector															
			Inspection Check List	3.5.2	G													
			SD-08 Manufacturer’s Instructions															
			Installation	3.3	FIO													
			SD-10 Operation and Maintenance															
			Data															
			EFS	1.7	FIO													
		07311	SD-03 Product Data															
			Shingles	2.1.1	FIO													
			SD-08 Manufacturer’s Instructions															
			Application	3.3	FIO													
		07416A	SD-02 Shop Drawings															
			Structural Standing Seam Metal		G AE													
			Roof System															
			SD-03 Product Data															
			Design Analysis		G AE													
			Qualifications		FIO													
			SD-04 Samples															
			Accessories	2.3	FIO													
			Roof,Fascia and Soffit Panels	2.1	FIO													
			Factory Color Finish	2.6	FIO													

SUBMITTAL REGISTER

CONTRACT NO.

TITLE AND LOCATION
FY04 DORMITORIES, SEYMOUR JOHNSON AFB, NC

CONTRACTOR

ACTIVITY NO	TRANSMITTAL NO	SPEC SECT	DESCRIPTION ITEM SUBMITTED	PARAGRAPH #	CLASSIFICATION	GOVT OR A/E REVWR	CONTRACTOR: SCHEDULE DATES			CONTRACTOR ACTION			APPROVING AUTHORITY					MAILED TO CONTR/ DATE RCD FRM APPR AUTH	REMARKS
							SUBMIT	APPROVAL NEEDED BY	MATERIAL NEEDED BY	ACTION CODE	DATE OF ACTION	DATE FWD TO APPR AUTH/ DATE RCD FROM CONTR	DATE FWD TO OTHER REVIEWER	DATE RCD FROM OTH REVIEWER	ACTION CODE	DATE OF ACTION		
(a)	(b)	(c)	(d)	(e)	(f)		(g)	(h)	(i)	(j)	(k)	(l)	(m)	(n)	(o)	(p)	(q)	(r)
		07416A	SD-06 Test Reports															
			Test Report for Uplift Resistance		G AE													
			of the SSSMR															
			SD-07 Certificates															
			Structural Standing Seam Metal		FIO													
			Roof System															
		07600	SD-02 Shop Drawings															
			Gutters	3.1.17	FIO													
			Downspouts	3.1.18	FIO													
			Expansion joints	3.1.26	FIO													
			Flashing at roof penetrations	3.1.27	FIO													
			Drip edge	3.1.16	FIO													
			Eave flashing		FIO													
			SD-11 Closeout Submittals															
			Quality Control Plan	3.5	FIO													
		07840A	SD-02 Shop Drawings															
			Firestopping Materials	2.1	FIO													
			SD-07 Certificates															
			Firestopping Materials	2.1	FIO													
			Installer Qualifications	1.5	FIO													
			Inspection	3.3	G RE													
		07900A	SD-03 Product Data															
			Backing	2.1	FIO													
			Bond-Breaker	2.2	FIO													
			Sealant	2.5	FIO													
			SD-07 Certificates															

SUBMITTAL REGISTER

CONTRACT NO.

TITLE AND LOCATION
FY04 DORMITORIES, SEYMOUR JOHNSON AFB, NC

CONTRACTOR

ACTIVITY NO	TRANSMITTAL NO	SPEC SECT	DESCRIPTION ITEM SUBMITTED	PARAGRAPH #	CLASSIFICATION	GOVT OR A/E REVWR	CONTRACTOR: SCHEDULE DATES			CONTRACTOR ACTION			APPROVING AUTHORITY					MAILED TO CONTR/ DATE RCD FRM APPR AUTH	REMARKS
							SUBMIT	APPROVAL NEEDED BY	MATERIAL NEEDED BY	ACTION CODE	DATE OF ACTION	DATE FWD TO APPR AUTH/ DATE RCD FROM CONTR	DATE FWD TO OTHER REVIEWER	DATE RCD FROM OTH REVIEWER	ACTION CODE	DATE OF ACTION		
(a)	(b)	(c)	(d)	(e)	(f)		(g)	(h)	(i)	(j)	(k)	(l)	(m)	(n)	(o)	(p)	(q)	(r)
		07900A	Sealant	2.5	FIO													
		08110	SD-02 Shop Drawings															
			Doors	2.1	FIO													
			Doors	2.1	FIO													
			Frames	2.7	FIO													
			Frames	2.7	FIO													
			SD-03 Product Data															
			Doors	2.1	FIO													
			Frames	2.7	FIO													
		08120	SD-02 Shop Drawings															
			Aluminum frames	2.1	FIO													
			SD-08 Manufacturer's Instructions															
			Aluminum frames	2.1	FIO													
		08210	SD-02 Shop Drawings															
			Doors	2.1	FIO													
			SD-03 Product Data															
			Doors	2.1	FIO													
			Accessories		FIO													
			warranty	1.4	FIO													
			Fire resistance rating		FIO													
			SD-06 Test Reports															
			Split resistance	2.4	FIO													
			Cycle-slam	2.4	FIO													
			Hinge loading resistance	2.4	FIO													
		08520A	SD-02 Shop Drawings															
			Aluminum Windows		FIO													

SUBMITTAL REGISTER

CONTRACT NO.

TITLE AND LOCATION
FY04 DORMITORIES, SEYMOUR JOHNSON AFB, NC

CONTRACTOR

ACTIVITY NO	TRANSMITTAL NO	SPEC SECT	DESCRIPTION ITEM SUBMITTED	PARAGRAPH #	CLASSIFICATION	GOVT OR A/E REVWR	CONTRACTOR: SCHEDULE DATES			CONTRACTOR ACTION			APPROVING AUTHORITY					MAILED TO CONTR/ DATE RCD FRM APPR AUTH	REMARKS
							SUBMIT	APPROVAL NEEDED BY	MATERIAL NEEDED BY	ACTION CODE	DATE OF ACTION	DATE FWD TO APPR AUTH/ DATE RCD FROM CONTR	DATE FWD TO OTHER REVIEWER	DATE RCD FROM OTH REVIEWER	ACTION CODE	DATE OF ACTION		
(a)	(b)	(c)	(d)	(e)	(f)		(g)	(h)	(i)	(j)	(k)	(l)	(m)	(n)	(o)	(p)	(q)	(r)
		08520A	Insect Screens	2.3	FIO													
			SD-03 Product Data															
			Aluminum Windows		FIO													
			SD-06 Test Reports															
			Aluminum Windows		FIO													
			SD-07 Certificates															
			Aluminum Windows		FIO													
		08710	SD-02 Shop Drawings															
			Hardware schedule	1.3	FIO													
			Keying system	2.3.8	G RE													
			SD-03 Product Data															
			Hardware items	2.3	FIO													
			SD-08 Manufacturer's Instructions															
			Installation	3.1	FIO													
			SD-10 Operation and Maintenance															
			Data															
			Hardware Schedule	1.3	FIO													
			SD-11 Closeout Submittals															
			Key bitting	1.4	FIO													
		08810A	SD-03 Product Data															
			Insulating Glass	2.3	FIO													
			Glazing Accessories	2.11	FIO													
			SD-04 Samples															
			Insulating Glass	2.3	FIO													
			SD-07 Certificates															
			Insulating Glass	2.3	FIO													

SUBMITTAL REGISTER

CONTRACT NO.

TITLE AND LOCATION
FY04 DORMITORIES, SEYMOUR JOHNSON AFB, NC

CONTRACTOR

ACTIVITY NO	TRANSMITTAL NO	SPEC SECT	DESCRIPTION ITEM SUBMITTED	PARAGRAPH #	CLASSIFICATION	GOVT OR A/E REVWR	CONTRACTOR: SCHEDULE DATES			CONTRACTOR ACTION			APPROVING AUTHORITY					MAILED TO CONTR/ DATE RCD FRM APPR AUTH	REMARKS
							SUBMIT	APPROVAL NEEDED BY	MATERIAL NEEDED BY	ACTION CODE	DATE OF ACTION	DATE FWD TO APPR AUTH/ DATE RCD FROM CONTR	DATE FWD TO OTHER REVIEWER	DATE RCD FROM OTH REVIEWER	ACTION CODE	DATE OF ACTION		
(a)	(b)	(c)	(d)	(e)	(f)		(g)	(h)	(i)	(j)	(k)	(l)	(m)	(n)	(o)	(p)	(q)	(r)
		09100N	SD-02 Shop Drawings															
			Metal support systems	2.1	FIO													
		09250	SD-03 Product Data															
			Water-Resistant Gypsum Backing	2.1.3	FIO													
			Board															
			Exterior Gypsum Soffit Board	2.4.7	FIO													
			Accessories	2.1.14	FIO													
			SD-07 Certificates															
			Asbestos Free Materials	2.1	G													
		09310	SD-03 Product Data															
			Tile	2.1	FIO													
			Setting-Bed	2.2	FIO													
			Mortar, Grout, and Adhesive	2.4	FIO													
			SD-04 Samples															
			Tile	2.1	FIO													
			Accessories		FIO													
			Marble Thresholds	2.5	FIO													
			SD-07 Certificates															
			Tile	2.1	FIO													
			Mortar, Grout, and Adhesive	2.4	FIO													
		09510	SD-03 Product Data															
			Acoustical Ceiling Systems		FIO													
			SD-07 Certificates															
			Acoustical Units	2.1	FIO													
		09680A	SD-02 Shop Drawings															
			Installation		FIO													

SUBMITTAL REGISTER

CONTRACT NO.

TITLE AND LOCATION
FY04 DORMITORIES, SEYMOUR JOHNSON AFB, NC

CONTRACTOR

ACTIVITY NO	TRANSMITTAL NO	SPEC SECT	DESCRIPTION ITEM SUBMITTED	PARAGRAPH #	CLASSIFICATION	GOVT OR A/E REVWR	CONTRACTOR: SCHEDULE DATES			CONTRACTOR ACTION			APPROVING AUTHORITY					MAILED TO CONTR/ DATE RCD FRM APPR AUTH	REMARKS
							SUBMIT	APPROVAL NEEDED BY	MATERIAL NEEDED BY	ACTION CODE	DATE OF ACTION	DATE FWD TO APPR AUTH/ DATE RCD FROM CONTR	DATE FWD TO OTHER REVIEWER	DATE RCD FROM OTH REVIEWER	ACTION CODE	DATE OF ACTION		
(a)	(b)	(c)	(d)	(e)	(f)		(g)	(h)	(i)	(j)	(k)	(l)	(m)	(n)	(o)	(p)	(q)	(r)
		09680A	SD-03 Product Data															
			Carpet		FIO													
			Surface Preparation	3.1	FIO													
			Installation		FIO													
			Regulatory Requirements	1.3	FIO													
			Adhesives and concrete primer	2.2	FIO													
			SD-04 Samples															
			Carpet		FIO													
			Molding	2.4	FIO													
			Wall Base		FIO													
			SD-06 Test Reports															
			Moisture and Alkalinity Tests	3.2	FIO													
			SD-07 Certificates															
			Carpet		FIO													
			Regulatory Requirements	1.3	FIO													
			SD-10 Operation and Maintenance															
			Data															
			Carpet		FIO													
			Cleaning and Protection	3.5	FIO													
		09900	SD-02 Shop Drawings															
			Piping identification	3.12	FIO													
			stencil	3.12	FIO													
			SD-03 Product Data															
			Coating	2.1	FIO													
			Manufacturer's Technical Data	2.1	FIO													
			Sheets															

SUBMITTAL REGISTER

CONTRACT NO.

TITLE AND LOCATION
FY04 DORMITORIES, SEYMOUR JOHNSON AFB, NC

CONTRACTOR

ACTIVITY NO	TRANSMITTAL NO	SPEC SECT	DESCRIPTION ITEM SUBMITTED	PARAGRAPH #	CLASSIFICATION	GOVT OR A/E REVWR	CONTRACTOR: SCHEDULE DATES			CONTRACTOR ACTION			APPROVING AUTHORITY					MAILED TO CONTR/ DATE RCD FRM APPR AUTH	REMARKS
							SUBMIT	APPROVAL NEEDED BY	MATERIAL NEEDED BY	ACTION CODE	DATE OF ACTION	DATE FWD TO APPR AUTH/ DATE RCD FROM CONTR	DATE FWD TO OTHER REVIEWER	DATE RCD FROM OTH REVIEWER	ACTION CODE	DATE OF ACTION		
(a)	(b)	(c)	(d)	(e)	(f)		(g)	(h)	(i)	(j)	(k)	(l)	(m)	(n)	(o)	(p)	(q)	(r)
		09900	SD-04 Samples															
			Color	1.9	FIO													
			SD-07 Certificates															
			Applicator's qualifications	1.3	FIO													
			Qualification Testing	1.4.1.2	FIO													
			SD-08 Manufacturer’s Instructions															
			Application instructions		FIO													
			Mixing	3.8.2	FIO													
			Manufacturer's Material Safety	1.7.2	FIO													
			Data Sheets															
			SD-10 Operation and Maintenance															
			Data															
			Coatings:	2.1	FIO													
		10100A	SD-03 Product Data															
			Visual Display Boards		FIO													
			07 Certificates		FIO													
		10201N	SD-02 Shop Drawings															
			Wall and gable louvers	2.2	FIO													
			SD-04 Samples															
			Wall and gable louvers	2.2	FIO													
		10440	SD-02 Shop Drawings															
			Detail Drawings	3.1	FIO													
			SD-03 Product Data															
			Installation	3.1	FIO													
			SD-04 Samples															
			Interiorand Exterior Signage	1.3	FIO													

SUBMITTAL REGISTER

CONTRACT NO.

TITLE AND LOCATION
FY04 DORMITORIES, SEYMOUR JOHNSON AFB, NC

CONTRACTOR

ACTIVITY NO	TRANSMITTAL NO	SPEC SECT	DESCRIPTION ITEM SUBMITTED	PARAGRAPH #	CLASSIFICATION	GOVT OR A/E REVWR	CONTRACTOR: SCHEDULE DATES			CONTRACTOR ACTION		DATE FWD TO APPR AUTH/ DATE RCD FROM CONTR	APPROVING AUTHORITY				MAILED TO CONTR/ DATE RCD FRM APPR AUTH	REMARKS
							SUBMIT	APPROVAL NEEDED BY	MATERIAL NEEDED BY	ACTION CODE	DATE OF ACTION		DATE FWD TO OTHER REVIEWER	DATE RCD FROM OTH REVIEWER	ACTION CODE	DATE OF ACTION		
(a)	(b)	(c)	(d)	(e)	(f)		(g)	(h)	(i)	(j)	(k)	(l)	(m)	(n)	(o)	(p)	(q)	(r)
		10440	SD-10 Operation and Maintenance															
			Data															
			Protection and Cleaning	3.1.2	FIO													
		10550	SD-02 Shop Drawings															
			Shop Drawings		FIO													
			SD-03 Product Data															
			Manufacturer's Data		FIO													
		10800	SD-03 Product Data															
			Finishes	2.1.2	FIO													
			Accessory Items	2.2	FIO													
			SD-07 Certificates															
			Accessory Items	2.2	FIO													
		11401N	SD-03 Product Data															
			Kitchen equipment	2.1	FIO													
			SD-08 Manufacturer’s Instructions															
			Kitchen equipment	2.1	FIO													
			Exhaust hood		FIO													
			SD-10 Operation and Maintenance															
			Data															
			Kitchen equipment	2.1	G													
		12320A	SD-02 Shop Drawings															
			Installation	3.1	FIO													
			SD-03 Product Data															
			Cabinets	2.1	FIO													
			Countertops and Backsplash	2.2	FIO													
			SD-04 Samples															

SUBMITTAL REGISTER

CONTRACT NO.

TITLE AND LOCATION
FY04 DORMITORIES, SEYMOUR JOHNSON AFB, NC

CONTRACTOR

ACTIVITY NO	TRANSMITTAL NO	SPEC SECT	DESCRIPTION ITEM SUBMITTED	PARAGRAPH #	CLASSIFICATION	GOVT OR A/E REVWR	CONTRACTOR: SCHEDULE DATES			CONTRACTOR ACTION		DATE FWD TO APPR AUTH/ DATE RCD FROM CONTR	APPROVING AUTHORITY				MAILED TO CONTR/ DATE RCD FRM APPR AUTH	REMARKS
							SUBMIT	APPROVAL NEEDED BY	MATERIAL NEEDED BY	ACTION CODE	DATE OF ACTION		DATE FWD TO OTHER REVIEWER	DATE RCD FROM OTH REVIEWER	ACTION CODE	DATE OF ACTION		
(a)	(b)	(c)	(d)	(e)	(f)		(g)	(h)	(i)	(j)	(k)	(l)	(m)	(n)	(o)	(p)	(q)	(r)
		12320A	Cabinets	2.1	G	RE												
			Countertops and Backsplash	2.2	G	RE												
			SD-06 Test Reports															
			Cabinets and Countertops		FIO													
		12490A	SD-02 Shop Drawings															
			Approved Detail Drawings	3.2	FIO													
			SD-03 Product Data															
			Window Treatments	3.2	FIO													
			Hardware	1.3	FIO													
			SD-04 Samples															
			Window Treatments	3.2	FIO													
		13081	SD-02 Shop Drawings															
			Bracing	3.1	FIO													
			Resilient Vibration Isolation	3.4	FIO													
			Devices															
			Equipment Requirements	1.4	FIO													
			SD-03 Product Data															
			Bracing	3.1	G													
			Equipment Requirements	1.4	FIO													
		13280A	SD-03 Product Data															
			Respiratory Protection Program	1.12	G	SO												
			Cleanup and Disposal	3.11	G	SO												
			Detailed Drawings		G	SO												
			Materials and Equipment		G	SO												
			Qualifications	1.5	G	SO												
			Training Program	1.11	G	SO												

SUBMITTAL REGISTER

CONTRACT NO.

TITLE AND LOCATION
FY04 DORMITORIES, SEYMOUR JOHNSON AFB, NC

CONTRACTOR

ACTIVITY NO	TRANSMITTAL NO	SPEC SECT	DESCRIPTION ITEM SUBMITTED	PARAGRAPH #	CLASSIFICATION	GOVT OR A/E REVWR	CONTRACTOR: SCHEDULE DATES			CONTRACTOR ACTION			APPROVING AUTHORITY					MAILED TO CONTR/ DATE RCD FRM APPR AUTH	REMARKS
							SUBMIT	APPROVAL NEEDED BY	MATERIAL NEEDED BY	ACTION CODE	DATE OF ACTION	DATE FWD TO APPR AUTH/ DATE RCD FROM CONTR	DATE FWD TO OTHER REVIEWER	DATE RCD FROM OTH REVIEWER	ACTION CODE	DATE OF ACTION		
(a)	(b)	(c)	(d)	(e)	(f)		(g)	(h)	(i)	(j)	(k)	(l)	(m)	(n)	(o)	(p)	(q)	(r)
		13280A	Medical Requirements	1.10	G	SO												
			Encapsulants	2.1	G	SO												
			SD-06 Test Reports															
			Exposure Assessment and Air	3.9	G	SO												
			Monitoring															
			Local Exhaust Ventilation	1.20	G	SO												
			Licenses, Permits and	1.14	G	SO												
			Notifications															
			SD-07 Certificates															
			Vacuum, Filtration and Ventilation		FIO													
			Equipment															
			SO		FIO													
		13851A	SD-02 Shop Drawings															
			Fire Alarm Reporting System	1.4.1	G	RE												
			SD-03 Product Data															
			Storage Batteries	2.2	G	RE												
			Voltage Drop		G	RE												
			Special Tools and Spare Parts	2.7.4	G	RE												
			Training	3.6	G	RE												
			Testing	3.5	G	RE												
			SD-06 Test Reports															
			Testing	3.5	G	RE												
			SD-07 Certificates															
			Equipment		FIO													
			Qualifications	1.3.7	FIO													

SUBMITTAL REGISTER

CONTRACT NO.

TITLE AND LOCATION
FY04 DORMITORIES, SEYMOUR JOHNSON AFB, NC

CONTRACTOR

ACTIVITY NO	TRANSMITTAL NO	SPEC SECT	DESCRIPTION ITEM SUBMITTED	PARAGRAPH #	CLASSIFICATION	GOVT OR A/E REVWR	CONTRACTOR: SCHEDULE DATES			CONTRACTOR ACTION			APPROVING AUTHORITY					MAILED TO CONTR/ DATE RCD FRM APPR AUTH	REMARKS
							SUBMIT	APPROVAL NEEDED BY	MATERIAL NEEDED BY	ACTION CODE	DATE OF ACTION	DATE FWD TO APPR AUTH/ DATE RCD FROM CONTR	DATE FWD TO OTHER REVIEWER	DATE RCD FROM OTH REVIEWER	ACTION CODE	DATE OF ACTION		
(a)	(b)	(c)	(d)	(e)	(f)		(g)	(h)	(i)	(j)	(k)	(l)	(m)	(n)	(o)	(p)	(q)	(r)
		13851A	SD-10 Operation and Maintenance															
			Data															
			Technical Data and Computer	1.4	G	RE												
			Software															
		13930A	SD-02 Shop Drawings															
			Sprinkler System Shop Drawings		G	AE												
			As-Built Shop Drawings		FIO													
			SD-03 Product Data															
			Fire Protection Related	3.1	FIO													
			Submittals.															
			Load Calculations for Sizing Sway		G	AE												
			Bracing															
			Components and Equipment Data		G	AE												
			Hydraulic Calculations	1.7	G	AE												
			Spare Parts		FIO													
			Preliminary Tests Procedures		G	FE												
			Final Acceptance Test		G	FE												
			Procedures															
			On-site Training Schedule		G	FE												
			Preliminary Tests	3.10	G	fe												
			Final Acceptance Test		G	FE												
			Fire Protection Specialist		G	FE												
			Qualifications															
			Sprinkler System Installer	1.9	G	FE												
			Qualifications															
			SD-06 Test Reports															

SUBMITTAL REGISTER

CONTRACT NO.

TITLE AND LOCATION
FY04 DORMITORIES, SEYMOUR JOHNSON AFB, NC

CONTRACTOR

ACTIVITY NO	TRANSMITTAL NO	SPEC SECT	DESCRIPTION ITEM SUBMITTED	PARAGRAPH #	CLASSIFICATION	GOVT OR A/E REVWR	CONTRACTOR: SCHEDULE DATES			CONTRACTOR ACTION			APPROVING AUTHORITY					MAILED TO CONTR/ DATE RCD FRM APPR AUTH	REMARKS
							SUBMIT	APPROVAL NEEDED BY	MATERIAL NEEDED BY	ACTION CODE	DATE OF ACTION	DATE FWD TO APPR AUTH/ DATE RCD FROM CONTR	DATE FWD TO OTHER REVIEWER	DATE RCD FROM OTH REVIEWER	ACTION CODE	DATE OF ACTION		
(a)	(b)	(c)	(d)	(e)	(f)		(g)	(h)	(i)	(j)	(k)	(l)	(m)	(n)	(o)	(p)	(q)	(r)
		13930A	Preliminary Tests Report		G	FE												
			Final Acceptance Test Report		G	FE												
			SD-07 Certificates															
			Fire Protection Specialist		G	FE												
			Inspection															
			SD-10 Operation and Maintenance															
			Data															
			Wet Pipe Sprinkler System		FIO													
		15080A	SD-03 Product Data															
			General Materials	2.1	FIO													
			SD-04 Samples															
			Thermal Insulation Materials		FIO													
		15181A	SD-02 Shop Drawings															
			Piping System	2.4	FIO													
			Chilled Water		FIO													
			SD-03 Product Data															
			Water Treatment Systems	2.12	FIO													
			Shot Feeder		FIO													
			Qualifications	1.3	FIO													
			Field Tests	3.3	FIO													
			Underground Chilled Water Piping		FIO													
			SD-06 Test Reports															
			Field Tests	3.3	FIO													
			One-Year Inspection		FIO													
			SD-07 Certificates															
			Service Organization	2.1	FIO													

SUBMITTAL REGISTER

CONTRACT NO.

TITLE AND LOCATION
FY04 DORMITORIES, SEYMOUR JOHNSON AFB, NC

CONTRACTOR

ACTIVITY NO	TRANSMITTAL NO	SPEC SECT	DESCRIPTION ITEM SUBMITTED	PARAGRAPH #	CLASSIFICATION	GOVT OR A/E REVWR	CONTRACTOR: SCHEDULE DATES			CONTRACTOR ACTION			APPROVING AUTHORITY					MAILED TO CONTR/ DATE RCD FRM APPR AUTH	REMARKS
							SUBMIT	APPROVAL NEEDED BY	MATERIAL NEEDED BY	ACTION CODE	DATE OF ACTION	DATE FWD TO APPR AUTH/ DATE RCD FROM CONTR	DATE FWD TO OTHER REVIEWER	DATE RCD FROM OTH REVIEWER	ACTION CODE	DATE OF ACTION		
(a)	(b)	(c)	(d)	(e)	(f)		(g)	(h)	(i)	(j)	(k)	(l)	(m)	(n)	(o)	(p)	(q)	(r)
		15181A	SD-10 Operation and Maintenance															
			Data															
			Operation Manuals	3.4	FIO													
			Maintenance Manuals	3.4	FIO													
			Water Treatment Systems	2.12	FIO													
		15190A	SD-02 Shop Drawings															
			Gas Piping System	3.2	FIO													
			SD-03 Product Data															
			Welding	1.3.1	FIO													
		15400A	SD-02 Shop Drawings															
			Plumbing System	3.9.1	FIO													
			Electrical Work	1.4	FIO													
			SD-03 Product Data															
			Plumbing Fixture Schedule	3.10	FIO													
			Plumbing System	3.9.1	FIO													
			SD-06 Test Reports															
			Tests, Flushing and Disinfection	3.9	FIO													
			Test of Backflow Prevention	3.9.1.1	FIO													
			Assemblies															
			SD-07 Certificates															
			Materials and Equipment	1.3	FIO													
			SD-10 Operation and Maintenance															
			Data															
			Plumbing System	3.9.1	FIO													
		15500A	SD-02 Shop Drawings															
			Drawings	1.6.2	G AE													

SUBMITTAL REGISTER

CONTRACT NO.

TITLE AND LOCATION
FY04 DORMITORIES, SEYMOUR JOHNSON AFB, NC

CONTRACTOR

ACTIVITY NO	TRANSMITTAL NO	SPEC SECT	DESCRIPTION ITEM SUBMITTED	PARAGRAPH #	CLASSIFICATION	GOVT OR A/E REVWR	CONTRACTOR: SCHEDULE DATES			CONTRACTOR ACTION			APPROVING AUTHORITY					MAILED TO CONTR/ DATE RCD FRM APPR AUTH	REMARKS
							SUBMIT	APPROVAL NEEDED BY	MATERIAL NEEDED BY	ACTION CODE	DATE OF ACTION	DATE FWD TO APPR AUTH/ DATE RCD FROM CONTR	DATE FWD TO OTHER REVIEWER	DATE RCD FROM OTH REVIEWER	ACTION CODE	DATE OF ACTION		
(a)	(b)	(c)	(d)	(e)	(f)		(g)	(h)	(i)	(j)	(k)	(l)	(m)	(n)	(o)	(p)	(q)	(r)
		15500A	SD-03 Product Data															
			Verification of Dimensions	1.6.1	FIO													
			Desiccant Cooling System		G	AE												
			Spare Parts		FIO													
			Field Instructions	3.8	FIO													
			Performance Tests	3.3	FIO													
			Demonstrations	3.8	FIO													
			SD-06 Test Reports															
			Performance Tests	3.3	G	RE												
			Inspections		FIO													
			SD-10 Operation and Maintenance															
			Data															
			Operation and Maintenance	3.8	G	RE												
			Manuals															
		15514N	SD-02 Shop Drawings															
			Fuel train	1.4.1	G	RE												
			Wiring diagram	1.4.1	G	RE												
			SD-03 Product Data															
			Boilers	2.2	FIO													
			Boiler trim and control equipment	2.4	FIO													
			Burners and control equipment	2.3	FIO													
			Stack, breeching, and supports	2.4.18	FIO													
			SD-06 Test Reports															
			Operational tests	3.4.1	G	RE												
			Water analysis	1.4.2	G	G												
			SD-07 Certificates															

SUBMITTAL REGISTER

CONTRACT NO.

TITLE AND LOCATION
FY04 DORMITORIES, SEYMOUR JOHNSON AFB, NC

CONTRACTOR

ACTIVITY NO	TRANSMITTAL NO	SPEC SECT	DESCRIPTION ITEM SUBMITTED	PARAGRAPH #	CLASSIFICATION	GOVT OR A/E REVWR	CONTRACTOR: SCHEDULE DATES			CONTRACTOR ACTION			APPROVING AUTHORITY					MAILED TO CONTR/ DATE RCD FRM APPR AUTH	REMARKS
							SUBMIT	APPROVAL NEEDED BY	MATERIAL NEEDED BY	ACTION CODE	DATE OF ACTION	DATE FWD TO APPR AUTH/ DATE RCD FROM CONTR	DATE FWD TO OTHER REVIEWER	DATE RCD FROM OTH REVIEWER	ACTION CODE	DATE OF ACTION		
(a)	(b)	(c)	(d)	(e)	(f)		(g)	(h)	(i)	(j)	(k)	(l)	(m)	(n)	(o)	(p)	(q)	(r)
		15514N	Boilers	2.2	G	RE												
			Burners and control equipment	2.3	G	G												
			Burners and control equipment	2.3	G	G												
			Boiler trim and control equipment	2.4	FIO													
			Year 2000 (Y2K) Compliance	1.7.1	FIO													
			Warranty															
			SD-08 Manufacturer’s Instructions															
			Boilers	2.2	FIO													
			Feedwater treatment feeder	2.4.7	FIO													
			SD-10 Operation and Maintenance															
			Data															
			Boilers	2.2	G	RE												
			SD-11 Closeout Submittals															
			boilers	2.2	FIO													
		15620A	SD-02 Shop Drawings															
			Drawings		FIO													
			Installation	3.1	FIO													
			SD-03 Product Data															
			Refrigeration System	3.1.1	FIO													
			Spare Parts		FIO													
			Posted Instructions	3.5	FIO													
			Verification of Dimensions	1.5.1	FIO													
			Manufacturer's Multi-Year	1.6	FIO													
			Compressor Warranty															
			Factory Tests		FIO													
			Demonstrations	3.5	FIO													

SUBMITTAL REGISTER

CONTRACT NO.

TITLE AND LOCATION
FY04 DORMITORIES, SEYMOUR JOHNSON AFB, NC

CONTRACTOR

ACTIVITY NO	TRANSMITTAL NO	SPEC SECT	DESCRIPTION ITEM SUBMITTED	PARAGRAPH #	CLASSIFICATION	GOVT OR A/E REVWR	CONTRACTOR: SCHEDULE DATES			CONTRACTOR ACTION			APPROVING AUTHORITY					MAILED TO CONTR/ DATE RCD FRM APPR AUTH	REMARKS
							SUBMIT	APPROVAL NEEDED BY	MATERIAL NEEDED BY	ACTION CODE	DATE OF ACTION	DATE FWD TO APPR AUTH/ DATE RCD FROM CONTR	DATE FWD TO OTHER REVIEWER	DATE RCD FROM OTH REVIEWER	ACTION CODE	DATE OF ACTION		
(a)	(b)	(c)	(d)	(e)	(f)		(g)	(h)	(i)	(j)	(k)	(l)	(m)	(n)	(o)	(p)	(q)	(r)
		15620A	SD-06 Test Reports															
			System Performance Tests	3.1.1.2	FIO													
			System Performance Tests	3.4	FIO													
			SD-07 Certificates															
			Refrigeration System	3.1.1	FIO													
			Service Organization	2.1	FIO													
			SD-10 Operation and Maintenance															
			Data															
			Operation Manuals		FIO													
			Maintenance Manuals	3.5	FIO													
		15895	SD-02 Shop Drawings															
			Drawings	3.1.9	FIO													
			Installation	3.1	FIO													
			SD-03 Product Data															
			Components and Equipment	2.1	FIO													
			Test Procedures	2.11.1	FIO													
			Welding Procedures		FIO													
			Diagrams	3.1	G AE													
			Manufacturer's Experience	2.1	FIO													
			Welded Joints		FIO													
			Performance Tests	3.7	FIO													
			Field Training	3.9	FIO													
			SD-04 Samples															
			Components and Equipment	2.1	G RE													
			SD-06 Test Reports															
			Performance Tests	3.7	FIO													

SUBMITTAL REGISTER

CONTRACT NO.

TITLE AND LOCATION
FY04 DORMITORIES, SEYMOUR JOHNSON AFB, NC

CONTRACTOR

ACTIVITY NO	TRANSMITTAL NO	SPEC SECT	DESCRIPTION ITEM SUBMITTED	PARAGRAPH #	CLASSIFICATION	GOVT OR A/E REVWR	CONTRACTOR: SCHEDULE DATES			CONTRACTOR ACTION		DATE FWD TO APPR AUTH/ DATE RCD FROM CONTR	APPROVING AUTHORITY				MAILED TO CONTR/ DATE RCD FRM APPR AUTH	REMARKS
							SUBMIT	APPROVAL NEEDED BY	MATERIAL NEEDED BY	ACTION CODE	DATE OF ACTION		DATE FWD TO OTHER REVIEWER	DATE RCD FROM OTH REVIEWER	ACTION CODE	DATE OF ACTION		
(a)	(b)	(c)	(d)	(e)	(f)		(g)	(h)	(i)	(j)	(k)	(l)	(m)	(n)	(o)	(p)	(q)	(r)
		15895	Testing, Adjusting, and Balancing	3.6	FIO													
			SD-10 Operation and Maintenance															
			Data															
			Operating and Maintenance	3.9	FIO													
			Instructions															
		15951A	SD-02 Shop Drawings															
			HVAC Control System	3.1.1	G	RE												
			SD-03 Product Data															
			Service Organizations		G	RE												
			Equipment Compliance Booklet	1.6	G	RE												
			Commissioning Procedures	3.4	G	RE												
			Performance Verification Test	1.6	G	RE												
			Procedures															
			Training	3.6	FIO													
			SD-06 Test Reports															
			Commissioning Report	3.6.2	FIO													
			Performance Verification Test	3.5.3	FIO													
			SD-10 Operation and Maintenance															
			Data															
			Operation Manual	1.5	G	RE												
			Maintenance and Repair Manual	1.6	G	RE												
		15990A	SD-02 Shop Drawings															
			TAB Schematic Drawings and	3.3	G	RE												
			Report Forms															
			SD-03 Product Data															
			TAB Related HVAC Submittals	3.2	FIO													

SUBMITTAL REGISTER

CONTRACT NO.

TITLE AND LOCATION
FY04 DORMITORIES, SEYMOUR JOHNSON AFB, NC

CONTRACTOR

ACTIVITY NO	TRANSMITTAL NO	SPEC SECT	DESCRIPTION ITEM SUBMITTED	PARAGRAPH #	CLASSIFICATION	GOVT OR A/E REVWR	CONTRACTOR: SCHEDULE DATES			CONTRACTOR ACTION			APPROVING AUTHORITY					MAILED TO CONTR/ DATE RCD FRM APPR AUTH	REMARKS
							SUBMIT	APPROVAL NEEDED BY	MATERIAL NEEDED BY	ACTION CODE	DATE OF ACTION	DATE FWD TO APPR AUTH/ DATE RCD FROM CONTR	DATE FWD TO OTHER REVIEWER	DATE RCD FROM OTH REVIEWER	ACTION CODE	DATE OF ACTION		
(a)	(b)	(c)	(d)	(e)	(f)		(g)	(h)	(i)	(j)	(k)	(l)	(m)	(n)	(o)	(p)	(q)	(r)
		15990A	TAB Procedures	3.5.1	G	RE												
			Calibration	1.4	FIO													
			Systems Readiness Check	3.5.2	FIO													
			TAB Execution	3.5.1	G	RE												
			TAB Verification	3.5.4	G	RE												
			SD-06 Test Reports															
			Design Review Report	3.1	G	RE												
			Systems Readiness Check	3.5.2	G	RE												
			TAB Report	3.5.3	G	RE												
			TAB Verification Report	3.5.4	G	RE												
			SD-07 Certificates															
			Ductwork Leak Testing	3.4	FIO													
			TAB Firm	1.5.1	G	RE												
			TAB Specialist	1.5.2	G	RE												
		15995A	SD-03 Product Data															
			Commissioning Team	3.1	G	RO												
			Test Procedures		G	RO												
			Test Schedule		G	RO												
			SD-06 Test Reports															
			Test Reports		G	AE												
		16375A	SD-02 Shop Drawings															
			Electrical Distribution System	3.11.3	G	RE												
			As-Built Drawings		G	RE												
			SD-03 Product Data															
			Fault Current Analysis		FIO													
			Protective Device		FIO													

SUBMITTAL REGISTER

CONTRACT NO.

TITLE AND LOCATION
FY04 DORMITORIES, SEYMOUR JOHNSON AFB, NC

CONTRACTOR

ACTIVITY NO	TRANSMITTAL NO	SPEC SECT	DESCRIPTION ITEM SUBMITTED	PARAGRAPH #	CLASSIFICATION	GOVT OR A/E REVWR	CONTRACTOR: SCHEDULE DATES			CONTRACTOR ACTION			APPROVING AUTHORITY					MAILED TO CONTR/ DATE RCD FRM APPR AUTH	REMARKS
							SUBMIT	APPROVAL NEEDED BY	MATERIAL NEEDED BY	ACTION CODE	DATE OF ACTION	DATE FWD TO APPR AUTH/ DATE RCD FROM CONTR	DATE FWD TO OTHER REVIEWER	DATE RCD FROM OTH REVIEWER	ACTION CODE	DATE OF ACTION		
(a)	(b)	(c)	(d)	(e)	(f)		(g)	(h)	(i)	(j)	(k)	(l)	(m)	(n)	(o)	(p)	(q)	(r)
		16375A	Coordination Study		FIO													
			Nameplates	2.2	FIO													
			Material and Equipment	2.1	FIO													
			General Installation Requirements	3.1	FIO													
			SD-06 Test Reports															
			Factory Tests	2.17	G RE													
			Field Testing	3.11	G RE													
			Operating Tests	3.11.13	G RE													
			Cable Installation	3.2.1.4	FIO													
			SD-07 Certificates															
			Material and Equipment	2.1	FIO													
			Cable Joints	3.3	FIO													
			Cable Installer Qualifications		G RE													
			SD-10 Operation and Maintenance															
			Data															
			Electrical Distribution System	3.11.3	FIO													
		16415A	SD-02 Shop Drawings															
			Interior Electrical Equipment		G RE													
			SD-03 Product Data															
			Fault Current and Protective		FIO													
			Device Coordination Study															
			Manufacturer's Catalog		FIO													
			FIO		FIO													
			Material, Equipment, and Fixture		FIO													
			Lists															
			Installation Procedures		FIO													

SUBMITTAL REGISTER

CONTRACT NO.

TITLE AND LOCATION
FY04 DORMITORIES, SEYMOUR JOHNSON AFB, NC

CONTRACTOR

ACTIVITY NO	TRANSMITTAL NO	SPEC SECT	DESCRIPTION ITEM SUBMITTED	PARAGRAPH #	CLASSIFICATION	GOVT OR A/E REVWR	CONTRACTOR: SCHEDULE DATES			CONTRACTOR ACTION			APPROVING AUTHORITY					MAILED TO CONTR/ DATE RCD FRM APPR AUTH	REMARKS
							SUBMIT	APPROVAL NEEDED BY	MATERIAL NEEDED BY	ACTION CODE	DATE OF ACTION	DATE FWD TO APPR AUTH/ DATE RCD FROM CONTR	DATE FWD TO OTHER REVIEWER	DATE RCD FROM OTH REVIEWER	ACTION CODE	DATE OF ACTION		
(a)	(b)	(c)	(d)	(e)	(f)		(g)	(h)	(i)	(j)	(k)	(l)	(m)	(n)	(o)	(p)	(q)	(r)
		16415A	As-Built Drawings	1.2.6	G	RE												
			Onsite Tests	3.24.2	G	RE												
			SD-06 Test Reports															
			Factory Test Reports		G	RE												
			Field Test Plan		G	RE												
			Field Test Reports	3.22	G	RE												
			SD-07 Certificates															
			Materials and Equipment	1.4	FIO													
		16528A	SD-02 Shop Drawings															
			Lighting System	1.3.1	FIO													
			FIO		FIO													
			Detail Drawings		FIO													
			As-Built Drawings	3.16.3	G	RE												
			SD-03 Product Data															
			Equipment and Materials		FIO													
			FIO		FIO													
			SD-06 Test Reports															
			Operating Test	3.16.2	G	RE												
			Ground Resistance	3.16.3	G	RE												
			Measurements															
			SD-10 Operation and Maintenance															
			Data															
			Lighting System	1.3.1	FIO													
		16710A	SD-02 Shop Drawings															
			Premises Distribution System	1.7	FIO													
			FIO		FIO													

SUBMITTAL REGISTER

CONTRACT NO.

TITLE AND LOCATION
FY04 DORMITORIES, SEYMOUR JOHNSON AFB, NC

CONTRACTOR

ACTIVITY NO	TRANSMITTAL NO	SPEC SECT	DESCRIPTION ITEM SUBMITTED	PARAGRAPH #	CLASSIFICATION	GOVT OR A/E REVWR	CONTRACTOR: SCHEDULE DATES			CONTRACTOR ACTION			APPROVING AUTHORITY					MAILED TO CONTR/ DATE RCD FRM APPR AUTH	REMARKS
							SUBMIT	APPROVAL NEEDED BY	MATERIAL NEEDED BY	ACTION CODE	DATE OF ACTION	DATE FWD TO APPR AUTH/ DATE RCD FROM CONTR	DATE FWD TO OTHER REVIEWER	DATE RCD FROM OTH REVIEWER	ACTION CODE	DATE OF ACTION		
(a)	(b)	(c)	(d)	(e)	(f)		(g)	(h)	(i)	(j)	(k)	(l)	(m)	(n)	(o)	(p)	(q)	(r)
		16710A	Installation	3.1	FIO													
			SD-03 Product Data															
			Record Keeping and	1.8	FIO													
			Documentation															
			Spare Parts	3.1.9	G RE													
			Manufacturer's Recommendations	3.1.2	FIO													
			Test Plan	3.6	G RE													
			Qualifications	1.5	G RE													
			SD-06 Test Reports															
			Test Reports	3.6	G RE													
			SD-07 Certificates															
			Premises Distribution System	1.7	FIO													
			Materials and Equipment	2.1	FIO													
			Installers	1.5.1	FIO													
		16815A	SD-02 Shop Drawings															
			Cable Television Premises		FIO													
			Distribution System															
			FIO		FIO													
			Installation	3.1	G RE													
			SD-03 Product Data															
			Manufacturer's Recommendations		FIO													
			Test Plan		G RE													
			Qualifications	1.5	G RE													
			SD-06 Test Reports															
			Testing	3.6	G RE													
			SD-07 Certificates															

SUBMITTAL REGISTER

CONTRACT NO.

TITLE AND LOCATION
FY04 DORMITORIES, SEYMOUR JOHNSON AFB, NC

CONTRACTOR

ACTIVITY NO	TRANSMITTAL NO	SPEC SECT	DESCRIPTION ITEM SUBMITTED	PARAGRAPH #	CLASSIFICATION	GOVT OR A/E REVWR	CONTRACTOR: SCHEDULE DATES			CONTRACTOR ACTION			APPROVING AUTHORITY					
							SUBMIT	APPROVAL NEEDED BY	MATERIAL NEEDED BY	ACTION CODE	DATE OF ACTION	DATE FWD TO APPR AUTH/ DATE RCD FROM CONTR	DATE FWD TO OTHER REVIEWER	DATE RCD FROM OTH REVIEWER	ACTION CODE	DATE OF ACTION	MAILED TO CONTR/ DATE RCD FRM APPR AUTH	REMARKS
(a)	(b)	(c)	(d)	(e)	(f)		(g)	(h)	(i)	(j)	(k)	(l)	(m)	(n)	(o)	(p)	(q)	(r)
		16815A	Materials and Equipment	2.1	FIO													
			SD-10 Operation and Maintenance															
			Data															
			Operation and Maintenance		FIO													
			Manuals															

SECTION TABLE OF CONTENTS

DIVISION 01 - GENERAL REQUIREMENTS

SECTION 01335

*1 SUSTAINABLE DESIGN AND DEVELOPMENT

06/03

PART 1 GENERAL

1.1 REFERENCES
1.2 DESCRIPTION
1.3 SUBMITTALS
1.4 DOCUMENTATION REQUIREMENTS
1.4.1 Omitted
1.4.2 LEED credit P01 Fundamental Building System Commissioning
1.4.3 LEED credit 2.1 Construction Waste Management
1.4.4 Omitted
1.4.5 LEED credit 4.1 Recycled Content
1.4.6 LEED credit 5.1 Local/Regional Materials
1.4.7 Omitted
1.4.8 Omitted
1.4.9 LEED credit 3.1 and 3.2 Construction IAQ Management Plan

PART 2 PRODUCTS (Not Used)

PART 3 EXECUTION (Not Uawd)

-- End of Section Table of Contents --

SAVH-01335 (June 2003)

SECTION 01335

*1 SUSTAINABLE DESIGN AND DEVELOPMENT

06/03

PART 1 GENERAL

1.1 REFERENCES

The publications listed below form a part of this specification to the extent referenced. The publications are referred to within the text by the basic designation only.

SHEET METAL & AIR CONDITIONING CONTRACTORS' NATIONAL ASSOCIATION (SMACNA)

SMACNA IAQ Guidelines	(1995) Indoor Air Quality (IAQ) Guidelines for Occupied Buildings During Construction

U.S. GREEN BUILDING COUNCIL (usgbc.org)

LEED GBRG	LEED Green Building Reference Guide, Version 2.

U.S. GOVERNMENT

ETL 1110-3-491	Sustainable Design for Military Facilities

1.2 DESCRIPTION

This project has been designed for, and shall be constructed for a sustainable rating of 28 points in accordance with LEED GBRG. LEED certification is not required. The goal for this project is to have this facility capable of being LEED certified once construction is completed, however, actual certification is not required. Table 01335-1 through Table 01335-6 identifies the LEED credit items that are designed into or otherwise required for this project. No variations or substitutions to the LEED credits identified for this contract shall be allowed without written consent from the Contracting Officer. Should there be a case where there is any problem meeting the full requirements of a LEED credit identified for this project in Table 01335-1 through Table 01335-6, the Contractor must bring this to the attention of the Contracting Officer immediately.

The Contractor shall provide and assemble under separate cover documentation verifying compliance with LEED requirements as listed in this specification and as otherwise identified within the Technical Specifications. Some LEED credits are inherent in the design provided and require no further submittal or documentation. However, the Contractor shall become familiar with these requirements and parameters important to their development so that no action contrary to the design intent is inadvertently taken during construction. Other LEED credits involve material selection and are generally identified within the Technical Specification with the notation "SDD", though not specifically identified

in all occurrences. The remaining LEED credits are dependent on construction practices, procurement data or cumulative calculations of components of materials throughout the project.

All LEED credits identified in Table 01335-1 through Table 01335-6 under the columns Material Selection "SDD" and Construction Related shall be documented by the Contractor. Table 01335-1 through Table 01335-6 provide a general summary of types of action/submittals required and provide specification references. Detailed documentation on submittal requirements are contained in the Technical Specifications and paragraph 1.4 below. Some of the LEED points may have common traits between items inherent in the design and those involving material selection or construction related items. In this case, the Contractor shall only document those items pertaining to material selection or construction related items.

In all cases where a material, product or execution requirement is identified as a sustainable feature ("SDD") elsewhere in the contract documents, additional data or certificates shall be submitted with the individual component or process validating the material or component to the respected LEED credit item. This additional data or certificates shall be separable from the other submitted data for inclusion into the LEED Documentation Notebooks.

1.3 SUBMITTALS

Government approval is required for submittals with a "G" designation; submittals not having a "G" designation are for information only or as otherwise designated. When used, a designation following the "G" designation identifies the office that will review the submittal for the Government. The following shall be submitted in accordance with Section 01330 SUBMITTAL PROCEDURES:

SD-01 Preconstruction Submittals

LEED Compliance Plan; G, RE;

A detailed plan identifying all construction practices, procurement data or cumulative calculations of components required for LEED credit that must be identified and tracked during the course of construction. Plan shall indicate the LEED credit being tracked or documented, individual components of the LEED credit related items, dates of submittal of individual components of the LEED credit related items, and proposed method of tracking in accordance with and LEED GBRG.

SD-05 Design Data

LEED Calculations

Calculations showing compliance with a required LEED credit where identified in Table 01335-1 through Table 01335-6 or within the LEED Compliance Plan. Calculations shall be current and available for review monthly. Final calculations should be included in the LEED Documentation Notebook under the appropriate tab.

SD-11 Closeout Submittals

LEED Documentation Notebook

The Contractor shall prepare two comprehensive notebooks documenting each LEED credit identified in Table 01335-1 through Table 01335-6 for material selection where "SDD" is indicated and final calculations, certifications for construction practices, procurement data or cumulative calculations of components of materials throughout the project, and other items as identified in the LEED Compliance Plan. Notebook must contain all required data to support full compliance with the indicated LEED credit. LEED credits that are indicated as inherent to the design will be document by the designer of record.

LEED Documentation Notebooks shall be formatted to match LEED numbering system and tabbed for each point. Notebooks shall be kept current on a weekly basis and at least one set shall be available on the jobsite at all times. If the Contractor fails to maintain the LEED Documentation Notebooks as specified herein, the Contracting Officer will retain from the monthly progress payment an amount representing the estimated cost of maintaining these Notebooks. This monthly deduction will continue until an agreement can be reached between the Contracting Officer and the Contractor regarding the accuracy and completeness of the Notebooks.

1.4 DOCUMENTATION REQUIREMENTS

LEED credits as identified in Table 01335-1 through Table 01335-6 shall be incorporated and documented as required by the Technical Specifications and in full compliance with LEED GBRG. LEED Credits not identified elsewhere in the Technical Specifications, or those requiring further instruction are listed below.

1.4.1 Omitted

1.4.2 LEED credit P01 Fundamental Building System Commissioning

Individual component commissioning requirements are specified in the Technical Specifications where required. The Contractor shall group all reports and results of commissioning into this requirement for Building Systems Commissioning. Refer to the LEED Reference Manual.

1.4.3 LEED credit 2.1 Construction Waste Management

Notwithstanding the requirements of Section 01572 CONSTRUCTION AND DEMOLITION WASTE MANAGEMENT, the Contractor shall include in his LEED Compliance Plan a waste management plan that complies with the requirements of LEED credit 2.1 to the point level listed in Table 01335-1 through Table 01335-6 for recycling and/or salvage of at least 50% (by weight) of construction, demolition and land clearing waste. The plan should include proposed worksheets for tracking the value used and record keeping requirements for documentation to validate the final value. Refer to LEED GBRG for definitions and requirements. For this point performance is measured for entire project (not split out by facility type).

1.4.4 Omitted

1.4.5 LEED credit 4.1 Recycled Content

Notwithstanding the requirements of Section 01670 RECYCLED/RECOVERED MATERIALS promoting the use of recycled or recovered materials, the Contractor shall include in his LEED Compliance Plan a method of tracking and recordkeeping (by dollar value) of building materials used in this project that contain in aggregate a minimum weighted average of 20% post-consumer recycled content material, or a minimum weighted average of 40% post-industrial recycled content material. The plan should include proposed worksheets similar to that shown as Attachment B for tracking the value used and record keeping requirements for documentation to validate the final value. Refer to LEED GBRG for definitions, exclusions and requirements.

1.4.6 LEED credit 5.1 Local/Regional Materials

The Contractor shall include in his LEED Compliance Plan a method of tracking and recordkeeping (by dollar value) of building products used in this project that are manufactured regionally within a radius of 500 miles. The plan should include proposed worksheets for tracking the value used and record keeping requirements for documentation to validate the final value. Refer to LEED GBRG for definitions, exclusions and requirements. Project goal is 20%.

1.4.7 Omitted
1.4.8 Omitted

1.4.9 LEED credit 3.1 and 3.2 Construction IAQ Management Plan

The Contractor shall include in his LEED Compliance Plan a Construction Indoor Air Quality (IAQ) Management Plan for the construction and pre-occupancy phases of the building that, during construction, meets or exceeds the minimum requirements of SMACNA IAQ Guidelines, AND protects stored on-site or installed absorptive materials from moisture damage, AND replaces all filtration media immediately prior to occupancy. Additionally, the plan shall provide for a minimum two-week building flushout period with new filtration media at 100% outside air after construction ends and prior to occupancy. Refer to ETL 1110-3-491 and LEED GBRG for definitions and requirements.

PART 2 PRODUCTS (Not Used)

PART 3 EXECUTION (Not Uawd)

-- End of Section --

Table 01335-1

LEED Credit Paragraph	LEED Summary Table	Maximum Points Available	Applicable to this Facility Type	Inherent in Design – Note 1	Material Selection 'SDD' – Note 2	Construction Related – Note 3	Specification or Drawing Reference	REMARKS
	ENERGY & ENVIRONMENTAL CATEGORIES							
	P = Prerequisite C = Credit							
	SUSTAINABLE SITES							
PO1	Erosion and Sedimentation Control: Control erosion to reduce negative impacts on water and air quality.	P	P	X				This project has been designed in accordance with manual for erosion and sedimentation control for North Carolina.
CO1	Site Selection: Avoid development of inappropriate sites, and reduce environmental impact.	1	1	X				Site meets criteria.
CO2	Urban Redevelopment: Channel development to urban areas with existing infrastructures.	1	0					
CO3	Brownfield Redevelopment: Rehabilitate damaged sites.	4	0					
CO4	Alternative Transportation: Reduce automobile pollution and land-development impact.	1-4	-					
CO4.1	Alternative Transportation—Level I: Locate building near public transportation.	1	0					
CO4.2	Alternative Transportation—Level II: Provide means for securing bicycles.	1	1	X			02870A	Bicycle racks provide for each dormitory. Each dormitory bedroom has a shower.
CO4.3	Alternative Transportation—Level III: Alternative-fuel refueling stations.	1	0					
CO4.4	Alternative Transportation—Level IV: Adjust parking lot size for local zoning requirements and carpools.	1	0					
CO5	Reduced Site Disturbance: Conserve natural areas, restore damaged ones.	1-2	-					
CO5.1	Reduced Site Disturbance--Level I: Limit building footprint on greenfield sites, and restore vegetation on previously developed sites.	1	0					
CO5.2	Reduced Site Disturbance--Level II: Increase open space to at least 25 percent more than local zoning ordinances require.	1	0					
CO6	Stormwater Management: Limit disruption of natural water flows.	1-2	-					
C06.1	Stormwater Management—Level I: No net increase in stormwater runoff, or 25 percent reduction if existing imperviousness exceeds 50 percent.	1	0					
CO6.2	Stormwater Management--Level II: Treatment systems.	1	0					
CO7	Landscaping and Exterior Design to Reduce Heat Islands: Reduce thermal gradient differences between developed and undeveloped areas.	1-2	-	X				
CO7.1	Landscaping…Reduce Heat Islands--Level I: Provide shade, reduce reflectivity, or reduce impervious service.	1	1	X			L-1	Site Landscaping Plans have been designed so that 30% of all non-roof impervious surfaces will be shaded within 5 years.
CO7.2	Landscaping…Reduce Heat Islands--Level II: Change roofing materials.	1	0					
CO8	Light Pollution Reduction: Reduce development impact on nocturnal environments.	1	1	X			E-11	Low cut-off type lighting has been specified to eliminate direct beam light leaving site area.
	SUBTOTAL SUSTAINABLE SITES:	14	4					

Table 01335-2

LEED Credit Paragraph	LEED Summary Table	Maximum Points Available	Applicable to this Facility Type	Inherent in Design – Note 1	Material Selection 'SDD' – Note 2	Construction Related – Note 3	Specification or Drawing Reference	REMARKS
	ENERGY & ENVIRONMENTAL CATEGORIES							
	P = Prerequisite C = Credit							
	WATER EFFICIENCY							
CO1	Water Efficient Landscaping: Limit or eliminate use of potable water for landscape irrigation.	1-2	-					
CO1.1	Water Efficient Landscaping--Level I: Use high-efficiency irrigation technology, captured rain, or recycled water by 50 percent over conventional means.	1	1					Level I is achieved by achieving Level II.
CO1.2	Water Efficient Landscaping--Level II: Achieve 100 percent reduction in potable water use for irrigation.	1	1	X				Irrigation system not provided.
CO2	Innovative Wastewater Technologies: Reduce potable water demand and wastewater production, increase local aquifer.	1	0					
CO3	Water Use Reduction: Maximize water efficiency.	1-2	-					
CO3.1	Water Use Reduction--Level I: Reduce water use, excluding irrigation, by 20 percent or more off of the baseline calculated for the building.	1	1				15400	Water flow restrictors increased from 2.5 GPM to 2.0 GPM to provide 20% reduction.
CO3.2	Water Use Reduction--Level II: Decrease potable water use by an additional 10 percent.	1	0					
	SUBTOTAL WATER EFFICIENCY:	5	3					

Table 01335-3

LEED Credit Paragraph	LEED Summary Table	Maximum Points Available	Applicable to this Facility Type	Inherent in Design – Note 1	Material Selection 'SDD' – Note 2	Construction Related – Note 3	Specification or Drawing Reference	REMARKS
	ENERGY & ENVIRONMENTAL CATEGORIES							
	P = Prerequisite C = Credit							
	ENERGY AND ATMOSPHERE							
PO1	Fundamental Building Systems Commissioning: Ensure that building systems operate as intended.	P	P				15995	Specification for building commissioning has been provided.
PO2	Minimum Energy Performance: Establish minimum energy-efficiency levels for base building and systems.	P	P	X			-	Energy design process for this facility follows ASHRAE / IESNA 90.1 – 1999
PO3	CFC Reduction in HVAC&/R Equipment: Reduce ozone depletion.	P	P				15620A M-9	Specifications don't permit CFC based refrigerants.
CO1	Optimize Energy Performance: Exceed Prerequisite standards for energy performance.	2-10	-					
CO1.1	Optimize Energy Performance--Level I: Reduce design energy cost, compared to energy cost budget, by 20 percent for new buildings or 10 percent for existing ones.	2	2	X			-	The buildings have been developed to provide a minimum 20% reduction in energy cost as compared to ASHRAE / IESNA 90.1 – 1999
CO1.2	Optimize Energy Performance--Level II: Reduce design energy cost, compared to energy cost budget, by 30 percent for new buildings or 20 percent for existing ones.	4	4	X			-	The buildings have been developed to provide a minimum 30% reduction in energy cost as compared to ASHRAE / IESNA 90.1 – 1999
CO1.3	Optimize Energy Performance--Level III: Reduce design energy cost, compared to energy cost budget, by 40 percent for new buildings or 30 percent for existing ones.	6	0					
CO1.4	Optimize Energy Performance--Level IV: Reduce design energy cost, compared to energy cost budget, by 50 percent for new buildings or 40 percent for existing ones.	8	0					
CO1.5	Optimize Energy Performance--Level V: Reduce design energy cost, compared to energy cost budget, by 60 percent for new buildings or 50 percent for existing ones.	10	0					
CO2	Renewable Energy: Encourage increasing levels of self-supply.	1-3	-					
CO2.1	Renewable Energy--Level I: Supply 5 percent of total energy use through on-site renewable systems.	1	0					
CO2.2	Renewable Energy--Level II: Supply 10 percent of total energy use through on-site renewable systems.	2	0					
CO2.3	Renewable Energy--Level III: Supply 20 percent of total energy use through on-site renewable systems.	3	0					
CO3	Additional Commissioning: Verify that building is designed and constructed to operate as intended.	1	0					
CO4	Ozone Depletion: Reduce ozone depletion.	1	1				15620A M-9	Project HVAC and Fire Suppression Systems don't contain HCFC's or Halons.
CO5	Measurement & Verification: Optimization of energy and water consumption.	1	0					
CO6	Green Power: Encourage use of renewable energy technologies.	1	0					
	SUBTOTAL ENERGY AND ATMOSPHERE:	17	7					

Table 01335-4

LEED Credit Paragraph	LEED Summary Table	Maximum Points Available	Applicable to this Facility Type	Inherent in Design – Note 1	Material Selection 'SDD' – Note 2	Construction Related – Note 3	Specification or Drawing Reference	REMARKS
	ENERGY & ENVIRONMENTAL CATEGORIES							
	P = Prerequisite C = Credit							
	MATERIALS AND RESOURCES							
PO1	Storage and Collection of Recyclables: Facilitate reduction in amount of waste destined for landfills.	P	P				A-26	An area has been dedicated for the separation, collection and storage of materials for recycling including paper, glass, plastic and metal.
CO1	Building Reuse: Conserve physical and cultural resources.	1-3	-					
CO1.1	Building Reuse--Level I: Maintain at least 75 percent of existing building structure and shell.	1	0					
CO1.2	Building Reuse--Level II: Maintain 100 percent of existing building structure and shell.	1	0					
CO1.3	Building Reuse--Level III: Maintain 100 percent of existing building structure and shell, and 50 percent of non-shell.	1	0					
CO2	Construction Waste Management: Divert debris from landfill disposal.	1-2	-					
CO2.1	Construction Waste Management--Level I: Recycle and salvage at least 50 percent of construction-related waste.	1	1			X	01572A	A waste management plan has been developed.
CO2.2	Construction Waste Management--Level II: Recycle and salvage an additional 25 percent (75 percent by weight) of construction-related waste.	1	0					
CO3	Resource Reuse: Extend the life cycle of target building materials.	1-2	-					
CO3.1	Resource Reuse--Level I: Use salvaged or refurbished materials for 5 percent of total materials.	1	0					
CO3.2	Resource Reuse--Level II: Use salvaged or refurbished materials for 10 percent of total materials.	1	0					
CO4	Recycled Content: Reduce the impact resulting from extraction of resources for new building materials.	1-2	-					
CO4.1	Recycled Content--Level I: A minimum of 25 percent of building materials containing a minimum average of 20 percent post-consumer, or 40 percent post-industrial, recycled material.	1	1		X	X	01670	25% of building material are required to contain, in aggregate, a minimum weighted average of 20% post-consumer or 40% post industrial recycled material.
CO4.2	Recycled Content--Level II: A minimum of 50 percent of building materials containing a minimum average of 20 percent post-consumer, or 40 percent post-industrial, recycled material.	1	0					
CO5	Local/Regional Materials: Reduce the environmental impact of product transportation, support local economy.	1-2	-					
CO5.1	Local/Regional Materials--Level I: At least 20 percent of building materials manufactured within 500-mile radius.	1	1	X	X	X	01670	Specifications have been developed around products that are manufactured regionally within a 500-mile radius.
CO5.2	Local/Regional Materials--Level II: At least 50 percent of building materials not only manufactured, but extracted within 500-mile radius.	1	0					
CO6	Rapidly Renewable Materials: Reduce depletion of finite raw and long-cycle renewable materials.	1	0					
CO7	Certified Wood: Encourage environmentally responsible forest management by ensuring that at least 50 percent of wood-based materials comply with Forest Stewardship Council guidelines.	1	0					
	SUBTOTAL MATERIALS AND RESOURCES:	13	3					

Table 01335-5

LEED Credit Paragraph	LEED Summary Table	Maximum Points Available	Applicable to this Facility Type	Inherent in Design – Note 1	Material Selection 'SDD' – Note 2	Construction Related – Note 3	Specification or Drawing Reference	REMARKS
	ENERGY & ENVIRONMENTAL CATEGORIES							
	P = Prerequisite C = Credit							
	INDOOR ENVIRONMENTAL QUALITY							
PO1	Minimum IAQ Performance: Prevent the development of indoor air quality problems.	P	P	X		X	-	HVAC Systems comply with ASHRAE 62-1999. Procedure employed is ventilation rate.
PO2	Environmental Tobacco Smoke: Prevent occupants' and systems' exposure to ETS.	P	P	X				All Government buildings are non-smoking.
CO1	Carbon Dioxide (CO2) Monitoring: Install a permanent monitoring system, to maintain levels no higher than 530 parts per million.	1	0					
CO2	Increase Ventilation Effectiveness: Provide for effective delivery and mixing of fresh air.	1	0					
CO3	Construction IAQ Management Plan: Prevent air quality resulting from construction process.	1-2	-					
CO3.1	Construction IAQ Management Plan—Level I: Comply with Sheet Metal and Air Conditioning National Contractors' Association (SMACNA) IAQ guidelines.	1	1	X		X	15895	Specifications require compliance during construction with SMACNA IAQ Guidelines for Occupied Buildings Under Construction.
CO3.2	Construction IAQ Management Plan—Level II: Minimum two-week building flush-out, or baseline IAQ testing consistent with current EPA protocol.	1	1	X		X	15995	Specifications require 2 week building flush-out with 100% outside air.
CO4	Low-Emitting Materials: Reduce odorous or potentially irritating IAQ's.	1-4	-					
CO4.1	Low-Emitting Materials—Level I: Guidelines for adhesives and sealants.	1	1	X	X	X	07900A	Specifications require low VOC products.
CO4.2	Low-Emitting Materials—Level II: Guidelines for paints and coatings.	1	1	X	X	X	09900	Specifications require low VOC products.
CO4.3	Low-Emitting Materials—Level III: Guidelines for carpet systems.	1	1	X	X	X	09680A	Specifications require low VOC products.
CO4.4	Low-Emitting Materials—Level IV : Guidelines for composite wood or agrifiber products.	1	0					
CO5	Indoor Chemical and Pollution Source Control: Avoid exposure to hazardous chemicals.	1	1	X			-	All chemical use areas have deck-to-deck physical separation and independent ventilation with an exhaust rate of .50 cfm/s.f. and no re-circulation.
CO6	Controllability of Systems: High level of individual occupant control over thermal, ventilation, and lighting systems.	1-2	-				-	
CO6.1	Controllability of Systems—Level I: A minimum of one operable window and lighting control zone per 200 square feet.	1	1	X			-	Design provides for one operable window and one light control zone per 200 SF for all occupied areas within 15 feet of perimeter wall.
CO6.2	Controllability of Systems—Level II: Airflow, temperature, and lighting controls for each individual for 50 percent of regularly occupied areas.	1	1	X				Design provides for 50% of all regularly occupied non-perimeter areas to have individual air flow, temperature and lighting.
CO7	Thermal Comfort: Support a productive and healthy environment.	1-2	-					
CO7.1	Thermal Comfort—Level I: ASHRAE Standard 55-192, humidity control.	1	0					
CO7.2	Thermal Comfort—Level II: Permanent temperature and humidity monitoring system.	1	0	X				
CO8	Daylighting and Views: Provide a connection between indoor spaces and the outdoor environment.	1-2	-					
CO8.1	Daylighting and Views—Level I: A minimum daylight factor of 2 percent in 75 percent of space used for critical visual tasks.	1	1	X				Design provides for operable blinds to provide direct sun control providing a minimum daylight factor of 2%.
CO8.2	Daylighting and Views—Level II: Direct line of sight to vision glazing from 90 percent of all regularly occupied spaces.	1	1	X				Design provides for direct line of sight to outside for 90% of all regularly occupied spaces.
	SUBTOTAL INDOOR ENVIRONMENTAL QUALITY:	15	10					

Table 01335-6

LEED Credit Paragraph	LEED Summary Table	Maximum Points Available	Applicable to this Facility Type	Inherent in Design – Note 1	Material Selection 'SDD' – Note 2	Construction Related – Note 3	Specification or Drawing Reference	REMARKS
	ENERGY & ENVIRONMENTAL CATEGORIES							
	P = Prerequisite C = Credit							
	ADDITIONAL CREDITS							
CO1	Innovation: An opportunity to receive points for exceptional performance above requirements set by LEED Green Buildings System.	1-4	-					
CO1.1	Innovation--Level I:	1	0					
CO1.2	Innovation--Level II:	1	0					
CO1.3	Innovation--Level III:	1	0					
CO1.4	Innovation--Level IV:	1	0					
CO2	Accredited Professional:	1	1					An accredited professional is required to provide evaluations and calculations.
	SUBTOTAL ADDITIONAL CREDITS:	5	1					
	TOTAL CREDITS SCORED:	69	28					

LEED CERTIFICATION AWARD LEVEL

LEED CERTIFIED: 26-32

SILVER LEVEL: 33-38

GOLD LEVEL: 39-51

PLATINUM LEVEL: 52 OR MORE

NOTES:

1. Points indicated in this column are inherent within the design and no further documentation is required by the contractor.
2. Points indicated in this column are dependent on material selection, product or execution and shall be documented by the contractor.
3. Points indicated in this column are dependent on construction practices, procurement data or cumulative calculations of materials throughout the project. These must be documented by the contractor.
4. See LEED Reference Guide for full description of requirements for each item.
5. Columns marked with a "P" indicate a prerequisite requirement of LEED and must be documented according to the column in which it is entered.

LEED RECYCLED CONTENT WORKSHEET

A	B	B-1	C	D	E	F
MATERIAL	**QUANTITY** (Optional)	**UNIT COST** (Optional)	**TOTAL MATERIAL COST** BxB1	**POST-CONSUMER %**	**POST-INDUST %**	**RECYCLED VALUE ($)** Cx (D/20 + E/40)
Concrete w/fly ash				0	5	$ -
Rebar						$ -
Metal Stairs						$ -
Misc Metals						$ -
Struct Steel				25	0	$ -
Lightgage Steel				25	0	$ -
Metal Deck				25	0	$ -
Metal Roofing						$ -
Gypsum Sheathing						$ -
Gypsum Wallboard						$ -
Ceramic Tile						$ -
Acoustic Tile						$ -
Rubber wall base						$ -
VCT						$ -
Metal soffit/ceiling						$ -
Carpet						$ -
Toilet Partitions						$ -
All Other Materials						$ -
		TOTAL	0		TOTAL	$ -

% Recycled content = 100 x [F Total / C Total]

% Recycled content = #DIV/0!

Notes:
1. Use default value of 25% post-consumer for structural steel, lightgage steel and metal deck unless actual values are known.
2. Use default value of 5% post-industrial for concrete with fly ash unless actual values are known.
3. Materials listed in Column A are examples only - modify as needed to reflect actual materials used with recycled content.
4. Be sure to fill in Column C value for "All Other Materials" so that total materials cost is correct.

SECTION TABLE OF CONTENTS

DIVISION 01 - GENERAL REQUIREMENTS

SECTION 01355A

ENVIRONMENTAL PROTECTION

02/02

PART 1 GENERAL

1.1 REFERENCES
1.2 DEFINITIONS
1.2.1 Environmental Pollution and Damage
1.2.2 Environmental Protection
1.2.3 Contractor Generated Hazardous Waste
1.2.4 Installation Pest Management Coordinator
1.2.4 Project Pesticide Coordinator
1.2.5 Land Application for Discharge Water
1.2.6 Pesticide
1.2.7 Pests
1.2.8 Surface Discharge
1.2.9 Waters of the United States
1.2.10 Wetlands
1.3 GENERAL REQUIREMENTS
1.4 SUBCONTRACTORS
1.5 PAYMENT
1.6 SUBMITTALS
1.7 ENVIRONMENTAL PROTECTION PLAN
1.7.1 Compliance
1.7.2 Contents
1.7.3 Appendix
1.8 PROTECTION FEATURES
1.9 SPECIAL ENVIRONMENTAL REQUIREMENTS
1.10 ENVIRONMENTAL ASSESSMENT OF CONTRACT DEVIATIONS
1.11 NOTIFICATION
1.12 OMITTED

PART 2 PRODUCTS (NOT USED)

PART 3 EXECUTION

3.1 ENVIRONMENTAL PERMITS AND COMMITMENTS
3.2 LAND RESOURCES
3.2.1 Work Area Limits
3.2.2 Landscape
3.2.3 Erosion and Sediment Controls
3.2.4 Contractor Facilities and Work Areas
3.3 WATER RESOURCES
3.3.1 Cofferdams, Diversions, and Dewatering Operations
3.3.2 Omitted
3.3.3 Omitted
3.4 AIR RESOURCES
3.4.1 Particulates
3.4.2 Odors
3.4.3 Sound Intrusions

3.4.4 Burning
3.5 OMITTED
3.6 CHEMICAL MATERIALS MANAGEMENT AND WASTE DISPOSAL
3.6.1 Solid Wastes
3.6.2 Chemicals and Chemical Wastes
3.6.3 Contractor Generated Hazardous Wastes/Excess Hazardous Materials
3.6.4 Fuel and Lubricants
3.6.5 Waste Water
3.7 RECYCLING AND WASTE MINIMIZATION
3.8 NON-HAZARDOUS SOLID WASTE DIVERSION REPORT
3.9 OMITTED
3.10 OMITTED
3.11 INTEGRATED PEST MANAGEMENT
3.11.1 Pesticide Delivery and Storage
3.11.2 Qualifications
3.11.3 Pesticide Handling Requirements
3.11.4 Application
3.12 PREVIOUSLY USED EQUIPMENT
3.13 MAINTENANCE OF POLLUTION FACILITIES
3.14 OMITTED
3.15 TRAINING OF CONTRACTOR PERSONNEL
3.16 OMITTED
3.17 POST CONSTRUCTION CLEANUP

-- End of Section Table of Contents --

UFGS-01355A (February 2002)

SECTION 01355A

ENVIRONMENTAL PROTECTION
02/02

PART 1 GENERAL

1.1 REFERENCES

The publications listed below form a part of this specification to the extent referenced. The publications are referred to in the text by basic designation only.

U.S. AIR FORCE (USAF)

AFI 32-1053	Pest Management Program

U.S. ARMY (DA)

AR 200-5	Pest Management

U.S. NATIONAL ARCHIVES AND RECORDS ADMINISTRATION (NARA)

33 CFR 328	Definitions
40 CFR 68	Chemical Accident Prevention Provisions
40 CFR 152 - 186	Pesticide Programs
40 CFR 260	Hazardous Waste Management System: General
40 CFR 261	Identification and Listing of Hazardous Waste
40 CFR 262	Standards Applicable to Generators of Hazardous Waste
40 CFR 279	Standards for the Management of Used Oil
40 CFR 302	Designation, Reportable Quantities, and Notification
40 CFR 355	Emergency Planning and Notification
49 CFR 171 - 178	Hazardous Materials Regulations

U.S. ARMY CORPS OF ENGINEERS (USACE)

EM 385-1-1	(1996) U.S. Army Corps on Engineers Safety and Health Requirements Manual

WETLAND MANUAL Corps of Engineers Wetlands Delineation Manual Technical Report Y-87-1

1.2 DEFINITIONS

1.2.1 Environmental Pollution and Damage

Environmental pollution and damage is the presence of chemical, physical, or biological elements or agents which adversely affect human health or welfare; unfavorably alter ecological balances of importance to human life; affect other species of importance to humankind; or degrade the environment aesthetically, culturally and/or historically.

1.2.2 Environmental Protection

Environmental protection is the prevention/control of pollution and habitat disruption that may occur to the environment during construction. The control of environmental pollution and damage requires consideration of land, water, and air; biological and cultural resources; and includes management of visual aesthetics; noise; solid, chemical, gaseous, and liquid waste; radiant energy and radioactive material as well as other pollutants.

1.2.3 Contractor Generated Hazardous Waste

Contractor generated hazardous waste means materials that, if abandoned or disposed of, may meet the definition of a hazardous waste. These waste streams would typically consist of material brought on site by the Contractor to execute work, but are not fully consumed during the course of construction. Examples include, but are not limited to, excess paint thinners (i.e. methyl ethyl ketone, toluene etc.), waste thinners,excess paints, excess solvents, waste solvents, and excess pesticides, and contaminated pesticide equipment rinse water.

1.2.4 Installation Pest Management Coordinator

Installation Pest Management Coordinator (IPMC) is the individual officially designated by the Installation Commander to oversee the Installation Pest Management Program and the Installation Pest Management Plan.

1.2.4 Project Pesticide Coordinator

The Project Pesticide Coordinator (PPC) is an individual that resides at a Civil Works Project office and that is responsible for oversight of pesticide application on Project grounds.

1.2.5 Land Application for Discharge Water

The term "Land Application" for discharge water implies that the Contractor shall discharge water at a rate which allows the water to percolate into the soil. No sheeting action, soil erosion, discharge into storm sewers, discharge into defined drainage areas, or discharge into the "waters of the United States" shall occur. Land Application shall be in compliance with all applicable Federal, State, and local laws and regulations.

1.2.6 Pesticide

Pesticide is defined as any substance or mixture of substances intended for preventing, destroying, repelling, or mitigating any pest, or intended for use as a plant regulator, defoliant or desiccant.

1.2.7 Pests

The term "pests" means arthropods, birds, rodents, nematodes, fungi, bacteria, viruses, algae, snails, marine borers, snakes, weeds and other organisms (except for human or animal disease-causing organisms) that adversely affect readiness, military operations, or the well-being of personnel and animals; attack or damage real property, supplies, equipment, or vegetation; or are otherwise undesirable.

1.2.8 Surface Discharge

The term "Surface Discharge" implies that the water is discharged with possible sheeting action and subsequent soil erosion may occur. Waters that are surface discharged may terminate in drainage ditches, storm sewers,creeks, and/or "waters of the United States" and would require a permit to discharge water from the governing agency.

1.2.9 Waters of the United States

All waters which are under the jurisdiction of the Clean Water Act, as defined in 33 CFR 328.

1.2.10 Wetlands

Wetlands means those areas that are inundated or saturated by surface or ground water at a frequency and duration sufficient to support, and that under normal circumstances do support, a prevalence of vegetation typically adapted for life in saturated soil conditions. Wetlands generally include swamps, marshes, and bogs. Official determination of whether or not an area is classified as a wetland must be done in accordance with WETLAND MANUAL.

1.3 GENERAL REQUIREMENTS

The Contractor shall minimize environmental pollution and damage that may occur as the result of construction operations. The environmental resources within the project boundaries and those affected outside the limits of permanent work shall be protected during the entire duration of this contract. The Contractor shall comply with all applicable environmental Federal, State, and local laws and regulations. The Contractor shall be responsible for any delays resulting from failure to comply with environmental laws and regulations.

1.4 SUBCONTRACTORS

The Contractor shall ensure compliance with this section by subcontractors.

1.5 PAYMENT

No separate payment will be made for work covered under this section. The Contractor shall be responsible for payment of fees associated with environmental permits, application, and/or notices obtained by the Contractor. All costs associated with this section shall be included in

the contract price. The Contractor shall be responsible for payment of all fines/fees for violation or non-compliance with Federal, State, Regional and local laws and regulations.

1.6 SUBMITTALS

Government approval is required for submittals with a "G" designation; submittals not having a "G" designation are for information only. When used, a designation following the "G" designation identifies the office that will review the submittal for the Government. The following shall be submitted in accordance with Section 01330 SUBMITTAL PROCEDURES:

SD-01 Preconstruction Submittals

Environmental Protection Plan; G, RE

The environmental protection plan.

1.7 ENVIRONMENTAL PROTECTION PLAN

Prior to commencing construction activities or delivery of materials to the site, the Contractor shall submit an Environmental Protection Plan for review and approval by the Contracting Officer. The purpose of the Environmental Protection Plan is to present a comprehensive overview of known or potential environmental issues which the Contractor must address during construction. Issues of concern shall be defined within the Environmental Protection Plan as outlined in this section. The Contractor shall address each topic at a level of detail commensurate with the environmental issue and required construction task(s). Topics or issues which are not identified in this section, but which the Contractor considers necessary, shall be identified and discussed after those items formally identified in this section. Prior to submittal of the Environmental Protection Plan, the Contractor shall meet with the Contracting Officer for the purpose of discussing the implementation of the initial Environmental Protection Plan; possible subsequent additions and revisions to the plan including any reporting requirements; and methods for administration of the Contractor's Environmental Plans. The Environmental Protection Plan shall be current and maintained onsite by the Contractor.

1.7.1 Compliance

No requirement in this Section shall be construed as relieving the Contractor of any applicable Federal, State, and local environmental protection laws and regulations. During Construction, the Contractor shall be responsible for identifying, implementing, and submitting for approval any additional requirements to be included in the Environmental Protection Plan.

1.7.2 Contents

The environmental protection plan shall include, but shall not be limited to, the following:

a. Name(s) of person(s) within the Contractor's organization who is(are) responsible for ensuring adherence to the Environmental Protection Plan.

b. Name(s) and qualifications of person(s) responsible for manifesting hazardous waste to be removed from the site, if applicable.

c. Name(s) and qualifications of person(s) responsible for training the Contractor's environmental protection personnel.

d. Description of the Contractor's environmental protection personnel training program.

e. An erosion and sediment control plan which identifies the type and location of the erosion and sediment controls to be provided. The plan shall include monitoring and reporting requirements to assure that the control measures are in compliance with the erosion and sediment control plan, Federal, State, and local laws and regulations. A Storm Water Pollution Prevention Plan (SWPPP) may be substituted for this plan.

f. Drawings showing locations of proposed temporary excavations or embankments for haul roads, stream crossings, material storage areas, structures, sanitary facilities, and stockpiles of excess or spoil materials including methods to control runoff and to contain materials on the site.

g. Traffic control plans including measures to reduce erosion of temporary roadbeds by construction traffic, especially during wet weather. Plan shall include measures to minimize the amount of mud transported onto paved public roads by vehicles or runoff.

h. Work area plan showing the proposed activity in each portion of the area and identifying the areas of limited use or nonuse. Plan should include measures for marking the limits of use areas including methods for protection of features to be preserved within authorized work areas.

i. The Spill Control plan shall include the procedures, instructions, and reports to be used in the event of an unforeseen spill of a substance regulated by 40 CFR 68, 40 CFR 302, 40 CFR 355, and/or regulated under State or Local laws and regulations. The Spill Control Plan supplements the requirements of EM 385-1-1. This plan shall include as a minimum:

1. The name of the individual who will report any spills or hazardous substance releases and who will follow up with complete documentation. This individual shall immediately notify the Contracting Officer and Facility Response Personnel in addition to the legally required Federal, State, and local reporting channels (including the National Response Center 1-800-424-8802) if a reportable quantity is released to the environment. The plan shall contain a list of the required reporting channels and telephone numbers.

2. The name and qualifications of the individual who will be responsible for implementing and supervising the containment and cleanup.

3. Training requirements for Contractor's personnel and methods of accomplishing the training.

4. A list of materials and equipment to be immediately available at the job site, tailored to cleanup work of the potential hazard(s) identified.

5. The names and locations of suppliers of containment materials and locations of additional fuel oil recovery, cleanup, restoration, and material-placement equipment available in case of an unforeseen spill emergency.

6. The methods and procedures to be used for expeditious contaminant cleanup.

j. A non-hazardous solid waste disposal plan identifying methods and locations for solid waste disposal including clearing debris. The plan shall include schedules for disposal. The Contractor shall identify any subcontractors responsible for the transportation and disposal of solid waste. Licenses or permits shall be submitted for solid waste disposal sites that are not a commercial operating facility. Evidence of the disposal facility's acceptance of the solid waste shall be attached to this plan during the construction. The Contractor shall attach a copy of each of the Non-hazardous Solid Waste Diversion Reports to the disposal plan. The report shall be submitted on the first working day after the first quarter that non-hazardous solid waste has been disposed and/or diverted and shall be for the previous quarter (e.g. the first working day of January, April, July, and October). The report shall indicate the total amount of waste generated and total amount of waste diverted in cubic yards or tons along with the percent that was diverted.

k. A recycling and solid waste minimization plan with a list of measures to reduce consumption of energy and natural resources. The plan shall detail the Contractor's actions to comply with and to participate in Federal, State, Regional, and local government sponsored recycling programs to reduce the volume of solid waste at the source.

l. An air pollution control plan detailing provisions to assure that dust, debris, materials, trash, etc., do not become air borne and travel off the project site.

m. A contaminant prevention plan that: identifies potentially hazardous substances to be used on the job site; identifies the intended actions to prevent introduction of such materials into the air, water, or ground; and details provisions for compliance with Federal, State, and local laws and regulations for storage and handling of these materials. In accordance with EM 385-1-1, a copy of the Material Safety Data Sheets (MSDS) and the maximum quantity of each hazardous material to be on site at any given time shall be included in the contaminant prevention plan. As new hazardous materials are brought on site or removed from the site, the plan shall be updated.

n. A waste water management plan that identifies the methods and procedures for management and/or discharge of waste waters which are directly derived from construction activities, such as concrete curing water, clean-up water, dewatering of ground water, disinfection water, hydrostatic test water, and water used in flushing of lines. If a settling/retention pond is required, the plan shall include the design of the pond including drawings, removal plan, and testing requirements for possible pollutants. If land application will be the method of disposal for the waste water, the plan shall include a sketch showing the location for land application along with a description of the pretreatment methods to be implemented. If surface discharge will be the method of disposal, a copy of the permit and associated documents shall be included as an attachment prior to discharging the waste

water. If disposal is to a sanitary sewer, the plan shall include documentation that the Waste Water Treatment Plant Operator has approved the flow rate, volume, and type of discharge.

o. A historical, archaeological, cultural resources biological resources and wetlands plan that defines procedures for identifying and protecting historical, archaeological, cultural resources, biological resources and wetlands known to be on the project site: and/or identifies procedures to be followed if historical archaeological, cultural resources, biological resources and wetlands not previously known to be onsite or in the area are discovered during construction. The plan shall include methods to assure the protection of known or discovered resources and shall identify lines of communication between Contractor personnel and the Contracting Officer.

p. A pesticide treatment plan shall be included and updated, as information becomes available. The plan shall include: sequence of treatment, dates, times, locations, pesticide trade name, EPA registration numbers, authorized uses, chemical composition, formulation, original and applied concentration, application rates of active ingredient (i.e. pounds of active ingredient applied), equipment used for application and calibration of equipment. The Contractor is responsible for Federal, State, Regional and Local pest management record keeping and reporting requirements as well as any additional Installation Project Office specific requirements. The Contractor shall follow AFI 32-1053 Sections 3.4.13 and 3.4.14 for data required to be reported to the Installation.

1.7.3 Appendix

Copies of all environmental permits, permit application packages, approvals to construct, notifications, certifications, reports, and termination documents shall be attached,as an appendix, to the Environmental Protection Plan.

1.8 PROTECTION FEATURES

This paragraph supplements the Contract Clause PROTECTION OF EXISTING VEGETATION, STRUCTURES, EQUIPMENT, UTILITIES, AND IMPROVEMENTS. Prior to start of any onsite construction activities, the Contractor and the Contracting Officer shall make a joint condition survey. Immediately following the survey, the Contractor shall prepare a brief report including a plan describing the features requiring protection under the provisions of the Contract Clauses, which are not specifically identified on the drawings as environmental features requiring protection along with the condition of trees, shrubs and grassed areas immediately adjacent to the site of work and adjacent to the Contractor's assigned storage area and access route(s), as applicable. This survey report shall be signed by both the the Contractor and the Contracting Officer upon mutual agreement as to its accuracy and completeness. The Contractor shall protect those environmental features included in the survey report and any indicated on the drawings, regardless of interference which their preservation may cause to the Contractor's work under the contract.

1.9 SPECIAL ENVIRONMENTAL REQUIREMENTS

The Contractor shall comply with the special environmental requirements listed here and included at the end of this section.

1.10 ENVIRONMENTAL ASSESSMENT OF CONTRACT DEVIATIONS

Any deviations, requested by the Contractor, from the drawings,plans and specifications which may have an environmental impact will be subject to approval by the Contracting Officer and may require an extended review, processing, and approval time. The Contracting Officer reserves the right to disapprove alternate methods, even if they are more cost effective, if the Contracting Officer determines that the proposed alternate method will have an adverse environmental impact.

1.11 NOTIFICATION

The Contracting Officer will notify the Contractor in writing of any observed noncompliance with Federal, State or local environmental laws or regulations, permits, and other elements of the Contractor's Environmental Protection plan. The Contractor shall, after receipt of such notice, inform the Contracting Officer of the proposed corrective action and take such action when approved by the Contracting Officer. The Contracting Officer may issue an order stopping all or part of the work until satisfactory corrective action has been taken. No time extensions shall be granted or equitable adjustments allowed to the Contractor for any such suspensions. This is in addition to any other actions the Contracting Officer may take under the contract, or in accordance with the Federal Acquisition Regulation or Federal Law.

1.12 OMITTED

PART 2 PRODUCTS (NOT USED)

PART 3 EXECUTION

3.1 ENVIRONMENTAL PERMITS AND COMMITMENTS

The Contractor shall be responsible for obtaining and complying with all environmental permits and commitments required by Federal, State, Regional, and local environmental laws and regulations.

3.2 LAND RESOURCES

The Contractor shall confine all activities to areas defined by the drawings and specifications. Prior to the beginning of any construction, the Contractor shall identify any land resources to be preserved within the work area. Except in areas indicated on the drawings or specified to be cleared, the Contractor shall not remove, cut, deface, injure, or destroy land resources including trees, shrubs, vines, grasses, topsoil, and land forms without approval. No ropes, cables, or guys shall be fastened to or attached to any trees for anchorage unless specifically authorized. The Contractor shall provide effective protection for land and vegetation resources at all times as defined in the following subparagraphs. Stone, soil, or other materials displaced into uncleared areas shall be removed by the Contractor.

3.2.1 Work Area Limits

Prior to commencing construction activities, the Contractor shall mark the areas that need not be disturbed under this contract. Isolated areas within the general work area which are not to be disturbed shall be marked or fenced. Monuments and markers shall be protected before construction operations commence. Where construction operations are to be conducted

during darkness, any markers shall be visible in the dark. The Contractor's personnel shall be knowledgeable of the purpose for marking and/or protecting particular objects.

3.2.2 Landscape

Trees, shrubs, vines, grasses, land forms and other landscape features indicated and defined on the drawings to be preserved shall be clearly identified by marking, fencing, or wrapping with boards, or any other approved techniques. The Contractor shall restore landscape features damaged or destroyed during construction operations outside the limits of the approved work area.

3.2.3 Erosion and Sediment Controls

The Contractor shall be responsible for providing erosion and sediment control measures in accordance with Federal, State, and local laws and regulations. The erosion and sediment controls selected and maintained by the Contractor shall be such that water quality standards are not violated as a result of the Contractor's construction activities. The area of bare soil exposed at any one time by construction operations should be kept to a minimum. The Contractor shall construct or install temporary and permanent erosion and sediment control best management practices (BMPs) as indicated on the drawings. BMPs may include, but not be limited to, vegetation cover, stream bank stabilization, slope stabilization, silt fences, construction of terraces, interceptor channels, sediment traps, inlet and outfall protection, diversion channels, and sedimentation basins. Any temporary measures shall be removed after the area has been stabilized.

3.2.4 Contractor Facilities and Work Areas

The Contractor's field offices, staging areas, stockpile storage, and temporary buildings shall be placed in areas designated on the drawings or as directed by the Contracting Officer. Temporary movement or relocation of Contractor facilities shall be made only when approved. Erosion and sediment controls shall be provided for on-site borrow and spoil areas to prevent sediment from entering nearby waters. Temporary excavation and embankments for plant and/or work areas shall be controlled to protect adjacent areas.

3.3 WATER RESOURCES

The Contractor shall monitor construction activities to prevent pollution of surface and ground waters. Toxic or hazardous chemicals shall not be applied to soil or vegetation unless otherwise indicated. All water areas affected by construction activities shall be monitored by the Contractor. For construction activities immediately adjacent to impaired surface waters, the Contractor shall be capable of quantifying sediment or pollutant loading to that surface water when required by State or Federally issued Clean Water Act permits.

3.3.1 Cofferdams, Diversions, and Dewatering Operations

Construction operations for dewatering, removal of cofferdams, tailrace excavation, and tunnel closure shall be controlled at all times to maintain compliance with existing State water quality standards and designated uses of the surface water body. The Contractor shall comply with the State of Georgia water quality standards and anti-degradation provisions.

3.3.2 Omitted
3.3.3 Omitted

3.4 AIR RESOURCES

Equipment operation, activities, or processes performed by the Contractor shall be in accordance with all Federal and State air emission and performance laws and standards.

3.4.1 Particulates

Dust particles; aerosols and gaseous by-products from construction activities; and processing and preparation of materials, such as from asphaltic batch plants; shall be controlled at all times, including weekends, holidays and hours when work is not in progress. The Contractor shall maintain excavations, stockpiles, haul roads, permanent and temporary access roads, plant sites, spoil areas, borrow areas, and other work areas within or outside the project boundaries free from particulates which would cause the Federal, State, and local air pollution standards to be exceeded or which would cause a hazard or a nuisance. Sprinkling, chemical treatment of an approved type, baghouse, scrubbers, electrostatic precipitators or other methods will be permitted to control particulates in the work area. Sprinkling, to be efficient, must be repeated to keep the disturbed area damp at all times. The Contractor must have sufficient, competent equipment available to accomplish these tasks. Particulate control shall be performed as the work proceeds and whenever a particulate nuisance or hazard occurs. The Contractor shall comply with all State and local visibility regulations.

3.4.2 Odors

Odors from construction activities shall be controlled at all times. The odors shall not cause a health hazard and shall be in compliance with State regulations and/or local ordinances.

3.4.3 Sound Intrusions

The Contractor shall keep construction activities under surveillance and control to minimize environment damage by noise. The Contractor shall comply with the provisions of the State of Georgia rules.

3.4.4 Burning

Burning shall be prohibited on the Government premises.

3.5 OMITTED

3.6 CHEMICAL MATERIALS MANAGEMENT AND WASTE DISPOSAL

Disposal of wastes shall be as directed below, unless otherwise specified in other sections and/or shown on the drawings.

3.6.1 Solid Wastes

Solid wastes (excluding clearing debris) shall be placed in containers which are emptied on a regular schedule. Handling, storage, and disposal shall be conducted to prevent contamination. Segregation measures shall be employed so that no hazardous or toxic waste will become co-mingled with solid waste. The Contractor shall transport solid waste off Government

property and dispose of it in compliance with Federal, State, and local requirements for solid waste disposal. A Subtitle D RCRA permitted landfill shall be the minimum acceptable off-site solid waste disposal option. The Contractor shall verify that the selected transporters and disposal facilities have the necessary permits and licenses to operate.

3.6.2 Chemicals and Chemical Wastes

Chemicals shall be dispensed ensuring no spillage to the ground or water. Periodic inspections of dispensing areas to identify leakage and initiate corrective action shall be performed and documented. This documentation will be periodically reviewed by the Government. Chemical waste shall be collected in corrosion resistant, compatible containers. Collection drums shall be monitored and removed to a staging or storage area when contents are within 6 inches of the top. Wastes shall be classified, managed, stored, and disposed of in accordance with Federal, State, and local laws and regulations.

3.6.3 Contractor Generated Hazardous Wastes/Excess Hazardous Materials

Hazardous wastes are defined in 40 CFR 261, or are as defined by applicable State and local regulations. Hazardous materials are defined in 49 CFR 171 - 178. The Contractor shall, at a minimum, manage and store hazardous waste in compliance with 40 CFR 262 and shall manage and store hazardous waste in accordance with the Installation hazardous waste management plan. The Contractor shall take sufficient measures to prevent spillage of hazardous and toxic materials during dispensing. The Contractor shall segregate hazardous waste from other materials and wastes, shall protect it from the weather by placing it in a safe covered location, and shall take precautionary measures such as berming or other appropriate measures against accidental spillage. The Contractor shall be responsible for storage, describing, packaging, labeling, marking, and placarding of hazardous waste and hazardous material in accordance with 49 CFR 171 - 178, State, and local laws and regulations. The Contractor shall transport Contractor generated hazardous waste off Government property within 60 days in accordance with the Environmental Protection Agency and the Department of Transportation laws and regulations. The Contractor shall dispose of hazardous waste in compliance with Federal, State and local laws and regulations. Spills of hazardous or toxic materials shall be immediately reported to the Contracting Officer and the Facility Environmental Office. Cleanup and cleanup costs due to spills shall be the Contractor's responsibility. The disposition of Contractor generated hazardous waste and excess hazardous materials are the Contractor's responsibility. The Contractor shall coordinate the disposition of hazardous waste with the Facility's Hazardous Waste Manager and the Contracting Officer.

3.6.4 Fuel and Lubricants

Storage, fueling and lubrication of equipment and motor vehicles shall be conducted in a manner that affords the maximum protection against spill and evaporation. Fuel, lubricants and oil shall be managed and stored in accordance with all Federal, State, Regional, and local laws and regulations. Used lubricants and used oil to be discarded shall be stored in marked corrosion-resistant containers and recycled or disposed in accordance with 40 CFR 279, State, and local laws and regulations. There shall be no storage of fuel on the project site. Fuel must be brought to the project site each day that work is performed.

3.6.5 Waste Water

Disposal of waste water shall be as specified below.

a. Waste water from construction activities, such as onsite material processing, concrete curing, foundation and concrete clean-up, water used in concrete trucks, forms, etc. shall not be allowed to enter water ways or to be discharged prior to being treated to remove pollutants. The Contractor shall dispose of the construction related waste water off-Government property in accordance with all Federal, State, Regional and Local laws and regulations. or by collecting and placing it in a retention pond where suspended material can be settled out and/or the water can evaporate to separate pollutants from the water. The site for the retention pond shall be coordinated and approved with the Contracting Officer. The residue left in the pond prior to completion of the project shall be removed, tested, and disposed off-Government property in accordance with Federal, State, and local laws and regulations. The area shall be backfilled to the original grade, top-soiled and seeded/sodded.

b. For discharge of ground water, the Contractor shall land apply on the project site. Land application shall be in accordance with all Federal, State, Regional, and/or Local laws and regulations for pumping and land applying ground water.

c. Water generated from the flushing of lines after disinfection or disinfection in conjunction with hydrostatic testing shall be land applied in accordance with all Federal, State, and local laws and regulations for land application.

3.7 RECYCLING AND WASTE MINIMIZATION

The Contractor shall participate in State and local government sponsored recycling programs. The Contractor is further encouraged to minimize solid waste generation throughout the duration of the project. .

3.8 NON-HAZARDOUS SOLID WASTE DIVERSION REPORT

The Contractor shall maintain an inventory of non-hazardous solid waste diversion and disposal of construction and demolition debris. The Contractor shall submit a report to the Contracting Officer on the first working day after each fiscal year quarter, starting the first quarter that non-hazardous solid waste has been generated. The following shall be included in the report:

a. Construction and Demolition (C&D) Debris Disposed = _____ in cubic yards or tons, as appropriate.

b. Construction and Demolition (C&D) Debris Recycled = _____ in cubic yards or tons, as appropriate.

c. Total C&D Debris Generated = _____ in cubic yards or tons, as appropriate.

d. Waste Sent to Waste-To-Energy Incineration Plant (This amount should not be included in the recycled amount) = _____ in cubic yards or tons, as appropriate.

3.9 OMITTED
3.10 OMITTED

3.11 INTEGRATED PEST MANAGEMENT

In order to minimize impacts to existing fauna and flora, the Contractor, through the Contracting Officer, shall coordinate with the Installation Pest Management Coordinator (IPMC)Project Pesticide Coordinator (PPC) at the earliest possible time prior to pesticide application. The Contractor shall discuss integrated pest management strategies with the IPMC and receive concurrence from the IPMC through the COR prior to the application of any pesticide associated with these specifications. Installation Project Office Pest Management personnel shall be given the opportunity to be present at all meetings concerning treatment measures for pest or disease control and during application of the pesticide. For termiticide requirements see Section 02364A TERMITICIDE TREATMENT MEASURES FOR SUBTERRANEAN TERMITE CONTROL. The use and management of pesticides are regulated under 40 CFR 152 - 186.

3.11.1 Pesticide Delivery and Storage

Pesticides shall be delivered to the site in the original, unopened containers bearing legible labels indicating the EPA registration number and the manufacturer's registered uses. Pesticides shall be stored according to manufacturer's instructions and under lock and key when unattended.

3.11.2 Qualifications

For the application of pesticides, the Contractor shall use the services of a subcontractor whose principal business is pest control. The subcontractor shall be licensed and certified in the state where the work is to be performed.

3.11.3 Pesticide Handling Requirements

The Contractor shall formulate, treat with, and dispose of pesticides and associated containers in accordance with label directions and shall use the clothing and personal protective equipment specified on the labeling for use during all phases of the application. Material Safety Data Sheets (MSDS)shall be available for all pesticide products.

3.11.4 Application

Pesticides shall be applied by a State Certified Pesticide Applicator in accordance with EPA label restrictions and recommendation. The Certified Applicator shall wear clothing and personal protective equipment as specified on the pesticide label. Water used for formulating shall only come from locations designated by the Contracting Officer. The Contractor shall not allow the equipment to overflow. Prior to application of pesticide, all equipment shall be inspected for leaks, clogging, wear, or damage and shall be repaired prior to being used.

3.12 PREVIOUSLY USED EQUIPMENT

The Contractor shall clean all previously used construction equipment prior to bringing it onto the project site. The Contractor shall ensure that the equipment is free from soil residuals, egg deposits from plant pests, noxious weeds, and plant seeds. The Contractor shall consult with the USDA

jurisdictional office for additional cleaning requirements.

3.13 MAINTENANCE OF POLLUTION FACILITIES

The Contractor shall maintain permanent and temporary pollution control facilities and devices for the duration of the contract or for that length of time construction activities create the particular pollutant.

3.14 OMITTED

3.15 TRAINING OF CONTRACTOR PERSONNEL

The Contractor's personnel shall be trained in all phases of environmental protection and pollution control. The Contractor shall conduct environmental protection/pollution control meetings for all Contractor personnel prior to commencing construction activities. Additional meetings shall be conducted for new personnel and when site conditions change. The training and meeting agenda shall include: methods of detecting and avoiding pollution; familiarization with statutory and contractual pollution standards; installation and care of devices, vegetative covers, and instruments required for monitoring purposes to ensure adequate and continuous environmental protection/pollution control; anticipated hazardous or toxic chemicals or wastes, and other regulated contaminants; recognition and protection of archaeological sites, artifacts, wetlands, and endangered species and their habitat that are known to be in the area.

3.16 OMITTED

3.17 POST CONSTRUCTION CLEANUP

The Contractor shall clean up all areas used for construction in accordance with Contract Clause: "Cleaning Up". The Contractor shall, unless otherwise instructed in writing by the Contracting Officer, obliterate all signs of temporary construction facilities such as haul roads, work area, structures, foundations of temporary structures, stockpiles of excess or waste materials, and other vestiges of construction prior to final acceptance of the work. The disturbed area shall be graded, filled and the entire area seeded unless otherwise indicated.

-- End of Section --

SECTION TABLE OF CONTENTS

DIVISION 01 - GENERAL REQUIREMENTS

SECTION 01420

SOURCES FOR REFERENCE PUBLICATIONS

03/03

PART 1 GENERAL

0.1 REFERENCES
1.2 ORDERING INFORMATION

-- End of Section Table of Contents --

SECTION 01420

SOURCES FOR REFERENCE PUBLICATIONS
03/03

PART 1 GENERAL

0.1 REFERENCES

Various publications are referenced in other sections of the specifications to establish requirements for the work. These references are identified in each section by document number, date and title. The document number used in the citation is the number assigned by the standards producing organization, (e.g. ASTM B 564 Nickel Alloy Forgings). However, when the standards producing organization has not assigned a number to a document, an identifying number has been assigned for reference purposes.

1.2 ORDERING INFORMATION

The addresses of the standards publishing organizations whose documents are referenced in other sections of these specifications are listed below, and if the source of the publications is different from the address of the sponsoring organization, that information is also provided. Documents listed in the specifications with numbers which were not assigned by the standards producing organization should be ordered from the source by title rather than by number.

ACI INTERNATIONAL (ACI)
P.O. Box 9094
Farmington Hills, MI 48333-9094
Ph: 248-848-3700
Fax: 248-848-3701
Internet: http://www.aci-int.org

AIR CONDITIONING AND REFRIGERATION INSTITUTE (ARI)
4100 North Fairfax Dr., Suite 200
ATTN: Pubs Dept.
Arlington, VA 22203
Ph: 703-524-8800
Fax: 703-528-3816
E-mail: ari@ari.org
Internet: http://www.ari.org

AIR CONDITIONING CONTRACTORS OF AMERICA (ACCA)
2800 Shirlington Road, Suite 300
Arlington, VA 22206
Ph: 703-575-4477
FAX: 703-575-4449
Internet: http://www.acca.org

AIR DIFFUSION COUNCIL (ADC)
1000 East Woodfield Road, Suite 102
Shaumburg, IL 60173-5921

Ph: 847-706-6750
Fax: 847-706-6751
Internet: http://www.flexibleduct.org

AIR MOVEMENT AND CONTROL ASSOCIATION INTERNATIONAL(AMCA)
30 W. University Dr.
Arlington Heights, IL 60004-1893
Ph: 847-394-0150
Fax: 847-253-0088
Internet: http://www.amca.org

ALUMINUM ASSOCIATION (AA)
900 19th Street N.W., Ste 300
Washington, DC 20006
Ph: 202-862-5100
Fax: 202-862-5164
Internet: http://www.aluminum.org

AMERICAN ARCHITECTURAL MANUFACTURERS ASSOCIATION (AAMA)
1827 Walden Ofc. Sq.
Suite 104
Schaumburg, IL 60173-4268
Ph: 847-303-5664
Fax: 847-303-5774
Internet: http://www.aamanet.org

AMERICAN ASSOCIATION OF STATE HIGHWAY AND TRANSPORTATION OFFICIALS (AASHTO)
444 N. Capital St., NW, Suite 249
Washington, DC 20001
Ph: 202-624-5800
Fax: 202-624-5806
Internet: http://www.aashto.org

AMERICAN ASSOCIATION OF TEXTILE CHEMISTS AND COLORISTS (AATCC)
P.O. Box 12215
Research Triangle Park, NC 27709-2215
Ph: 919-549-8141
Fax: 919-549-8933
Internet: http://www.aatcc.org

AMERICAN BEARING MANUFACTURERS ASSOCIATION (ABMA)
2025 M Street, NW, Suite 800
Washington, DC 20036
Ph: 202-367-1155
Fax: 202-367-2155
Internet: http://www.abma-dc.org

AMERICAN BOILER MANUFACTURERS ASSOCIATION (ABMA)
4001 North 9th Street, Suite 226
Arlington, VA 22203-1900
Ph: 703-522-7350

Fax: 703-522-2665
Internet: http://www.abma.com

AMERICAN CONCRETE PIPE ASSOCIATION (ACPA)
222 West Las Colinas Blvd., Suite 641
Irving, TX 75039-5423
Ph: 972-506-7216 or 800-290-2272
Fax: 972-506-7682
Internet: http://www.concrete-pipe.org
e-mail: info@concrete-pipe.org

AMERICAN CONFERENCE OF GOVERNMENTAL INDUSTRIAL HYGIENISTS (ACGIH)
1330 Kemper Meadow Dr.

Cincinnati, OH 45240
Ph: 513-742-2020
Fax: 513-742-3355
Internet: http://www.acgih.org
E-mail: mail@acgih.org

AMERICAN FOREST & PAPER ASSOCIATION (AF&PA)
American Wood Council
ATTN: Publications Dept.
1111 Nineteenth St. NW, Suite 800
Washington, DC 20036
Ph: 800-878-8878 or 202-463-2700
Fax: 202-463-2785
Internet: http://www.afandpa.org/

AMERICAN GAS ASSOCIATION (AGA)
400 N. Capitol St. N.W.Suite 450
Washington, D.C. 20001
Ph: 202-824-7000
Fax: 202-824-7115
Internet: http://www.aga.org

AMERICAN GAS ASSOCIATION LABORATORIES (AGAL)
400 N. Capitol St. N.W.Suite 450
Washington, D.C. 20001
Ph: 202-824-7000
Fax: 202-824-7115
Internet: http://www.aga.org

AMERICAN GEAR MANUFACTURERS ASSOCIATION (AGMA)
1500 King St., Suite 201
Alexandria, VA 22314-2730
Ph: 703-684-0211
Fax: 703-684-0242
Internet: http://www.agma.org

AMERICAN INSTITUTE OF STEEL CONSTRUCTION (AISC)
One East Wacker Dr., Suite 3100

Chicago, IL 60601-2001
Ph: 312-670-2400
Publications: 800-644-2400
Fax: 312-670-5403
Internet: http://www.aisc.org

AMERICAN INSTITUTE OF TIMBER CONSTRUCTION (AITC)
7012 So. Revere Parkway, Suite 140
Englewood, CO 80112
Ph: 303-792-9559
Fax: 303-792-0669
Internet: http://www.aitc-glulam.org

AMERICAN IRON AND STEEL INSTITUTE (AISI)
1140 Connecticut Avenue, NW, Suite 705
Washington, DC 20036
Ph: 202-452-7100
FX: 202-463-6573
Internet: http://www.steel.org

AMERICAN NATIONAL STANDARDS INSTITUTE (ANSI)
1819 L Street, NW, 6th Floor
Washington, DC 20036
Ph: 202-293-8020
Fax: 202-293-9287
Internet: http://www.ansi.org/

Note --- Documents beginning with the letter "S" can be ordered from:

Acoustical Society of America
2 Huntington Quadrangle, Suite 1NO1
Melville, NY 11747-4502
Ph: 516-576-2360
Fax: 516-576-2377
Internet: http://asa.aip.org
General e-mail: asa@aip.org

AMERICAN NURSERY AND LANDSCAPE ASSOCIATION (ANLA)
1000 Vermont Avenue, NW, Suite 300
Washington, DC 20005-4914
Ph: 202-789-2900
FAX: 202-789-1893
Internet: http://www.anla.org

AMERICAN PETROLEUM INSTITUTE (API)
1220 L St., NW
Washington, DC 20005-4070
Ph: 202-682-8000
Fax: 202-682-8223
Internet: http://www.api.org

AMERICAN PUBLIC HEALTH ASSOCIATION (APHA)
800 I Street, NW

Washington, DC 20001
PH: 202-777-2742
FAX: 202-777-2534
Internet: http://www.apha.org

AMERICAN RAILWAY ENGINEERING AND MAINTENANCE-OF-WAY ASSOCIATION (AREMA)
8201 Corporate Dr., Suite 1125
Landover, MD 20785-2230
Ph: 301-459-3200
Fax: 301-459-8077
Internet: http://www.arema.org

AMERICAN SOCIETY FOR NONDESTRUCTIVE TESTING (ASNT)
1711 Arlingate Lane
P.O. Box 28518
Columbus, OH 43228-0518
Ph: 800-222-2768; 614-274-6003
Fax: 614-274-6899
Internet: http://www.asnt.org

AMERICAN SOCIETY FOR QUALITY (ASQ)
600 North Plankinton Avenue
Milwaukee, WI 53203
Ph: 800-248-1946; 414-272-8575
Fax: 414-272-1734
Internet: http://www.asq.org

AMERICAN SOCIETY OF CIVIL ENGINEERS (ASCE)
1801 Alexander Bell Drive
Reston, VA 20191-4400
Ph: 703-295-6300 - 800-548-2723
Fax: 703-295-6222
Internet: http://www.asce.org
e-mail: marketing@asce.org

AMERICAN SOCIETY OF HEATING, REFRIGERATING AND AIR-CONDITIONING ENGINEERS (ASHRAE)
1791 Tullie Circle, NE
Atlanta, GA 30329
Ph: 800-527-4723 or 404-636-8400
Fax: 404-321-5478
Internet: http://www.ashrae.org

AMERICAN SOCIETY OF SANITARY ENGINEERING (ASSE)
901 Canterbury, Suite A
Westlake, OH 44145
Ph: 440-835-3040
Fax: 440-835-3488
E-mail: info@asse-plumbing.org
Internet: http://www.asse-plumbing.org

AMERICAN WATER WORKS ASSOCIATION(AWWA)
6666 West Quincy Avenue
Denver, CO 80235
Ph: 303-794-7711
Fax: 303-794-3951
Internet: http://www.awwa.org

AMERICAN WELDING SOCIETY (AWS)
550 N.W. LeJeune Road
Miami, FL 33126
Ph: 800-443-9353 - 305-443-9353
Fax: 305-443-7559
Internet: http://www.aws.org

AMERICAN WOOD-PRESERVERS' ASSOCIATION (AWPA)
P.O. Box 5690
Grandbury, TX 76049-0690
Ph: 817-326-6300
Fax: 817-326-6306
Internet: http://www.awpa.com

APA - THE ENGINEERED WOOD ASSOCIATION (APA)
P.O.Box 11700
Tacoma, WA 98411-0700
Ph: 253-565-6600
Fax: 253-565-7265
Internet: http://www.apawood.org

ARCHITECTURAL WOODWORK INSTITUTE (AWI)
1952 Isaac Newton Square West
Reston, VA 20190
Ph: 703-733-0600
Fax: 703-733-0584
Internet: http://www.awinet.org

ASBESTOS CEMENT PRODUCT PRODUCERS ASSOCIATION (ACPPA)
PMB114-1745 Jefferson Davis Highway
Arlington, VA 22202
Ph: 514-861-1153
Fax: 514-861-1152
Internet: www.asbestos-institute.ca

ASM INTERNATIONAL (ASM)
9639 Kinsman Road
Materials Park, OH 44073-0002
Ph: 440-338-5151
Fax: 440-338-4634
Internet: http://www.asm-intl.org

ASME INTERNATIONAL (ASME)
Three Park Avenue

New York, NY 10016-5990
Ph: 212-591-7722
Fax: 212-591-7674
Internet: http://www.asme.org

ASPHALT INSTITUTE (AI)
Research Park Dr.
P.O. Box 14052
Lexington, KY 40512-4052
Ph: 859-288-4960
Fax: 859-288-4999
Internet: http://www.asphaltinstitute.org

ASSOCIATED AIR BALANCE COUNCIL (AABC)
1518 K St., NW
Washington, DC 20005
Ph: 202-737-0202
Fax: 202-638-4833
Internet: http://www.aabchq.com
E-mail: aabchq@aol.com

ASSOCIATION FOR THE ADVANCEMENT OF MEDICAL INSTRUMENTATION (AAMI)
1110 N. Glebe Rd., Suite 220
Arlington, VA 22201-4795
Ph: 1-800-332-2264 or 703-525-4890
Fax: 703-276-0793
Internet: http://www.aami.org

ASSOCIATION OF EDISON ILLUMINATING COMPANIES (AEIC)
600 No. 18th St.
P.O. Box 2641
Birmingham, AL 35291
Ph: 205-257-2530
Fax: 205-257-2540
Internet: http://www.aeic.org

ASSOCIATION OF HOME APPLIANCE MANUFACTURERS (AHAM)
1111 19th St. NW., Suite 402
Washington, DC 20036
Ph: 202-872-5955
Fax: 202-872-9354
Internet: http://www.aham.org

ASSOCIATION OF THE WALL AND CEILING INDUSTRIES - INTERNATIONAL (AWCI)
803 West Broad Street
Falls Church, VA 22046
PH: 703-534-8300
FAX: 703-534-8307
Internet: http://www.awci.org

ASTM INTERNATIONAL (ASTM)

100 Barr Harbor Drive, PO Box C700
West Conshohocken, PA 19428-2959
Ph: 610-832-9500
Fax: 610-832-9555
Internet: http://www.astm.org

ALLIANCE FOR TELECOMMUNICATIONS INDUSTRY SOLUTIONS (ATIS)
1200 G Street NW, Suite 500
Washington, D.C. 20005
Ph: 202-628-6380
Fax: 202-393-5453
Internet: Unknown
E-mail: Unknown

BIFMA INTERNATIONAL (BIFMA)
2680 Horizon Drive SE, Suite A-1
Grand Rapids, MI 49546-7500
Ph: 616-285-3963
Fax: 616-285-3765
Internet: http://www.bifma.org
E-mail: email@bifma.org

BIOCYCLE, JOURNAL OF COMPOSTING AND RECYCLING (BIOCYCLE)
The JG Press Inc.
419 State Avenue
Emmaus PA. 18049
Ph: 610-967-4135
Internet: http://www.biocycle.net
E-mail: jgpress@jgpress.com

BRICK INDUSTRY ASSOCIATION (BIA)
11490 Commerce Park Dr.
Reston, VA 22091-1525
Ph: 703-620-0010
Fax: 703-620-3928
Internet: http://www.bia.org

BRITISH STANDARDS INSTITUTE (BSI)
389 Chiswick High Road
London W4 4AL
United Kingdom
Phone: +44 (0)20 8996 9000
Fax: +44 (0)20 8996 7001
Email: cservices@bsi-global.com
Website: http://www.bsi-global.com

BUILDERS HARDWARE MANUFACTURERS ASSOCIATION (BHMA)
355 Lexington Ave.
17th floor
New York, NY 10017
Ph: 212-297-2122

Fax: 212-370-9047
Internet: http://www.buildershardware.com

CARPET AND RUG INSTITUTE (CRI)

P.O. Box 2048
Dalton, GA 30722-2048
Ph: 1-800-882-8846 or 706-278-3176
Fax: 706-278-8835
Internet: http://www.carpet-rug.com

CAST IRON SOIL PIPE INSTITUTE (CISPI)
5959 Shallowford Rd., Suite 419
Chattanooga, TN 37421
Ph: 423-892-0137
Fax: 423-892-0817
Internet: http://www.cispi.org

CEILINGS & INTERIOR SYSTEMS CONSTRUCTION ASSOCIATION (CISCA)
1500 Lincoln Highway, Suite 202
St. Charles, IL 60174
Ph: 630-584-1919
Fax: 630-584-2003
Internet: http://www.cisca.org

CENTERS FOR DISEASE CONTROL AND PREVENTION (CDC)
1600 Clifton Road
Atlanta, GA 30333
PH: 404-639-3311

Internet: http://www.cdc.gov

CHEMICAL FABRICS & FILM ASSOCIATION (CFFA)
1300 Sumner Ave.
Cleveland OH 44115-2851
PH: 216-241-7333
FAX: 216-241-0105
Internet: http://www.chemicalfabricsandfilm.com/
OK 2/03

CHLORINE INSTITUTE (CI)
1300 Wilson Boulevard
Rosslyn, VA 22209
Ph: 703-741-5760
Fax: 703-741-6068
Internet: http://www.cl2.com

COMPRESSED AIR AND GAS INSTITUTE (CAGI)
1300 Sumner Ave.
Cleveland OH 44115-2851
PH: 216-241-7333
FAX: 216-241-0105

Internet: http://www.cagi.org/

COMPRESSED GAS ASSOCIATION (CGA)
4221 Walney Road, 5th Floor
Chantilly, VA 20151-2923
Ph: 703-788-2700
Fax: 703-961-1831
Internet: http://www.cganet.com
e-mail: cga@cganet.com

CONCRETE REINFORCING STEEL INSTITUTE (CRSI)
933 N. Plum Grove Rd.
Schaumburg, IL 60173-4758
Ph: 847-517-1200
Fax: 847-517-1206
Internet: http://www.crsi.org/

CONSUMER PRODUCT SAFETY COMMISSION (CPSC)
4330 East-West Highway
Bethesda, MD 20814-4408
Ph: 301-504-6816
Fx: 301-504-0124 and 301-504-0025
Internet: http://www.cpsc.gov

CONVEYOR EQUIPMENT MANUFACTURERS ASSOCIATION (CEMA)
6724 Lone Oak Blvd.
Naples, FL 34109
Ph: 239-514-3441
Fax: 239-514-3470
Internet: http://www.cemanet.org

COOLING TECHNOLOGY INSTITUTE (CTI)
2611 FM 1960 West
Suite H-200
Houston, TX 77068-3730
Ph: 281-583-4087
Fax: 281-537-1721
Internet: http://www.cti.org

COPPER DEVELOPMENT ASSOCIATION (CDA)
260 Madison Ave.
New York, NY 10016
Ph: 212-251-7200
Fax: 212-251-7234
Internet: http://www.copper.org
E-mail: staff@cda.copper.org

CRANE MANUFACTURERS ASSOCIATION OF AMERICA (CMAA)
8720 Red Oak Blvd., Ste, 201
Charlotte, NC 28217
Ph: 704-676-1190 or 800-722-6832
Fx: 704-676-1199

Internet: http://www.mhia.org/psc/psc_products_cranes.cfm

DISTRICT OF COLUMBIA MUNICIPAL REGULATIONS (DCMR)
441 4th Street NW, Suite 520
Washington DC 20001
PH: 202-727-5090
Internet: http://www.abfa.com/dcdocs/dcmrlist.htm

DOOR AND ACCESS SYSTEM MANUFACTURERS ASSOCIATION (DASMA)
1300 Sumner Avenue
Cleveland, OH 44115-2851
Ph: 216-241-7333
Fax: 216-241-0105
Internet: http://www.dasma.com
e-mail: dasma@dasma.com

DOOR AND HARDWARE INSTITUTE (DHI)
14150 Newbrook Dr.Suite 200
Chantilly, VA 20151-2223
Ph: 703-222-2010
Fax: 703-222-2410
Internet: http://www.dhi.org
e-mail: info@dhi.org

DUCTILE IRON PIPE RESEARCH ASSOCIATION (DIPRA)
245 Riverchase Parkway East, Suite O
Birmingham, AL 35244
Ph: 205-402-8700
Fax: 205-402-8730
Internet: http://www.dipra.org
E-mail: info@dipra.org

EIFS INDUSTRY MEMBERS ASSOCIATION (EIMA)
3000 Corporate Center Drive, Suite 270
Morrow, GA 30260
Ph: 800-294-3462
Fax: 770-968-5818
Internet: http://www.eima.com

ELECTRICAL GENERATING SYSTEMS ASSOCIATION (EGSA)
1650 South Dixie Highway, Ste. 500
Boca Raton, FL 33432-7462
Ph: 561-750-5575
Fax: 561-395-8557
Internet: http://www.egsa.org

ELECTRONIC INDUSTRIES ALLIANCE (EIA)
2500 Wilson Blvd.
Arlington, VA 22201-3834
Ph: 703-907-7500
Fax: 703-907-7501
Internet: http://www.eia.org

ENERGY RESEARCH AND DEVELOPMENT ADMINISTRATION (ERDA)
Organization abolished by Dept of Energy Act
(91 Stat 577)4 Aug 1977
Successor Organization is Department of Energy
Forrestal 4B-222
Washington, DC, 202-586-4716
PH: 202-586-4716
FAX: 202-586-1972
Internet: http://www.directives.doe.gov/

ENGINE MANUFACTURERS ASSOCIATION (EMA)
Two North LaSalle Street, Suite 2200
Chicago, Il 60602
PH: 312-827-8700
FAX: 312-827-8737
Internet: http://www.engine-manufacturers.org/

ETL TESTING LABORATORIES (ETL)
Intertek Testing Services, ETL SEMKO
70 Codman Hill Road
Boxborough, MA 01719
PH: 978-263-2662
FAX: 978-263-7086
Internet: http://www.etlsemko.com
E-mail: info@etlsemko.com

EXPANSION JOINT MANUFACTURERS ASSOCIATION (EJMA)
25 N Broadway
Tarrytown, NY 10591
Ph: 914-332-0040
Fax: 914-332-1541
Internet: http://www.ejma.org

FM GLOBAL (FM)
1301 Atwood Avenue
P.O. Box 7500
Johnston, RI 02919
Ph: 401-275-3000
Fax: 401-275-3029
Internet: http://www.fmglobal.com

FLUID SEALING ASSOCIATION (FSA)
994 Old Eagle School Road #1019
Wayne, PA 19087
PH: 610-971-4850
FAX: 610-9971-4859
Internet: http://www.fluidsealing.com
E-mail: info@fluidsealing.com

FORESTRY SUPPLIERS (FSUP)
205 West Rankin St.

P.O. Box 8397
Jackson, MS 39284-8397
Ph: 601-354-3565
Fax: 601-292-0165
Internet: http://www.forestry-suppliers.com

FOUNDATION FOR CROSS-CONNECTION CONTROL AND HYDRAULIC RESEARCH (FCCCHR)
University of South California
Kaprielian Hall 200
Los Angeles, CA 90089-2531
Ph: 213-740-2032
Fax: 213-740-8399
Internet: http://www.usc.edu/dept/fccchr

GEOLOGICAL SOCIETY OF AMERICA (GSA)
P.O. Box 9140
Boulder, CO 80301-9140
Ph: 303-447-2020
Fax: 303-357-1070
Internet: http://www.geosociety.org

GEOSYNTHETIC INSTITUTE (GSI)
475 Kedron Ave.
Folsom, PA 19033
Ph: 610-522-8440
Fax: 610-522-8441
Internet: http://www.geosynthetic-institute.org

GLASS ASSOCIATION OF NORTH AMERICA (GANA)
2945 SW Wanamaker Drive, Suite A
Topeka, KS 66614
Ph: 785-271-0208
Fax: 785-271-0166
Internet: http://www.glasswebsite.com/GANA

GYPSUM ASSOCIATION (GA)
810 First St. NE, Suite 510
Washington, DC 20002
Ph: 202-289-5440
Fax: 202-289-3707
Internet: http://www.gypsum.org

HARDWOOD PLYWOOD & VENEER ASSOCIATION (HPVA)

P.O. Box 2789
Reston, VA 20195-0789
Ph: 703-435-2900
Fax: 703-435-2537
Internet: http://www.hpva.org

HEAT EXCHANGE INSTITUTE (HEI)
1300 Sumner Ave
Cleveland, OH 44115-2851
Ph: 216-241-7333
Fax: 216-241-0105
Internet: http://www.heatexchange.org
email: hei@heatexchange.org

HOIST MANUFACTURERS INSTITUTE (HMI)
8720 Red Oak Blvd., Suite 201
Charlotte, NC 28217
PH: 704-676-1190
FAX: 704-676-1199
Internet: http://www.mhia.org/psc/PSC_Products_Hoists.cfm

H.P. WHITE LABORATORY (HPW)
3114 Scarboro Rd.
Street, MD 21154
Ph: 410-838-6550
fax: 410-838-2802
Internet: http://www.hpwhite.com

HYDRAULIC INSTITUTE (HI)
9 Sylvan Way
Parsippany, NJ 07054-3802
Ph: 973-267-9700
Fax: 973-267-9055
Internet: http://www.pumps.org

HYDRONICS INSTITUTE DIVISION OF GAMA (HYI)
35 Russo Pl.
P.O. Box 218
Berkeley Heights, NJ 07922-0218
Ph: 908-464-8200
Fax: 908-464-7818
Internet: http://www.gamanet.org/publist/hydroordr.htm

IBM CORPORATION (IBM)
Publications
4800 Falls of the Neuse
Raleigh, NC 27609
Ph: 800-879-2755, Option 1
Fax: 800-445-9269
Internet: http://www.ibm.com/shop/publications/order

ILLUMINATING ENGINEERING SOCIETY OF NORTH AMERICA (IESNA)
120 Wall St., 17th Floor
New York, NY 10005
Ph: 212-248-5000
Fax: 212-248-5017
Internet: http://www.iesna.org

INDUSTRIAL FASTENERS INSTITUTE (IFI)
1717 East 9th St., Suite 1105
Cleveland, OH 44114-2879
Ph: 216-241-1482
Fax: 216-241-5901
Internet: http://www.industrial-fasteners.org
e-mail: indfast@aol.com

INSECT SCREENING WEAVERS ASSOCIATION (ISWA)
DEFUNCT in 1997

INSTITUTE OF CLEAN AIR COMPANIES (ICAC)
1660 L St., NW, Suite 1100
Washington, DC 20036-5603
Ph: 202-457-0911
Fax: 202-331-1388
E-mail: jsmith@icac.com
Internet: http://icac.com

INSTITUTE OF ELECTRICAL AND ELECTRONICS ENGINEERS (IEEE)
445 Hoes Ln
Piscataway, NJ 08855-1331
Ph: 732-981-0060
Fax: 732-981-1712
Internet: http://www.ieee.org
E-mail: customer.services@ieee.org

INSTITUTE OF ENVIRONMENTAL SCIENCES AND TECHNOLOGY (IEST)
5005 Newport Drive, Suite 566
Rolling Meadows, IL 60008-3841
Ph: 847-255-1561
Fax: 847-255-1699
Internet: http://www.iest.org

INSULATED CABLE ENGINEERS ASSOCIATION (ICEA)
P.O. Box 1568
Carrollton, GA 30112
Ph: 770-830-0369
Fax: 770-830-8501

Internet: http://www.icea.net

INSULATING GLASS MANUFACTURERS ALLIANCE (IGMA)
27 Goulburn Avenue
Ottawa, Ontario. CANADA
K1N 8C7
Phone: 613-233-1510
Fax: 613-233-1929
e-mail: info@igmaonline.org
Internet: http://www.igmaonline.org

CANADIAN STANDARDS ASSOCIATION(CSA)
8501 East Pleasant Valley Rd.
Cleveland, OH 44131
Ph: 216-524-4990
Fax: 216-328-8118
Internet: http://www.csa-international.org

INTERNATIONAL CODE COUNCIL (ICC)
5203 Leesburg Pike, Suite 600
Falls Church, VA 22041
Ph: 703-931-4533
Fax: 703-379-1546
Internet: http://www.intlcode.org

INTERNATIONAL CONCRETE REPAIR INSTITUTE (ICRI)
3166 S. River Road, Suite 132
Des Planies, IL 60018
Ph: 847-827-0830
Pax: 847-827-0832
Internet: http://www.icri.org

INTERNATIONAL CONFERENCE OF BUILDING OFFICIALS (ICBO)
5360 Workman Mill Rd.
Whittier, CA 90601-2298
Ph: 800-284-4406
Ph: 562-699-0541
Fax: 562-692-3853
Internet: http://www.icbo.org

INTERNATIONAL ELECTRICAL TESTING ASSOCIATION (NETA)
P.O. Box 687
106 Stone Street
Morrison, Colorado 80465
PH: 303-697-8441
FAX: 303-697-8431
Internet: http://www.netaworld.org

INTERNATIONAL ELECTROTECHNICAL COMMISSION (IEC)
3, rue de Varembe, P.O. Box 131
CH-1211 Geneva 20, Switzerland
Ph: 41-22-919-0211
Fax: 41-22-919-0300
Internet: http://www.iec.ch
e-mail: info@iec.ch

INTERNATIONAL GROUND SOURCE HEAT PUMP ASSOCIATION (IGSHPA)
Oklahoma State University
499 Cordell South
Stillwater OK 74078-8018
PH: 800-626-4747; 405-744-5175
FAX: 405-744-5283
Internet: http://www.igshpa.okstate.edu/

INTERNATIONAL INSTITUTE OF AMMONIA REFRIGERATION (IIAR)
1110 N. Glebe Rd., Suite 250
Arlington, VA 22201
Ph: 703-312-4200
Fax: 703-312-0065
Internet: http://www.iiar.org
e-mail: iiar@iiar.org

INTERNATIONAL MUNICIPAL SIGNAL ASSOCIATION (IMSA)
P.O. Box 539
165 East Union St.
Newark, NY 14513-0539
Ph: 315-331-2182
Ph: 800-723-4672
Fax: 315-331-8205
Internet: http://www.imsasafety.org/

INTERNATIONAL ORGANIZATION FOR STANDARDIZATION (ISO)
1, rue de Varembe'
Case Postale 56
CH-1211 Geneve 20 Switzerland
Ph: 41-22-749-0111
Fax: 41-22-733-3430
Internet: http://www.iso.ch
e-mail: central@iso.ch

INTERNATIONAL SLURRY SURFACING ASSOCIATION (ISSA)
3 Church Circle, PMB 250
Annapolis, MD 21401
Ph: 410-267-0023
Fax: 410-267-7546
Internet: http://www.slurry.org
e-mail: krissoff@slurry.org

INTERNATIONAL TELECOMMUNICATION UNION (ITU)
Order from:
U.S. Dept of Commerce
National Technical Information Service
5285 Port Royal Road.
Springfield, VA 22161
Ph: 703-605-6040
FAX: 703-605-6887
Internet: http://www.ntis.gov

For documents not avail from Dept of Commerce:
Sales Service
International Telecommunication Union
Place des Nations
CH-1211 Geneve 20
Switzerland
E-Mail: itumail@itu.int
Ph: 41.22.730.5111
Fax: 41.22.730.6500
Internet: http://www.itu.org

IPC - ASSOCIATION CONNECTING ELECTRONICS INDUSTRIES (IPC)
2215 Sanders Rd.
Northbrook, IL 60062-6135
Ph: 847-509-9700
Fax: 847-509-9798
Internet: http://www.ipc.org
e-mail: info@ipc.org

IRON & STEEL SOCIETY (ISS)
186 Thorn Hill Road
Warrendale, PA 15086-7528
Ph: 724-776-1535 Ext 1
Fax: 724-776-0430
E-Mail: mailbag@issource.org
Internet: http://www.issource.org

ISA - THE INSTRUMENTATION, SYSTEMS AND AUTOMATION SOCIETY (ISA)
67 Alexander Drive
P.O. Box 12277
Research Triangle Park, NC 27709
Ph: 919-549-8411
Fax: 919-549-8288
e-mail: info@isa.org
Internet: http://www.isa.org

KITCHEN CABINET MANUFACTURERS ASSOCIATION (KCMA)
1899 Preston White Dr.
Reston, VA 20191-5435
Ph: 703-264-1690
Fax: 703-620-6530
Internet: http://www.kcma.org

L.H. BAILEY HORTORIUM (LHBH)
Dept of Plant Biology
c/o Cornell University
228 Plant Science Building
Ithaca, NY 14853
PH: 607-255-4477
Internet: http://www.plantbio.cornell.edu/Hort.php

MANUFACTURERS STANDARDIZATION SOCIETY OF THE VALVE AND FITTINGS INDUSTRY (MSS)
127 Park St., NE
Vienna, VA 22180-4602
Ph: 703-281-6613
Fax: 703-281-6671
Internet: htp://www.mss-hq.com
e-mail: info@mss-hq.com

MAPLE FLOORING MANUFACTURERS ASSOCIATION (MFMA)
60 Revere Dr., Suite 500

Northbrook, IL 60062
Ph: 847-480-9138
Fax: 847-480-9282
Internet: http://www.maplefloor.org

MARBLE INSTITUTE OF AMERICA (MIA)
28901 Clemens Road, Suite 100
Westlake, OH 44145
Ph: 440-250-9222
Fax: 440-250-9223
Internet: http://www.marble-institute.com
e-mail: info@marble-institute.com

MASTER PAINTERS INSTITUTE (MPI)
4090 Graveley Street
Burnaby, BC CANADA V5C 3T6
PH: 888-674-8937
Fx: 888-211-8708
Internet: http://www.paintinfo.com/mpi

METAL BUILDING MANUFACTURERS ASSOCIATION (MBMA)
1300 Sumner Ave.
Cleveland, OH 44115-2851
Ph: 216-241-7333
Fax: 216-241-0105
Internet: http://www.mbma.com
e-mail: mbma@mbma.com

MIDWEST INSULATION CONTRACTORS ASSOCIATION (MICA)
2017 So. 139th Cir.
Omaha, NE 68144-2149
Ph: 800-747-6422
Fax: 402-330-9702
Internet: http://www.micainsulation.org
e-mail: info@micainsulation.org

MONORAIL MANUFACTURERS ASSOCIATION (MMA)
8720 Red Oak Blvd., Suite 201
Charlotte, NC 28217
PH: 704-676-1190
FAX: 704-676-1199
Internet: http://www.mhia.org/mma

NACE INTERNATIONAL (NACE)
1440 South Creek Drive
Houston, TX 77084-4906
Ph: 281-228-6200
Fax: 281-228-6300
Internet: http://www.nace.org

NATIONAL ASSOCIATION OF ARCHITECTURAL METAL MANUFACTURERS (NAAMM)
8 S. Michigan Ave, Suite 1000

Chicago, IL 60603
Ph: 312-322-0405
Fax: 312-332-0706
Internet: http://www.naamm.org
e-mail: naamm@gss.net

NATIONAL BOARD OF BOILER AND PRESSURE VESSEL INSPECTORS (NBBPVI)
1055 Crupper Ave.
Columbus, OH 43229-1183
Ph: 614-888-8320
Fax: 614-847-1147
Internet: http://www.nationalboard.org
e-mail: tbecker@nationalboard.org

NATIONAL CABLE TELECOMMUNICATIONS ASSOCIATION (NCTA)
1724 Massachusetts Ave. NW
Washington, DC 20036-1969
Ph: 202-775-3550
Fax: 202-775-1055
Internet: http://www.ncta.com

NATIONAL CONCRETE MASONRY ASSOCIATION (NCMA)
13750 Sunrise Valley Drive
Herndon, VA 20171
Ph: 703-713-1900
Fax: 703-713-1910
Internet: http://www.ncma.org

NATIONAL COUNCIL ON RADIATION PROTECTION AND MEASUREMENTS (NCRP)
7910 Woodmont Ave., Suite 800
Bethesda, MD 20814-3095
Ph: 800-229-2652
Ph. 301-657-2652
Fax: 301-907-8768
Internet: http://www.ncrp.com

NATIONAL DRILLING ASSOCIATION (NDA)
10901D Roosevelt Boulevard North, Suite 100
St. Petersburg, FL 33716
Ph: 727-577-5006
FAX: 727-577-5012
Internet: http://www.nda4u.com/
E-mail: info@nda4u.com

NATIONAL ELECTRICAL MANUFACTURERS ASSOCIATION (NEMA)
1300 N. 17th St., Suite 1847
Rosslyn, VA 22209
Ph: 703-841-3200
Fax: 703-841-3300
Internet: http://www.nema.org/
E-mail: jas_peak@nema.org

NATIONAL ENVIRONMENTAL BALANCING BUREAU (NEBB)
8575 Grovemont Circle
Gaithersburg, MD 20877-4121
Ph: 301-977-3698
Fax: 301-977-9589
Internet: http://www.nebb.org

NATIONAL FENESTRATION RATING COUNCIL (NFRC)
1300 Spring Street, Suite 500
Silver Spring, MD 20910
Ph: 301-589-6372
Fax: 303-588-6342
Internet: http://www.nfrc.org
E-Mail: nfrcusa@aol.com or info@nfrc.com

NATIONAL FIRE PROTECTION ASSOCIATION (NFPA)
1 Batterymarch Park
P.O. Box 9101
Quincy, MA 02269-9101
Ph: 617-770-3000
Fax: 617-770-0700
Internet: http://www.nfpa.org

NATIONAL FLUID POWER ASSOCIATION (NFLPA)
3333 N. Mayfair Rd.
Milwaukee, WI 53222-3219
Ph: 414-778-3344
Fax: 414-778-3361
Internet: http://www.nfpa.com
E-mail: nfpa@nfpa.com

NATIONAL HARDWOOD LUMBER ASSOCIATION (NHLA)
6830 Raleigh LaGrange Road
P.O. Box 34518
Memphis, TN 38184-0518
Ph: 901-377-1818
Fax: 901-382-6419
e-mail: info@natlhardwood.org
Internet: http://www.natlhardwood.org

NATIONAL INSTITUTE FOR CERTIFICATION IN ENGINEERING TECHNOLOGIES (NICET)
1420 King Street
Alexandria, VA 22314-2794
Ph: 888-476-4238
Internet: http://www.nicet.org

NATIONAL INSTITUTE FOR OCCUPATIONAL SAFETY AND HEALTH (NIOSH)
Mail Stop C-13
4676 Columbia Parkway
Cincinnati, OH 45226-1998
Ph: 800-356-4674
Fx: 513-533-8573

Internet: http://www.cdc.gov/niosh/homepage.html
To order pubs for which a fee is charged, order from:
Superintendent of Documents
U.S. Government Printing Office
732 North Capitol Street, NW
Mailstop: SDE
Washington, DC 20401
Ph: 866-512-2800 or 202-512-1800
Fax: 202-512-2250
Internet: http://www.gpo.gov

NATIONAL INSTITUTE OF JUSTICE (NIJ)
National Law Enforcement and Corrections Technology Center
2277 Research Blvd. - Mailstop 1E
Rockville, MD 20850
Ph: 800-248-2742 or 301-519-5060
Fax: 301-519-5149
Internet: http://www.nlectc.org
e-mail: asknlectc@nlectc.org

NATIONAL INSTITUTE OF STANDARDS AND TECHNOLOGY (NIST)
100 Bureau Drive
Stop 3460
Gaithersburg, MD 20899-3460
Ph: 301-975-NIST
Internet: http://www.nist.gov
Order Publications From:
Superintendent of Documents
U.S. Government Printing Office
732 North Capitol Street, NW
Mailstop: SDE
Washington, DC 20401
Ph: 866-512-1800 or 202-512-1800
Fax: 202-512-2250
Internet: http://www.gpo.gov
or
National Technical Information Services (NTIS)
5285 Port Royal Rd.
Springfield, VA 22161
Ph: 703-605-6000
Fax: 703-605-6900
Internet: http://www.ntis.gov

NATIONAL LIME ASSOCIATION (NLA)
200 North Glebe Road, Suite 800
Arlington, VA 22203
PH: 703-243-5463
FAX: 703-243-5489
Internet: http://www.lime.org

NATIONAL OAK FLOORING MANUFACTURERS ASSOCIATION (NOFMA)
P.O. Box 3009
Memphis, TN 38173-0009
Ph: 901-526-5016
Fax: 901-526-7022

Internet: http://www.nofma.org

NATIONAL READY-MIXED CONCRETE ASSOCIATION (NRMCA)
900 Spring St.
Silver Spring, MD 20910
Ph: 301-587-1400
Fax: 301-585-4219
Internet: http://www.nrmca.org

NATIONAL ROOFING CONTRACTORS ASSOCIATION (NRCA)
10255 W. higgins Rd., Suite 600
Rosemont, IL 60018
Ph: 847-299-9070
Fax: 847-299-1183
Internet: http://www.nrca.net

NATIONAL TERRAZZO & MOSAIC ASSOCIATION (NTMA)
110 East Market St., Suite 200 A
Leesburg, Virginia 20176
Ph: 703-779-1022 or 800-323-9736
Fax: 703-779-1026
Internet: http://www.ntma.com
e-mail: info@ntma.com

NATURAL RESOURCE, AGRICULTURAL AND ENGINEERING SERVICE (NRAES)
Cooperative Extension
152 Riley-Robb Hall
Ithaca, NY 14853-5701
Ph: 607-255-7654
Fax: 607-254-8770
Internet: http://www.nraes.org
E-mail: nraes@cornell.edu

NORTH AMERICAN INSULATION MANUFACTURERS ASSOCIATION (NAIMA)
44 Canal Center Plaza, Suite 310
Alexandria, VA 22314
Ph: 703-684-0084
Fax: 703-684-0427
Internet: http://www.naima.org
e-mail: insulation@naima.org

NORTHEASTERN LUMBER MANUFACTURERS ASSOCIATION (NELMA)
272 Tuttle Road
P.O. Box 87A
Cumberland Center, ME 04021
Ph: 207-829-6901
Fax: 207-829-4293
Internet: http://www.nelma.org
e-mail: info@nelma.org

NSF INTERNATIONAL (NSF)
ATTN: Publications

789 North Dixboro Rd.
P.O. Box 130140
Ann Arbor, MI 48113-0140
Ph: 734-769-8010
Fax: 734-769-0109
Toll Free: 800-NSF-MARK
Internet: http://www.nsf.org

PIPE FABRICATION INSTITUTE (PFI)
655 32nd Avenue, Suite 201
Lachine, QC, Canada H8T 3G6
Ph: 514-634-3434
Fax: 514-634-9736
Internet: http://www.pfi-institute.org
e-mail: pfi@pfi-institute.org

PLASTIC PIPE AND FITTINGS ASSOCIATION (PPFA)
800 Roosevelt Rd., Bldg C, Suite 20
Glen Ellyn, IL 60137
Ph: 630-858-6540
Fax: 630-790-3095
Internet: http://www.ppfahome.org

PLASTICS PIPE INSTITUTE (PPI)
1825 Connecticut Ave. NW
Washington, D. C. 20009
Ph: 202-462-9607
Fax: 202-462-9779
Internet: http://www.plasticpipe.org

PLUMBING AND DRAINAGE INSTITUTE (PDI)
45 Bristol Dr.
South Easton, MA 02375
Ph: 508-230-3516 or 800-589-8956
Fax: 508-230-3529
Internet: http://www.pdionline.org
E-Mail: info@pdionline.org

PLUMBING AND MECHANICAL CONTRACTORS ASSOCIATION (PMCA)
9450 SW Commerce Circle, Suite 310
Wilsonville, OR 97070-9626
Ph: 503-682-7919
Fax: 503-682-6241
Internet: http://www.pmcaoregon.com/

PLUMBING-HEATING-COOLING CONTRACTORS NATIONAL ASSOCIATION (PHCC)
180 S. Washington Street
P.O. Box 6808
Falls Church, VA 22040
Ph: 800-533-7694
Fax: 703-237-7442
Internet: http://www.phccweb.org

PORCELAIN ENAMEL INSTITUTE (PEI)
5696 Peachtree Parkway, PO Box 920220
Norcross, GA 30092
Ph: 770-242-2632
Fax: 770-446-1452
Internet: http://www.porcelainenamel.com
e-mail: penamel@aol.com

POST-TENSIONING INSTITUTE (PTI)
1717 West Northern Avenue, Suite 114
Phoenix, AZ 85021
Ph: 602-870-7540
Fax: 602-870-7541
Internet: http://www.post-tensioning.org/

PRECAST/PRESTRESSED CONCRETE INSTITUTE (PCI)
209 West Jackson Blvd.
Chicago, IL 60606-6938
Ph: 312-786-0300
Fax: 312-786-0353
Internet: http://www.pci.org
e-mail: info@pci.org

REDWOOD INSPECTION SERVICE (RIS)
405 Efrente Drive, Suite 200
Novato, CA 94949
Ph: 415-382-0662
Fax: 415-382-8531
Internet: http://www.calredwood.org
E-Mail: cjjourdain@worldnet.att.net

RUBBER MANUFACTURERS ASSOCIATION (RMA)
1400 K St., NW, Suite 900
Washington, DC 20005
Ph: 202-682-4846
Fax: 202-682-4854
Internet: http://www.rma.org
Order Publications from:
The Mail Room
P. O. Box 3147
Medina, OH 44258
Ph: 800-325-5095 EXT 242 or 330-723-2978
Fax: 330-725-0576

SCIENTIFIC CERTIFICATION SYSTEMS (SCS)
1939 Harrison Street, Suite 400
Oakland, CA 94612
Ph: 510-832-1415
FAX: 510-832-0359
Internet: http://www.scs1.com

SCREEN MANUFACTURERS ASSOCIATION (SMA)
2850 South Ocean Boulevard, Suite 114
Palm Beach, FL 33480-5535
Ph: 561-533-0991
Fax: 561-533-7466
e-mail: fitzgeraldfscott@aol.com
Internet: http://www.smacentral.org

SEMICONDUCTOR EQUIPMENT AND MATERIALS INTERNATIONAL (SEMI)
3081 Zanker Road
San Jose, CA 95134
Phone: 1.408.943.6900
Fax: 1.408.428.9600
Internet: http://www.semi.org
E-mail: semihq@semi.org

SHEET METAL & AIR CONDITIONING CONTRACTORS' NATIONAL ASSOCIATION (SMACNA)
4201 Lafayette Center Dr.,
Chantilly, VA 20151-1209
Ph: 703-803-2980
Fax: 703-803-3732
Internet: http://www.smacna.org
e-mail: info@smacna.org

SPRI (SPRI)
200 Reservoir St., Suite 309A
Needham, MA 02494
Ph: 781-444-0242
Fax: 781-444-6111
Internet: http://www.spri.org
e-mail: spri@spri.org

SOCIETY OF AUTOMOTIVE ENGINEERS INTERNATIONAL (SAE)
400 Commonwealth Dr.
Warrendale, PA 15096-0001
Ph: 724-776-4841
Fax: 724-776-5760
Internet: http://www.sae.org
e-mail: custsvc@sae.org

SOCIETY OF MOTION PICTURE & TELEVISION ENGINEERS (SMPTE)
595 West Hartsdale Avenue
WhitePlains, New York 10607
PH: 914-761-1100
FAX: 914-761-3115
Internet: http://www.smpte.org

SPRAY POLYURETHANE FOAM ALLIANCE (SPFA)
American Plastics Council
1300 Wilson Boulevard, Suite 800
Arlington Virginia 22209

PH: 800-523-6154
FX: 703-252-0664
E-mail: feedback@sprayfoam.org
Internet: http://www.sprayfoam.org

SOLAR RATING AND CERTIFICATION CORPORATION (SRCC)
c/o FSEC, 1679 Clearlake Road
Cocoa, FL 32922-5703
PH: 321-638-1537
FAX: 321-638-1010
Internet: http://www.solar-rating.org

SOUTHERN CYPRESS MANUFACTURERS ASSOCIATION (SCMA)
400 Penn Center Boulevard, Suite 530
Pittsburgh, PA 15235
Ph: 412-829-0770
Fax: 412-829-0844
Internet: http://www.cypressinfo.org

SOUTHERN PINE INSPECTION BUREAU (SPIB)
4709 Scenic Highway
Pensacola, FL 32504-9094
Ph: 850-434-2611
Fax: 850-433-5594
e-mail: spib@spib.org
Internet: http://www.spib.org

STATE OF CALIFORNIA DEPARTMENT OF FOOD AND AGRICULTURE (CDFA)
Plant Health and Pest Prevention Services
Pest Exclusion Branch/Nursery, Seed and Cotton Program
1220 N Street, Room A-372
Sacramento CA 95814
PH: 916-653-0435
Internet: http://www.cdfa.ca.gov/phpps/nipm.htm

STATE OF CALIFORNIA DEPARTMENT OF TRANSPORTATION (CDT)
Publication Distribution Unit
1900 Royal Oaks Dr.
Sacramento, CA 95815
Ph: 916-445-3520 or 916-227-7000 (CA Transportation Lab)
Fax: 916-324-8997
Internet: http://www.dot.ca.gov

STATE OF MARYLAND CODE OF MARYLAND REGULATIONS (COMAR)
1700 Margaret Avenue
Annapolis, MD 21401
phone: 410-974-2486
fax: 410-974-2546
Internet: http://www.sos.state.md.us/sos/dsd/comar/html/comar.html

STATE OF NORTH CAROLINA ADMINISTRATIVE CODE (NCAC)
Internet: http://ncrules.state/nc.us

STATE OF VIRGINIA ADMINISTRATIVE CODE (VAC)
Virginia Code Commission
General Assembly Building, 2nd Floor
910 Capitol Street
Richmond, Virginia 23219
Phone: 804-786-3591
Fax: 804-692-0625
Internet: http://legis.state.va.us/statutesandregulations/admincode.htm

STEEL DECK INSTITUTE (SDI)
P.O. Box 25
Fox River Grove, IL 60021-0025
Ph: 847-462-1930
Fax: 847-462-1940
Internet: http://www.sdi.org
e-mail: Steve@sdi.org

STEEL DOOR INSTITUTE (SDI)
30200 Detroit Rd.
Cleveland, OH 44145-1967
Ph: 440-899-0010
Fax: 440-892-1404
Internet: http://www.steeldoor.org

STEEL JOIST INSTITUTE (SJI)
3127 Tenth Ave., North Ext.
Myrtle Beach, SC 29577-6760
Ph: 843-626-1995
Fax: 843-626-5565
Internet: http://www.steeljoist.org

STEEL TANK INSTITUTE (STI)
570 Oakwood Rd.
Lake Zurich, IL 60047
Ph: 847-438-8265
Fax: 847-438-8766
Internet: http://www.steeltank.com

STEEL WINDOW INSTITUTE (SWI)
1300 Sumner Ave.
Cleveland, OH 44115-2851
Ph: 216-241-7333
Fax: 216-241-0105
Internet: http://www.steelwindows.com

TECHNICAL ASSOCIATION OF THE PULP AND PAPER INDUSTRY (TAPPI)
P.O. Box 105113
Atlanta, GA 30348-5113
PH: 800-322-8686
FAX: 770-446-6947
Internet: http://www.tappi.org

THE SOCIETY FOR PROTECTIVE COATINGS (SSPC)
40 24th Street, 6th Floor
Pittsburgh, PA 15222-4656
Ph: 412-281-2331
Fax: 412-281-9992
Internet: http://www.sspc.org

TILE COUNCIL OF AMERICA (TCA)
100 Clemson Research Blvd
Anderson, SC 29625
Ph: 864-646-8453
FAX: 864-646-2821
Internet: http://www.tileusa.com
e-mail: literature@tileusa.com

TRUSS PLATE INSTITUTE (TPI)
583 D'Onofrio Dr., Suite 200
Madison, WI 53719
Ph: 608-833-5900
Fax: 608-833-4360
Internet: http://www.tpinst.org

TUBULAR EXCHANGER MANUFACTURERS ASSOCIATION (TEMA)
25 N. Broadway
Tarrytown, NY 10591
Ph: 914-332-0040
Fax: 914-332-1541
Internet: http://www.tema.org

TURFGRASS PRODUCERS INTERNATIONAL (TPI)
1855-A Hicks Road
Rolling Meadows, IL 60008
PH: 800-405-8873
FAX: 847-705-8347
Internet: http://www.turfgrasssod.org

UNDERWRITERS LABORATORIES (UL)
333 Pfingsten Rd.
Northbrook, IL 60062-2096
Ph: 847-272-8800
Fax: 847-272-8129
Internet: http://www.ul.com/
e-mail: northbrook@us.ul.com

UNI-BELL PVC PIPE ASSOCIATION (UBPPA)
2655 Villa Creek Dr., Suite 155
Dallas, TX 75234
Ph: 214-243-3902
Fax: 214-243-3907
Internet: http://www.uni-bell.org
e-mail: info@uni-bell.org

UNIVERSITY OF CALIFORNIA DIVISION OF AGRICULTURE AND NATURAL RESOURCES (UCDANR)
FRANKLIN BUILDING
1111 Franklin St., 6th floor
Oakland, CA 94607-5200
Internet: http://http://www.ucanr.org

U.S. AIR FORCE (USAF)
Air Force Publishing Distribution Center
Ph: 410-687-3330
E-mail: afpdc-service@pentagon.af.mil
Internet: http://www.e-publishing.af.mil/

U.S. ARMY (DA)
U.S. Army Publications Agency
Internet: http://www.usapa.army.mil/
AOK: 4/02
LOK: 7/02

U.S. ARMY CENTER FOR HEALTH PROMOTION AND PREVENTIVE MEDICINE (USACHPPM)
5158 Blackhawk Road
Aberdeen Proving Ground
MD 21010-5403
PH: 800-222-9698; website
Internet: http://chppm-www.apgea.army.mil

U.S. ARMY CORPS OF ENGINEERS (USACE)
Order CRD-C DOCUMENTS from:
U.S. Army Engineer Waterways Experiment Station
ATTN: Technical Report Distribution Section, Services Branch, TIC
3909 Halls Ferry Rd.
Vicksburg, MS 39180-6199
Ph: 601-634-2664
Fax: 601-634-2388
Internet: http://www.wes.army.mil/SL/MTC/handbook/handbook.htm

Order Other Documents from:
USACE Publications Depot
Attn: CEIM-SP-D
2803 52nd Avenue
Hyattsville, MD 20781-1102
Ph: 301-394-0081
Fax: 301-394-0084
Internet: http://www.usace.army.mil/publications
or http://www.hnd.usace.army.mil/techinfo/index.htm

U.S. ARMY EDGEWOOD RESEARCH, DEVELOPMENT, AND ENGINEERING CENTER (EA)
Aberdeen Proving Ground, MD
Internet: Unknown

U.S. ARMY ENVIRONMENTAL CENTER (AEC)
5179 Hoadley Road
Aberdeen Proving Ground, MD 21010-5401
Internet: http://aec.army.mil
Order from:
National Technical Information Services (NTIS)
5285 Port Royal Rd.
Springfield, VA 22161
Ph: 703-605-6000
Fax: 703-605-6900
Internet: http://www.ntis.gov

U.S. BUREAU OF RECLAMATION (BOR)
Denver Federal Center
P.O. Box 25007
Denver, CO 80225
Ph: 303-445-2080
Internet: http://www.usbr.gov
Order from:
National Technical Information
Services (NTIS)
5285 Port Royal Rd.
Springfield, VA 22161
Ph: 703-605-6000
Fax: 703-605-6900
Internet: http://www.ntis.gov

U.S. DEFENSE INTELLIGENCE AGENCY (DIA)
Defense Intelligence Analysis Center (DIAC)
MacDill Boulevard and Luke Avenue
Bolling AFB, MD
Internet: http://www.dia.mil

U.S. DEFENSE LOGISTICS AGENCY (DLA)
Andrew T. McNamara Building
8725 John J. Kingman Road
Fort Belvoir, VA 22060
Internet: http://www.dla.mil

U.S. DEPARTMENT OF AGRICULTURE (USDA)
Order AMS Publications from:
AGRICULTURAL MARKETING SERVICE (AMS)
Seed Regulatory and Testing Branch
USDA, AMS, LS Div.
Room 209, Bldg. 306, BARC-East
Beltsville, MD 20705-2325
Ph: 301-504-9430
Fax: 301-504-8098
Internet: http://www.ams.usda.gov/lsg/seed.htm
e-mail: jeri.irwin@usda.gov

Order Other Publications from:
U.S. Department of Agriculture
14th and Independence Ave., SW, Room 4028-S

Washington, DC 20250
Ph: 202-720-2791
Fax: 202-720-2166
Internet: http://www.usda.gov

U.S. DEPARTMENT OF COMMERCE (DOC)
1401 Constitution Avenue, NW
Washington, DC 20230
Internet: http://www.commerce.gov/

Order Publications From:
National Technical Information Service
5285 Port Royal Road
Springfield, VA 22161
Ph: 703-605-6000
Fax: 703-605-6900
Internet: http://www.ntis.gov

U.S. DEPARTMENT OF DEFENSE (DOD)
Order DOD Documents from:
National Technical Information Service
5285 Port Royal Road
Springfield, VA 22161
Ph: 703-605-6000
FAX: 703-605-6900
Internet: http://www.ntis.gov

Order Military Specifications, Standards and Related Publications from:
Department of Defense Single Stock Point for (DODSSP)
Defense Automation and Production Service (DAPS)
Bldg 4D
700 Robbins AV
Philadelphia, PA 19111-5094
Ph: 215-697-2179
Fax: 215-697-1462
Internet: http://www.dodssp.daps.mil

U.S. DEPARTMENT OF HOUSING AND URBAN DEVELOPMENT (HUD)
Order from:
HUD User
P.O. Box 6091
Rockville, MD 20849
Ph: 800-245-2691
Fax: 301-519-5767
Internet: http://www.huduser.org
e-mail: Huduser@aspensys.com

U.S. DEPARTMENT OF STATE (SD)
2201 C Street, NW
Washington, DC 20520
Ph: 202-647-4000
Internet: http://www.state.gov

U.S. DEPARTMENT OF TRANSPORTATION (DOT)
400 7th Street, SW
Washington, DC 20590
PH: 202-366-4000
Internet: http://www.dot.gov

U.S. ENVIRONMENTAL PROTECTION AGENCY (EPA)
Ariel Rios Building
1200 Pennsylvania Avenue, N.W.
Washington, DC 20460
Ph: 202-260-2090
FAX: 202-260-6257
Internet: http://www.epa.gov

NOTE --- Some documents are available only from:
National Technical Information Services (NTIS)
5285 Port Royal Rd.
Springfield, VA 22161
Ph: 703-605-6000
Fax: 703-605-6900
Internet: http://www.ntis.gov

U.S. FEDERAL AVIATION ADMINISTRATION (FAA)
Order for sale documents from:
Superintendant of Documents
P.O. Box 371954
Pittsburgh, PA 15250-7954
PH: 202-512-1800 (order desk)
Internet: http://www.gpo.gov

Order free documents from:
Federal Aviation Administration
Dept. of Transportation
Ardmore East Business Center
33410 75th Avenue
Landover, MD 20785
Ph:
FAX: 301-386-5394

Internet: http://www.faa.gov

U.S. FEDERAL COMMUNICATIONS COMMISSION (FCC)
445 12th Street SW
Washington, DC 20554
Phone: 888-CALL-FCC
Fax: 202-418-0232
Internet: http://www.fcc.gov
E-mail: fccinfo@fcc.gov

U.S. FEDERAL EMERGENCY MANAGEMENT AGENCY (FEMA)
500 C Street, SW
Washington, D.C. 20472
Phone: 202-566-1600
Internet: http://www.fema.gov

U.S. FEDERAL HIGHWAY ADMINISTRATION (FHWA)
Office of Highway Safety (HHS-31)
400 Seventh St., SW
Washington, DC 20590-0001
Ph: 202-366-0411
Fax: 202-366-2249
Internet: http://www.fhwa.dot.gov
Order from:

Superintendant of Documents
U. S. Government Printing Office
732 North Capitol Street, NW
Mailstop: SDE
Washington, DC 20401
Ph: 866-512-1800 or 202-512-1800
Fax: 202-512-2250
Internet: http://www.gpo.gov

U.S. GENERAL SERVICES ADMINISTRATION (GSA)
General Services Administration
1800 F Street, NW
Washington, DC 20405
PH: 202-501-0705

Order from:
General Services Administration
Federal Supply Service Bureau
1941 Jefferson Davis Highway
Arlington, VA 22202
PH: 703-605-5400
Internet: http://www.fss.gsa.gov/pub/fed-specs.cfm

U.S. NATIONAL ARCHIVES AND RECORDS ADMINISTRATION (NARA)
700 Pennsylvania Avenue, N.W.
Washington, D.C. 20408
Phone: 866-325-7208
Internet: http://www.archives.gov

Order documents from:
Superintendent of Documents
U.S.Government Printing Office
732 North Capitol Street, NW
Washington, DC 20401
Mailstop: SDE
Ph: 866-512-1800 or 202-512-1800
Fax: 202-512-2250
Internet: http://www.gpo.gov
E-mail: gpoaccess@gpo.gov

U.S. NAVAL FACILITIES ENGINEERING COMMAND (NAVFAC)
1510 Gilbert St.
Norfolk, VA 23511-2699
Ph: 757-322-4200
Fax: 757-322-4416
Internet: http://www.efdlant.navfac.navy.mil/LANTOPS 15

U.S. NAVAL FACILITIES ENGINEERING SERVICE CENTER (NFESC)
1100 23rd Avenue
Port Hueneme, CA 93043-4370
Ph: 805-982-4980
Internet: http://www.nfesc.navy.mil

WATER ENVIRONMENT FEDERATION (WEF)
601 Wythe St.
Alexandria, VA 22314-1994
Ph: 703-684-2452
Fax: 703-684-2492
Internet: http://www.wef.org

WATER QUALITY ASSOCIATION (WQA)
4151 Naperville Rd.
Lisle, IL 60532
Ph: 630-505-0160
Fax: 630-505-9637
Internet: http://www.wqa.org
e-mail: info@mail.wqa.org

WEST COAST LUMBER INSPECTION BUREAU (WCLIB)
P.O. Box 23145
Portland, OR 97281
Ph: 503-639-0651
Fax: 503-684-8928
Internet: http://www.wclib.org
e-mail: info@wclib.org

WESTERN WOOD PRESERVERS INSTITUTE (WWPI)
7017 N.E. Highway 99 # 108
Vancover, WA 98665
Ph: 360-693-9958
Fax: 360-693-9967
Internet: http://www.wwpinstitute.org
e-mail: info@wwpinstitute.org

WESTERN WOOD PRODUCTS ASSOCIATION (WWPA)
Yeon Bldg.
522 SW 5th Ave.
Suite 500
Portland, OR 97204-2122
Ph: 503-224-3930
Fax: 503-224-3934
Internet: http://www.wwpa.org
e-mail: info@wwpa.org

WINDOW AND DOOR MANUFACTURERS ASSOCIATION (WDMA)
1400 East Touhy Ave., Suite 470
Des Plaines, IL 60018
Ph: 847-299-5200 or 800-223-2301

Fax: 708-299-1286
Internet: http://www.wdma.com
e-mail: admin@wdma.com

WOOD MOULDING AND MILLWORK PRODUCERS ASSOCIATION (WMMPA)
507 First Street
Woodland, CA 95695
Ph: 530-661-9591 or 800-550-7889
Fax: 530-661-9586
Internet: http://www.wmmpa.com

-- End of Section --

SECTION TABLE OF CONTENTS

DIVISION 01 - GENERAL REQUIREMENTS

SECTION 01451A

CONTRACTOR QUALITY CONTROL

01/03

PART 1 GENERAL

1.1 REFERENCES
1.2 PAYMENT

PART 2 PRODUCTS (Not Applicable)

PART 3 EXECUTION

3.1 GENERAL REQUIREMENTS
3.2 QUALITY CONTROL PLAN
3.2.1 Content of the CQC Plan
3.2.2 Acceptance of Plan
3.2.3 Notification of Changes
3.3 COORDINATION MEETING
3.4 QUALITY CONTROL ORGANIZATION
3.4.1 Personnel Requirements
3.4.2 CQC System Manager
3.4.3 CQC Personnel
3.4.4 Additional Requirement
3.4.5 Organizational Changes
3.5 SUBMITTALS AND DELIVERABLES
3.6 CONTROL
3.6.1 Preparatory Phase
3.6.2 Initial Phase
3.6.3 Follow-up Phase
3.6.4 Additional Preparatory and Initial Phases
3.7 TESTS
3.7.1 Testing Procedure
3.7.2 Testing Laboratories
3.7.2.1 Capability Check
3.7.2.2 Capability Recheck
3.7.3 Onsite Laboratory
3.7.4 Furnishing or Transportation of Samples for Testing
3.8 COMPLETION INSPECTION
3.8.1 Punch-Out Inspection
3.8.2 Pre-Final Inspection
3.8.3 Final Acceptance Inspection
3.9 DOCUMENTATION
3.10 SAMPLE FORMS
3.11 NOTIFICATION OF NONCOMPLIANCE

-- End of Section Table of Contents --

UFGS-01451A (January 2003)

SECTION 01451A

CONTRACTOR QUALITY CONTROL
01/03

PART 1 GENERAL

1.1 REFERENCES

The publications listed below form a part of this specification to the extent referenced. The publications are referred to within the text by basic designation only.

ASTM INTERNATIONAL (ASTM)

ASTM D 3740	(2001) Minimum Requirements for Agencies Engaged in the Testing and/or Inspection of Soil and Rock as Used in Engineering Design and Construction
ASTM E 329	(2000b) Agencies Engaged in the Testing and/or Inspection of Materials Used in Construction

U.S. ARMY CORPS OF ENGINEERS (USACE)

ER 1110-1-12	Quality Management

1.2 PAYMENT

Separate payment will not be made for providing and maintaining an effective Quality Control program, and all costs associated therewith shall be included in the applicable unit prices or lump-sum prices contained in the Bidding Schedule.

PART 2 PRODUCTS (Not Applicable)

PART 3 EXECUTION

3.1 GENERAL REQUIREMENTS

The Contractor is responsible for quality control and shall establish and maintain an effective quality control system in compliance with the Contract Clause titled "Inspection of Construction." The quality control system shall consist of plans, procedures, and organization necessary to produce an end product which complies with the contract requirements. The system shall cover all construction operations, both onsite and offsite, and shall be keyed to the proposed construction sequence. The site project superintendent will be held responsible for the quality of work on the job and is subject to removal by the Contracting Officer for non-compliance with the quality requirements specified in the contract. The site project superintendent in this context shall be the highest level manager responsible for the overall construction activities at the site, including quality and production. The site project superintendent shall maintain a physical presence at the site at all times, except as otherwise acceptable

to the Contracting Officer, and shall be responsible for all construction and construction related activities at the site.

3.2 QUALITY CONTROL PLAN

The Contractor shall furnish for review by the Government, not later than 15 days after receipt of notice to proceed, the Contractor Quality Control (CQC) Plan proposed to implement the requirements of the Contract Clause titled "Inspection of Construction." The plan shall identify personnel, procedures, control, instructions, tests, records, and forms to be used. The Government will consider an interim plan for the first 30 days of operation. Construction will be permitted to begin only after acceptance of the CQC Plan or acceptance of an interim plan applicable to the particular feature of work to be started. Work outside of the features of work included in an accepted interim plan will not be permitted to begin until acceptance of a CQC Plan or another interim plan containing the additional features of work to be started.

3.2.1 Content of the CQC Plan

The CQC Plan shall include, as a minimum, the following to cover all construction operations, both onsite and offsite, including work by subcontractors, fabricators, suppliers, and purchasing agents:

a. A description of the quality control organization, including a chart showing lines of authority and acknowledgment that the CQC staff shall implement the three phase control system for all aspects of the work specified. The staff shall include a CQC System Manager who shall report to the project superintendent.

b. The name, qualifications (in resume format), duties, responsibilities, and authorities of each person assigned a CQC function.

c. A copy of the letter to the CQC System Manager signed by an authorized official of the firm which describes the responsibilities and delegates sufficient authorities to adequately perform the functions of the CQC System Manager, including authority to stop work which is not in compliance with the contract. The CQC System Manager shall issue letters of direction to all other various quality control representatives outlining duties, authorities, and responsibilities. Copies of these letters shall also be furnished to the Government.

d. Procedures for scheduling, reviewing, certifying, and managing submittals, including those of subcontractors, offsite fabricators, suppliers, and purchasing agents. These procedures shall be in accordance with Section 01330 SUBMITTAL PROCEDURES.

e. Control, verification, and acceptance testing procedures for each specific test to include the test name, specification paragraph requiring test, feature of work to be tested, test frequency, and person responsible for each test. (Laboratory facilities approved by the Contracting Officer shall be used.)

f. Procedures for tracking preparatory, initial, and follow-up control phases and control, verification, and acceptance tests including documentation.

g. Procedures for tracking construction deficiencies from identification through acceptable corrective action. These procedures shall establish verification that identified deficiencies have been corrected.

h. Reporting procedures, including proposed reporting formats.

i. A list of the definable features of work. A definable feature of work is a task which is separate and distinct from other tasks, has separate control requirements, and may be identified by different trades or disciplines, or it may be work by the same trade in a different environment. Although each section of the specifications may generally be considered as a definable feature of work, there are frequently more than one definable features under a particular section. This list will be agreed upon during the coordination meeting.

3.2.2 Acceptance of Plan

Acceptance of the Contractor's plan is required prior to the start of construction. Acceptance is conditional and will be predicated on satisfactory performance during the construction. The Government reserves the right to require the Contractor to make changes in his CQC Plan and operations including removal of personnel, as necessary, to obtain the quality specified.

3.2.3 Notification of Changes

After acceptance of the CQC Plan, the Contractor shall notify the Contracting Officer in writing of any proposed change. Proposed changes are subject to acceptance by the Contracting Officer.

3.3 COORDINATION MEETING

After the Preconstruction Conference, before start of construction, and prior to acceptance by the Government of the CQC Plan, the Contractor shall meet with the Contracting Officer or Authorized Representative and discuss the Contractor's quality control system. The CQC Plan shall be submitted for review a minimum of 7 calendar days prior to the Coordination Meeting. During the meeting, a mutual understanding of the system details shall be developed, including the forms for recording the CQC operations, control activities, testing, administration of the system for both onsite and offsite work, and the interrelationship of Contractor's Management and control with the Government's Quality Assurance. Minutes of the meeting shall be prepared by the Government and signed by both the Contractor and the Contracting Officer. The minutes shall become a part of the contract file. There may be occasions when subsequent conferences will be called by either party to reconfirm mutual understandings and/or address deficiencies in the CQC system or procedures which may require corrective action by the Contractor.

3.4 QUALITY CONTROL ORGANIZATION

3.4.1 Personnel Requirements

The requirements for the CQC organization are a CQC System Manager and sufficient number of additional qualified personnel to ensure safety and contract compliance. The Safety and Health Manager shall receive direction and authority from the CQC System Manager and shall serve as a member of

the CQC staff. Personnel identified in the technical provisions as requiring specialized skills to assure the required work is being performed properly will also be included as part of the CQC organization. The Contractor's CQC staff shall maintain a presence at the site at all times during progress of the work and have complete authority and responsibility to take any action necessary to ensure contract compliance. The CQC staff shall be subject to acceptance by the Contracting Officer. The Contractor shall provide adequate office space, filing systems and other resources as necessary to maintain an effective and fully functional CQC organization. Complete records of all letters, material submittals, shop drawing submittals, schedules and all other project documentation shall be promptly furnished to the CQC organization by the Contractor. The CQC organization shall be responsible to maintain these documents and records at the site at all times, except as otherwise acceptable to the Contracting Officer.

3.4.2 CQC System Manager

The Contractor shall identify as CQC System Manager an individual within the onsite work organization who shall be responsible for overall management of CQC and have the authority to act in all CQC matters for the Contractor. The CQC System Manager shall be a graduate engineer, graduate architect, or a graduate of construction management, with a minimum of 10 years construction experience on construction similar to this contract. or a construction person with a minimum of 15 years in related work. This CQC System Manager shall be on the site at all times during construction and shall be employed by the prime Contractor. The CQC System Manager shall be assigned no other duties. An alternate for the CQC System Manager shall be identified in the plan to serve in the event of the System Manager's absence. The requirements for the alternate shall be the same as for the designated CQC System Manager.

3.4.3 CQC Personnel

In addition to CQC personnel specified elsewhere in the contract, the Contractor shall provide as part of the CQC organization specialized personnel to assist the CQC System Manager for the following areas: electrical, mechanical, and structural. These individuals may be employees of the prime or subcontractor; be responsible to the CQC System Manager; be physically present at the construction site during work on their areas of responsibility; have the necessary education and/or experience in accordance with the experience matrix listed herein. These individuals may perform other duties but must be allowed sufficient time to perform their assigned quality control duties as described in the Quality Control Plan.

Experience Matrix

	Area	Qualifications
a.	Mechanical	Graduate Mechanical Engineer with 2 yrs experience or person with 5 yrs related experience
b.	Electrical	Graduate Electrical Engineer with 2 yrs related experience or person with 5 yrs

Experience Matrix

Area		Qualifications
		related experience
c.	Structural	Graduate Structural Engineer with 2 yrs experience or person with 5 yrs related experience

3.4.4 Additional Requirement

In addition to the above experience and education requirements the CQC System Manager shall have completed the course entitled "Construction Quality Management For Contractors". This course is periodically offered quarterly within tbe Savannah District boundaries

a. CQC System Managers who have not successfully completed this course must attend the next available training session. Failure to successfully complete this training within the next available training date will be grounds for removal as CQC System Manager. There is currently a nominal fee to cover the cost of the training materials for Contractors who have current contracts with the Savannah District.

3.4.5 Organizational Changes

The Contractor shall maintain the CQC staff at full strength at all times. When it is necessary to make changes to the CQC staff, the Contractor shall revise the CQC Plan to reflect the changes and submit the changes to the Contracting Officer for acceptance.

3.5 SUBMITTALS AND DELIVERABLES

Submittals, if needed, shall be made as specified in Section 01330 SUBMITTAL PROCEDURES. The CQC organization shall be responsible for certifying that all submittals and deliverables are in compliance with the contract requirements. When Section 15950A HEATING, VENTILATING AND AIR CONDITIONING (HVAC) CONTROL SYSTEMS; 15951A DIRECT DIGITAL CONTROL FOR HVAC; 15990A TESTING, ADJUSTING, AND BALANCING OF HVAC SYSTEMS; or 15995A COMMISSIONING OF HVAC SYSTEMS are included in the contract, the submittals required by those sections shall be coordinated with Section 01330 SUBMITTAL PROCEDURES to ensure adequate time is allowed for each type of submittal required.

3.6 CONTROL

Contractor Quality Control is the means by which the Contractor ensures that the construction, to include that of subcontractors and suppliers, complies with the requirements of the contract. At least three phases of control shall be conducted by the CQC System Manager for each definable feature of the construction work as follows:

3.6.1 Preparatory Phase

This phase shall be performed prior to beginning work on each definable

feature of work, after all required plans/documents/materials are approved/accepted, and after copies are at the work site. This phase shall include:

a. A review of each paragraph of applicable specifications, reference codes, and standards. A copy of those sections of referenced codes and standards applicable to that portion of the work to be accomplished in the field shall be made available by the Contractor at the preparatory inspection. These copies shall be maintained in the field and available for use by Government personnel until final acceptance of the work.

b. A review of the contract drawings.

c. A check to assure that all materials and/or equipment have been tested, submitted, and approved.

d. Review of provisions that have been made to provide required control inspection and testing.

e. Examination of the work area to assure that all required preliminary work has been completed and is in compliance with the contract.

f. A physical examination of required materials, equipment, and sample work to assure that they are on hand, conform to approved shop drawings or submitted data, and are properly stored.

g. A review of the appropriate activity hazard analysis to assure safety requirements are met.

h. Discussion of procedures for controlling quality of the work including repetitive deficiencies. Document construction tolerances and workmanship standards for that feature of work.

i. A check to ensure that the portion of the plan for the work to be performed has been accepted by the Contracting Officer.

j. Discussion of the initial control phase.

k. The Government shall be notified at least 48 hours in advance of beginning the preparatory control phase. This phase shall include a meeting conducted by the CQC System Manager and attended by the superintendent, other CQC personnel (as applicable), and the foreman responsible for the definable feature. The results of the preparatory phase actions shall be documented by separate minutes prepared by the CQC System Manager and attached to the daily CQC report. The Contractor shall instruct applicable workers as to the acceptable level of workmanship required in order to meet contract specifications.

3.6.2 Initial Phase

This phase shall be accomplished at the beginning of a definable feature of work. The following shall be accomplished:

a. A check of work to ensure that it is in full compliance with contract requirements. Review minutes of the preparatory meeting.

b. Verify adequacy of controls to ensure full contract compliance. Verify required control inspection and testing.

c. Establish level of workmanship and verify that it meets minimum acceptable workmanship standards. Compare with required sample panels as appropriate.

d. Resolve all differences.

e. Check safety to include compliance with and upgrading of the safety plan and activity hazard analysis. Review the activity analysis with each worker.

f. The Government shall be notified at least 24 hours in advance of beginning the initial phase. Separate minutes of this phase shall be prepared by the CQC System Manager and attached to the daily CQC report. Exact location of initial phase shall be indicated for future reference and comparison with follow-up phases.

g. The initial phase should be repeated for each new crew to work onsite, or any time acceptable specified quality standards are not being met.

3.6.3 Follow-up Phase

Daily checks shall be performed to assure control activities, including control testing, are providing continued compliance with contract requirements, until completion of the particular feature of work. The checks shall be made a matter of record in the CQC documentation. Final follow-up checks shall be conducted and all deficiencies corrected prior to the start of additional features of work which may be affected by the deficient work. The Contractor shall not build upon nor conceal non-conforming work.

3.6.4 Additional Preparatory and Initial Phases

Additional preparatory and initial phases shall be conducted on the same definable features of work if: the quality of on-going work is unacceptable; if there are changes in the applicable CQC staff, onsite production supervision or work crew; if work on a definable feature is resumed after a substantial period of inactivity; or if other problems develop.

3.7 TESTS

3.7.1 Testing Procedure

The Contractor shall perform specified or required tests to verify that control measures are adequate to provide a product which conforms to contract requirements. Upon request, the Contractor shall furnish to the Government duplicate samples of test specimens for possible testing by the Government. Testing includes operation and/or acceptance tests when specified. The Contractor shall procure the services of a Corps of Engineers approved testing laboratory or establish an approved testing laboratory at the project site. The Contractor shall perform the following activities and record and provide the following data:

a. Verify that testing procedures comply with contract requirements.

b. Verify that facilities and testing equipment are available and comply with testing standards.

c. Check test instrument calibration data against certified standards.

d. Verify that recording forms and test identification control number system, including all of the test documentation requirements, have been prepared.

e. Results of all tests taken, both passing and failing tests, shall be recorded on the CQC report for the date taken. Specification paragraph reference, location where tests were taken, and the sequential control number identifying the test shall be given. If approved by the Contracting Officer, actual test reports may be submitted later with a reference to the test number and date taken. An information copy of tests performed by an offsite or commercial test facility shall be provided directly to the Contracting Officer. Failure to submit timely test reports as stated may result in nonpayment for related work performed and disapproval of the test facility for this contract.

3.7.2 Testing Laboratories

3.7.2.1 Capability Check

The Government reserves the right to check laboratory equipment in the proposed laboratory for compliance with the standards set forth in the contract specifications and to check the laboratory technician's testing procedures and techniques. Laboratories utilized for testing soils, concrete, asphalt, and steel shall meet criteria detailed in ASTM D 3740 and ASTM E 329.

3.7.2.2 Capability Recheck

If the selected laboratory fails the capability check, the Contractor will be assessed a charge to reimburse the Government for each succeeding recheck of the laboratory or the checking of a subsequently selected laboratory. Such costs will be deducted from the contract amount due the Contractor.

3.7.3 Onsite Laboratory

The Government reserves the right to utilize the Contractor's control testing laboratory and equipment to make assurance tests, and to check the Contractor's testing procedures, techniques, and test results at no additional cost to the Government.

3.7.4 Furnishing or Transportation of Samples for Testing

Costs incidental to the transportation of samples or materials shall be borne by the Contractor. Samples of materials for test verification and acceptance testing by the Government shall be delivered to the following address:

For delivery by mail: U S Army Engineer District, Savannah Environmental and Materials Unit, 200 North Cobb Parkway, Building 400, Suite 40, Marietta, GA 50062.

For other deliveries: U S Army Engineer District, Savannah

Environmental and Materials Unit, 200 North Cobb Parkway, Building 400, Suite 40, Marietta, GA 50062.

Coordination for each specific test, exact delivery location, and dates will be made through the Resident Office.

3.8 COMPLETION INSPECTION

3.8.1 Punch-Out Inspection

Near the end of the work, or any increment of the work established by a time stated in the SPECIAL CONTRACT REQUIREMENTS Clause, "Commencement, Prosecution, and Completion of Work", or by the specifications, the CQC Manager shall conduct an inspection of the work. A punch list of items which do not conform to the approved drawings and specifications shall be prepared and included in the CQC documentation, as required by paragraph DOCUMENTATION. The list of deficiencies shall include the estimated date by which the deficiencies will be corrected. The CQC System Manager or staff shall make a second inspection to ascertain that all deficiencies have been corrected. Once this is accomplished, the Contractor shall notify the Government that the facility is ready for the Government Pre-Final inspection.

3.8.2 Pre-Final Inspection

The Government will perform the pre-final inspection to verify that the facility is complete and ready to be occupied. A Government Pre-Final Punch List may be developed as a result of this inspection. The Contractor's CQC System Manager shall ensure that all items on this list have been corrected before notifying the Government, so that a Final inspection with the customer can be scheduled. Any items noted on the Pre-Final inspection shall be corrected in a timely manner. These inspections and any deficiency corrections required by this paragraph shall be accomplished within the time slated for completion of the entire work or any particular increment of the work if the project is divided into increments by separate completion dates.

3.8.3 Final Acceptance Inspection

The Contractor's Quality Control Inspection personnel, plus the superintendent or other primary management person, and the Contracting Officer's Representative shall be in attendance at the final acceptance inspection. Additional Government personnel including, but not limited to, those from Base/Post Civil Facility Engineer user groups, and major commands may also be in attendance. The final acceptance inspection will be formally scheduled by the Contracting Officer based upon results of the Pre-Final inspection. Notice shall be given to the Contracting Officer at least 14 days prior to the final acceptance inspection and shall include the Contractor's assurance that all specific items previously identified to the Contractor as being unacceptable, along with all remaining work performed under the contract, will be complete and acceptable by the date scheduled for the final acceptance inspection. Failure of the Contractor to have all contract work acceptably complete for this inspection will be cause for the Contracting Officer to bill the Contractor for the Government's additional inspection cost in accordance with the contract clause titled "Inspection of Construction".

3.9 DOCUMENTATION

The Contractor shall maintain current records providing factual evidence that required quality control activities and/or tests have been performed. These records shall include the work of subcontractors and suppliers and shall be on an acceptable form that includes, as a minimum, the following information:

a. Contractor/subcontractor and their area of responsibility.

b. Operating plant/equipment with hours worked, idle, or down for repair.

c. Work performed each day, giving location, description, and by whom. When Network Analysis (NAS) is used, identify each phase of work performed each day by NAS activity number.

d. Test and/or control activities performed with results and references to specifications/drawings requirements. The control phase shall be identified (Preparatory, Initial, Follow-up). List of deficiencies noted, along with corrective action.

e. Quantity of materials received at the site with statement as to acceptability, storage, and reference to specifications/drawings requirements.

f. Submittals and deliverables reviewed, with contract reference, by whom, and action taken.

g. Offsite surveillance activities, including actions taken.

h. Job safety evaluations stating what was checked, results, and instructions or corrective actions.

i. Instructions given/received and conflicts in plans and/or specifications.

j. Contractor's verification statement.

These records shall indicate a description of trades working on the project; the number of personnel working; weather conditions encountered; and any delays encountered. These records shall cover both conforming and deficient features and shall include a statement that equipment and materials incorporated in the work and workmanship comply with the contract. The original and one copy of these records in report form shall be furnished to the Government daily within 24 hours after the date covered by the report, except that reports need not be submitted for days on which no work is performed. As a minimum, one report shall be prepared and submitted for every 7 days of no work and on the last day of a no work period. All calendar days shall be accounted for throughout the life of the contract. The first report following a day of no work shall be for that day only. Reports shall be signed and dated by the CQC System Manager. The report from the CQC System Manager shall include copies of test reports and copies of reports prepared by all subordinate quality control personnel.

3.10 SAMPLE FORMS

Sample forms enclosed at the end of this section.

3.11 NOTIFICATION OF NONCOMPLIANCE

The Contracting Officer will notify the Contractor of any detected noncompliance with the foregoing requirements. The Contractor shall take immediate corrective action after receipt of such notice. Such notice, when delivered to the Contractor at the work site, shall be deemed sufficient for the purpose of notification. If the Contractor fails or refuses to comply promptly, the Contracting Officer may issue an order stopping all or part of the work until satisfactory corrective action has been taken. No part of the time lost due to such stop orders shall be made the subject of claim for extension of time or for excess costs or damages by the Contractor.

-- End of Section --

SECTION TABLE OF CONTENTS

DIVISION 01 - GENERAL REQUIREMENTS

SECTION 01500

TEMPORARY CONSTRUCTION FACILITIES

02/97

PART 1 GENERAL

1.1 GENERAL REQUIREMENTS
1.1.1 Site Plan
1.1.2 Identification of Employees
1.1.3 Employee Parking
1.2 AVAILABILITY AND USE OF UTILITY SERVICES
1.2.1 Payment for Utility Services
1.2.2 Meters and Temporary Connections
1.2.3 Advance Deposit
1.2.4 Final Meter Reading
1.2.5 Sanitation
1.2.6 Telephone
1.3 BULLETIN BOARD, PROJECT SIGN, AND PROJECT SAFETY SIGN
1.3.1 Bulletin Board
1.3.2 Project Signs
1.4 PROTECTION AND MAINTENANCE OF TRAFFIC
1.4.1 Haul Roads
1.4.2 Barricades
1.5 CONTRACTOR'S TEMPORARY FACILITIES
1.5.1 Administrative Field Offices
1.5.2 Storage Area
1.5.3 Supplemental Storage Area
1.5.4 Appearance of Trailers
1.5.5 Maintenance of Storage Area
1.5.6 New Building
1.5.7 Security Provisions
1.6 GOVERNMENT FIELD OFFICE
1.6.1 Resident Engineer's Office
1.6.2 Trailer-Type Mobile Office
1.7 PLANT COMMUNICATION
1.8 TEMPORARY PROJECT SAFETY FENCING
1.9 PARTNERING
1.10 INSTALLATION REGULATIONS
1.11 TESTING LABORATORIES
1.11.1 Approved Testing Laboratories
1.11.2 Other Laboratory Services
1.12 ENVIRONMENTAL EVALUATION FOR SITE CONTAMINATION - CATEGORY I
1.12.1 Site Evaluation
1.12.2 Contractual Responsibilities of All Parties in the Event of Encounter with Contamination
1.13 CONSTRUCTION SCHEDULE RESTRAINTS
1.13.1 Phasing and Sequence
1.13.1.1 General
1.13.1.2 Special Work Restraints
1.13.2 Time of Performance
1.13.2.1 Access to Buildings
1.13.2.2 Work Requiring Outages

1.13.3 Outages
1.13.4 Rate to Charge Contractor
1.13.5 Disposition of Materials
1.13.6 Base Civil Engineering Work Clearance Request (AF Form 103)
1.13.7 Labeling of Storage Drums
1.13.8 Contractor Storage Trailer(s) and Building(s)
1.13.9 Continuity
1.14 COLOR BOARDS
1.15 REQUEST FOR INFORMATION (RFI) SYSTEM
1.16 PROGRESS PHOTOGRAPHS
1.17 CLEANUP
1.18 RESTORATION OF STORAGE AREA

PART 2 PRODUCTS (NOT APPLICABLE)

PART 3 EXECUTION (NOT APPLICABLE)

-- End of Section Table of Contents --

CEGS-01500/S (February 1997)

SECTION 01500

TEMPORARY CONSTRUCTION FACILITIES
02/97

PART 1 GENERAL

1.1 GENERAL REQUIREMENTS

1.1.1 Site Plan

The Contractor shall prepare a site plan indicating the proposed location and dimensions of any area to be fenced and used by the Contractor, the number of trailers to be used, avenues of ingress/egress to the fenced area and details of the fence installation. Any areas which may have to be graveled to prevent the tracking of mud shall also be identified. The Contractor shall also indicate if the use of a supplemental or other staging area is desired.

1.1.2 Identification of Employees

The Contractor shall be responsible for furnishing to each employee, and for requiring each employee engaged on the work to display, identification as approved and directed by the Contracting Officer. Contractor and subcontractor personnel shall wear identifying markings on hard hats clearly identifying the company for whom the employee works. Contractor shall provide a list of all employees with name, Social Security number, stste issued identification number, before arrival at job site.

1.1.3 Employee Parking

Contractor employees shall park privately owned vehicles in an area designated by the Contracting Officer. This area will be within reasonable walking distance of the construction site. Contractor employee parking shall not interfere with existing and established parking requirements of the military installation.

1.2 AVAILABILITY AND USE OF UTILITY SERVICES

1.2.1 Payment for Utility Services

The Government will make all reasonably required utilities available to the Contractor from existing outlets and supplies, as specified in the contract. Unless otherwise provided in the contract, the amount of each utility service consumed shall be charged to or paid for by the Contractor at prevailing rates charged to the Government or, where the utility is produced by the Government, at reasonable rates determined by the Contracting Officer. The Contractor shall carefully conserve any utilities furnished without charge.

1.2.2 Meters and Temporary Connections

The Contractor, at its expense and in a manner satisfactory to the Contracting Officer, shall provide and maintain necessary temporary connections, distribution lines, and meters required to measure the amount of each utility used for the purpose of determining charges. The

Contractor shall notify the Contracting Officer, in writing, 5 working days before final electrical connection is desired so that a utilities coordination can be established. The Contractor shall make the final electrical connection.

1.2.3 Advance Deposit

An advance deposit for utilities consisting of an estimated month's usage or a minimum of $50.00 will be required. The last monthly bills for the fiscal year will normally be offset by the deposit and adjustments will be billed or returned as appropriate. Services to be rendered for the next fiscal year, beginning 1 October, will require a new deposit. Notification of the due date for this deposit will be mailed to the Contractor prior to the end of the current fiscal year.

1.2.4 Final Meter Reading

Before completion of the work and final acceptance of the work by the Government, the Contractor shall notify the Contracting Officer, in writing, 5 working days before termination is desired. The Government will take a final meter reading. The Contractor shall then remove all the temporary service and distribution lines, meter bases, and associated paraphernalia. The Contractor shall pay all outstanding utility bills before final acceptance of the work by the Government.

1.2.5 Sanitation

The Contractor shall provide and maintain within the construction area minimum field-type sanitary facilities approved by the Contracting Officer. Government toilet facilities will not be available to Contractor's personnel.

1.2.6 Telephone

The Contractor shall make arrangements and pay all costs for telephone facilities desired.

1.3 BULLETIN BOARD, PROJECT SIGN, AND PROJECT SAFETY SIGN

1.3.1 Bulletin Board

Immediately upon beginning of work, the Contractor shall provide a weatherproof glass-covered bulletin board not less than 36 by 48 inches in size for displaying the Equal Employment Opportunity poster, a copy of the wage decision contained in the contract, Wage Rate Information poster, and other information approved by the Contracting Officer. The bulletin board shall be located at the project site in a conspicuous place easily accessible to all employees, as approved by the Contracting Officer. Legible copies of the aforementioned data shall be displayed until work is completed. Upon completion of work the bulletin board shall be removed by and remain the property of the Contractor.

1.3.2 Project Signs

The Contractor shall furnish and erect a project sign in the location as selected by the Contracting Officer. Details of construction shall be as shown on sketches included in Attachment 1 to Section 00800. The sign shall be constructed of 1/2 inch thick (or metric equivalent), grade A-C, exterior type plywood. The sign shall receive one coat primer paint

followed by two coats brown color paint in accordance with Fed. Std. 595a, Color No. 20100 semigloss exterior type enamel. Lettering must be white gloss exterior type enamel (Fed. Std. 595a, Color No. 37875). Windows and door of the Castle and logo background shall be painted white (Fed. Std. 595a, Color No. 37875). The Castle and inner border line shall be brown (Fed. Std. 595a, Color No. 20100). Upon completion of work under this contract, the project sign shall be removed from the job site and shall remain the property of the Contractor.

The Engineering and Services Directorate emblem (AFVA 85-3) may be acquired by sending a letter; a completed DD Form 1149, Requisition and Invoice/Shipping Document; or a DA Form 17, Requisition for Publications (Army customers) to:

The Air Force Publishing Distribution Center
2800 Eastern Boulevard
Baltimore, MD 21220-2898

1.4 PROTECTION AND MAINTENANCE OF TRAFFIC

During construction the Contractor shall provide access and temporary relocated roads as necessary to maintain traffic. The Contractor shall maintain and protect traffic on all affected roads during the construction period except as otherwise specifically directed by the Contracting Officer. Measures for the protection and diversion of traffic, including the provision of watchmen and flagmen, erection of barricades, placing of lights around and in front of equipment and the work, and the erection and maintenance of adequate warning, danger, and direction signs, shall be as required by the State and local authorities having jurisdiction. The traveling public shall be protected from damage to person and property. The Contractor's traffic on roads selected for hauling material to and from the site shall interfere as little as possible with public traffic. The Contractor shall investigate the adequacy of existing roads and the allowable load limit on these roads. The Contractor shall be responsible for the repair of any damage to roads caused by construction operations.

1.4.1 Haul Roads

The Contractor will be required to use the haul routes shown on the plans unless otherwise permitted in writing by the Contracting Officer. When haul routes are not designated on the plans, the Contractor must obtain approval of the Contracting Officer of haul routes he intends to use. The Contractor shall maintain the haul routes and shall keep the dust problem under control by wetting the surface as needed. Sweeping and cleaning of pavements will be done as necessary to remove spillage resulting from the hauling operations. After all hauling has been completed, the Contractor shall restore the earth areas used for the haul routes to original condition by final grading, shaping, compacting, and grassing, and shall clean and sweep all paved areas as required. Any pavement damaged as a result of hauling operations under this contract for both the earth and other materials shall be promptly repaired by the Contractor, as approved by the Contracting Officer. The cost of maintenance and repair of the haul routes, as mentioned above, shall be considered as a subsidiary obligation of the Contractor. The axle load of earth hauling equipment operating on paved streets shall not exceed 18,000 pounds.

1.4.2 Barricades

The Contractor shall erect and maintain temporary barricades to limit

public access to hazardous areas. Such barricades shall be required whenever safe public access to paved areas such as roads, parking areas or sidewalks is prevented by construction activities or as otherwise necessary to ensure the safety of both pedestrian and vehicular traffic. Barricades shall be securely placed, clearly visible with adequate illumination to provide sufficient visual warning of the hazard during both day and night.

1.5 CONTRACTOR'S TEMPORARY FACILITIES

1.5.1 Administrative Field Offices

The Contractor shall provide and maintain administrative field office facilities within the construction area at the designated site. Government office and warehouse facilities will not be available to the Contractor's personnel.

1.5.2 Storage Area

The Contractor shall construct a temporary 6 foot high chain link fence around the entire project site. The fence shall include fabric, colored brown, so that visibility through the fence is obstructed. Contractor shall continually maintain fence fabric. Fence posts may be driven, in lieu of concrete bases, where soil conditions permit. Trailers, materials, or equipment shall not be placed or stored outside the fenced area unless such trailers, materials, or equipment are assigned a separate and distinct storage area by the Contracting Officer away from the vicinity of the construction site but within the military boundaries. Trailers, equipment, or materials shall not be open to public view with the exception of those items which are in support of ongoing work on any given day. Materials shall not be stockpiled outside the fence in preparation for the next day's work. Mobile equipment, such as tractors, wheeled lifting equipment, cranes, trucks, and like equipment, shall be parked within the fenced area at the end of each work day.

1.5.3 Supplemental Storage Area

Upon Contractor's request, the Contracting Officer will designate another or supplemental area for the Contractor's use and storage of trailers, equipment, and materials. This area may not be in close proximity of the construction site but shall be within the military boundaries. Fencing of materials or equipment will not be required at this site; however, the Contractor shall be responsible for cleanliness and orderliness of the area used and for the security of any material or equipment stored in this area. Utilities will not be provided to this area by the Government.

1.5.4 Appearance of Trailers

Trailers utilized by the Contractor for administrative or material storage purposes shall present a clean and neat exterior appearance and shall be in a state of good repair. Trailers which, in the opinion of the Contracting Officer, require exterior painting or maintenance will not be allowed on the military property.

1.5.5 Maintenance of Storage Area

Fencing shall be kept in a state of good repair and proper alignment. Should the Contractor elect to traverse, with construction equipment or other vehicles, grassed or unpaved areas which are not established roadways, such areas shall be covered with a layer of gravel as necessary

to prevent rutting and the tracking of mud onto paved or established roadways; gravel gradation shall be at the Contractor's discretion. Grass located within the boundaries of the construction site shall be mowed for the duration of the project. Grass and vegetation along fences, buildings, under trailers, and in areas not accessible to mowers shall be edged or trimmed neatly.

1.5.6 New Building

In the event a new building is constructed for the temporary project field office, it shall be a minimum 12 feet in width, 16 feet in length and have a minimum of 7 feet headroom. It shall be equipped with approved electrical wiring, at least one double convenience outlet and the required switches and fuses to provide 110-120 volt power. It shall be provided with a work table with stool, desk with chair, two additional chairs, and one legal size file cabinet that can be locked. The building shall be waterproof, shall be supplied with heater, shall have a minimum of two doors, electric lights, a telephone, a battery operated smoke detector alarm, a sufficient number of adjustable windows for adequate light and ventilation, and a supply of approved drinking water. Approved sanitary facilities shall be furnished. The windows and doors shall be screened and the doors provided with dead bolt type locking devices or a padlock and heavy duty hasp bolted to the door. Door hinge pins shall be non-removable. The windows shall be arranged to open and to be securely fastened from the inside. Glass panels in windows shall be protected by bars or heavy mesh screens to prevent easy access to the building through these panels. In warm weather, air conditioning capable of maintaining the office at 50 percent relative humidity and a room temperature 20 degrees F below the outside temperature when the outside temperature is 95 degrees F, shall be furnished. Any new building erected for a temporary field office shall be maintained by the Contractor during the life of the contract and upon completion and acceptance of the work shall become the property of the Contractor and shall be removed from the site. All charges for telephone service for the temporary field office shall be borne by the Contractor, including long distance charges up to a maximum of $75.00 per month.

1.5.7 Security Provisions

Adequate outside security lighting shall be provided at the Contractor's temporary facilities. The Contractor shall be responsible for the security of its own equipment; in addition, the Contractor shall notify the appropriate law enforcement agency requesting periodic security checks of the temporary project field office.

1.6 GOVERNMENT FIELD OFFICE

1.6.1 Resident Engineer's Office

The Contractor shall provide the Government Resident Engineer with an office, approximately 200 square feet in floor area, located where directed and providing space heat, electric light and power, and toilet facilities consisting of one lavatory and one water closet complete with connections to water and sewer mains. A mail slot in the door or a lockable mail box mounted on the surface of the door shall be provided. At completion of the project, the office shall remain the property of the Contractor and shall be removed from the site. Utilities shall be connected and disconnected in accordance with local codes and to the satisfaction of the Contracting Officer.

1.6.2 Trailer-Type Mobile Office

The Contractor may, at its option, furnish and maintain a trailer-type mobile office acceptable to the Contracting Officer and providing as a minimum the facilities specified above. The trailer shall be securely anchored to the ground at all four corners to guard against movement during high winds.

1.7 PLANT COMMUNICATION

Whenever the Contractor has the individual elements of its plant so located that operation by normal voice between these elements is not satisfactory, the Contractor shall install a satisfactory means of communication, such as telephone or other suitable devices. The devices shall be made available for use by Government personnel.

1.8 TEMPORARY PROJECT SAFETY FENCING

As soon as practicable, but not later than 15 days after the date established for commencement of work, the Contractor shall furnish and erect temporary project safety fencing at the work site. The safety fencing shall be chain link type, a minimum of 42 inches high, supported and tightly secured to steel posts located on maximum 10 foot centers, constructed at the approved location. The safety fencing shall be maintained by the Contractor during the life of the contract and, upon completion and acceptance of the work, shall become the property of the Contractor and shall be removed from the work site.

1.9 PARTNERING

Following contract award, the Government intends to propose a voluntary partnering relationship with the Contractor. This partnering relationship will attempt to draw on strengths of each organization to facilitate communications and minimize delays to achieve a quality product, within budget, and on schedule. Participation in such partnering activities may include attendance at coordination meetings and cooperation in other efforts to promote the partnering relationship. The Government and the Contractor will each bear their own costs for participation in the partnering relationship, with no change in the contract price. Participation will not result in any change in the terms or price of the contract.

1.10 INSTALLATION REGULATIONS

The employees of the Contractor will be required to abide by all installation regulations as published by the Commanding Officer. A copy of these regulations can be obtained from the Area/Resident Engineer at the installation. All costs in connection therewith shall be included in the contract price for the work.

1.11 TESTING LABORATORIES

Testing is required to be performed by the Contractor as part of his Quality Control Program to verify contract compliance. This Quality Control Testing is to be conducted by a project or commercial laboratory which has been found adequate and qualified by a Corps of Engineers Division Laboratory Inspection Team.

1.11.1 Approved Testing Laboratories

A composite listing of approved testing laboratories within the Savannah District is available upon request. The Contractor should engage the services of a laboratory contained in the composite list. Contractors may obtain the list by calling (678) 354-0310. Fax requests can be made to number (678) 354-0330.

1.11.2 Other Laboratory Services

The Contractor may engage the services of a laboratory other than those approved by Corps of Engineers District Laboratory Inspection Team if they comply with the following:

a. The Contractor identifies and proposes the unapproved laboratory a minimum of 90 days prior to the start of testing. This time is necessary to allow for scheduling an inspection by a Corps of Engineers District Laboratory team. The time for Government inspection will not be the basis for an increase in the contract performance period.

b. All costs of Government inspection shall be the responsibility of the Contractor.

c. The Contractor may request Government inspection and approval prior to award by forwarding a written request to:

US Army Engineer District, Savannah
Environmental and Materials Unit
200 North Cobb Parkway
Building 400, Suite 404
Marietta, GA 30062

1.12 ENVIRONMENTAL EVALUATION FOR SITE CONTAMINATION - CATEGORY I

1.12.1 Site Evaluation

The job site has been evaluated for potential site contamination. The site is located in a traditionally nonhazardous location. The installation has no reason to suspect contamination.

1.12.2 Contractual Responsibilities of All Parties in the Event of Encounter with Contamination

If the Contractor encounters materials or conditions which indicate that there may be contamination on the site, the Contractor shall stop all work on the job site and report the discovery of the contaminants to the Contracting Officer's Representative (COR). The COR, will issue a written order to the Contractor to resume work or to suspend, delay, or interrupt all or any part of the work of this contract for the period of time that the Contracting Officer determines appropriate for the convenience of the Government as provided in FAR 52.242-14 - SUSPENSION OF WORK. The Government will be responsible for making an assessment of the contaminated site if this course of action is determined to be appropriate. After the assessment has been completed, the Government reserves the right to the following courses of action:

a. Direct the Contractor to resume work.

b. Clean up the contaminated site prior to directing the Contractor to resume work. The COR will determine whether the cleanup is to be accomplished by others or the Contractor.

c. Relocate the project site.

d. Terminate the contract for the convenience of the Government as provided in FAR 52.249-1 - TERMINATION FOR CONVENIENCE OF THE GOVERNMENT (FIXED-PRICE) (SHORT FORM) or FAR 52.249-2 - TERMINATION FOR CONVENIENCE OF THE GOVERNMENT (FIXED-PRICE) - ALTERNATE I as applicable.

1.13 CONSTRUCTION SCHEDULE RESTRAINTS

1.13.1 Phasing and Sequence

1.13.1.1 General

In addition to the submittals required by clause SCHEDULES FOR CONSTRUCTION CONTRACTS (see SECTION 00700, FAR 52.236-15) the Contractor shall submit for approval a summary work schedule setting forth schedule dates for initiation and completion of construction in each work area. No work shall be performed prior to approval of this schedule and all work shall be performed in strict adherence thereto. If departures from this schedule appear to be required or desired, the Contracting Officer shall be promptly notified and his approval will be required prior to implementation of said departure(s).

1.13.1.2 Special Work Restraints

.The existing steam line must remain in operation until 01 April 2004. After this date, the existing steam line can be abated and removed as shown on Plate MS-1 and as specified in the specifications.

1.13.2 Time of Performance

1.13.2.1 Access to Buildings

All work requiring access to building interiors excluding attics, crawl spaces, etc., and all other work shall be performed between 7:30 a.m. and 4 p.m. (normal working hours for base where project is located) excluding official holidays, unless otherwise indicated or approved by the Contracting Officer. Requests to work during other than these normal hours shall be made in writing at least 36 hours in advance. For example, a request to work on a Saturday shall be submitted no later than Thursday at noon.

1.13.2.2 Work Requiring Outages

Work requiring outages of utilities or building systems will be accomplished after normal working hours and/or on weekends in accordance with prior approved schedule(s).

1.13.3 Outages

Contractor's work requiring outages of utility systems or building systems will require 2 weeks' advance notice and will be subject to the approval of the Contracting Officer. Notice shall include type of outage, date, and time outage will commence and estimated duration of outage.

1.13.4 Rate to Charge Contractor

Water ---------- $1.09 per 1,000 gallons
Electricity ---------- $0.0577 per KW hour

NOTE: The Contractor will be responsible for all utility tie-ins, lines, meters, and disconnections for these utilities. These utilities are subject to the Contracting Officer's approval.

1.13.5 Disposition of Materials

All nonsalvable or unusable materials shall be disposed of off base as directed by the Contracting Officer. All waste material generated by any work under this contract shall be handled, transported, stored, and disposed of off base by the Contractor in accordance with all applicable Federal, State, or local laws, ordinances, regulations, court orders, or other types of rules or rulings having the effect of law.

1.13.6 Base Civil Engineering Work Clearance Request (AF Form 103)

The contractor shall obtain AF Form 103 prior to work commencement from the Contracting Officer. Upon receipt of an AF Form 103, the Contractor shall be responsible for locating and marking all base owned underground utilities, as well as coordinating local utility companies to stake out utilities if not owned by the base. Historical drawings, as-built drawings, and topographic drawings are available for review at the 4th Civil Engineering Squadron, Design element located in Building 3300. Base owned utilities include but are limited to electric, water, sewer, steam, communication, telephone, fiber optic, cathodic protection, and fuel lines. Utilities not owned by the base include but are limited to cable TV, Southern Bell Telephone, and natural gas. The Contractor shall contact JLOCO and the non-base utility companies for location services. In the event that the Contractor damages a utility which is commented in the plans, record drawings, or located by a utility locator, the Contractor shall repair/replace the utility at no additional cost to the Government. Utilities not documented, shown, or located by a locator shall be considered abandoned or unknown. Contractor damage to unknown or abandoned utilities shall be dealt with as a differing site condition.

1.13.7 Labeling of Storage Drums

All 55-gallon or larger drums brought on base for use under this contract and containing new material or used for storage of waste materials or hazardous waste must be labeled with a Department of Transportation (DOT) Proper Shipping Name, DOT Hazardous Identification Number, the Contractor's name, a Contractor representative, and the Contractor's telephone number. Label lettering should have a minimum height of 1/2 inch painted in white paint or other color that is in contrast with the color of the drum. The label should be sufficiently durable to equal or exceed the life (including storage and disposal) of the drum.

1.13.8 Contractor Storage Trailer(s) and Building(s)

The Contractor shall place a sign on all his storage trailer(s) and building(s) used on this contract. At a minimum, the sign shall contain the name of the Contractor and a telephone number at which the Contractor can be reached. The trailer(s) and building(s) shall be complete with gates and/or doors which can be locked. Only material for this project shall be stored in the trailer(s) or building(s). The Contractor shall

remove the storage trailer(s) or building(s) within 30 days after completion of the contract and prior to submitting his final invoice. The area around the storage trailer(s) and building(s) shall be kept clean. This includes the mowing of the grass during the growing season. The lawn mower shall be supplied by the Contractor.

The Contractor will be given a lot in the Contractor Storage Area on Collier Drive for the life of the contract. The Contractor's progress schedule shall include a line item (equal to 1%) for final cleanup of this storage lot. Final payment will not be made until this final cleanup is performed by the Contractor and accepted by Seymour Johnson AFB.

1.13.9 Continuity

All tools, labor and materials required to complete any item of work within a given work area or requiring an outage of any building utility or system shall be available at the site prior to commencement thereof. Once work has commenced on an item of work, said work shall be continuously and diligently performed to completion and acceptance. Breaks in work to be negotiated with the Contracting Officers Representative if other then Holidays.

1.14 COLOR BOARDS

Five sets of color boards shall be submitted, in addition to samples required elsewhere. Such submittals shall be made not later than 60 days prior to approval date required to achieve compliance with approved project schedule. Each set of boards shall include samples of colors and finishes of all exterior and interior building surfaces such as walls, toilet partitions, floors and ceilings. The samples will be presented on 8-inch by 10-1/2-inch boards (modules) with a maximum spread of 24 inches by 31-1/2 inches for foldouts. The modules shall be designed to fit in a standard looseleaf, three-ring binder. If more space is needed, more than one board per set may be submitted. The Contractor shall certify that he has reviewed the color samples in detail and that they are in strict accordance with the contract drawings and specifications, except as may be otherwise explicitly stated. If multiple material and finish (color) schemes are required, samples shall be identified by scheme and coordinated to room names and numbers shown on the architectural floor plans and room finish and color schedule. Submittal of the color boards shall not relieve the Contractor of the responsibility to submit the samples required by technical specifications. Color boards shall be an activity identified on the Contractor's schedule.

1.15 REQUEST FOR INFORMATION (RFI) SYSTEM

The Government has developed an electronic database, the Request for Information (RFI) System, to track and answer Contractor questions, requests for information and clarifications during construction. The use of the RFI System for all requests (the Contractor's as well as the subcontractors'/suppliers') is a contractual requirement for this project. The Contractor will enter the system over the Internet using a WEB browser such as Internet Explorer 5.0 or newer or Netscape 4.7 or newer and any Internet service provider. The Government will provide the Contractor a user identification and password for the system that will only allow the Contractor to enter and view the requests for this project. The Contractor will provide the Government the E-mail address for the individual(s) inputting into the system in order that E-mail messages can be sent from the Government to the Contractor indicating a response to the request. The

Government will provide instructions in the use of the RFI system. The Contractor must fill in seven fields in the Contractor Data portion of the RFI form, which include Date Required, Priority, Short Description, Problem Description, Recommended Action, Cost, and Time. The Government will be notified through an E-mail message that the Contractor has entered a request into the system. When the Government has answered the request, an E-mail message will be sent informing the Contractor that the answer to the request is in the system. The Contractor will enter the system to retrieve the answer using the same procedure to enter the question. The RFI System assigns a unique number to each request. The Contractor will not be reimbursed separately for the required use of this system. The Contractor shall include any costs associated with the use of this system into their bid.

1.16 PROGRESS PHOTOGRAPHS

The Contractor shall, during the progress of the project, furnish the Contracting Officer progress photographs and color digital images taken with a camera having no less than 2.8 meg-pixels image resolution to depict progress of construction. The electronic files shall be submitted in JPEG format on compact disk (CD); two copies of CDs are required. The Contractor shall submit glossy prints along with the electronic digital images. A qualified, established, commercial photographer shall perform the photographic work. The photographs shall be taken between the 1st and 5th day of each month and be delivered to the Contracting Officer not later than the 20th day of the same month taken. The photographs shall be taken from not less than six positions for each month as selected by the Contracting Officer. They shall show, inasmuch as practicable, work accomplished during the previous month. The photographs shall be 8-inch by 10-inch color glossy prints and the electronic files shall be no less then 3.68 inches high by 4.90 inches wide at full scale. Each photograph shall be identified showing date made, contract title and number and a brief description of work depicted and shall be sequentially numbered. The identifying data shall be placed on the back of the prints. The electronic files shall be numbered the same as the photographs; and the rest of the data with a brief description of the work depicted can be placed in a text file on the CD. No identifying data shall appear on the face of prints or in the viewing area of the electronic files. One copy of each photograph and the corresponding negative shall be furnished to the Contracting Officer by the time stipulated above. No separate payment will be made for these services and all costs in connection therewith shall be considered incidental to costs of the overall project.

1.17 CLEANUP

Construction debris, waste materials, packaging material and the like shall be removed from the work site daily. Any dirt or mud which is tracked onto paved or surfaced roadways shall be cleaned away. Materials resulting from demolition activities which are salvageable shall be stored within the fenced area described above or at the supplemental storage area. Stored material not in trailers, whether new or salvaged, shall be neatly stacked when stored.

1.18 RESTORATION OF STORAGE AREA

Upon completion of the project and after removal of trailers, materials, and equipment from within the fenced area, the fence shall be removed and will become the property of the Contractor. Areas used by the Contractor for the storage of equipment or material, or other use, shall be restored

to the original or better condition. Gravel used to traverse grassed areas shall be removed and the area restored to its original condition, including top soil and seeding as necessary.

PART 2 PRODUCTS (NOT APPLICABLE)
PART 3 EXECUTION (NOT APPLICABLE)

-- End of Section --

SECTION TABLE OF CONTENTS

DIVISION 01 - GENERAL REQUIREMENTS

SECTION 01572A

CONSTRUCTION AND DEMOLITION WASTE MANAGEMENT

04/01

PART 1 GENERAL

1.1 GOVERNMENT POLICY
1.2 MANAGEMENT
1.3 PLAN
1.4 RECORDS
1.5 COLLECTION
1.5.1 Source Separated Method.
1.5.2 Co-Mingled Method.
1.5.3 Other Methods.
1.6 DISPOSAL
1.6.1 Reuse.
1.6.2 Recycle.
1.6.3 Waste.

-- End of Section Table of Contents --

UFGS-01572A (April 2001)

SECTION 01572A

CONSTRUCTION AND DEMOLITION WASTE MANAGEMENT
04/01

PART 1 GENERAL

1.1 GOVERNMENT POLICY

Government policy is to apply sound environmental principles in the design, construction and use of facilities. As part of the implementation of that policy the Contractor shall: (1) practice efficient waste management when sizing, cutting, and installing products and materials and (2) use all reasonable means to divert construction and demolition waste from landfills and incinerators and to facilitate their recycling or reuse. The target amount to be delivered from the waste stream is 50 percent by weight or volume.

1.2 MANAGEMENT

The Contractor shall take a pro-active, responsible role in the management of construction and demolition waste and require all subcontractors, vendors, and suppliers to participate in the effort. Construction and demolition waste includes products of demolition or removal, excess or unusable construction materials, packaging materials for construction products, and other materials generated during the construction process but not incorporated into the work. In the management of waste consideration shall be given to the availability of viable markets, the condition of the material, the ability to provide the material in suitable condition and in a quantity acceptable to available markets, and time constraints imposed by internal project completion mandates. The Contractor shall be responsible for implementation of any special programs involving rebates or similar incentives related to recycling of waste. Revenues or other savings obtained for salvage, or recycling shall accrue to the Contractor. Firms and facilities used for recycling, reuse, and disposal shall be appropriately permitted for the intended use to the extent required by federal, state, and local regulations.

1.3 PLAN

A waste management plan shall be submitted within 15 days after contract award and prior to initiating any site preparation work. The plan shall include the following:

a. Name of individuals on the Contractor's staff responsible for waste prevention and management.

b. Actions that will be taken to reduce solid waste generation.

c. Description of the specific approaches to be used in recycling/reuse of the various materials generated, including the areas and equipment to be used for processing, sorting, and temporary storage of wastes.

d. Characterization, including estimated types and quantities, of the waste to be generated.

e. Name of landfill and/or incinerator to be used and the estimated costs for use, assuming that there would be no salvage or recycling on the project.

f. Identification of local and regional reuse programs, including non-profit organizations such as schools, local housing agencies, and organizations that accept used materials such as materials exchange networks and Habitat for Humanity.

g. List of specific waste materials that will be salvaged for resale, salvaged and reused, or recycled. Recycling facilities that will be used shall be identified.

h. Identification of materials that cannot be recycled/reused with an explanation or justification.

i. Anticipated net cost savings determined by subtracting Contractor program management costs and the cost of disposal from the revenue generated by sale of the materials and the incineration and/or landfill cost avoidance.

1.4 RECORDS

Records shall be maintained to document the quantity of waste generated; the quantity of waste diverted through sale, reuse, or recycling; and the quantity of waste disposed by landfill or incineration. The records shall be made available to the Contracting Officer during construction, and a copy of the records shall be delivered to the Contracting Officer upon completion of the construction.

1.5 COLLECTION

The necessary containers, bins and storage areas to facilitate effective waste management shall be provided and shall be clearly and appropriately identified. Recyclable materials shall be handled to prevent contamination of materials from incompatible products and materials and separated by one of the following methods:

1.5.1 Source Separated Method.

Waste products and materials that are recyclable shall be separated from trash and sorted into appropriately marked separate containers and then transported to the respective recycling facility for further processing.

1.5.2 Co-Mingled Method.

Waste products and recyclable materials shall be placed into a single container and then transported to a recycling facility where the recyclable materials are sorted and processed.

1.5.3 Other Methods.

Other methods proposed by the Contractor may be used when approved by the Contracting Officer.

1.6 DISPOSAL

Except as otherwise specified in other sections of the specifications, disposal shall be in accordance with the following:

1.6.1 Reuse.

First consideration shall be given to salvage for reuse since little or no re-processing is necessary for this method, and less pollution is created when items are reused in their original form. Sale or donation of waste suitable for reuse shall be considered. Salvaged materials, other than those specified in other sections to be salvaged and reinstalled, shall not be used in this project.

1.6.2 Recycle.

Waste materials not suitable for reuse, but having value as being recyclable, shall be made available for recycling whenever economically feasible.

1.6.3 Waste.

Materials with no practical use or economic benefit shall be disposed at a landfill or incinerator.

-- End of Section --

SECTION TABLE OF CONTENTS

DIVISION 01 - GENERAL REQUIREMENTS

SECTION 01670

RECYCLED / RECOVERED MATERIALS

12/01

PART 1 GENERAL

1.1 REFERENCES
1.2 OBJECTIVES
1.3 EPA DESIGNATED ITEMS INCORPORATED IN THE WORK
1.4 EPA PROPOSED ITEMS INCORPORATED IN THE WORK
1.5 EPA LISTED ITEMS USED IN CONDUCT OF THE WORK BUT NOT INCORPORATED IN THE WORK

-- End of Section Table of Contents --

UFGS-01670 (December 2001)

SECTION 01670

RECYCLED / RECOVERED MATERIALS

12/01

PART 1 GENERAL

1.1 REFERENCES

The publications listed below form a part of this specification to the extent referenced. The publications are referred to in the text by basic designation only.

U.S. NATIONAL ARCHIVES AND RECORDS ADMINISTRATION (NARA)

40 CFR 247	Comprehensive Procurement Guideline for Products Containing Recovered Materials

1.2 OBJECTIVES

Government procurement policy is to acquire, in a cost effective manner, items containing the highest percentage of recycled and recovered materials practicable consistent with maintaining a satisfactory level of competition without adversely affecting performance requirements or exposing suppliers' employees to undue hazards from the recovered materials. The Environmental Protection Agency (EPA) has designated certain items which must contain a specified percent range of recovered or recycled materials. EPA designated products specified in this contract comply with the stated policy and with the EPA guidelines. The Contractor shall make all reasonable efforts to use recycled and recovered materials in providing the EPA designated products and in otherwise utilizing recycled and recovered materials in the execution of the work.

a. Recovered and Recycled Materials: weighted average, 20 percent post-consumer or 40 percent post-industrial.

a. Locally or Regionally Obtained Materials: weighted average, in the aggregate, 20 percent

1.3 EPA DESIGNATED ITEMS INCORPORATED IN THE WORK

Various sections of the specifications contain requirements for materials that have been designated by EPA as being products which are or can be made with recovered or recycled materials. These items, when incorporated into the work under this contract, shall contain at least the specified percentage of recycled or recovered materials unless adequate justification (non-availability) for non-use is provided. When a designated item is specified as an option to a non-designated item, the designated item requirements apply only if the designated item is used in the work.

1.4 EPA PROPOSED ITEMS INCORPORATED IN THE WORK

Products other than those designated by EPA are still being researched and

are being considered for future Comprehensive Procurement Guideline (CPG) designation. It is recommended that these items, when incorporated in the work under this contract, contain the highest practicable percentage of recycled or recovered materials, provided specified requirements are also met.

1.5 EPA LISTED ITEMS USED IN CONDUCT OF THE WORK BUT NOT INCORPORATED IN THE WORK

There are many products listed in 40 CFR 247 which have been designated or proposed by EPA to include recycled or recovered materials that may be used by the Contractor in performing the work but will not be incorporated into the work. These products include office products, temporary traffic control products, and pallets. It is recommended that these non-construction products, when used in the conduct of the work, contain the highest practicable percentage of recycled or recovered materials and that these products be recycled when no longer needed.

-- End of Section --

SECTION TABLE OF CONTENTS

DIVISION 01 - GENERAL REQUIREMENTS

SECTION 01780A

CLOSEOUT SUBMITTALS

05/02

PART 1 GENERAL

1.1 SUBMITTALS
1.2 PROJECT RECORD DOCUMENTS
1.2.1 As-Built Drawings
1.2.1.1 Government Furnished Materials
1.2.1.2 Working As-Built and Final As-Built Drawings
1.2.1.3 Drawing Preparation
1.2.1.4 Computer Aided Design and Drafting (CADD) Drawings
1.2.1.5 Manually Prepared Drawings
1.2.1.6 Payment
1.2.2 As-Built Record of Equipment and Materials
1.2.3 Final Approved Shop Drawings
1.2.4 Construction Contract Specifications
1.2.5 Real Property Equipment
1.3 WARRANTY MANAGEMENT
1.3.1 Warranty Management Plan
1.3.2 Performance Bond
1.3.3 Pre-Warranty Conference
1.3.4 Contractor's Response to Construction Warranty Service Requirements
1.3.5 Warranty Tags
1.4 MECHANICAL TESTING, ADJUSTING, BALANCING, AND COMMISSIONING
1.5 OPERATION AND MAINTENANCE MANUALS
1.6 FINAL CLEANING

PART 2 PRODUCTS (NOT USED)

PART 3 EXECUTION (NOT USED)

-- End of Section Table of Contents --

UFGS-01780A (May 2002)

SECTION 01780A

CLOSEOUT SUBMITTALS
05/02

PART 1 GENERAL

1.1 SUBMITTALS

Government approval is required for submittals with a "G" designation; submittals not having a "G" designation are for information only. When used, a designation following the "G" designation identifies the office that will review the submittal for the Government. The following shall be submitted in accordance with Section 01330 SUBMITTAL PROCEDURES:

SD-02 Shop Drawings

As-Built Drawings; G, RE

Drawings showing final as-built conditions of the project. The final CADD as-built drawings shall consist of one set of electronic CADD drawing files in the specified format, one set of mylar drawings, 2 sets of blue-line prints of the mylars, and one set of the approved working as-built drawings.

SD-03 Product Data

As-Built Record of Equipment and Materials; G, RE

Two copies of the record listing the as-built materials and equipment incorporated into the construction of the project.

Warranty Management Plan; G, RE

One set of the warranty management plan containing information relevant to the warranty of materials and equipment incorporated into the construction project, including the starting date of warranty of construction. The Contractor shall furnish with each warranty the name, address, and telephone number of each of the guarantor's representatives nearest to the project location.

Warranty Tags

Two record copies of the warranty tags showing the layout and design.

Final Cleaning

Two copies of the listing of completed final clean-up items.

1.2 PROJECT RECORD DOCUMENTS

1.2.1 As-Built Drawings

This paragraph covers as-built drawings complete, as a requirement of the contract. The terms "drawings," "contract drawings," "drawing files," "working as-built drawings" and "final as-built drawings" refer to contract drawings which are revised to be used for final as-built drawings.

1.2.1.1 Government Furnished Materials

One set of electronic CADD files in the specified software and format revised to reflect all bid amendments will be provided by the Government at the preconstruction conference for projects requiring CADD file as-built drawings.

1.2.1.2 Working As-Built and Final As-Built Drawings

The Contractor shall revise 2 sets of paper drawings by red-line process to show the as-built conditions during the prosecution of the project. These working as-built marked drawings shall be kept current on a weekly basis and at least one set shall be available on the jobsite at all times. Changes from the contract plans which are made in the work or additional information which might be uncovered in the course of construction shall be accurately and neatly recorded as they occur by means of details and notes. Final as-built drawings shall be prepared after the completion of each definable feature of work as listed in the Contractor Quality Control Plan (Foundations, Utilities, Structural Steel, etc., as appropriate for the project). The working as-built marked prints and final as-built drawings will be jointly reviewed for accuracy and completeness by the Contracting Officer and the Contractor prior to submission of each monthly pay estimate. If the Contractor fails to maintain the working and final as-built drawings as specified herein, the Contracting Officer will deduct from the monthly progress payment an amount representing the estimated cost of maintaining the as-built drawings. This monthly deduction will continue until an agreement can be reached between the Contracting Officer and the Contractor regarding the accuracy and completeness of updated drawings. The working and final as-built drawings shall show, but shall not be limited to, the following information:

a. The actual location, kinds and sizes of all sub-surface utility lines. In order that the location of these lines and appurtenances may be determined in the event the surface openings or indicators become covered over or obscured, the as-built drawings shall show, by offset dimensions to two permanently fixed surface features, the end of each run including each change in direction. Valves, splice boxes and similar appurtenances shall be located by dimensioning along the utility run from a reference point. The average depth below the surface of each run shall also be recorded.

b. The location and dimensions of any changes within the building structure.

c. Correct grade, elevations, cross section, or alignment of roads, earthwork, structures or utilities if any changes were made from contract plans.

d. Changes in details of design or additional information obtained from working drawings specified to be prepared and/or furnished by the Contractor; including but not limited to fabrication, erection,

installation plans and placing details, pipe sizes, insulation material, dimensions of equipment foundations, etc.

e. The topography, invert elevations and grades of drainage installed or affected as part of the project construction.

f. Changes or modifications which result from the final inspection.

g. Where contract drawings or specifications present options, only the option selected for construction shall be shown on the final as-built prints.

h. If borrow material for this project is from sources on Government property, or if Government property is used as a spoil area, the Contractor shall furnish a contour map of the final borrow pit/spoil area elevations.

i. Systems designed or enhanced by the Contractor, such as HVAC controls, fire alarm, fire sprinkler, and irrigation systems.

j. Modifications (change order price shall include the Contractor's cost to change working and final as-built drawings to reflect modifications) and compliance with the following procedures.

(1) Directions in the modification for posting descriptive changes shall be followed.

(2) A Modification Circle shall be placed at the location of each deletion.

(3) For new details or sections which are added to a drawing, a Modification Circle shall be placed by the detail or section title.

(4) For minor changes, a Modification Circle shall be placed by the area changed on the drawing (each location).

(5) For major changes to a drawing, a Modification Circle shall be placed by the title of the affected plan, section, or detail at each location.

(6) For changes to schedules or drawings, a Modification Circle shall be placed either by the schedule heading or by the change in the schedule.

(7) The Modification Circle size shall be 1/2 inch diameter unless the area where the circle is to be placed is crowded. Smaller size circle shall be used for crowded areas.

1.2.1.3 Drawing Preparation

The as-built drawings shall be modified as may be necessary to correctly show the features of the project as it has been constructed by bringing the contract set into agreement with approved working as-built prints, and adding such additional drawings as may be necessary. These working as-built marked prints shall be neat, legible and accurate. These drawings are part of the permanent records of this project and shall be returned to the Contracting Officer after approval by the Government. Any drawings damaged or lost by the Contractor shall be satisfactorily replaced by the Contractor at no expense to the Government.

1.2.1.4 Computer Aided Design and Drafting (CADD) Drawings

Only personnel proficient in the preparation of CADD drawings shall be employed to modify the contract drawings or prepare additional new drawings. Additions and corrections to the contract drawings shall be equal in quality and detail to that of the originals. Line colors, line weights, lettering, layering conventions, and symbols shall be the same as the original line colors, line weights, lettering, layering conventions, and symbols. If additional drawings are required, they shall be prepared using the specified electronic file format applying the same graphic standards specified for original drawings. The title block and drawing border to be used for any new final as-built drawings shall be identical to that used on the contract drawings. Additions and corrections to the contract drawings shall be accomplished using CADD files. The Contractor will be furnished "as-designed" drawings in Microstation SE format compatible with a Windows NT operating system. The electronic files will be supplied on compact disc, read-only memory (CD-ROM). The Contractor shall be responsible for providing all program files and hardware necessary to prepare final as-built drawings. The Contracting Officer will review final as-built drawings for accuracy and the Contractor shall make required corrections, changes, additions, and deletions.

a. CADD colors shall be the "base" colors of red, green, and blue. Color code for changes shall be as follows:

(1) Deletions (red) - Deleted graphic items (lines) shall be colored red with red lettering in notes and leaders.

(2) Additions (Green) - Added items shall be drawn in green with green lettering in notes and leaders.

(3) Special (Blue) - Items requiring special information, coordination, or special detailing or detailing notes shall be in blue.

b. The Contract Drawing files shall be renamed in a manner related to the contract number (i.e., 98-C-10.DGN) as instructed in the Pre-Construction conference. Marked-up changes shall be made only to those renamed files. All changes shall be made on the layer/level as the original item. There shall be no deletions of existing lines; existing lines shall be over struck in red. Additions shall be in green with line weights the same as the drawing. Special notes shall be in blue on layer #63.

c. When final revisions have been completed, the cover sheet drawing shall show the wording "RECORD DRAWING AS-BUILT" followed by the name of the Contractor in letters at least 3/16 inch high. All other contract drawings shall be marked either "AS-Built" drawing denoting no revisions on the sheet or "Revised As-Built" denoting one or more revisions. Original contract drawings shall be dated in the revision block.

d. Within 10 days for contracts less than $5 million after Government approval of all of the working as-built drawings for a phase of work, the Contractor shall prepare the final CADD as-built drawings for that phase of work and submit two sets of blue-lined prints of these drawings for Government review and approval. The Government will promptly return one set of prints annotated with any necessary corrections. Within 7 days for contracts less than $5 million the Contractor shall revise the CADD files accordingly at no additional cost and submit one set of final prints for

the completed phase of work to the Government. Within 10 days for contracts less than $5 million of substantial completion of all phases of work, the Contractor shall submit the final as-built drawing package for the entire project. The submittal shall consist of one set of electronic files on compact disc, read-only memory (CD-ROM), one set of mylars, two sets of blue-line prints and one set of the approved working as-built drawings. They shall be complete in all details and identical in form and function to the contract drawing files supplied by the Government. Any transactions or adjustments necessary to accomplish this is the responsibility of the Contractor. The Government reserves the right to reject any drawing files it deems incompatible with the customer's CADD system. Paper prints, drawing files and storage media submitted will become the property of the Government upon final approval. Failure to submit final as-built drawing files and marked prints as specified shall be cause for withholding any payment due the Contractor under this contract. Approval and acceptance of final as-built drawings shall be accomplished before final payment is made to the Contractor.

1.2.1.5 Manually Prepared Drawings

Only personnel proficient in the preparation of manually prepared drawings shall be employed to modify the original contract drawing or prepare additional new drawings. Additions and corrections to the contract drawings shall be neat, clean and legible, shall be done to the same level of detail, and shall match the adjacent existing line work, and lettering being annotated in type, density, size and style. Drafting work shall be done using the same medium (pencil, plastic lead or ink) that was employed on the original contract drawings and with graphite lead on paper base material. The Contracting Officer will review as-built drawings for accuracy and conformance to the above specified drafting standards. Corrections, changes, additions, and deletions required shall meet these standards. The title block to be used for any new as-built drawings shall be similar to that used on the original drawings.

a. When final revisions have been completed, each drawing shall be lettered or stamped with the words "RECORD DRAWING AS-BUILT" followed by the name of the Contractor in letters at least 3/16 inch high. Original contract drawings shall be marked either "As-Built" drawings denoting no revisions on the sheet or "Revised As-Built" denoting one or more revisions All original contract drawings shall be dated in the revision block.

b. Within10 days for contracts less than $5 million after Government approval of all of the working as-built drawings for a phase of work, the Contractor shall prepare the final as-built drawings for that phase of work and submit two sets of blue-line prints of these drawings for Government review and approval. The Government will promptly return one set of prints annotated with any necessary corrections. Within 7 days for contracts less than $5 million the Contractor shall revise the drawings accordingly at no additional cost and submit one set of final prints for the completed phase of work to the Government. Within 10 days for contracts less than $5 million of substantial completion of all phases of work, the Contractor shall submit the final as-built drawing package for the entire project. The submittal shall consist of the completed final as-built drawings, two blue-line prints of these drawings and the return of the approved marked as-built prints. The drawings shall be complete in all details. Paper prints and reproducible drawings will become the property of the Government upon final approval. Failure to submit final as-built drawings and marked prints, as required herein, will be cause for withholding any payment due the Contractor under this contract. Approval and acceptance of final

as-built drawings shall be accomplished before final payment is made to the Contractor.

1.2.1.6 Payment

No separate payment will be made for as-built drawings required under this contract, and all costs accrued in connection with such drawings shall be considered a subsidiary obligation of the Contractor.

1.2.2 As-Built Record of Equipment and Materials

The Contractor shall furnish one copy of preliminary record of equipment and materials used on the project 15 days prior to final inspection. This preliminary submittal will be reviewed and returned 2 days after final inspection with Government comments. Two sets of final record of equipment and materials shall be submitted 10 days after final inspection. The designations shall be keyed to the related area depicted on the contract drawings. The record shall list the following data:

RECORD OF DESIGNATED EQUIPMENT AND MATERIALS DATA

Description	Specification Section	Manufacturer and Catalog, Model, and Serial Number	Composition and Size	Where Used

1.2.3 Final Approved Shop Drawings

The Contractor shall furnish final approved project shop drawings 30 days after transfer of the completed facility.

1.2.4 Construction Contract Specifications

The Contractor shall furnish final as-built construction contract specifications, including modifications thereto, 30 days after transfer of the completed facility.

1.2.5 Real Property Equipment

The Contractor shall furnish a list of installed equipment furnished under this contract. The list shall include all information usually listed on manufacturer's name plate. The "EQUIPMENT-IN-PLACE LIST" shall include, as applicable, the following for each piece of equipment installed: description of item, location (by room number), model number, serial number, capacity, name and address of manufacturer, name and address of equipment supplier, condition, spare parts list, manufacturer's catalog, and warranty. A draft list shall be furnished at time of transfer. The final list shall be furnished 30 days after transfer of the completed facility.

1.3 WARRANTY MANAGEMENT

1.3.1 Warranty Management Plan

The Contractor shall develop a warranty management plan which shall contain information relevant to the clause Warranty of Construction in DFARS. At least 30 days before the planned pre-warranty conference, the Contractor shall submit the warranty management plan for Government approval. The warranty management plan shall include all required actions and documents

to assure that the Government receives all warranties to which it is entitled. The plan shall be in narrative form and contain sufficient detail to render it suitable for use by future maintenance and repair personnel, whether tradesmen, or of engineering background, not necessarily familiar with this contract. The term "status" as indicated below shall include due date and whether item has been submitted or was accomplished. Warranty information made available during the construction phase shall be submitted to the Contracting Officer for approval prior to each monthly pay estimate. Approved information shall be assembled in a binder and shall be turned over to the Government upon acceptance of the work. The construction warranty period shall begin on the date of project acceptance and shall continue for the full product warranty period. A joint 4 month and 9 month warranty inspection shall be conducted, measured from time of acceptance, by the Contractor, Contracting Officer and the Customer Representative. Information contained in the warranty management plan shall include, but shall not be limited to, the following:

a. Roles and responsibilities of all personnel associated with the warranty process, including points of contact and telephone numbers within the organizations of the Contractors, subcontractors, manufacturers or suppliers involved.

b. Listing and status of delivery of all Certificates of Warranty for extended warranty items, to include roofs, HVAC balancing, pumps, motors, transformers, and for all commissioned systems such as fire protection and alarm systems, sprinkler systems, lightning protection systems, etc.

c. A list for each warranted equipment, item, feature of construction or system indicating:

1. Name of item.
2. Model and serial numbers.
3. Location where installed.
4. Name and phone numbers of manufacturers or suppliers.
5. Names, addresses and telephone numbers of sources of spare parts.
6. Warranties and terms of warranty. This shall include one-year overall warranty of construction. Items which have extended warranties shall be indicated with separate warranty expiration dates.
7. Cross-reference to warranty certificates as applicable.
8. Starting point and duration of warranty period.
9. Summary of maintenance procedures required to continue the warranty in force.
10. Cross-reference to specific pertinent Operation and Maintenance manuals.
11. Organization, names and phone numbers of persons to call for warranty service.
12. Typical response time and repair time expected for various warranted equipment.

d. The Contractor's plans for attendance at the 4 and 9 month post-construction warranty inspections conducted by the Government.

e. Procedure and status of tagging of all equipment covered by extended warranties.

f. Copies of instructions to be posted near selected pieces of equipment where operation is critical for warranty and/or safety reasons.

1.3.2 Performance Bond

The Contractor's Performance Bond shall remain effective throughout the construction period.

a. In the event the Contractor fails to commence and diligently pursue any construction warranty work required, the Contracting Officer will have the work performed by others, and after completion of the work, will charge the remaining construction warranty funds of expenses incurred by the Government while performing the work, including, but not limited to administrative expenses.

b. In the event sufficient funds are not available to cover the construction warranty work performed by the Government at the Contractor's expense, the Contracting Officer will have the right to recoup expenses from the bonding company.

c. Following oral or written notification of required construction warranty repair work, the Contractor shall respond in a timely manner. Written verification will follow oral instructions. Failure of the Contractor to respond will be cause for the Contracting Officer to proceed against the Contractor.

1.3.3 Pre-Warranty Conference

Prior to contract completion, and at a time designated by the Contracting Officer, the Contractor shall meet with the Contracting Officer to develop a mutual understanding with respect to the requirements of this section. Communication procedures for Contractor notification of construction warranty defects, priorities with respect to the type of defect, reasonable time required for Contractor response, and other details deemed necessary by the Contracting Officer for the execution of the construction warranty shall be established/reviewed at this meeting. In connection with these requirements and at the time of the Contractor's quality control completion inspection, the Contractor shall furnish the name, telephone number and address of a licensed and bonded company which is authorized to initiate and pursue construction warranty work action on behalf of the Contractor. This point of contact will be located within the local service area of the warranted construction, shall be continuously available, and shall be responsive to Government inquiry on warranty work action and status. This requirement does not relieve the Contractor of any of its responsibilities in connection with other portions of this provision.

1.3.4 Contractor's Response to Construction Warranty Service Requirements

Following oral or written notification by the Contracting Officer, the Contractor shall respond to construction warranty service requirements in accordance with the "Construction Warranty Service Priority List" and the three categories of priorities listed below. The Contractor shall submit a report on any warranty item that has been repaired during the warranty period. The report shall include the cause of the problem, date reported, corrective action taken, and when the repair was completed. If the Contractor does not perform the construction warranty within the timeframes specified, the Government will perform the work and backcharge the construction warranty payment item established.

a. First Priority Code 1. Perform onsite inspection to evaluate situation, and determine course of action within 4 hours, initiate work

within 6 hours and work continuously to completion or relief.

b. Second Priority Code 2. Perform onsite inspection to evaluate situation, and determine course of action within 8 hours, initiate work within 24 hours and work continuously to completion or relief.

c. Third Priority Code 3. All other work to be initiated within 3 work days and work continuously to completion or relief.

d. The "Construction Warranty Service Priority List" is as follows:

Code 1-Air Conditioning Systems
(1) Recreational support.
(2) Air conditioning leak in part of building, if causing damage.
(3) Air conditioning system not cooling properly.

Code 1-Doors
(1) Overhead doors not operational, causing a security, fire, or safety problem.
(2) Interior, exterior personnel doors or hardware, not functioning properly, causing a security, fire, or safety problem.

Code 3-Doors
(1) Overhead doors not operational.
(2) Interior/exterior personnel doors or hardware not functioning properly.

Code 1-Electrical
(1) Power failure (entire area or any building operational after 1600 hours).
(2) Security lights
(3) Smoke detectors

Code 2-Electrical
(1) Power failure (no power to a room or part of building).
(2) Receptacle and lights (in a room or part of building).

Code 3-Electrical
Street lights.

Code 1-Gas
(1) Leaks and breaks.
(2) No gas to family housing unit or cantonment area.

Code 1-Heat
(1). Area power failure affecting heat.
(2). Heater in unit not working.

Code 2-Kitchen Equipment
(1) Dishwasher not operating properly.
(2) All other equipment hampering preparation of a meal.

Code 1-Plumbing
(1) Hot water heater failure.
(2) Leaking water supply pipes.

Code 2-Plumbing
(1) Flush valves not operating properly.
(2) Fixture drain, supply line to commode, or any water pipe

leaking.
(3) Commode leaking at base.

Code 3 -Plumbing
Leaky faucets.

Code 3-Interior
(1) Floors damaged.
(2) Paint chipping or peeling.
(3) Casework.

Code 1-Roof Leaks
Temporary repairs will be made where major damage to property is occurring.

Code 2-Roof Leaks
Where major damage to property is not occurring, check for location of leak during rain and complete repairs on a Code 2 basis.

Code 2-Water (Exterior)
No water to facility.

Code 2-Water (Hot)
No hot water in portion of building listed.

Code 3-All other work not listed above.

1.3.5 Warranty Tags

At the time of installation, each warranted item shall be tagged with a durable, oil and water resistant tag approved by the Contracting Officer. Each tag shall be attached with a copper wire and shall be sprayed with a silicone waterproof coating. The date of acceptance and the QC signature shall remain blank until project is accepted for beneficial occupancy. The tag shall show the following information.

a. Type of product/material_____.

b. Model number_____.

c. Serial number_____.

d. Contract number_____.

e. Warranty period_____from_____to_____.

f. Inspector's signature_____.

g. Construction Contractor_____.

Address_____.

Telephone number_____.

h. Warranty contact_____.

Address_____.

Telephone number_____.

i. Warranty response time priority code_____.

j. WARNING - PROJECT PERSONNEL TO PERFORM ONLY OPERATIONAL MAINTENANCE DURING THE WARRANTY PERIOD.

1.4 MECHANICAL TESTING, ADJUSTING, BALANCING, AND COMMISSIONING

Prior to final inspection and transfer of the completed facility; all reports, statements, certificates, and completed checklists for testing, adjusting, balancing, and commissioning of mechanical systems shall be submitted to and approved by the Contracting Officer as specified in applicable technical specification sections.

1.5 OPERATION AND MAINTENANCE MANUALS

Operation manuals and maintenance manuals shall be submitted as specified. Operation manuals and maintenance manuals provided in a common volume shall be clearly differentiated and shall be separately indexed.

1.6 FINAL CLEANING

The premises shall be left broom clean. Stains, foreign substances, and temporary labels shall be removed from surfaces. Carpet and soft surfaces shall be vacuumed. Equipment and fixtures shall be cleaned to a sanitary condition. Filters of operating equipment shall be replaced. Debris shall be removed from roofs, drainage systems, gutters, and downspouts. Paved areas shall be swept and landscaped areas shall be raked clean. The site shall have waste, surplus materials, and rubbish removed. The project area shall have temporary structures, barricades, project signs, stirage and construction facilities removed. A list of completed clean-up items shall be submitted on the day of final inspection.

PART 2 PRODUCTS (NOT USED)

PART 3 EXECUTION (NOT USED)

-- End of Section --

SECTION TABLE OF CONTENTS

DIVISION 01 - GENERAL REQUIREMENTS

SECTION 01781

OPERATION AND MAINTENANCE DATA

12/01

PART 1 GENERAL

1.1 SUBMISSION OF OPERATION AND MAINTENANCE DATA
1.1.1 Package Quality
1.1.2 Package Content
1.1.3 Changes to Submittals
1.2 TYPES OF INFORMATION REQUIRED IN O&M DATA PACKAGES
1.2.1 Operating Instructions
1.2.1.1 Safety Precautions
1.2.1.2 Operator Prestart
1.2.1.3 Startup, Shutdown, and Post-Shutdown Procedures
1.2.1.4 Normal Operations
1.2.1.5 Emergency Operations
1.2.1.6 Operator Service Requirements
1.2.1.7 Environmental Conditions
1.2.2 Preventive Maintenance
1.2.2.1 Lubrication Data
1.2.2.2 Preventive Maintenance Plan and Schedule
1.2.3 Corrective Maintenance (Repair)
1.2.3.1 Troubleshooting Guides and Diagnostic Techniques
1.2.3.2 Wiring Diagrams and Control Diagrams
1.2.3.3 Maintenance and Repair Procedures
1.2.3.4 Removal and Replacement Instructions
1.2.3.5 Spare Parts and Supply Lists
1.2.4 Corrective Maintenance Work-Hours
1.2.5 Appendices
1.2.6 Parts Identification
1.2.6.1 Warranty Information
1.2.6.2 Personnel Training Requirements
1.2.6.3 Testing Equipment and Special Tool Information
1.2.6.4 Contractor Information
1.3 SCHEDULE OF OPERATION AND MAINTENANCE DATA PACKAGES
1.3.1 Data Package 1
1.3.2 Data Package 2
1.3.3 Data Package 4

PART 2 PRODUCTS

PART 3 EXECUTION

-- End of Section Table of Contents --

UFGS-01781 (December 2001)

SECTION 01781

OPERATION AND MAINTENANCE DATA
12/01

PART 1 GENERAL

1.1 SUBMISSION OF OPERATION AND MAINTENANCE DATA

Submit Operation and Maintenance (O&M) Data specifically applicable to this contract and a complete and concise depiction of the provided equipment, product, or system. Organize and present information in sufficient detail to clearly explain O&M requirements at the system, equipment, component, and subassembly level. Include an index preceding each submittal. Submit in accordance with this section and Section 01330, "Submittal Procedures."

1.1.1 Package Quality

Documents must be fully legible. Poor quality copies and material with hole punches obliterating the text or drawings will not be accepted.

1.1.2 Package Content

Data package content shall be as shown in the paragraph titled "Schedule of Operation and Maintenance Data Packages." Comply with the data package requirements specified in the individual technical sections, including the content of the packages and addressing each product, component, and system designated for data package submission.

1.1.3 Changes to Submittals

Manufacturer-originated changes or revisions to submitted data shall be furnished by the Contractor if a component of an item is so affected subsequent to acceptance of the O&M Data. Changes, additions, or revisions required by the Contracting Officer for final acceptance of submitted data, shall be submitted by the Contractor within 30 calendar days of the notification of this change requirement.

1.2 TYPES OF INFORMATION REQUIRED IN O&M DATA PACKAGES

1.2.1 Operating Instructions

Include specific instructions, procedures, and illustrations for the following phases of operation:

1.2.1.1 Safety Precautions

List personnel hazards and equipment or product safety precautions for all operating conditions.

1.2.1.2 Operator Prestart

Include procedures required to set up and prepare each system for use.

1.2.1.3 Startup, Shutdown, and Post-Shutdown Procedures

Provide narrative description for Startup, Shutdown and Post-shutdown operating procedures including the control sequence for each procedure.

1.2.1.4 Normal Operations

Provide narrative description of Normal Operating Procedures. Include Control Diagrams with data to explain operation and control of systems and specific equipment.

1.2.1.5 Emergency Operations

Include Emergency Procedures for equipment malfunctions to permit a short period of continued operation or to shut down the equipment to prevent further damage to systems and equipment. Include Emergency Shutdown Instructions for fire, explosion, spills, or other foreseeable contingencies. Provide guidance and procedures for emergency operation of all utility systems including required valve positions, valve locations and zones or portions of systems controlled.

1.2.1.6 Operator Service Requirements

Include instructions for services to be performed by the operator such as lubrication, adjustment, inspection, and recording gage readings.

1.2.1.7 Environmental Conditions

Include a list of Environmental Conditions (temperature, humidity, and other relevant data) that are best suited for the operation of each product, component or system. Describe conditions under which the item equipment should not be allowed to run.

1.2.2 Preventive Maintenance

Include the following information for preventive and scheduled maintenance to minimize corrective maintenance and repair.

1.2.2.1 Lubrication Data

Include preventative maintenance lubrication data, in addition to instructions for lubrication provided under paragraph titled "Operator Service Requirements":

a. A table showing recommended lubricants for specific temperature ranges and applications.

b. Charts with a schematic diagram of the equipment showing lubrication points, recommended types and grades of lubricants, and capacities.

c. A Lubrication Schedule showing service interval frequency.

1.2.2.2 Preventive Maintenance Plan and Schedule

Include manufacturer's schedule for routine preventive maintenance, inspections, tests and adjustments required to ensure proper and economical operation and to minimize corrective maintenance. Provide manufacturer's projection of preventive maintenance work-hours on a daily, weekly,

monthly, and annual basis including craft requirements by type of craft. For periodic calibrations, provide manufacturer's specified frequency and procedures for each separate operation.

1.2.3 Corrective Maintenance (Repair)

Include manufacturer's recommended procedures and instructions for correcting problems and making repairs.

1.2.3.1 Troubleshooting Guides and Diagnostic Techniques

Include step-by-step procedures to promptly isolate the cause of typical malfunctions. Describe clearly why the checkout is performed and what conditions are to be sought. Identify tests or inspections and test equipment required to determine whether parts and equipment may be reused or require replacement.

1.2.3.2 Wiring Diagrams and Control Diagrams

Wiring diagrams and control diagrams shall be point-to-point drawings of wiring and control circuits including factory-field interfaces. Provide a complete and accurate depiction of the actual job specific wiring and control work. On diagrams, number electrical and electronic wiring and pneumatic control tubing and the terminals for each type, identically to actual installation configuration and numbering.

1.2.3.3 Maintenance and Repair Procedures

Include instructions and alist of tools required to repair or restore the product or equipment to proper condition or operating standards.

1.2.3.4 Removal and Replacement Instructions

Include step-by-step procedures and a list required tools and supplies for removal, replacement, disassembly, and assembly of components, assemblies, subassemblies, accessories, and attachments. Provide tolerances, dimensions, settings and adjustments required. Instructions shall include a combination of text and illustrations.

1.2.3.5 Spare Parts and Supply Lists

Include lists of spare parts and supplies required for maintenance and repair to ensure continued service or operation without unreasonable delays. Special consideration is required for facilities at remote locations. List spare parts and supplies that have a long lead-time to obtain.

1.2.4 Corrective Maintenance Work-Hours

Include manufacturer's projection of corrective maintenance work-hours including requirements by type of craft. Corrective maintenance that requires completion or participation of the equipment manufacturer shall be identified and tabulated separately.

1.2.5 Appendices

Provide information required below and information not specified in the preceding paragraphs but pertinent to the maintenance or operation of the product or equipment. Include the following:

1.2.6 Parts Identification

Provide identification and coverage for all parts of each component, assembly, subassembly, and accessory of the end items subject to replacement. Include special hardware requirements, such as requirement to use high-strength bolts and nuts. Identify parts by make, model, serial number, and source of supply to allow reordering without further identification. Provide clear and legible illustrations, drawings, and exploded views to enable easy identification of the items. When illustrations omit the part numbers and description, both the illustrations and separate listing shall show the index, reference, or key number that will cross-reference the illustrated part to the listed part. Parts shown in the listings shall be grouped by components, assemblies, and subassemblies in accordance with the manufacturer's standard practice. Parts data may cover more than one model or series of equipment, components, assemblies, subassemblies, attachments, or accessories, such as typically shown in a master parts catalog

1.2.6.1 Warranty Information

List and explain the various warranties and include the servicing and technical precautions prescribed by the manufacturers or contract documents in order to keep warranties in force. Include warranty information for primary components such as the compressor of air conditioning system.

1.2.6.2 Personnel Training Requirements

Provide information available from the manufacturers that is needed for use in training designated personnel to properly operate and maintain the equipment and systems.

1.2.6.3 Testing Equipment and Special Tool Information

Include information on test equipment required to perform specified tests and on special tools needed for the operation, maintenance, and repair of components.

1.2.6.4 Contractor Information

Provide a list that includes the name, address, and telephone number of the General Contractor and each Subcontractor who installed the product or equipment, or system. For each item, also provide the name address and telephone number of the manufacturer's representative and service organization most convenient to the project site. Provide the name, address, and telephone number of the product, equipment, and system manufacturers.

1.3 SCHEDULE OF OPERATION AND MAINTENANCE DATA PACKAGES

Furnish the O&M data packages specified in individual technical sections. The required information for each O&M data package is as follows:

1.3.1 Data Package 1

a. Safety precautions

b. Maintenance and repair procedures

c. Warranty information

d. Contractor information

e. Spare parts and supply list

1.3.2 Data Package 2

a. Safety precautions

b. Normal operations

c. Environmental conditions

d. Lubrication data

e. Preventive maintenance plan and schedule

f. Maintenance and repair procedures

g. Removal and replacement instructions

h. Spare parts and supply list

i. Parts identification

j. Warranty information

k. Contractor information

1.3.3 Data Package 4

a. Safety precautions

b. Operator prestart

c. Startup, shutdown, and post-shutdown procedures

d. Normal operations

e. Emergency operations

f. Operator service requirements

g. Environmental conditions

h. Lubrication data

i. Preventive maintenance plan and schedule

j. Troubleshooting guides and diagnostic techniques

k. Wiring diagrams and control diagrams

l. Maintenance and repair procedures

m. Removal and replacement instructions

n. Spare parts and supply list

o. Corrective maintenance man-hours

p. Parts identification

q. Warranty information

r. Personnel training requirements

s. Testing equipment and special tool information

t. Contractor information

PART 2 PRODUCTS

Not used.

PART 3 EXECUTION

Not used.

-- End of Section --

SECTION TABLE OF CONTENTS

DIVISION 02 - SITE CONSTRUCTION

SECTION 02220

DEMOLITION

05/02

PART 1 GENERAL

1.1 REFERENCES
1.2 GENERAL REQUIREMENTS
1.3 SUBMITTALS
1.4 REGULATORY AND SAFETY REQUIREMENTS
1.4.1 Notifications
1.4.2 Receipts
1.5 DUST AND DEBRIS CONTROL
1.6 PROTECTION
1.6.1 Traffic Control Signs
1.6.2 Existing Work
1.6.3 Weather Protection
1.6.4 Trees
1.6.5 Facilities
1.6.6 Protection of Personnel
1.7 BURNING
1.8 OMITTED
1.9 RELOCATIONS
1.10 Required Data
1.11 Environmental Protection
1.12 USE OF EXPLOSIVES
1.13 AVAILABILITY OF WORK AREAS

PART 2 PRODUCTS

PART 3 EXECUTION

3.1 EXISTING FACILITIES TO BE REMOVED
3.1.1 Structures
3.1.2 Utilities and Related Equipment
3.1.3 Paving and Slabs
3.1.4 Omitted
3.1.5 Omitted
3.1.6 Omitted
3.1.7 Omitted
3.1.8 Patching
3.1.9 Omitted
3.1.10 Cylinders and Canisters
3.2 FILLING
3.3 DISPOSITION OF MATERIAL
3.3.1 Title to Materials
3.3.2 Reuse of Materials and Equipment
3.3.3 Omitted
3.3.4 Omitted
3.3.5 Omitted
3.3.6 Unsalvageable Material

3.4 CLEANUP
3.4.1 Debris and Rubbish

-- End of Section Table of Contents --

UFGS-02220 (May 2002)

SECTION 02220

DEMOLITION
05/02

PART 1 GENERAL

1.1 REFERENCES

The publications listed below form a part of this specification to the extent referenced. The publications are referred to in the text by the basic designation only.

AMERICAN NATIONAL STANDARDS INSTITUTE (ANSI)

ANSI A10.6	(1990) Safety Requirements for Demolition Operations

AIR CONDITIONING AND REFRIGERATION INSTITUTE (ARI)

ARI Guideline K	(1997) Containers for Recovered Fluorocarbon Refrigerants

U.S. NATIONAL ARCHIVES AND RECORDS ADMINISTRATION (NARA)

40 CFR 61-SUBPART M	National Emission Standard for Asbestos
40 CFR 82	Protection of Stratospheric Ozone; Refrigerant Recycling
49 CFR 173.301	Shipment of Compressed Gas Cylinders

U.S. DEFENSE LOGISTICS AGENCY (DLA)

DLA 4145.25	(June 2000) Storage and Handling of Liquefied and Compressed Gases and Their Full and Empty Cylinders

U.S. DEPARTMENT OF DEFENSE (DOD)

DOD 4000.25-1-M	Requisitioning and Issue Procedures
MIL-STD-129	(Rev. N) Marking for Shipment and Storage

U.S. ARMY CORPS OF ENGINEERS (USACE)

EM 385-1-1	(1996) U.S. Army Corps of Engineers Safety and Health Requirements Manual

1.2 GENERAL REQUIREMENTS

Do not begin demolition until authorization is received from the Contracting Officer. Remove rubbish and debris from the project site; do not allow accumulations outside the buildings. In the interest of occupational safety and health, the work shall be performed in accordance

with EM 385-1-1, Section 23, Demolition, and other applicable Sections. In the interest of conservation, salvage shall be pursued to the maximum extent possible (in accordance with Section 01572A CONSTRUCTION AND DEMOLITION WASTE MANAGEMENT, if applicable; salvaged items and materials shall be disposed of as specified.

1.3 SUBMITTALS

Government approval is required for submittals with a "G" designation; submittals not having a "G" designation are for information only or as otherwise designated. When used, a designation following the "G" designation identifies the office that will review the submittal for the Government. The following shall be submitted in accordance with Section 01330 SUBMITTAL PROCEDURES:

SD-03 Product Data

Work Plan; G

The procedures proposed for the accomplishment of the work. The procedures shall provide for safe conduct of the work, including procedures and methods to provide necessary supports, lateral bracing and shoring when required, careful removal and disposition of materials specified to be salvaged, protection of property which is to remain undisturbed, coordination with other work in progress, and timely disconnection of utility services. The procedures shall include a detailed description of the methods and equipment to be used for each operation, and the sequence of operations in accordance with EM 385-1-1.

SD-07 Certificates

Demolition plan; G

Notifications; G

Submit proposed salvage, demolition and removal procedures for approval before work is started.

SD-11 Closeout Submittals

Receipts

1.4 REGULATORY AND SAFETY REQUIREMENTS

Comply with federal, state, and local hauling and disposal regulations. In addition to the requirements of the "Contract Clauses," safety requirements shall conform with ANSI A10.6.

1.4.1 Notifications

Furnish timely notification of demolition projects to Federal, State, regional, and local authorities in accordance with 40 CFR 61-SUBPART M. Notify the Regional Office of the United States Environmental Protection Agency (USEPA), State's environmental protection agency local air pollution control district/agency, and the Contracting Officer in writing 10 working days prior to the commencement of work in accordance with 40 CFR 61-SUBPART M.

1.4.2 Receipts

Submit a shipping receipt or bill of lading for all containers of ozone depleting substance (ODS) shipped to the Defense Depot, Richmond, Virginia.

1.5 DUST AND DEBRIS CONTROL

Prevent the spread of dust and debris and avoid the creation of a nuisance or hazard in the surrounding area. Do not use water if it results in hazardous or objectionable conditions such as, but not limited to, ice, flooding, or pollution.

1.6 PROTECTION

1.6.1 Traffic Control Signs

Where pedestrian and driver safety is endangered in the area of removal work, use traffic barricades with flashing lights. Notify the Contracting Officer prior to beginning such work.

1.6.2 Existing Work

Before beginning any demolition work, the Contractor shall survey the site and examine the drawings and specifications to determine the extent of the work. The Contractor shall take necessary precautions to avoid damage to existing items to remain in place, to be reused, or to remain the property of the Government; any damaged items shall be repaired or replaced as approved by the Contracting Officer. The Contractor shall coordinate the work of this section with all other work and shall construct and maintain shoring, bracing, and supports as required. The Contractor shall ensure that structural elements are not overloaded and shall be responsible for increasing structural supports or adding new supports as may be required as a result of any cutting, removal, or demolition work performed under this contract. Do not overload pavements to remain. Provide new supports and reinforcement for existing construction weakened by demolition or removal work. Repairs, reinforcement, or structural replacement must have Contracting Officer approval.

1.6.3 Weather Protection

For portions of the building to remain, protect building interior and materials and equipment from the weather at all times. Where removal of existing roofing is necessary to accomplish work, have materials and workmen ready to provide adequate and temporary covering of exposed areas so as to ensure effectiveness and to prevent displacement.

1.6.4 Trees

Trees within the project site which might be damaged during demolition, and which are indicated to be left in place, shall be protected by a 6 foot high fence. The fence shall be securely erected a minimum of 5 feet from the trunk of individual trees or follow the outer perimeter of branches or clumps of trees. Any tree designated to remain that is damaged during the work under this contract shall be replaced in kind or as approved by the Contracting Officer.

1.6.5 Facilities

Protect electrical and mechanical services and utilities. Where removal of

existing utilities and pavement is specified or indicated, provide approved barricades, temporary covering of exposed areas, and temporary services or connections for electrical and mechanical utilities. Floors, roofs, walls, columns, pilasters, and other structural components that are designed and constructed to stand without lateral support or shoring, and are determined to be in stable condition, shall remain standing without additional bracing, shoring, of lateral support until demolished, unless directed otherwise by the Contracting Officer. The Contractor shall ensure that no elements determined to be unstable are left unsupported and shall be responsible for placing and securing bracing, shoring, or lateral supports as may be required as a result of any cutting, removal, or demolition work performed under this contract.

1.6.6 Protection of Personnel

During the demolition work the Contractor shall continuously evaluate the condition of the structure being demolished and take immediate action to protect all personnel working in and around the demolition site. No area, section, or component of floors, roofs, walls, columns, pilasters, or other structural element will be allowed to be left standing without sufficient bracing, shoring, or lateral support to prevent collapse or failure while workmen remove debris or perform other work in the immediate area.

1.7 BURNING

The use of burning at the project site for the disposal of refuse and debris will not be permitted.

1.8 OMITTED

1.9 RELOCATIONS

Perform the removal and reinstallation of relocated items as indicated with workmen skilled in the trades involved. Repair items to be relocated which are damaged or replace damaged items with new undamaged items as approved by the Contracting Officer.

1.10 Required Data

Demolition plan shall include procedures for careful removal and disposition of materials specified to be salvaged, coordination with other work in progress, a disconnection schedule of utility services, and airfield lighting, a detailed description of methods and equipment to be used for each operation and of the sequence of operations.

1.11 Environmental Protection

The work shall comply with the requirements of Section 01355A ENVIRONMENTAL PROTECTION.

1.12 USE OF EXPLOSIVES

Use of explosives will not be permitted.

1.13 AVAILABILITY OF WORK AREAS

Areas in which the work is to be accomplished will be available in accordance with the following schedule:

Area	Date
ALL	SEE DIVISION 01

PART 2 PRODUCTS

Not used.

PART 3 EXECUTION

3.1 EXISTING FACILITIES TO BE REMOVED

3.1.1 Structures

Existing structures indicated shall be removed to 3 feet below grade. Interior walls, other than retaining walls and partitions, shall be removed to 3 feet below grade or to top of concrete slab on ground. Basement slabs shall be broken up to permit drainage. Sidewalks, curbs, gutters and street light bases shall be removed as indicated.

3.1.2 Utilities and Related Equipment

Remove existing utilities, as indicated or uncovered by work and terminate in a manner conforming to the nationally recognized code covering the specific utility and approved by the Contracting Officer. When utility lines are encountered that are not indicated on the drawings, the Contracting Officer shall be notified prior to further work in that area. Remove meters and related equipment and deliver to a location on the station in accordance with instructions of the Contracting Officer. If utility lines are encountered that are not shown on drawings, contact the Contracting Officer for further instructions.

3.1.3 Paving and Slabs

Remove concrete and asphaltic concrete paving and slabs including aggregate base to a depth of 12 inches below new finish grade. Provide neat sawcuts at limits of pavement removal as indicated.

3.1.4 Omitted
3.1.5 Omitted
3.1.6 Omitted
3.1.7 Omitted

3.1.8 Patching

Where removals leave holes and damaged surfaces exposed in the finished work, patch and repair these holes and damaged surfaces to match adjacent finished surfaces. Where new work is to be applied to existing surfaces, perform removals and patching in a manner to produce surfaces suitable for receiving new work. Finished surfaces of patched area shall be flush with the adjacent existing surface and shall match the existing adjacent surface as closely as possible as to texture and finish. Patching shall be as specified and indicated, and shall include:

a. Holes and depressions left as a result of removals in existing masonry walls to remain shall be completely filled with an approved masonry patching material, applied in accordance with the manufacturer's printed instructions.

b. Where existing partitions have been removed leaving damaged or missing resilient tile flooring, patch to match the existing floor tile.

c. Patch acoustic lay-in ceiling where partitions have been removed. The transition between the different ceiling heights shall be effected by continuing the higher ceiling level over to the first runner on the lower ceiling and closing the vertical opening with a painted sheet metal strip.

3.1.9 Omitted

3.1.10 Cylinders and Canisters

Remove all fire suppression system cylinders and canisters and dispose of in accordance with the paragraph entitled "Disposal of Ozone Depleting Substance (ODS)."

3.2 FILLING

Holes, open basements and other hazardous openings shall be filled in accordance with Section 02300A, EARTHWORK.

3.3 DISPOSITION OF MATERIAL

3.3.1 Title to Materials

Except where specified in other sections, all materials and equipment removed, and not reused, shall become the property of the Contractor and shall be removed from Government property. Title to materials resulting from demolition, and materials and equipment to be removed, is vested in the Contractor upon approval by the Contracting Officer of the Contractor's demolition and removal procedures, and authorization by the Contracting Officer to begin demolition. The Government will not be responsible for the condition or loss of, or damage to, such property after contract award. Materials and equipment shall not be viewed by prospective purchasers or sold on the site.

3.3.2 Reuse of Materials and Equipment

Remove and store materials and equipment indicated to be reused or relocated to prevent damage, and reinstall as the work progresses.

3.3.3 Omitted
3.3.4 Omitted
3.3.5 Omitted

3.3.6 Unsalvageable Material

Concrete, masonry, and other noncombustible material, except concrete permitted to remain in place, shall be disposed of off Government property. Combustible material shall be disposed of off the site.

3.4 CLEANUP

Debris and rubbish shall be removed from basement and similar excavations. Debris shall be removed and transported in a manner that prevents spillage on streets or adjacent areas. Local regulations regarding hauling and disposal shall apply.

3.4.1 Debris and Rubbish

Debris and rubbish shall be removed from basement and similar excavations. Debris shall be removed and transported in a manner that prevents spillage on streets or adjacent areas. Local regulations regarding hauling and disposal shall apply.

-- End of Section --

SECTION TABLE OF CONTENTS

DIVISION 02 - SITE CONSTRUCTION

SECTION 02231

CLEARING AND GRUBBING

07/02

PART 1 GENERAL

1.1 OMITTED
1.2 DELIVERY, STORAGE, AND HANDLING

PART 2 PRODUCTS

2.1 TREE WOUND PAINT
2.2 HERBICIDE

PART 3 EXECUTION

3.1 PROTECTION
3.1.1 Roads and Walks
3.1.2 Trees, Shrubs, and Existing Facilities
3.1.3 Utility Lines
3.2 CLEARING
3.3 TREE REMOVAL
3.4 PRUNING
3.5 GRUBBING
3.6 DISPOSAL OF MATERIALS
3.6.1 Omitted
3.6.2 Nonsaleable Materials

-- End of Section Table of Contents --

UFGS-02231 (July 2002)

SECTION 02231

CLEARING AND GRUBBING
07/02

PART 1 GENERAL

1.1 OMITTED

1.2 DELIVERY, STORAGE, AND HANDLING

Deliver materials to, store at the site, and handle in a manner which will maintain the materials in their original manufactured or fabricated condition until ready for use.

PART 2 PRODUCTS

2.1 TREE WOUND PAINT

Bituminous based paint of standard manufacture specially formulated for tree wounds.

2.2 HERBICIDE

Comply with Federal Insecticide, Fungicide, and Rodenticide Act (Title 7 U.S.C. Section 136) for requirements on contractor's licensing, certification and record keeping. Contact the command Pest Control Coordinator prior to starting work.

PART 3 EXECUTION

3.1 PROTECTION

3.1.1 Roads and Walks

Keep roads and walks free of dirt and debris at all times.

3.1.2 Trees, Shrubs, and Existing Facilities

Protection shall be in accordance with Section 01355A ENVIRONMENTAL PROTECRION. Trees and vegetation to be left standing shall be protected from damage incident to clearing, grubbing, and construction operations by the erection of barriers or by such other means as the circumstances require.

3.1.3 Utility Lines

Protect existing utility lines that are indicated to remain from damage. Notify the Contracting Officer immediately of damage to or an encounter with an unknown existing utility line. The Contractor shall be responsible for the repairs of damage to existing utility lines that are indicated or made known to the Contractor prior to start of clearing and grubbing operations. When utility lines which are to be removed are encountered within the area of operations, the Contractor shall notify the Contracting Officer in ample time to minimize interruption of the service.

3.2 CLEARING

Clearing shall consist of the felling, trimming, and cutting of trees into sections and the satisfactory disposal of the trees and other vegetation designated for removal, including downed timber, snags, brush, and rubbish occurring within the areas to be cleared. Trees, stumps, roots, brush, and other vegetation in areas to be cleared shall be cut off flush with or below the original ground surface, except such trees and vegetation as may be indicated or directed to be left standing. Trees designated to be left standing within the cleared areas shall be trimmed of dead branches 1-1/2 inches or more in diameter and shall be trimmed of all branches the heights indicated or directed. Limbs and branches to be trimmed shall be neatly cut close to the bole of the tree or main branches. Cuts more than 1-1/2 inches in diameter shall be painted with an approved tree-wound paint.

3.3 TREE REMOVAL

Where indicated or directed, trees and stumps that are designated as trees shall be removed from areas outside those areas designated for clearing and grubbing. This work shall include the felling of such trees and the removal of their stumps and roots as specified in paragraph GRUBBING. Trees shall be disposed of as specified in paragraph DISPOSAL OF MATERIALS.

3.4 PRUNING

Prune trees designated to be left standing within the cleared areas of dead branches 1 1/2 inches or more in diameter; and trim branches to heights and in a manner as indicated. Neatly cut limbs and branches to be trimmed close to the bole of the tree or main branches. Paint cuts more than 1 1/4 inches in diameter with an approved tree wound paint.

3.5 GRUBBING

Grubbing shall consist of the removal and disposal of stumps, roots larger than 3 inches in diameter, and matted roots from the designated grubbing areas.
Material to be grubbed, together with logs and other organic or metallic debris not suitable for foundation purposes, shall be removed to a depth of not less than 18 inches below the original surface level of the ground in areas indicated to be grubbed and in areas indicated as construction areas under this contract, such as areas for buildings, and areas to be paved. Depressions made by grubbing shall be filled with suitable material and compacted to make the surface conform with the original adjacent surface of the ground.

3.6 DISPOSAL OF MATERIALS

3.6.1 Omitted

3.6.2 Nonsaleable Materials

Logs, stumps, roots, brush, rotten wood, and other refuse from the clearing and grubbing operations, except for salable timber, shall be disposed of outside the limits of Government-controlled land at the Contractor's responsibility, except when otherwise directed in writing. Such directive will state the conditions covering the disposal of such products and will also state the areas in which they may be placed.

-- End of Section --

SECTION TABLE OF CONTENTS

DIVISION 02 - SITE CONSTRUCTION

SECTION 02300A

EARTHWORK

12/97

PART 1 GENERAL

1.1 REFERENCES
1.2 OMITTED
1.3 OMITTED
1.4 DEFINITIONS
1.4.1 Satisfactory Materials
1.4.2 Unsatisfactory Materials
1.4.3 Cohesionless and Cohesive Materials
1.4.4 Degree of Compaction
1.4.5 Omitted
1.4.6 Topsoil
1.5 SUBMITTALS
1.6 SUBSURFACE DATA
1.7 CLASSIFICATION OF EXCAVATION
1.8 OMITTED
1.9 UTILIZATION OF EXCAVATED MATERIALS

PART 2 PRODUCTS (Not Applicable)

PART 3 EXECUTION

3.1 STRIPPING OF TOPSOIL
3.2 GENERAL EXCAVATION
3.2.1 Ditches, Gutters, and Channel Changes
3.2.2 Drainage Structures
3.3 SELECTION OF BORROW MATERIAL
3.4 OPENING AND DRAINAGE OF EXCAVATION AND BORROW PITS
3.5 GRADING AREAS
3.6 BACKFILL
3.7 OMITTED
3.8 OMITTED
3.9 SUBGRADE PREPARATION
3.9.1 Construction
3.9.2 Compaction
3.9.2.1 Omitted
3.9.2.2 Subgrade for Pavements
3.10 OMITTED
3.11 FINISHING
3.12 PLACING TOPSOIL
3.13 TESTING
3.13.1 Fill and Backfill Material Gradation
3.13.2 In-Place Densities
3.13.3 Omitted
3.13.4 Moisture Contents
3.13.5 Optimum Moisture and Laboratory Maximum Density
3.13.6 Tolerance Tests for Subgrades

3.14 SUBGRADE AND EMBANKMENT PROTECTION

-- End of Section Table of Contents --

UFGS-02300A (December 1997)

SECTION 02300A

EARTHWORK
12/97

PART 1 GENERAL

1.1 REFERENCES

The publications listed below form a part of this specification to the extent referenced. The publications are referred to in the text by basic designation only.

AMERICAN ASSOCIATION OF STATE HIGHWAY AND TRANSPORTATION OFFICIALS (AASHTO)

AASHTO T 180	(1997) Moisture-Density Relations of Soils Using a 4.54-kg (10-lb) Rammer and an 457 mm (18-in) Drop
AASHTO T 224	(1996) Correction for Coarse Particles in the Soil Compaction Test

AMERICAN SOCIETY FOR TESTING AND MATERIALS (ASTM)

ASTM C 136	(1996a) Sieve Analysis of Fine and Coarse Aggregates
ASTM D 422	(1963; R 1998) Particle-Size Analysis of Soils
ASTM D 1140	(1997) Amount of Material in Soils Finer than the No. 200 (75-micrometer) Sieve
ASTM D 1556	(1990; R 1996el) Density and Unit Weight of Soil in Place by the Sand-Cone Method
ASTM D 1557	(1991; R 1998) Laboratory Compaction Characteristics of Soil Using Modified Effort (56,000 ft-lbf/cu. ft. (2,700 kN-m/cu. m.))
ASTM D 2167	(1994) Density and Unit Weight of Soil in Place by the Rubber Balloon Method
ASTM D 2487	(1998) Classification of Soils for Engineering Purposes (Unified Soil Classification System)
ASTM D 2922	(1996el) Density of Soil and Soil-Aggregate in Place by Nuclear Methods (Shallow Depth)
ASTM D 2937	(1994) Density of Soil in Place by the

	Drive-Cylinder Method
ASTM D 3017	(1988; R 1996el) Water Content of Soil and Rock in Place by Nuclear Methods (Shallow Depth)
ASTM D 4318	(1998) Liquid Limit, Plastic Limit, and Plasticity Index of Soils

1.2 OMITTED

1.3 OMITTED

1.4 DEFINITIONS

1.4.1 Satisfactory Materials

Satisfactory materials shall comprise any materials classified by ASTM D 2487 as GW, GP, GM, GP-GM, GW-GM, GC, GP-GC, GM-GC, SW, SP, . Satisfactory materials for grading shall be comprised of stones less than 8 inches, except for fill material for pavements and railroads which shall be comprised of stones less than 3 inches in any dimension.

1.4.2 Unsatisfactory Materials

Materials which do not comply with the requirements for satisfactory materials are unsatisfactory. Unsatisfactory materials also include man-made fills; trash; refuse; backfills from previous construction; and material classified as satisfactory which contains root and other organic matter or frozen material. The Contracting Officer shall be notified of any contaminated materials.

1.4.3 Cohesionless and Cohesive Materials

Cohesionless materials include materials classified in ASTM D 2487 as GW, GP, SW, and SP. Cohesive materials include materials classified as GC, SC, ML, CL, MH, and CH. Materials classified as GM and SM will be identified as cohesionless only when the fines are nonplastic. Testing required for classifying materials shall be in accordance with ASTM D 4318, ASTM C 136, ASTM D 422, and ASTM D 1140.

1.4.4 Degree of Compaction

Degree of compaction required, except as noted in the second sentence, is expressed as a percentage of the maximum density obtained by the test procedure presented in ASTM D 1557abbreviated as a percent of laboratory maximum density. Since ASTM D 1557 applies only to soils that have 30 percent or less by weight of their particles retained on the 3/4 inch sieve, the degree of compaction for material having more than 30 percent by weight of their particles retained on the 3/4 inch sieve shall be expressed as a percentage of the maximum density in accordance with AASHTO T 180 Method D and corrected with AASHTO T 224. To maintain the same percentage of coarse material, the "remove and replace" procedure as described in the NOTE 8 in Paragraph 7.2 of AASHTO T 180 shall be used.

1.4.5 Omitted

1.4.6 Topsoil

Material suitable for topsoils obtained from stockpiles and/or offsite areas.

1.5 SUBMITTALS

Government approval is required for submittals with a "G" designation; submittals not having a "G" designation are for information only. When used, a designation following the "G" designation identifies the office that will review the submittal for the Government. The following shall be submitted in accordance with Section 01330 SUBMITTAL PROCEDURES:

SD-03 Product Data

Earthwork

Procedure and location for disposal of unused satisfactory material. Proposed source of borrow material.

SD-06 Test Reports

Testing; G.

Within 24 hours of conclusion of physical tests, two copies of test results, including calibration curves and results of calibration tests.

1.6 SUBSURFACE DATA

Subsurface soil boring logs are shown on the drawings. The subsoil investigation report and samples of materials taken from subsurface investigations may be examined at the station. These data represent the best subsurface information available; however, variations may exist in the subsurface between boring locations.

1.7 CLASSIFICATION OF EXCAVATION

No consideration will be given to the nature of the materials, and all excavation will be designated as unclassified excavation.

1.8 OMITTED

1.9 UTILIZATION OF EXCAVATED MATERIALS

Unsatisfactory materials removed from excavations shall be disposed of in designated waste disposal or spoil areas. Satisfactory material removed from excavations shall be used, insofar as practicable, in the construction of fills, embankments, subgrades, shoulders, bedding (as backfill), and for similar purposes. No satisfactory excavated material shall be wasted without specific written authorization. Satisfactory material authorized to be wasted shall be disposed of in designated areas approved for surplus material storage or designated waste areas as directed. Newly designated waste areas on Government-controlled land shall be cleared and grubbed before disposal of waste material thereon. Coarse rock from excavations shall be stockpiled and used for constructing slopes or embankments adjacent to streams, or sides and bottoms of channels and for protecting against erosion. No excavated material shall be disposed of to obstruct

the flow of any stream, endanger a partly finished structure, impair the efficiency or appearance of any structure, or be detrimental to the completed work in any way.

PART 2 PRODUCTS (Not Applicable)

PART 3 EXECUTION

3.1 STRIPPING OF TOPSOIL

Topsoil may be stripped to a depth of 4 inches. Topsoil shall be spread on areas already graded and prepared for topsoil, or transported and deposited in stockpiles convenient to areas that are to receive application of the topsoil later, or at locations indicated or specified. Topsoil shall be kept separate from other excavated materials, brush, litter, objectionable weeds, roots, stones larger than 2 inches in diameter, and other materials that would interfere with planting and maintenance operations. Any surplus of topsoil from excavations and grading shall be removed from the site.

3.2 GENERAL EXCAVATION

The Contractor shall perform excavation of every type of material encountered within the limits of the project to the lines, grades, and elevations indicated and as specified. Grading shall be in conformity with the typical sections shown and the tolerances specified in paragraph FINISHING. Satisfactory excavated materials shall be transported to and placed in fill or embankment within the limits of the work. Unsatisfactory materials encountered within the limits of the work shall be excavated below grade and replaced with satisfactory materials as directed. Such excavated material and the satisfactory material ordered as replacement shall be included in excavation. Surplus satisfactory excavated material not required for fill or embankment shall be disposed of in areas approved for surplus material storage or designated waste areas. Unsatisfactory excavated material shall be disposed of in designated waste or spoil areas. During construction, excavation and fill shall be performed in a manner and sequence that will provide proper drainage at all times. Material required for fill or embankment in excess of that produced by excavation within the grading limits shall be excavated from the borrow areas indicated or from other approved areas selected by the Contractor as specified.

3.2.1 Ditches, Gutters, and Channel Changes

Excavation of ditches, gutters, and channel changes shall be accomplished by cutting accurately to the cross sections, grades, and elevations shown. Ditches and gutters shall not be excavated below grades shown. Excessive open ditch or gutter excavation shall be backfilled with satisfactory, thoroughly compacted, material or with suitable stone or cobble to grades shown. Material excavated shall be disposed of as shown or as directed, except that in no case shall material be deposited less than 4 feet from the edge of a ditch. The Contractor shall maintain excavations free from detrimental quantities of leaves, brush, sticks, trash, and other debris until final acceptance of the work.

3.2.2 Drainage Structures

Excavations shall be made to the lines, grades, and elevations shown, or as directed. Trenches and foundation pits shall be of sufficient size to

permit the placement and removal of forms for the full length and width of structure footings and foundations as shown. Rock or other hard foundation material shall be cleaned of loose debris and cut to a firm, level, stepped, or serrated surface. Loose disintegrated rock and thin strata shall be removed. When concrete or masonry is to be placed in an excavated area, the bottom of the excavation shall not be disturbed. Excavation to the final grade level shall not be made until just before the concrete or masonry is to be placed. Where pile foundations are to be used, the excavation of each pit shall be stopped at an elevation 1 foot above the base of the footing, as specified, before piles are driven. After the pile driving has been completed, loose and displaced material shall be removed and excavation completed, leaving a smooth, solid, undisturbed surface to receive the concrete or masonry.

3.3 SELECTION OF BORROW MATERIAL

Borrow material shall be selected to meet the requirements and conditions of the particular fill or embankment for which it is to be used. Borrow material shall be obtained from the borrow areas from approved private sources. Unless otherwise provided in the contract, the Contractor shall obtain from the owners the right to procure material, pay royalties and other charges involved, and bear the expense of developing the sources, including rights-of-way for hauling. Borrow material from approved sources on Government-controlled land may be obtained without payment of royalties. Unless specifically provided, no borrow shall be obtained within the limits of the project site without prior written approval. Necessary clearing, grubbing, and satisfactory drainage of borrow pits and the disposal of debris thereon shall be considered related operations to the borrow excavation.

3.4 OPENING AND DRAINAGE OF EXCAVATION AND BORROW PITS

Except as otherwise permitted, borrow pits and other excavation areas shall be excavated providing adequate drainage. Overburden and other spoil material shall be transported to designated spoil areas or otherwise disposed of as directed. Borrow pits shall be neatly trimmed and drained after the excavation is completed. The Contractor shall ensure that excavation of any area, operation of borrow pits, or dumping of spoil material results in minimum detrimental effects on natural environmental conditions.

3.5 GRADING AREAS

Where indicated, work will be divided into grading areas within which satisfactory excavated material shall be placed in embankments, fills, and required backfills. The Contractor shall not haul satisfactory material excavated in one grading area to another grading area except when so directed in writing.

3.6 BACKFILL

Backfill adjacent to any and all types of structures shall be placed and compacted to at least 90 percent laboratory maximum density for cohesive materials or 95 percent laboratory maximum density for cohesionless materials to prevent wedging action or eccentric loading upon or against the structure. Ground surface on which backfill is to be placed shall be prepared as specified in paragraph PREPARATION OF GROUND SURFACE FOR EMBANKMENTS. Compaction requirements for backfill materials shall also conform to the applicable portions of paragraphs PREPARATION OF GROUND

SURFACE FOR EMBANKMENTS, EMBANKMENTS, and SUBGRADE PREPARATION, and Section 02630A STORM-DRAINAGE SYSTEM; and Section 02316A EXCAVATION, TRENCHING, AND BACKFILLING FOR UTILITIES SYSTEMS. Compaction shall be accomplished by sheepsfoot rollers, pneumatic-tired rollers, steel-wheeled rollers, vibratory compactors, or other approved equipment.

3.7 OMITTED
3.8 OMITTED

3.9 SUBGRADE PREPARATION

3.9.1 Construction

Subgrade shall be shaped to line, grade, and cross section, and compacted as specified. This operation shall include plowing, disking, and any moistening or aerating required to obtain specified compaction. Soft or otherwise unsatisfactory material shall be removed and replaced with satisfactory excavated material or other approved material as directed. Rock encountered in the cut section shall be excavated to a depth of 6 inches below finished grade for the subgrade. Low areas resulting from removal of unsatisfactory material or excavation of rock shall be brought up to required grade with satisfactory materials, and the entire subgrade shall be shaped to line, grade, and cross section and compacted as specified. The elevation of the finish subgrade shall not vary more than 0.05 foot from the established grade and cross section.

3.9.2 Compaction

Compaction shall be accomplished by sheepsfoot rollers, pneumatic-tired rollers, steel-wheeled rollers, vibratory compactors, or other approved equipment.

3.9.2.1 Omitted

3.9.2.2 Subgrade for Pavements

Subgrade for pavements shall be compacted to at least 98 percentage laboratory maximum density for the depth below the surface of the pavement shown. When more than one soil classification is present in the subgrade, the top 8 inches of subgrade shall be scarified, windrowed, thoroughly blended, reshaped, and compacted.

3.10 OMITTED

3.11 FINISHING

The surface of excavations, embankments, and subgrades shall be finished to a smooth and compact surface in accordance with the lines, grades, and cross sections or elevations shown. The degree of finish for graded areas shall be within 0.1 foot of the grades and elevations indicated except that the degree of finish for subgrades shall be specified in paragraph SUBGRADE PREPARATION. Gutters and ditches shall be finished in a manner that will result in effective drainage. The surface of areas to be turfed shall be finished to a smoothness suitable for the application of turfing materials.

3.12 PLACING TOPSOIL

On areas to receive topsoil, the compacted subgrade soil shall be scarified

to a 2 inch depth for bonding of topsoil with subsoil. Topsoil then shall be spread evenly to a thickness of 4 inches and graded to the elevations and slopes shown. Topsoil shall not be spread when frozen or excessively wet or dry. Material required for topsoil in excess of that produced by excavation within the grading limits shall be obtained from offsite areas.

3.13 TESTING

Testing shall be performed by an approved commercial testing laboratory or by the Contractor subject to approval. If the Contractor elects to establish testing facilities, no work requiring testing will be permitted until the Contractor's facilities have been inspected and approved by the Contracting Officer. Field in-place density shall be determined in accordance with ASTM D 1556. When test results indicate, as determined by the Contracting Officer, that compaction is not as specified, the material shall be removed, replaced and recompacted to meet specification requirements. Tests on recompacted areas shall be performed to determine conformance with specification requirements. Inspections and test results shall be certified by a registered professional civil engineer. These certifications shall state that the tests and observations were performed by or under the direct supervision of the engineer and that the results are representative of the materials or conditions being certified by the tests. The following number of tests, if performed at the appropriate time, will be the minimum acceptable for each type operation.

3.13.1 Fill and Backfill Material Gradation

One test per 30 cubic yards stockpiled or in-place source material. Gradation of fill and backfill material shall be determined in accordance with ASTM C 136.

3.13.2 In-Place Densities

a. One test per 3000 square feet, or fraction thereof, of each lift of fill or backfill areas compacted by other than hand-operated machines.

b. One test per 1000 square feet, or fraction thereof, of each lift of fill or backfill areas compacted by hand-operated machines.

3.13.3 Omitted

3.13.4 Moisture Contents

In the stockpile, excavation, or borrow areas, a minimum of two tests per day per type of material or source of material being placed during stable weather conditions shall be performed. During unstable weather, tests shall be made as dictated by local conditions and approved by the Contracting Officer.

3.13.5 Optimum Moisture and Laboratory Maximum Density

Tests shall be made for each type material or source of material including borrow material to determine the optimum moisture and laboratory maximum density values. One representative test per 60 cubic yards of fill and backfill, or when any change in material occurs which may affect the optimum moisture content or laboratory maximum density.

3.13.6 Tolerance Tests for Subgrades

Continuous checks on the degree of finish specified in paragraph SUBGRADE PREPARATION shall be made during construction of the subgrades.

3.14 SUBGRADE AND EMBANKMENT PROTECTION

During construction, embankments and excavations shall be kept shaped and drained. Ditches and drains along subgrade shall be maintained to drain effectively at all times. The finished subgrade shall not be disturbed by traffic or other operation and shall be protected and maintained by the Contractor in a satisfactory condition until ballast, subbase, base, or pavement is placed. The storage or stockpiling of materials on the finished subgrade will not be permitted. No subbase, base course, ballast, or pavement shall be laid until the subgrade has been checked and approved, and in no case shall subbase, base, surfacing, pavement, or ballast be placed on a muddy, spongy, or frozen subgrade.

-- End of Section --

SECTION TABLE OF CONTENTS

DIVISION 02 - SITE CONSTRUCTION

SECTION 02315A

EXCAVATION, FILLING AND BACKFILLING FOR BUILDINGS

08/98

PART 1 GENERAL

1.1 REFERENCES
1.2 DEGREE OF COMPACTION
1.3 SUBMITTALS

PART 2 PRODUCTS

2.1 MATERIALS
2.1.1 Satisfactory Materials
2.1.2 Unsatisfactory Materials
2.1.3 Cohesionless and Cohesive Materials
2.1.4 Expansive Soils
2.1.5 Nonfrost Susceptible (NFS) Material
2.2 CAPILLARY WATER BARRIER

PART 3 EXECUTION

3.1 CLEARING AND GRUBBING
3.2 TOPSOIL
3.3 EXCAVATION
3.4 DRAINAGE AND DEWATERING
3.4.1 Drainage
3.4.2 Dewatering
3.5 SHORING
3.6 CLASSIFICATION OF EXCAVATION
3.7 BLASTING
3.8 UTILITY AND DRAIN TRENCHES
3.9 BORROW
3.10 EXCAVATED MATERIALS
3.11 FINAL GRADE OF SURFACES TO SUPPORT CONCRETE
3.12 SUBGRADE PREPARATION
3.13 FILLING AND BACKFILLING
3.14 TESTING
3.14.1 In-Place Densities
3.14.1.1 In-Place Density of Subgrades
3.14.1.2 In-Place Density of Fills and Backfills
3.14.2 Moisture Content
3.14.3 Optimum Moisture and Laboratory Maximum Density
3.15 CAPILLARY WATER BARRIER
3.16 GRADING
3.17 SPREADING TOPSOIL
3.18 PROTECTION

-- End of Section Table of Contents --

UFGS-02315A (August 1998)

SECTION 02315A

EXCAVATION, FILLING AND BACKFILLING FOR BUILDINGS
08/98

PART 1 GENERAL

1.1 REFERENCES

The publications listed below form a part of this specification to the extent referenced. The publications are referred to in the text by basic designation only.

AMERICAN SOCIETY FOR TESTING AND MATERIALS (ASTM)

ASTM D 1556	(1990; R 1996el) Density and Unit Weight of Soil in Place by the Sand-Cone Method
ASTM D 1557	(1991; R 1998) Laboratory Compaction Characteristics of Soil Using Modified Effort (56,000 ft-lbf/cu. ft. (2,700 kN-m/cu.m.))
ASTM D 2167	(1994) Density and Unit Weight of Soil in Place by the Rubber Balloon Method
ASTM D 2216	(1998) Laboratory Determination of Water (Moisture) Content of Soil and Rock
ASTM D 2487	(1998) Classification of Soils for Engineering Purposes (Unified Soil Classification System)
ASTM D 2922	(1996el) Density of Soil and Soil-Aggregate in Place by Nuclear Methods (Shallow Depth)
ASTM D 2937	(1994) Density of Soil in Place by the Drive-Cylinder Method
ASTM D 3017	(1988; R 1996el) Water Content of Soil and Rock in Place by Nuclear Methods (Shallow Depth)
ASTM D 4318	(1998) Liquid Limit, Plastic Limit, and Plasticity Index of Soils

1.2 DEGREE OF COMPACTION

Degree of compaction is expressed as a percentage of the maximum density obtained by the test procedure presented in ASTM D 1557, abbreviated as percent laboratory maximum density.

1.3 SUBMITTALS

Government approval is required for submittals with a "G" designation; submittals not having a "G" designation are for information only. When used, a designation following the "G" designation identifies the office that will review the submittal for the Government. The following shall be submitted in accordance with Section 01330 SUBMITTAL PROCEDURES:

SD-06 Test Reports

Testing; G

Copies of all laboratory and field test reports within 24 hours of the completion of the test.

PART 2 PRODUCTS

2.1 MATERIALS

2.1.1 Satisfactory Materials

Satisfactory materials shall comprise any materials classified by ASTM D 2487 as GW, GP, GM, GP-GM, GW-GM, GC, GP-GC, GM-GC, SW, SP,.

2.1.2 Unsatisfactory Materials

Materials which do not comply with the requirements for satisfactory materials are unsatisfactory. Unsatisfactory materials also include man-made fills, trash, refuse, or backfills from previous construction. Unsatisfactory material also includes material classified as satisfactory which contains root and other organic matter, frozen material, and stones larger than 3/4 inches. The Contracting Officer shall be notified of any contaminated materials.

2.1.3 Cohesionless and Cohesive Materials

Cohesionless materials include materials classified in ASTM D 2487 as GW, GP, SW, and SP. Cohesive materials include materials classified as GC, SC, ML, CL, MH, and CH. Materials classified as GM, GP-GM, GW-GM, SW-SM, SP-SM, and SM shall be identified as cohesionless only when the fines are nonplastic.

2.1.4 Expansive Soils

Expansive soils are defined as soils that have a plasticity index equal to or greater than 20 when tested in accordance with ASTM D 4318.

2.1.5 Nonfrost Susceptible (NFS) Material

Nonfrost susceptible material shall be a uniformly graded washed sand with a maximum particle size of 1/4 inch and less than 5 percent passing the No. 200 size sieve, and with not more than 3 percent by weight finer than 0.02 mm grain size.

2.2 CAPILLARY WATER BARRIER

Capillary Water Barrier shall consist of clean, crushed, nonporous rock, crushed gravel, or uncrushed gravel. The maximum particle size shall be 1-1/2 inches and no more than 2 percent by weight shall pass the No. 4

size sieve.

PART 3 EXECUTION

3.1 CLEARING AND GRUBBING

Clearing and grubbing is specified in Section 02231 CLEARING AND GRUBBING.

3.2 TOPSOIL

Topsoil shall be stripped to a depth of 4 inches below existing grade within the designated excavations and grading lines and deposited in storage piles for later use. Excess topsoil shall be disposed as specified for excess excavated material.

3.3 EXCAVATION

Excavation shall conform to the dimensions and elevations indicated for each building, structure, and footing except as specified, and shall include trenching for utility and foundation drainage systems to a point 5 feet beyond the building line of each building and structure, excavation for all work incidental thereof. Excavation shall extend a sufficient distance from walls and footings to allow for placing and removal of forms. Excavations below indicated depths will not be permitted except to remove unsatisfactory material. Unsatisfactory material encountered below the grades shown shall be removed as directed and replaced with satisfactory material; and payment will be made in conformance with the CHANGES clause of the CONTRACT CLAUSES. Satisfactory material removed below the depths indicated, without specific direction of the Contracting Officer, shall be replaced, at no additional cost to the Government, with satisfactory materials to the indicated excavation grade; except that concrete footings shall be increased in thickness to the bottom of the overdepth excavations and over-break in rock excavation. Satisfactory material shall be placed and compacted as specified in paragraph FILLING AND BACKFILLING. Determination of elevations and measurements of approved overdepth excavation of unsatisfactory material below grades indicated shall be done under the direction of the Contracting Officer.

3.4 DRAINAGE AND DEWATERING

3.4.1 Drainage

Surface water shall be directed away from excavation and construction sites to prevent erosion and undermining of foundations. Diversion ditches, dikes and grading shall be provided and maintained as necessary during construction. Excavated slopes and backfill surfaces shall be protected to prevent erosion and sloughing. Excavation shall be performed so that the site, the area immediately surrounding the site, and the area affecting operations at the site shall be continually and effectively drained.

3.4.2 Dewatering

Groundwater flowing toward or into excavations shall be controlled to prevent sloughing of excavation slopes and walls, boils, uplift and heave in the excavation and to eliminate interference with orderly progress of construction. French drains, sumps, ditches or trenches will not be permitted within 3 feet of the foundation of any structure, except with specific written approval, and after specific contractual provisions for restoration of the foundation area have been made. Control measures shall

be taken by the time the excavation reaches the water level in order to maintain the integrity of the in situ material. While the excavation is open, the water level shall be maintained continuously, at least 2 feet below the working level.

3.5 SHORING

Shoring, including sheet piling, shall be furnished and installed as necessary to protect workmen, banks, adjacent paving, structures, and utilities. Shoring, bracing, and sheeting shall be removed as excavations are backfilled, in a manner to prevent caving.

3.6 CLASSIFICATION OF EXCAVATION

Excavation will be unclassified regardless of the nature of material encountered.

3.7 BLASTING

Blasting will not be permitted.

3.8 UTILITY AND DRAIN TRENCHES

Trenches for underground utilities systems and drain lines shall be excavated to the required alignments and depths. The bottoms of trenches shall be graded to secure the required slope and shall be tamped if necessary to provide a firm pipe bed. Recesses shall be excavated to accommodate bells and joints so that pipe will be uniformly supported for the entire length. Rock, where encountered, shall be excavated to a depth of at least 6 inches below the bottom of the pipe, and the overdepth shall be backfilled with satisfactory material placed and compacted in conformance with paragraph FILLING AND BACKFILLING.

3.9 BORROW

Where satisfactory materials are not available in sufficient quantity from required excavations, approved materials shall be obtained as specified in Section 02300A EARTHWORK.

3.10 EXCAVATED MATERIALS

Satisfactory excavated material required for fill or backfill shall be placed in the proper section of the permanent work required under this section or shall be separately stockpiled if it cannot be readily placed. Satisfactory material in excess of that required for the permanent work and all unsatisfactory material shall be disposed of as specified in Section 02300A EARTHWORK.

3.11 FINAL GRADE OF SURFACES TO SUPPORT CONCRETE

Excavation to final grade shall not be made until just before concrete is to be placed. Only excavation methods that will leave the foundation rock in a solid and unshattered condition shall be used. Approximately level surfaces shall be roughened, and sloped surfaces shall be cut as indicated into rough steps or benches to provide a satisfactory bond. Shales shall be protected from slaking and all surfaces shall be protected from erosion resulting from ponding or flow of water.

3.12 SUBGRADE PREPARATION

Unsatisfactory material in surfaces to receive fill or in excavated areas shall be removed and replaced with satisfactory materials as directed by the Contracting Officer. The surface shall be scarified to a depth of 6 inches before the fill is started. Sloped surfaces steeper than 1 vertical to 4 horizontal shall be plowed, stepped, benched, or broken up so that the fill material will bond with the existing material. When subgrades are less than the specified density, the ground surface shall be broken up to a minimum depth of 6 inches, pulverized, and compacted to the specified density. When the subgrade is part fill and part excavation or natural ground, the excavated or natural ground portion shall be scarified to a depth of 12 inches and compacted as specified for the adjacent fill. Material shall not be placed on surfaces that are muddy, frozen, or contain frost. Compaction shall be accomplished by sheepsfoot rollers, pneumatic-tired rollers, steel-wheeled rollers, or other approved equipment well suited to the soil being compacted. Material shall be moistened or aerated as necessary to provide the moisture content that will readily facilitate obtaining the specified compaction with the equipment used. Minimum subgrade density shall be as specified in paragraph FILLING AND BACKFILLING.

3.13 FILLING AND BACKFILLING

Satisfactory materials shall be used in bringing fills and backfills to the lines and grades indicated and for replacing unsatisfactory materials. Satisfactory materials shall be placed in horizontal layers not exceeding 8 inches in loose thickness, or 6 inches when hand-operated compactors are used. After placing, each layer shall be plowed, disked, or otherwise broken up, moistened or aerated as necessary, thoroughly mixed and compacted as specified. Backfilling shall not begin until construction below finish grade has been approved, underground utilities systems have been inspected, tested and approved, forms removed, and the excavation cleaned of trash and debris. Backfill shall be brought to indicated finish grade. Backfill shall not be placed in wet or frozen areas. Where pipe is coated or wrapped for protection against corrosion, the backfill material up to an elevation 2 feet above sewer lines and 1 foot above other utility lines shall be free from stones larger than 1 inch in any dimension. Heavy equipment for spreading and compacting backfill shall not be operated closer to foundation or retaining walls than a distance equal to the height of backfill above the top of footing; the area remaining shall be compacted in layers not more than 4 inches in compacted thickness with power-driven hand tampers suitable for the material being compacted. Backfill shall be placed carefully around pipes or tanks to avoid damage to coatings, wrappings, or tanks. Backfill shall not be placed against foundation walls prior to 7 days after completion of the walls. As far as practicable, backfill shall be brought up evenly on each side of the wall and sloped to drain away from the wall. Each layer of fill and backfill shall be compacted to not less than the percentage of maximum density specified below:

	Percent Laboratory maximum density	
	Cohesive material	Cohesionless material
Fill, embankment, and backfill		
Under structures, building slabs, steps, paved areas, around footings, and in trenches	90	95
Under sidewalks and grassed areas	85	90
Nonfrost susceptible materials		95
Subgrade		
Under building slabs, steps, and paved areas, top 12 inches	90	95
Under sidewalks, top 6 inches	85	90

Approved compacted subgrades that are disturbed by the Contractor's operations or adverse weather shall be scarified and compacted as specified herein before to the required density prior to further construction thereon. Recompaction over underground utilities and heating lines shall be by hand tamping.

3.14 TESTING

Testing shall be the responsibility of the Contractor and shall be performed at no additional cost to the Government. Testing shall be performed by an approved commercial testing laboratory. Field in-place density shall be determined in accordance with, or ASTM D 1556.

3.14.1 In-Place Densities

In-place density and moisture content test results shall be included with the Contractor's daily construction quality control reports.

3.14.1.1 In-Place Density of Subgrades

One test per 800 square foot or fraction thereof.

3.14.1.2 In-Place Density of Fills and Backfills

One test per 800 square foot or fraction thereof of each lift for fill or backfill areas compacted by other than hand or hand-operated machines. The density for each lift of fill or backfill materials for trenches, pits, building perimeters or other structures or areas less than 6 feet in width, which are compacted with hand or hand-operated machines shall be tested in accordance with Section 02316A, "EXCAVATION, TRENCHING, AND BACKFILLING FOR UTILITIES SYSTEMS."

3.14.2 Moisture Content

In the stockpile, excavation or borrow areas, a minimum of two tests per day per type of material or source of materials being placed is required during stable weather conditions. During unstable weather, tests shall be made as dictated by local conditions and approved moisture content shall be tested in accordance with ASTM D 2216.

3.14.3 Optimum Moisture and Laboratory Maximum Density

Tests shall be made for each type material or source of material, including borrow material to determine the optimum moisture and laboratory maximum density values. One representative test per 30 cubic yards of fill and backfill, or when any change in material occurs which may affect the optimum moisture content or laboratory maximum density will be made.

3.15 CAPILLARY WATER BARRIER

Capillary water barrier under concrete floor and area-way slabs on grade shall be placed directly on the subgrade and shall be compacted with a minimum of two passes of a hand-operated plate-type vibratory compactor.

3.16 GRADING

Areas within 5 feet outside of each building and structure line shall be constructed true-to-grade, shaped to drain, and shall be maintained free of trash and debris until final inspection has been completed and the work has been accepted.

3.17 SPREADING TOPSOIL

Areas outside the building lines from which topsoil has been removed shall be topsoiled. The surface shall be free of materials that would hinder planting or maintenance operations. The subgrade shall be pulverized to a depth of 2 inches by disking or plowing for the bonding of topsoil with the subsoil. Topsoil shall then be uniformly spread, graded, and compacted to the thickness, elevations, slopes shown, and left free of surface irregularities. Topsoil shall be compacted by one pass of a cultipacker, roller, or other approved equipment weighing 100 to 160 pounds per linear foot of roller. Topsoil shall not be placed when the subgrade is frozen, excessively wet, extremely dry, or in a condition otherwise detrimental to seeding, planting, or proper grading.

3.18 PROTECTION

Settlement or washing that occurs in graded, topsoiled, or backfilled areas prior to acceptance of the work, shall be repaired and grades reestablished to the required elevations and slopes.

-- End of Section --

SECTION TABLE OF CONTENTS

DIVISION 02 - SITE CONSTRUCTION

SECTION 02316A

EXCAVATION, TRENCHING, AND BACKFILLING FOR UTILITIES SYSTEMS

05/02

PART 1 GENERAL

1.1 REFERENCES
1.2 OMITTED
1.3 DEGREE OF COMPACTION
1.4 SUBMITTALS

PART 2 PRODUCTS

2.1 MATERIALS
2.1.1 Satisfactory Materials
2.1.2 Unsatisfactory Materials
2.1.3 Cohesionless and Cohesive Materials
2.1.4 Rock
2.1.5 Unyielding Material
2.1.6 Unstable Material
2.1.7 Select Granular Material
2.1.8 Initial Backfill Material
2.2 PLASTIC MARKING TAPE
2.3 Detection Wire For Non-Metalic Piping

PART 3 EXECUTION

3.1 EXCAVATION
3.1.1 Trench Excavation Requirements
3.1.1.1 Bottom Preparation
3.1.1.2 Removal of Unyielding Material
3.1.1.3 Removal of Unstable Material
3.1.1.4 Excavation for Appurtenances
3.1.2 Stockpiles
3.2 BACKFILLING AND COMPACTION
3.2.1 Trench Backfill
3.2.1.1 Replacement of Unyielding Material
3.2.1.2 Replacement of Unstable Material
3.2.1.3 Bedding and Initial Backfill
3.2.1.4 Final Backfill
3.2.2 Backfill for Appurtenances
3.3 SPECIAL REQUIREMENTS
3.3.1 Gas Distribution
3.3.2 Water Lines
3.3.3 Heat Distribution System
3.3.4 Electrical Distribution System
3.3.5 Plastic Marking Tape
3.4 TESTING
3.4.1 Testing Facilities
3.4.2 Testing of Backfill Materials
3.4.3 Field Density Tests
3.4.4 Displacement of Sewers

-- End of Section Table of Contents --

UFGS-02316A (May 2002)

SECTION 02316A

EXCAVATION, TRENCHING, AND BACKFILLING FOR UTILITIES SYSTEMS
05/02

PART 1 GENERAL

1.1 REFERENCES

The publications listed below form a part of this specification to the extent referenced. The publications are referred to in the text by basic designation only.

AMERICAN SOCIETY FOR TESTING AND MATERIALS (ASTM)

ASTM D 1556	(1990; R 1996) Density and Unit Weight of Soil in Place by the Sand-Cone Method
ASTM D 1557	(1998) Laboratory Compaction Characteristics of Soil Using Modified Effort (56,000 ft-lbf/cu. ft. (2,700 kN-m/cu. m.))
ASTM D 2167	(1994) Density and Unit Weight of Soil in Place by the Rubber Balloon Method
ASTM D 2487	(1998) Classification of Soils for Engineering Purposes (Unified Soil Classification System)
ASTM D 2922	(1996) Density of Soil and Soil-Aggregate in Place by Nuclear Methods (Shallow Depth)
ASTM D 3017	(1988; R1996el) Water Content of Soil and Rock in Place by Nuclear Methods (Shallow Depth)

1.2 OMITTED

1.3 DEGREE OF COMPACTION

Degree of compaction shall be expressed as a percentage of the maximum density obtained by the test procedure presented in ASTM D 1557.

1.4 SUBMITTALS

Government approval is required for submittals with a "G" designation; submittals not having a "G" designation are for information only. When used, a designation following the "G" designation identifies the office that will review the submittal for the Government. The following shall be submitted in accordance with Section 01330 SUBMITTAL PROCEDURES:

SD-06 Test Reports

Field Density Tests; G
Testing of Backfill Materials

Copies of all laboratory and field test reports within 24 hours of the completion of the test.

PART 2 PRODUCTS

2.1 MATERIALS

2.1.1 Satisfactory Materials

Satisfactory materials shall comprise any materials classified by ASTM D 2487 as GW, GP, GM, GP-GM, GW-GM, GC, GP-GC, GM-GC, SW, SP.

2.1.2 Unsatisfactory Materials

Materials which do not comply with the requirements for satisfactory materials are unsatisfactory. Unsatisfactory materials also include man-made fills, trash, refuse, or backfills from previous construction. Unsatisfactory material also includes material classified as satisfactory which contains root and other organic matter, frozen material, and stones larger than 1 inch. The Contracting Officer shall be notified of any contaminated materials.

2.1.3 Cohesionless and Cohesive Materials

Cohesionless materials shall include materials classified in ASTM D 2487 as GW, GP, SW, and SP. Cohesive materials shall include materials classified as GC, SC, ML, CL, MH, and CH. Materials classified as GM and SM shall be identified as cohesionless only when the fines are nonplastic.

2.1.4 Rock

Rock shall consist of boulders measuring 1/2 cubic yard or more and materials that cannot be removed without systematic drilling and blasting such as rock material in ledges, bedded deposits, unstratified masses and conglomerate deposits, and below ground concrete or masonry structures, exceeding 1/2 cubic yard in volume, except that pavements shall not be considered as rock.

2.1.5 Unyielding Material

Unyielding material shall consist of rock and gravelly soils with stones greater than 3 inches in any dimension or as defined by the pipe manufacturer, whichever is smaller.

2.1.6 Unstable Material

Unstable material shall consist of materials too wet to properly support the utility pipe, conduit, or appurtenant structure.

2.1.7 Select Granular Material

Select granular material shall consist of well-graded sand, gravel, crushed gravel, crushed stone or crushed slag composed of hard, tough and durable particles, and shall contain not more than 10 percent by weight of material passing a No. 200 mesh sieve and no less than 95 percent by weight passing the 1 inch sieve. The maximum allowable aggregate size shall be 1/2

inches, or the maximum size recommended by the pipe manufacturer, whichever is smaller.

2.1.8 Initial Backfill Material

Initial backfill shall consist of select granular material or satisfactory materials free from rocks 1/2 inch or larger in any dimension or free from rocks of such size as recommended by the pipe manufacturer, whichever is smaller. When the pipe is coated or wrapped for corrosion protection, the initial backfill material shall be free of stones larger than 1/2 inch in any dimension or as recommended by the pipe manufacturer, whichever is smaller.

2.2 PLASTIC MARKING TAPE

Plastic marking tape shall be acid and alkali-resistant polyethylene film, 6 inches wide with minimum thickness of 0.004 inch. Tape shall have a minimum strength of 1750 psi lengthwise and 1500 psi crosswise. The tape shall be manufactured with integral wires, foil backing or other means to enable detection by a metal detector when the tape is buried up to 3 feet deep. The tape shall be of a type specifically manufactured for marking and locating underground utilities. The metallic core of the tape shall be encased in a protective jacket or provided with other means to protect it from corrosion. Tape color shall be as specified in TABLE 1 and shall bear a continuous printed inscription describing the specific utility.

TABLE 1. Tape Color

Red:	Electric
Yellow:	Gas, Oil, Dangerous Materials
Orange:	Telephone, Telegraph, Television, Police, and Fire Communications
Blue:	Water Systems
Green:	Sewer Systems

2.3 Detection Wire For Non-Metalic Piping

Detection wire shall be insulated single strand, solid copper with a minimum diameter of 12 AWG.

PART 3 EXECUTION

3.1 EXCAVATION

Excavation shall be performed to the lines and grades indicated. Rock excavation shall include removal and disposition of material defined as rock in paragraph MATERIALS. Earth excavation shall include removal and disposal of material not classified as rock excavation. During excavation, material satisfactory for backfilling shall be stockpiled in an orderly manner at a distance from the banks of the trench equal to 1/2 the depth of the excavation, but in no instance closer than 2 feet. Excavated material not required or not satisfactory for backfill shall be removed from the site. Grading shall be done as may be necessary to prevent surface water from flowing into the excavation, and any water accumulating shall be removed to maintain the stability of the bottom and sides of the excavation. Unauthorized overexcavation shall be backfilled in accordance with paragraph BACKFILLING AND COMPACTION at no additional cost to the Government.

3.1.1 Trench Excavation Requirements

The trench shall be excavated as recommended by the manufacturer of the pipe to be installed. Trench walls below the top of the pipe shall be sloped, or made vertical, and of such width as recommended in the manufacturer's installation manual. Where no manufacturer's installation manual is available, trench walls shall be made vertical. Trench walls more than 2 feet high shall be shored, cut back to a stable slope, or provided with equivalent means of protection for employees who may be exposed to moving ground or cave in. Vertical trench walls more than 2 feet high shall be shored. Trench walls which are cut back shall be excavated to at least the angle of repose of the soil. Special attention shall be given to slopes which may be adversely affected by weather or moisture content. The trench width below the top of pipe shall not exceed 24 inches plus pipe outside diameter (O.D.) for pipes of less than 24 inches inside diameter and shall not exceed 36 inches plus pipe outside diameter for sizes larger than 24 inches inside diameter. Where recommended trench widths are exceeded, redesign, stronger pipe, or special installation procedures shall be utilized by the Contractor. The cost of redesign, stronger pipe, or special installation procedures shall be borne by the Contractor without any additional cost to the Government.

3.1.1.1 Bottom Preparation

The bottoms of trenches shall be accurately graded to provide uniform bearing and support for the bottom quadrant of each section of the pipe. Bell holes shall be excavated to the necessary size at each joint or coupling to eliminate point bearing. Stones of 1 inch or greater in any dimension, or as recommended by the pipe manufacturer, whichever is smaller, shall be removed to avoid point bearing.

3.1.1.2 Removal of Unyielding Material

Where unyielding material is encountered in the bottom of the trench, such material shall be removed 2 inches below the required grade and replaced with suitable materials as provided in paragraph BACKFILLING AND COMPACTION.

3.1.1.3 Removal of Unstable Material

Where unstable material is encountered in the bottom of the trench, such material shall be removed to the depth directed and replaced to the proper grade with select granular material as provided in paragraph BACKFILLING AND COMPACTION. When removal of unstable material is required due to the Contractor's fault or neglect in performing the work, the resulting material shall be excavated and replaced by the Contractor without additional cost to the Government.

3.1.1.4 Excavation for Appurtenances

Excavation for manholes, catch-basins, inlets, or similar structures shall be sufficient to leave at least 12 inches clear between the outer structure surfaces and the face of the excavation or support members Rock shall be cleaned of loose debris and cut to a firm surface either level, stepped, or serrated, as shown or as directed. Loose disintegrated rock and thin strata shall be removed. Removal of unstable material shall be as specified above. When concrete or masonry is to be placed in an excavated area, special care shall be taken not to disturb the bottom of the excavation. Excavation to the final grade level shall not be made until just before the concrete or masonry is to be placed.

3.1.2 Stockpiles

Stockpiles of satisfactory materials shall be placed and graded as specified. Stockpiles shall be kept in a neat and well drained condition, giving due consideration to drainage at all times. The ground surface at stockpile locations shall be cleared, grubbed, and sealed by rubber-tired equipment, excavated satisfactory and unsatisfactory materials shall be separately stockpiled. Stockpiles of satisfactory materials shall be protected from contamination which may destroy the quality and fitness of the stockpiled material. If the Contractor fails to protect the stockpiles, and any material becomes unsatisfactory, such material shall be removed and replaced with satisfactory material from approved sources at no additional cost to the Government. Locations of stockpiles of satisfactory materials shall be subject to prior approval of the Contracting Officer.

3.2 BACKFILLING AND COMPACTION

Backfill material shall consist of satisfactory material, select granular material, or initial backfill material as required. Backfill shall be placed in layers not exceeding 6 inches loose thickness for compaction by hand operated machine compactors, and 8 inches loose thickness for other than hand operated machines, unless otherwise specified. Each layer shall be compacted to at least 95 percent maximum density for cohesionless soils and 90 percent maximum density for cohesive soils, unless otherwise specified.

3.2.1 Trench Backfill

Trenches shall be backfilled to the grade shown. The trench shall be backfilled to 1 foot above the top of pipe prior to performing the required pressure tests. The joints and couplings shall be left uncovered during the pressure test.

3.2.1.1 Replacement of Unyielding Material

Unyielding material removed from the bottom of the trench shall be replaced with select granular material or initial backfill material.

3.2.1.2 Replacement of Unstable Material

Unstable material removed from the bottom of the trench or excavation shall be replaced with select granular material placed in layers not exceeding 6 inches loose thickness.

3.2.1.3 Bedding and Initial Backfill

Bedding shall be of the type and thickness shown. Initial backfill material shall be placed and compacted with approved tampers to a height of at least one foot above the utility pipe or conduit. The backfill shall be brought up evenly on both sides of the pipe for the full length of the pipe. Care shall be taken to ensure thorough compaction of the fill under the haunches of the pipe.

3.2.1.4 Final Backfill

The remainder of the trench, except for special materials for roadways, railroads and airfields, shall be filled with satisfactory material. Backfill material shall be placed and compacted as follows:

a. Roadways, Railroads, and Airfields: Backfill shall be placed up to the elevation at which the requirements in Section 02300A EARTHWORK control. Water flooding or jetting methods of compaction will not be permitted.

b. Sidewalks, Turfed or Seeded Areas and Miscellaneous Areas: Backfill shall be deposited in layers of a maximum of 12 inch loose thickness, and compacted to 85 percent maximum density for cohesive soils and 90 percent maximum density for cohesionless soils. Compaction by water flooding or jetting will not be permitted. This requirement shall also apply to all other areas not specifically designated above.

3.2.2 Backfill for Appurtenances

After the manhole, catchbasin, inlet, or similar structure has been constructed and the concrete has been allowed to cure for 5 days, backfill shall be placed in such a manner that the structure will not be damaged by the shock of falling earth. The backfill material shall be deposited and compacted as specified for final backfill, and shall be brought up evenly on all sides of the structure to prevent eccentric loading and excessive stress.

3.3 SPECIAL REQUIREMENTS

Special requirements for both excavation and backfill relating to the specific utilities are as follows:

3.3.1 Gas Distribution

Trenches shall be excavated to a depth that will provide not less than 18 inches of cover in rock excavation and not less than 24 inches of cover in other excavation. Trenches shall be graded as specified for pipe-laying requirements herein.

3.3.2 Water Lines

Trenches shall be of a depth to provide a minimum cover of 2 feet from the existing ground surface, or from the indicated finished grade, whichever is lower, to the top of the pipe.

3.3.3 Heat Distribution System

Initial backfill material shall be free of stones larger than 1/4 inch in any dimension.

3.3.4 Electrical Distribution System

Direct burial cable and conduit or duct line shall have a minimum cover of 24 inches from the finished grade, unless otherwise indicated.

3.3.5 Plastic Marking Tape

Warning tapes or wires shall be installed directly above the pipe, at a depth of 18 inches below finished grade unless otherwise shown.

3.4 TESTING

Testing shall be the responsibility of the Contractor and shall be performed at no additional cost to the Government.

3.4.1 Testing Facilities

Tests shall be performed by an approved commercial testing laboratory or may be tested by facilities furnished by the Contractor. No work requiring testing will be permitted until the facilities have been inspected and approved by the Contracting Officer.

3.4.2 Testing of Backfill Materials

Classification of backfill materials shall be determined in accordance with ASTM D 2487 and the moisture-density relations of soils shall be determined in accordance with ASTM D 1557. A minimum of one soil classification and one moisture-density relation test shall be performed on each different type of material used for bedding and backfill.

3.4.3 Field Density Tests

Tests shall be performed in sufficient numbers to ensure that the specified density is being obtained. A minimum of one field density test per lift of backfill for every 200 feet of installation shall be performed. One moisture density relationship shall be determined for every 1500 cubic yards of material used. Field in-place density shall be determined in accordance with ASTM D 1556.

3.4.4 Displacement of Sewers

After other required tests have been performed and the trench backfill compacted to the finished grade surface, the pipe shall be inspected to determine whether significant displacement has occurred. This inspection shall be conducted in the presence of the Contracting Officer. Pipe sizes larger than 36 inches shall be entered and examined, while smaller diameter pipe shall be inspected by shining a light or laser between manholes or manhole locations, or by the use of television cameras passed through the pipe. If, in the judgement of the Contracting Officer, the interior of the pipe shows poor alignment or any other defects that would cause improper functioning of the system, the defects shall be remedied as directed at no additional cost to the Government.

-- End of Section --

SECTION TABLE OF CONTENTS

DIVISION 02 - SITE CONSTRUCTION

SECTION 02364A

TERMITICIDE TREATMENT MEASURES FOR SUBTERRANEAN TERMITE CONTROL

06/98

PART 1 GENERAL

1.1 SUBMITTALS
1.2 QUALIFICATIONS
1.3 SAFETY REQUIREMENTS
1.4 DELIVERY, STORAGE, AND HANDLING
1.4.1 Delivery
1.4.2 Storage
1.4.3 Handling
1.5 INSPECTION
1.6 WARRANTY

PART 2 PRODUCTS

2.1 TERMITICIDES

PART 3 EXECUTION

3.1 TECHNICAL REPRESENTATIVE
3.2 SITE PREPARATION
3.2.1 Ground Preparation
3.2.2 Verification
3.2.3 Foundation Exterior
3.2.4 Utilities
3.3 SITE CONDITIONS
3.3.1 Soil Moisture
3.3.2 Runoff and Wind Drift
3.3.2.1 Vapor Barriers and Waterproof Membranes
3.3.2.2 Utilities and Vents
3.3.3 Placement of Concrete
3.4 TERMITICIDE TREATMENT
3.4.1 Equipment Calibration and Tank Measurement
3.4.2 Mixing and Application
3.4.3 Treatment Method
3.4.3.1 Surface Application
3.4.3.2 Rodding and Trenching
3.4.4 Sampling
3.5 VERIFICATION OF MEASUREMENT
3.6 CLEAN UP, DISPOSAL, AND PROTECTION
3.6.1 Clean Up
3.6.2 Disposal of Termiticide
3.6.3 Protection of Treated Area
3.7 CONDITIONS FOR SATISFACTORY TREATMENT
3.7.1 Equipment Calibrations and Measurements
3.7.2 Testing
3.7.3 Disturbance of Treated Soils
3.7.4 Termites Found Within the Warranty Period
3.8 RE-TREATMENT

-- End of Section Table of Contents --

UFGS-02364A(June 1998)

SECTION 02364A

TERMITICIDE TREATMENT MEASURES FOR SUBTERRANEAN TERMITE CONTROL
06/98

PART 1 GENERAL

1.1 SUBMITTALS

Government approval is required for submittals with a "G" designation; submittals not having a "G" designation are for information only. When used, a designation following the "G" designation identifies the office that will review the submittal for the Government. The following shall be submitted in accordance with Section 01330 SUBMITTAL PROCEDURES:

SD-03 Product Data

Termiticide Application Plan;

Termiticide application plan with proposed sequence of treatment work with dates and times. The termiticide trade name, EPA registration number, chemical composition, formulation, concentration of original and diluted material, application rate of active ingredients, method of application, area/volume treated, amount applied; and the name and state license number of the state certified applicator shall be included.

Termiticides

Manufacturer's label and Material Safety Data Sheet (MSDS) for termiticides proposed for use.

Foundation Exterior

Written verification that other site work will not disturb the treatment.

Utilities and Vents

Written verification that utilities, vents have been located.

Verification of Measurement

Written verification that the volume of termiticide used meets the application rate.

Application Equipment

A listing of equipment to be used.

SD-06 Test Reports

Equipment Calibration and Tank Measurement

Certification of calibration tests conducted on the equipment used in the termiticide application.

Soil Moisture

Soil moisture test result.

SD-07 Certificates

Qualifications

Qualifications and state license number of the termiticide applicator.

1.2 QUALIFICATIONS

The Contractor's principal business shall be pest control. The Contractor shall be licensed and the termiticide applicators certified in the state where the work is to be performed. Termiticide applicators shall also be certified in the U.S. Environmental Protection Agency (EPA) pesticide applicator category which includes structural pest control.

1.3 SAFETY REQUIREMENTS

The Contractor shall formulate, treat, and dispose of termiticides and their containers in accordance with label directions. Use the clothing and personal protective equipment specified on the labeling for use during all phases of the application.

1.4 DELIVERY, STORAGE, AND HANDLING

1.4.1 Delivery

Termiticide material shall be delivered to the site in the original unopened containers bearing legible labels indicating the EPA registration number and manufacturer's registered uses. All other materials to be used on site for the purpose of termite control shall be delivered in new or otherwise good condition as supplied by the manufacturer or formulator.

1.4.2 Storage

Materials shall be stored in designated areas and in accordance with manufacturer's labels. Termiticides and related materials shall be kept under lock and key when unattended.

1.4.3 Handling

Termiticides shall be handled in accordance with manufacturer's labels. Manufacturer's warnings and precautions shall be observed. Materials shall be handled preventing contamination by dirt, water, and organic material. Protect termiticides from sunlight as recommended by the manufacturer.

1.5 INSPECTION

Termiticides shall be inspected upon arrival at the job site for conformity to type and quality in accordance with paragraph TERMITICIDE. Each label shall bear evidence of registration under the Federal Insecticide, Fungicide, and Rodenticide Act (FIFRA), as amended. Other materials shall be inspected for conformance with specified requirements. Unacceptable

materials shall be removed from the job site.

1.6 WARRANTY

The Contractor shall provide a 5 -year written warranty against infestations or reinfestations by subterranean termites of the buildings or building additions constructed under this contract. Warranty shall include annual inspections of the buildings or building additions.

PART 2 PRODUCTS

2.1 TERMITICIDES

Termiticides shall be currently registered by the EPA. Termiticide shall be selected for maximum effectiveness and duration after application. The selected termiticide shall be suitable for the soil and climatic conditions at the project site.

PART 3 EXECUTION

3.1 TECHNICAL REPRESENTATIVE

The certified installation pest management coordinator shall be the technical representative, and shall be present at all meetings concerning treatment measures for subterranean termites. They may be present during treatment application.

3.2 SITE PREPARATION

Site preparation shall be in accordance with Sections 02300A EARTHWORK, and 02315A EXCAVATION, FILLING AND BACKFILLING FOR BUILDINGS. Work related to final grades, landscape plantings, foundations, or any other alterations to finished construction which might alter the condition of treated soils, shall be coordinated with this specification.

3.2.1 Ground Preparation

Food sources shall be eliminated by removing debris from clearing and grubbing and post construction wood scraps such as ground stakes, form boards, and scrap lumber from the site, before termiticide application begins.

3.2.2 Verification

Before work starts, the Contractor shall verify that final grades are as indicated and smooth grading has been completed in accordance with Section 02300A EARTHWORK. Soil particles shall be finely graded with particles no larger than 1 inch and compacted to eliminate soil movement to the greatest degree.

3.2.3 Foundation Exterior

The Contractor shall provide written verification that final grading and landscape planting operations will not disturb treatment of the soil on the exterior sides of foundation walls, grade beams, and similar structures.

3.2.4 Utilities

The Contractor shall provide written verification that the location and

identity of HVAC ducts and vents, water and sewer lines, and plumbing have been accomplished prior to the termiticide application.

3.3 SITE CONDITIONS

The following conditions shall determine the time of application.

3.3.1 Soil Moisture

Soils to be treated shall be tested immediately before application. Soil moisture content shall be tested to a minimum depth of 3 inches. The soil moisture shall be as recommended by the termiticide manufacturer. The termiticide will not be applied when soil moisture exceeds manufacturer's recommendations because termiticides do not adhere to the soil particles in saturated soils.

3.3.2 Runoff and Wind Drift

Termiticide shall not be applied during or immediately following heavy rains. Applications shall not be performed when conditions may cause runoff or create an environmental hazard. Applications shall not be performed when average wind speed exceeds 10 miles per hour. The termiticide shall not be allowed to enter water systems, aquifers, or endanger humans or animals.

3.3.2.1 Vapor Barriers and Waterproof Membranes

Termiticide shall be applied prior to placement of a vapor barrier or waterproof membrane.

3.3.2.2 Utilities and Vents

Prior to application, HVAC ducts and vents located in treatment area shall be turned off and blocked to protect people and animals from termiticide.

3.3.3 Placement of Concrete

Concrete covering treated soils shall be placed as soon as the termiticide has reached maximum penetration into the soil. Time for maximum penetration shall be as recommended by the manufacturer.

3.4 TERMITICIDE TREATMENT

3.4.1 Equipment Calibration and Tank Measurement

Immediately prior to commencement of termiticide application, calibration tests shall be conducted on the application equipment to be used and the application tank shall be measured to determine the volume and contents. These tests shall confirm that the application equipment is operating within the manufacturer's specifications and will meet the specified requirements. The Contractor shall provide written certification of the equipment calibration test results within 1 week of testing.

3.4.2 Mixing and Application

Formulating, mixing, and application shall be performed in the presence of the Contracting Officer or the technical representative. A closed system is recommended as it prevents the termiticide from coming into contact with the applicator or other persons. Water for formulating shall only come

from designated locations. Filling hoses shall be fitted with a backflow preventer meeting local plumbing codes or standards. Overflow shall be prevented during the filling operation. Prior to each day of use, the equipment used for applying termiticides shall be inspected for leaks, clogging, wear, or damage. Any repairs are to be performed immediately.

3.4.3 Treatment Method

For areas to be treated, the Contractor shall establish complete and unbroken vertical and/or horizontal soil poison barriers between the soil and all portions of the intended structure which may allow termite access to wood and wood related products.

3.4.3.1 Surface Application

Surface application shall be used for establishing horizontal barriers. Surface applicants shall be applied as a coarse spray and provide uniform distribution over the soil surface. Termiticide shall penetrate a minimum of 1 inch into the soil, or as recommended by the manufacturer.

3.4.3.2 Rodding and Trenching

Rodding and trenching shall be used for establishing vertical soil barriers. Trenching shall be to the depth of the foundation footing. Width of trench shall be as recommended by the manufacturer, or as indicated. Rodding or other approved method may be implemented for saturating the base of the trench with termiticide. Immediately after termiticide has reached maximum penetration as recommended by the manufacturer, backfilling of the trench shall commence. Backfilling shall be in 6 inch rises or layers. Each rise shall be treated with termiticide.

3.4.4 Sampling

The Contracting Officer may draw from stocks at the job site, at any time and without prior notice, samples of the termiticides used to determine if the amount of active ingredient specified on the label is being applied.

3.5 VERIFICATION OF MEASUREMENT

Once termiticide application has been completed, tank contents shall be measured to determine the remaining volume. The total volume measurement of used contents for the application shall equal the established application rate for the project site conditions. The Contractor shall provide written verification of the measurements.

3.6 CLEAN UP, DISPOSAL, AND PROTECTION

Once application has been completed, the Contractor shall proceed with clean up and protection of the site without delay.

3.6.1 Clean Up

The site shall be cleaned of all material associated with the treatment measures, according to label instructions, and as indicated. Excess and waste material shall be removed and disposed off site.

3.6.2 Disposal of Termiticide

The Contractor shall dispose of residual termiticides and containers off

Government property, and in accordance with label instructions and EPA criteria.

3.6.3 Protection of Treated Area

Immediately after the application, the area shall be protected from other use by erecting barricades and providing signage as required or directed.

3.7 CONDITIONS FOR SATISFACTORY TREATMENT

3.7.1 Equipment Calibrations and Measurements

Where results from the equipment calibration and tank measurements tests are unsatisfactory, re-treatment will be required.

3.7.2 Testing

Should an analysis, performed by a third party, indicate that the samples of the applied termiticide contain less than the amount of active ingredient specified on the label, and/or if soils are treated to a depth less than specified or approved, re-treatment will be required.

3.7.3 Disturbance of Treated Soils

Soil and fill material disturbed after treatment shall be re-treated before placement of slabs or other covering structures.

3.7.4 Termites Found Within the Warranty Period

If live subterranean termite infestation or termite damage is discovered during the warranty period, the Contractor shall re-treat the site.

3.8 RE-TREATMENT

Where re-treatment is required, the Contractor shall:

a. Re-treat the soil and/or perform other treatment as necessary for prevention or elimination of subterranean termite infestation.

b. Repair damage caused by termite infestation.

-- End of Section --

SECTION TABLE OF CONTENTS

DIVISION 02 - SITE CONSTRUCTION

SECTION 02510A

WATER DISTRIBUTION SYSTEM

05/02

PART 1 GENERAL

1.1 REFERENCES
1.2 PIPING
1.2.1 Service Lines
1.2.2 Distribution Lines 80 mm (3 Inches) or Larger
1.2.3 Omitted
1.2.4 Sprinkler Supply Lines
1.2.5 Potable Water Lines
1.2.6 Plastic Piping System
1.2.7 Excavation, Trenching, and Backfilling
1.3 OMITTED
1.4 MANUFACTURER'S REPRESENTATIVE
1.5 SUBMITTALS
1.6 HANDLING
1.6.1 Coated and Wrapped Steel Pipe
1.6.2 Polyethylene (PE) Pipe Fittings and Accessories
1.6.3 Miscellaneous Plastic Pipe and Fittings

PART 2 PRODUCTS

2.1 PIPE
2.1.1 Omitted
2.1.2 Plastic Pipe
2.1.2.1 PE Plastic Pipe
2.1.2.2 PVC Plastic Pipe
2.1.2.3 Oriented Polyvinyl Chloride (PVCO) Plastic Pipe
2.1.3 Reinforced Plastic Mortar Pressure (RPMP) Pipe
2.1.4 Reinforced Thermosetting Resin Pipe (RTRP)
2.1.4.1 RTRP-I
2.1.4.2 RTRP-II
2.1.5 Ductile-Iron Pipe
2.1.6 Omitted
2.1.7 Copper Tubing
2.2 FITTINGS AND SPECIALS
2.2.1 Omitted
2.2.2 PVC Pipe System
2.2.3 RTRP and RPMP Pipe
2.2.4 Ductile-Iron Pipe System
2.2.5 Omitted
2.2.6 Copper Tubing System
2.3 JOINTS
2.3.1 Omitted
2.3.2 Plastic Pipe Jointing
2.3.2.1 PE Pipe
2.3.2.2 PVC Pipe
2.3.2.3 PVCO Pipe
2.3.3 RPMP Pipe

2.3.4 RTRP Pipe
2.3.4.1 RTRP-I, Grade 1 and 2
2.3.4.2 RTRP-II, Grade 1 and 2
2.3.5 Ductile-Iron Pipe Jointing
2.3.6 Omitted
2.3.7 Bonded Joints
2.3.8 Isolation Joints
2.3.9 Copper Tubing Jointing
2.4 VALVES
2.4.1 Check Valves
2.4.2 Gate Valves
2.4.3 Omitted
2.4.4 Indicator Post for Valves
2.5 VALVE BOXES
2.6 OMITTED
2.7 FIRE HYDRANTS
2.8 OMITTED
2.9 MISCELLANEOUS ITEMS
2.9.1 Service Clamps
2.9.2 Corporation Stops
2.9.3 Goosenecks
2.9.4 Service Stops
2.9.5 Tapping Sleeves
2.9.6 Omitted
2.9.7 Disinfection
2.9.8 Meters
2.9.8.1 Displacement Type
2.9.9 Meter Boxes

PART 3 EXECUTION

3.1 INSTALLATION
3.1.1 Cutting of Pipe
3.1.2 Adjacent Facilities
3.1.2.1 Sewer Lines
3.1.2.2 Water Lines
3.1.2.3 Copper Tubing Lines
3.1.2.4 Nonferrous Metallic Pipe
3.1.2.5 Omitted
3.1.2.6 Structures
3.1.3 Joint Deflection
3.1.3.1 Allowable for Reinforced Concrete Pipe
3.1.3.2 Offset for Flexible Plastic Pipe
3.1.3.3 Allowable for Ductile-Iron Pipe
3.1.3.4 Omitted
3.1.3.5 Allowable for RPMP Pipe
3.1.4 Placing and Laying
3.1.4.1 Omitted
3.1.4.2 Plastic Pipe Installation
3.1.4.3 Piping Connections
3.1.4.4 Penetrations
3.1.4.5 Flanged Pipe
3.1.5 Jointing
3.1.5.1 Omitted
3.1.5.2 PE Pipe Requirements
3.1.5.3 PVC Plastic Pipe Requirements
3.1.5.4 RTRP I, RTRP II and RPMP Pipe
3.1.5.5 Ductile-Iron Pipe Requirements
3.1.5.6 Omitted

3.1.5.7 Omitted
3.1.5.8 Copper Tubing Requirements
3.1.5.9 Bonded Joints Requirements
3.1.5.10 Isolation Joints and Dielectric Fittings
3.1.5.11 Transition Fittings
3.1.6 Installation of Service Lines
3.1.6.1 Service Lines 50 mm (2 Inches) and Smaller
3.1.6.2 Service Lines Larger than 50 mm (2 Inches)
3.1.6.3 Service Lines for Sprinkler Supplies
3.1.7 Omitted
3.1.8 Setting of Fire Hydrants, Meters, Valves and Valve Boxes
3.1.8.1 Location of Fire Hydrants
3.1.8.2 Location of Meters
3.1.8.3 Location of Valves
3.1.9 Tapped Tees and Crosses
3.1.10 Thrust Restraint
3.1.10.1 Thrust Blocks
3.1.10.2 Restrained Joints
3.2 HYDROSTATIC TESTS
3.2.1 Pressure Test
3.2.2 Leakage Test
3.2.3 Time for Making Test
3.2.4 Concurrent Hydrostatic Tests
3.3 BACTERIAL DISINFECTION
3.3.1 Bacteriological Disinfection
3.4 CLEANUP

-- End of Section Table of Contents --

UFGS-02510A (May 2002)

SECTION 02510A

WATER DISTRIBUTION SYSTEM
05/02

PART 1 GENERAL

1.1 REFERENCES

The publications listed below form a part of this specification to the extent referenced. The publications are referred to in the text by basic designation only.

AMERICAN SOCIETY FOR TESTING AND MATERIALS (ASTM)

ASTM B 88	(1996) Seamless Copper Water Tube
ASTM D 1599	(1999) Resistance to Short-Time Hydraulic Failure Pressure of Plastic Pipe, Tubing, and Fittings
ASTM D 1784	(1999a) Rigid Poly(Vinyl Chloride) (PVC) Compounds and Chlorinated Poly(Vinyl Chloride) (CPVC) Compounds
ASTM D 1785	(1999) Poly(Vinyl Chloride) (PVC) Plastic Pipe, Schedules 40, 80, and 120
ASTM D 2241	(1996b) Poly(Vinyl Chloride) (PVC) Pressure-Rated Pipe (SDR Series)
ASTM D 2464	(1999) Threaded Poly(Vinyl Chloride) (PVC) Plastic Pipe Fittings, Schedule 80
ASTM D 2466	(1999) Poly(Vinyl Chloride) (PVC) Plastic Pipe Fittings, Schedule 40
ASTM D 2467	(1999) Poly(Vinyl Chloride) (PVC) Plastic Pipe Fittings, Schedule 80
ASTM D 2564	(1996a) Solvent Cements for Poly(Vinyl Chloride) (PVC) Plastic Piping Systems
ASTM D 2657	(1997) Heat Fusion Joining Polyolefin Pipe and Fittings
ASTM D 2774	(1994) Underground Installation of Thermoplastic Pressure Piping
ASTM D 2855	(1996) Making Solvent-Cemented Joints with Poly(Vinyl Chloride) (PVC) Pipe and Fittings
ASTM D 2996	(1995) Filament-Wound "Fiberglass"

	(Glass-Fiber-Reinforced Thermosetting-Resin) Pipe
ASTM D 2997	(1995) Centrifugally Cast "Fiberglass" (Glass-Fiber-Reinforced Thermosetting-Resin) Pipe
ASTM D 3139	(1998) Joints for Plastic Pressure Pipes Using Flexible Elastomeric Seals
ASTM D 3839	(1994a) Underground Installation of "Fiberglass" (Glass-Fiber-Reinforced Thermosetting Resin) Pipe
ASTM D 4161	(1996) "Fiberglass"(Glass-Fiber-Reinforced Thermosetting Resin) Pipe Joints Using Elastomeric Seals
ASTM F 477	(1999) Elastomeric Seals (Gaskets) for Joining Plastic Pipe
ASTM F 1483	(1998) Oriented Poly(Vinyl Chloride), PVCO, Pressure Pipe

ASME INTERNATIONAL (ASME)

ASME B1.20.1	(1983; R 1992) Pipe Threads, General Purpose (Inch)
ASME B16.1	(1998) Cast Iron Pipe Flanges and Flanged Fittings
ASME B16.26	(1988) Cast Copper Alloy Fittings for Flared Copper Tubes

AMERICAN WATER WORKS ASSOCIATION (AWWA)

AWWA B300	(1992) Hypochlorites
AWWA B301	(1992) Liquid Chlorine
AWWA C104	(1995) Cement-Mortar Lining for Ductile-Iron Pipe and Fittings for Water
AWWA C110	(1993) Ductile-Iron and Gray-Iron Fittings, 3 In. Through 48 In. (75 mm through 1200 mm), for Water and Other Liquids
AWWA C111	(1995) Rubber-Gasket Joints for Ductile-Iron Pressure Pipe and Fittings
AWWA C115	(1996) Flanged Ductile-Iron Pipe With Ductile-Iron or Gray-Iron Threaded Flanges
AWWA C151	(1996) Ductile-Iron Pipe, Centrifugally Cast, for Water or Other Liquids
AWWA C153	(1994; Errata Nov 1996) Ductile-Iron

	Compact Fittings, 3 In. Through 24 In. (76 mm through 610 mm) and 54 In. through 64 In. (1,400 mm through 1,600 mm) for Water Service
AWWA C203	(1997) Coal-Tar Protective Coatings and Linings for Steel Water Pipelines - Enamel and Tape - Hot-Applied
AWWA C500	(1993; C500a) Metal-Sealed Gate Valves for Water Supply Service
AWWA C502	(1994; C502a) Dry-Barrel Fire Hydrants
AWWA C509	(1994; Addendum 1995) Resilient-Seated Gate Valves for Water Supply Service
AWWA C600	(1993) Installation of Ductile-Iron Water Mains and Their Appurtenances
AWWA C606	(1997) Grooved and Shouldered Joints
AWWA C700	(1995) Cold-Water Meters - Displacement Type, Bronze Main Case
AWWA C706	(1996) Direct-Reading, Remote-Registration Systems for Cold-Water Meters
AWWA C707	(1982; R 1992) Encoder-Type Remote-Registration Systems for Cold-Water Meters
AWWA C800	(1989) Underground Service Line Valves and Fittings
AWWA C900	(1997; C900a) Polyvinyl Chloride (PVC) Pressure Pipe, 4 In. Through 12 In., for Water Distribution
AWWA C901	(1996) Polyethylene (PE) Pressure Pipe and Tubing, 1/2 In. Through 3 In., for Water Service
AWWA C905	(1997) Polyvinyl Chloride (PVC) Water Transmission Pipe, Nominal Diameters 14 In. Through 36 In.
AWWA C909	(1998) Molecularly Oriented Polyvinyl Chloride (PVCO) Pressure Pipe, 4 IN through 12 IN (100 mm through 300 mm), for Water Distribution
AWWA C950	(1995) Fiberglass Pressure Pipe
AWWA M23	(1980) Manual: PVC Pipe - Design and Installation

ASBESTOS CEMENT PIPE PRODUCERS ASSOCIATION (ACPPA)

ACPPA 1344	(1988) Recommended Work Practices for A/C Pipe

DUCTILE IRON PIPE RESEARCH ASSOCIATION (DIPRA)

DIPRA TRD	(1997) Thrust Restraint Design for Ductile Iron Pipe

MANUFACTURERS STANDARDIZATION SOCIETY OF THE VALVE AND FITTINGS INDUSTRY (MSS)

MSS SP-80	(1997) Bronze Gate, Globe, Angle and Check Valves

NATIONAL FIRE PROTECTION ASSOCIATION (NFPA)

NFPA 24	(1995) Installation of Private Fire Service Mains and Their Appurtenances
NFPA 49	(1994) Hazardous Chemicals Data
NFPA 325-1	(1994) Fire Hazard Properties of Flammable Liquids, Gases, and Volatile Solids
NFPA 704	(1996) Identification of the Fire Hazards of Materials for Emergency Response

NSF INTERNATIONAL (NSF)

NSF 14	(1998) Plastics Piping Components and Related Materials
NSF 61	(1999) Drinking Water System Components - Health Effects (Sections 1-9)

THE SOCIETY FOR PROTECTIVE COATINGS (SSPC)

SSPC Paint 21	(1991) White or Colored Silicone Alkyd Paint
SSPC Paint 25	(1991) Red Iron Oxide, Zinc Oxide, Raw Linseed Oil and Alkyd Primer (Without Lead and Chromate Pigments)

1.2 PIPING

This section covers water distribution lines, service lines, and connections to building service at a point approximately 5 feet outside buildings and structures to which service is required. The Contractor shall have a copy of the manufacturer's recommendations for each material or procedure to be utilized available at the construction site at all times.

1.2.1 Service Lines

Piping for water service lines less than 3 inchesin diameter shall be galvanized steel, polyvinyl chloride (PVC) plastic, Oriented PVC plastic polyethylene, or copper tubing, unless otherwise shown or specified.

Piping for water service lines 3 inchesand larger shall be ductile iron, polyvinyl chloride (PVC) plastic, filament-wound or centrifugally cast reinforced thermosetting resin, reinforced plastic mortar pressure pipe or steel, unless otherwise shown or specified.

1.2.2 Distribution Lines 80 mm (3 Inches) or Larger

Piping for water distribution lines 3 inches or larger shall be ductile iron, polyvinyl chloride (PVC) through 36 inch nominal diameter plastic, Oriented PVC plastic filament-wound or centrifugally cast reinforced thermosetting resin, reinforced plastic mortar pressure pipe, or reinforced concrete, unless otherwise shown or specified.

1.2.3 Omitted

1.2.4 Sprinkler Supply Lines

Piping for water lines supplying sprinkler systems for building fire protection shall conform to NFPA 24 from the point of connection with the water distribution system to the building 5 foot line.

1.2.5 Potable Water Lines

Piping and components of potable water systems which come in contact with the potable water shall conform to NSF 61.

1.2.6 Plastic Piping System

Plastic piping system components (PVC, polyethylene, thermosetting resin and reinforced plastic mortar pressure) intended for transportation of potable water shall comply with NSF 14 and be legibly marked with their symbol.

1.2.7 Excavation, Trenching, and Backfilling

Excavation, trenching, and backfilling shall be in accordance with the applicable provisions of Section 02316A EXCAVATION, TRENCHING, AND BACKFILLING FOR UTILITIES SYSTEMS, except as modified herein.

1.3 OMITTED

1.4 MANUFACTURER'S REPRESENTATIVE

The Contractor shall have a manufacturer's field representative present at the jobsite during the installation and testing of PE, RTRP, and/or RPMP pipe to provide technical assistance and to verify that the materials are being installed in accordance with the manufacturer's prescribed procedures. When the representative feels that the Contractor is installing and testing the PE, RTRP, and/or RPMP pipe in a satisfactory manner, certification shall be written to note which individuals employed by the Contractor are capable of properly installing the pipe. The field representative shall advise the Contractor of unsatisfactory conditions immediately when they occur. Such conditions include improper diameter of pipe ends, damaged interior liner, poorly prepared joints, improper curing of joints, moving pipe before joints are cured, bending pipe to follow abrupt changes in trench contours, leaving pipe ends open in trench overnight, not properly drying joints after rain storms, exceeding effective adhesive life, sharp objects in trench bed, backfill that could damage pipe, improper procedure for concrete encasement of pipe, omission

of thrust blocks at changes in direction or any other condition which could have an adverse effect on the satisfactory completion and operation of the piping system.

1.5 SUBMITTALS

Government approval is required for submittals with a "G" designation; submittals not having a "G" designation are for information only. When used, a designation following the "G" designation identifies the office that will review the submittal for the Government. The following shall be submitted in accordance with Section 01330 SUBMITTAL PROCEDURES:

SD-03 Product Data

Installation

The manufacturer's recommendations for each material or procedure to be utilized.

SD-06 Test Reports

Bacterial Disinfection; G.

Test results from commercial laboratory verifying disinfection.

SD-07 Certificates

Installation

A statement signed by the manufacturer's field representative certifying that the Contractor's personnel are capable of properly installing the pipe on the project.

1.6 HANDLING

Pipe and accessories shall be handled to ensure delivery to the trench in sound, undamaged condition, including no injury to the pipe coating or lining. If the coating or lining of any pipe or fitting is damaged, the repair shall be made by the Contractor in a satisfactory manner, at no additional cost to the Government. No other pipe or material shall be placed inside a pipe or fitting after the coating has been applied. Pipe shall be carried into position and not dragged. Use of pinch bars and tongs for aligning or turning pipe will be permitted only on the bare ends of the pipe. The interior of pipe and accessories shall be thoroughly cleaned of foreign matter before being lowered into the trench and shall be kept clean during laying operations by plugging or other approved method. Before installation, the pipe shall be inspected for defects. Material found to be defective before or after laying shall be replaced with sound material without additional expense to the Government. Rubber gaskets that are not to be installed immediately shall be stored in a cool and dark place.

1.6.1 Coated and Wrapped Steel Pipe

Coated and wrapped steel pipe shall be handled in conformance with AWWA C203.

1.6.2 Polyethylene (PE) Pipe Fittings and Accessories

PE pipe, fittings, and accessories shall be handled in conformance with

AWWA C901.

1.6.3 Miscellaneous Plastic Pipe and Fittings

Polyvinyl Chloride (PVC), Reinforced Thermosetting Resin Pipe (RTRP), and Reinforced Plastic Mortar Pressure (RPMP) pipe and fittings shall be handled and stored in accordance with the manufacturer's recommendations. Storage facilities shall be classified and marked in accordance with NFPA 704, with classification as indicated in NFPA 49 and NFPA 325-1.

PART 2 PRODUCTS

2.1 PIPE

Pipe shall conform to the respective specifications and other requirements specified below.

2.1.1 Omitted

2.1.2 Plastic Pipe

2.1.2.1 PE Plastic Pipe

Pipe, tubing, and heat-fusion fittings shall conform to AWWA C901.

2.1.2.2 PVC Plastic Pipe

Pipe, couplings and fittings shall be manufactured of material conforming to ASTM D 1784, Class 12454B.

a. Pipe Less Than 4 inch Diameter:

(1) Screw-Joint: Pipe shall conform to dimensional requirements of ASTM D 1785 Schedule 80, with joints meeting requirements of 150 psi working pressure, 200 psi hydrostatic test pressure, unless otherwise shown or specified. Pipe couplings when used, shall be tested as required by ASTM D 2464.

(2) Elastomeric-Gasket Joint: Pipe shall conform to dimensional requirements of ASTM D 1785 Schedule 40, with joints meeting the requirements of 150 psi working pressure, 200 psi hydrostatic test pressure, unless otherwise shown or specified, or it may be pipe conforming to requirements of ASTM D 2241, elastomeric joint, with the following applications:

SDR	Maximum Working Pressure psi	Minimum Hydrostatic Pressure psi
26	100	133
21	120	160
17	150	200
13.5	200	266

(3) Solvent Cement Joint: Pipe shall conform to dimensional requirements of ASTM D 1785 or ASTM D 2241 with joints meeting the requirements of 150 psi working pressure and 200 psi hydrostatic test pressure.

b. Pipe 4 through 12 inch Diameter: Pipe, couplings and fittings shall conform to AWWA C900, Class 150, CIOD pipe dimensions, elastomeric-gasket joint, unless otherwise shown or specified.

c. Pipe 14 through 36 inch Diameter: Pipe shall conform to AWWA C905 unless otherwise shown or specified.

2.1.2.3 Oriented Polyvinyl Chloride (PVCO) Plastic Pipe

Pipe, couplings, and fittings shall be manufactured of material conforming to ASTM D 1784, Class 12454-B. Pipe shall conform to AWWA C909, Class 150, and to ASTM F 1483 and shall have an outside diameter equal to cast iron outside diameter.

2.1.3 Reinforced Plastic Mortar Pressure (RPMP) Pipe

RPMP shall be produced by centrifugal casting and shall have an OD 12 to 48 inches equal to ductile-iron, with a 150 psi pressure rating and with a minimum pipe stiffness of 36 psi. RPMP shall be in accordance with AWWA C950.

2.1.4 Reinforced Thermosetting Resin Pipe (RTRP)

Pipe shall have a quick-burst strength greater than or equal to four times the normal working pressure of the pipe. The quick-burst strength test shall conform to the requirements of ASTM D 1599.

2.1.4.1 RTRP-I

RTRP-I shall conform to ASTM D 2996, except pipe shall have an outside diameter equal to cast iron outside diameter or standard weight steel pipe. The pipe shall be suitable for a normal working pressure of 150 psi at 73 degrees F. The inner surface of the pipe shall have a smooth uniform continuous resin-rich surface liner conforming to ASTM D 2996.

2.1.4.2 RTRP-II

RTRP-II shall conform to ASTM D 2997. Pipe shall have an outside diameter equal to standard weight steel pipe.

2.1.5 Ductile-Iron Pipe

Ductile-iron pipe shall conform to AWWA C151, working pressure not less than 150 psi, unless otherwise shown or specified. Pipe shall be cement-mortar lined in accordance with AWWA C104. Linings shall be standard. Flanged ductile iron pipe with threaded flanges shall be in accordance with AWWA C115.

2.1.6 Omitted

2.1.7 Copper Tubing

Copper tubing shall conform to ASTM B 88, Type K, annealed.

2.2 FITTINGS AND SPECIALS

2.2.1 Omitted

2.2.2 PVC Pipe System

a. For pipe less than 4 inch diameter, fittings for threaded pipe shall conform to requirements of ASTM D 2464, threaded to conform to the requirements of ASME B1.20.1 for use with Schedule 80 pipe and fittings; fittings for solvent cement jointing shall conform to ASTM D 2466 or ASTM D 2467; and fittings for elastomeric-gasket joint pipe shall be iron conforming to AWWA C110 or AWWA C111. Iron fittings and specials shall be cement-mortar lined (standard thickness) in accordance with AWWA C104.

b. For pipe 4 inch diameter and larger, fittings and specials shall be iron, bell end in accordance with AWWA C110, 150 psi pressure rating unless otherwise shown or specified, except that profile of bell may have special dimensions as required by the pipe manufacturer; or fittings and specials may be of the same material as the pipe with elastomeric gaskets, all in conformance with AWWA C900. Iron fittings and specials shall be cement-mortar lined (standard thickness) in accordance with AWWA C104. Fittings shall be bell and spigot or plain end pipe, or as applicable. Ductile iron compact fittings shall be in accordance with AWWA C153.

2.2.3 RTRP and RPMP Pipe

Fittings and specials shall be compatible with the pipe supplied. Filament wound or molded fittings up to 6 inches shall conform to AWWA C950. Iron fittings shall be cement-mortar lined in accordance with AWWA C104 and shall conform to AWWA C110 and AWWA C111. Fittings shall be suitable for working and testing pressures specified for the pipe.

2.2.4 Ductile-Iron Pipe System

Fittings and specials shall be suitable for 150 psi pressure rating, unless otherwise specified. Fittings and specials for mechanical joint pipe shall conform to AWWA C110. Fittings and specials for use with push-on joint pipe shall conform to AWWA C110 and AWWA C111. Fittings and specials for grooved and shouldered end pipe shall conform to AWWA C606. Fittings and specials shall be cement-mortar lined (standard thickness) in accordance with AWWA C104. Ductile iron compact fittings shall conform to AWWA C153.

2.2.5 Omitted

2.2.6 Copper Tubing System

Fittings and specials shall be flared and conform to ASME B16.26.

2.3 JOINTS

2.3.1 Omitted

2.3.2 Plastic Pipe Jointing

2.3.2.1 PE Pipe

Joints for pipe fittings and couplings shall be strong tight joints as

specified for PE in Paragraph INSTALLATION. Joints connecting pipe of differing materials shall be made in accordance with the manufacturer's recommendation, and as approved by the Contracting Officer.

2.3.2.2 PVC Pipe

Joints, fittings, and couplings shall be as specified for PVC pipe. Joints connecting pipe of differing materials shall be made in accordance with the manufacturer's recommendations, and as approved by the Contracting Officer.

2.3.2.3 PVCO Pipe

Joints shall conform to ASTM D 3139. Elastomeric gaskets shall conform to ASTM F 477.

2.3.3 RPMP Pipe

Joints shall be bell and spigot gasket coupling utilizing an elastomeric gasket in accordance with ASTM D 4161.

2.3.4 RTRP Pipe

2.3.4.1 RTRP-I, Grade 1 and 2

Joints shall be bell and spigot with elastomeric gasket, mechanical coupling with elastomeric gasket, threaded and bonded coupling, or tapered bell and spigot with compatible adhesive. All RTRP-I materials shall be products of a single manufacturer.

2.3.4.2 RTRP-II, Grade 1 and 2

Joints shall be the bell and spigot type with elastomeric gasket, bell and spigot with adhesive, butt-jointed with adhesive bonded reinforced overlay, mechanical, flanged, threaded or commercially available proprietary joints, provided they are capable of conveying water at the pressure and temperature of the pipe.

2.3.5 Ductile-Iron Pipe Jointing

a. Mechanical joints shall be of the stuffing box type and shall conform to AWWA C111.

b. Push-on joints shall conform to AWWA C111.

c. Rubber gaskets and lubricants shall conform to the applicable requirements of AWWA C111.

2.3.6 Omitted

2.3.7 Bonded Joints

For all ferrous pipe, a metallic bond shall be provided at each joint, including joints made with flexible couplings, caulking, or rubber gaskets, of ferrous metallic piping to effect continuous conductivity. The bond wire shall be Size 1/0 copper conductor suitable for direct burial shaped to stand clear of the joint. The bond shall be of the thermal weld type.

2.3.8 Isolation Joints

Isolation joints shall be installed between nonthreaded ferrous and nonferrous metallic pipe, fittings and valves. Isolation joints shall consist of a sandwich-type flange isolation gasket of the dielectric type, isolation washers, and isolation sleeves for flange bolts. Isolation gaskets shall be full faced with outside diameter equal to the flange outside diameter. Bolt isolation sleeves shall be full length. Units shall be of a shape to prevent metal-to-metal contact of dissimilar metallic piping elements.

a. Sleeve-type couplings shall be used for joining plain end pipe sections. The two couplings shall consist of one steel middle ring, two steel followers, two gaskets, and the necessary steel bolts and nuts to compress the gaskets.

b. Split-sleeve type couplings may be used in aboveground installations when approved in special situations and shall consist of gaskets and a housing in two or more sections with the necessary bolts and nuts.

2.3.9 Copper Tubing Jointing

Joints shall be compression-pattern flared and shall be made with the specified fittings.

2.4 VALVES

2.4.1 Check Valves

Check valves shall be designed for a minimum working pressure of 150 psi or as indicated. Valves shall have a clear waterway equal to the full nominal diameter of the valve. Valves shall open to permit flow when inlet pressure is greater than the discharge pressure, and shall close tightly to prevent return flow when discharge pressure exceeds inlet pressure. The size of the valve, working pressure, manufacturer's name, initials, or trademark shall be cast on the body of each valve. Valves 2 inches and larger shall be outside lever and spring type.

a. Valves 2 inches and smaller shall be all bronze designed for screwed fittings, and shall conform to MSS SP-80, Class 150, Types 3 and 4 as suitable for the application.

b. Valves larger than 2 inches shall be iron body, bronze mounted, shall have flanged ends, and shall be the non-slam type. Flanges shall be the Class 125 type conforming to ASME B16.1.

2.4.2 Gate Valves

Gate valves shall be designed for a working pressure of not less than 150 psi. Valve connections shall be as required for the piping in which they are installed. Valves shall have a clear waterway equal to the full nominal diameter of the valve, and shall be opened by turning counterclockwise. The operating nut or wheel shall have an arrow, cast in the metal, indicating the direction of opening.

a. Valves smaller than 3 inches shall be all bronze and shall conform to MSS SP-80, Type 1, Class 150.

b. Valves 3 inches and larger shall be iron body, bronze mounted, and shall conform to AWWA C500. Flanges shall not be buried. An approved pit shall be provided for all flanged connections.

c. Resilient-Seated Gate Valves: For valves 3 to 12 inches in size, resilient-seated gate valves shall conform to AWWA C509.

2.4.3 Omitted

2.4.4 Indicator Post for Valves

Each valve shown on the drawings with the designation "P.I.V." shall be equipped with indicator post conforming to the requirements of NFPA 24. Operation shall be by a wrench which shall be attached to each post.

2.5 VALVE BOXES

Valve boxes shall be cast iron or concrete, except that concrete boxes may be installed only in locations not subjected to vehicular traffic. Cast-iron boxes shall be extension type with slide-type adjustment and with flared base. The minimum thickness of metal shall be 3/16 inch. Concrete boxes shall be the standard product of a manufacturer of precast concrete equipment. The word "WATER" shall be cast in the cover. The box length shall adapt, without full extension, to the depth of cover required over the pipe at the valve location.

2.6 OMITTED

2.7 FIRE HYDRANTS

Hydrants shall be dry-barrel type conforming to AWWA C502 with valve opening at least 5 inches in diameter and designed so that the flange at the main valve seat can be removed with the main valve seat apparatus remaining intact, closed and reasonably tight against leakage and with a breakable valve rod coupling and breakable flange connections located no more than 8 inches above the ground grade. Hydrants shall have a 6 inch bell connection, two 2-1/2 inch hose connections and one 4-1/2 inch pumper connection. Outlets shall have American National Standard fire-hose coupling threads. Working parts shall be bronze. Design, material, and workmanship shall be equal to the latest stock pattern ordinarily produced by the manufacturer. Hydrants shall be painted with 1 coat of red iron oxide, zinc oxide primer conforming to SSPC Paint 25 and 2 finish coats of silicone alkyd paint conforming to SSPC Paint 21, of the installation's standard colors or as directed by the Contracting Officer. Suitable bronze adapter for each outlet, with caps, shall be furnished.

2.8 OMITTED

2.9 MISCELLANEOUS ITEMS

2.9.1 Service Clamps

Service clamps shall have a pressure rating not less than that of the pipe to be connected and shall be either the single or double flattened strap type. Clamps shall have a galvanized malleable-iron body with cadmium plated straps and nuts. Clamps shall have a rubber gasket cemented to the body.

2.9.2 Corporation Stops

Corporation stops shall have standard corporation stop thread conforming to AWWA C800 on the inlet end, with flanged joints, compression pattern flared tube couplings, or wiped joints for connections to goosenecks.

2.9.3 Goosenecks

Copper tubing for gooseneck connections shall conform to the applicable requirements of ASTM B 88, Type K, annealed. Length of cable requirement connections shall be in accordance with standard practice.

2.9.4 Service Stops

Service stops shall be water-works inverted-ground-key type, oval or round flow way, tee handle, without drain. Pipe connections shall be suitable for the type of service pipe used. All parts shall be of bronze with female iron-pipe-size connections or compression-pattern flared tube couplings, and shall be designed for a hydrostatic test pressure not less than 200 psi.

2.9.5 Tapping Sleeves

Tapping sleeves of the sizes indicated for connection to existing main shall be the cast gray, ductile, or malleable iron, split-sleeve type with flanged or grooved outlet, and with bolts, follower rings and gaskets on each end of the sleeve. Construction shall be suitable for a maximum working pressure of 150 psi. Bolts shall have square heads and hexagonal nuts. Longitudinal gaskets and mechanical joints with gaskets shall be as recommended by the manufacturer of the sleeve. When using grooved mechanical tee, it shall consist of an upper housing with full locating collar for rigid positioning which engages a machine-cut hole in pipe, encasing an elastomeric gasket which conforms to the pipe outside diameter around the hole and a lower housing with positioning lugs, secured together during assembly by nuts and bolts as specified, pretorqued to 50 foot-pound.

2.9.6 Omitted

2.9.7 Disinfection

Chlorinating materials shall conform to the following:

Chlorine, Liquid: AWWA B301.

Hypochlorite, Calcium and Sodium: AWWA B300.

2.9.8 Meters

Meters shall be the type and size shown on the drawings or specified. Meters of each of the various types furnished and installed shall be supplied by one manufacturer.

2.9.8.1 Displacement Type

Displacement type meters shall conform to AWWA C700. Registers shall be straight-reading and shall read in U.S. gallons . Meters in sizes 1/2 through 1 inch shall be frost-protection design. Connections shall be suitable to the type of pipe and conditions encountered. Register type shall be a direct reading remote register designed in accordance with

AWWA C706 or an encoder type remote register designed in accordance with AWWA C707. Meters shall comply with the accuracy and capacity requirements of AWWA C700.

2.9.9 Meter Boxes

Meter boxes shall be of cast iron, concrete, or plastic. The boxes shall be of sufficient size to completely enclose the meter and shutoff valve or service stop. Meter boxes set in paved areas subject to vehicular traffic shall be cast iron, or concrete with cast iron lid and cast iron meter reader lid. Boxes set in sidewalks, not subject to vehicular traffic, shall use concrete covers with cast iron meter reader lids. Plastic boxes and lids may be used in unpaved areas or grass areas not subject to vehicular traffic. Box height shall extend from invert of the meter to final grade at the meter location. The lid shall have the word "WATER" cast in it.

PART 3 EXECUTION

3.1 INSTALLATION

3.1.1 Cutting of Pipe

Cutting of pipe shall be done in a neat and workmanlike manner without damage to the pipe. Unless otherwise recommended by the manufacturer and authorized by the Contracting Officer, cutting shall be done with an approved type mechanical cutter. Wheel cutter shall be used when practicable. Copper tubing shall be cut square and all burrs shall be removed. Squeeze type mechanical cutters shall not be used for ductile iron.

3.1.2 Adjacent Facilities

3.1.2.1 Sewer Lines

Where the location of the water pipe is not clearly defined in dimensions on the drawings, the water pipe shall not be laid closer horizontally than 10 feet from a sewer except where the bottom of the water pipe will be at least 12 inches above the top of the sewer pipe, in which case the water pipe shall not be laid closer horizontally than 6 feet from the sewer. Where water lines cross under gravity-flow sewer lines, the sewer pipe, for a distance of at least 10 feet each side of the crossing, shall be fully encased in concrete or shall be made of pressure pipe with no joint located within 3 feet horizontally of the crossing. Water lines shall in all cases cross above sewage force mains or inverted siphons and shall be not less than 2 feet above the sewer main. Joints in the sewer main, closer horizontally than 3 feet to the crossing, shall be encased in concrete.

3.1.2.2 Water Lines

Water lines shall not be laid in the same trench with sewer lines, gas lines, fuel lines, or electric wiring.

3.1.2.3 Copper Tubing Lines

Copper tubing shall not be installed in the same trench with ferrous piping materials.

3.1.2.4 Nonferrous Metallic Pipe

Where nonferrous metallic pipe, e.g. copper tubing, crosses any ferrous piping material, a minimum vertical separation of 12 inchesshall be maintained between pipes.

3.1.2.5 Omitted

3.1.2.6 Structures

Where water pipe is required to be installed within 3 feet of existing structures, the water pipe shall be sleeved in a "Casing Pipe". The Contractor shall install the water pipe and sleeve ensuring that there will be no damage to the structures and no settlement or movement of foundations or footings.

3.1.3 Joint Deflection

3.1.3.1 Allowable for Reinforced Concrete Pipe

Maximum allowable deflections from a straight line or grade, as required by vertical curves, horizontal curves, or offsets, shall be 5 degrees for reinforced concrete pipe unless a lesser amount is recommended by the manufacturer. Long radius curves in reinforced concrete pipe shall be formed by straight pipe in which spigot rings are placed on a bevel. Slight deflections may be made by straight pipe, provided that the maximum joint opening caused by such deflection does not exceed the maximum recommended by the pipe manufacturer. Short radius curves and closures shall be formed by shorter lengths of pipe, bevels, or fabricated specials specified.

3.1.3.2 Offset for Flexible Plastic Pipe

Maximum offset in alignment between adjacent pipe joints shall be as recommended by the manufacturer and approved by the Contracting Officer, but shall not exceed 5 degrees.

3.1.3.3 Allowable for Ductile-Iron Pipe

The maximum allowable deflection shall be as given in AWWA C600. If the alignment requires deflection in excess of the above limitations, special bends or a sufficient number of shorter lengths of pipe shall be furnished to provide angular deflections within the limit set forth.

3.1.3.4 Omitted

3.1.3.5 Allowable for RPMP Pipe

For pipe with bell and spigot rubber gasket joints, maximum allowable deflections from a straight line or grade shall be 4 degrees determined by the diameter, unless a lesser amount is recommended by the manufacturer. Short-radius curves and closures shall be formed by short lengths of pipe or fabricated specials specified.

3.1.4 Placing and Laying

Pipe and accessories shall be carefully lowered into the trench by means of derrick, ropes, belt slings, or other authorized equipment. Water-line materials shall not be dropped or dumped into the trench. Abrasion of the

pipe coating shall be avoided. Except where necessary in making connections with other lines or as authorized by the Contracting Officer, pipe shall be laid with the bells facing in the direction of laying. The full length of each section of pipe shall rest solidly upon the pipe bed, with recesses excavated to accommodate bells, couplings, and joints. Pipe that has the grade or joint disturbed after laying shall be taken up and relaid. Pipe shall not be laid in water or when trench conditions are unsuitable for the work. Water shall be kept out of the trench until joints are complete. When work is not in progress, open ends of pipe, fittings, and valves shall be securely closed so that no trench water, earth, or other substance will enter the pipes or fittings. Where any part of the coating or lining is damaged, the repair shall be made by and at the Contractor's expense in a satisfactory manner. Pipe ends left for future connections shall be valved, plugged, or capped, and anchored, as shown.

3.1.4.1 Omitted

3.1.4.2 Plastic Pipe Installation

RTRP shall be installed in accordance with ASTM D 3839. RPMP shall be installed in accordance with the manufacturer's recommendations. PE Pipe shall be installed in accordance with ASTM D 2774. PVC pipe shall be installed in accordance with AWWA M23.

3.1.4.3 Piping Connections

Where connections are made between new work and existing mains, the connections shall be made by using specials and fittings to suit the actual conditions. When made under pressure, these connections shall be installed using standard methods as approved by the Contracting Officer. Connections to existing asbestos-cement pipe shall be made in accordance with ACPPA 1344.

3.1.4.4 Penetrations

Pipe passing through walls of valve pits and structures shall be provided with ductile-iron or Schedule 40 steel wall sleeves. Annular space between walls and sleeves shall be filled with rich cement mortar. Annular space between pipe and sleeves shall be filled with mastic.

3.1.4.5 Flanged Pipe

Flanged pipe shall only be installed above ground or with the flanges in valve pits.

3.1.5 Jointing

3.1.5.1 Omitted

3.1.5.2 PE Pipe Requirements

Jointing shall comply with ASTM D 2657, Technique I-Socket Fusion or Technique II-Butt Fusion.

3.1.5.3 PVC Plastic Pipe Requirements

a. Pipe less than 4 inch diameter: Threaded joints shall be made by wrapping the male threads with approved thread tape or applying an approved lubricant, then threading the joining members together. The joint shall be tightened using strap wrenches to prevent

damage to the pipe and/or fitting. To avoid excessive torque, joints shall be tightened no more than one thread past hand-tight. Preformed rubber-ring gaskets for elastomeric-gasket joints shall be made in accordance with ASTM F 477 and as specified. Pipe ends for push-on joints shall be beveled to facilitate assembly and marked to indicate when the pipe is fully seated. The gasket shall be prelubricated to prevent displacement. The gasket and ring groove in the bell or coupling shall match. The manufacturer of the pipe or fitting shall supply the elastomeric gasket. Couplings shall be provided with stops or centering rings to assure that the coupling is centered on the joint. Solvent cement joints shall use sockets conforming to ASTM D 2467. The solvent cement used shall meet the requirements of ASTM D 2564; the joint assembly shall be made in accordance with ASTM D 2855 and the manufacturer's specific recommendations.

b. Pipe 4 through 12 inch diameter: Joints shall be elastomeric gasket as specified in AWWA C900. Jointing procedure shall be as specified for pipe less than 4 inch diameter with configuration using elastomeric ring gasket.

c. Pipe 14 through 36 inch diameter: Joints shall be elastomeric gasket push-on joints made in accordance with AWWA M23.

3.1.5.4 RTRP I, RTRP II and RPMP Pipe

a. RTRP I: Assembly of the pipe shall be done in conformance with the manufacturer's written instruction and installation procedures. Field joints shall be prepared as specified by the pipe manufacturer. Several pipe joints having interference-fit type couplings may be field bonded and cured simultaneously. However, the pipe shall not be moved and additional joints shall not be made until the previously laid joints are completely cured. Joints not having interference-fit type coupling shall be fitted with a clamp which shall hold the joint rigidly in place until the joint cement has completely cured. The clamps shall have a protective material on the inner surface to prevent damage to the plastic pipe when the clamp is tightened in place. The pipe manufacturer shall provide a device or method to determine when the joint is pulled against the pipe stop. Additionally, the pipe manufacturer shall furnish a gauge to measure the diameter of the spigot ends to ensure the diameter conforms to the tolerances specified by the manufacturer. All pipe ends shall be gauged. Factory certified tests shall have been satisfactorily performed to verify that short-term rupture strength is 1,500 psior greater when carried out in accordance with ASTM D 1599. At any ambient temperature, field bonded epoxy-cemented joints shall be cured with a self-regulating, thermostatically temperature controlled, electrical heating blanket for the time and temperature recommended by the manufacturer for the applicable size and type of joint, or by an alternate heating method recommended by the manufacturer and approved by the Contracting Officer. The joint sections shall not be moved during heating, or until the joint has cooled to ambient temperature.

b. RTRP II: A reinforced overlay joint shall be used to join sections together through a placement of layers of reinforcement fiberglass roving, mat, tape or fabric thoroughly saturated with compatible catalyzed resin.

c. RPMP: Bell and spigot gasket-sealing coupling shall be used to connect pipes. The spigot shall be lubricated prior to push-together assembly.

d. Fittings and Specials for RTRP and RPMP Pipe: Metal to RTRP and RPMP pipe connections shall be made by bolting steel flanges to RTRP and RPMP pipe flanges. Cast-iron fitting with gasket bell or mechanical joint may be used with RTRP if pipe has cast iron outside diameter. Steel flanges shall be flat-faced type. Where raised-face steel flanges are used, spacer rings shall be used to provide a flat-face seat for RTRP and RPMP pipe flanges. A full-face Buna "N" gasket 1/8 inch thick with a shore hardness of 50-60 shall be used between all flanged connections. The RTRP and RPMP pipe flange shall have raised sealing rings. Flat washers shall be used under all nuts and bolts on RTRP and RPMP pipe flanges. Bolts and nuts shall be of noncorrosive steel and torqued to not more than 100 foot pounds.Flanges shall not be buried. A concrete pit shall be provided for all flanged connections.

3.1.5.5 Ductile-Iron Pipe Requirements

Mechanical and push-on type joints shall be installed in accordance with AWWA C600 for buried lines or AWWA C606 for grooved and shouldered pipe above ground or in pits.

3.1.5.6 Omitted
3.1.5.7 Omitted

3.1.5.8 Copper Tubing Requirements

Joints shall be made with flared fittings. The flared end tube shall be pulled tightly against the tapered part of the fitting by a nut which is part of the fitting, so there is metal-to-metal contact.

3.1.5.9 Bonded Joints Requirements

Bonded joints shall be installed in accordance with details specified for joints in paragraph JOINTS.

3.1.5.10 Isolation Joints and Dielectric Fittings

Isolation joints and dielectric fittings shall be installed in accordance with details specified in paragraph JOINTS. Dielectric unions shall be encapsulated in a field-poured coal-tar covering, with at least 1/8 inch thickness of coal tar over all fitting surfaces.

3.1.5.11 Transition Fittings

Connections between different types of pipe and accessories shall be made with transition fittings approved by the Contracting Officer.

3.1.6 Installation of Service Lines

Service lines shall include the pipeline connecting building piping to water distribution lines to the connections with the building service at a point approximately 5 feet outside the building where such building service exists. Where building services are not installed, the Contractor shall

terminate the service lines approximately 5 feet from the site of the proposed building at a point designated by the Contracting Officer. Such service lines shall be closed with plugs or caps. All service stops and valves shall be provided with service boxes. Service lines shall be constructed in accordance with the following requirements:

3.1.6.1 Service Lines 50 mm (2 Inches) and Smaller

Service lines 2 inches and smaller shall be connected to the main by a directly-tapped corporation stop or by a service clamp. A corporation stop and a copper gooseneck shall be provided with either type of connection. Maximum sizes for directly-tapped corporation stops and for outlets with service clamps shall be as in TABLE I. Where 2 or more gooseneck connections to the main are required for an individual service, such connections shall be made with standard branch connections. The total clear area of the branches shall be at least equal to the clear area of the service which they are to supply.

TABLE I. SIZE OF CORPORATION STOPS AND OUTLET

Pipe Size Inches	Corporation Stops, Inches For Ductile-Iron Pipe	Outlets w/Service Clamps, Inches Single & Double Strap
3	--	1
4	1	1
6	1-1/4	1-1/2
8	1-1/2	2
10	1-1/2	2
12 & larger	2	2

NOTE:

a. Service lines 1-1/2 inches and smaller shall have a service stop.

b. Service lines 2 inches in size shall have a gate valve.

3.1.6.2 Service Lines Larger than 50 mm (2 Inches)

Service lines larger than 2 inches shall be connected to the main by a tapped saddle, tapping sleeve and valve, service clamp or reducing tee, depending on the main diameter and the service line diameter, and shall have a gate valve. Lines 3 inches and larger may use rubber-seated butterfly valves as specified above, or gate valves.

3.1.6.3 Service Lines for Sprinkler Supplies

Water service lines used to supply building sprinkler systems for fire protection shall be connected to the water distribution main in accordance with NFPA 24.

3.1.7 Omitted

3.1.8 Setting of Fire Hydrants, Meters, Valves and Valve Boxes

3.1.8.1 Location of Fire Hydrants

Fire hydrants shall be located and installed as shown. Each hydrant shall be connected to the main with a 6 inch branch line having at least as much cover as the distribution main. Hydrants shall be set plumb with pumper nozzle facing the roadway, with the center of the lowest outlet not less than 18 inches above the finished surrounding grade, and the operating nut not more than 48 inches above the finished surrounding grade. Fire hydrants designated on the drawings as low profile shall have the lowest outlet not less than 18 inches above the finished surrounding grade, the top of the hydrant not more than 24 inches above the finished surrounding grade. Except where approved otherwise, the backfill around hydrants shall be thoroughly compacted to the finished grade immediately after installation to obtain beneficial use of the hydrant as soon as practicable. The hydrant shall be set upon a slab of concrete not less than 4 inches thick and 15 inchessquare. Not less than 7 cubic feet of free-draining broken stone or gravel shall be placed around and beneath the waste opening of dry barrel hydrants to ensure drainage.

3.1.8.2 Location of Meters

Meters and meter boxes shall be installed at the locations shown on the drawings. The meters shall be centered in the boxes to allow for reading and ease of removal or maintenance.

3.1.8.3 Location of Valves

After delivery, valves, including those in hydrants, shall be drained to prevent freezing and shall have the interiors cleaned of all foreign matter before installation. Stuffing boxes shall be tightened and hydrants and valves shall be fully opened and fully closed to ensure that all parts are in working condition. Check, pressure reducing, vacuum, and air relief valves shall be installed in valve pits. Valves and valve boxes shall be installed where shown or specified, and shall be set plumb. Valve boxes shall be centered on the valves. Boxes shall be installed over each outside gate valve unless otherwise shown. Where feasible, valves shall be located outside the area of roads and streets. Earth fill shall be tamped around each valve box or pit to a distance of 4 feet on all sides of the box, or the undisturbed trench face if less than 4 feet.

3.1.9 Tapped Tees and Crosses

Tapped tees and crosses for future connections shall be installed where shown.

3.1.10 Thrust Restraint

Plugs, caps, tees and bends deflecting 11.25 degrees or more, either vertically or horizontally, on waterlines 4 inches in diameter or larger, and fire hydrants shall be provided with thrust restraints. Valves shall be securely anchored or shall be provided with thrust restraints to prevent movement. Thrust restraints shall be either thrust blocks or, for ductile-iron pipes, restrained joints.

3.1.10.1 Thrust Blocks

Thrust blocking shall be concrete of a mix not leaner than: 1 cement, 2-1/2 sand, 5 gravel; and having a compressive strength of not less than 2,000 psi after 28 days. Blocking shall be placed between solid ground and the hydrant or fitting to be anchored. Unless otherwise indicated or directed, the base and thrust bearing sides of thrust blocks shall be poured directly against undisturbed earth. The sides of thrust blocks not subject to thrust may be poured against forms. The area of bearing shall be as shown or as directed. Blocking shall be placed so that the fitting joints will be accessible for repair. Steel rods and clamps, protected by galvanizing or by coating with bituminous paint, shall be used to anchor vertical down bends into gravity thrust blocks.

3.1.10.2 Restrained Joints

For ductile-iron pipe, restrained joints shall be designed by the Contractor or the pipe manufacturer in accordance with DIPRA TRD.

3.2 HYDROSTATIC TESTS

Where any section of a water line is provided with concrete thrust blocking for fittings or hydrants, the hydrostatic tests shall not be made until at least 5 days after installation of the concrete thrust blocking, unless otherwise approved.

3.2.1 Pressure Test

After the pipe is laid, the joints completed, fire hydrants permanently installed, and the trench partially backfilled leaving the joints exposed for examination, the newly laid piping or any valved section of piping shall, unless otherwise specified, be subjected for 1 hour to a hydrostatic pressure test of 200 psi. Water supply lines designated on the drawings shall be subjected for 1 hour to a hydrostatic pressure test of 200 psi. Each valve shall be opened and closed several times during the test. Exposed pipe, joints, fittings, hydrants, and valves shall be carefully examined during the partially open trench test. Joints showing visible leakage shall be replaced or remade as necessary. Cracked or defective pipe, joints, fittings, hydrants and valves discovered in consequence of this pressure test shall be removed and replaced with sound material, and the test shall be repeated until the test results are satisfactory. The requirement for the joints to remain exposed for the hydrostatic tests may be waived by the Contracting Officer when one or more of the following conditions is encountered:

a. Wet or unstable soil conditions in the trench.

b. Compliance would require maintaining barricades and walkways around and across an open trench in a heavily used area that would require continuous surveillance to assure safe conditions.

c. Maintaining the trench in an open condition would delay completion of the project.

The Contractor may request a waiver, setting forth in writing the reasons for the request and stating the alternative procedure proposed to comply with the required hydrostatic tests. Backfill placed prior to the tests shall be placed in accordance with the requirements of Section 02316A EXCAVATION, TRENCHING, AND BACKFILLING FOR UTILITIES SYSTEMS.

3.2.2 Leakage Test

Leakage test shall be conducted after the pressure tests have been satisfactorily completed. The duration of each leakage test shall be at least 2 hours, and during the test the water line shall be subjected to not less than 200 psi pressure. Water supply lines designated on the drawings shall be subjected to a pressure equal to 200 psi. Leakage is defined as the quantity of water to be supplied into the newly laid pipe, or any valved or approved section, necessary to maintain pressure within 5 psi of the specified leakage test pressure after the pipe has been filled with water and the air expelled. Piping installation will not be accepted if leakage exceeds the allowable leakage which is determined by the following formula:

L = 0.0001351ND(P raised to 0.5 power)

L = Allowable leakage in gallons per hour
N = Number of joints in the length of pipeline tested
D = Nominal diameter of the pipe in inches
P = Average test pressure during the leakage test, in psi gauge

Should any test of pipe disclose leakage greater than that calculated by the above formula, the defective joints shall be located and repaired until the leakage is within the specified allowance, without additional cost to the Government.

3.2.3 Time for Making Test

Except for joint material setting or where concrete thrust blocks necessitate a 5-day delay, pipelines jointed with rubber gaskets, mechanical or push-on joints, or couplings may be subjected to hydrostatic pressure, inspected, and tested for leakage at any time after partial completion of backfill. Cement-mortar lined pipe may be filled with water as recommended by the manufacturer before being subjected to the pressure test and subsequent leakage test.

3.2.4 Concurrent Hydrostatic Tests

The Contractor may elect to conduct the hydrostatic tests using either or both of the following procedures. Regardless of the sequence of tests employed, the results of pressure tests, leakage tests, and disinfection shall be as specified. Replacement, repair or retesting required shall be accomplished by the Contractor at no additional cost to the Government.

a. Pressure test and leakage test may be conducted concurrently.

b. Hydrostatic tests and disinfection may be conducted concurrently, using the water treated for disinfection to accomplish the hydrostatic tests. If water is lost when treated for disinfection and air is admitted to the unit being tested, or if any repair procedure results in contamination of the unit, disinfection shall be reaccomplished.

3.3 BACTERIAL DISINFECTION

3.3.1 Bacteriological Disinfection

Before acceptance of potable water operation, each unit of completed

waterline shall be disinfected as specified. After pressure tests have been made, the unit to be disinfected shall be thoroughly flushed with water until all entrained dirt and mud have been removed before introducing the chlorinating material. The chlorinating material shall be either liquid chlorine, calcium hypochlorite, or sodium hypochlorite, conforming to paragraph MISCELLANEOUS ITEMS. The chlorinating material shall provide a dosage of not less than 50 ppm and shall be introduced into the water lines in an approved manner. Polyvinyl Chloride (PVC) pipe lines shall be chlorinated using only the above specified chlorinating material in solution. The agent shall not be introduced into the line in a dry solid state. The treated water shall be retained in the pipe long enough to destroy all non-spore forming bacteria. Except where a shorter period is approved, the retention time shall be at least 24 hours and shall produce not less than 25 ppm of free chlorine residual throughout the line at the end of the retention period. Valves on the lines being disinfected shall be opened and closed several times during the contact period. The line shall then be flushed with clean water until the residual chlorine is reduced to less than 1.0 ppm. During the flushing period, each fire hydrant on the line shall be opened and closed several times. From several points in the unit, personnel from the Contractor's commercial laboratory shall take at least 3 water samples from different points, approved by the Contracting Officer, in proper sterilized containers and perform a bacterial examination in accordance with state approved methods. The commercial laboratory shall be certified by the state's approving authority for examination of potable water. The disinfection shall be repeated until tests indicate the absence of pollution for at least 2 full days. The unit will not be accepted until satisfactory bacteriological results have been obtained.

3.4 CLEANUP

Upon completion of the installation of water lines, and appurtenances, all debris and surplus materials resulting from the work shall be removed.

-- End of Section --

SECTION TABLE OF CONTENTS

DIVISION 02 - SITE CONSTRUCTION

SECTION 02531

SANITARY SEWERS

07/02

PART 1 GENERAL

1.1 REFERENCES
1.2 SYSTEM DESCRIPTION
1.2.1 Sanitary Sewer Gravity Pipeline
1.3 OMITTED
1.4 SUBMITTALS
1.5 DELIVERY, STORAGE, AND HANDLING
1.5.1 Delivery and Storage
1.5.1.1 Piping
1.5.1.2 Metal Items
1.5.1.3 Cement, Aggregate, and Reinforcement
1.5.2 Handling

PART 2 PRODUCTS

2.1 PIPELINE MATERIALS
2.1.1 Omitted
2.1.2 Omitted
2.1.3 Concrete Gravity Sewer Piping
2.1.3.1 Concrete Gravity Pipe and Fittings
2.1.3.2 Jointing Materials for Concrete Gravity Piping
2.1.4 Omitted
2.1.5 Ductile Iron Gravity Sewer Pipe and Associated Fittings
2.1.5.1 Ductile Iron Gravity Pipe and Fittings
2.1.5.2 Ductile Iron Gravity Joints and Jointing Materials
2.1.6 Omitted
2.1.7 ABS Composite Plastic Piping
2.1.7.1 ABS Composite Plastic Pipe and Fittings
2.1.7.2 Jointing Materials for ABS Composite Plastic Piping
2.1.8 ABS Solid-Wall Plastic Piping
2.1.8.1 ABS Solid-Wall Plastic Pipe and Fittings
2.1.8.2 ABS Solid-Wall Plastic Joints and Jointing Materials
2.1.9 PVC Plastic Gravity Sewer Piping
2.1.9.1 PVC Plastic Gravity Pipe and Fittings
2.1.9.2 PVC Plastic Gravity Joints and Jointing Material
2.1.10 Omitted
2.1.11 High Density Polyethylene Pipe
2.1.12 Reinforced Plastic Mortar Pipe (RPMP)
2.1.13 Reinforced Thermosetting Resin Pipe (RTRP)
2.1.13.1 Filament Wound RTRP-I
2.1.13.2 Centrifugally Cast RTRP-II
2.2 CONCRETE MATERIALS
2.2.1 Cement Mortar
2.2.2 Portland Cement
2.2.3 Portland Cement Concrete
2.3 MISCELLANEOUS MATERIALS
2.3.1 Precast Concrete Manholes and Glass-Fiber-Reinforced Polyester

Manholes.
2.3.2 Gaskets and Connectors
2.3.3 External Preformed Rubber Joint Seals
2.3.4 Metal Items
2.3.4.1 Frames, Covers, and Gratings for Manholes
2.3.4.2 Manhole Steps
2.3.4.3 Manhole Ladders

PART 3 EXECUTION

3.1 INSTALLATION OF PIPELINES AND APPURTENANT CONSTRUCTION
3.1.1 General Requirements for Installation of Pipelines
3.1.1.1 Location
3.1.1.2 Earthwork
3.1.1.3 Pipe Laying and Jointing
3.1.1.4 Connections to Existing Lines
3.1.2 Special Requirements
3.1.2.1 Omitted
3.1.2.2 Omitted
3.1.2.3 Omitted
3.1.2.4 Installation of Concrete Pressure Lines
3.1.2.5 Installation of Ductile Iron Gravity Sewer Pipe
3.1.2.6 Omitted
3.1.2.7 Installation of ABS Composite Plastic Piping
3.1.2.8 Installation of ABS Solid-Wall Plastic Piping
3.1.2.9 Installation of PVC Plastic Piping
3.1.3 Concrete Work
3.1.4 Manhole Construction
3.1.5 Miscellaneous Construction and Installation
3.1.5.1 Connecting to Existing Manholes
3.1.5.2 Metal Work
3.1.6 Omitted
3.1.7 Installations of Wye Branches
3.2 FIELD QUALITY CONTROL
3.2.1 Field Tests and Inspections
3.2.2 Tests for Nonpressure Lines
3.2.2.1 Leakage Tests

-- End of Section Table of Contents --

UFGS-02531 (July 2002)

SECTION 02531

SANITARY SEWERS
07/02

PART 1 GENERAL

1.1 REFERENCES

The publications listed below form a part of this specification to the extent referenced. The publications are referred to in the text by the basic designation only.

AMERICAN SOCIETY FOR TESTING AND MATERIALS (ASTM)

ASTM A 123/A 123M	(2001a) Zinc (Hot-Dip Galvanized) Coatings on Iron and Steel Products
ASTM A 746	(1999) Ductile Iron Gravity Sewer Pipe
ASTM C 14	(1999) Concrete Sewer, Storm Drain, and Culvert Pipe
ASTM C 150	(2002) Portland Cement
ASTM C 270	(2001a) Mortar for Unit Masonry
ASTM C 33	(2001a) Concrete Aggregates
ASTM C 443	(2001) Joints for Circular Concrete Sewer and Culvert Pipe, Using Rubber Gaskets
ASTM C 478	(1997) Precast Reinforced Concrete Manhole Sections
ASTM C 478M	(1997) Precast Reinforced Concrete Manhole Sections (Metric)
ASTM C 923	(2000) Resilient Connectors Between Reinforced Concrete Manhole Structures, Pipes and Laterals
ASTM C 924	(1989; R 1997) Testing Concrete Pipe Sewer Lines by Low-Pressure Air Test Method
ASTM C 94	(1994) Ready-Mixed Concrete **
ASTM C 94/C 94M	(2000e2) Ready-Mixed Concrete
ASTM C 969	(2000) Infiltration and Exfiltration Acceptance Testing of Installed Precast Concrete Pipe Sewer Lines
ASTM C 972	(2000) Compression-Recovery of Tape Sealant

ASTM C 990	(2001a) Joints for Concrete Pipe, Manholes, and Precast Box Sections Using Preformed Flexible Joint Sealers
ASTM D 2235	(2001) Solvent Cement for Acrylonitrile-Butadiene-Styrene (ABS) Plastic Pipe and Fittings
ASTM D 2321	(2000) Underground Installation of Thermoplastic Pipe for Sewers and Other Gravity-Flow Applications
ASTM D 2680	(2001) Acrylonitrile-Butadiene-Styrene (ABS) and Poly(Vinyl Chloride) (PVC) Composite Sewer Piping
ASTM D 2751	(1996a) Acrylonitrile-Butadiene-Styrene (ABS) Sewer Pipe and Fittings
ASTM D 2996	(2001) Filament-Wound "Fiberglass" (Glass-Fiber-Reinforced Thermosetting-Resin) Pipe
ASTM D 2997	(2001) Centrifugally Cast "Fiberglass" (Glass-Fiber-Reinforced Thermosetting-Resin) Pipe
ASTM D 3034	(2000) Type PSM Poly(Vinyl Chloride) (PVC) Sewer Pipe and Fittings
ASTM D 3212	(1996a) Joints for Drain and Sewer Plastic Pipes Using Flexible Elastomeric Seals
ASTM D 3262	(2002) "Fiberglass" (Glass-Fiber-Reinforced Thermosetting-Resin) Sewer Pipe
ASTM D 3350	(2002) Polyethylene Plastics Pipe and Fittings Materials
ASTM D 3753	(1999)Glass-Fiber-Reinforced Manholes
ASTM D 3840	(2001) "Fiberglass" (Glass-Fiber-Reinforced Thermosetting-Resin) Pipe Fittings for Nonpressure Applications
ASTM D 4101	(2002) Propylene Injection and Extrusion Materials
ASTM D 412	(1998a) Vulcanized Rubber and Thermoplastic Rubbers and Thermoplastic Elastomers - Tension
ASTM D 4161	(2001) "Fiberglass" (Glass-Fiber-Reinforced Thermosetting-Resin) Pipe Joints Using Flexible Elastomeric Seals

ASTM D 624	(2000) Tear Strength of Conventional Vulcanized Rubber and Thermoplastic Elastomers
ASTM F 402	(1993; R 1999) Safe Handling of Solvent Cements, Primers, and Cleaners Used for Joining Thermoplastic Pipe and Fittings
ASTM F 477	(1999) Elastomeric Seals (Gaskets) for Joining Plastic Pipe
ASTM F 714	(2001) Polyethylene (PE) Plastic Pipe (SDR-PR) Based on Outside Diameter
ASTM F 794	(1999) Poly(Vinyl Chloride) (PVC) Profile Gravity Sewer Pipe and Fittings Based on Controlled Inside Diameter
ASTM F 894	(1998a) Polyethylene (PE) Large Diameter Profile Wall Sewer and Drain Pipe
ASTM F 949	(2001a) Poly(Vinyl Chloride) (PVC) Corrugated Sewer Pipe with a Smooth Interior and Fittings

AMERICAN WATER WORKS ASSOCIATION(AWWA)

AWWA C104	(1995) Cement-Mortar Lining for Ductile-Iron Pipe and Fittings for Water
AWWA C110	(1998) Ductile-Iron and Gray-Iron Fittings, 3 In. Through 48 In. (76 mm through 1219 mm), for Water
AWWA C111	(2000) Rubber-Gasket Joints for Ductile-Iron Pressure Pipe and Fittings
AWWA C153	(2000) Ductile-Iron Compact Fittings for Water Service
AWWA C600	(1999) Installation of Ductile-Iron Water Mains and Their Appurtenances
AWWA M9	(1995) Manual: Concrete Pressure Pipe

U.S. GENERAL SERVICES ADMINISTRATION (GSA)

FS A-A-60005	(1998) Frames, Covers, Gratings, Steps, Sump and Catch Basin, Manhole ++

U.S. NATIONAL ARCHIVES AND RECORDS ADMINISTRATION (NARA)

29 CFR 1910.27	Fixed Ladders

UNI-BELL PVC PIPE ASSOCIATION (UBPPA)

UBPPA UNI-B-6	(1990) Recommended Practice for the Low-Pressure Air Testing of Installed Sewer Pipe

1.2 SYSTEM DESCRIPTION

1.2.1 Sanitary Sewer Gravity Pipeline

Provide building connections, mains and laterals of concrete pipe, ductile-iron pipe, acrylonitrile-butadiene-styrene (ABS) composite plastic pipe or polyvinyl chloride (PVC) plastic pipe, at the Contractor's option.

Provide new and modify existing exterior sanitary gravity sewer piping and appurtenances. Provide each system complete and ready for operation. The exterior sanitary gravity sewer system includes equipment, materials, installation, and workmanship as specified herein more than 5 feet outside of building walls.

1.3 OMITTED

1.4 SUBMITTALS

Government approval is required for submittals with a "G" designation; submittals not having a "G" designation are for information only or as otherwise designated. When used, a designation following the "G" designation identifies the office that will review the submittal for the Government. The following shall be submitted in accordance with Section 01330 SUBMITTAL PROCEDURES:

SD-02 Shop Drawings

Precast concrete manholes

Metal items

Frames, covers, and gratings

SD-03 Product Data

Pipeline materials including joints, fittings, and couplings

Submit manufacturer's standard drawings or catalog cuts.

1.5 DELIVERY, STORAGE, AND HANDLING

1.5.1 Delivery and Storage

1.5.1.1 Piping

Inspect materials delivered to site for damage; store with minimum of handling. Store materials on site in enclosures or under protective coverings. Store plastic piping and jointing materials and rubber gaskets under cover out of direct sunlight. Do not store materials directly on the ground. Keep inside of pipes and fittings free of dirt and debris.

1.5.1.2 Metal Items

Check upon arrival; identify and segregate as to types, functions, and sizes. Store off the ground in a manner affording easy accessibility and not causing excessive rusting or coating with grease or other objectionable materials.

1.5.1.3 Cement, Aggregate, and Reinforcement

As specified in Section 03300 CAST-IN-PLACE STRUCTURAL CONCRETE.

1.5.2 Handling

Handle pipe, fittings, and other accessories in such manner as to ensure delivery to the trench in sound undamaged condition. Take special care not to damage linings of pipe and fittings; if lining is damaged, make satisfactory repairs. Carry, do not drag, pipe to trench.

PART 2 PRODUCTS

2.1 PIPELINE MATERIALS

Pipe shall conform to the respective specifications and other requirements specified below.

2.1.1 Omitted
2.1.2 Omitted

2.1.3 Concrete Gravity Sewer Piping

2.1.3.1 Concrete Gravity Pipe and Fittings

Pipe shall be nonreinforced concrete pipe conforming to ASTM C 14, Class 3. Circular pipe with elliptical reinforcement shall have a readily visible line at least 12 inches long painted or otherwise applied on the inside and outside of the pipe at each end so that when the pipe is laid in the proper position, the line will be at the center of the top of the pipe. Fittings and specials shall conform to the applicable requirements specified for the pipe and shall be of the same strength as the pipe.

2.1.3.2 Jointing Materials for Concrete Gravity Piping

Gaskets and pipe ends for rubber gasket joint shall conform to ASTM C 443. Gaskets shall be suitable for use with sewage.

2.1.4 Omitted

2.1.5 Ductile Iron Gravity Sewer Pipe and Associated Fittings

2.1.5.1 Ductile Iron Gravity Pipe and Fittings

Ductile iron pipe shall conform to ASTM A 746, Thickness Class 3. Fittings shall conform to AWWA C110 or AWWA C153. Fittings with push-on joint ends shall conform to the same requirements as fittings with mechanical-joint ends, except that the bell design shall be modified, as approved by the Contracting Officer, for push-on joint. Fittings shall have strength at least equivalent to that of the pipe. Ends of pipe and fittings shall be suitable for the joints specified hereinafter. Pipe and fittings shall have cement-mortar lining conforming to AWWA C104, standard thickness.

2.1.5.2 Ductile Iron Gravity Joints and Jointing Materials

Pipe and fittings shall have push-on joints or mechanical joints, except as otherwise specified in this paragraph. Push-on joint pipe ends and fitting ends, gaskets, and lubricant for joint assembly shall conform to AWWA C111. Mechanical joint requirements for pipe ends, glands, bolts and nuts, and

gaskets shall conform to AWWA C111.

2.1.6 Omitted

2.1.7 ABS Composite Plastic Piping

2.1.7.1 ABS Composite Plastic Pipe and Fittings

ASTM D 2680.

2.1.7.2 Jointing Materials for ABS Composite Plastic Piping

Solvent cement and primer shall conform to ASTM D 2680.

2.1.8 ABS Solid-Wall Plastic Piping

2.1.8.1 ABS Solid-Wall Plastic Pipe and Fittings

ASTM D 2751, SDR 35, with ends suitable for either solvent cement joints or elastomer joints.

2.1.8.2 ABS Solid-Wall Plastic Joints and Jointing Materials

Solvent cement for solvent cement joints shall conform to ASTM D 2235. Elastomeric joints shall conform to ASTM D 3212. Gaskets for elastomeric joints shall conform to ASTM F 477.

2.1.9 PVC Plastic Gravity Sewer Piping

2.1.9.1 PVC Plastic Gravity Pipe and Fittings

ASTM D 3034, SDR 35, or ASTM F 949 with ends suitable for elastomeric gasket joints. ASTM F 794, Series 46, for ribbed sewer pipe with smooth interior, size 8 inch through 48 inch diameters.

2.1.9.2 PVC Plastic Gravity Joints and Jointing Material

Joints shall conform to ASTM D 3212. Gaskets shall conform to ASTM F 477.

2.1.10 Omitted

2.1.11 High Density Polyethylene Pipe

ASTM F 894, Class 63, size 18 inch through 120 inch. ASTM F 714, size 4 inch through 48 inch. The polyethylene shall be certified by the resin producer as meeting the requirements of ASTM D 3350, cell Class 334433C. The pipe stiffness shall be greater than or equal to 1170/D for cohesionless material pipe trench backfills. Fittings for High Density Polyethylene Pipe: ASTM F 894. Joints for high density polyethylene pipe: Rubber gasket joints shall conform to ASTM C 443.

2.1.12 Reinforced Plastic Mortar Pipe (RPMP)

Reinforced plastic mortar pipe shall be produced by centrifugal casting and shall have an outside diameter equal to ductile iron pipe dimensions from 18 inch to 48 inch. The inner surface of the pipe shall have a smooth uniform continuous resin-rich surface liner. The minimum pipe stiffness shall be 36 psi. RPMP shall be in accordance with ASTM D 3262. Fittings for RPMP: ASTM D 3840. Joints for RPMP: Bell and spigot gasket coupling

utilizing an elastomeric gasket in accordance with ASTM D 4161 and ASTM F 477.

2.1.13 Reinforced Thermosetting Resin Pipe (RTRP)

RTRP pipe: ASTM D 3262. Fittings for RTRP: ASTM D 3262. Joints for RTRP: Bell and spigot type utilizing an elastomeric gasket in accordance with ASTM F 477.

2.1.13.1 Filament Wound RTRP-I

RTRP-I shall conform to ASTM D 2996, except pipe shall have an outside diameter equal to cast iron outside diameter or standard weight steel pipe. The pipe shall be suitable for a normal working pressure of 150 psi at 73 degrees F.The inner surface of the pipe shall have a smooth uniform continuous resin-rich surface liner conforming to ASTM D 2996.

2.1.13.2 Centrifugally Cast RTRP-II

RTRP-II shall conform to ASTM D 2997. Pipe shall have an outside diameter equal to standard weight steel pipe.

2.2 CONCRETE MATERIALS

2.2.1 Cement Mortar

Cement mortar shall conform to ASTM C 270, Type M with Type II cement.

2.2.2 Portland Cement

Portland cement shall conform to ASTM C 150, Type II for concrete used in concrete pipe, concrete pipe fittings, and manholes and type optional with the Contractor for cement used in concrete cradle, concrete encasement, and thrust blocking. Where aggregates are alkali reactive, as determined by Appendix XI of ASTM C 33, a cement containing less than 0.60 percent alkalies shall be used.

2.2.3 Portland Cement Concrete

Portland cement concrete shall conform to ASTM C 94/C 94M, compressive strength of 4000 psi at 28 days, except for concrete cradle and encasement or concrete blocks for manholes. Concrete used for cradle and encasement shall have a compressive strength of 2500 psiminimum at 28 days. Concrete in place shall be protected from freezing and moisture loss for 7 days. Text

2.3 MISCELLANEOUS MATERIALS

2.3.1 Precast Concrete Manholes and Glass-Fiber-Reinforced Polyester Manholes.

Precast concrete manhole risers, base sections, and tops shall conform to ASTM C 478; base and first riser shall be monolithic.
Glass-Fiber-Reinforced Polyester Manholes shall conform to ASTM D 3753.

2.3.2 Gaskets and Connectors

Gaskets for joints between manhole sections shall conform to ASTM C 443.

Resilient connectors for making joints between manhole and pipes entering manhole shall conform to ASTM C 923 or ASTM C 990.

2.3.3 External Preformed Rubber Joint Seals

An external preformed rubber joint seal shall be an accepted method of sealing cast iron covers to precast concrete sections to prevent ground water infiltration into sewer systems. All finished and sealed manholes constructed in accordance with paragraph entitled "Manhole Construction" shall be tested for leakage in the same manner as pipelines as described in paragraph entitled "Leakage Tests." The seal shall be multi-section with a neoprene rubber top section and all lower sections made of Ethylene Propylene Di Monomer (EPDM) rubber with a minimum thickness of 60 mils. Each unit shall consist of a top and bottom section and shall have mastic on the bottom of the bottom section and mastic on the top and bottom of the top section. The mastic shall be a non-hardening butyl rubber sealant and shall seal to the cone/top slab of the manhole/catch basin and over the lip of the casting. Extension sections shall cover up to two more adjusting rings. Properties and valves are listed in the following tables:

Properties, Test Methods and Minimum Values for Rubber used in Preformed Joint Seals

Physical Properties	Test Methods	EPDM	Neoprene	Butyl mastic
Tensile, psi	ASTM D 412	1840	2195	-
Elogation percent	ASTM D 412	553	295	350
Tear Resistance, ppi	ASTM D 624 (Die B)	280	160	-
Rebound, percent, 5 minutes	ASTM C 972 (mod.)	-	-	11
Rebound, percent, 2 hours	ASTM C 972	-	-	12

2.3.4 Metal Items

2.3.4.1 Frames, Covers, and Gratings for Manholes

FS A-A-60005, cast iron; figure numbers shall be as follows:

a. Traffic manhole: Provide in paved areas.

Frame: Figure 1, Size 22A
Cover: Figure 8, Size 22A
Steps: Figure 19

b. Non-traffic manhole:

Frame: Figure 4, Size 22
Cover: Figure 12, Size 22
Steps: Figure 19

Frames and covers shall be cast iron, ductile iron or reinforced concrete. Cast iron frames and covers shall be as indicated or shall be of type

suitable for the application, circular, without vent holes. The frames and covers shall have a combined weight of not less than 400 pounds. Reinforced concrete frames and covers shall be as indicated or shall conform to ASTM C 478 or ASTM C 478M. The word "Sewer" shall be stamped or cast into covers so that it is plainly visible.

2.3.4.2 Manhole Steps

Zinc-coated steel conforming to 29 CFR 1910.27. As an option, plastic or rubber coating pressure-molded to the steel may be used. Plastic coating shall conform to ASTM D 4101, copolymer polypropylene. Rubber shall conform to ASTM C 443, except shore A durometer hardness shall be 70 plus or minus 5. Aluminum steps or rungs will not be permitted. Steps are not required in manholes less than 4 feet deep.

2.3.4.3 Manhole Ladders

A steel ladder shall be provided where the depth of a manhole exceeds 12 feet. The ladder shall not be less than 16 inches in width, with 3/4 inch diameter rungs spaced 12 inches apart. The two stringers shall be a minimum 3/8 inch thick and 2 inches wide. Ladders and inserts shall be galvanized after fabrication in conformance with ASTM A 123/A 123M.

PART 3 EXECUTION

3.1 INSTALLATION OF PIPELINES AND APPURTENANT CONSTRUCTION

3.1.1 General Requirements for Installation of Pipelines

Apply except where specific exception is made in the following paragraphs entitled "Special Requirements."

3.1.1.1 Location

The work covered by this section shall terminate at a point approximately 5 feet from the building. Where the location of the sewer is not clearly defined by dimensions on the drawings, do not lay sewer line closer horizontally than 10 feet to a water main or service line. Where sanitary sewer lines pass above water lines, encase sewer in concrete for a distance of 10 feet on each side of the crossing, or substitute rubber-gasketed pressure pipe for the pipe being used for the same distance. Where sanitary sewer lines pass below water lines, lay pipe so that no joint in the sewer line will be closer than 3 feet, horizontal distance, to the water line.

3.1.1.2 Earthwork

Perform earthwork operations in accordance with Section 02316A, "EXCAVATION, TRENCHING AND BACKFILLING FOR UTILITIES SYSTEMS."

3.1.1.3 Pipe Laying and Jointing

Inspect each pipe and fitting before and after installation; replace those found defective and remove from site. Provide proper facilities for lowering sections of pipe into trenches. Lay nonpressure pipe with the bell ends in the upgrade direction. Adjust spigots in bells to give a uniform space all around. Blocking or wedging between bells and spigots will not be permitted. Replace by one of the proper dimensions, pipe or fittings that do not allow sufficient space for installation of joint

material. At the end of each work day, close open ends of pipe temporarily with wood blocks or bulkheads. Provide batterboards not more than 25 feet apart in trenches for checking and ensuring that pipe invert elevations are as indicated. Laser beam method may be used in lieu of batterboards for the same purpose.

Branch connections shall be made by use of regular fittings or solvent cemented saddles as approved. Saddles for ABS and PVC composite pipe shall conform to Figure 2 of ASTM D 2680; saddles for ABS pipe shall comply with Table 3 of ASTM D 2751; and saddles for PVC pipe shall conform to Table 4 of ASTM D 3034.

3.1.1.4 Connections to Existing Lines

Obtain approval from the Contracting Officer before making connection to existing line. Conduct work so that there is minimum interruption of service on existing line.

3.1.2 Special Requirements

3.1.2.1 Omitted
3.1.2.2 Omitted
3.1.2.3 Omitted

3.1.2.4 Installation of Concrete Pressure Lines

Unless otherwise specified, install pipe and fittings in accordance with paragraph entitled "General Requirements for Installation of Pipelines" of this section and with the laying and joining requirements specified in the guide specifications for installation of pipe given in AWWA M9, Chapter 14, "Guide Specifications for Installation of Pipe."

a. Joints: Make joints with the gaskets specified for concrete pressure pipe joints, using an approved lubricant recommended by the pipe manufacturer. Assemble these joints in accordance with the joining requirements specified in the guide specifications for installation of pipe given in AWWA M9, Chapter 14, "Guide Specifications for Installation of Pipe," and with the recommendations given for laying the pipe in AWWA M9, Chapter 6, "Installation by Trenching or Tunneling -- Methods and Equipment."

b. Pipe anchorage: Provide concrete thrust blocks (reaction backing) for pipe anchorage. Size and position thrust blocks as indicated. Use concrete conforming to ASTM C 94 having a minimum compressive strength of 2,000 psi at 28 days; or use concrete of a mix not leaner than one part cement 2 1/2 parts sand, and 5 parts gravel, having the same minimum compressive strength.

3.1.2.5 Installation of Ductile Iron Gravity Sewer Pipe

Unless otherwise specified, install pipe and associated fittings in accordance with paragraph entitled "General Requirements for Installation of Pipelines" of this section and with the requirements of AWWA C600 for pipe installation and joint assembly.

a. Make push-on joints with the gaskets and lubricant specified for this type joint and assemble in accordance with the applicable requirements of AWWA C600 for joint assembly. Make mechanical-joints with the gaskets, glands, bolts, and nuts

specified for this type joint and assemble in accordance with the applicable requirements of AWWA C600 for joint assembly and the recommendations of Appendix A to AWWA C111.

3.1.2.6 Omitted

3.1.2.7 Installation of ABS Composite Plastic Piping

Install pipe and fittings in accordance with paragraph entitled "General Requirements for Installation of Pipelines" of this section and with the recommendations of the plastic pipe manufacturer. Make joints with the primer and solvent cement specified for this joint and assemble in accordance with the recommendations of the pipe manufacturer. Handle solvent cement in accordance with ASTM F 402.

3.1.2.8 Installation of ABS Solid-Wall Plastic Piping

Install pipe and fittings in accordance with paragraph entitled "General Requirements for Installation of Pipelines" of this section and with the recommendations of the plastic pipe manufacturer. Make solvent cement joints with the solvent cement previously specified for this type joint. Make elastomeric joints with the gaskets specified for this type joint and assemble in accordance with the recommendations of the pipe manufacturer. Handle solvent cement in accordance with ASTM F 402.

3.1.2.9 Installation of PVC Plastic Piping

Install pipe and fittings in accordance with paragraph entitled "General Requirements for Installation of Pipelines" of this section and with the requirements of ASTM D 2321 for laying and joining pipe and fittings. Make joints with the gaskets specified for joints with this piping and assemble in accordance with the requirements of ASTM D 2321 for assembly of joints. Make joints to other pipe materials in accordance with the recommendations of the plastic pipe manufacturer.

3.1.3 Concrete Work

Cast-in-place concrete is included in Section 03300 CAST-IN-PLACE STRUCTURAL CONCRETE.

The pipe shall be supported on a concrete cradle, or encased in concrete where indicated or directed.

3.1.4 Manhole Construction

Construct base slab of cast-in-place concrete or use precast concrete base sections. Make inverts in cast-in-place concrete and precast concrete bases with a smooth-surfaced semi-circular bottom conforming to the inside contour of the adjacent sewer sections. For changes in direction of the sewer and entering branches into the manhole, make a circular curve in the manhole invert of as large a radius as manhole size will permit. For cast-in-place concrete construction, either pour bottom slabs and walls integrally or key and bond walls to bottom slab. No parging will be permitted on interior manhole walls. For precast concrete construction, make joints between manhole sections with the gaskets specified for this purpose; install in the manner specified for installing joints in concrete piping. Parging will not be required for precast concrete manholes. Cast-in-place concrete work shall be in accordance with the requirements specified under paragraph entitled "Concrete Work" of this section. Make

joints between concrete manholes and pipes entering manholes with the resilient connectors specified for this purpose; install in accordance with the recommendations of the connector manufacturer. Where a new manhole is constructed on an existing line, remove existing pipe as necessary to construct the manhole. Cut existing pipe so that pipe ends are approximately flush with the interior face of manhole wall, but not protruding into the manhole. Use resilient connectors as previously specified for pipe connectors to concrete manholes.

3.1.5 Miscellaneous Construction and Installation

3.1.5.1 Connecting to Existing Manholes

Pipe connections to existing manholes shall be made so that finish work will conform as nearly as practicable to the applicable requirements specified for new manholes, including all necessary concrete work, cutting, and shaping. The connection shall be centered on the manhole. Holes for the new pipe shall be of sufficient diameter to allow packing cement mortar around the entire periphery of the pipe but no larger than 1.5 times the diameter of the pipe. Cutting the manhole shall be done in a manner that will cause the least damage to the walls.

3.1.5.2 Metal Work

a. Workmanship and finish: Perform metal work so that workmanship and finish will be equal to the best practice in modern structural shops and foundries. Form iron to shape and size with sharp lines and angles. Do shearing and punching so that clean true lines and surfaces are produced. Make castings sound and free from warp, cold shuts, and blow holes that may impair their strength or appearance. Give exposed surfaces a smooth finish with sharp well-defined lines and arises. Provide necessary rabbets, lugs, and brackets wherever necessary for fitting and support.

3.1.6 Omitted

3.1.7 Installations of Wye Branches

Cutting into piping for connections shall not be done except in special approved cases. When the connecting pipe cannot be adequately supported on undisturbed earth or tamped backfill, the pipe shall be encased in concrete backfill or supported on a concrete cradle as directed. Concrete required because of conditions resulting from faulty construction methods or negligence by the Contractor shall be installed at no additional cost to the Government. The installation of wye branches in an existing sewer shall be made by a method which does not damage the integrity of the existing sewer. One acceptable method consists of removing one pipe section, breaking off the upper half of the bell of the next lower section and half of the running bell of wye section. After placing the new section, it shall be rotated so that the broken half of the bell will be at the bottom. The two joints shall then be made with joint packing and cement mortar.

3.2 FIELD QUALITY CONTROL

3.2.1 Field Tests and Inspections

The Contracting Officer will conduct field inspections and witness field

tests specified in this section. The Contractor shall perform field tests and provide labor, equipment, and incidentals required for testing. Be able to produce evidence, when required, that each item of work has been constructed in accordance with the drawings and specifications.

3.2.2 Tests for Nonpressure Lines

Check each straight run of pipeline for gross deficiencies by holding a light in a manhole; it shall show a practically full circle of light through the pipeline when viewed from the adjoining end of line. When pressure piping is used in a nonpressure line for nonpressure use, test this piping as specified for nonpressure pipe.

3.2.2.1 Leakage Tests

Test lines for leakage by either infiltration tests or exfiltration tests, or by low-pressure air tests. Prior to testing for leakage, backfill trench up to at least lower half of pipe. When necessary to prevent pipeline movement during testing, place additional backfill around pipe sufficient to prevent movement, but leaving joints uncovered to permit inspection. When leakage or pressure drop exceeds the allowable amount specified, make satisfactory correction and retest pipeline section in the same manner. Correct visible leaks regardless of leakage test results.

a. Infiltration tests and exfiltration tests: Perform these tests for sewer lines made of the specified materials, not only concrete, in accordance with ASTM C 969. Make calculations in accordance with the Appendix to ASTM C 969.

b. Low-pressure air tests: Perform tests as follows:

(1) Concrete pipelines: Test in accordance with ASTM C 924. Allowable pressure drop shall be as given in ASTM C 924. Make calculations in accordance with the Appendix to ASTM C 924.

(2) Ductile-iron pipelines: Test in accordance with the applicable requirements of ASTM C 924. Allowable pressure drop shall be as given in ASTM C 924. Make calculations in accordance with the Appendix to ASTM C 924.

(3) ABS composite plastic pipelines: Test in accordance with the applicable requirements of UBPPA UNI-B-6. Allowable pressure drop shall be as given in UBPPA UNI-B-6. Make calculations in accordance with the Appendix to UBPPA UNI-B-6.

(4) PVC plastic pipelines: Test in accordance with UBPPA UNI-B-6. Allowable pressure drop shall be as given in UBPPA UNI-B-6. Make calculations in accordance with the Appendix to UBPPA UNI-B-6.

-- End of Section --

SECTION TABLE OF CONTENTS

DIVISION 02 - SITE CONSTRUCTION

SECTION 02547

BITUMINOUS PAVEMENT WITH BASE COURSE

01/98

PART 1 GENERAL

1.1 REFERENCES
1.2 DESCRIPTION OF WORK
1.3 DESCRIPTION OF TERMS
1.4 APPLICABLE SPECIFICATIONS
1.5 OMITTED
1.6 OMITTED
1.7 SUBMITTALS
1.8 SAFETY PRECAUTIONS
1.9 EQUIPMENT, TOOLS, AND MACHINES
1.9.1 Bituminous Distributors
1.9.2 Single-Pass, Surface-Treatment Machines
1.9.3 Heating Equipment for Storage Tanks
1.9.4 Power Rollers
1.9.5 Mechanical Spreaders
1.9.6 Brooms and Blowers
1.9.7 Scales
1.9.8 Weighhouse
1.10 SAMPLING AND TESTING
1.10.1 Wear Test
1.10.2 Soundness Test
1.11 WEATHER LIMITATIONS

PART 2 PRODUCTS

2.1 MATERIALS
2.1.1 Aggregate Base Coat
2.1.2 Primer Coat
2.1.3 Tack Coat
2.1.4 Bituminous Plant Mix Pavement
2.1.5 Asphalt Cement for Plant Mix
2.1.6 Bituminous Concrete Binder Course
2.1.7 Bituminous Concrete Surface Course
2.1.8 Bituminous Materials

PART 3 EXECUTION

3.1 ESTABLISHMENT OF JOB-MIX FORMULA, INCLUDING SAMPLING AND TESTING
3.1.1 Establishment
3.1.2 Sampling and Testing

-- End of Section Table of Contents --

SAVH-02547

CEGS-02555 (April 1989)

Includes changes through Notice 5 (June 1995)

SECTION 02547

BITUMINOUS PAVEMENT WITH BASE COURSE
(Modified North Carolina Department of Transportation Specifications)
(For less than 1,000 tons)
01/98

PART 1 GENERAL

1.1 REFERENCES

The publications listed below form a part of this specification to the extent referenced. The publications are referred to in the text by basic designation only.

AMERICAN SOCIETY FOR TESTING AND MATERIALS (ASTM)

ASTM C 88	(1990) Soundness of Aggregates by Use of Sodium Sulfate or Magnesium Sulfate
ASTM C 131	(1989) Resistance to Degradation of Small-Size Coarse Aggregate by Abrasion and Impact in the Los Angeles Machine
ASTM D 75	(1987; R 1992) Sampling Aggregates
ASTM D 140	(1993) Sampling Bituminous Materials

1.2 DESCRIPTION OF WORK

The work covered by this section consists of the construction of a bituminous pavement consisting of a base course, bituminous prime and tack coats and a bituminous surface course and/or courses on a properly prepared subgrade and in conformity with the lines, grades, thicknesses and typical section and/or sections shown on the plans. The construction of the bituminous pavement shall conform to the requirements of the "North Carolina Department of Transportation Standard Specifications for Roads and Structures," 1990 Edition, except for the modifications or revisions specified herein.

1.3 DESCRIPTION OF TERMS

Wherever in the North Carolina Department of Transportation (NCDOT) Standard Specifications for Roads and Structures, hereinafter referred to as the "Standard Specifications," the following terms are used, the intent shall be as follows:

"State" ---------- U.S. Government

"Commission" ---------- Corps of Engineers, Party of the First

Part

"Engineer" ---------- Contracting Officer, Corps of Engineers

1.4 APPLICABLE SPECIFICATIONS

The following sections of NCDOT Standard Specifications form a part of this section of the specifications, except as hereinafter modified:

Section	Section Title
101	Definition of Terms
520	Aggregate Base Course, (Type - A Aggregate)
600	Prime Coat
605	Tack Coat
610	Bituminous Plant Mix Pavements - General
620	Asphalt Cement for Plant Mix
640	Bituminous Concrete Binder Course, Type H
645	Bituminous Concrete Surface Course, Type I-1
1020	Bituminous Materials

All sections referenced in the designated sections above shall also form a part of these Technical Provisions.

1.5 OMITTED
1.6 OMITTED

1.7 SUBMITTALS

Government approval is required for submittals with a "G" designation; submittals not having a "G" designation are for information only. When used, a designation following the "G" designation identifies the office that will review the submittal for the Government. The following shall be submitted in accordance with Section 01330 SUBMITTAL PROCEDURES:

SD-04 Samples

Pavement Samples and Plant Mixtures

Provide pavement samples and plant mixture samples as described in paragraph 3.2.2 and 3.5

SD-06 Test Reports

Tests

Copies of pavement job mix formula and test data results, within 24 hours after completion of each test.

SD-07 Certificates

Waybills and Delivery Tickets

Copies of waybills and delivery tickets shall be submitted during progress of the work.

1.8 SAFETY PRECAUTIONS

No smoking, or open flames shall be permitted within 25 feetof heating, distributing, or transferring operations of bituminous materials other than

bituminous emulsions.

1.9 EQUIPMENT, TOOLS, AND MACHINES

1.9.1 Bituminous Distributors

The distributors shall have pneumatic tires of such width and number that the load produced on the base surface does not exceed 650 pounds per inch of tire width. Distributors shall be designed and equipped to distribute bituminous material uniformly at even heat on various widths of surface at readily determined and controlled rates ranging from 0.05 to 2.00 gallons per square yard, with a pressure range of 25 to 75 psi. The allowable variation from any specified rate shall not exceed 5 percent. Distributor equipment shall include a separate power unit for the bitumen pump, full-circulation spray bars, tachometer, pressure gauges, volume-measuring devices, a thermometer for reading the temperature of tank contents, and a hose attachment suitable for applying bituminous material to areas not accessible with distributor spray bar. The distributor shall be equipped for circulation and agitation of bituminous material during the heating process.

1.9.2 Single-Pass, Surface-Treatment Machines

The machines shall be capable of spraying bituminous material and spreading aggregate in one pass. Bituminous spraying equipment shall conform to the requirements given above for a bituminous distributor. The machine shall be capable of spreading aggregates at controlled amounts per square yard as specified. In addition, the single-pass, surface-treatment machine shall be capable of placing a surface treatment adjacent to an existing surface treatment, forming a joint of the same thickness and uniformity as other portions of the surface treatment. Ridges or blank spaces will not be permitted. Joints in the second application shall be formed at least 1 foot from those formed in the first application.

1.9.3 Heating Equipment for Storage Tanks

The equipment shall consist of coils and equipment for producing steam or hot oil and be designed to prevent the introduction of steam or hot oil into the material. An armored thermometer with a range of 100 to 400 degrees F shall be affixed to the tank so the temperature of the bituminous material may be determined at all times.

1.9.4 Power Rollers

Power rollers shall be steel-wheeled or pneumatic-tired type, conforming to the following requirements:

a. Steel-wheeled rollers shall have at least one steel drum and weigh a minimum of 5 tons. Steel wheels of the rollers shall be equipped with adjustable scrapers.

b. Pneumatic-tired rollers shall be self-propelled and have wheels mounted on two axles in such manner that the rear tires will not follow in the tracks of the forward group. Tires shall be uniformly inflated to not less than 60 psi nor more than 80 psi pressure. The pneumatic-tired rollers shall be equipped with boxes or platforms for ballast loading and shall be loaded so that the tire print width of each wheel is not less than the clear distance between tire prints.

1.9.5 Mechanical Spreaders

The spreaders shall be adjustable and capable of spreading aggregate at controlled amounts per square yard, as specified.

1.9.6 Brooms and Blowers

The machines shall be of the power type, capable of cleaning surfaces to be treated.

1.9.7 Scales

The scales shall be standard truck scales of the beam type equipped with a weight-recording device. The scales shall be sufficient in size and capacity to accommodate the trucks used in hauling aggregates. The scales shall be tested and approved by an inspector of the State Inspection Bureau charged with scale inspection within the state in which the project is located. If an official of the inspection bureau is not available, the scales shall be tested in accordance with state specifications by the Contractor in the presence of the Contracting Officer. The Contractor shall have the necessary number of standard weights on hand at all times for testing the scales.

1.9.8 Weighhouse

The house shall be weatherproof and shall be constructed in a manner to afford adequate protection for the indicating and recording devices of the scales.

1.10 SAMPLING AND TESTING

The sampling and testing shall be the responsibility of the Contractor. Sampling and testing shall be performed by an approved commercial testing laboratory, or by the Contractor, subject to approval. Sampling shall be in accordance with ASTM D 75 for aggregates and ASTM D 140 for bituminous material, unless otherwise directed. Tests shall be performed in sufficient number to insure that materials meet specified requirements.

1.10.1 Wear Test

The wear test shall be performed in accordance with ASTM C 131 to ensure that aggregates have a percentage of wear not exceeding 40 percent after 500 revolutions. One test shall be performed for every 50 tons of aggregates in stockpiles or at the source.

1.10.2 Soundness Test

The soundness test shall be performed as specified by ASTM C 88 to ensure that aggregates have a weight loss not greater than 15 percent when subjected to five cycles of the magnesium sulfate test. One test shall be performed for every 50 tons of aggregates in stockpiles or at the source.

1.11 WEATHER LIMITATIONS

Bituminous surface treatment shall be applied only when the existing surface or base course is dry. Bituminous surface treatment shall not be applied when either the atmospheric temperature, in the shade, is below 50 degrees F or the pavement surface to be treated is below 70 degrees F

unless otherwise directed.

PART 2 PRODUCTS

2.1 MATERIALS

Mineral aggregate and bituminous material of the following types, gradations, grades, and consistencies that meet the requirements of stripping, wear, and soundness tests as specified by NCDOT and in paragraph SAMPLING AND TESTING shall be used.

2.1.1 Aggregate Base Coat

Aggregate base course, Type A, per NCDOT Sec 520.

2.1.2 Primer Coat

Primer coat per NCDOT Sec 600.

2.1.3 Tack Coat

Tack coat per NCDOT Sec 605.

2.1.4 Bituminous Plant Mix Pavement

Bituminous plant mix pavement per NCDOT Sec 610.

2.1.5 Asphalt Cement for Plant Mix

Asphalt cement for plant mix per NCDOT Sec 620.

2.1.6 Bituminous Concrete Binder Course

Bituminous concrete binder course , Type H, per NCDOT 640.

2.1.7 Bituminous Concrete Surface Course

Bituminous concrete surface course, Type I-1, per NCDOT Sec 645.

2.1.8 Bituminous Materials

Bituminous materials per NCDOT Section 1020.

PART 3 EXECUTION

3.1 ESTABLISHMENT OF JOB-MIX FORMULA, INCLUDING SAMPLING AND TESTING

The bituminous plant mix surface course shall be applied in accordance with the Standard Specifications using asphaltic concrete "I-1." If a bituminous concrete binder course is specified, it shall be Type "H."

3.1.1 Establishment

When the estimated quantity of bituminous pavement mixture exceeds 300 tons but is less than 1,000 tons, the job-mix formula together with all pertinent laboratory and field test data shall be furnished the Contracting Officer for review and approval at least 45 days prior to beginning paving operations. Simultaneously, the same job-mix formula and data together with sufficient sized samples and source of materials shall be furnished

the Director, U.S. Army Corps of Engineers, South Atlantic Division Testing Laboratory at 611 South Cobb Drive, Marietta, Georgia 30060 for review and check testing by the Government.

3.1.2 Sampling and Testing

The above mentioned samples and test data concerning the satisfactoriness of all materials in the mixture to be used in this work, including the Marshall test properties, shall be furnished for approval by the Contracting Officer as specified above, except for small projects where the plant mixture is 300 tons and less as specified below. The Division Testing Laboratory will notify the Contracting Officer of the satisfactoriness of the proposed mix design prior to the Contractor beginning placement of pavement. The Contractor shall perform the necessary density tests of the compacted base course and the compacted bituminous surface course as directed at no additional cost to the Government.

-- End of Section --

SECTION TABLE OF CONTENTS

DIVISION 02 - SITE CONSTRUCTION

SECTION 02555A

*3 PREFABRICATED UNDERGROUND COOLING DISTRIBUTION SYSTEM

12/01

PART 1 GENERAL

1.1 REFERENCES
1.2 SYSTEM DESCRIPTION
1.3 SUBMITTALS
1.4 DELIVERY AND STORAGE
1.5 FIELD MEASUREMENTS
1.6 WELDING

PART 2 PRODUCTS

2.1 STANDARD PRODUCTS
2.2 PIPING AND CASING MATERIALS
2.2.1 General
2.2.2 Piping
2.2.2.1 Steel Pipe
2.2.2.2 Copper Tubing
2.2.2.3 Omitted
2.2.2.4 Polyvinyl Chloride (PVC) Pipe
2.2.2.5 Joints and Fittings for Copper Tubing
2.2.3 Casings
2.2.3.1 Polyvinyl Chloride (PVC) Casing
2.3 PIPING CONNECTIONS
2.3.1 Steel Pipe
2.3.2 Copper Pipe
2.3.3 Plastic Pipe
2.3.3.1 General
2.3.3.2 Polyvinyl Chloride (PVC)
2.4 END SEALS
2.4.1 General
2.4.2 Types
2.4.3 Casing and End Seal Testing and Certification
2.5 INSULATION
2.5.1 Factory Applied Insulation
2.5.2 Field Applied Insulation
2.6 OMITTED
2.7 OMITTED
2.8 TREATED WATER

PART 3 EXECUTION

3.1 INSTALLATION
3.2 PIPING SYSTEMS
3.2.1 Buried Insulated Systems
3.3 OMITTED
3.4 THRUST BLOCKS
3.5 INSTALLATION OF PIPING SYSTEMS
3.5.1 Pitching of Horizontal Piping

3.5.2 Open Ends
3.5.3 Cutting Prefabricated Piping Sections
3.5.4 Joints
3.5.4.1 Welded Joints
3.5.4.2 Threaded Joints
3.5.4.3 Grooved Mechanical Joints
3.5.4.4 Brazed Joints
3.5.4.5 Nonmetallic Pipe Joints
3.5.5 Expansion Loops
3.5.6 Anchors
3.5.7 Field Casing Closures
3.5.8 Underground Warning Tape
3.5.9 Markers for Underground Piping
3.6 EARTHWORK
3.7 ELECTRICAL WORK
3.8 TESTING
3.8.1 Metallic Pipe Welds
3.8.2 Carrier Pipe Cleaning and Testing
3.8.2.1 Cleaning Carrier Pipe
3.8.2.2 Hydrostatic Pressure Cycling and Tests
3.8.2.3 Operational Test
3.8.2.4 Final Hydrostatic Test

-- End of Section Table of Contents --

UFGS-02555A (December 2001)

SECTION 02555A

*3 PREFABRICATED UNDERGROUND COOLING DISTRIBUTION SYSTEM
12/01

PART 1 GENERAL

1.1 REFERENCES

The publications listed below form a part of this specification to the extent referenced. The publications are referred to in the text by basic designation only.

AMERICAN SOCIETY FOR TESTING AND MATERIALS (ASTM)

ASTM A 105/A 105M	(2001) Carbon Steel Forgings for Piping Applications
ASTM A 106	(1999e1) Seamless Carbon Steel Pipe for High-Temperature Service
ASTM A 183	(1998) Carbon Steel Track Bolts and Nuts
ASTM A 234/A 234M	(2000) Piping Fittings of Wrought Carbon Steel and Alloy Steel for Moderate and High Temperature Service
ASTM A 53/A 53M	(2001) Pipe, Steel, Black and Hot-Dipped, Zinc-Coated, Welded and Seamless
ASTM A 536	(1984; R 1999el) Ductile Iron Castings
ASTM B 62	(1993) Composition Bronze or Ounce Metal Castings
ASTM B 75	(1999) Seamless Copper Tube
ASTM B 88	(1999) Seamless Copper Water Tube
ASTM C 518	(1998) Steady-State Heat Flux Measurements and Thermal Transmission Properties by Means of the Heat Flow Meter Apparatus
ASTM C 591	(1994) Unfaced Preformed Rigid Cellular Polyisocyanurate Thermal Insulation
ASTM D 1384	(1997a) Corrosion Test for Engine Coolants in Glassware
ASTM D 1784	(1999a) Rigid Poly(Vinyl Chloride) (PVC) Compounds and Chlorinated Poly(Vinyl Chloride) (CPVC) Compounds
ASTM D 2000	(1999) Rubber Products in Automotive Applications

ASTM D 2241	(2000) Poly(Vinyl Chloride) (PVC) Pressure-Rated Pipe (SDR Series)
ASTM D 2564	(1996a) Solvent Cements for Poly(Vinyl Chloride) (PVC) Plastic Piping Systems
ASTM D 3139	(1998) Joints for Plastic Pressure Pipes Using Flexible Elastomeric Seals
ASTM F 477	(1999) Elastomeric Seals (Gaskets) for Joining Plastic Pipe

AMERICAN WATER WORKS ASSOCIATION(AWWA)

AWWA C606	(1997) Grooved and Shouldered Joints

ASME INTERNATIONAL (ASME)

ASME B1.20.1	(1983; R 1992) Pipe Threads, General Purpose (Inch)
ASME B16.11	(1996) Forged Fittings, Socket-Welding and Threaded
ASME B16.18	(1984; R 1994) Cast Copper Alloy Solder Joint Pressure Fittings
ASME B16.22	(1995; B16.22a1998) Wrought Copper and Copper Alloy Solder Joint Pressure Fittings
ASME B16.26	(1988) Cast Copper Alloy Fittings for Flared Copper Tubes
ASME B16.9	(1993) Factory-Made Wrought Steel Buttwelding Fittings
ASME B31.1	(1998) Power Piping
ASME BPVC SEC IX	(1998) Boiler and Pressure Vessel Code; Section IX, Welding and Brazing Qualifications

COPPER DEVELOPMENT ASSOCIATION (CDA)

CDA A4015	(1995) Copper Tube Handbook

MANUFACTURERS STANDARDIZATION SOCIETY OF THE VALVE AND FITTINGS INDUSTRY (MSS)

MSS SP-73	(1991; R 1996) Brazing Joints for Copper and Copper Alloy Pressure Fittings

1.2 SYSTEM DESCRIPTION

The system consists of a buried prefabricated chilled water distribution system including service connections to a point 6 inches inside of the building. The contract drawings show the specific arrangement of piping, sizes and grades of pipe, and other details. The system is designed for an

operating pressure of 250 psig and an operating temperature of 45-60 degrees F for chilled water.

1.3 SUBMITTALS

Government approval is required for submittals with a "G" designation; submittals not having a "G" designation are for information only. When used, a designation following the "G" designation identifies the office that will review the submittal for the Government. The following shall be submitted in accordance with Section 01330 SUBMITTAL PROCEDURES:

SD-02 Shop Drawings

Distribution System

Detail drawings consisting of fabrication and assembly drawings, for all parts of the work in sufficient detail to check conformity with the requirements of the contract documents, prior to installation. Detail drawings shall also contain complete piping, wiring and schematic diagrams and any other details to demonstrate that the system has been coordinated and will properly function as a unit. Drawings shall show proposed layout, method of compensation for pipe expansion and contraction, anchorage of equipment and appurtenances, and equipment relationship to other parts of the work including clearances required for maintenance and operation. The drawings shall clearly identify any proposed deviations from the requirements of the contract documents.

SD-03 Product Data

Distribution System

Data composed of catalog cuts, brochures, circulars, specifications and product data, and printed information in sufficient detail and scope to verify compliance with the requirements of the contract documents.

SD-07 Certificates

Distribution System

The manufacturer's or system fabricator's written certification stating that the distribution system furnished meets all the requirements of this specification.

Welding

Prior to welding operations, a copy of qualified procedures and a list of names and identification symbols of qualified welders and welding operators.

SD-10 Operation and Maintenance Data

Distribution System

Six copies of operation and 6 copies of maintenance manuals for the equipment furnished, 1 complete set prior to performance testing and the remainder upon acceptance. Operation manuals shall detail the step-by-step procedures required for equipment

startup, operation, and shutdown. Operation manuals shall include the manufacturer's name, model number, parts list, and brief description of all equipment and their basic operating features. Maintenance manuals shall list routine maintenance procedures, possible breakdowns and repairs, and troubleshooting guides. Maintenance manuals shall include piping and equipment layout and simplified wiring and control diagrams of the equipment system as installed. Manuals shall be approved prior to the field performance testing.

1.4 DELIVERY AND STORAGE

After delivery to the jobsite, all materials and equipment shall be protected from anything which could cause damage to the material or equipment. Pipe shall be sealed at each end to keep the interior clean and free of dirt and debris. Fittings shall be kept together and their interior surfaces shall remain clean. Insulation shall be kept dry and clean.

1.5 FIELD MEASUREMENTS

The Contractor shall become familiar with all details of the work, verify all dimensions in the field and shall advise the Contracting Officer of any discrepancy before performing the work.

1.6 WELDING

Piping shall be welded in accordance with qualified procedures using performance qualified welders and welding operators. Procedures and welders shall be qualified in accordance with ASME BPVC SEC IX. Welding procedures qualified by others, and welders and welding operators qualified by another employer may be accepted as permitted by ASME B31.1. The Contracting Officer shall be notified 24 hours in advance of tests and the tests shall be performed at the work site if practicable. The welder or welding operator shall apply his assigned symbol near each weld he makes as a permanent record. Structural members shall be welded in accordance with Section 05120A STRUCTURAL STEEL.

PART 2 PRODUCTS

2.1 STANDARD PRODUCTS

System components shall be standard products of a manufacturer regularly engaged in the manufacture of the product and shall essentially duplicate items that have been in satisfactory use for at least 2 years prior to bid opening. The system shall be supported by a service organization that is, in the opinion of the Contracting Officer, reasonably convenient to the site.

2.2 PIPING AND CASING MATERIALS

2.2.1 General

Metallic pressure pipe, fittings, and piping accessories shall conform to the requirements of ASME B31.1 and shall be types suitable for the temperature and pressure of the water.

2.2.2 Piping

2.2.2.1 Steel Pipe

Piping shall conform to ASTM A 53/A 53M, Grade B, standard weight, black or to ASTM A 106, Grade B, standard weight.

2.2.2.2 Copper Tubing

Copper tubing shall conform to ASTM B 88, Type K or L.

2.2.2.3 Omitted

2.2.2.4 Polyvinyl Chloride (PVC) Pipe

PVC pipe shall conform to ASTM D 2241 with a Standard Thermoplastic Pipe Dimension Ratio (SDR) of 26 and PVC 1120 or 1220 as the material.

2.2.2.5 Joints and Fittings for Copper Tubing

Wrought copper and bronze solder-joint pressure fittings shall conform to ASME B16.22 and ASTM B 75 Cast copper alloy solder-joint pressure fittings shall conform to ASME B16.18. Cast copper alloy fittings for flared copper tube shall conform to ASME B16.26 and ASTM B 62. Brass or bronze adapters for brazed tubing may be used for connecting tubing to flanges and to threaded ends of valves and equipment. Extracted brazed tee joints produced with an acceptable tool and installed as recommended by the manufacturer may be used. Grooved mechanical joints and fittings shall be designed for not less than 125 psig service and shall be the product of the same manufacturer. Grooved fitting and mechanical coupling housing shall be ductile iron conforming to ASTM A 536. Gaskets for use in grooved joints shall be molded synthetic polymer of pressure responsive design and shall conform to ASTM D 2000 for circulating medium up to 230 degrees F. Grooved joints shall conform to AWWA C606. Coupling nuts and bolts for use in grooved joints shall be steel and shall conform to ASTM A 183.

2.2.3 Casings

2.2.3.1 Polyvinyl Chloride (PVC) Casing

PVC casings shall conform to ASTM D 1784, Class 12454-B with a minimum thickness equal to the greater of 1/100 the diameter of the casing or 60 mils.

2.3 PIPING CONNECTIONS

2.3.1 Steel Pipe

Steel pipe smaller than 3/4 inch may be threaded; otherwise, all steel pipe shall be welded. Steel welding fittings shall conform to the requirements of ASTM A 105/A 105M or ASTM A 234/A 234M. Welding fittings shall also conform to ASME B16.9 for buttweld fittings and ASME B16.11 for socket-weld fittings. Long radius buttwelding elbows conforming to ASME B16.9 shall be used whenever space permits. Pipe Threads shall conform to ASME B1.20.1. Pipe to be threaded shall be schedule 80.

2.3.2 Copper Pipe

Copper pipe shall be brazed or connected using an insulated pipe coupling.

Wrought copper or cast copper alloy solder joint pressure fittings shall conform to MSS SP-73. Insulated pipe couplings for copper pipe shall be cast bronze containing an O-ring seal on each end and shall be jacketed and sealed to act as an expansion joint.

2.3.3 Plastic Pipe

a. Pipe, fittings, flanges, and couplings shall have end connections of the adhesive bell and spigot type. Threaded piping, including pipe, fittings, flanges, and couplings, will not be permitted.

b. Flanged Connections: Flat face flanged connections shall be provided between plastic piping and metal piping. Plastic flanges shall be suitable for connection to ASME Class 150 flanges.

c. RTRP Piping Sizes: When piping sizes other than 2, 3, 4, 6, and 8 inchesare indicated, the next larger piping size shall be provided. The connecting system piping shall be of the same size or increased to meet the next size of RTRP piping.

2.3.3.1 General

Plastic fittings shall be made of the same type and grade of material as the piping to which they will be connected and shall be furnished by the manufacturer who supplies the pipe. Fittings shall have temperature and pressure ratings not less than those of the connecting piping.

2.3.3.2 Polyvinyl Chloride (PVC)

Polyvinyl chloride (PVC) pipe shall be solvent welded or connected using bell and spigot connections. The solvent used to connect fittings and pipe shall conform to the requirements of ASTM D 2564. Bell and spigot joints utilizing elastomeric seals shall conform to the requirements of ASTM D 3139. The elastomeric seals shall conform to ASTM F 477.

2.4 END SEALS

2.4.1 General

Each preinsulated section of piping shall have a complete sealing of the insulation to provide a permanent water and vapor seal at each end of the preinsulated section of piping. Preinsulated sections of piping modified in the field shall be provided with an end seal which is equivalent to the end seals furnished with the preinsulated section of piping. End seals must be tested and certified in accordance with paragraph Casing and End Seal Testing and Certification.

2.4.2 Types

End seals provided shall be one of the following types:

a. Carrying the outer casing over tapered pipe insulation ends and extending it to the carrier pipe. Sufficient surface bonding area shall be provided between the casing and the carrier pipe.

b. Using specially designed molded caps made of polyethylene or rubber of standard manufactured thickness. A minimum 1-1/2 inch surface bonding area shall be provided between the cap and both the casing and carrier pipe.

c. Using elastomer-ring end seals designed and dimensioned to fit in the annular space between the casing and the carrier pipe.

d. Using a waterproof mastic seal vapor barrier over the exposed insulation ends.

e. Shrink sleeves.

2.4.3 Casing and End Seal Testing and Certification

Testing and certification procedures by an independent testing laboratory shall demonstrate that casings and end seals are capable of resisting penetration of water into the casing and insulation. The test shall be performed on the type of prefabricated system to be furnished. If more than one type of prefabricated system is to be used, then the tests shall be performed on each type. The test shall consist of hot and cold cycle testing followed by immersion in a water filled chamber with a head pressure. The hot and cold cycle testing shall consist of 14 days of temperature cycling. A fluid with a temperature of 40 degrees F shall circulate through the carrier pipe alternating every 24-hours with a fluid with a temperature of 200 degrees F circulating through the carrier pipe for a low temperature hot water or dual temperature service or 75 degrees F for a chilled water service. While the hot and cold cycle test is being performed, the test sample is either buried or encased in dry bedding sand with a minimum of 12 inches of sand all around the test sample. The carrier pipe size of the test sample shall be 3 inches in diameter and shall be restrained during the test period. The insulation thickness shall not exceed the maximum thickness provided for the piping in the project. Transition time for temperature cycle testing shall not exceed 15 minutes in going from cold to hot and 30 minutes in going from hot to cold. The fluid in the carrier pipe may be water, oil or heat transfer fluid. Following the hot and cold cycling test, the test sample shall be immersed in a water filled chamber. The pressure on the highest point of the test sample shall not be less than 20 feet of water head pressure subjected over the entire length of the 8 foot test sample of prefabricated pipe. The water shall contain a dye penetrant, which will be used to check for end seal leakage. The pressure in the chamber must be held for not less than 48 hours. Upon completion of this pressure test, the test sample shall be cut open. With the use of a light that will readily show the presence of the dye that was in the water, the test sample shall be inspected. Evidence of the dye inside the test sample shall indicate that the end seal is not acceptable and cannot be certified.

2.5 INSULATION

The Contractor shall comply with EPA requirements in accordance with Section 01670A RECYCLED / RECOVERED MATERIALS.

2.5.1 Factory Applied Insulation

Prefabricated pipe and fittings shall be insulated in the factory. Foam insulation for prefabricated insulated pipe and fittings shall be polyurethane foam meeting the requirements of ASTM C 591 having a density not less than 2 pounds per cubic foot (pcf). The polyurethane foam shall completely fill the annular space between the carrier pipe and the casing. Insulation thickness shall be a minimum of 1.5 inches. The insulation thermal conductivity factor shall not exceed the numerical value of 0.15 Btu-inch/square foot-degree F-hour at 75 degrees F, when tested in

accordance with ASTM C 518. Manufacturer shall certify that the insulated pipe is free of insulation voids.

2.5.2 Field Applied Insulation

Field applied insulation for fittings, and field casing closures, if required, and other piping system accessories shall be polyurethane matching the pipe insulation. Thickness shall match adjacent piping insulation thickness. Buried fittings and accessories shall have field applied polyurethane insulation to match adjacent piping and shall be protected with a covering matching the pipe casing. Shrink sleeves with a minimum thickness of 50 mils shall be provided over casing connection joints.

2.6 OMITTED
2.7 OMITTED

2.8 TREATED WATER

A 30 percent concentration by volume of industrial grade ethylene glycol shall be provided for the system. Glycol shall be tested in accordance with ASTM D 1384 with less than 0.5 mils penetration per year for all system metals. The glycol shall contain corrosion inhibitors. Silicate based inhibitors shall not be used. The solution shall be compatible with pump seals, other elements of the system, and water treatment chemicals used within the system.

PART 3 EXECUTION

3.1 INSTALLATION

For all preinsulated, prefabricated systems, the Contractor shall obtain the services of a trained representative of the pipe system manufacturer to instruct the Contractor's work forces in the installation procedures to ensure that the system is installed in accordance with the manufacturer's published instructions and the plans and specifications. The manufacturer's representative shall be a person who regularly performs such duties for the manufacturer. The Contractor shall furnish the Contracting Officer a list of names of personnel trained and certified by the pipe system manufacturer in the installation of this system. Only personnel whose names appear on the list will be allowed to install the system. The list shall not be more than 1 year old.

3.2 PIPING SYSTEMS

3.2.1 Buried Insulated Systems

Buried insulated systems shall consist of carrier pipe, insulation, casing, end seals, fittings and accessories as specified.

3.3 OMITTED

3.4 THRUST BLOCKS

Thrust blocks shall be installed at the locations shown or recommended by the pipe system manufacturer. Thrust blocks may not be required on all systems, and the need for thrust blocks shall be as recommended by the system manufacturer. Thrust blocks, if necessary, shall be installed at all changes in direction, changes in size, valves and terminal ends, such

as plugs, caps and tees. Thrust blocks shall be concrete having a compressive strength of not less than 2000 psiafter 28 days and shall be in accordance with Section 03300CAST-IN-PLACE STRUCTURAL CONCRETE. Thrust blocks shall be placed between solid ground and the fitting to be anchored. Unless otherwise indicated or directed, the base and the thrust bearing sides of the thrust blocks shall be poured directly against undisturbed earth. The sides of the thrust blocks not subject to thrust may be poured against forms. Thrust blocks shall be placed so that the joints for all fittings will be accessible for repair wherever possible. No pipe joint shall be embedded in concrete unless the assembly has previously been hydrostatically tested. The thrust blocks shall provide for transfer of thrusts and reactions without exceeding the allowable stress of the concrete and shall be installed in accordance with pipe manufacturer's instructions. In muck or peat, all thrusts shall be resisted by piles or tie rods to solid foundations or by removal of peat or muck which shall be replaced with ballast of sufficient stability to resist thrusts.

3.5 INSTALLATION OF PIPING SYSTEMS

The piping system furnished shall be installed in accordance with the piping system manufacturer's instructions. Piping shall be installed without springing or forcing other than what has been calculated for cold spring. Pipe ends shall have burrs removed by reaming and shall be installed to permit free expansion and contraction without damage to joints or hangers. Nonmetallic pipe cut in the field shall be machined to fit couplings or joints and shall be coated or treated to match standard factory coated ends. Copper tubing shall not be installed in the same trench with ferrous piping materials. When nonferrous metallic pipe (e.g., copper tubing) crosses any ferrous piping material, a minimum vertical separation of 12 inches shall be maintained between pipes. Connections between different types of pipe and accessories shall be made with transition fittings approved by the manufacturer of the piping system.

3.5.1 Pitching of Horizontal Piping

Horizontal piping shall be pitched at a grade of not less than 1 inch in 20 feet toward the drain points unless otherwise indicated.

3.5.2 Open Ends

Open ends of pipelines and equipment shall be properly capped or plugged during installation to keep dirt and other foreign matter out of the system.

3.5.3 Cutting Prefabricated Piping Sections

Where prefabricated pipe sections are field cut, new end seals similar to the factory applied end seal shall be provided and installed in accordance with the manufacturer's instructions.

3.5.4 Joints

3.5.4.1 Welded Joints

Welded joints between sections of pipe and between pipe and fittings shall be provided where specified or indicated.

3.5.4.2 Threaded Joints

Threaded joints shall not be used belowground. Joints shall be made tight

with polytetrafluoroethylene tape applied to the male threads only. Not more than 3 threads shall show after the joint is made up.

3.5.4.3 Grooved Mechanical Joints

Grooves shall be prepared according to the coupling manufacturer's instructions. Grooved fittings, couplings, and grooving tools shall be the products of the same manufacturer. Pipe and groove dimensions shall comply with the tolerances specified by the coupling manufacturer. The diameter of grooves made in the field shall be measured using a "go/no-go" gauge, vernier or dial caliper, narrow-land micrometer, or other method specifically approved by the coupling manufacturer for the intended application. Groove width and dimension of groove from end of pipe shall be measured and recorded for each change in grooving tool setup to verify compliance with coupling manufacturer's tolerances. Grooved joints shall not be used in concealed locations.

3.5.4.4 Brazed Joints

Brazed joints for copper pipe and fittings shall conform to CDA A4015. Brazing alloys melting above 1100 degrees F shall be utilized.

3.5.4.5 Nonmetallic Pipe Joints

Nonmetallic pipe joints shall be installed in accordance with the written instructions of the manufacturer.

3.5.5 Expansion Loops

If expansion compensation is needed, expansion loops and expansion bends (Z- and L- type) shall be factory fabricated of casing, insulation, and carrier piping identical to that furnished for straight runs. Expansion loops and bends shall be properly designed in accordance with the allowable stress limits indicated in ASME B31.1 for the type of pipe used. Expansion loops and bends shall be shipped to the jobsite in the maximum size sections feasible to minimize the number of field joints. The expansion loops and bends casing and insulation where applicable, shall be suitably sized to accommodate pipe movement. Field joints shall be made in straight runs of the expansion loops and bends, and the number shall be kept to a minimum. For steel pipe, cold springing shall not be allowed when sizing the expansion loops and bends, but piping shall be cold sprung one-half the calculated maximum operational expansion during field assembly. Pipe stress in expansion loops and bends shall conform to the requirements for expansion loops specified in ASME B31.1.

3.5.6 Anchors

Anchor design shall be in accordance with the published data of the manufacturer and for prefabricated systems shall be factory fabricated by the prefabricated system manufacturer. In all cases, the design shall be such that water penetration, condensation, or vapor transmission will not wet the insulation.

3.5.7 Field Casing Closures

Field insulation and encasement of joints shall be accomplished after the visual and pressure tests specified are completed. Field insulation and encasement shall be in accordance with the manufacturer's written instructions. Thickness dimensions of the insulation and casing materials

shall not be less than those of the adjoining prefabricated section. Insulating material shall be foamed in place polyurethane. Care should be taken to ensure that field closures are made under conditions of temperature and cleanliness required to produce a sound, continuous vapor barrier. A standard polyethylene heat shrink sleeve shall be installed over the casing and shall have a 6 inch minimum overlap at each end.

3.5.8 Underground Warning Tape

Underground warning tape shall be buried above the piping during the trench backfilling and shall be buried approximately 12 inchesdeep. Tape shall be 0.004 inch thick polyethylene tape . Tape shall be 6 inches wide and be printed with repetitive caution warnings along its length. Tapes shall be yellow in color with black letters. Tape color and lettering shall not be affected by moisture or other substances contained in the backfill material.

3.5.9 Markers for Underground Piping

Markers for underground piping shall be placed as indicated approximately 2 feet to the right of the distribution system and referenced to the flow direction in the supply line. The marker shall be concrete 6 inch square or round section 3 feet long. The top edge of the marker shall have a minimum 1/2 inch chamfer all around. The letters CHW shall be impressed or cast on the top of the markers to indicate the type of system that is being identified. Each letter shall be formed with a V-shaped groove and shall have a width of stroke at least 1/4 inch at the top and depth of 1/4 inch. The top of the marker shall protrude not more than 2 inches above finished grade.

3.6 EARTHWORK

Earthwork shall be performed in accordance with Section 02316A EXCAVATION, TRENCHING, AND BACKFILLING FOR UTILITIES SYSTEMS.

3.7 ELECTRICAL WORK

Electrical work shall be performed in accordance with either Section 16375A ELECTRICAL DISTRIBUTION SYSTEM, UNDERGROUND.

3.8 TESTING

Tests shall be conducted before, during, and after installation of the system. All instruments, equipment, facilities, and labor required to properly conduct the tests shall be provided by the Contractor. Test pressure gauges for a specific test shall have dials indicating not less than 1-1/2 times nor more than 2 times the test pressure. It shall be the Contractor's responsibility to make the pipe system workable at his expense.

3.8.1 Metallic Pipe Welds

An approved independent testing firm or firms regularly engaged in radiographic testing shall perform a radiographic examination of the field welds. The radiographic testing shall be performed in accordance with ASME B31.1. All radiographs shall be reviewed and interpreted by a Certified Level III Radiographer employed by the testing firm. Any welds found to be unacceptable shall be removed, rewelded and radiographically reexamined in accordance with the above criteria. Such repair and reexamination shall be accomplished at no cost to the Government.

3.8.2 Carrier Pipe Cleaning and Testing

Distribution piping shall be tested as required before backfilling and with all joints exposed. The area between joints may be backfilled as necessary to prevent pipe movement.

3.8.2.1 Cleaning Carrier Pipe

Prior to testing, the interior of the carrier pipe shall be cleaned of foreign materials by thorough flushing with clean water. Water shall be circulated at a velocity between 2 and 3 m/s (7 and 10 feet per second) for a minimum of 4 hours. If required, temporary and/or supplementary pumps shall be provided to ensure that required velocity is achieved. System strainers shall be cleaned after the flushing operation is complete. Temporary strainers shall be installed as required. After flushing, the water shall remain in the piping system for testing of the system. All air shall be removed from the system prior to starting the tests.

3.8.2.2 Hydrostatic Pressure Cycling and Tests

Hydrostatic pressure cycling shall have 4 cycles. Each cycle shall consist of a 10 minute period at 150 psig followed by a 5 minute period at a pressure less than 50 psig. The next cycle shall begin immediately following the completion of the previous cycle. Pressure rise and drop shall not exceed 100 psi per minute. The pressure gauge shall be located and the pressure measured at the opposite end of the system from where the pressure is applied. After completion of the hydrostatic pressure cycling, the first hydrostatic pressure test shall be performed. During the first hydrostatic pressure test, the system shall be proven tight at a pressure of 1-1/2 times the working pressure up to 150 psig. This pressure shall be held for a minimum of 1 hour. The method of pressurizing the system shall be disconnected from the system before starting the 1 hour pressure holding period. If the pressure cannot be held for the specified length of time, the cause of pressure loss shall be determined, corrected and the hydrostatic pressure cycling and first hydrostatic pressure test shall be repeated until the system can hold the required pressure for at least 1 hour. After successful completion of the first hydrostatic pressure test, the water shall be drained out of the piping system and the piping system filled with treated water as defined in paragraph TREATED WATER for the remaining tests and for permanent operation of the system. The hydrostatic pressure cycling and tests shall be repeated after the system has been filled with treated water, using the same test conditions and criteria.

3.8.2.3 Operational Test

Operational test shall be performed on the complete system or testable portions thereof. The test shall be conducted with full design flows and operating temperatures in all runs of piping as if in service, to demonstrate satisfactory function and operating effectiveness. The operational test will have two cycles. Each cycle shall consist of a 6-hour period with treated water in the system at the maximum operating temperature of 60 degrees F and maximum flow rate, and a period of at least 6-hours with no flow. The Contractor shall supply temporary pumps, piping connections, boilers, chillers and the gauges required to circulate the water at the desired temperatures and flow rates. Water shall be circulated through supply lines and returned through the return piping to demonstrate that the pressure drop is compatible with the flow rate and size of pipe and to show that obstructions do not exist in the piping

system. Any unusual indicated pressure drop will be investigated and any obstructions removed. Any leaks found shall be repaired. After any obstructions have been removed and any leaks repaired, the operational test shall be repeated until successfully passed.

3.8.2.4 Final Hydrostatic Test

After successful completion of the operational test, the system shall be pressurized to 1-1/2 times the working pressure up to 150 psig. This pressure shall be held for a minimum of 4 hours. Means of pressurizing shall be disconnected prior to the start of the 4-hour pressure holding period. If the pressure cannot be held for the specified length of time, the cause of the pressure loss shall be determined, corrected, and all of the hydrostatic pressure cycling and tests repeated.

-- End of Section --

SECTION TABLE OF CONTENTS

DIVISION 02 - SITE CONSTRUCTION

SECTION 02630A

STORM-DRAINAGE SYSTEM

03/00

PART 1 GENERAL

1.1 REFERENCES
1.2 OMITTED
1.3 SUBMITTALS
1.4 DELIVERY, STORAGE, AND HANDLING
1.4.1 Delivery and Storage
1.4.2 Handling

PART 2 PRODUCTS

2.1 PIPE FOR CULVERTS AND STORM DRAINS
2.1.1 Concrete Pipe
2.1.1.1 Omitted
2.1.1.2 Omitted
2.1.1.3 Nonreinforced Pipe
2.1.1.4 Cast-In-Place Nonreinforced Conduit
2.1.2 Omitted
2.1.3 Omitted
2.1.4 Omitted
2.1.5 Omitted
2.1.6 Omitted
2.1.6 Ductile Iron Culvert Pipe
2.1.7 PVC Pipe
2.1.7.1 Type PSM PVC Pipe
2.1.7.2 Profile PVC Pipe
2.1.7.3 Smooth Wall PVC Pipe
2.1.7.4 Corrugated PVC Pipe
2.2 DRAINAGE STRUCTURES
2.2.1 Flared End Sections
2.2.2 Precast Reinforced Concrete Box
2.3 MISCELLANEOUS MATERIALS
2.3.1 Concrete
2.3.2 Mortar
2.3.3 Precast Concrete Segmental Blocks
2.3.4 Brick
2.3.5 Precast Reinforced Concrete Manholes
2.3.6 Prefabricated Corrugated Metal Manholes
2.3.7 Frame and Cover for Gratings
2.3.8 Joints
2.3.8.1 Flexible Watertight Joints
2.3.8.2 External Sealing Bands
2.3.8.3 Flexible Watertight, Gasketed Joints
2.3.8.4 PVC Plastic Pipes
2.3.8.5 Smooth Wall PE Plastic Pipe
2.3.8.6 Corrugated PE Plastic Pipe
2.3.8.7 Profile Wall PE Plastic Pipe
2.3.8.8 Ductile Iron Pipe

2.4 STEEL LADDER
2.5 DOWNSPOUT BOOTS
2.6 RESILIENT CONNECTORS

PART 3 EXECUTION

3.1 EXCAVATION FOR PIPE CULVERTS, STORM DRAINS, AND DRAINAGE STRUCTURES
3.1.1 Trenching
3.1.2 Removal of Rock
3.1.3 Removal of Unstable Material
3.2 BEDDING
3.2.1 Concrete Pipe Requirements
3.2.2 Clay Pipe Requirements
3.2.3 Omitted
3.2.4 Ductile Iron Pipe
3.2.5 Plastic Pipe
3.3 PLACING PIPE
3.3.1 Concrete, Clay, PVC, Ribbed PVC and Ductile Iron Pipe
3.3.2 Elliptical and Elliptical Reinforced Concrete Pipe
3.3.3 Corrugated PE Pipe
3.3.4 Omitted
3.3.5 Omitted
3.3.6 Omitted
3.3.7 Multiple Culverts
3.3.8 Jacking Pipe Through Fills
3.4 JOINTING
3.4.1 Concrete and Clay Pipe
3.4.1.1 Cement-Mortar Bell-and-Spigot Joint
3.4.1.2 Cement-Mortar Oakum Joint for Bell-and-Spigot Pipe
3.4.1.3 Cement-Mortar Diaper Joint for Bell-and-Spigot Pipe
3.4.1.4 Cement-Mortar Tongue-and-Groove Joint
3.4.1.5 Cement-Mortar Diaper Joint for Tongue-and-Groove Pipe
3.4.1.6 Plastic Sealing Compound Joints for Tongue-and-Grooved Pipe
3.4.1.7 Flexible Watertight Joints
3.4.1.8 External Sealing Band Joint for Noncircular Pipe
3.5 DRAINAGE STRUCTURES
3.5.1 Manholes and Inlets
3.5.2 Walls and Headwalls
3.6 STEEL LADDER INSTALLATION
3.7 BACKFILLING
3.7.1 Backfilling Pipe in Trenches
3.7.2 Backfilling Pipe in Fill Sections
3.7.3 Movement of Construction Machinery
3.7.4 Compaction
3.7.4.1 General Requirements
3.7.4.2 Minimum Density
3.7.5 Determination of Density

-- End of Section Table of Contents --

UFGS-02630A (March 2000)

SECTION 02630A

STORM-DRAINAGE SYSTEM
03/00

PART 1 GENERAL

1.1 REFERENCES

The publications listed below form a part of this specification to the extent referenced. The publications are referred to in the text by basic designation only.

ACI INTERNATIONAL (ACI)

ACI 346/346R	(1990) Standard Specification for Cast-in-Place Nonreinforced Concrete Pipe and Recommendations

AMERICAN ASSOCIATION OF STATE HIGHWAY AND TRANSPORTATION OFFICIALS (AASHTO)

AASHTO HB-16	(1996) Standard Specifications for Highway Bridges
AASHTO M 198	(1998) Joints for Circular Concrete Sewer and Culvert Pipe Using Flexible Watertight Gaskets

AMERICAN RAILWAY ENGINEERING & MAINTENANCE-OF-WAY ASSOCIATION (AREMA)

AREMA Manual	(1999) Manual for Railway Engineering (4 Vol.)

AMERICAN SOCIETY FOR TESTING AND MATERIALS (ASTM)

ASTM A 48	(1994a) Gray Iron Castings
ASTM A 123/A 123M	(1997ael) Zinc (Hot-Dip Galvanized) Coatings on Iron and Steel Products
ASTM A 536	(1999el) Ductile Iron Castings
ASTM A 716	(1995) Ductile Iron Culvert Pipe
ASTM A 929/A 929M	(1997) Steel Sheet, Metallic-Coated by the Hot-Dip Process for Corrugated Steel Pipe
ASTM B 26/B 26M	(1998) Aluminum-Alloy Sand Castings
ASTM C 12	(1998el) Installing Vitrified Clay Pipe Lines

ASTM C 14	(1999) Concrete Sewer, Storm Drain, and Culvert Pipe
ASTM C 32	(1999el) Sewer and Manhole Brick (Made from Clay or Shale)
ASTM C 55	(1999) Concrete Brick
ASTM C 62	(1997a) Building Brick (Solid Masonry Units Made from Clay or Shale)
ASTM C 76	(1999) Reinforced Concrete Culvert, Storm Drain, and Sewer Pipe
ASTM C 139	(1999) Concrete Masonry Units for Construction of Catch Basins and Manholes
ASTM C 231	(1997el) Air Content of Freshly Mixed Concrete by the Pressure Method
ASTM C 270	(1997) Mortar for Unit Masonry
ASTM C 425	(1998b) Compression Joints for Vitrified Clay Pipe and Fittings
ASTM C 443	(1998) Joints for Circular Concrete Sewer and Culvert Pipe, Using Rubber Gaskets
ASTM C 478	(1997) Precast Reinforced Concrete Manhole Sections
ASTM C 655	(1995a) Reinforced Concrete D-Load Culvert, Storm Drain, and Sewer Pipe
ASTM C 789	(1998) Precast Reinforced Concrete Box Sections for Culverts, Storm Drains, and Sewers
ASTM C 850	(1998) Precast Reinforced Concrete Box Sections for Culverts, Storm Drains, and Sewers with Less Than 2 Ft. of Cover Subjected to Highway Loadings
ASTM C 877	(1994) External Sealing Bands for Noncircular Concrete Sewer, Storm Drain, and Culvert Pipe
ASTM C 923	(1998) Resilient Connectors Between Reinforced Concrete Manhole Structures, Pipes and Materials
ASTM D 1056	(1998) Flexible Cellular Materials - Sponge or Expanded Rubber
ASTM D 1171	(1994) Rubber Deterioration - Surface Ozone Cracking Outdoors or Chamber (Triangular Specimens)
ASTM D 1557	(1998) Laboratory Compaction

	Characteristics of Soil Using Modified Effort (56,000 ft-lbf/cu. ft. (2,700 kN-m/cu.m.))
ASTM D 1751	(1999) Preformed Expansion Joint Filler for Concrete Paving and Structural Construction (Nonextruding and Resilient Bituminous Types)
ASTM D 1752	(1984; R 1996el) Preformed Sponge Rubber and Cork Expansion Joint Fillers for Concrete Paving and Structural Construction
ASTM D 1784	(1999a) Rigid Poly(Vinyl Chloride) (PVC) Compounds and Chlorinated Poly(Vinyl Chloride) (CPVC) Compounds
ASTM D 2167	(1994) Density and Unit Weight of Soil in Place by the Rubber Balloon Method
ASTM D 2321	(1989; R 1995) Underground Installation of Thermoplastic Pipe for Sewers and Other Gravity-Flow Applications
ASTM D 2922	(1996el) Density of Soil and Soil-Aggregate in Place by Nuclear Methods (Shallow Depth)
ASTM D 3017	(1988; R 1996el) Water Content of Soil and Rock in Place by Nuclear Methods (Shallow Depth)
ASTM D 3034	(1998) Type PSM Poly(Vinyl Chloride) (PVC) Sewer Pipe and Fittings
ASTM F 477	(1999) Elastomeric Seals (Gaskets) for Joining Plastic Pipe
ASTM F 679	(1995) Poly(Vinyl Chloride) (PVC) Large-Diameter Plastic Gravity Sewer Pipe and Fittings
ASTM F 794	(1999) Poly(Vinyl Chloride) (PVC) Profile Gravity Sewer Pipe and Fittings Based on Controlled Inside Diameter
ASTM F 894	(1998a) Polyethylene (PE) Large Diameter Profile Wall Sewer and Drain Pipe
ASTM F 949	(1999) Poly(Vinyl Chloride) (PVC) Corrugated Sewer Pipe with a Smooth Interior and Fittings

1.2 OMITTED

1.3 SUBMITTALS

Government approval is required for submittals with a "G" designation;

submittals not having a "G" designation are for information only. When used, a designation following the "G" designation identifies the office that will review the submittal for the Government. The following shall be submitted in accordance with Section 01330 SUBMITTAL PROCEDURES:

SD-03 Product Data

Placing Pipe

Printed copies of the manufacturer's recommendations for installation procedures of the material being placed, prior to installation.

SD-07 Certificates

Resin Certification
Pipeline Testing
Frame and Cover for Gratings

Certified copies of test reports demonstrating conformance to applicable pipe specifications, before pipe is installed. Certification on the ability of frame and cover or gratings to carry the imposed live load.

1.4 DELIVERY, STORAGE, AND HANDLING

1.4.1 Delivery and Storage

Materials delivered to site shall be inspected for damage, unloaded, and stored with a minimum of handling. Materials shall not be stored directly on the ground. The inside of pipes and fittings shall be kept free of dirt and debris. Before, during, and after installation, plastic pipe and fittings shall be protected from any environment that would result in damage or deterioration to the material. The Contractor shall have a copy of the manufacturer's instructions available at the construction site at all times and shall follow these instructions unless directed otherwise by the Contracting Officer. Solvents, solvent compounds, lubricants, elastomeric gaskets, and any similar materials required to install plastic pipe shall be stored in accordance with the manufacturer's recommendations and shall be discarded if the storage period exceeds the recommended shelf life. Solvents in use shall be discarded when the recommended pot life is exceeded.

1.4.2 Handling

Materials shall be handled in a manner that ensures delivery to the trench in sound, undamaged condition. Pipe shall be carried to the trench, not dragged.

PART 2 PRODUCTS

2.1 PIPE FOR CULVERTS AND STORM DRAINS

Pipe for culverts and storm drains shall be of the sizes indicated and shall conform to the requirements specified.

2.1.1 Concrete Pipe

ASTM C 76, Class III, or ASTM C 655, of equivalent strength.

2.1.1.1 Omitted
2.1.1.2 Omitted

2.1.1.3 Nonreinforced Pipe

ASTM C 14, Class 2.

2.1.1.4 Cast-In-Place Nonreinforced Conduit

ACI 346/346R, except that testing shall be the responsibility of and at the expense of the Contractor. In the case of other conflicts between ACI 346/346R and project specifications, requirements of ACI 346/346R shall govern.

2.1.2 Omitted
2.1.3 Omitted
2.1.4 Omitted
2.1.5 Omitted
2.1.6 Omitted

2.1.6 Ductile Iron Culvert Pipe

ASTM A 716.

2.1.7 PVC Pipe

The pipe manufacturer's resin certification, indicating the cell classification of PVC used to manufacture the pipe, shall be submitted prior to installation of the pipe.

2.1.7.1 Type PSM PVC Pipe

ASTM D 3034, Type PSM, maximum SDR 35, produced from PVC certified by the compounder as meeting the requirements of ASTM D 1784, minimum cell class 12454-B.

2.1.7.2 Profile PVC Pipe

ASTM F 794, Series 46, produced from PVC certified by the compounder as meeting the requirements of ASTM D 1784, minimum cell class 12454-B.

2.1.7.3 Smooth Wall PVC Pipe

ASTM F 679 produced from PVC certified by the compounder as meeting the requirements of ASTM D 1784, minimum cell class 12454-B.

2.1.7.4 Corrugated PVC Pipe

ASTM F 949 produced from PVC certified by the compounder as meeting the requirements of ASTM D 1784, minimum cell class 12454-B.

2.2 DRAINAGE STRUCTURES

2.2.1 Flared End Sections

Sections shall be of a standard design fabricated from zinc coated steel sheets meeting requirements of ASTM A 929/A 929M.

2.2.2 Precast Reinforced Concrete Box

For highway loadings with 2 feet of cover or more or subjected to dead load only, ASTM C 789; for less than 2 feet of cover subjected to highway loading, ASTM C 850.

2.3 MISCELLANEOUS MATERIALS

2.3.1 Concrete

Unless otherwise specified, concrete and reinforced concrete shall conform to the requirements for 3000 psi concrete under Section 03300 CAST-IN-PLACE STRUCTURAL CONCRETE. The concrete mixture shall have air content by volume of concrete, based on measurements made immediately after discharge from the mixer, of 5 to 7 percent when maximum size of coarse aggregate exceeds 1-1/2 inches. Air content shall be determined in accordance with ASTM C 231. The concrete covering over steel reinforcing shall not be less than 1 inch thick for covers and not less than 1-1/2 inches thick for walls and flooring. Concrete covering deposited directly against the ground shall have a thickness of at least 3 inches between steel and ground. Expansion-joint filler material shall conform to ASTM D 1751, or ASTM D 1752, or shall be resin-impregnated fiberboard conforming to the physical requirements of ASTM D 1752.

2.3.2 Mortar

Mortar for pipe joints, connections to other drainage structures, and brick or block construction shall conform to ASTM C 270, Type M, except that the maximum placement time shall be 1 hour. The quantity of water in the mixture shall be sufficient to produce a stiff workable mortar. Water shall be clean and free of harmful acids, alkalies, and organic impurities. The mortar shall be used within 30 minutes after the ingredients are mixed with water. The inside of the joint shall be wiped clean and finished smooth. The mortar head on the outside shall be protected from air and sun with a proper covering until satisfactorily cured.

2.3.3 Precast Concrete Segmental Blocks

Precast concrete segmental block shall conform to ASTM C 139, not more than 8 inches thick, not less than 8 inches long, and of such shape that joints can be sealed effectively and bonded with cement mortar.

2.3.4 Brick

Brick shall conform to ASTM C 62, Grade SW; ASTM C 55, Grade S-I or S-II; or ASTM C 32, Grade MS. Mortar for jointing and plastering shall consist of one part portland cement and two parts fine sand. Lime may be added to the mortar in a quantity not more than 25 percent of the volume of cement. The joints shall be filled completely and shall be smooth and free from surplus mortar on the inside of the structure. Brick structures shall be plastered with 1/2 inch of mortar over the entire outside surface of the walls. For square or rectangular structures, brick shall be laid in stretcher courses with a header course every sixth course. For round structures, brick shall be laid radially with every sixth course a stretcher course.

2.3.5 Precast Reinforced Concrete Manholes

Precast reinforced concrete manholes shall conform to ASTM C 478. Joints

between precast concrete risers and tops shall be full-bedded in cement mortar and shall be smoothed to a uniform surface on both interior and exterior of the structure or made with flexible watertight, rubber-type gaskets meeting the requirements of paragraph JOINTS.

2.3.6 Prefabricated Corrugated Metal Manholes

Manholes shall be of the type and design recommended by the manufacturer. Manholes shall be complete with frames and cover, or frames and gratings.

2.3.7 Frame and Cover for Gratings

Frame and cover for gratings shall be cast gray iron, ASTM A 48, Class 35B; cast ductile iron, ASTM A 536, Grade 65-45-12; or cast aluminum, ASTM B 26/B 26M, Alloy 356.OT6. Weight, shape, size, and waterway openings for grates and curb inlets shall be as indicated on the plans.

2.3.8 Joints

2.3.8.1 Flexible Watertight Joints

a. Materials: Flexible watertight joints shall be made with plastic or rubber-type gaskets for concrete pipe and with factory-fabricated resilient materials for clay pipe. The design of joints and the physical requirements for plastic gaskets shall conform to AASHTO M 198, and rubber-type gaskets shall conform to ASTM C 443. Factory-fabricated resilient joint materials shall conform to ASTM C 425. Gaskets shall have not more than one factory-fabricated splice, except that two factory-fabricated splices of the rubber-type gasket are permitted if the nominal diameter of the pipe being gasketed exceeds 54 inches.

b. Test Requirements: Watertight joints shall be tested and shall meet test requirements of paragraph HYDROSTATIC TEST ON WATERTIGHT JOINTS. Rubber gaskets shall comply with the oil resistant gasket requirements of ASTM C 443. Certified copies of test results shall be delivered to the Contracting Officer before gaskets or jointing materials are installed. Alternate types of watertight joint may be furnished, if specifically approved.

2.3.8.2 External Sealing Bands

Requirements for external sealing bands shall conform to ASTM C 877.

2.3.8.3 Flexible Watertight, Gasketed Joints

a. Gaskets: When infiltration or exfiltration is a concern for pipe lines, the couplings may be required to have gaskets. The closed-cell expanded rubber gaskets shall be a continuous band approximately 7 inches wide and approximately 3/8 inch thick, meeting the requirements of ASTM D 1056, Type 2 A1, and shall have a quality retention rating of not less than 70 percent when tested for weather resistance by ozone chamber exposure, Method B of ASTM D 1171. Rubber O-ring gaskets shall be 13/16 inch in diameter for pipe diameters of 36 inches or smaller and 7/8 inch in diameter for larger pipe having 1/2 inch deep end corrugation. Rubber O-ring gaskets shall be 1-3/8 inches in diameter for pipe having 1 inch deep end corrugations. O-rings shall meet the requirements of AASHTO M 198 or ASTM C 443. Flexible plastic gaskets shall

conform to requirements of AASHTO M 198, Type B.

b. Connecting Bands: Connecting bands shall be of the type, size and sheet thickness of band, and the size of angles, bolts, rods and lugs as indicated or where not indicated as specified in the applicable standards or specifications for the pipe. Exterior rivet heads in the longitudinal seam under the connecting band shall be countersunk or the rivets shall be omitted and the seam welded. Watertight joints shall be tested and shall meet the test requirements of paragraph HYDROSTATIC TEST ON WATERTIGHT JOINTS.

2.3.8.4 PVC Plastic Pipes

Joints shall be solvent cement or elastomeric gasket type in accordance with the specification for the pipe and as recommended by the pipe manufacturer.

2.3.8.5 Smooth Wall PE Plastic Pipe

Pipe shall be joined using butt fusion method as recommended by the pipe manufacturer.

2.3.8.6 Corrugated PE Plastic Pipe

Water tight joints shall be made using a PVC or PE coupling and rubber gaskets as recommended by the pipe manufacturer. Rubber gaskets shall conform to ASTM F 477. Soil tight joints shall conform to the requirements in AASHTO HB-16, Division II, Section 26.4.2.4. (e) for soil tightness and shall be as recommended by the pipe manufacturer.

2.3.8.7 Profile Wall PE Plastic Pipe

Joints shall be gasketed or thermal weld type with integral bell in accordance with ASTM F 894.

2.3.8.8 Ductile Iron Pipe

Couplings and fittings shall be as recommended by the pipe manufacturer.

2.4 STEEL LADDER

Steel ladder shall be provided where the depth of the manhole exceeds 12 feet. These ladders shall be not less than 16 inches in width, with 3/4 inch diameter rungs spaced 12 inches apart. The two stringers shall be a minimum 3/8 inch thick and 2-1/2 inches wide. Ladders and inserts shall be galvanized after fabrication in conformance with ASTM A 123/A 123M.

2.5 DOWNSPOUT BOOTS

Boots used to connect exterior downspouts to the storm-drainage system shall be of gray cast iron conforming to ASTM A 48, Class 30B or 35B. Shape and size shall be as indicated.

2.6 RESILIENT CONNECTORS

Flexible, watertight connectors used for connecting pipe to manholes and inlets shall conform to ASTM C 923.

PART 3 EXECUTION

3.1 EXCAVATION FOR PIPE CULVERTS, STORM DRAINS, AND DRAINAGE STRUCTURES

Excavation of trenches, and for appurtenances and backfilling for culverts and storm drains, shall be in accordance with the applicable portions of Section 02316A "Excavation, Trenching, and Backfilling for Utilities Systems"d and the requirements specified below.

3.1.1 Trenching

The width of trenches at any point below the top of the pipe shall be not greater than the outside diameter of the pipe plus 8 inches to permit satisfactory jointing and thorough tamping of the bedding material under and around the pipe. Sheeting and bracing, where required, shall be placed within the trench width as specified. Contractor shall not overexcavate. Where trench widths are exceeded, redesign with a resultant increase in cost of stronger pipe or special installation procedures will be necessary. Cost of this redesign and increased cost of pipe or installation shall be borne by the Contractor without additional cost to the Government.

3.1.2 Removal of Rock

Rock in either ledge or boulder formation shall be replaced with suitable materials to provide a compacted earth cushion having a thickness between unremoved rock and the pipe of at least 8 inches or 1/2 inch for each foot of fill over the top of the pipe, whichever is greater, but not more than three-fourths the nominal diameter of the pipe. Where bell-and-spigot pipe is used, the cushion shall be maintained under the bell as well as under the straight portion of the pipe. Rock excavation shall be as specified and defined in Section 02316A "Excavation, Trenching, and Backfilling for Utilities Systems".

3.1.3 Removal of Unstable Material

Where wet or otherwise unstable soil incapable of properly supporting the pipe, as determined by the Contracting Officer, is unexpectedly encountered in the bottom of a trench, such material shall be removed to the depth required and replaced to the proper grade with select granular material, compacted as provided in paragraph BACKFILLING. When removal of unstable material is due to the fault or neglect of the Contractor in his performance of shoring and sheeting, water removal, or other specified requirements, such removal and replacement shall be performed at no additional cost to the government.

3.2 BEDDING

The bedding surface for the pipe shall provide a firm foundation of uniform density throughout the entire length of the pipe.

3.2.1 Concrete Pipe Requirements

When no bedding class is specified or detailed on the drawings, concrete pipe shall be bedded in a soil foundation accurately shaped and rounded to conform to the lowest one-fourth of the outside portion of circular pipe or to the lower curved portion of pipe arch for the entire length of the pipe or pipe arch. When necessary, the bedding shall be tamped. Bell holes and depressions for joints shall be not more than the length, depth, and width required for properly making the particular type of joint.

3.2.2 Clay Pipe Requirements

Bedding for clay pipe shall be as specified by ASTM C 12.

3.2.3 Omitted

3.2.4 Ductile Iron Pipe

Bedding for ductile iron pipe shall be as shown on the drawings.

3.2.5 Plastic Pipe

Bedding for PVC and PE pipe shall meet the requirements of ASTM D 2321. Bedding, haunching, and initial backfill shall be either Class IB or II material.

3.3 PLACING PIPE

Each pipe shall be thoroughly examined before being laid; defective or damaged pipe shall not be used. Plastic pipe shall be protected from exposure to direct sunlight prior to laying, if necessary to maintain adequate pipe stiffness and meet installation deflection requirements. Pipelines shall be laid to the grades and alignment indicated. Proper facilities shall be provided for lowering sections of pipe into trenches. Lifting lugs in vertically elongated metal pipe shall be placed in the same vertical plane as the major axis of the pipe. Pipe shall not be laid in water, and pipe shall not be laid when trench conditions or weather are unsuitable for such work. Diversion of drainage or dewatering of trenches during construction shall be provided as necessary. Deflection of installed flexible pipe shall not exceed the following limits:

TYPE OF PIPE	MAXIMUM ALLOWABLE DEFLECTION (%)
Concrete-Lined Corrugated Steel	3
Ductile Iron Culvert	3
Plastic	7.5

Not less than 30 days after the completion of backfilling, the Government may perform a deflection test on the entire length of installed flexible pipe using a mandrel or other suitable device. Installed flexible pipe showing deflections greater than those indicated above shall be retested by a run from the opposite direction. If the retest also fails, the suspect pipe shall be replaced at no cost to the Government.

3.3.1 Concrete, Clay, PVC, Ribbed PVC and Ductile Iron Pipe

Laying shall proceed upgrade with spigot ends of bell-and-spigot pipe and tongue ends of tongue-and-groove pipe pointing in the direction of the flow.

3.3.2 Elliptical and Elliptical Reinforced Concrete Pipe

The manufacturer's reference lines, designating the top of the pipe, shall be within 5 degrees of a vertical plane through the longitudinal axis of

the pipe, during placement. Damage to or misalignment of the pipe shall be prevented in all backfilling operations.

3.3.3 Corrugated PE Pipe

Laying shall be with the separate sections joined firmly on a bed shaped to line and grade and shall follow manufacturer's recommendations.

3.3.4 Omitted
3.3.5 Omitted
3.3.6 Omitted

3.3.7 Multiple Culverts

Where multiple lines of pipe are installed, adjacent sides of pipe shall be at least half the nominal pipe diameter or 3 feet apart, whichever is less.

3.3.8 Jacking Pipe Through Fills

Methods of operation and installation for jacking pipe through fills shall conform to requirements specified in Volume 1, Chapter 1, Part 4 of AREMA Manual.

3.4 JOINTING

3.4.1 Concrete and Clay Pipe

3.4.1.1 Cement-Mortar Bell-and-Spigot Joint

The first pipe shall be bedded to the established gradeline, with the bell end placed upstream. The interior surface of the bell shall be thoroughly cleaned with a wet brush and the lower portion of the bell filled with mortar as required to bring inner surfaces of abutting pipes flush and even. The spigot end of each subsequent pipe shall be cleaned with a wet brush and uniformly matched into a bell so that sections are closely fitted. After each section is laid, the remainder of the joint shall be filled with mortar, and a bead shall be formed around the outside of the joint with sufficient additional mortar. If mortar is not sufficiently stiff to prevent appreciable slump before setting, the outside of the joint shall be wrapped or bandaged with cheesecloth to hold mortar in place.

3.4.1.2 Cement-Mortar Oakum Joint for Bell-and-Spigot Pipe

A closely twisted gasket shall be made of jute or oakum of the diameter required to support the spigot end of the pipe at the proper grade and to make the joint concentric. Joint packing shall be in one piece of sufficient length to pass around the pipe and lap at top. This gasket shall be thoroughly saturated with neat cement grout. The bell of the pipe shall be thoroughly cleaned with a wet brush, and the gasket shall be laid in the bell for the lower third of the circumference and covered with mortar. The spigot of the pipe shall be thoroughly cleaned with a wet brush, inserted in the bell, and carefully driven home. A small amount of mortar shall be inserted in the annular space for the upper two-thirds of the circumference. The gasket shall be lapped at the top of the pipe and driven home in the annular space with a caulking tool. The remainder of the annular space shall be filled completely with mortar and beveled at an angle of approximately 45 degrees with the outside of the bell. If mortar is not sufficiently stiff to prevent appreciable slump before setting, the outside of the joint thus made shall be wrapped with cheesecloth. Placing

of this type of joint shall be kept at least five joints behind laying operations.

3.4.1.3 Cement-Mortar Diaper Joint for Bell-and-Spigot Pipe

The pipe shall be centered so that the annular space is uniform. The annular space shall be caulked with jute or oakum. Before caulking, the inside of the bell and the outside of the spigot shall be cleaned.

a. Diaper Bands: Diaper bands shall consist of heavy cloth fabric to hold grout in place at joints and shall be cut in lengths that extend one-eighth of the circumference of pipe above the spring line on one side of the pipe and up to the spring line on the other side of the pipe. Longitudinal edges of fabric bands shall be rolled and stitched around two pieces of wire. Width of fabric bands shall be such that after fabric has been securely stitched around both edges on wires, the wires will be uniformly spaced not less than 8 inches apart. Wires shall be cut into lengths to pass around pipe with sufficient extra length for the ends to be twisted at top of pipe to hold the band securely in place; bands shall be accurately centered around lower portion of joint.

b. Grout: Grout shall be poured between band and pipe from the high side of band only, until grout rises to the top of band at the spring line of pipe, or as nearly so as possible, on the opposite side of pipe, to ensure a thorough sealing of joint around the portion of pipe covered by the band. Silt, slush, water, or polluted mortar grout forced up on the lower side shall be forced out by pouring, and removed.

c. Remainder of Joint: The remaining unfilled upper portion of the joint shall be filled with mortar and a bead formed around the outside of this upper portion of the joint with a sufficient amount of additional mortar. The diaper shall be left in place. Placing of this type of joint shall be kept at least five joints behind actual laying of pipe. No backfilling around joints shall be done until joints have been fully inspected and approved.

3.4.1.4 Cement-Mortar Tongue-and-Groove Joint

The first pipe shall be bedded carefully to the established gradeline with the groove upstream. A shallow excavation shall be made underneath the pipe at the joint and filled with mortar to provide a bed for the pipe. The grooved end of the first pipe shall be thoroughly cleaned with a wet brush, and a layer of soft mortar applied to the lower half of the groove. The tongue of the second pipe shall be cleaned with a wet brush; while in horizontal position, a layer of soft mortar shall be applied to the upper half of the tongue. The tongue end of the second pipe shall be inserted in the grooved end of the first pipe until mortar is squeezed out on interior and exterior surfaces. Sufficient mortar shall be used to fill the joint completely and to form a bead on the outside.

3.4.1.5 Cement-Mortar Diaper Joint for Tongue-and-Groove Pipe

The joint shall be of the type described for cement-mortar tongue-and-groove joint in this paragraph, except that the shallow excavation directly beneath the joint shall not be filled with mortar until after a gauze or cheesecloth band dipped in cement mortar has been wrapped around the outside of the joint. The cement-mortar bead at the joint shall

be at least 1/2 inch, thick and the width of the diaper band shall be at least 8 inches. The diaper shall be left in place. Placing of this type of joint shall be kept at least five joints behind the actual laying of the pipe. Backfilling around the joints shall not be done until the joints have been fully inspected and approved.

3.4.1.6 Plastic Sealing Compound Joints for Tongue-and-Grooved Pipe

Sealing compounds shall follow the recommendation of the particular manufacturer in regard to special installation requirements. Surfaces to receive lubricants, primers, or adhesives shall be dry and clean. Sealing compounds shall be affixed to the pipe not more than 3 hours prior to installation of the pipe, and shall be protected from the sun, blowing dust, and other deleterious agents at all times. Sealing compounds shall be inspected before installation of the pipe, and any loose or improperly affixed sealing compound shall be removed and replaced. The pipe shall be aligned with the previously installed pipe, and the joint pulled together. If, while making the joint with mastic-type sealant, a slight protrusion of the material is not visible along the entire inner and outer circumference of the joint when the joint is pulled up, the pipe shall be removed and the joint remade. After the joint is made, all inner protrusions shall be cut off flush with the inner surface of the pipe. If nonmastic-type sealant material is used, the "Squeeze-Out" requirement above will be waived.

3.4.1.7 Flexible Watertight Joints

Gaskets and jointing materials shall be as recommended by the particular manufacturer in regard to use of lubricants, cements, adhesives, and other special installation requirements. Surfaces to receive lubricants, cements, or adhesives shall be clean and dry. Gaskets and jointing materials shall be affixed to the pipe not more than 24 hours prior to the installation of the pipe, and shall be protected from the sun, blowing dust, and other deleterious agents at all times. Gaskets and jointing materials shall be inspected before installing the pipe; any loose or improperly affixed gaskets and jointing materials shall be removed and replaced. The pipe shall be aligned with the previously installed pipe, and the joint pushed home. If, while the joint is being made the gasket becomes visibly dislocated the pipe shall be removed and the joint remade.

3.4.1.8 External Sealing Band Joint for Noncircular Pipe

Surfaces to receive sealing bands shall be dry and clean. Bands shall be installed in accordance with manufacturer's recommendations.

3.5 DRAINAGE STRUCTURES

3.5.1 Manholes and Inlets

Construction shall be of reinforced concrete, plain concrete, brick, precast reinforced concrete, precast concrete segmental blocks, prefabricated corrugated metal, or bituminous coated corrugated metal; complete with frames and covers or gratings; and with fixed galvanized steel ladders where indicated. Pipe studs and junction chambers of prefabricated corrugated metal manholes shall be fully bituminous-coated and paved when the connecting branch lines are so treated. Pipe connections to concrete manholes and inlets shall be made with flexible, watertight connectors.

3.5.2 Walls and Headwalls

Construction shall be as indicated.

3.6 STEEL LADDER INSTALLATION

Ladder shall be adequately anchored to the wall by means of steel inserts spaced not more than 6 feet vertically, and shall be installed to provide at least 6 inches of space between the wall and the rungs. The wall along the line of the ladder shall be vertical for its entire length.

3.7 BACKFILLING

3.7.1 Backfilling Pipe in Trenches

After the pipe has been properly bedded, selected material from excavation or borrow, at a moisture content that will facilitate compaction, shall be placed along both sides of pipe in layers not exceeding 6 inches in compacted depth. The backfill shall be brought up evenly on both sides of pipe for the full length of pipe. The fill shall be thoroughly compacted under the haunches of the pipe. Each layer shall be thoroughly compacted with mechanical tampers or rammers. This method of filling and compacting shall continue until the fill has reached an elevation of at least 12 inches above the top of the pipe. The remainder of the trench shall be backfilled and compacted by spreading and rolling or compacted by mechanical rammers or tampers in layers not exceeding 8 inches. Tests for density shall be made as necessary to ensure conformance to the compaction requirements specified below. Where it is necessary, in the opinion of the Contracting Officer, that sheeting or portions of bracing used be left in place, the contract will be adjusted accordingly. Untreated sheeting shall not be left in place beneath structures or pavements.

3.7.2 Backfilling Pipe in Fill Sections

For pipe placed in fill sections, backfill material and the placement and compaction procedures shall be as specified below. The fill material shall be uniformly spread in layers longitudinally on both sides of the pipe, not exceeding 6 inches in compacted depth, and shall be compacted by rolling parallel with pipe or by mechanical tamping or ramming. Prior to commencing normal filling operations, the crown width of the fill at a height of 12 inches above the top of the pipe shall extend a distance of not less than twice the outside pipe diameter on each side of the pipe or 12 feet, whichever is less. After the backfill has reached at least 12 inches above the top of the pipe, the remainder of the fill shall be placed and thoroughly compacted in layers not exceeding 8 inches.

3.7.3 Movement of Construction Machinery

When compacting by rolling or operating heavy equipment parallel with the pipe, displacement of or injury to the pipe shall be avoided. Movement of construction machinery over a culvert or storm drain at any stage of construction shall be at the Contractor's risk. Any damaged pipe shall be repaired or replaced.

3.7.4 Compaction

3.7.4.1 General Requirements

Cohesionless materials include gravels, gravel-sand mixtures, sands, and

gravelly sands. Cohesive materials include clayey and silty gravels, gravel-silt mixtures, clayey and silty sands, sand-clay mixtures, clays, silts, and very fine sands. When results of compaction tests for moisture-density relations are recorded on graphs, cohesionless soils will show straight lines or reverse-shaped moisture-density curves, and cohesive soils will show normal moisture-density curves.

3.7.4.2 Minimum Density

Backfill over and around the pipe and backfill around and adjacent to drainage structures shall be compacted at the approved moisture content to the following applicable minimum density, which will be determined as specified below.

a. Under airfield and heliport pavements, paved roads, streets, parking areas, and similar-use pavements including adjacent shoulder areas, the density shall be not less than 90 percent of maximum density for cohesive material and 95 percent of maximum density for cohesionless material, up to the elevation where requirements for pavement subgrade materials and compaction shall control.

b. Under unpaved or turfed traffic areas, density shall not be less than 90 percent of maximum density for cohesive material and 95 percent of maximum density for cohesionless material.

c. Under nontraffic areas, density shall be not less than that of the surrounding material.

3.7.5 Determination of Density

Testing shall be the responsibility of the Contractor and performed at no additional cost to the Government. Testing shall be performed by an approved commercial testing laboratory or by the Contractor subject to approval. Tests shall be performed in sufficient number to ensure that specified density is being obtained. Laboratory tests for moisture-density relations shall be made in accordance with ASTM D 1557 except that mechanical tampers may be used provided the results are correlated with those obtained with the specified hand tamper. Field density tests shall be determined in accordance with ASTM D 2167 or ASTM D 2922. When ASTM D 2922 is used, the calibration curves shall be checked and adjusted, if necessary, using the sand cone method as described in paragraph Calibration of the referenced publications. ASTM D 2922 results in a wet unit weight of soil and when using this method ASTM D 3017 shall be used to determine the moisture content of the soil. The calibration curves furnished with the moisture gauges shall be checked along with density calibration checks as described in ASTM D 3017 or ASTM D 2922. Test results shall be furnished the Contracting Officer. The calibration checks of both the density and moisture gauges shall be made at the beginning of a job on each different type of material encountered and at intervals as directed.

-- End of Section --

SECTION TABLE OF CONTENTS

DIVISION 02 - SITE CONSTRUCTION

SECTION 02763A

PAVEMENT MARKINGS

04/01

PART 1 GENERAL

1.1 REFERENCES
1.2 OMITTED
1.3 SUBMITTALS
1.4 DELIVERY AND STORAGE
1.5 EQUIPMENT
1.5.1 Paint Application Equipment
1.5.2 Thermoplastic Application Equipment
1.5.2.1 Thermoplastic Material
1.5.2.2 Application Equipment
1.5.2.3 Mobile and Maneuverable
1.5.3 Reflective Media Dispenser
1.5.4 Preformed Tape Application Equipment
1.5.5 Surface Preparation Equipment
1.5.5.1 Sandblasting Equipment
1.5.5.2 Waterblast Equipment
1.5.6 Marking Removal Equipment
1.5.6.1 Shotblasting Equipment
1.5.6.2 Chemical Equipment
1.5.7 Traffic Controls
1.6 HAND-OPERATED, PUSH-TYPE MACHINES
1.7 MAINTENANCE OF TRAFFIC
1.7.1 Omitted
1.7.2 Roads, Streets, and Parking Areas
1.8 WEATHER LIMITATIONS FOR REMOVAL

PART 2 PRODUCTS

2.1 PAINT
2.2 THERMOPLASTIC COMPOUNDS
2.2.1 Composition Requirements
2.2.2 Physical Properties
2.2.2.1 Color
2.2.2.2 Drying Time
2.2.2.3 Softening Point
2.2.2.4 Specific Gravity
2.2.3 Asphalt Concrete Primer
2.2.4 Portland Cement Concrete Primer
2.3 PREFORMED TAPE
2.4 RAISED REFLECTIVE MARKERS
2.5 REFLECTIVE MEDIA
2.6 SAMPLING AND TESTING

PART 3 EXECUTION

3.1 SURFACE PREPARATION
3.1.1 Pretreatment for Early Painting

3.1.2 Cleaning Existing Pavement Markings
3.1.3 Cleaning Concrete Curing Compounds
3.2 APPLICATION
3.2.1 Paint
3.2.1.1 Rate of Application
3.2.1.2 Drying
3.2.2 Thermoplastic Compounds
3.2.2.1 Longitudinal Markings
3.2.2.2 Primer
3.2.2.3 Markings
3.2.3 Preformed Tape
3.2.4 Raised Reflective Markers
3.2.5 Reflective Media
3.3 MARKING REMOVAL
3.3.1 Equipment Operation
3.3.2 Cleanup and Waste Disposal

-- End of Section Table of Contents --

UFGS-02763A (April 2001)

SECTION 02763A

PAVEMENT MARKINGS
04/01

PART 1 GENERAL

1.1 REFERENCES

The publications listed below form a part of this specification to the extent referenced. The publications are referred to in the text by basic designation only.

AMERICAN ASSOCIATION OF STATE HIGHWAY AND TRANSPORTATION OFFICIALS (AASHTO)

AASHTO M 247	(1981; R 1996) Glass Beads Used in Traffic Paint

AMERICAN SOCIETY FOR TESTING AND MATERIALS (ASTM)

ASTM D 792	(1998) Density and Specific Gravity (Relative Density) of Plastics by Displacement
ASTM D 4280	(1996) Extended Life Type, Nonplowable, Prismatic, Raised, Retroreflective Pavement Markers
ASTM D 4505	(1996) Preformed Plastic Pavement Marking Tape for Extended Service Life
ASTM E 28	(1999) Softening Point of Resins by Ring and Ball Apparatus

U.S. GENERAL SERVICES ADMINISTRATION (GSA)

FS TT-B-1325	(Rev C; Notice 1; Canc. Notice 2) Beads (Glass Spheres) Retro-Reflective (Metric)
FS TT-P-1952	(Rev D; Canc. Notice 1) Paint, Traffic and Airfield Marking, Waterborne (Metric)

1.2 OMITTED

1.3 SUBMITTALS

Government approval is required for submittals with a "G" designation; submittals not having a "G" designation are for information only. When used, a designation following the "G" designation identifies the office that will review the submittal for the Government. The following shall be submitted in accordance with Section 01330 SUBMITTAL PROCEDURES:

SD-03 Product Data

Equipment; G

Lists of proposed equipment, including descriptive data, and notifications of proposed Contractor actions as specified in this section. List of removal equipment shall include descriptive data indicating area of coverage per pass, pressure adjustment range, tank and flow capacities, and safety precautions required for the equipment operation.

Composition Requirements

Manufacturer's current printed product description and Material Safety Data Sheets (MSDS) for each type paint/color proposed for use.

Qualifications

Document certifying that personnel are qualified for equipment operation and handling of chemicals.

SD-07 Certificates

Volatile Organic Compound (VOC)

Certificate stating that the proposed pavement marking paint meets the VOC regulations of the local Air Pollution Control District having jurisdiction over the geographical area in which the project is located.

1.4 DELIVERY AND STORAGE

All materials shall be delivered and stored in sealed containers that plainly show the designated name, formula or specification number, batch number, color, date of manufacture, manufacturer's name, and directions, all of which shall be plainly legible at time of use.

1.5 EQUIPMENT

All machines, tools and equipment used in the performance of the work shall be approved and maintained in satisfactory operating condition. Equipment operating on roads and runways shall display low speed traffic markings and traffic warning lights.

1.5.1 Paint Application Equipment

The equipment to apply paint to pavements shall be a self-propelled or mobile-drawn pneumatic spraying machine with suitable arrangements of atomizing nozzles and controls to obtain the specified results. The machine shall have a speed during application not less than 5 mph, and shall be capable of applying the stripe widths indicated, at the paint coverage rate specified in paragraph APPLICATION, and of even uniform thickness with clear-cut edges. Equipment used for marking streets and highways shall be capable of placing the prescribed number of lines at a single pass as solid lines, intermittent lines or a combination of solid and intermittent lines using a maximum of two different colors of paint as specified. . The paint applicator shall have paint reservoirs or tanks of sufficient capacity and suitable gauges to apply paint in accordance with requirements specified. Tanks shall be equipped with suitable air-driven

mechanical agitators. The spray mechanism shall be equipped with quick-action valves conveniently located, and shall include necessary pressure regulators and gauges in full view and reach of the operator. Paint strainers shall be installed in paint supply lines to ensure freedom from residue and foreign matter that may cause malfunction of the spray guns. The paint applicator shall be readily adaptable for attachment of an air-actuated dispenser for the reflective media approved for use. Pneumatic spray guns shall be provided for hand application of paint in areas where the mobile paint applicator cannot be used.

1.5.2 Thermoplastic Application Equipment

1.5.2.1 Thermoplastic Material

Thermoplastic material shall be applied to the primed pavement surface by spray techniques or by the extrusion method, wherein one side of the shaping die is the pavement and the other three sides are contained by, or are part of, suitable equipment for heating and controlling the flow of material. By either method, the markings shall be applied with equipment that is capable of providing continuous uniformity in the dimensions of the stripe.

1.5.2.2 Application Equipment

a. Application equipment shall provide continuous mixing and agitation of the material. Conveying parts of the equipment between the main material reservoir and the extrusion shoe or spray gun shall prevent accumulation and clogging. All parts of the equipment which come into contact with the material shall be easily accessible and exposable for cleaning and maintenance. All mixing and conveying parts up to and including the extrusion shoes and spray guns shall maintain the material at the required temperature with heat-transfer oil or electrical-element-controlled heat.

b. The application equipment shall be constructed to ensure continuous uniformity in the dimensions of the stripe. The applicator shall provide a means for cleanly cutting off stripe ends squarely and shall provide a method of applying "skiplines". The equipment shall be capable of applying varying widths of traffic markings.

c. The applicator shall be equipped with a drop-on type bead dispenser capable of uniformly dispensing reflective glass spheres at controlled rates of flow. The bead dispenser shall be automatically operated and shall begin flow prior to the flow of composition to assure that the strip is fully reflectorized.

1.5.2.3 Mobile and Maneuverable

Application equipment shall be mobile and maneuverable to the extent that straight lines can be followed and normal curves can be made in a true arc. The equipment used for the placement of thermoplastic pavement markings shall be of two general types: mobile applicator and portable applicator.

a. Mobile Application Equipment: The mobile applicator shall be defined as a truck-mounted, self-contained pavement marking machine that is capable of hot applying thermoplastic by either the extrusion or spray method. The unit shall be equipped to apply the thermoplastic marking material at temperatures exceeding 375 degrees F, at widths varying from 3 to 12 inches and in thicknesses varying from 0.020 to 0.190 inch and shall

have an automatic drop-on bead system. The mobile unit shall be capable of operating continuously and of installing a minimum of 20,000 lineal feet of longitudinal markings in an 8-hour day.

(1) The mobile unit shall be equipped with a melting kettle which holds a minimum of 6000 pounds of molten thermoplastic material. The kettle shall be capable of heating the thermoplastic composition to temperatures of 375 to 425 degrees F. A thermostatically controlled heat transfer liquid shall be used. Heating of the composition by direct flame will not be allowed. Oil and material temperature gauges shall be visible at both ends of the kettle.

(2) The mobile unit shall be equipped with an electronic programmable line pattern control system. The control system shall be capable of applying skip or solid lines in any sequence, through any and all of the extrusion shoes, or the spray guns, and in programmable cycle lengths. In addition, the mobile unit shall be equipped with an automatic counting mechanism capable of recording the number of lineal feet of thermoplastic markings applied to the pavement surface with an accuracy of 0.5 percent.

b. Portable Application Equipment: The portable applicator shall be defined as hand-operated equipment, specifically designed for placing special markings such as crosswalks, stopbars, legends, arrows, and short lengths of lane, edge and centerlines. The portable applicator shall be capable of applying thermoplastic pavement markings by the extrusion method. The portable applicator shall be loaded with hot thermoplastic composition from the melting kettles on the mobile applicator. The portable applicator shall be equipped with all the necessary components, including a materials storage reservoir, bead dispenser, extrusion shoe, and heating accessories, so as to be capable of holding the molten thermoplastic at a temperature of 375 to 425 degrees F, of extruding a line of 3 to 12 inches in width, and in thicknesses of not less than 0.125 inch nor more than 0.190 inch and of generally uniform cross section.

1.5.3 Reflective Media Dispenser

The dispenser for applying the reflective media shall be attached to the paint dispenser and shall operate automatically and simultaneously with the applicator through the same control mechanism. The dispenser shall be capable of adjustment and designed to provide uniform flow of reflective media over the full length and width of the stripe at the rate of coverage specified in paragraph APPLICATION, at all operating speeds of the applicator to which it is attached.

1.5.4 Preformed Tape Application Equipment

Mechanical application equipment shall be used for the placement of preformed marking tape. Mechanical application equipment shall be defined as a mobile pavement marking machine specifically designed for use in applying precoated, pressure-sensitive pavement marking tape of varying widths, up to 12 inches. The applicator shall be equipped with rollers, or other suitable compactive device, to provide initial adhesion of the preformed, pressure-sensitive marking tape with the pavement surface. Additional hand-operated rollers shall be used as required to properly seat the thermoplastic tape.

1.5.5 Surface Preparation Equipment

1.5.5.1 Sandblasting Equipment

Sandblasting equipment shall include an air compressor, hoses, and nozzles of proper size and capacity as required for cleaning surfaces to be painted. The compressor shall be capable of furnishing not less than 150 cfm of air at a pressure of not less than 90 psi at each nozzle used, and shall be equipped with traps that will maintain the compressed air free of oil and water.

1.5.5.2 Waterblast Equipment

The water pressure shall be specified at 2600 psi at 140 degrees F in order to adequately clean the surfaces to be marked.

1.5.6 Marking Removal Equipment

Equipment shall be mounted on rubber tires and shall be capable of removing markings from the pavement without damaging the pavement surface or joint sealant. Waterblasting equipment shall be capable of producing an adjustable, pressurized stream of water. Sandblasting equipment shall include an air compressor, hoses, and nozzles. The compressor shall be equipped with traps to maintain the air free of oil and water.

1.5.6.1 Shotblasting Equipment

Shotblasting equipment shall be capable of producing an adjustable depth of removal of marking and pavement. Each unit shall be self-cleaning and self-contained, shall be able to confine dust and debris from the operation, and shall be capable of recycling the abrasive for reuse.

1.5.6.2 Chemical Equipment

Chemical equipment shall be capable of application and removal of chemicals from the pavement surface, and shall leave only non-toxic biodegradeable residue.

1.5.7 Traffic Controls

Suitable warning signs shall be placed near the beginning of the worksite and well ahead of the worksite for alerting approaching traffic from both directions. Small markers shall be placed along newly painted lines or freshly placed raised markers to control traffic and prevent damage to newly painted surfaces or displacement of raised pavement markers. Painting equipment shall be marked with large warning signs indicating slow-moving painting equipment in operation.

1.6 HAND-OPERATED, PUSH-TYPE MACHINES

All machines, tools, and equipment used in performance of the work shall be approved and maintained in satisfactory operating condition. Hand-operated push-type machines of a type commonly used for application of paint to pavement surfaces will be acceptable for marking small streets and parking areas. Applicator machine shall be equipped with the necessary paint tanks and spraying nozzles, and shall be capable of applying paint uniformly at coverage specified. Sandblasting equipment shall be provided as required for cleaning surfaces to be painted. Hand-operated spray guns shall be provided for use in areas where push-type machines cannot be used.

1.7 MAINTENANCE OF TRAFFIC

1.7.1 Omitted

1.7.2 Roads, Streets, and Parking Areas

When traffic must be rerouted or controlled to accomplish the work, the necessary warning signs, flagpersons, and related equipment for the safe passage of vehicles shall be provided.

1.8 WEATHER LIMITATIONS FOR REMOVAL

Pavement surface shall be free of snow, ice, or slush. Surface temperature shall be at least 40 degrees F and rising at the beginning of operations, except those involving shot or sand blasting. Operation shall cease during thunderstorms. Operation shall cease during rainfall, except for waterblasting and removal of previously applied chemicals. Waterblasting shall cease where surface water accumulation alters the effectiveness of material removal.

PART 2 PRODUCTS

2.1 PAINT

The paint shall be homogeneous, easily stirred to smooth consistency, and shall show no hard settlement or other objectionable characteristics during a storage period of 6 months. Paints for airfields, roads, and streets shall conform to FS TT-P-1952, color as indicated. Pavement marking paints shall comply with applicable state and local laws enacted to ensure compliance with Federal Clean Air Standards. Paint materials shall conform to the restrictions of the local Air Pollution Control District.

2.2 THERMOPLASTIC COMPOUNDS

The thermoplastic reflectorized pavement marking compound shall be extruded or sprayed in a molten state onto a primed pavement surface. Following a surface application of glass beads and upon cooling to normal pavement temperatures, the marking shall be an adherent reflectorized strip of the specified thickness and width that is capable of resisting deformation by traffic.

2.2.1 Composition Requirements

The binder component shall be formulated as a hydrocarbon resin. The pigment, beads and filler shall be uniformly dispersed in the binder resin. The thermoplastic composition shall be free from all skins, dirt, and foreign objects and shall comply with the following requirements:

	Percent by Weight	
Component	White	Yellow
Binder	17 min.	17 min.
Titanium dioxide	10 min.	-

Component	Percent by Weight White	Percent by Weight Yellow
Glass beads,	20 min.	20 min.
Calcium carbonate & inert fillers	49 max.	*
Yellow pigments	-	*

*Amount and type of yellow pigment, calcium carbonate and inert fillers shall be at the option of the manufacturer, providing the other composition requirements of this specification are met.

2.2.2 Physical Properties

2.2.2.1 Color

The color shall be as indicated.

2.2.2.2 Drying Time

When installed at 70 degrees F and in thicknesses between 1/8 and 3/16 inch, the composition shall be completely solid and shall show no damaging effect from traffic after curing 15 minutes.

2.2.2.3 Softening Point

The composition shall have a softening point of not less than 194 degrees F when tested in accordance with ASTM E 28.

2.2.2.4 Specific Gravity

The specific gravity of the composition shall be between 1.9 and 2.2 as determined in accordance with ASTM D 792.

2.2.3 Asphalt Concrete Primer

The primer for asphalt concrete pavements shall be a thermosetting adhesive with a solids content of pigment reinforced synthetic rubber and synthetic plastic resin dissolved and/or dispersed in a volatile organic compound (VOC). Solids content shall not be less than 10 percent by weight at 70 degrees F and 60 percent relative humidity. A wet film thickness of 0.005 inch plus or minus 0.001 inch, shall dry to a tack-free condition in less than 5 minutes.

2.2.4 Portland Cement Concrete Primer

The primer for Portland cement concrete pavements shall be an epoxy resin primer. The primer shall be of the type recommended by the manufacturer of the thermoplastic composition. Epoxy primers recommended by the manufacturer shall be approved by the Contracting Officer prior to use. Requests for approval shall be accompanied with technical data, instructions for use, and a 1 quart sample of the primer material.

2.3 PREFORMED TAPE

The preformed tape shall be an adherent reflectorized strip in accordance with ASTM D 4505 Type I or IV, Class optional.

2.4 RAISED REFLECTIVE MARKERS

Either metallic or nonmetallic markers of the button or prismatic reflector type may be used. Markers shall be of permanent colors, as specified for pavement marking, and shall retain the color and brightness under the action of traffic. Button markers shall have a diameter of not less than 4 inches, and shall be spaced not more than 40 feet apart on solid longitudinal lines. Broken centerline marker spacings shall be in segments indicated between segments. Markers shall have rounded surfaces presenting a smooth contour to traffic and shall not project more than 3/4 inch above level of pavement. Pavement markers and adhesive epoxy shall conform to ASTM D 4280.

2.5 REFLECTIVE MEDIA

Reflective media for airfields shall conform to FS TT-B-1325, Type I, Gradation A. Reflective media for roads and streets shall conform to FS TT-B-1325, Type I, Gradation A or AASHTO M 247, Type I.

2.6 SAMPLING AND TESTING

Materials proposed for use shall be stored on the project site in sealed and labeled containers, or segregated at source of supply, sufficiently in advance of needs to allow 60 days for testing. Upon notification by the Contractor that the material is at the site or source of supply, a sample shall be taken by random selection from sealed containers by the Contractor in the presence of a representative of the Contracting Officer. Samples shall be clearly identified by designated name, specification number, batch number, manufacturer's formulation number, project contract number, intended use, and quantity involved. Testing shall be performed in an approved independent laboratory. If materials are approved based on reports furnished by the Contractor, samples will be retained by the Government for possible future testing should the material appear defective during or after application.

PART 3 EXECUTION

3.1 SURFACE PREPARATION

Surfaces to be marked shall be thoroughly cleaned before application of the pavement marking material. Dust, dirt, and other granular surface deposits shall be removed by sweeping, blowing with compressed air, rinsing with water or a combination of these methods as required. Rubber deposits, surface laitance, existing paint markings, and other coatings adhering to the pavement shall be completely removed with scrapers, wire brushes, sandblasting, approved chemicals, or mechanical abrasion as directed. Areas of old pavement affected with oil or grease shall be scrubbed with several applications of trisodium phosphate solution or other approved detergent or degreaser, and rinsed thoroughly after each application. After cleaning, oil-soaked areas shall be sealed with cut shellac to prevent bleeding through the new paint. Pavement surfaces shall be allowed to dry, when water is used for cleaning, prior to striping or marking. Surfaces shall be recleaned, when work has been stopped due to rain.

3.1.1 Pretreatment for Early Painting

Where early painting is required on rigid pavements, a pretreatment with an aqueous solution containing 3 percent phosphoric acid and 2 percent zinc chloride shall be applied to prepared pavement areas prior to painting.

3.1.2 Cleaning Existing Pavement Markings

In general, markings shall not be placed over existing pavement marking patterns. Existing pavement markings, which are in good condition but interfere or conflict with the newly applied marking patterns, shall be removed. Deteriorated or obscured markings that are not misleading or confusing or interfere with the adhesion of the new marking material do not require removal. New preformed and thermoplastic pavement markings shall not be applied over existing preformed or thermoplastic markings. Whenever grinding, scraping, sandblasting or other operations are performed the work must be conducted in such a manner that the finished pavement surface is not damaged or left in a pattern that is misleading or confusing. When these operations are completed the pavement surface shall be blown off with compressed air to remove residue and debris resulting from the cleaning work.

3.1.3 Cleaning Concrete Curing Compounds

On new Portland cement concrete pavements, cleaning operations shall not begin until a minimum of 30 days after the placement of concrete. All new concrete pavements shall be cleaned by either sandblasting or water blasting. When water blasting is performed, thermoplastic and preformed markings shall be applied no sooner than 24 hours after the blasting has been completed. The extent of the blasting work shall be to clean and prepare the concrete surface as follows:

a. There is no visible evidence of curing compound on the peaks of the textured concrete surface.

b. There are no heavy puddled deposits of curing compound in the valleys of the textured concrete surface.

c. All remaining curing compound is intact; all loose and flaking material is removed.

d. The peaks of the textured pavement surface are rounded in profile and free of sharp edges and irregularities.

e. The surface to be marked is dry.

3.2 APPLICATION

All pavement markings and patterns shall be placed as shown on the plans.

3.2.1 Paint

Paint shall be applied to clean, dry surfaces, and only when air and pavement temperatures are above 40 degrees F and less than 95 degrees F. Paint temperature shall be maintained within these same limits. New asphalt pavement surfaces and new Portland concrete cement shall be allowed to cure for a period of not less than 30 days before applications of paint. Paint shall be applied pneumatically with approved equipment at rate of coverage specified . The Contractor shall provide guide lines and

templates as necessary to control paint application. Special precautions shall be taken in marking numbers, letters, and symbols. Edges of markings shall be sharply outlined.

3.2.1.1 Rate of Application

a. Reflective Markings: Pigmented binder shall be applied evenly to the pavement area to be coated at a rate of 105 plus or minus 5 square feet per gallon. Glass spheres shall be applied uniformly to the wet paint on road and street pavement at a rate of 6 plus or minus 0.5 pounds of glass spheres per gallon of paint.

b. Nonreflective Markings: Paint shall be applied evenly to the pavement surface to be coated at a rate of 105 plus or minus 5 square feet per gallon.

3.2.1.2 Drying

The maximum drying time requirements of the paint specifications will be strictly enforced to prevent undue softening of bitumen, and pickup, displacement, or discoloration by tires of traffic. If there is a delay in drying of the markings, painting operations shall be discontinued until cause of the slow drying is determined and corrected.

3.2.2 Thermoplastic Compounds

Thermoplastic pavement markings shall be placed upon dry pavement; surface dry only will not be considered an acceptable condition. At the time of installation, the pavement surface temperature shall be a minimum of 40 degrees F and rising. Thermoplastics, as placed, shall be free from dirt or tint.

3.2.2.1 Longitudinal Markings

All centerline, skipline, edgeline, and other longitudinal type markings shall be applied with a mobile applicator. All special markings, crosswalks, stop bars, legends, arrows, and similar patterns shall be placed with a portable applicator, using the extrusion method.

3.2.2.2 Primer

After surface preparation has been completed the asphalt and/or concrete pavement surface shall be primed. The primer shall be applied with spray equipment. Primer materials shall be allowed to "set-up" prior to applying the thermoplastic composition. The asphalt concrete primer shall be allowed to dry to a tack-free condition, usually occurring in less than 10 minutes. The Portland cement concrete primer shall be allowed to dry in accordance with the thermoplastic manufacturer's recommendations. To shorten the curing time of the epoxy resins an infrared heating device may be used on the concrete primer.

a. Asphalt Concrete Primer: Primer shall be applied to all asphalt concrete pavements at a wet film thickness of 0.005 inch, plus or minus 0.001 inch (265-400 square feet per gallon).

b. Portland Cement Concrete Primer: Primer shall be applied to all concrete pavements (including concrete bridge decks) at a wet film thickness of between 0.04 to 0.05 inch (320-400 square feet per gallon).

3.2.2.3 Markings

After the primer has "set-up", the thermoplastic shall be applied at temperatures no lower than 375 degrees F nor higher than 425 degrees F at the point of deposition. Immediately after installation of the marking, drop-on glass spheres shall be mechanically applied so that the spheres are held by and imbedded in the surface of the molten material.

a. Extruded Markings: All extruded thermoplastic markings shall be applied at the specified width and at a thickness of not less than 0.125 inch nor more than 0.190 inch.

b. Sprayed Markings: All sprayed thermoplastic markings shall be applied at the specified width and the thicknesses designated in the contract plans. If the plans do not specify a thickness, centerline markings shall be applied at a wet thickness of 0.090 inch, plus or minus 0.005 inch, and edgeline markings at a wet thickness of 0.060 inch, plus or minus 0.005 inch.

c. Reflective Glass Spheres: Immediately following application, reflective glass spheres shall be dropped onto the molten thermoplastic marking at the rate of 1 pound per 20 square feet of compound.

3.2.3 Preformed Tape

The pavement surface temperature shall be a minimum of 60 degrees F and the ambient temperature shall be a minimum of 60 degrees F and rising. The preformed markings shall be placed in accordance with the manufacturer's written instructions.

3.2.4 Raised Reflective Markers

Prefabricated markers shall be aligned carefully at the required spacing and permanently fixed in place by means of epoxy resin adhesives. To insure good bond, pavement in areas where markers will be set shall be thoroughly cleaned by sandblasting and use of compressed air prior to applying adhesive.

3.2.5 Reflective Media

Application of reflective media shall immediately follow application of pigmented binder. Drop-on application of glass spheres shall be accomplished to insure that reflective media is evenly distributed at the specified rate of coverage. Should there be malfunction of either paint applicator or reflective media dispenser, operations shall be discontinued immediately until deficiency is corrected.

3.3 MARKING REMOVAL

Pavement marking, including plastic tape, shall be removed in the areas shown on the drawings. Removal of marking shall be as complete as possible without damage to the surface. Aggregate shall not be exposed by the removal process. After the markings are removed, the cleaned pavement surfaces shall exhibit adequate texture for remarking as specified in paragraph SURFACE PREPARATION. Contractor shall demonstrate removal of pavement marking in an area designated by the Contracting Officer. The demonstration area will become the standard for the remainder of the work.

3.3.1 Equipment Operation

Equipment shall be controlled and operated to remove markings from the pavement surface, prevent dilution or removal of binder from underlying pavement, and prevent emission of blue smoke from asphalt or tar surfaces.

3.3.2 Cleanup and Waste Disposal

The worksite shall be kept clean of debris and waste from the removal operations. Cleanup shall immediately follow removal operations in areas subject to air traffic. Debris shall be disposed of at approved sites.

-- End of Section --

SECTION TABLE OF CONTENTS

DIVISION 02 - SITE CONSTRUCTION

SECTION 02770A

CONCRETE SIDEWALKS AND CURBS AND GUTTERS

03/98

PART 1 GENERAL

1.1 REFERENCES
1.2 OMITTED
1.3 OMITTED
1.4 SUBMITTALS
1.5 WEATHER LIMITATIONS
1.5.1 Placing During Cold Weather
1.5.2 Placing During Warm Weather
1.6 PLANT, EQUIPMENT, MACHINES, AND TOOLS
1.6.1 General Requirements
1.6.2 Slip Form Equipment

PART 2 PRODUCTS

2.1 CONCRETE
2.1.1 Air Content
2.1.2 Slump
2.1.3 Reinforcement Steel
2.2 CONCRETE CURING MATERIALS
2.2.1 Impervious Sheet Materials
2.2.2 Burlap
2.2.3 White Pigmented Membrane-Forming Curing Compound
2.3 CONCRETE PROTECTION MATERIALS
2.4 JOINT FILLER STRIPS
2.4.1 Contraction Joint Filler for Curb and Gutter
2.4.2 Expansion Joint Filler, Premolded
2.5 JOINT SEALANTS
2.5.1 Joint Sealant, Cold-Applied
2.5.2 Joint Sealant, Hot-Poured
2.6 FORM WORK
2.6.1 Sidewalk Forms
2.6.2 Curb and Gutter Forms

PART 3 EXECUTION

3.1 SUBGRADE PREPARATION
3.1.1 Sidewalk Subgrade
3.1.2 Curb and Gutter Subgrade
3.1.3 Maintenance of Subgrade
3.2 FORM SETTING
3.2.1 Sidewalks
3.2.2 Curbs and Gutters
3.3 SIDEWALK CONCRETE PLACEMENT AND FINISHING
3.3.1 Formed Sidewalks
3.3.2 Concrete Finishing
3.3.3 Edge and Joint Finishing
3.3.4 Surface and Thickness Tolerances

3.4 CURB AND GUTTER CONCRETE PLACEMENT AND FINISHING
3.4.1 Formed Curb and Gutter
3.4.2 Curb and Gutter Finishing
3.4.3 Concrete Finishing
3.4.4 Joint Finishing
3.4.5 Surface and Thickness Tolerances
3.5 SIDEWALK JOINTS
3.5.1 Sidewalk Contraction Joints
3.5.2 Sidewalk Expansion Joints
3.6 CURB AND GUTTER JOINTS
3.6.1 Contraction Joints
3.6.2 Expansion Joints
3.7 CURING AND PROTECTION
3.7.1 General Requirements
3.7.1.1 Mat Method
3.7.1.2 Impervious Sheeting Method
3.7.1.3 Membrane Curing Method
3.7.2 Backfilling
3.7.3 Protection
3.7.4 Protective Coating
3.7.4.1 Application
3.7.4.2 Precautions
3.8 FIELD QUALITY CONTROL
3.8.1 General Requirements
3.8.2 Concrete Testing
3.8.2.1 Strength Testing
3.8.2.2 Air Content
3.8.2.3 Slump Test
3.8.3 Thickness Evaluation
3.8.4 Surface Evaluation
3.9 SURFACE DEFICIENCIES AND CORRECTIONS
3.9.1 Thickness Deficiency
3.9.2 High Areas
3.9.3 Appearance

-- End of Section Table of Contents --

UFGS-02770A (March 1998)

SECTION 02770A

CONCRETE SIDEWALKS AND CURBS AND GUTTERS
03/98

PART 1 GENERAL

1.1 REFERENCES

The publications listed below form a part of this specification to the extent referenced. The publications are referred to in the text by basic designation only.

AMERICAN ASSOCIATION OF STATE HIGHWAY AND TRANSPORTATION OFFICIALS (AASHTO)

AASHTO M 182	(1991) Burlap Cloth Made from Jute or Kenaf

AMERICAN SOCIETY FOR TESTING AND MATERIALS (ASTM)

ASTM A 185	(1997) Steel Welded Wire Fabric, Plain, for Concrete Reinforcement
ASTM A 615/A 615M	(1996a) Deformed and Plain Billet-Steel Bars for Concrete Reinforcement
ASTM A 616/A 616M	(1996a) Rail-Steel Deformed and Plain Bars for Concrete Reinforcement
ASTM A 617/A 617M	(1996a) Axle-Steel Deformed and Plain Bars for Concrete Reinforcement
ASTM C 31/C 31M	(1996) Making and Curing Concrete Test Specimens in the Field
ASTM C 143	(1990a) Slump of Hydraulic Cement Concrete
ASTM C 171	(1997) Sheet Materials for Curing Concrete
ASTM C 172	(1997) Sampling Freshly Mixed Concrete
ASTM C 173	(1996) Air Content of Freshly Mixed Concrete by the Volumetric Method
ASTM C 231	(1997) Air Content of Freshly Mixed Concrete by the Pressure Method
ASTM C 309	(1997) Liquid Membrane-Forming Compounds for Curing Concrete
ASTM C 920	(1995) Elastomeric Joint Sealants
ASTM D 1751	(1983; R 1991) Preformed Expansion Joint Filler for Concrete Paving and Structural

	Construction (Nonextruding and Resilient Bituminous Types)
ASTM D 1752	(1984; R 1996) Preformed Sponge Rubber and Cork Expansion Joint Fillers for Concrete Paving and Structural Construction
ASTM D 3405	(1996) Joint Sealants, Hot-Applied, for Concrete and Asphalt Pavements

1.2 OMITTED

1.3 OMITTED

1.4 SUBMITTALS

Government approval is required for submittals with a "G" designation; submittals not having a "G" designation are for information only. When used, a designation following the "G" designation identifies the office that will review the submittal for the Government. The following shall be submitted in accordance with Section 01330 SUBMITTAL PROCEDURES:

SD-03 Product Data

Concrete; G, RE

Copies of certified delivery tickets for all concrete used in the construction.

SD-06 Test Reports

Field Quality Control; G, RE

Copies of all test reports within 24 hours of completion of the test.

1.5 WEATHER LIMITATIONS

1.5.1 Placing During Cold Weather

Concrete placement shall not take place when the air temperature reaches 40 degrees F and is falling, or is already below that point. Placement may begin when the air temperature reaches 35 degrees F and is rising, or is already above 40 degrees F. Provisions shall be made to protect the concrete from freezing during the specified curing period. If necessary to place concrete when the temperature of the air, aggregates, or water is below 35 degrees F, placement and protection shall be approved in writing. Approval will be contingent upon full conformance with the following provisions. The underlying material shall be prepared and protected so that it is entirely free of frost when the concrete is deposited. Mixing water and aggregates shall be heated as necessary to result in the temperature of the in-place concrete being between 50 and 85 degrees F. Methods and equipment for heating shall be approved. The aggregates shall be free of ice, snow, and frozen lumps before entering the mixer. Covering and other means shall be provided for maintaining the concrete at a temperature of at least 50 degrees F for not less than 72 hours after placing, and at a temperature above freezing for the remainder of the curing period.

1.5.2 Placing During Warm Weather

The temperature of the concrete as placed shall not exceed 85 degrees F except where an approved retarder is used. The mixing water and/or aggregates shall be cooled, if necessary, to maintain a satisfactory placing temperature. The placing temperature shall not exceed 95 degrees F at any time.

1.6 PLANT, EQUIPMENT, MACHINES, AND TOOLS

1.6.1 General Requirements

Plant, equipment, machines, and tools used in the work shall be subject to approval and shall be maintained in a satisfactory working condition at all times. The equipment shall have the capability of producing the required product, meeting grade controls, thickness control and smoothness requirements as specified. Use of the equipment shall be discontinued if it produces unsatisfactory results. The Contracting Officer shall have access at all times to the plant and equipment to ensure proper operation and compliance with specifications.

1.6.2 Slip Form Equipment

Slip form paver or curb forming machine, will be approved based on trial use on the job and shall be self-propelled, automatically controlled, crawler mounted, and capable of spreading, consolidating, and shaping the plastic concrete to the desired cross section in 1 pass.

PART 2 PRODUCTS

2.1 CONCRETE

Concrete shall conform to the applicable requirements of Section 03300 CAST-IN-PLACE STRUCTURAL CONCRETE except as otherwise specified. Concrete shall have a minimum compressive strength of 3500 psi at 28 days. Maximum size of aggregate shall be 1-1/2 inches.

2.1.1 Air Content

Mixtures shall have air content by volume of concrete of 5 to 7 percent, based on measurements made immediately after discharge from the mixer.

2.1.2 Slump

The concrete slump shall be 2 inches plus or minus 1 inch where determined in accordance with ASTM C 143.

2.1.3 Reinforcement Steel

Reinforcement bars shall conform to ASTM A 615/A 615M, ASTM A 616/A 616M, or ASTM A 617/A 617M. Wire mesh reinforcement shall conform to ASTM A 185.

2.2 CONCRETE CURING MATERIALS

2.2.1 Impervious Sheet Materials

Impervious sheet materials shall conform to ASTM C 171, type optional, except that polyethylene film, if used, shall be white opaque.

2.2.2 Burlap

Burlap shall conform to AASHTO M 182.

2.2.3 White Pigmented Membrane-Forming Curing Compound

White pigmented membrane-forming curing compound shall conform to ASTM C 309, Type 2.

2.3 CONCRETE PROTECTION MATERIALS

Concrete protection materials shall be a linseed oil mixture of equal parts, by volume, of linseed oil and either mineral spirits, naphtha, or turpentine. At the option of the contractor, commercially prepared linseed oil mixtures, formulated specifically for application to concrete to provide protection against the action of deicing chemicals may be used, except that emulsified mixtures are not acceptable.

2.4 JOINT FILLER STRIPS

2.4.1 Contraction Joint Filler for Curb and Gutter

Contraction joint filler for curb and gutter shall consist of hard-pressed fiberboard.

2.4.2 Expansion Joint Filler, Premolded

Expansion joint filler, premolded, shall conform to ASTM D 1751 or ASTM D 1752, 3/8 inch thick, unless otherwise indicated.

2.5 JOINT SEALANTS

2.5.1 Joint Sealant, Cold-Applied

Joint sealant, cold-applied shall conform to ASTM C 920.

2.5.2 Joint Sealant, Hot-Poured

Joint sealant, hot-poured shall conform to ASTM D 3405.

2.6 FORM WORK

Form work shall be designed and constructed to ensure that the finished concrete will conform accurately to the indicated dimensions, lines, and elevations, and within the tolerances specified. Forms shall be of wood or steel, straight, of sufficient strength to resist springing during depositing and consolidating concrete. Wood forms shall be surfaced plank, 2 inches nominal thickness, straight and free from warp, twist, loose knots, splits or other defects. Wood forms shall have a nominal length of 10 feet. Radius bends may be formed with 3/4 inch boards, laminated to the required thickness. Steel forms shall be channel-formed sections with a flat top surface and with welded braces at each end and at not less than two intermediate points. Ends of steel forms shall be interlocking and self-aligning. Steel forms shall include flexible forms for radius forming, corner forms, form spreaders, and fillers. Steel forms shall have a nominal length of 10 feet with a minimum of 3 welded stake pockets per form. Stake pins shall be solid steel rods with chamfered heads and pointed tips designed for use with steel forms.

2.6.1 Sidewalk Forms

Sidewalk forms shall be of a height equal to the full depth of the finished sidewalk.

2.6.2 Curb and Gutter Forms

Curb and gutter outside forms shall have a height equal to the full depth of the curb or gutter. The inside form of curb shall have batter as indicated and shall be securely fastened to and supported by the outside form. Rigid forms shall be provided for curb returns, except that benders or thin plank forms may be used for curb or curb returns with a radius of 10 feet or more, where grade changes occur in the return, or where the central angle is such that a rigid form with a central angle of 90 degrees cannot be used. Back forms for curb returns may be made of 1-1/2 inch benders, for the full height of the curb, cleated together. In lieu of inside forms for curbs, a curb "mule" may be used for forming and finishing this surface, provided the results are approved.

PART 3 EXECUTION

3.1 SUBGRADE PREPARATION

The subgrade shall be constructed to the specified grade and cross section prior to concrete placement. Subgrade shall be placed and compacted in conformance with Section 02300A "EARTHWORK"..

3.1.1 Sidewalk Subgrade

The subgrade shall be tested for grade and cross section with a template extending the full width of the sidewalk and supported between side forms.

3.1.2 Curb and Gutter Subgrade

The subgrade shall be tested for grade and cross section by means of a template extending the full width of the curb and gutter. The subgrade shall be of materials equal in bearing quality to the subgrade under the adjacent pavement.

3.1.3 Maintenance of Subgrade

The subgrade shall be maintained in a smooth, compacted condition in conformity with the required section and established grade until the concrete is placed. The subgrade shall be in a moist condition when concrete is placed. The subgrade shall be prepared and protected to produce a subgrade free from frost when the concrete is deposited.

3.2 FORM SETTING

Forms shall be set to the indicated alignment, grade and dimensions. Forms shall be held rigidly in place by a minimum of 3 stakes per form placed at intervals not to exceed 4 feet. Corners, deep sections, and radius bends shall have additional stakes and braces, as required. Clamps, spreaders, and braces shall be used where required to ensure rigidity in the forms. Forms shall be removed without injuring the concrete. Bars or heavy tools shall not be used against the concrete in removing the forms. Any concrete found defective after form removal shall be promptly and satisfactorily repaired. Forms shall be cleaned and coated with form oil each time before concrete is placed. Wood forms may, instead, be thoroughly wetted with

water before concrete is placed, except that with probable freezing temperatures, oiling is mandatory.

3.2.1 Sidewalks

Forms for sidewalks shall be set with the upper edge true to line and grade with an allowable tolerance of 1/8 inch in any 10 foot long section. After forms are set, grade and alignment shall be checked with a 10 foot straightedge. Forms shall have a transverse slope as indicated with the low side adjacent to the roadway. Side forms shall not be removed for 12 hours after finishing has been completed.

3.2.2 Curbs and Gutters

The forms of the front of the curb shall be removed not less than 2 hours nor more than 6 hours after the concrete has been placed. Forms back of curb shall remain in place until the face and top of the curb have been finished, as specified for concrete finishing. Gutter forms shall not be removed while the concrete is sufficiently plastic to slump in any direction.

3.3 SIDEWALK CONCRETE PLACEMENT AND FINISHING

3.3.1 Formed Sidewalks

Concrete shall be placed in the forms in one layer. When consolidated and finished, the sidewalks shall be of the thickness indicated. After concrete has been placed in the forms, a strike-off guided by side forms shall be used to bring the surface to proper section to be compacted. The concrete shall be consolidated with an approved vibrator, and the surface shall be finished to grade with a strike off.

3.3.2 Concrete Finishing

After straightedging, when most of the water sheen has disappeared, and just before the concrete hardens, the surface shall be finished with a wood float or darby to a smooth and uniformly fine granular or sandy texture free of waves, irregularities, or tool marks. A scored surface shall be produced by brooming with a fiber-bristle brush in a direction transverse to that of the traffic, followed by edging.

3.3.3 Edge and Joint Finishing

All slab edges, including those at formed joints, shall be finished with an edger having a radius of 1/8 inch. Transverse joint shall be edged before brooming, and the brooming shall eliminate the flat surface left by the surface face of the edger. Corners and edges which have crumbled and areas which lack sufficient mortar for proper finishing shall be cleaned and filled solidly with a properly proportioned mortar mixture and then finished.

3.3.4 Surface and Thickness Tolerances

Finished surfaces shall not vary more than 5/16 inch from the testing edge of a 10-foot straightedge. Permissible deficiency in section thickness will be up to 1/4 inch.

3.4 CURB AND GUTTER CONCRETE PLACEMENT AND FINISHING

3.4.1 Formed Curb and Gutter

Concrete shall be placed to the section required in a single lift. Consolidation shall be achieved by using approved mechanical vibrators. Curve shaped gutters shall be finished with a standard curb "mule".

3.4.2 Curb and Gutter Finishing

Approved slipformed curb and gutter machines may be used in lieu of hand placement.

3.4.3 Concrete Finishing

Exposed surfaces shall be floated and finished with a smooth wood float until true to grade and section and uniform in texture. Floated surfaces shall then be brushed with a fine-hair brush with longitudinal strokes. The edges of the gutter and top of the curb shall be rounded with an edging tool to a radius of 1/2 inch. Immediately after removing the front curb form, the face of the curb shall be rubbed with a wood or concrete rubbing block and water until blemishes, form marks, and tool marks have been removed. The front curb surface, while still wet, shall be brushed in the same manner as the gutter and curb top. The top surface of gutter and entrance shall be finished to grade with a wood float.

3.4.4 Joint Finishing

Curb edges at formed joints shall be finished as indicated.

3.4.5 Surface and Thickness Tolerances

Finished surfaces shall not vary more than 1/4 inch from the testing edge of a 10-foot straightedge. Permissible deficiency in section thickness will be up to 1/4 inch.

3.5 SIDEWALK JOINTS

Sidewalk joints shall be constructed to divide the surface into rectangular areas. Transverse contraction joints shall be spaced at a distance equal to the sidewalk width or 5 feet on centers, whichever is less, and shall be continuous across the slab. Longitudinal contraction joints shall be constructed along the centerline of all sidewalks 10 feet or more in width. Transverse expansion joints shall be installed at sidewalk returns and opposite expansion joints in adjoining curbs. Where the sidewalk is not in contact with the curb, transverse expansion joints shall be installed as indicated. Expansion joints shall be formed about structures and features which project through or into the sidewalk pavement, using joint filler of the type, thickness, and width indicated.

3.5.1 Sidewalk Contraction Joints

The contraction joints shall be formed in the fresh concrete by cutting a groove in the top portion of the slab to a depth of at least one-fourth of the sidewalk slab thickness, using a jointer to cut the groove, or by sawing a groove in the hardened concrete with a power-driven saw, unless otherwise approved. Sawed joints shall be constructed by sawing a groove in the concrete with a 1/8 inch blade to the depth indicated. An ample supply of saw blades shall be available on the job before concrete

placement is started, and at least one standby sawing unit in good working order shall be available at the jobsite at all times during the sawing operations.

3.5.2 Sidewalk Expansion Joints

Expansion joints shall be formed with 3/8 inch joint filler strips. Joint filler shall be placed with top edge 1/4 inch below the surface and shall be held in place with steel pins or other devices to prevent warping of the filler during floating and finishing. Immediately after finishing operations are completed, joint edges shall be rounded with an edging tool having a radius of 1/8 inch, and concrete over the joint filler shall be removed. At the end of the curing period, expansion joints shall be cleaned and filled with joint sealant. The joint opening shall be thoroughly cleaned before the sealing material is placed. Sealing material shall not be spilled on exposed surfaces of the concrete. Concrete at the joint shall be surface dry and atmospheric and concrete temperatures shall be above 50 degrees F at the time of application of joint sealing material. Excess material on exposed surfaces of the concrete shall be removed immediately and concrete surfaces cleaned.

3.6 CURB AND GUTTER JOINTS

Curb and gutter joints shall be constructed at right angles to the line of curb and gutter.

3.6.1 Contraction Joints

Contraction joints shall be constructed directly opposite contraction joints in abutting portland cement concrete pavements and spaced so that monolithic sections between curb returns will not be less than 5 feet nor greater than 15 feet in length. Contraction joints shall be constructed by means of 1/8 inch thick separators and of a section conforming to the cross section of the curb and gutter. Separators shall be removed as soon as practicable after concrete has set sufficiently to preserve the width and shape of the joint and prior to finishing.

3.6.2 Expansion Joints

Expansion joints shall be formed by means of preformed expansion joint filler material cut and shaped to the cross section of curb and gutter. Expansion joints shall be provided in curb and gutter directly opposite expansion joints of abutting portland cement concrete pavement, and shall be of the same type and thickness as joints in the pavement. Where curb and gutter do not abut portland cement concrete pavement, expansion joints at least 3/8 inch in width shall be provided at intervals not exceeding 20 feet. Expansion joints shall be provided in nonreinforced concrete gutter at locations indicated. Expansion joints shall be sealed immediately following curing of the concrete or as soon thereafter as weather conditions permit. Expansion joints and the top 1 inch depth of curb and gutter contraction-joints shall be sealed with joint sealant. The joint opening shall be thoroughly cleaned before the sealing material is placed. Sealing material shall not be spilled on exposed surfaces of the concrete. Concrete at the joint shall be surface dry and atmospheric and concrete temperatures shall be above 50 degrees F at the time of application of joint sealing material. Excess material on exposed surfaces of the concrete shall be removed immediately and concrete surfaces cleaned.

3.7 CURING AND PROTECTION

3.7.1 General Requirements

Concrete shall be protected against loss of moisture and rapid temperature changes for at least 7 days from the beginning of the curing operation. Unhardened concrete shall be protected from rain and flowing water. All equipment needed for adequate curing and protection of the concrete shall be on hand and ready for use before actual concrete placement begins. Protection shall be provided as necessary to prevent cracking of the pavement due to temperature changes during the curing period.

3.7.1.1 Mat Method

The entire exposed surface shall be covered with 2 or more layers of burlap. Mats shall overlap each other at least 6 inches.The mat shall be thoroughly wetted with water prior to placing on concrete surface and shall be kept continuously in a saturated condition and in intimate contact with concrete for not less than 7 days.

3.7.1.2 Impervious Sheeting Method

The entire exposed surface shall be wetted with a fine spray of water and then covered with impervious sheeting material. Sheets shall be laid directly on the concrete surface with the light-colored side up and overlapped 12 inches when a continuous sheet is not used. The curing medium shall not be less than 18-inches wider than the concrete surface to be cured, and shall be securely weighted down by heavy wood planks, or a bank of moist earth placed along edges and laps in the sheets. Sheets shall be satisfactorily repaired or replaced if torn or otherwise damaged during curing. The curing medium shall remain on the concrete surface to be cured for not less than 7 days.

3.7.1.3 Membrane Curing Method

A uniform coating of white-pigmented membrane-curing compound shall be applied to the entire exposed surface of the concrete as soon after finishing as the free water has disappeared from the finished surface. Formed surfaces shall be coated immediately after the forms are removed and in no case longer than 1 hour after the removal of forms. Concrete shall not be allowed to dry before the application of the membrane. If any drying has occurred, the surface of the concrete shall be moistened with a fine spray of water and the curing compound applied as soon as the free water disappears. Curing compound shall be applied in two coats by hand-operated pressure sprayers at a coverage of approximately 200 square feet per gallon for the total of both coats. The second coat shall be applied in a direction approximately at right angles to the direction of application of the first coat. The compound shall form a uniform, continuous, coherent film that will not check, crack, or peel and shall be free from pinholes or other imperfections. If pinholes, abrasion, or other discontinuities exist, an additional coat shall be applied to the affected areas within 30 minutes. Concrete surfaces that are subjected to heavy rainfall within 3 hours after the curing compound has been applied shall be resprayed by the method and at the coverage specified above. Areas where the curing compound is damaged by subsequent construction operations within the curing period shall be resprayed. Necessary precautions shall be taken to insure that the concrete is properly cured at sawed joints, and that no curing compound enters the joints. The top of the joint opening and the joint groove at exposed edges shall be tightly sealed before the concrete

in the region of the joint is resprayed with curing compound. The method used for sealing the joint groove shall prevent loss of moisture from the joint during the entire specified curing period. Approved standby facilities for curing concrete pavement shall be provided at a location accessible to the jobsite for use in the event of mechanical failure of the spraying equipment or other conditions that might prevent correct application of the membrane-curing compound at the proper time. Concrete surfaces to which membrane-curing compounds have been applied shall be adequately protected during the entire curing period from pedestrian and vehicular traffic, except as required for joint-sawing operations and surface tests, and from any other possible damage to the continuity of the membrane.

3.7.2 Backfilling

After curing, debris shall be removed and the area adjoining the concrete shall be backfilled, graded, and compacted to conform to the surrounding area in accordance with lines and grades indicated.

3.7.3 Protection

Completed concrete shall be protected from damage until accepted. The Contractor shall repair damaged concrete and clean concrete discolored during construction. Concrete that is damaged shall be removed and reconstructed for the entire length between regularly scheduled joints. Refinishing the damaged portion will not be acceptable. Removed damaged portions shall be disposed of as directed.

3.7.4 Protective Coating

Protective coating of linseed oil mixture shall be applied to the exposed-to-view concrete surface.

3.7.4.1 Application

Curing and backfilling operation shall be completed prior to applying two coats of protective coating. Concrete shall be surface dry and clean before each application. Coverage shall be by spray application at not more than 50 square yards per gallon for first application and not more than 70 square yards per gallon for second application, except that the number of applications and coverage for each application for commercially prepared mixture shall be in accordance with the manufacturer's instructions. Coated surfaces shall be protected from vehicular and pedestrian traffic until dry.

3.7.4.2 Precautions

Protective coating shall not be heated by direct application of flame or electrical heaters and shall be protected from exposure to open flame, sparks, and fire adjacent to open containers or applicators. Material shall not be applied at ambient or material temperatures lower than 50 degrees F.

3.8 FIELD QUALITY CONTROL

3.8.1 General Requirements

The Contractor shall perform the inspection and tests described and meet the specified requirements for inspection details and frequency of testing.

Based upon the results of these inspections and tests, the Contractor shall take the action and submit reports as required below, and any additional tests to insure that the requirements of these specifications are met.

3.8.2 Concrete Testing

3.8.2.1 Strength Testing

The Contractor shall provide molded concrete specimens for strength tests. Samples of concrete placed each day shall be taken not less than once a day nor less than once for every 250 cubic yards of concrete. The samples for strength tests shall be taken in accordance with ASTM C 172. Cylinders for acceptance shall be molded in conformance with ASTM C 31/C 31M by an approved testing laboratory. Each strength test result shall be the average of 2 test cylinders from the same concrete sample tested at 28 days, unless otherwise specified or approved. Concrete specified on the basis of compressive strength will be considered satisfactory if the averages of all sets of three consecutive strength test results equal or exceed the specified strength, and no individual strength test result falls below the specified strength by more than 500 psi.

3.8.2.2 Air Content

Air content shall be determined in accordance with ASTM C 173 or ASTM C 231. ASTM C 231 shall be used with concretes and mortars made with relatively dense natural aggregates. Two tests for air content shall be made on randomly selected batches of each class of concrete placed during each shift. Additional tests shall be made when excessive variation in concrete workability is reported by the placing foreman or the Government inspector. If results are out of tolerance, the placing foreman shall be notified and he shall take appropriate action to have the air content corrected at the plant. Additional tests for air content will be performed on each truckload of material until such time as the air content is within the tolerance specified.

3.8.2.3 Slump Test

Two slump tests shall be made on randomly selected batches of each class of concrete for every 250 cubic yards, or fraction thereof, of concrete placed during each shift. Additional tests shall be performed when excessive variation in the workability of the concrete is noted or when excessive crumbling or slumping is noted along the edges of slip-formed concrete.

3.8.3 Thickness Evaluation

The anticipated thickness of the concrete shall be determined prior to placement by passing a template through the formed section or by measuring the depth of opening of the extrusion template of the curb forming machine. If a slip form paver is used for sidewalk placement, the subgrade shall be true to grade prior to concrete placement and the thickness will be determined by measuring each edge of the completed slab.

3.8.4 Surface Evaluation

The finished surface of each category of the completed work shall be uniform in color and free of blemishes and form or tool marks.

3.9 SURFACE DEFICIENCIES AND CORRECTIONS

3.9.1 Thickness Deficiency

When measurements indicate that the completed concrete section is deficient in thickness by more than 1/4 inch the deficient section will be removed, between regularly scheduled joints, and replaced.

3.9.2 High Areas

In areas not meeting surface smoothness and plan grade requirements, high areas shall be reduced either by rubbing the freshly finished concrete with carborundum brick and water when the concrete is less than 36 hours old or by grinding the hardened concrete with an approved surface grinding machine after the concrete is 36 hours old or more. The area corrected by grinding the surface of the hardened concrete shall not exceed 5 percent of the area of any integral slab, and the depth of grinding shall not exceed 1/4 inch. Pavement areas requiring grade or surface smoothness corrections in excess of the limits specified above shall be removed and replaced.

3.9.3 Appearance

Exposed surfaces of the finished work will be inspected by the Government and any deficiencies in appearance will be identified. Areas which exhibit excessive cracking, discoloration, form marks, or tool marks or which are otherwise inconsistent with the overall appearances of the work shall be removed and replaced.

-- End of Section --

SECTION TABLE OF CONTENTS

DIVISION 02 - SITE CONSTRUCTION

SECTION 02792

BASKETBALL COURT SURFACING

06/01

PART 1 GENERAL

1.1 REFERENCES
1.2 SUBMITTALS
1.3 DELIVERY, STORAGE, AND HANDLING
1.4 INSPECTION
1.5 MANUFACTURER'S QUALIFICATION
1.6 INSTALLER'S QUALIFICATION

PART 2 PRODUCTS

2.1 MATERIALS
2.2 SYNTHETIC SURFACING
2.2.1 Subbase
2.2.1.1 Bituminous Subbase
2.2.2 Wear Surface
2.2.3 Color

PART 3 EXECUTION

3.1 SITE PREPARATION
3.1.1 Finished Grade and Underground Utilities
3.1.2 Obstructions Below Ground
3.1.3 Subgrade
3.1.4 Subsurface
3.1.5 Subbase
3.1.6 Bituminous Curing
3.2 INSTALLING SYNTHETIC SURFACING SYSTEM
3.2.1 Temperature Limitation
3.2.2 Surfacing System
3.3 RESTORATION AND CLEAN UP
3.3.1 Clean Up
3.3.2 Protection
3.3.3 Disposal of Materials
3.4 PROTECTIVE SURFACING ACCEPTANCE
3.4.1 Maintenance Instruction
3.5 RE-INSTALLATION

-- End of Section Table of Contents --

SECTION 02792

BASKETBALL COURT SURFACING
06/01

PART 1 GENERAL

1.1 REFERENCES

The publications listed below form a part of this specification to the extent referenced. The publications are referred to in the text by basic designation only.

AMERICAN SOCIETY FOR TESTING AND MATERIALS (ASTM)

ASTM D 1557	(1991; R 1998) Laboratory Compaction Characteristics of Soil Using Modified Effort (56,000 ft-lbf/cu. ft. (2,700 kN-m/cu.m.))
ASTM D 2047	(1999) Static Coefficient of Friction of Polish-Coated Floor Surfaces as Measured by the James Machine

1.2 SUBMITTALS

Government approval is required for submittals with a "G" designation; submittals not having a "G" designation are for information only. When used, a designation following the "G" designation identifies the office that will review the submittal for the Government. The following shall be submitted in accordance with Section 01330 SUBMITTAL PROCEDURES:

SD-03 Product Data

Synthetic Surfacing

Manufacturer's descriptive data; catalogue cuts.

Manufacturer's specifications, handling and storage requirements, installation procedures, and safety data sheets.

Delivery schedule and manufacturer name for synthetic surfacing plus delivery, storage and handling information.

Manufacturer's Qualification

Name of the owner or user; service or preventive maintenance provider; date of the installation; point of contact and telephone number; and address for 10 sites.

Temperature Limitation

Temperature limitation for applying surfacing.

Fluid-applied surfacing

EPA registered uses, toxicity levels, and application hazards.

Color

Two color charts displaying surfacing colors, color granule percentages and finishes.

SD-06 Test Reports

Synthetic Surfacing

Chemical composition, color granule percentage, and test results to which material has been subjected; identifying each material and component containing recycled materials and showing the estimated percentage of recovered material content. Freezing temperature life-cycle durability.

SD-07 Certificates

Materials

Prior to the delivery of materials, certificates of compliance attesting that materials meet the specified requirements. Certified copies of the material certificates shall include composition and tests to which the material has been subjected.

Installer's Qualification

The installer's company name and address, and training and experience certification.

SD-10 Operation and Maintenance Data

Maintenance Instruction; G, RE

Two bound copies of manufacturer's operation and maintenance manuals. The Contractor shall include manufacturer supplied spare parts.

1.3 DELIVERY, STORAGE, AND HANDLING

A delivery schedule shall be provided at least 10 calendar days prior to the first day of delivery. Protective surfacing material shall be delivered, handled, and stored in accordance with the manufacturer's recommendations. The storage area shall be as designated. The materials shall be stored in a dry, covered area until installed.

1.4 INSPECTION

Surfacing material shall be inspected upon arrival at the job site for meeting specified quality. Unacceptable materials shall be removed from the job site.

1.5 MANUFACTURER'S QUALIFICATION

Surfacing should have been installed in a minimum 10 sites and been in successful service for a minimum 5 year calendar period.

1.6 INSTALLER'S QUALIFICATION

The installer shall be certified by the manufacturer for training and experience installing the protective surfacing.

PART 2 PRODUCTS

2.1 MATERIALS

Materials shall be the standard products of a manufacturer regularly engaged in the manufacture of ~~protective~~athletic court surfacing and shall be similar to surfacing in satisfactory use a minimum 5 year calendar period. ~~Protective s~~Surfacing consists of ~~two systems; synthetic surfacing and loose fill surfacing~~a binder, top coat, and line paint..

2.2 SYNTHETIC SURFACING
*6
Synthetic surfacing includes the following:~~ poured-in-place system; tile system; and combination system. The synthetic surfacing consists of either impact attenuating substrate covered by a wear surface bonded to produce a unified system; a shredded rubber or aggregate substrate covered by a polyethylene plastic woven sheet wear surface; or a uniform material manufactured in such a way that the top portion meets the requirements specified for wear surface.~~ squeege-applied hinder and top coat apecially formulayed for exterior use on tennis, basketball or similar venues over asphalt paved areas.

2.2.1 Subbase

The subbase for synthetic surfacing may be bituminous material.

2.2.1.1 Bituminous Subbase

Bituminous material shall conform to Section 02547 BBITUMINOUS PAVEMENT WITH BASE COURSE.
*6
2.2.2 Wear Surface

Wear surfaces consist of the following: a ~~poured-in-place~~squeegee-applied durable, weather-resistant, ultraviolet stable, water permeable material binder andtop-coat~~; an integral component of a tile system; synthetic turf wear surface; rubber sheet wear surface; or a polyethylene woven plastic sheet wear surface~~. The wear surface shall meet requirements of ASTM D 2047 for a minimum 0.8 coefficient of friction.
*6
~~2.2.3.1 Poured-in-Place Wear Surface~~

~~Poured-in-place wear surface shall consist of ethylene propylene diene monomer (EPDM) particles adhered with a polyurethane binder formulated to produce an even, uniform surface. Particles of EPDM shall meet ASTM D 412 for tensile strength and elongation, and contain a minimum 25 percent of rubber hydrocarbons. Particles of EPDM shall be peroxide or sulfur cured in accordance with the manufacturer. Size of rubber particles shall be between a minimum 1/32 inch, and a maximum 1/8 inch diameter. Binder shall be between a minimum 16 percent and a maximum 21 percent total weight of rubber used in the wear surface, and shall provide 100 percent coating of the particles. Wear surface shall be a minimum 3/8 inch thick. The wear surface shall be porous.~~

2.2.3 Color

*6

The color shall be as indicated and shall be integral with the top coat. ~~An EPDM wear surface is preferred for color retention. Black or the following dark colored SBR wear surfaces retain heat and are not acceptable: color combinations containing more than 10 percent black; or color combinations averaging more than 10 percent dark colors.~~

*6

~~2.2.6 Sealant~~

~~Sealant for tile or combined protective surface systems shall be compatible with the protective surfacing, and shall match the color of the wear surface.~~

~~2.2.8 Binder~~

~~Binder for synthetic surfacing shall be nontoxic, weather-resistant, ultraviolet stable, non-hardening, and retaining impact-attenuating performance. It shall be 100 percent solids containing polyurethane, methylene diphenel isocyanate (MDI), or as recommended by the manufacturer. A maximum 2 percent of toluene diphenel isocyanate (TDI) shall be used. Weight of polyurethane shall be between a minimum 8.5 lbs/gal and a maximum 9.5 lbs/gal. Coloring pigments shall be inorganic oxides.~~

~~2.2.10 Containment Curbs~~

~~Containment curbs include the following: treated wood, concrete, recycled plastic, or recycled plastic molded as lumber. Containment curbs shall provide a smooth and hazard-free transition from the protective surfacing to the adjacent surface. Curbs shall be free of sharp vertical edges, protruding elements and trip hazards. Curbs shall be as recommended by the manufacturer. All edges should be provided with a minimum 1/2 inch radius.~~

~~2.6 CURBS~~

~~2.6.1 Concrete Curb~~

~~Concrete curbs shall conform to Section 02770A CONCRETE SIDEWALKS AND CURBS AND GUTTERS~~

PART 3 EXECUTION

3.1 SITE PREPARATION

Prior to installing the protective surfacing, verify that site furnishings are installed in accordance with Section 02870A SITE FURNISHINGS.

3.1.1 Finished Grade and Underground Utilities

The Contractor shall verify that finished grades are as indicated; the smooth grading has been completed in accordance with Section 02300A EARTHWORK; installation of the underground utilities through the area has been completed in accordance with Section 02316A EXCAVATION, TRENCHING, AND BACKFILLING FOR UTILITIES SYSTEMS; installation of the storm-drainage system through the area has been completed in accordance with Section 02630A STORM-DRAINAGE SYSTEM. The location of underground utilities and facilities in the area of the operation shall be verified. Damage to underground utilities and facilities shall be repaired at the Contractor's

expense.

3.1.2 Obstructions Below Ground

When obstructions below ground affect the work, shop drawings showing proposed adjustments shall be provided.

3.1.3 Subgrade

Subgrade irregularities shall be corrected to ensure the required depth of protective surfacing is provided. The subgrade elevation shall be as required by the manufacturer.

3.1.4 Subsurface

The subsurface shall be installed in a true, even plane, and sloped to provide positive drainage as indicated.

3.1.5 Subbase

Tolerance of the concrete or bituminous subbase shall be within a maximum 1/4 inch in 10 feet . Tolerance of aggregate subbase shall be within a maximum similar to 1/4 inch in 10 feet.. Aggregate subbase shall be compacted to a maximum 95 percent, ASTM D 1557. The compaction shall be completed in accordance with Section 02300A EARTHWORK.

3.1.6 Bituminous Curing

Bituminous or concrete subbase shall be cured in accordance with the manufacturer's requirements. Curing compounds and other deleterious substances that adversely affect adhesion shall be removed. Surface shall be clean and dry.

3.2 INSTALLING SYNTHETIC SURFACING SYSTEM

Surfacing edges shall fully adhere to the subsurface. Fully cover the subsurface to ensure no hard surfaces are exposed.

3.2.1 Temperature Limitation

Temperature limitation for applying surfacing shall be provided.

*6

3.2.2 ~~Poured-in-Place~~Surfacing System

Entire system including binder, top coat and line paint shall be installed in strict accordance with the manufacturer's printed instructions. ~~Components of the poured-in-place system shall be mixed mechanically on-site in accordance with manufacturer's recommendations. Hand-mixing is prohibited.~~ Installation of ~~poured-in-place~~ surfacing shall be seamless and completely bonded to subsurface. Material shall cover foundations and shall be tight around elements penetrating the surface.

*6

~~3.2.2.3 Poured-in-Place Wear Surface~~

~~Wear surface shall be bonded to substrate. Adhesive shall be applied to substrate in small quantities so that wear surface can be applied before adhesive dries. Surface shall be hand troweled to a smooth, even finish. When wear surface is composed of different color patterns, pour shall be continuous and seamless. When seams are required due to color change or~~

~~field conditions, the adjacent wear surface shall be placed as soon as possible, before initial pour has cured. The edge of initial pour shall be coated with adhesive and wear surface mixture shall be immediately applied.~~

3.3 RESTORATION AND CLEAN UP

When the operation has been completed, the Contractor shall clean up and protect the site. Existing areas that have been damaged from the operation shall be restored to original condition at the Contractor's expense.

3.3.1 Clean Up

The site and play events shall be cleaned of all materials associated with the operation. Play events and surfaces shall be cleaned of dirt, stains, filings, and other blemishes occurring from shipment and installation. Cleaning methods and agents shall be as recommended by the manufacturer.

3.3.2 Protection

The area shall be protected as required or directed by providing barricades and signage.

3.3.3 Disposal of Materials

Excess and waste material shall be removed and disposed of off Government property.

3.4 PROTECTIVE SURFACING ACCEPTANCE

3.4.1 Maintenance Instruction

The manufacturer's operation and maintenance manual describing the recommended preventive maintenance, inspection frequency and techniques, periodic adjustments, lubricants, and cleaning requirements shall be furnished.

3.5 RE-INSTALLATION

When re-installation is required, the following shall be accomplished. Re-install the product as specified. Provide new replacement materials supplied by the manufacturer (material acquisition of replacement parts is the responsibility of the Contractor). Damage caused by the failed installation shall be repaired at the Contractor's expense.

-- End of Section --

SECTION TABLE OF CONTENTS

DIVISION 02 - SITE CONSTRUCTION

SECTION 02870A

SITE FURNISHINGS

06/01

PART 1 GENERAL

1.1 REFERENCES
1.2 SUBMITTALS
1.3 DELIVERY, STORAGE, AND HANDLING
1.4 INSPECTION

PART 2 PRODUCTS

2.1 MATERIALS
2.1.1 Concrete
2.1.1.1 Omitted
2.1.1.2 Cast-in-Place Concrete
2.1.2 Masonry
2.1.3 Metal
2.1.3.1 Steel
2.1.3.2 Reinforcing Steel
2.1.3.3 Cast Iron
2.1.3.4 Cast Aluminum
2.1.3.5 Bronze, Copper and Other Ounce Metals
2.1.4 Wood
2.1.4.1 Treatment
2.1.4.2 Selection
2.1.5 Recycled Material
2.1.5.1 General Requirements
2.2 HARDWARE
2.3 ANCHORS
2.4 FINISH
2.4.1 Coatings
2.4.1.1 Galvanizing
2.4.1.2 Polyester Powder
2.4.2 Wood Sealants
2.4.3 Paint
2.4.4 Color
2.5 SITE FURNISHING STANDARDS
2.5.1 Omitted
2.5.2 Bicycle Racks
2.5.3 Metal Pipe Bicycle Racks
2.6 GAZEBO
2.6.1 Framing Systems
2.6.2 Decking
2.6.3 Shingles

PART 3 EXECUTION

3.1 INSTALLATION
3.1.1 Omitted
3.1.2 Application of Field Finishes

3.1.3 Parts
3.1.4 Assembly
3.1.5 Testing
3.2 RESTORATION AND CLEAN UP
3.2.1 Clean Up
3.2.2 Protection
3.2.3 Disposal of Materials
3.3 RE-INSTALLATION

-- End of Section Table of Contents --

UFGS-02870A (June 2001)

SECTION 02870A

SITE FURNISHINGS
06/01

PART 1 GENERAL

1.1 REFERENCES

The publications listed below form a part of this specification to the extent referenced. The publications shall be referred to in the text by basic designation only.

AMERICAN INSTITUTE OF TIMBER CONSTRUCTION (AITC)

AITC 190.1	(1992) Structural Glued Laminated Timber

AMERICAN SOCIETY FOR TESTING AND MATERIALS (ASTM)

ASTM A 36/A 36M	(2000) Carbon Structural Steel
ASTM A 48	(1994ael) Gray Iron Castings
ASTM A 53	(1998) Pipe, Steel, Black and Hot-Dipped, Zinc-Coated Welded and Seamless
ASTM A 123/A 123M	(2000) Zinc (Hot-Dip Galvanized) Coatings on Iron and Steel Products
ASTM A 153/A 153M	(2000) Zinc Coating (Hot-Dip) on Iron and Steel Hardware
ASTM A 500	(1999) Cold-Formed Welded and Seamless Carbon Steel Structural Tubing in Rounds and Shapes
ASTM A 501	(1999) Hot-Formed Welded and Seamless Carbon Steel Structural Tubing
ASTM A 615/A 615M	(2000) Deformed and Plain Billet-Steel Bars for Concrete Reinforcement
ASTM B 26/B 26M	(1999) Aluminum-Alloy Sand Castings
ASTM B 62	(1993) Composition Bronze or Ounce Metal Castings
ASTM B 108	(1999) Aluminum-Alloy Permanent Mold Castings
ASTM C 150	(1999a) Portland Cement
ASTM D 648	(2000) Deflection Temperature of Plastics

	Under Flexural Load
ASTM D 2990	(1995) Tensile, Compressive, and Flexural Creep and Creep-Rupture of Plastics
ASTM F 1487	(1998) Standard Consumer Safety Performance Specification for Playground Equipment for Public Use

1.2 SUBMITTALS

Government approval is required for submittals with a "G" designation; submittals not having a "G" designation are for information only. When used, a designation following the "G" designation identifies the office that will review the submittal for the Government. The following shall be submitted in accordance with Section 01330 SUBMITTAL PROCEDURES:

SD-02 Shop Drawings.

Site Furnishing Standards

Drawings showing scaled details of proposed site furnishings, elevations for each type of site furnishing; dimensions, details, and methods of mounting or anchoring; shape and thickness of materials; and details of construction.

SD-03 Product Data

Site Furnishings

Manufacturer's descriptive data and catalog cuts.

Installation

Manufacturer's installation and maintenance instructions.

Materials

A listing indicating the furnishings provided have been in proven satisfactory use for at least 2 years.

SD-04 Samples

Finish

Two sets of color data for each furnishing displaying manufacturer's color selections and finishes, and identifying those colors and finishes proposed for use.

SD-06 Test Reports

Recycled Material

A report of site furnishing parts consisting of recycled materials. Product specification data, providing test information for deflection and creep in accordance with ASTM D 648 and ASTM D 2990 for site furnishings which use plastic lumber as a component, shall be submitted. The data shall provide a comparison of deflection and creep measurements to other comparable materials.

1.3 DELIVERY, STORAGE, AND HANDLING

Materials shall be delivered, handled, and stored in accordance with the manufacturer's recommendations. The storage area shall be as designated. The materials shall be stored in a dry, covered area until installed.

1.4 INSPECTION

Site furnishings shall be inspected upon arrival at the job site for conformity to specifications and quality in accordance with paragraph MATERIALS. Unacceptable items shall be removed from the job site.

PART 2 PRODUCTS

2.1 MATERIALS

Materials shall be the standard products of a manufacturer regularly engaged in the manufacture of such products. The materials provided shall be of a type with proven satisfactory use for at least 2 years.

2.1.1 Concrete

Portland cement shall conform to ASTM C 150 Types I, II, or III.

2.1.1.1 Omitted

2.1.1.2 Cast-in-Place Concrete

Cast-in-place concrete materials and products shall conform to Section 03300 CAST-IN-PLACE STRUCTURAL CONCRETE.

2.1.2 Masonry

Masonry material and products shall conform to Section 04200 MASONRY.

2.1.3 Metal

Metallic materials and products shall conform to Section 05500A MISCELLANEOUS METAL. Metal components shall be furnished with factory drilled holes. Components shall be free of excess weld and spatter. Metal components with holes that will not be filled by hardware or hidden by other components will be rejected.

2.1.3.1 Steel

Structural steel products shall conform to ASTM A 36/A 36M, ASTM A 500 and ASTM A 501.

2.1.3.2 Reinforcing Steel

Steel used for reinforcement shall be deformed billet steel Grade 40. Steel shall conform to ASTM A 615/A 615M.

2.1.3.3 Cast Iron

Cast iron shall conform to ASTM A 48 Class 35 or better. The Contractor shall provide castings manufactured true to pattern and component parts that fit together in a satisfactory manner. Castings shall be of uniform

quality, free from blowholes, porosity, hard spots, shrinkage, distortion, or other defects. Smooth castings shall be well-cleaned by sand or shot blasting.

2.1.3.4 Cast Aluminum

Cast aluminum shall conform to ASTM B 26/B 26M and ASTM B 108. The Contractor shall provide castings manufactured true to pattern and component parts that fit together in a satisfactory manner. Castings shall be of uniform quality, free from blowholes, porosity, hard spots, shrinkage, distortion, or other defects. Smooth castings shall be well-cleaned by sand or shot blasting.

2.1.3.5 Bronze, Copper and Other Ounce Metals

Bronze, copper, and other ounce metals shall conform to ASTM B 62.

2.1.4 Wood

The Contractor shall provide premium grade wood free of knots; boards with eased edges and ends; and wood components with factory drilled holes. Components with holes that will not be filled by hardware or hidden by other components will be rejected.

2.1.4.1 Treatment

Wood that is not naturally rot and insect resistant shall be treated with standard procedures. Creosote, pentachlorophenol, tributyl tin oxide shall not be used in conformance with ASTM F 1487. Ammonium Copper Quat (ACQ) shall not be used for surfaces likely to contact the skin of small children.

2.1.4.2 Selection

Wood products shall be selected to withstand the climatic conditions of the region in which the site is located.

2.1.5 Recycled Material

2.1.5.1 General Requirements

Recycled materials shall contain a minimum 85 percent recycled post-consumer product and shall conform to EPA requirements in accordance with Section 01670 RECYCLED / RECOVERED MATERIALS. Recycled materials shall be constructed or manufactured with a maximum 1/4 inch deflection or creep in any member in conformance with ASTM D 648 and ASTM D 2990.

2.2 HARDWARE

Hardware shall be stainless steel zinc-plated or galvanized steel in accordance with ASTM A 153/A 153M and compatible with the material to which applied. All exposed hardware shall match in color and finish. Mounting hardware shall be concealed, recessed, and plugged.

2.3 ANCHORS

Anchors shall be provided, where necessary, for fastening site furnishings securely in place and in accordance with approved manufacturer's instructions. Anchoring devices that may be used, when no anchors are otherwise specified or indicated, include anchor bolts, slotted inserts,

expansion shields for concrete; toggle bolts and through bolts for masonry; machine carriage bolts for steel; and lag bolts and screws for wood.

2.4 FINISH

Finish shall be as specified by the manufacturer or as indicated. Exposed surfaces and edges shall be rounded, polished, or sanded. Finish shall be non-toxic, non-glare, and resistant to corrosion. Exposed surfaces shall be smooth and splinter-free exposed surfaces.

2.4.1 Coatings

2.4.1.1 Galvanizing

Galvanized components shall be hot-dipped in zinc after fabrication in accordance with ASTM A 123/A 123M. Tailings and sharp protrusions formed as a result of the hot-dip process shall be removed and exposed edges burnished.

2.4.1.2 Polyester Powder

Powder-coated surfaces shall receive electrostatic zinc coating prior to painting. Powder coating shall be electrostatically applied and oven cured. Polyester powder coating shall be resistant to ultraviolet (UV) light.

2.4.2 Wood Sealants

Exposed wood surfaces shall have, as a minimum, two shop coats of paint, varnish, sealer, or other approved preservative. Sealants shall seal all applied surfaces from air.

2.4.3 Paint

Paint shall be factory applied with a minimum of 2 coats. Paint shall be weather-resistant and resistant to cracking, peeling and fading.

2.4.4 Color

Color of site furnishing components shall be as indicated.

2.5 SITE FURNISHING STANDARDS

Site furnishings shall be furnished with the dimensions and requirements indicated.

2.5.1 Omitted

2.5.2 Bicycle Racks

Bicycle racks shall accommodate locking devices and secure, as a minimum, one wheel and part of the frame simultaneously. The spacing between racks or stanchions shall be a minimum of 24 inches.

2.5.3 Metal Pipe Bicycle Racks

Provide ASTM A 53 schedule 40 steel pipe bicycle racks in serpentine or ribbon configuration and of 4 1/2 inch pipe size. Type of mounting, bicycle rack capacity and height above the ground as shown on the drawings.

2.6 GAZEBO

Provide prefabricated gazebo systems to meet design conditions indicated. Shelter design shall conform to all applicable State and Local Building Codes and shall meet manufacturer's standards of construction and materials. Shelter systems shall be pre-drilled and pre-cut, shipped with all hardware and accessories necessary for complete field assembly.

2.6.1 Framing Systems

Framing system; columns, rafters, ridge, purlins and other structural framing members shall be wood as indicated. Manufacturer shall provide shop drawings and calculations prepared by a structural engineer.

a. Wood framing system shall consist of surfaced four sides (S4S), #1 grade, southern pine, glue-laminated arches manufactured in accordance with AITC 190.1 and AITC certified glue-laminated structural grade southern yellow pine beams, rafters and purlins, factory sealed and individually wrapped for protection during shipment. Factory stain all wood members prior to shipment.

2.6.2 Decking

Provide manufacturer's standard wood decking as indicated. Materials shall be factory finished and shipped with all necessary fasteners and accessories as required for complete site assembly.

2.6.3 Shingles

Shingles are specified in Section 07311 ASPHALT SHINGLES.

PART 3 EXECUTION

3.1 INSTALLATION

The Contractor shall verify that finished grades and other operations affecting mounting surfaces have been completed prior to the installation of site furnishings. Site furnishings shall be installed plumb and true in accordance with the approved manufacturer's instructions.

3.1.1 Omitted

3.1.2 Application of Field Finishes

Where indicated, field finishes shall be applied in accordance with Section 09900 PAINTS AND COATINGS.

3.1.3 Parts

New parts shall be acquired from the manufacturer. Substitute parts will not be accepted unless approved by the manufacturer.

3.1.4 Assembly

When the inspection of parts has been completed, the site furnishings shall be assembled and anchored according to manufacturer's instructions or as indicated. When site furnishings are assembled at the site, assembly shall not interfere with other operations or pedestrian and vehicular circulation.

3.1.5 Testing

Each site furnishing shall be tested to determine a secure and correct installation. A correct installation shall be according to the manufacturer's recommendations and by the following procedure: The Contractor shall measure the physical dimensions and clearance of each installed site furnishing for compliance with manufacturer's recommendations and as indicated. Site furnishings which do not comply shall be reinstalled. Fasteners and anchors determined to be non-compliant shall be replaced. A written report describing the results of the testing shall be provided.

3.2 RESTORATION AND CLEAN UP

When the installation has been completed, the Contractor shall clean up and protect the site. Existing areas that have been damaged from the installation operation shall be restored to original condition at Contractor's expense.

3.2.1 Clean Up

The site shall be cleaned of all materials associated with the installation. Site furnishing surfaces shall be cleaned of dirt, stains, filings, and other blemishes occurring from shipment and installation. Cleaning methods and agents shall be according to manufacturer's instructions or as indicated.

3.2.2 Protection

The area shall be protected as required or directed by providing barricades and signage.

3.2.3 Disposal of Materials

Excess and waste material shall be removed and disposed off Government property.

3.3 RE-INSTALLATION

Where re-installation is required, the following shall be accomplished:

a. Re-install the product as specified. Material acquisition of replacement parts is the responsibility of the Contractor. Provide replacement materials that are new and supplied by the original manufacturer to match.

b. Damage caused by the failed installation shall be repaired.

-- End of Section --

SECTION TABLE OF CONTENTS

DIVISION 02 - SITE CONSTRUCTION

SECTION 02921A

SEEDING

11/02

PART 1 GENERAL

1.1 REFERENCES
1.2 SUBMITTALS
1.3 SOURCE INSPECTION
1.4 DELIVERY, INSPECTION, STORAGE, AND HANDLING
1.4.1 Delivery
1.4.1.1 Delivered Topsoil
1.4.1.2 Soil Amendments
1.4.1.3 Pesticides
1.4.2 Inspection
1.4.3 Storage
1.4.4 Handling

PART 2 PRODUCTS

2.1 SEED
2.1.1 Seed Classification
2.1.2 Permanent Seed Species and Mixtures
2.1.3 Temporary Seed Species
2.1.4 Quality
2.1.5 Seed Mixing
2.1.6 Substitutions
2.2 TOPSOIL
2.3 SOIL AMENDMENTS
2.3.1 pH Adjuster
2.3.1.1 Limestone
2.3.1.2 Hydrated Lime
2.3.1.3 Burnt Lime
2.3.2 Fertilizer
2.3.3 Nitrogen Carrier Fertilizer
2.3.4 Organic Material
2.3.4.1 Bonemeal
2.3.4.2 Rotted Manure
2.3.4.3 Decomposed Wood Derivatives
2.3.4.4 Recycled Compost
2.3.4.5 Worm Castings
2.3.5 Soil Conditioner
2.3.5.1 Sand
2.3.5.2 Super Absorbent Polymers
2.3.5.3 Calcined Clay
2.3.5.4 Gypsum
2.3.5.5 Expanded Shale, Clay, or Slate (ESCS)
2.4 MULCH
2.4.1 Straw
2.4.2 Hay
2.4.3 Wood Cellulose Fiber
2.4.4 Paper Fiber

2.5 OMITTED
2.6 WATER
2.7 PESTICIDE
2.8 SURFACE EROSION CONTROL MATERIAL
2.8.1 Surface Erosion Control Blanket
2.8.2 Surface Erosion Control Fabric
2.8.3 Surface Erosion Control Net
2.8.4 Surface Erosion Control Chemicals
2.8.5 Hydrophilic Colloids
2.8.6 Erosion Control Material Anchors

PART 3 EXECUTION

3.1 INSTALLING SEED TIME AND CONDITIONS
3.1.1 Seeding Time
3.1.2 Seeding Conditions
3.1.3 Equipment Calibration
3.1.4 Soil Test
3.2 SITE PREPARATION
3.2.1 Finished Grade and Topsoil
3.2.2 Application of Soil Amendments
3.2.2.1 Applying pH Adjuster
3.2.2.2 Applying Fertilizer
3.2.2.3 Applying Soil Conditioner
3.2.2.4 Applying Super Absorbent Polymers
3.2.3 Tillage
3.2.4 Prepared Surface
3.2.4.1 Preparation
3.2.4.2 Lawn Area Debris
3.2.4.3 Field Area Debris
3.2.4.4 Protection
3.3 INSTALLATION
3.3.1 Installing Seed
3.3.1.1 Broadcast Seeding
3.3.1.2 Omitted
3.3.1.3 Rolling
3.3.2 Hydroseeding
3.3.3 Mulching
3.3.3.1 Hay or Straw Mulch
3.3.3.2 Mechanical Anchor
3.3.3.3 Omitted
3.3.3.4 Non-Asphaltic Tackifier
3.3.4 Watering Seed
3.4 SURFACE EROSION CONTROL
3.4.1 Surface Erosion Control Material
3.4.2 Temporary Seeding
3.4.2.1 Soil Amendments
3.4.2.2 Remaining Soil Amendments
3.5 QUANTITY CHECK
3.6 APPLICATION OF PESTICIDE
3.6.1 Technical Representative
3.6.2 Application
3.7 RESTORATION AND CLEAN UP
3.7.1 Restoration
3.7.2 Clean Up
3.8 PROTECTION OF INSTALLED AREAS
3.9 SEED ESTABLISHMENT PERIOD
3.9.1 Commencement
3.9.2 Satisfactory Stand of Grass Plants

3.9.2.1 Lawn Area
3.9.2.2 Field Area
3.9.3 Maintenance During Establishment Period
3.9.3.1 Mowing
3.9.3.2 Post-Fertilization
3.9.3.3 Pesticide Treatment
3.9.3.4 Repair or Reinstall
3.9.3.5 Maintenance Record

-- End of Section Table of Contents --

UFGS-02921A (November 2002)

SECTION 02921A

SEEDING
11/02

PART 1 GENERAL

1.1 REFERENCES

The publications listed below form a part of this specification to the extent referenced. The publications are referred to in the text by basic designation only.

AMERICAN SOCIETY FOR TESTING AND MATERIALS (ASTM)

ASTM C 602	(1995a) Agricultural Liming Materials
ASTM D 4972	(1995a) pH of Soils
ASTM D 5268	(1992; R 1996) Topsoil Used for Landscaping Purposes
ASTM D 5883	(1996el) Use of Rotary Kiln Produced Expanded Shale, Clay or Slate (ESCS) as a Mineral Amendment in Topsoil Used for Landscaping and Related Purposes

U.S. DEPARTMENT OF AGRICULTURE (USDA)

AMS Seed Act	(1995) Federal Seed Act Regulations Part 201

1.2 SUBMITTALS

Government approval is required for submittals with a "G" designation; submittals not having a "G" designation are for information only. When used, a designation following the "G" designation identifies the office that will review the submittal for the Government. The following shall be submitted in accordance with Section 01330 SUBMITTAL PROCEDURES:

SD-03 Product Data

Equipment
Surface Erosion Control Material
Chemical Treatment Material

Manufacturer's literature including physical characteristics, application and installation instructions for equipment, surface erosion control material and chemical treatment material.

A listing of equipment to be used for the seeding operation.

Delivery

Delivery schedule.

Finished Grade and Topsoil

Finished grade status.

Topsoil

Availability of topsoil from the stripping and stock piling operation.

Quantity Check

Bag count or bulk weight measurements of material used compared with area covered to determine the application rate and quantity installed.

Seed Establishment Period

Calendar time period for the seed establishment period. When there is more than one seed establishment period, the boundaries of the seeded area covered for each period shall be described.

Maintenance Record

Maintenance work performed, area repaired or reinstalled, diagnosis for unsatisfactory stand of grass plants.

Application of Pesticide

Pesticide treatment plan with sequence of treatment work with dates and times. The pesticide trade name, EPA registration number, chemical composition, formulation, concentration of original and diluted material, application rate of active ingredients, method of application, area treated, amount applied; and the name and state license number of the state certified applicator shall be included.

SD-04 Samples

Delivered Topsoil

Samples taken from several locations at the source.

Soil Amendments

A 10 pound sample.

Mulch

A 10 pound sample.

SD-06 Test Reports

Equipment Calibration

Certification of calibration tests conducted on the equipment used in the seeding operation.

Soil Test

Certified reports of inspections and laboratory tests, prepared by an independent testing agency, including analysis and interpretation of test results. Each report shall be properly identified. Test methods used and compliance with recognized test standards shall be described.

SD-07 Certificates

Seed
Topsoil
pH Adjuster
Fertilizer
Organic Material
Soil Conditioner
Mulch
Pesticide

Prior to the delivery of materials, certificates of compliance attesting that materials meet the specified requirements. Certified copies of the material certificates shall include the following:

a. Seed. Classification, botanical name, common name, percent pure live seed, minimum percent germination and hard seed, maximum percent weed seed content, and date tested.

b. Topsoil. Particle size, pH, organic matter content, textural class, soluble salts, chemical and mechanical analyses.

c. pH Adjuster. Calcium carbonate equivalent and sieve analysis.

d. Fertilizer. Chemical analysis and composition percent.

e. Organic Material: Composition and source.

f. Soil Conditioner: Composition and source.

g. Mulch: Composition and source.

h. Pesticide. EPA registration number and registered uses.

1.3 SOURCE INSPECTION

The source of delivered topsoil shall be subject to inspection.

1.4 DELIVERY, INSPECTION, STORAGE, AND HANDLING

1.4.1 Delivery

A delivery schedule shall be provided at least 10 calendar days prior to the first day of delivery.

1.4.1.1 Delivered Topsoil

Prior to the delivery of any topsoil, its availability shall be verified in paragraph TOPSOIL. A soil test shall be provided for topsoil delivered to the site.

1.4.1.2 Soil Amendments

Soil amendments shall be delivered to the site in the original, unopened containers bearing the manufacturer's chemical analysis. In lieu of containers, soil amendments may be furnished in bulk. A chemical analysis shall be provided for bulk deliveries.

1.4.1.3 Pesticides

Pesticide material shall be delivered to the site in the original, unopened containers bearing legible labels indicating the EPA registration number and the manufacturer's registered uses.

1.4.2 Inspection

Seed shall be inspected upon arrival at the job site for conformity to species and quality. Seed that is wet, moldy, or bears a test date five months or older, shall be rejected. Other materials shall be inspected for compliance with specified requirements. The following shall be rejected: open soil amendment containers or wet soil amendments; topsoil that contains slag, cinders, stones, lumps of soil, sticks, roots, trash or other material over a minimum 1-1/2 inch diameter; and topsoil that contains viable plants and plant parts. Unacceptable materials shall be removed from the job site.

1.4.3 Storage

Materials shall be stored in designated areas. Seed, lime, and fertilizer shall be stored in cool, dry locations away from contaminants. Chemical treatment material shall be stored according to manufacturer's instructions and not with seeding operation materials.

1.4.4 Handling

Except for bulk deliveries, materials shall not be dropped or dumped from vehicles.

PART 2 PRODUCTS

2.1 SEED

2.1.1 Seed Classification

State-certified seed of the latest season's crop shall be provided in original sealed packages bearing the producer's guaranteed analysis for percentages of mixture, purity, germination, hard seed, weed seed content, and inert material. Labels shall be in conformance with AMS Seed Act and applicable state seed laws.

2.1.2 Permanent Seed Species and Mixtures

Permanent seed species and mixtures shall be proportioned by weight as follows:

Botanical Name	Common Name	Mixture Percent by Weight	Percent Pure Live Seed
		LAWN SEED	
Cynodon Dactylon	Bermuda	95	85

Seed mixtures shall not contain millet or any other large-seed producing grass.

2.1.3 Temporary Seed Species

Temporary seed species for surface erosion control or overseeding shall be as follows:

Botanical Name	Common Name	Percent Pure Live Seed
Secale Cerealeorum	Rye Grain	95

Seed mixtures shall not contain millet or any other large-seed producing grass.

2.1.4 Quality

Weed seed shall be a maximum 1 percent by weight of the total mixture.

2.1.5 Seed Mixing

The mixing of seed may be done by the seed supplier prior to delivery, or on site as directed.

2.1.6 Substitutions

Substitutions will not be allowed without written request and approval from the Contracting Officer.

2.2 TOPSOIL

Topsoil shall be as defined in ASTM D 5268. When available, the topsoil shall be the existing surface soil stripped and stockpiled onsite in accordance with Section 02300A EARTHWORK. When additional topsoil is required beyond the available topsoil from the stripping operation, topsoil shall be delivered and amended as recommended by the soil test for the seed specified. Topsoil shall be free from slag, cinders, stones, lumps of soil, sticks, roots, trash or other material over a minimum 1-1/2 inch diameter. Topsoil shall be free from viable plants and plant parts.

2.3 SOIL AMENDMENTS

Soil amendments shall consist of pH adjuster, fertilizer, organic material and soil conditioners meeting the following requirements. Vermiculite shall not be used.

2.3.1 pH Adjuster

The pH adjuster shall be an agricultural liming material in accordance with ASTM C 602. These materials may be burnt lime, hydrated lime, ground limestone, sulfur, or shells. The pH adjuster shall be used to create a favorable soil pH for the plant material specified.

2.3.1.1 Limestone

Limestone material shall contain a minimum calcium carbonate equivalent of 80 percent. Gradation: A minimum 95 percent shall pass through a No. 8 sieve and a minimum 55 percent shall pass through a No. 60 sieve. To raise soil pH, ground limestone shall be used.

2.3.1.2 Hydrated Lime

Hydrated lime shall contain a minimum calcium carbonate equivalent of 110 percent. Gradation: A minimum 100 percent shall pass through a No. 8 sieve and a minimum 97 percent shall pass through a No. 60 sieve.

2.3.1.3 Burnt Lime

Burnt lime shall contain a minimum calcium carbonate equivalent of 140 percent. Gradation: A minimum 95 percent shall pass through a No. 8 sieve and a minimum 35 percent shall pass through a No. 60 sieve.

2.3.2 Fertilizer

The nutrients ratio shall be 3 percent nitrogen, 5 percent phosphorus, and 2 percent potassium. Fertilizer shall be controlled release commercial grade, free flowing, uniform in composition, and consist of a nitrogen-phosphorus-potassium ratio. The fertilizer shall be derived from sulphur coated urea, urea formaldehyde, plastic or polymer coated pills, or isobutylenediurea (IBDU). Fertilizer shall be balanced with the inclusion of trace minerals and micro-nutrients.

2.3.3 Nitrogen Carrier Fertilizer

The nutrients ratio shall be 12 percent nitrogen, 4 percent phosphorus, and 8 percent potassium. Nitrogen carrier fertilizer shall be commercial grade, free flowing, and uniform in composition. The fertilizer may be a liquid nitrogen solution.

2.3.4 Organic Material

Organic material shall consist of either bonemeal, rotted manure, decomposed wood derivatives, recycled compost, or worm castings.

2.3.4.1 Bonemeal

Bonemeal shall be finely ground, steamed bone product containing from 2 to 4 percent nitrogen and 16 to 40 percent phosphoric acid.

2.3.4.2 Rotted Manure

Rotted manure shall be unleached horse, chicken or cattle manure containing a maximum 25 percent by volume of straw, sawdust, or other bedding materials. It shall contain no chemicals or ingredients harmful to plants. The manure shall be heat treated to kill weed seeds and be free of stones,

sticks, and soil.

2.3.4.3 Decomposed Wood Derivatives

Decomposed wood derivatives shall be ground bark, sawdust, yard trimmings, or other wood waste material that is free of stones, sticks, soil, and toxic substances harmful to plants, and is fully composted or stabilized with nitrogen.

2.3.4.4 Recycled Compost

Compost shall be a well decomposed, stable, weed free organic matter source. Compost shall be derived from food; agricultural or industrial residuals; biosolids (treated sewage sludge); yard trimmings; or source-separated or mixed solid waste. The compost shall possess no objectionable odors and shall not resemble the raw material from which it was derived. The material shall not contain substances toxic to plants. Gradation: The compost material shall pass through a 3/8 inch screen, possess a pH of 5.5 to 8.0, and have a moisture content between 35-55 percent by weight. The material shall not contain more than 1 percent by weight of man-made foreign matter. Compost shall be cleaned of plastic materials larger than 2 inches in length. The Contractor shall comply with EPA requirements in accordance with Section 01670 RECYCLED / RECOVERED MATERIALS.

2.3.4.5 Worm Castings

Worm castings shall be screened from worms and food source, and shall be commercially packaged.

2.3.5 Soil Conditioner

Soil conditioner shall be sand, super absorbent polymers, calcined clay, or gypsum for use singly or in combination to meet the requirements of the soil test.

2.3.5.1 Sand

Sand shall be clean and free of toxic materials. Gradation: A minimum 95 percent by weight shall pass a No. 10 sieve and a minimum 10 percent by weight shall pass a No. 16 sieve. Greensand shall be balanced with the inclusion of trace minerals and nutrients.

2.3.5.2 Super Absorbent Polymers

To improve water retention in soils, super absorbent polymers shall be sized and applied according to the manufacturer's recommendations. Polymers shall be added as a soil amendment and be cross-linked polyacrylamide, with an absorption capacity of 250-400 times its weight. Polymers shall also be added to the seed and be a starch grafted polyacrylonitrite, with graphite added as a tacky sticker. It shall have an absorption capacity of 100 plus times its weight.

2.3.5.3 Calcined Clay

Calcined clay shall be granular particles produced from montmorillonite clay calcined to a minimum temperature of 1200 degrees F. Gradation: A minimum 90 percent shall pass a No. 8 sieve; a minimum 99 percent shall be retained on a No. 60 sieve; and a maximum 2 percent shall pass a No. 100

sieve. Bulk density: A maximum 40 pounds per cubic foot.

2.3.5.4 Gypsum

Gypsum shall be commercially packaged, free flowing, and a minimum 95 percent calcium sulfate by volume.

2.3.5.5 Expanded Shale, Clay, or Slate (ESCS)

Rotary kiln produced ESCS material shall be in conformance with ASTM D 5883.

2.4 MULCH

Mulch shall be free from weeds, mold, and other deleterious materials. Mulch materials shall be native to the region.

2.4.1 Straw

Straw shall be stalks from oats, wheat, rye, barley, or rice, furnished in air-dry condition and with a consistency for placing with commercial mulch-blowing equipment.

2.4.2 Hay

Hay shall be native hay, sudan-grass hay, broomsedge hay, or other herbaceous mowings, furnished in an air-dry condition suitable for placing with commercial mulch-blowing equipment.

2.4.3 Wood Cellulose Fiber

Wood cellulose fiber shall not contain any growth or germination-inhibiting factors and shall be dyed an appropriate color to facilitate placement during application. Composition on air-dry weight basis: 9 to 15 percent moisture, pH range from 4.5 to 6.0.

2.4.4 Paper Fiber

Paper fiber mulch shall be recycled news print that is shredded for the purpose of mulching seed.

2.5 OMITTED

2.6 WATER

Water shall be the responsibility of the Contractor, unless otherwise noted. Water shall not contain elements toxic to plant life.

2.7 PESTICIDE

Pesticide shall be insecticide, herbicide, fungicide, nematocide, rodenticide or miticide. For the purpose of this specification, a soil fumigant shall have the same requirements as a pesticide. The pesticide material shall be EPA registered and approved.

2.8 SURFACE EROSION CONTROL MATERIAL

Surface erosion control material shall conform to the following:

2.8.1 Surface Erosion Control Blanket

Blanket shall be machine produced mat of wood excelsior formed from a web of interlocking wood fibers; covered on one side with either knitted straw blanket-like mat construction; covered with biodegradable plastic mesh; or interwoven biodegradable thread, plastic netting, or twisted kraft paper cord netting.

2.8.2 Surface Erosion Control Fabric

Fabric shall be knitted construction of polypropylene yarn with uniform mesh openings 3/4 to 1 inch square with strips of biodegradable paper. Filler paper strips shall have a minimum life of 6 months.

2.8.3 Surface Erosion Control Net

Net shall be heavy, twisted jute mesh, weighing approximately 1.22 pounds per linear yard and 4 feet wide with mesh openings of approximately 1 inch square.

2.8.4 Surface Erosion Control Chemicals

Chemicals shall be high-polymer synthetic resin or cold-water emulsion of selected petroleum resins.

2.8.5 Hydrophilic Colloids

Hydrophilic colloids shall be physiologically harmless to plant and animal life without phytotoxic agents. Colloids shall be naturally occurring, silicate powder based, and shall form a water insoluble membrane after curing. Colloids shall resist mold growth.

2.8.6 Erosion Control Material Anchors

Erosion control anchors shall be as recommended by the manufacturer.

PART 3 EXECUTION

3.1 INSTALLING SEED TIME AND CONDITIONS

3.1.1 Seeding Time

Seed shall be installed from Jan to March for spring establishment; from Jun to Aug for summer establishment; and from Aug to Sept for fall establishment.

3.1.2 Seeding Conditions

Seeding operations shall be performed only during periods when beneficial results can be obtained. When drought, excessive moisture, or other unsatisfactory conditions prevail, the work shall be stopped when directed. When special conditions warrant a variance to the seeding operations, proposed alternate times shall be submitted for approval.

3.1.3 Equipment Calibration

Immediately prior to the commencement of seeding operations, calibration tests shall be conducted on the equipment to be used. These tests shall confirm that the equipment is operating within the manufacturer's

specifications and will meet the specified criteria. The equipment shall be calibrated a minimum of once every day during the operation. The calibration test results shall be provided within 1 week of testing.

3.1.4 Soil Test

Delivered topsoil, existing soil in smooth graded areas, and stockpiled topsoil shall be tested in accordance with ASTM D 5268 and ASTM D 4972 for determining the particle size, pH, organic matter content, textural class, chemical analysis, soluble salts analysis, and mechanical analysis. Sample collection on site shall be random over the entire site. Sample collection for stockpiled topsoil shall be at different levels in the stockpile. The soil shall be free from debris, noxious weeds, toxic substances, or other materials harmful to plant growth. The test shall determine the quantities and type of soil amendments required to meet local growing conditions for the seed species specified.

3.2 SITE PREPARATION

3.2.1 Finished Grade and Topsoil

The Contractor shall verify that finished grades are as indicated on drawings, and the placing of topsoil, smooth grading, and compaction requirements have been completed in accordance with Section 02300A EARTHWORK, prior to the commencement of the seeding operation.

3.2.2 Application of Soil Amendments

3.2.2.1 Applying pH Adjuster

The pH adjuster shall be applied as recommended by the soil test The pH adjuster shall be incorporated into the soil to a maximum 4 inch depth or may be incorporated as part of the tillage operation.

3.2.2.2 Applying Fertilizer

The application rate shall be 90 pounds per 1000 square yards. Fertilizer shall be incorporated into the soil to a maximum 4 inch depth or may be incorporated as part of the tillage operation.

3.2.2.3 Applying Soil Conditioner

The soil conditioner shall be as recommended by the soil test. The soil conditioner shall be spread uniformly over the soil a minimum 1 inch depth and thoroughly incorporated by tillage into the soil to a maximum 4 inch depth.

3.2.2.4 Applying Super Absorbent Polymers

Polymers shall be spread uniformly over the soil as recommended by the manufacturer and thoroughly incorporated by tillage into the soil to a maximum 4 inch depth.

3.2.3 Tillage

Soil on slopes up to a maximum 3-horizontal-to-1-vertical shall be tilled to a minimum 4 inch depth. On slopes between 3-horizontal-to-1-vertical and 1-horizontal-to-1 vertical, the soil shall be tilled to a minimum 2 inch depth by scarifying with heavy rakes, or other method. Rototillers

shall be used where soil conditions and length of slope permit. On slopes 1-horizontal-to-1 vertical and steeper, no tillage is required. Drainage patterns shall be maintained as indicated on drawings. Areas compacted by construction operations shall be completely pulverized by tillage. Soil used for repair of surface erosion or grade deficiencies shall conform to topsoil requirements. The pH adjuster, fertilizer, and soil conditioner may be applied during this procedure.

3.2.4 Prepared Surface

3.2.4.1 Preparation

The prepared surface shall be a maximum 1 inch below the adjoining grade of any surfaced area. New surfaces shall be blended to existing areas. The prepared surface shall be completed with a light raking to remove debris.

3.2.4.2 Lawn Area Debris

Debris and stones over a minimum 5/8 inch in any dimension shall be removed from the surface.

3.2.4.3 Field Area Debris

Debris and stones over a minimum 3 inch in any dimension shall be removed from the surface.

3.2.4.4 Protection

Areas with the prepared surface shall be protected from compaction or damage by vehicular or pedestrian traffic and surface erosion.

3.3 INSTALLATION

Prior to installing seed, any previously prepared surface compacted or damaged shall be reworked to meet the requirements of paragraph SITE PREPARATION. Seeding operations shall not take place when the wind velocity will prevent uniform seed distribution.

3.3.1 Installing Seed

Seeding method shall be Broadcast Seeding. Seeding procedure shall ensure even coverage. Gravity feed applicators, which drop seed directly from a hopper onto the prepared soil, shall not be used because of the difficulty in achieving even coverage, unless otherwise approved. Absorbent polymer powder shall be mixed with the dry seed at the rate recommended by the manufacturer.

3.3.1.1 Broadcast Seeding

Seed shall be uniformly broadcast at the rate of 34 pounds per 1000 square feet using broadcast seeders. Half the total rate of seed application shall be broadcast in 1 direction, with the remainder of the seed rate broadcast at 90 degrees from the first direction. Seed shall be covered a maximum 1/4 inch depth by disk harrow, steel mat drag, cultipacker, or other approved device.

3.3.1.2 Omitted

3.3.1.3 Rolling

The entire area shall be firmed with a roller not exceeding 90 pounds per foot roller width. Slopes over a maximum 3-horizontal-to-1 vertical shall not be rolled. Areas seeded with seed drills equipped with rollers shall not be rolled.

3.3.2 Hydroseeding

Seed shall be mixed to ensure broadcast at the rate of 1/4 pounds per 1000 square feet. Seed and fertilizer shall be added to water and thoroughly mixed to meet the rates specified. The time period for the seed to be held in the slurry shall be a maximum 24 hours. Wood cellulose fiber mulch and tackifier shall be added at the rates recommended by the manufacturer after the seed, fertilizer, and water have been thoroughly mixed to produce a homogeneous slurry. Slurry shall be uniformly applied under pressure over the entire area. The hydroseeded area shall not be rolled.

3.3.3 Mulching

3.3.3.1 Hay or Straw Mulch

Hay or straw mulch shall be spread uniformly at the rate of 2 tons per acre. Mulch shall be spread by hand, blower-type mulch spreader, or other approved method. Mulching shall be started on the windward side of relatively flat areas or on the upper part of steep slopes, and continued uniformly until the area is covered. The mulch shall not be bunched or clumped. Sunlight shall not be completely excluded from penetrating to the ground surface. All areas installed with seed shall be mulched on the same day as the seeding. Mulch shall be anchored immediately following spreading.

3.3.3.2 Mechanical Anchor

Mechanical anchor shall be a V-type-wheel land packer; a scalloped-disk land packer designed to force mulch into the soil surface; or other suitable equipment.

3.3.3.3 Omitted

3.3.3.4 Non-Asphaltic Tackifier

Hydrophilic colloid shall be applied at the rate recommended by the manufacturer, using hydraulic equipment suitable for thoroughly mixing with water. A uniform mixture shall be applied over the area.

3.3.4 Watering Seed

Watering shall be started immediately after completing the seeding of an area. Water shall be applied to supplement rainfall at a rate sufficient to ensure moist soil conditions to a minimum 1 inch depth. Run-off and puddling shall be prevented. Watering trucks shall not be driven over turf areas, unless otherwise directed. Watering of other adjacent areas or plant material shall be prevented.

3.4 SURFACE EROSION CONTROL

3.4.1 Surface Erosion Control Material

Where indicated or as directed, surface erosion control material shall be installed in accordance with manufacturer's instructions. Placement of the material shall be accomplished without damage to installed material or without deviation to finished grade.

3.4.2 Temporary Seeding

The application rate shall be 44 pounds per 1000 square yards. When directed during contract delays affecting the seeding operation or when a quick cover is required to prevent surface erosion, the areas designated shall be seeded in accordance with temporary seed species listed under Paragraph SEED.

3.4.2.1 Soil Amendments

When soil amendments have not been applied to the area, the quantity of 1/2 of the required soil amendments shall be applied and the area tilled in accordance with paragraph SITE PREPARATION. The area shall be watered in accordance with paragraph Watering Seed.

3.4.2.2 Remaining Soil Amendments

The remaining soil amendments shall be applied in accordance with the paragraph Tillage when the surface is prepared for installing seed.

3.5 QUANTITY CHECK

For materials provided in bags, the empty bags shall be retained for recording the amount used. For materials provided in bulk, the weight certificates shall be retained as a record of the amount used. The amount of material used shall be compared with the total area covered to determine the rate of application used. Differences between the quantity applied and the quantity specified shall be adjusted as directed.

3.6 APPLICATION OF PESTICIDE

When application of a pesticide becomes necessary to remove a pest or disease, a pesticide treatment plan shall be submitted and coordinated with the installation pest management program.

3.6.1 Technical Representative

The certified installation pest management coordinator shall be the technical representative, and shall be present at all meetings concerning treatment measures for pest or disease control. They may be present during treatment application.

3.6.2 Application

A state certified applicator shall apply required pesticides in accordance with EPA label restrictions and recommendations. Clothing and personal protective equipment shall be used as specified on the pesticide label. A closed system is recommended as it prevents the pesticide from coming into contact with the applicator or other persons. Water for formulating shall only come from designated locations. Filling hoses shall be fitted with a

backflow preventer meeting local plumbing codes or standards. Overflow shall be prevented during the filling operation. Prior to each day of use, the equipment used for applying pesticide shall be inspected for leaks, clogging, wear, or damage. Any repairs are to be performed immediately. A pesticide plan shall be submitted.

3.7 RESTORATION AND CLEAN UP

3.7.1 Restoration

Existing turf areas, pavements, and facilities that have been damaged from the seeding operation shall be restored to original condition at Contractor's expense.

3.7.2 Clean Up

Excess and waste material shall be removed from the seeded areas and shall be disposed offsite. Adjacent paved areas shall be cleaned.

3.8 PROTECTION OF INSTALLED AREAS

Immediately upon completion of the seeding operation in an area, the area shall be protected against traffic or other use by erecting barricades and providing signage as required, or as directed.

3.9 SEED ESTABLISHMENT PERIOD

3.9.1 Commencement

The seed establishment period to obtain a healthy stand of grass plants shall begin on the first day of seeding work under this contract and shall continue through the remaining life of the contract and end 3 months after the last day of the seeding operation required by this contract. Written calendar time period shall be furnished for the seed establishment period. When there is more than 1 seed establishment period, the boundaries of the seeded area covered for each period shall be described. The seed establishment period shall be coordinated with Section 02921A WEEDING, Sections 02922A SODDING and 02930A EXTERIOR PLANTING. The seed establishment period shall be modified for inclement weather, shut down periods, or for separate completion dates of areas.

3.9.2 Satisfactory Stand of Grass Plants

Grass plants shall be evaluated for species and health when the grass plants are a minimum 1 inch high.

3.9.2.1 Lawn Area

A satisfactory stand of grass plants from the seeding operation for a lawn area shall be a minimum 100 grass plants per square foot. Bare spots shall be a maximum 6 inches square. The total bare spots shall be a maximum 2 percent of the total seeded area.

3.9.2.2 Field Area

A satisfactory stand of grass plants from the seeding operation for a field area shall be a minimum 100 grass plants per square foot. The total bare spots shall not exceed 2 percent of the total seeded area.

3.9.3 Maintenance During Establishment Period

Maintenance of the seeded areas shall include eradicating weeds, insects and diseases; protecting embankments and ditches from surface erosion; maintaining erosion control materials and mulch; protecting installed areas from traffic; mowing; watering; and post-fertilization.

3.9.3.1 Mowing

a. Lawn Areas: Lawn areas shall be mowed to a minimum 3 inch height when the turf is a maximum 4 inches high. Clippings shall be removed when the amount cut prevents sunlight from reaching the ground surface.

b. Field Areas: Field areas shall be mowed once during the season to a minimum 3 inch height. Clippings shall be removed when the amount cut prevents sunlight from reaching the ground surface.

3.9.3.2 Post-Fertilization

The application rate shall be 90 pounds per 1000 square yards. A maximum 1/2 pound per 1000 square feet of actual available nitrogen shall be provided to the grass plants. The application shall be timed prior to the advent of winter dormancy and shall be made without burning the installed grass plants.

3.9.3.3 Pesticide Treatment

Treatment for disease or pest shall be in accordance with paragraph APPLICATION OF PESTICIDE.

3.9.3.4 Repair or Reinstall

Unsatisfactory stand of grass plants and mulch shall be repaired or reinstalled, and eroded areas shall be repaired in accordance with paragraph SITE PREPARATION.

3.9.3.5 Maintenance Record

A record of each site visit shall be furnished, describing the maintenance work performed; areas repaired or reinstalled; and diagnosis for unsatisfactory stand of grass plants.

-- End of Section --

SECTION TABLE OF CONTENTS

DIVISION 02 - SITE CONSTRUCTION

SECTION 02922A

SODDING

07/02

PART 1 GENERAL

1.1 REFERENCES
1.2 SUBMITTALS
1.3 SOURCE INSPECTION
1.4 DELIVERY, INSPECTION, STORAGE, AND HANDLING
1.4.1 Delivery
1.4.1.1 Sod
1.4.1.2 Delivered Topsoil
1.4.1.3 Soil Amendments
1.4.1.4 Pesticides
1.4.2 Inspection
1.4.3 Storage
1.4.3.1 Sod
1.4.3.2 Other Material Storage
1.4.4 Handling
1.4.5 Time Limitation

PART 2 PRODUCTS

2.1 SOD
2.1.1 Sod Classification
2.1.2 Grass Species
2.1.3 Quality
2.1.4 Thickness
2.1.5 Anchors
2.1.6 Substitutions
2.2 TOPSOIL
2.3 SOIL AMENDMENTS
2.3.1 pH Adjuster
2.3.1.1 Limestone
2.3.1.2 Hydrated Lime
2.3.1.3 Burnt Lime
2.3.2 Fertilizer
2.3.3 Nitrogen Carrier Fertilizer
2.3.4 Organic Material
2.3.4.1 Bonemeal
2.3.4.2 Rotted Manure
2.3.4.3 Decomposed Wood Derivatives
2.3.4.4 Recycled Compost
2.3.4.5 Worm Castings
2.3.5 Soil Conditioner
2.3.5.1 Sand
2.3.5.2 Super Absorbent Polymers
2.3.5.3 Calcined Clay
2.3.5.4 Gypsum
2.3.5.5 Expanded Shale, Clay, or Slate (ESCS)
2.4 WATER

2.5 PESTICIDE

PART 3 EXECUTION

3.1 INSTALLING SOD TIME AND CONDITIONS
3.1.1 Sodding Time
3.1.2 Sodding Conditions
3.1.3 Equipment Calibration
3.1.4 Soil Test
3.2 SITE PREPARATION
3.2.1 Finished Grade and Topsoil
3.2.1.1 Finished Grade for Airfields
3.2.2 Application of Soil Amendments
3.2.2.1 Applying pH Adjuster
3.2.2.2 Applying Fertilizer
3.2.2.3 Applying Soil Conditioner
3.2.2.4 Applying Super Absorbent Polymers
3.2.3 Tillage
3.2.4 Prepared Surface
3.2.4.1 Preparation
3.2.4.2 Protection
3.3 INSTALLATION
3.3.1 Installing Sod
3.3.2 Finishing
3.3.3 Rolling
3.3.4 Watering Sod
3.4 TEMPORARY SEEDING
3.4.1 Soil Amendments, Tillage and Watering
3.4.2 Remaining Soil Amendments
3.5 QUANTITY CHECK
3.6 APPLICATION OF PESTICIDE
3.6.1 Technical Representative
3.6.2 Application
3.7 RESTORATION AND CLEAN UP
3.7.1 Restoration
3.7.2 Clean Up
3.8 PROTECTION OF INSTALLED AREAS
3.9 SOD ESTABLISHMENT PERIOD
3.9.1 Commencement
3.9.2 Satisfactory Stand of Grass Plants
3.9.3 Maintenance During Establishment Period
3.9.3.1 Mowing
3.9.3.2 Post-Fertilization
3.9.3.3 Pesticide Treatment
3.9.3.4 Repair
3.9.3.5 Maintenance Record

-- End of Section Table of Contents --

UFGS-02922A (July 2002)

SECTION 02922A

SODDING
07/02

PART 1 GENERAL

1.1 REFERENCES

AMERICAN SOCIETY FOR TESTING AND MATERIALS (ASTM)

ASTM C 602	(1995a; R 2001) Agricultural Liming Materials
ASTM D 4972	(2001) pH of Soils
ASTM D 5268	(1992; R 1997) Topsoil Used for Landscaping Purposes
ASTM D 5883	(1996el) Use of Rotary Kiln Produced Expanded Shale, Clay or Slate (ESCS) as a Mineral Amendment in Topsoil Used for Landscaping and Related Purposes

1.2 SUBMITTALS

Government approval is required for submittals with a "G" designation; submittals not having a "G" designation are for information only. When used, a designation following the "G" designation identifies the office that will review the submittal for the Government. The following shall be submitted in accordance with Section 01330 SUBMITTAL PROCEDURES:

SD-03 Product Data

Equipment
Chemical Treatment Material

A listing of equipment to be used for the sodding operation. Manufacturer's literature including physical characteristics, application and installation instructions for equipment and chemical treatment material.

Delivery

Delivery schedule.

Finished Grade and Topsoil

Finished grade status.

Topsoil

Availability of topsoil from the stripping and stock piling operation.

Quantity Check

Bag count or bulk weight measurements of material used compared with area covered to determine the application rate and quantity installed. The quantity of sod used shall be compared against the total area installed.

Sod Establishment Period

Calendar time period for the sod establishment period. When there is more than one sod establishment period, the boundaries of the sodded area covered for each period shall be described.

Maintenance Record

Maintenance work performed, area repaired or reinstalled, diagnosis for unsatisfactory stand of grass plants.

Application of Pesticide

Pesticide treatment plan with sequence of treatment work with dates and times. The pesticide trade name, EPA registration number, chemical composition, formulation, concentration of original and diluted material, application rate of active ingredients, method of application, area treated, amount applied; and the name and state license number of the state certified applicator shall be included.

SD-04 Samples

Delivered Topsoil

Samples taken from several locations at the source.

Soil Amendments

A 10 pound sample.

Temporary Seeding

Sample of annual seed species and application rate.

SD-06 Test Reports

Equipment Calibration

Certification of calibration tests conducted on the equipment used in the sodding operation.

Soil Test

Certified reports of inspections and laboratory tests, prepared by an independent testing agency, including analysis and interpretation of test results. Each report shall be properly identified. Test methods used and compliance with recognized test standards shall be described.

SD-07 Certificates

Sod
Topsoil
pH Adjuster
Fertilizer
Organic Material
Soil Conditioner
Pesticide

Prior to the delivery of materials, certificates of compliance attesting that materials meet the specified requirements. Certified copies of the material certificates shall include the following:

a. Sod. Classification, botanical name, common name, mixture percentage of species, percent purity, quality grade, field location and state certification.

b. Topsoil. Particle size, pH, organic matter content, textural class, soluble salts, chemical and mechanical analyses.

c. pH Adjuster. Calcium carbonate equivalent and sieve analysis.

d. Fertilizer. Chemical analysis and composition percent.

e. Organic Material: Composition and source.

f. Soil Conditioner: Composition and source.

g. Pesticide. EPA registration number and registered uses.

1.3 SOURCE INSPECTION

The sources of sod material and delivered topsoil shall be subject to inspection.

1.4 DELIVERY, INSPECTION, STORAGE, AND HANDLING

1.4.1 Delivery

A delivery schedule shall be provided at least 10 calendar days prior to the first day of delivery.

1.4.1.1 Sod

Sod shall be protected during delivery to prevent desiccation, internal heat buildup, or contamination.

1.4.1.2 Delivered Topsoil

Prior to the delivery of any topsoil, its availability shall be verified in paragraph TOPSOIL. A soil test shall be provided for topsoil delivered to the site.

1.4.1.3 Soil Amendments

Soil amendments shall be delivered to the site in the original, unopened containers bearing the manufacturer's chemical analysis. In lieu of containers, soil amendments may be furnished in bulk. A chemical analysis

shall be provided for bulk deliveries.

1.4.1.4 Pesticides

Pesticide material shall be delivered to the site in the original, unopened containers bearing legible labels indicating the EPA registration number and the manufacturer's registered uses.

1.4.2 Inspection

Sod shall be inspected upon arrival at the job site for conformity to species. Sod shall be checked for visible broadleaf weeds, and a visible consistency with no obvious patches of foreign grasses that exceed 2 percent of the canopy. Sod that is heating up, dry, moldy, yellow, irregularly shaped, torn, or of uneven thickness shall be rejected. Other materials shall be inspected for compliance with specified requirements. Open soil amendment containers or wet soil amendments; topsoil that contains slag, cinders, stones, lumps of soil, sticks, roots, trash or other material over a minimum 1-1/2 inch diameter; and topsoil that contains viable plants and plant parts, shall be rejected. Unacceptable materials shall be removed from the job site.

1.4.3 Storage

1.4.3.1 Sod

Sod shall be stored in designated areas and kept in a moist condition by watering with a fine mist, and covered with moist burlap, straw, or other covering. Covering shall allow air to circulate, preventing internal heat from building up. Sod shall be protected from exposure to wind and direct sunlight until installed.

1.4.3.2 Other Material Storage

Materials shall be stored in designated areas. Lime and fertilizer shall be stored in cool, dry locations, away from contaminants. Chemical treatment material shall be stored according to manufacturer's instructions and not with sod operation materials.

1.4.4 Handling

Sod shall not be damaged during handling. Except for bulk deliveries, materials shall not be dropped or dumped from vehicles.

1.4.5 Time Limitation

Time limitation between harvesting and installing sod shall be a maximum 36 hours.

PART 2 PRODUCTS

2.1 SOD

2.1.1 Sod Classification

State-certified sod shall be provided as classified by applicable state laws. Sod section shall be sized to permit rolling and lifting without breaking.

2.1.2 Grass Species

Grass species shall be proportioned as follows:

Botanical Name	Common Name	Mixture Percent
EREMOCHLOA OPHIUROIDES	CENTIPEDE	95

2.1.3 Quality

Sod shall be relatively free of thatch, diseases, nematodes, soil-borne insects, weeds or undesirable plants, stones larger than 1 inch in diameter, woody plant roots, and other materials detrimental to a healthy stand of grass plants. Broadleaf weeds and patches of foreign grasses shall be a maximum 2 percent of the sod section.

2.1.4 Thickness

Sod shall be machine cut to a minimum 1-3/8 inch thickness. Measurement for thickness shall exclude top growth and thatch.

2.1.5 Anchors

Sod anchors shall be as recommended by the sod supplier.

2.1.6 Substitutions

Substitutions will not be allowed without written request and approval from the Contracting Officer.

2.2 TOPSOIL

Topsoil shall be as defined in ASTM D 5268. When available, the topsoil shall be the existing surface soil stripped and stockpiled onsite in accordance with Section 02300A EARTHWORK. When additional topsoil is required beyond the available topsoil from stripping operation, topsoil shall be delivered and amended as recommended by the soil test for the sod species specified. Topsoil shall be free from slag, cinders, stones, lumps of soil, sticks, roots, trash, or other material over a maximum 1-1/2 inch diameter. Topsoil shall be free from viable plants and plant parts.

2.3 SOIL AMENDMENTS

Soil amendments shall consist of pH adjuster, fertilizer, organic material, and soil conditioners meeting the following requirements. Vermiculite shall not be used.

2.3.1 pH Adjuster

The pH adjuster shall be an agricultural liming material in accordance with ASTM C 602. These materials may be burnt lime, hydrated lime, ground limestone, or shells. The pH adjuster shall be used to create a favorable soil pH for the plant material specified.

2.3.1.1 Limestone

Limestone material shall contain a minimum calcium carbonate equivalent of

80 percent. Gradation: A minimum 95 percent shall pass through a No. 8 sieve and a minimum 55 percent shall pass through a No. 60 sieve. To raise soil pH, ground limestone shall be used.

2.3.1.2 Hydrated Lime

Hydrated lime shall contain a minimum calcium carbonate equivalent of 110 percent. Gradation: A minimum 100 percent shall pass through a No. 8 sieve and a minimum 97 percent shall pass through a No. 60 sieve.

2.3.1.3 Burnt Lime

Burnt lime shall contain a minimum calcium carbonate equivalent of 140 percent. Gradation: A minimum 95 percent shall pass through a No. 8 sieve and a minimum 35 percent shall pass through a No. 60 sieve.

2.3.2 Fertilizer

It shall be as recommended by the soil test. Fertilizer shall be controlled release commercial grade, free flowing, uniform in composition, and consist of a nitrogen-phosphorus-potassium ratio. The fertilizer shall be derived from sulphur coated urea, urea formaldehyde, plastic or polymer coated pills, or isobutylenediurea (IBDU). Fertilizer shall be balanced with the inclusion of trace minerals and micro-nutrients.

2.3.3 Nitrogen Carrier Fertilizer

The nutrients ratio shall be 12 percent nitrogen, 4 percent phosphorus, and 8 percent potassium. Nitrogen carrier fertilizer shall be commercial grade, free flowing, and uniform in composition. The fertilizer may be a liquid nitrogen solution.

2.3.4 Organic Material

Organic material shall consist of either bonemeal, rotted manure, decomposed wood derivatives, recycled compost, or worm castings.

2.3.4.1 Bonemeal

Bonemeal shall be finely ground, steamed bone product containing from 2 to 4 percent nitrogen and 16 to 40 percent phosphoric acid.

2.3.4.2 Rotted Manure

Rotted manure shall be unleached horse, chicken or cattle manure containing a maximum 25 percent by volume straw, sawdust, or other bedding materials. Manure shall contain no chemicals or ingredients harmful to plants. The manure shall be heat treated to kill weed seeds and be free of stones, sticks, and soil.

2.3.4.3 Decomposed Wood Derivatives

Decomposed wood derivatives shall be ground bark, sawdust, yard trimmings, or other wood waste material free of stones, sticks, soil, and toxic substances harmful to plants, fully composted or stabilized with nitrogen.

2.3.4.4 Recycled Compost

Compost shall be a well decomposed, stable, weed free organic matter

source. Compost shall be derived from food; agricultural or industrial residuals; biosolids (treated sewage sludge); yard trimmings; or source-separated or mixed solid waste. The compost shall possess no objectionable odors and shall not resemble the raw material from which it was derived. The material shall not contain substances toxic to plants. Gradation: The compost material shall pass through a 3/8 inch screen, possess a pH of 5.5 to 8.0, and have a moisture content between 35-55 percent by weight. The material shall not contain more than 1 percent or less by weight of man-made foreign matter. Compost shall be cleaned of plastic materials larger than 2 inches in length. The Contractor shall comply with EPA requirements in accordance with Section 01670 RECYCLED / RECOVERED MATERIALS.

2.3.4.5 Worm Castings

Worm castings shall be screened from worms and food source, and shall be commercially packaged.

2.3.5 Soil Conditioner

Soil conditioner shall be sand, super absorbent polymers, calcined clay, or gypsum for use singly or in combination to meet the requirements for topsoil.

2.3.5.1 Sand

Sand shall be clean and free of toxic materials. Gradation: A minimum 95 percent by weight shall pass a No. 10 sieve and a minimum 10 percent by weight shall pass a No. 16 sieve. Greensand shall be balanced with the inclusion of trace minerals and nutrients.

2.3.5.2 Super Absorbent Polymers

To improve water retention in soils, super absorbent polymers shall be sized and applied according to the manufacturer's recommendations. Polymers shall be added as a soil amendment and be cross-linked polyacrylamide with an absorption capacity of 250-400 times its weight.

2.3.5.3 Calcined Clay

Calcined clay shall be granular particles produced from montmorillonite clay calcined to minimum temperature of 1200 degrees F. Gradation: A minimum 90 percent passing No. 8 sieve; a minimum 99 percent shall be retained on a No. 60 sieve; and a maximum 2 percent shall pass a No. 100 sieve. Bulk density: A maximum 40 pounds per cubic foot.

2.3.5.4 Gypsum

Gypsum shall be commercially packaged, free flowing, and a minimum 95 percent calcium sulfate by volume.

2.3.5.5 Expanded Shale, Clay, or Slate (ESCS)

Rotary kiln produced ESCS material shall be in conformance with ASTM D 5883.

2.4 WATER

Water shall be the responsibility of the Contractor unless otherwise noted. Water shall not contain elements toxic to plant life.

2.5 PESTICIDE

Pesticide shall be insecticide, herbicide, fungicide, nematocide, rodenticide or miticide. For the purpose of this specification, a soil fumigant shall have the same requirements as a pesticide. The pesticide material shall be EPA registered and approved.

PART 3 EXECUTION

3.1 INSTALLING SOD TIME AND CONDITIONS

3.1.1 Sodding Time

Sod shall be installed from March 15 through September 15.

3.1.2 Sodding Conditions

Sodding operations shall be performed only during periods when beneficial results can be obtained. When drought, excessive moisture or other unsatisfactory conditions prevail, the work shall be stopped when directed. When special conditions warrant a variance to the sodding operations, proposed alternate times shall be submitted for approval.

3.1.3 Equipment Calibration

Immediately prior to the commencement of sodding operations, calibration tests shall be conducted on the equipment to be used. These tests shall confirm that the equipment is operating within the manufacturer's specifications and will meet the specified criteria. The equipment shall be calibrated a minimum of once every day during the operation. Provide calibration test results within one week of testing.

3.1.4 Soil Test

Delivered topsoil, existing soil in smooth graded areas, and stockpiled topsoil shall be tested in accordance with ASTM D 5268 and ASTM D 4972 for determining the particle size, pH, organic matter content, textural class, chemical analysis, soluble salts analysis, and mechanical analysis. Sample collection on site shall be random over the entire site. Sample collection for stockpiled topsoil shall be at different levels in the stockpile. The soil shall be free from debris, noxious weeds, toxic substances, or other materials harmful to plant growth. The test shall determine the quantities and type of soil amendments required to meet local growing conditions for the sod species specified.

3.2 SITE PREPARATION

3.2.1 Finished Grade and Topsoil

Prior to the commencement of the sodding operation, the Contractor shall verify that finished grades are as indicated on drawings; the placing of topsoil, smooth grading, and compaction requirements have been completed in accordance with Section 02300A EARTHWORK.

3.2.1.1 Finished Grade for Airfields

Finished grades in sodded areas shall be undercut sufficiently so the top of newly laid sod will be 1-1/2 inches below adjacent paved areas and flush

with any adjacent seeded or turfed areas except when directed otherwise by the Contracting Officer.

3.2.2 Application of Soil Amendments

3.2.2.1 Applying pH Adjuster

The pH adjuster shall be applied at the rate recommended by the soil test. The pH adjuster shall be incorporated into the soil to a maximum 4 inch depth or may be incorporated as part of the tillage operation.

3.2.2.2 Applying Fertilizer

The fertilizer shall be applied at the rate recommended by the soil test. Fertilizer shall be incorporated into the soil to a maximum 4 inch depth or may be incorporated as part of the tillage or hydroseeding operation.

3.2.2.3 Applying Soil Conditioner

The soil conditioner shall be as recommended by the soil test. The soil conditioner shall be spread uniformly over the soil a minimum 1 inch depth and thoroughly incorporated by tillage into the soil to a maximum 4 inches depth.

3.2.2.4 Applying Super Absorbent Polymers

Polymers shall be spread uniformly over the soil as recommended by the manufacturer and thoroughly incorporated by tillage into the soil to a maximum 2 inches deep prior to placement of sod.

3.2.3 Tillage

Soil on slopes up to a maximum 3-horizontal-to-1-vertical shall be tilled to a minimum 4 inches deep. On slopes between 3-horizontal-to-1-vertical and 1-horizontal-to-1 vertical, the soil shall be tilled to a minimum 2 inches deep by scarifying with heavy rakes, or other method. Rototillers shall be used where soil conditions and length of slope permit. On slopes 1-horizontal-to-1 vertical and steeper, no tillage is required. Drainage patterns shall be maintained as indicated on drawings. Areas compacted by construction operations shall be completely pulverized by tillage. Soil used for repair of surface erosion or grade deficiencies shall conform to topsoil requirements. The pH adjuster, fertilizer, and soil conditioner may be applied during this procedure.

3.2.4 Prepared Surface

3.2.4.1 Preparation

The prepared surface shall be a maximum 1 inch below the adjoining grade of any surfaced area. New surfaces shall be blended to existing areas. The prepared surface shall be rolled and completed with a light raking to remove from the surface debris and stones over a minimum 5/8 inch in any dimension.

3.2.4.2 Protection

Areas within the prepared surface shall be protected from compaction or damage by vehicular or pedestrian traffic and surface erosion.

3.3 INSTALLATION

Prior to installing sod, any previously prepared surface compacted or damaged shall be reworked to meet the requirements of paragraph SITE PREPARATION. Areas shall be sodded as indicated. Adequate soil moisture shall be ensured prior to sodding by spraying water on the area to be sodded and wetting the soil to a maximum 1 inch depth.

3.3.1 Installing Sod

Rows of sod sections shall be placed parallel to and tightly against each other. Joints shall be staggered laterally. The sod sections shall not be stretched or overlapped. All joints shall be butted tight. Voids and air drying of roots shall be prevented. Sod sections shall be laid across the slope on long slopes. Sod sections shall be laid at right angles to the flow of water in ditches. Sod sections shall be anchored on slopes steeper than 3-horizontal-to-1-vertical. Anchoring may be required when surface weight or pressure upon placed sod sections is anticipated to cause lateral movement. Sod anchors shall be placed a minimum 2 feet on center with a minimum 2 anchors per sod section.

3.3.2 Finishing

Displacement of the sod shall be prevented by tamping or rolling the sod in place and knitting the sod to the soil. Air pockets shall be eliminated and a true and even surface shall be provided. Frayed edges shall be trimmed, and holes or missing corners shall be patched with sod.

3.3.3 Rolling

The entire area shall be firmed with a roller not exceeding 90 pounds per foot roller width. Slopes over a maximum 3-horizontal-to-1 vertical shall not be rolled.

3.3.4 Watering Sod

Watering shall be started immediately after completing each day of installing sod. Water shall be applied at least 3 times per week to supplement rainfall, at a rate sufficient to ensure moist soil conditions to a minimum depth of 1 inch. Run-off, puddling, and wilting shall be prevented. Unless otherwise directed, watering trucks shall not be driven over turf areas. Watering of other adjacent areas or plant material shall be prevented.

3.4 TEMPORARY SEEDING

The application rate shall be 44 pounds per 1000 square yards. When directed during contract delays affecting the sodding operation or when a quick cover is required to prevent surface erosion, the areas designated shall be seeded with annual seed in accordance with Section 02921A SEEDING. When there is no Section 02921A SEEDING provided in the project, an annual seed species and application rate shall be submitted for approval.

3.4.1 Soil Amendments, Tillage and Watering

When soil amendments have not been applied to the area, the quantity of 1/2 of the required soil amendments shall be applied and the area tilled in accordance with paragraph SITE PREPARATION. The area shall be watered in accordance with paragraph Watering Sod as required.

3.4.2 Remaining Soil Amendments

The remaining soil amendments shall be applied in accordance with the paragraph Tillage when the surface is prepared for installing sod.

3.5 QUANTITY CHECK

For materials provided in bags, the empty bags shall be retained for recording the amount used. For materials provided in bulk, the weight certificates shall be retained as a record of the amount used. The amount of the material used shall be compared with the total area covered to determine the rate of application. The quantity of sod used shall be compared against the total area established with sod. Differences between the quantity applied and the quantity specified shall be adjusted as directed.

3.6 APPLICATION OF PESTICIDE

When application of a pesticide becomes necessary to remove a pest or disease, a pesticide treatment plan shall be submitted and coordinated with the installation pest management program.

3.6.1 Technical Representative

The certified installation pest management coordinator shall be the technical representative, and shall be present at all meetings concerning treatment measures for pest or disease control. They may be present during treatment application.

3.6.2 Application

A state certified applicator shall apply required pesticides in accordance with EPA label restrictions and recommendations. Clothing and personal protective equipment shall be used as specified on the pesticide label. A closed system is recommended as it prevents the pesticide from coming into contact with the applicator or other persons. Water for formulating shall only come from designated locations. Filling hoses shall be fitted with a backflow preventer meeting local plumbing codes or standards. Overflow shall be prevented during the filling operation. Prior to each day of use, the equipment used for applying pesticide shall be inspected for leaks, clogging, wear, or damage. Any repairs are to be performed immediately.

3.7 RESTORATION AND CLEAN UP

3.7.1 Restoration

Existing turf areas, pavements, and facilities that have been damaged from the sodding operation shall be restored to original condition at Contractor's expense.

3.7.2 Clean Up

Excess and waste material shall be removed from the sodded areas and shall be disposed offsite. Adjacent paved areas shall be cleaned.

3.8 PROTECTION OF INSTALLED AREAS

Immediately upon completion of the sodding operation in an area, the area

shall be protected against traffic or other use by erecting barricades and providing signage as required, or as directed.

3.9 SOD ESTABLISHMENT PERIOD

3.9.1 Commencement

The sod establishment period to obtain a healthy stand of grass plants shall commence on the first day of sodding work under this contract and shall continue through the remaining life of the contract and end 3 months after the last day of sodding operation required by this contract. Written calendar time period shall be furnished for the sod establishment period. When there is more than 1 sod establishment period, the boundaries of the sodded area covered for each period shall be described. The sod establishment period should be coordinated with Sections 02921A SEEDING, and 02930A EXTERIOR PLANTING. The sod establishment period shall be modified for inclement weather, shut down periods, or for separate completion dates of areas.

3.9.2 Satisfactory Stand of Grass Plants

Grass plants shall be evaluated for species and health. A satisfactory stand of grass plants from the sodding operation shall be living sod uniform in color and leaf texture. Bare spots shall be a maximum 2 inch square. Joints between sod pieces shall be tight and free from weeds and other undesirable growth.

3.9.3 Maintenance During Establishment Period

Maintenance of the sodded areas shall include eradicating weeds, insects and diseases; protecting embankments and ditches from surface erosion; maintaining erosion control materials and mulch; protecting installed areas from traffic; mowing; watering; and post-fertilization.

3.9.3.1 Mowing

Sodded areas shall be mowed to a minimum 1 inch height when the turf is a maximum 3 inch height. Clippings shall be removed when the amount cut prevents sunlight from reaching the ground surface.

3.9.3.2 Post-Fertilization

The fertilizer shall be applied as recommended by the soil test. A maximum 90 pounds per 1000 square feet of actual available nitrogen shall be provided to the grass plants. The application shall be timed prior to the advent of winter dormancy and shall be made without burning the installed grass plants.

3.9.3.3 Pesticide Treatment

Treatment for disease or pest shall be in accordance with paragraph APPLICATION OF PESTICIDE.

3.9.3.4 Repair

Unsatisfactory stand of grass plants shall be repaired or reinstalled, and eroded areas shall be repaired in accordance with paragraph SITE PREPARATION.

3.9.3.5 Maintenance Record

A record of each site visit shall be furnished which describes the maintenance work performed; areas repaired or reinstalled; and diagnosis for unsatisfactory stand of grass plants.

-- End of Section --

SECTION TABLE OF CONTENTS

DIVISION 02 - SITE CONSTRUCTION

SECTION 02930A

EXTERIOR PLANTING

01/02

PART 1 GENERAL

1.1 REFERENCES
1.2 SUBMITTALS
1.3 SOURCE INSPECTIONS
1.4 DELIVERY, INSPECTION, STORAGE, AND HANDLING
1.4.1 Delivery
1.4.1.1 Plant Material Identification
1.4.1.2 Protection During Delivery
1.4.1.3 Delivered Topsoil
1.4.1.4 Soil Amendments
1.4.1.5 Pesticide Material
1.4.2 Inspection
1.4.3 Storage
1.4.3.1 Plant Material Storage
1.4.3.2 Other Material Storage
1.4.4 Handling
1.4.5 Time Limitation
1.5 WARRANTY

PART 2 PRODUCTS

2.1 PLANT MATERIAL
2.1.1 Plant Material Classification
2.1.2 Plant Schedule
2.1.3 Substitutions
2.1.4 Quality
2.1.5 Growing Conditions
2.1.6 Method of Shipment to Maintain Health of Root System
2.1.6.1 Balled and Burlapped (BB) Plant Material
2.1.6.2 Balled and Potted (Pot) Plant Material
2.1.6.3 Balled and Platform (BP) Plant Material
2.1.6.4 Bare-Root (BR) Plant Material
2.1.6.5 Container-Grown (C) Plant Material
2.1.7 Growth of Trunk and Crown
2.1.7.1 Deciduous Trees
2.1.7.2 Palms
2.1.7.3 Deciduous Shrubs
2.1.7.4 Coniferous Evergreen Plant Material
2.1.7.5 Broadleaf Evergreen Plant Material
2.1.7.6 Ground Cover and Vine Plant Material
2.1.8 Plant Material Size
2.1.9 Plant Material Measurement
2.2 TOPSOIL
2.3 SOIL AMENDMENTS
2.3.1 pH Adjuster
2.3.1.1 Limestone
2.3.1.2 Hydrated Lime

2.3.1.3 Burnt Lime
2.3.2 Fertilizer
2.3.3 Organic Material
2.3.3.1 Bonemeal
2.3.3.2 Rotted Manure
2.3.3.3 Decomposed Wood Derivatives
2.3.3.4 Recycled Compost
2.3.3.5 Worm Castings
2.3.4 Soil Conditioner
2.3.4.1 Sand
2.3.4.2 Super Absorbent Polymers
2.3.4.3 Calcined Clay
2.3.4.4 Gypsum
2.3.4.5 Expanded Shale, Clay, or Slate (ESCS)
2.4 MULCH
2.4.1 Inorganic Mulch
2.4.2 Organic Mulch
2.4.2.1 Recycled Mulch
2.4.2.2 Shredded Bark
2.4.2.3 Wood Chips and Ground Bark
2.5 GEOTEXTILE
2.6 OMITTED
2.7 OMITTED
2.8 OMITTED
2.9 OMITTED
2.10 OMITTED
2.11 TREE ROOT BARRIERS
2.12 MYCORRHIZAL FUNGI INOCULUM
2.13 WATER
2.14 PESTICIDE
2.15 IRRIGATION DRIP BAG

PART 3 EXECUTION

3.1 INSTALLING PLANT MATERIAL TIME AND CONDITIONS
3.1.1 Deciduous Plant Material Time
3.1.2 Evergreen Plant Material Time
3.1.3 Plant Material Conditions
3.1.4 Tests
3.1.4.1 Percolation Test
3.1.4.2 Soil Test
3.2 SITE PREPARATION
3.2.1 Finished Grade, Topsoil and Underground Utilities
3.2.2 Layout
3.2.3 Protecting Existing Vegetation
3.3 EXCAVATION
3.3.1 Obstructions Below Ground
3.3.2 Turf Removal
3.3.3 Plant Pits
3.4 INSTALLATION
3.4.1 Setting Plant Material
3.4.1.1 Bare-Root Plant Material
3.4.2 Tree Root Barrier
3.4.3 Backfill Soil Mixture
3.4.4 Adding Mycorrhizal Fungi Inoculum
3.4.5 Backfill Procedure
3.4.5.1 Balled and Burlapped, and Balled and Platformed Plant Material
3.4.5.2 Bare-Root Plant Material

3.4.5.3 Container-Grown and Balled and Potted Plant Material
3.4.5.4 Earth Berm
3.4.6 Plant Bed
3.4.7 Watering
3.4.8 Tree Watering
3.5 FINISHING
3.5.1 Plant Material
3.5.2 Placing Geotextile
3.5.3 Placing Mulch
3.5.4 Pruning
3.6 MAINTENANCE DURING PLANTING OPERATION
3.7 APPLICATION OF PESTICIDE
3.7.1 Technical Representative
3.7.2 Application
3.8 RESTORATION AND CLEAN UP
3.8.1 Restoration
3.8.2 Clean Up
3.9 PLANT ESTABLISHMENT PERIOD
3.9.1 Commencement
3.9.2 Maintenance During Establishment Period
3.9.2.1 Watering Plant Material
3.9.2.2 Weeding
3.9.2.3 Pesticide Treatment
3.9.2.4 Post-Fertilization
3.9.2.5 Plant Pit Settling
3.9.2.6 Maintenance Record
3.9.3 Unhealthy Plant Material
3.9.4 Replacement Plant Material
3.9.5 Maintenance Instructions

-- End of Section Table of Contents --

UFGS-02930A (January 2002)

SECTION 02930A

EXTERIOR PLANTING
01/02

PART 1 GENERAL

1.1 REFERENCES

The publications listed below form a part of this specification to the extent referenced. The publications are referred to in the text by basic designation only.

AMERICAN NATIONAL STANDARDS INSTITUTE (ANSI)

ANSI A300	(1995) Tree Care Operations - Trees, Shrubs and Other Woody Plant Maintenance

AMERICAN NURSERY AND LANDSCAPE ASSOCIATION (ANLA)

ANLA Z60.1	(1996) Nursery Stock

AMERICAN SOCIETY FOR TESTING AND MATERIALS (ASTM)

ASTM C 602	(1995a) Agricultural Liming Materials
ASTM D 4972	(1995a) pH of Soils
ASTM D 5034	(1995) Breaking Strength and Elongation of Textile Fabrics (Grab Test)
ASTM D 5035	(1995) Breaking Force and Elongation of Textile Fabrics (Strip Method)
ASTM D 5268	(1992; R 1996) Topsoil Used for Landscaping Purposes
ASTM D 5883	(1996el) Use of Rotary Kiln Produced Expanded Shale, Clay or Slate (ESCS) as a Mineral Amendment in Topsoil Used for Landscaping and Related Purposes

1.2 SUBMITTALS

Government approval is required for submittals with a "G" designation; submittals not having a "G" designation are for information only. When used, a designation following the "G" designation identifies the office that will review the submittal for the Government. The following shall be submitted in accordance with Section 01330 SUBMITTAL PROCEDURES:

SD-02 Shop Drawings

Shop Drawings

Scale drawings defining areas to receive plant materials.

Finished Grade, Topsoil and Underground Utilities

Finished grade status; location of underground utilities and facilities; and availability of topsoil from the stripping and stock piling operation.

SD-03 Product Data

Geotextile
Chemical Treatment Material

Manufacturer's literature including physical characteristics, application and installation instructions for geotextile and chemical treatment material.

Equipment

A listing of equipment to be used for the planting operation.

Delivery

Delivery schedule.

Plant Establishment Period

Calendar time period for the plant establishment period. When there is more than one establishment period, the boundaries of the planted areas covered for each period shall be described.

Maintenance Record

Maintenance work performed, quantity of plant losses, and replacements; and diagnosis of unhealthy plant material.

Application of Pesticide

Pesticide treatment plan with sequence of treatment work with dates and times. The pesticide trade name, EPA registration number, chemical composition, formulation, concentration of original and diluted material, application rate of active ingredients, method of application, area treated, amount applied; and the name and state license number of the state certified applicator shall be included.

SD-04 Samples

Delivered Topsoil

Samples taken from several locations at the source.

Soil Amendments

A 10 pound sample.

Mulch

A 10 pound sample.

Geotextile

A 6 inch square sample.

SD-06 Test Reports

Soil Test
Percolation Test

Certified reports of inspections and laboratory tests, prepared by an independent testing agency, including analysis and interpretation of test results. Each report shall be properly identified. Test methods used and compliance with recognized test standards shall be described.

SD-07 Certificates

Plant Material
Topsoil
pH Adjuster
Fertilizer
Organic Material
Soil Conditioner
Organic Mulch
Mycorrhizal Fungi Inoculum
Pesticide

Prior to delivery of materials, certificates of compliance attesting that materials meet the specified requirements. Certified copies of the material certificates shall include the following.

a. Plant Material: Classification, botanical name, common name, size, quantity by species, and location where grown.

b. Topsoil: Particle size, pH, organic matter content, textural class, soluble salts, chemical and mechanical analyses.

c. pH Adjuster: Sieve analysis and calcium carbonate equivalent.

d. Fertilizer: Chemical analysis and composition percent.

e. Organic Material: Composition and source.

f. Soil Conditioner: Composition and source.

g. Organic Mulch: Composition, source, and treatment against fungi growth.

h. Mycorrhizal Fungi Inoculum: Plant material treated.

i. Pesticide. EPA registration number and registered uses.

SD-10 Operation and Maintenance Data

Maintenance Instructions

Instruction for year-round care of installed plant material.

1.3 SOURCE INSPECTIONS

The nursery or source of plant material and the source of delivered topsoil shall be subject to inspection.

1.4 DELIVERY, INSPECTION, STORAGE, AND HANDLING

1.4.1 Delivery

A delivery schedule shall be provided at least 10 calendar days prior to the first day of delivery.

1.4.1.1 Plant Material Identification

Plant material shall be identified with attached, durable, waterproof labels and weather-resistant ink, stating the correct botanical plant name and size.

1.4.1.2 Protection During Delivery

Plant material shall be protected during delivery to prevent desiccation and damage to the branches, trunk, root system, or earth ball. Branches shall be protected by tying-in. Exposed branches shall be covered during transport.

1.4.1.3 Delivered Topsoil

Prior to the delivery of any topsoil, the availability of topsoil shall be verified in paragraph TOPSOIL. A soil test shall be provided for delivered topsoil.

1.4.1.4 Soil Amendments

Soil amendments shall be delivered to the site in the original, unopened containers bearing the manufacturer's chemical analysis. In lieu of containers, soil amendments may be furnished in bulk. A chemical analysis shall be provided for bulk deliveries.

1.4.1.5 Pesticide Material

Pesticide material shall be delivered to the site in the original, unopened containers bearing legible labels indicating the Environmental Protection Agency (EPA) registration number and the manufacturer's registered uses.

1.4.2 Inspection

Plant material shall be well shaped, vigorous and healthy with a healthy, well branched root system, free from disease, harmful insects and insect eggs, sun-scald injury, disfigurement or abrasion. Plant material shall be checked for unauthorized substitution and to establish nursery grown status. Plant material showing desiccation, abrasion, sun-scald injury, disfigurement, or unauthorized substitution shall be rejected. The plant material shall exhibit typical form of branch to height ratio; and meet the caliper and height measurements specified. Plant material that measures less than specified, or has been poled, topped off or headed back, shall be rejected. Container-grown plant material shall show new fibrous roots and the root mass shall contain its shape when removed from the container. Plant material with broken or cracked balls; or broken containers shall be

rejected. Bare-root plant material that is not dormant or is showing roots were pulled from the ground shall be rejected. Other materials shall be inspected for compliance with paragraph PRODUCTS. Open soil amendment containers or wet soil amendments shall be rejected. Topsoil that contains slag, cinders, stones, lumps of soil, sticks, roots, trash or other material larger than 1-1/2 inch diameter shall be rejected. Topsoil that contains viable plant material and plant parts shall be rejected. Unacceptable material shall be removed from the job site.

1.4.3 Storage

1.4.3.1 Plant Material Storage

Plant material not installed on the day of arrival at the site shall be stored and protected in designated areas. Plant material shall not be stored longer than 30 days. Plant material shall be protected from direct exposure to wind and sun. Bare-root plant material shall be heeled-in. All plant material shall be kept in a moist condition by watering with a fine mist spray until installed.

1.4.3.2 Other Material Storage

Storage of other material shall be in designated areas. Soil amendments shall be stored in dry locations and away from contaminants. Chemical treatment material shall be stored according to manufacturer's instructions and not with planting operation material.

1.4.4 Handling

Plant material shall not be injured in handling. Cracking or breaking the earth ball of balled and burlapped plant material shall be avoided. Plant material shall not be handled by the trunk or stems. Materials shall not be dropped from vehicles.

1.4.5 Time Limitation

Except for container-grown plant material, the time limitation from digging to installing plant material shall be a maximum 90 days. The time limitation between installing the plant material and placing the mulch shall be a maximum 24 hours.

1.5 WARRANTY

Furnished plant material shall have a warranty for plant growth to be in a vigorous growing condition for a minimum 12 month period. A minimum 12 month calendar time period for the warranty of plant growth shall be provided regardless of the contract time period. When plant material is determined to be unhealthy in accordance with paragraph PLANT ESTABLISHMENT PERIOD, it shall be replaced once under this warranty.

PART 2 PRODUCTS

2.1 PLANT MATERIAL

2.1.1 Plant Material Classification

The plant material shall be nursery grown stock conforming to ANLA Z60.1 and shall be the species specified.

2.1.2 Plant Schedule

The plant schedule shall provide botanical names as included in one or more of the publications listed under "Nomenclature" in ANLA Z60.1.

2.1.3 Substitutions

Substitutions will not be permitted without written request and approval from the Contracting Officer.

2.1.4 Quality

Well shaped, well grown, vigorous plant material having healthy and well branched root systems in accordance with ANLA Z60.1 shall be provided. Plant material shall be provided free from disease, harmful insects and insect eggs, sun-scald injury, disfigurement and abrasion. Plant material shall be free of shock or damage to branches, trunk, or root systems, which may occur from the digging and preparation for shipment, method of shipment, or shipment. Plant quality is determined by the growing conditions; method of shipment to maintain health of the root system; and growth of the trunk and crown as follows.

2.1.5 Growing Conditions

Plant material shall be native to or well-suited to the growing conditions of the project site. Plant material shall be grown under climatic conditions similar to those at the project site.

2.1.6 Method of Shipment to Maintain Health of Root System

2.1.6.1 Balled and Burlapped (BB) Plant Material

Ball size and ratio shall be in accordance with ANLA Z60.1. The ball shall be of a diameter and depth to encompass enough fibrous and feeding root system necessary for the full recovery of the plant. The plant stem or trunk shall be centered in the ball. All roots shall be clean cut at the ball surface. Roots shall not be pulled from the ground. Before shipment the root ball shall be dipped in gels containing mycorrhizal fungi inoculum. The root ball shall be completely wrapped with burlap or other suitable material and securely laced with biodegradable twine.

2.1.6.2 Balled and Potted (Pot) Plant Material

Ball size and ratio shall be in accordance with ANLA Z60.1. The ball shall be of a diameter and depth to encompass enough fibrous and feeding root system necessary for the full recovery of the plant. Removal shall be done by hand digging or mechanical devices. The plant stem or trunk shall be centered in the ball. All roots shall be clean cut at the ball surface. Roots shall not be pulled from the ground. Before shipment the root ball shall be dipped in gels containing mycorrhizal fungi inoculum. Container shall be used to retain the ball unbroken. Container shall be rigid to hold ball shape and protect root mass during shipping.

2.1.6.3 Balled and Platform (BP) Plant Material

Ball size and ratio shall be in accordance with ANLA Z60.1. Plants shall be prepared as balled and burlapped plant material and securely fastened to wood platform for shipping.

2.1.6.4 Bare-Root (BR) Plant Material

Minimum root spread shall be in accordance with ANLA Z60.1. A well branched root system characteristic of the species specified shall be provided. Roots shall not be pulled from the ground. Bare-root plant material shall be inoculated with mycorrhizal fungi during germination in the nursery. Before shipment the root system shall be dipped in gels containing mycorrhizal fungi inoculum. Bare-root plant material shall be dormant. The root system shall be protected from drying out.

2.1.6.5 Container-Grown (C) Plant Material

Container size shall be in accordance with ANLA Z60.1. Plant material shall be grown in a container over a duration of time for new fibrous roots to have developed and for the root mass to retain its shape and hold together when removed from the container. Container-grown plant material shall be inoculated with mycorrhizal fungi during germination in the nursery. Before shipment the root system shall be dipped in gels containing mycorrhizal fungi inoculum. The container shall be sufficiently rigid to hold ball shape and protect root mass during shipping.

2.1.7 Growth of Trunk and Crown

2.1.7.1 Deciduous Trees

A height to caliper relationship shall be provided in accordance with ANLA Z60.1. Height of branching shall bear a relationship to the size and species of tree specified and with the crown in good balance with the trunk. The trees shall not be "poled" or the leader removed.

a. Single stem: The trunk shall be reasonably straight and symmetrical with crown and have a persistent main leader.

b. Multi-stem: All countable stems, in aggregate, shall average the size specified. To be considered a stem, there shall be no division of the trunk which branches more than 6 inches from ground level.

c. Specimen: The tree provided shall be well branched and pruned naturally according to the species. The form of growth desired, which may not be in accordance with natural growth habit, shall be as indicated.

2.1.7.2 Palms

Palms shall have the specified height as measured from the base of the trunk to the base of the fronds or foliage in accordance with ANLA Z60.1. The palm shall have straight trunk and healthy fronds or foliage as typical for the variety grown in the region of the project. Palms trimmed or pruned for delivery shall retain a minimum of 6 inches of foliage at the crown as a means of determining plant health.

2.1.7.3 Deciduous Shrubs

Deciduous shrubs shall have the height and number of primary stems recommended by ANLA Z60.1. Acceptable plant material shall be well shaped, with sufficient well-spaced side branches, and recognized by the trade as typical for the species grown in the region of the project.

2.1.7.4 Coniferous Evergreen Plant Material

Coniferous Evergreen plant material shall have the height-to-spread ratio recommended by ANLA Z60.1. The coniferous evergreen trees shall not be "poled" or the leader removed. Acceptable plant material shall be exceptionally heavy, well shaped and trimmed to form a symmetrical and tightly knit plant. The form of growth desired shall be as indicated.

2.1.7.5 Broadleaf Evergreen Plant Material

Broadleaf evergreen plant material shall have the height-to-spread ratio recommended by ANLA Z60.1. Acceptable plant material shall be well shaped and recognized by the trade as typical for the variety grown in the region of the project.

2.1.7.6 Ground Cover and Vine Plant Material

Ground cover and vine plant material shall have the minimum number of runners and length of runner recommended by ANLA Z60.1. Plant material shall have heavy, well developed and balanced crown with vigorous, well developed root system and shall be furnished in containers.

2.1.8 Plant Material Size

Plant material shall be furnished in sizes indicated. Plant material larger in size than specified may be provided at no additional cost to the Government.

2.1.9 Plant Material Measurement

Plant material measurements shall be in accordance with ANLA Z60.1.

2.2 TOPSOIL

Topsoil shall be as defined in ASTM D 5268. When available, the topsoil shall be the existing surface soil stripped and stockpiled onsite in accordance with Section 02300A EARTHWORK. When additional topsoil is required beyond the available topsoil from the stripping operation, topsoil shall be delivered and amended as recommended by the soil test for the plant material specified. Topsoil shall be free from slag, cinders, stones, lumps of soil, sticks, roots, trash or other material over a minimum 1-1/2 inch diameter. Topsoil shall be free from viable plants and plant parts.

2.3 SOIL AMENDMENTS

Soil amendments shall consist of pH adjuster, fertilizer, organic material and soil conditioners meeting the following requirements. Vermiculite is not recommended.

2.3.1 pH Adjuster

The pH adjuster shall be an agricultural liming material in accordance with ASTM C 602. These materials may be burnt lime, hydrated lime, ground limestone, or shells. The pH adjuster shall be used to create a favorable soil pH for the plant material specified.

2.3.1.1 Limestone

Limestone material shall contain a minimum calcium carbonate equivalent of 80 percent. Gradation: A minimum 95 percent shall pass through a No. 8 sieve and a minimum 55 percent shall pass through a No. 60 sieve. To raise soil pH, ground limestone shall be used.

2.3.1.2 Hydrated Lime

Hydrated lime shall contain a minimum calcium carbonate equivalent of 110 percent. Gradation: A minimum 100 percent shall pass through a No. 8 sieve and a minimum 97 percent shall pass through a No. 60 sieve.

2.3.1.3 Burnt Lime

Burnt lime shall contain a minimum calcium carbonate equivalent of 140 percent. Gradation: A minimum 95 percent shall pass through a No. 8 sieve and a minimum 35 percent shall pass through a No. 60 sieve.

2.3.2 Fertilizer

The nutrients ratio shall be 3 percent nitrogen, 5 percent phosphorus, and 2 percent potassium. Fertilizer shall be controlled release commercial grade; free flowing, pellet or tablet form; uniform in composition; and consist of a nitrogen-phosphorus-potassium ratio. The fertilizer shall be derived from sulphur coated urea, urea formaldehyde, plastic or polymer coated pills, or isobutylenediurea (IBDU). Fertilizer shall be balanced with the inclusion of trace minerals and micro-nutrients.

2.3.3 Organic Material

Organic material shall consist of either bonemeal, peat, rotted manure, decomposed wood derivatives, recycled compost, or worm castings.

2.3.3.1 Bonemeal

Bonemeal shall be a finely ground, steamed bone product containing from 2 to 4 percent nitrogen and 16 to 40 percent phosphoric acid.

2.3.3.2 Rotted Manure

Rotted manure shall be unleached horse, chicken, or cattle manure containing a maximum 25 percent by volume of straw, sawdust, or other bedding materials. Manure shall contain no chemicals or ingredients harmful to plants. The manure shall be heat treated to kill weed seeds and shall be free of stones, sticks, and soil.

2.3.3.3 Decomposed Wood Derivatives

Decomposed wood derivatives shall be ground bark, sawdust, or other wood waste material free of stones, sticks, and toxic substances harmful to plants, and stabilized with nitrogen.

2.3.3.4 Recycled Compost

Compost shall be a well decomposed, stable, weed free organic matter source. It shall be derived from food, agricultural, or industrial residuals; biosolids (treated sewage sludge); yard trimmings; or source-separated or mixed solid waste. The compost shall possess no

objectionable odors and shall not resemble the raw material from which it was derived. The material shall not contain substances toxic to plants. Gradation: The compost material shall pass through a 3/8 inch screen, possess a pH of 5.5 to 8.0, and have a moisture content between 35-55 percent by weight. The material shall not contain more than 1 percent or less by weight of man-made foreign matter. Compost shall be cleaned of plastic materials larger than 2 inches in length. The Contractor shall comply with EPA requirements in accordance with Section 01670 RECYCLED / RECOVERED MATERIALS.

2.3.3.5 Worm Castings

Worm castings shall be screened from worms and food source and shall be commercially packaged.

2.3.4 Soil Conditioner

Soil conditioner shall be sand, super absorbent polymers, calcined clay, or gypsum for single use or in combination to meet topsoil requirements for the plant material specified.

2.3.4.1 Sand

Sand shall be clean and free of toxic materials. Gradation: A minimum 95 percent by weight shall pass a No. 10 sieve and a minimum 10 percent by weight shall pass a No. 16 sieve. Greensand shall be balanced with the inclusion of trace minerals and nutrients.

2.3.4.2 Super Absorbent Polymers

To improve water retention in soils, super absorbent polymers shall be sized according to manufacturer's recommendations. Polymers shall be added as a soil amendment and be cross-linked polyacrylamide with an absorption capacity of 250-400 times its weight.

2.3.4.3 Calcined Clay

Granular particles shall be produced from montmorillonite clay calcined to minimum temperature of 1200 degrees F. Gradation: A minimum 90 percent passing No. 8 sieve; a minimum 99 percent shall be retained on No. 60 sieve; and a maximum 2 percent shall pass a No. 100 sieve. Bulk density: A maximum 40 pounds per cubic foot.

2.3.4.4 Gypsum

Gypsum shall be commercially packaged, free flowing, and a minimum 95 percent calcium sulfate by volume.

2.3.4.5 Expanded Shale, Clay, or Slate (ESCS)

Rotary kiln produced ESCS material shall be in conformance with ASTM D 5883.

2.4 MULCH

Mulch shall be free from weeds, mold, and other deleterious materials. Mulch materials shall be native to the region. Rotted manure is not recommended to be used as a mulch because it would encourage surface rooting of the plant material and weeds.

2.4.1 Inorganic Mulch

When inorganic mulch is required for decorative purposes, it shall be provided in areas designated, and consist of:

a. volcanic rock ranging in size from 1/2 to 3 inches

2.4.2 Organic Mulch

Organic mulch materials shall be native to the project site and consist of recycled mulch, shredded bark, wood chips, or ground bark.

2.4.2.1 Recycled Mulch

Recycled mulch may include compost, tree trimmings, or pine needles with a gradation that passes through a 2-1/2 x 2-1/2 inch screen. It shall be cleaned of all sticks a minimum 1 inch in diameter and plastic materials a minimum 3 inch length. The material shall be treated to retard the growth of mold and fungi. Other recycled mulch may include peanut shells, pecan shells or coco bean shells.

2.4.2.2 Shredded Bark

Locally shredded material shall be treated to retard the growth of mold and fungi.

2.4.2.3 Wood Chips and Ground Bark

Locally chipped or ground material shall be treated to retard the growth of mold and fungi. Gradation: A maximum 2 inch wide by 4 inch long.

2.5 GEOTEXTILE

Geotextile shall be woven; polypropylene, polyester, or fiberglass, mat in accordance with ASTM D 5034 or ASTM D 5035. It shall be made specifically for use as a fabric around plant material. Nominal weight shall be a minimum 4 ounces per square yard. Permeability rate shall be a minimum 0.04 inch per second.

2.6 OMITTED
2.7 OMITTED
2.8 OMITTED
2.9 OMITTED
2.10 OMITTED

2.11 TREE ROOT BARRIERS

Tree root barriers shall be metal or plastic consisting of recycled content. Barriers shall utilize vertical stabilizing members to encourage downward tree root growth. Barriers shall limit, by a minimum 90 percent, the occurrence of surface roots. Tree root barriers which are designed to be used as plant pit liners will be rejected.

2.12 MYCORRHIZAL FUNGI INOCULUM

Mycorrhizal fungi inoculum shall be composed of multiple-fungus inoculum as recommended by the manufacturer for the plant material specified.

2.13 WATER

Unless otherwise directed, water shall be the responsibility of the Contractor. Water shall not contain elements toxic to plant life.

2.14 PESTICIDE

Pesticide shall be insecticide, herbicide, fungicide, nematocide, rodenticide or miticide. For the purpose of this specification a soil fumigant shall have the same requirements as a pesticide. The pesticide material shall be EPA registered and approved.

*5

2.15 IRRIGATION DRIP BAG

Irrigation drip bag shall be a standard commercial product designed for installation around trunks of shade trees. Each bag shall be a long bladder of 10 mil thick UV-resistant polyethylene with heat-sealed seams. Each bag shall have a 85 mm diameter fill aperture on the top, and small drain holes for drip irrigation on the entire length of the bottom. Bag shall be designed in such a way that multiple bags may be joined end-to-end as necessary to fit the size of the tree to be irrigated. Fluid capacity of each bag shall be approximately 75 liters.

PART 3 EXECUTION

3.1 INSTALLING PLANT MATERIAL TIME AND CONDITIONS

3.1.1 Deciduous Plant Material Time

Deciduous plant material shall be installed from Jan to Mar.

3.1.2 Evergreen Plant Material Time

Evergreen plant material shall be installed from Jan to Dec.

3.1.3 Plant Material Conditions

Planting operations shall be performed only during periods when beneficial results can be obtained. When drought, excessive moisture, frozen ground or other unsatisfactory conditions prevail, the work shall be stopped when directed. When special conditions warrant a variance to the planting operations, proposed planting times shall be submitted for approval.

3.1.4 Tests

3.1.4.1 Percolation Test

Test for percolation shall be done to determine positive drainage of plant pits and beds. A positive percolation shall consist of a minimum 1 inch per 3 hours; when a negative percolation test occurs, a shop drawing shall be submitted indicating the corrective measures.

3.1.4.2 Soil Test

Delivered topsoil, excavated plant pit soil, and stockpiled topsoil shall be tested in accordance with ASTM D 5268 and ASTM D 4972 for determining the particle size, pH, organic matter content, textural class, chemical analysis, soluble salts analysis, and mechanical analysis. Sample collection onsite shall be random over the entire site. Sample collection

for stockpiled topsoil shall be at different levels in the stockpile. The soil shall be free from debris, noxious weeds, toxic substances, or other materials harmful to plant growth. The test shall determine the quantities and type of soil amendments required to meet local growing conditions for the plant material specified.

3.2 SITE PREPARATION

3.2.1 Finished Grade, Topsoil and Underground Utilities

The Contractor shall verify that finished grades are as indicated on drawings, and that the placing of topsoil, the smooth grading, and the compaction requirements have been completed in accordance with Section 02300A EARTHWORK, prior to the commencement of the planting operation. The location of underground utilities and facilities in the area of the planting operation shall be verified. Damage to underground utilities and facilities shall be repaired at the Contractor's expense.

3.2.2 Layout

Plant material locations and bed outlines shall be staked on the project site before any excavation is made. Plant material locations may be adjusted to meet field conditions.

3.2.3 Protecting Existing Vegetation

When there are established lawns in the planting area, the turf shall be covered and/or protected during planting operations. Existing trees, shrubs, and plant beds that are to be preserved shall be barricaded along the dripline to protect them during planting operations.

3.3 EXCAVATION

3.3.1 Obstructions Below Ground

When obstructions below ground affect the work, shop drawings showing proposed adjustments to plant material location, type of plant and planting method shall be submitted for approval.

3.3.2 Turf Removal

Where the planting operation occurs in an existing lawn area, the turf shall be removed from the excavation area to a depth that will ensure the removal of the entire root system.

3.3.3 Plant Pits

Plant pits for ball and burlapped or container plant material shall be dug to a depth equal to the height of the root ball as measured from the base of the ball to the base of the plant trunk. Plant pits for bare-root plant material shall be dug to a depth equal to the height of the root system. Plant pits shall be dug a minimum 50 percent wider than the ball or root system to allow for root expansion. The pit shall be constructed with sides sloping towards the base as a cone, to encourage well aerated soil to be available to the root system for favorable root growth. Cylindrical pits with vertical sides shall not be used.

3.4 INSTALLATION

3.4.1 Setting Plant Material

Plant material shall be set plumb and held in position until sufficient soil has been firmly placed around root system or ball. In relation to the surrounding grade, the plant material shall be set even with the grade at which it was grown.

3.4.1.1 Bare-Root Plant Material

Bare-root plant material shall be placed in water a minimum 30 minutes prior to setting.

3.4.2 Tree Root Barrier

Tree root barriers shall be installed as recommended by the manufacturer. Tree root barriers shall be used for trees located up to a maximum 6 feet from paved surfaces or structures.

3.4.3 Backfill Soil Mixture

The backfill soil mixture may be a mix of topsoil and soil amendments suitable for the plant material specified. When practical, the excavated soil from the plant pit that is not amended provides the best backfill and shall be used.

3.4.4 Adding Mycorrhizal Fungi Inoculum

Mycorrhizal fungi inoculum shall be added as recommended by the manufacturer for the plant material specified.

3.4.5 Backfill Procedure

Prior to backfilling, all metal, wood, synthetic products, or treated burlap devices shall be removed from the ball or root system avoiding damage to the root system. The backfill procedure shall remove air pockets from around the root system. Additional requirements are as follows.

3.4.5.1 Balled and Burlapped, and Balled and Platformed Plant Material

Biodegradable burlap and tying material shall be carefully opened and folded back from the top a minimum 1/3 depth from the top of the root ball. Backfill mixture shall be added to the plant pit in 6 inch layers with each layer tamped.

3.4.5.2 Bare-Root Plant Material

The root system shall be spread out and arranged in its natural position. Damaged roots shall be removed with a clean cut. The backfill soil mixture shall be carefully worked in amongst the roots and watered to form a soupy mixture. Air pockets shall be removed from around the root system, and root to soil contact shall be provided.

3.4.5.3 Container-Grown and Balled and Potted Plant Material

The plant material shall be carefully removed from containers that are not biodegradeable. Prior to setting the plant in the pit, a maximum 1/4 depth of the root mass, measured from the bottom, shall be spread apart to

promote new root growth. For plant material in biodegradable containers the container shall be split prior to setting the plant with container. Backfill mixture shall be added to the plant pit in 6 inch layers with each layer tamped.

3.4.5.4 Earth Berm

An earth berm, consisting of backfill soil mixture, shall be formed with a minimum 4 inch height around the edge of the plant pit to aid in water retention and to provide soil for settling adjustments.

3.4.6 Plant Bed

Plant material shall be set in plant beds according to the drawings. Backfill soil mixture shall be placed on previously scarified subsoil to completely surround the root balls, and shall be brought to a smooth and even surface, blending to existing areas. Earth berms shall be provided. Polymers shall be spread uniformly over the plant bed and in the planting pit as recommended by the manufacturer and thoroughly incorporated into the soil to a maximum 4 inch depth.

3.4.7 Watering

Plant pits and plant beds shall be watered immediately after backfilling, until completely saturated.

*5

3.4.8 Tree Watering

Set drip bags in plant pits around newly planted trees to surround each trunk. Distance from tree and depth of cover shall be as recommended by the drip bag manufacturer. Fill bags with water immediately, and refill weekly during the plant establishment period.

3.5 FINISHING

3.5.1 Plant Material

Prior to placing mulch, the installed area shall be uniformly edged to provide a clear division line between the planted area and the adjacent turf area, shaped as indicated. The installed area shall be raked and smoothed while maintaining the earth berms.

3.5.2 Placing Geotextile

Prior to placing mulch, geotextile shall be placed as indicated in accordance with the manufacturer's recommendations.

3.5.3 Placing Mulch

The placement of mulch shall occur a maximum 48 hours after planting. Mulch, used to reduce soil water loss, regulate soil temperature and prevent weed growth, shall be spread to cover the installed area with a minimum 4 inch uniform thickness. Mulch shall be kept out of the crowns of shrubs, ground cover, and vines and shall be kept off buildings, sidewalks and other facilities.

3.5.4 Pruning

Pruning shall be accomplished by trained and experienced personnel. The pruning of trees and palms shall be in accordance with ANSI A300. Only dead or broken material shall be pruned from installed plants. The typical growth habit of individual plant material shall be retained. Clean cuts shall be made flush with the parent trunk. Improper cuts, stubs, dead and broken branches shall be removed. "Headback" cuts at right angles to the line of growth will not be permitted. Trees shall not be poled or the leader removed, nor shall the leader be pruned or "topped off".

3.6 MAINTENANCE DURING PLANTING OPERATION

Installed plant material shall be maintained in a healthy growing condition. Maintenance operations shall begin immediately after each plant is installed to prevent desiccation and shall continue until the plant establishment period commences. Installed areas shall be kept free of weeds, grass, and other undesired vegetation. The maintenance includes maintaining the mulch, watering, and adjusting settling.

3.7 APPLICATION OF PESTICIDE

When application of a pesticide becomes necessary to remove a pest or disease, a pesticide treatment plan shall be submitted and coordinated with the installation pest management program.

3.7.1 Technical Representative

The certified installation pest management coordinator shall be the technical representative, and shall be present at all meetings concerning treatment measures for pest or disease control. They may be present during treatment application.

3.7.2 Application

A state certified applicator shall apply required pesticides in accordance with EPA label restrictions and recommendations. Clothing and personal protective equipment shall be used as specified on the pesticide label. A closed system is recommended as it prevents the pesticide from coming into contact with the applicator or other persons. Water for formulating shall only come from designated locations. Filling hoses shall be fitted with a backflow preventer meeting local plumbing codes or standards. Overflow shall be prevented during the filling operation. Prior to each day of use, the equipment used for applying pesticide shall be inspected for leaks, clogging, wear, or damage. Any repairs are to be performed immediately.

3.8 RESTORATION AND CLEAN UP

3.8.1 Restoration

Turf areas, pavements and facilities that have been damaged from the planting operation shall be restored to original condition at the Contractor's expense.

3.8.2 Clean Up

Excess and waste material shall be removed from the installed area and shall be disposed offsite. Adjacent paved areas shall be cleared.

3.9 PLANT ESTABLISHMENT PERIOD

3.9.1 Commencement

The plant establishment period for maintaining exterior plantings in a healthy growing condition shall commence on the first day of exterior planting work under this contract and shall continue through the remaining life of the contract and end 6 months after the last day of exterior planting required by this contract. Written calendar time period shall be furnished for the plant establishment period. When there is more than one plant establishment period, the boundaries of the planted area covered for each period shall be described. The plant establishment period shall be coordinated with Sections 02921A SEEDING and 02922A SODDING. The plant establishment period shall be modified for inclement weather shut down periods, or for separate completion dates for areas.

3.9.2 Maintenance During Establishment Period

Maintenance of plant material shall include straightening plant material, straightening stakes; tightening guying material; correcting girdling; supplementing mulch; pruning dead or broken branch tips; maintaining plant material labels; watering; eradicating weeds, insects and disease; post-fertilization; and removing and replacing unhealthy plants.

3.9.2.1 Watering Plant Material

The plant material shall be watered as necessary to prevent desiccation and to maintain an adequate supply of moisture within the root zone. An adequate supply of moisture is estimated to be the equivalent of 1 inch absorbed water per week, delivered in the form of rain or augmented by watering. Run-off, puddling and wilting shall be prevented. Unless otherwise directed, watering trucks shall not be driven over turf areas. Watering of other adjacent areas or existing plant material shall be prevented.

3.9.2.2 Weeding

Grass and weeds in the installed areas shall not be allowed to reach a maximum 3 inches height before being completely removed, including the root system.

3.9.2.3 Pesticide Treatment

Treatment for disease or pest shall be in accordance with paragraph APPLICATION OF PESTICIDE.

3.9.2.4 Post-Fertilization

The plant material shall be topdressed at least once during the period of establishment with controlled release fertilizer, reference paragraph SOIL AMENDMENTS. Apply at the rate of 2 pounds per 100 square feet of plant pit or bed area. Dry fertilizer adhering to plants shall be flushed off. The application shall be timed prior to the advent of winter dormancy.

3.9.2.5 Plant Pit Settling

When settling occurs to the backfill soil mixture, additional backfill soil shall be added to the plant pit or plant bed until the backfill level is equal to the surrounding grade. Serious settling that affects the setting

of the plant in relation to the maximum depth at which it was grown requires replanting in accordance with paragraph INSTALLATION. The earth berm shall be maintained.

3.9.2.6 Maintenance Record

A record shall be furnished describing the maintenance work performed, the quantity of plant losses, diagnosis of the plant loss, and the quantity of replacements made on each site visit.

3.9.3 Unhealthy Plant Material

A tree shall be considered unhealthy or dead when the main leader has died back, or up to a maximum 25 percent of the crown has died. A shrub shall be considered unhealthy or dead when up to a maximum 25 percent of the plant has died. This condition shall be determined by scraping on a branch an area 1/16 inch square, maximum, to determine if there is a green cambium layer below the bark. The Contractor shall determine the cause for unhealthy plant material and shall provide recommendations for replacement. Unhealthy or dead plant material shall be removed immediately and shall be replaced as soon as seasonal conditions permit.

3.9.4 Replacement Plant Material

Unless otherwise directed, plant material shall be provided for replacement in accordance with paragraph PLANT MATERIAL. Replacement plant material shall be installed in accordance with paragraph INSTALLATION, and recommendations in paragraph PLANT ESTABLISHMENT PERIOD. Plant material shall be replaced in accordance with paragraph WARRANTY. An extended plant establishment period shall not be required for replacement plant material.

3.9.5 Maintenance Instructions

Written instructions shall be furnished containing drawings and other necessary information for year-round care of the installed plant material; including, when and where maintenance should occur, and the procedures for plant material replacement,.

-- End of Section --

SECTION TABLE OF CONTENTS

DIVISION 02 - SITE CONSTRUCTION

SECTION 02964A

COLD MILLING OF BITUMINOUS PAVEMENTS

03/98

PART 1 GENERAL

1.1 OMITTED
1.2 EQUIPMENT, TOOLS, AND MACHINES
1.2.1 Cold-Milling Machine
1.2.2 Cleaning Equipment
1.2.3 Straightedge
1.3 WEATHER LIMITATIONS
1.4 GRADE AND SURFACE-SMOOTHNESS REQUIREMENTS
1.4.1 Grade
1.4.2 Surface Smoothness

PART 2 PRODUCTS (Not Applicable)

PART 3 EXECUTION

3.1 PREPARATION OF SURFACE
3.2 MILLING OPERATION
3.3 GRADE AND SURFACE-SMOOTHNESS TESTING
3.3.1 Grade-Conformance Tests
3.3.2 Surface-Smoothness Tests
3.4 REMOVAL OF MILLED MATERIAL

-- End of Section Table of Contents --

UFGS-02964A (March 1998)

SECTION 02964A

COLD MILLING OF BITUMINOUS PAVEMENTS
03/98

PART 1 GENERAL

1.1 OMITTED

1.2 EQUIPMENT, TOOLS, AND MACHINES

Equipment, tools, and machines used in the performance of the work shall be maintained in a satisfactory working condition.

1.2.1 Cold-Milling Machine

The cold-milling machine shall be a self-propelled machine capable of milling the pavement to a specified depth and smoothness. Pavement milling machine shall be capable of establishing grade control; shall have means of controlling transverse slope; and shall have effective means of controlling dust produced during the pavement milling operation. The machine shall have the ability to windrow the millings or cuttings or remove the millings or cuttings from the pavement and load them into a truck. The milling machine shall not cause damage to any part of the pavement structure that is not to be removed.

1.2.2 Cleaning Equipment

Cleaning equipment shall be suitable for removing and cleaning loose material from the pavement surface.

1.2.3 Straightedge

The Contractor shall furnish and maintain at the site, in good condition, one 12 foot straightedge or other suitable device for each milling machine, for testing the finished surface. Straightedge shall be made available for Government use. Straightedges shall be constructed of aluminum or other lightweight metal, and shall have blades of box or box-girder cross section with flat bottom reinforced to insure rigidity and accuracy. Straightedges shall have handles to facilitate movement on the pavement.

1.3 WEATHER LIMITATIONS

Milling shall not be performed when there is accumulation of snow or ice on the pavement surface.

1.4 GRADE AND SURFACE-SMOOTHNESS REQUIREMENTS

1.4.1 Grade

The finished milled surfaces shall conform to the lines, grades, and cross sections indicated. The finished milled-pavement surfaces shall vary not more than 0.06 foot from the established plan grade line and elevation.

Finished surfaces at a juncture with other pavements shall coincide with the finished surfaces of the abutting pavements. The deviations from the plan grade line and elevation will not be permitted in areas of pavements where closer conformance with planned grade and elevation is required for the proper functioning of appurtenant structures involved.

1.4.2 Surface Smoothness

Finished surfaces shall not deviate from the testing edge of a straightedge more than 1/4 inch in the transverse or longitudinal direction.

PART 2 PRODUCTS (Not Applicable)

PART 3 EXECUTION

3.1 PREPARATION OF SURFACE

The pavement surface shall be cleaned of excessive dirt, clay, or other foreign material immediately prior to milling the pavement.

3.2 MILLING OPERATION

Sufficient passes shall be made so that the designated area is milled to the grades and cross sections indicated. The milling shall proceed with care and in depth increments that will not damage the pavement below the designated finished grade. Items damaged during milling, such as manholes, valve boxes, utility lines, pavement that is torn, cracked, gouged, broken, or undercut, shall be repaired or replaced as directed. Cold milling operation shall be conducted to ensure that only bituminous pavement is removed and base course is not disturbed. A layer of bituminous pavement, 1/4 to 1/2 inch thick, shall be left in place over the undisturbed base course.

3.3 GRADE AND SURFACE-SMOOTHNESS TESTING

3.3.1 Grade-Conformance Tests

The finished milled surface of the pavement shall be tested for conformance with the plan-grade requirements and will be tested for acceptance by the Contracting Officer by running lines of levels at intervals of 25 feet longitudinally and 25 feettransversely to determine the elevation of the completed pavement. The Contractor shall correct variations from the designated grade line and elevation in excess of the plan-grade requirements as directed. Skin patching for correcting low areas will not be permitted. The Contractor shall remove and replace the deficient low area. Sufficient material shall be removed to allow at least 1 inch of asphalt concrete to be placed.

3.3.2 Surface-Smoothness Tests

After completion of the final milling, the finished milled surface will be tested by the Government with a straightedge. Other approved devices may be used, provided that when satisfactorily and properly operated, such devices reveal all surface irregularities exceeding the tolerances specified. Surface irregularities that depart from the testing edge by more than 1/4 inch shall be corrected.

3.4 REMOVAL OF MILLED MATERIAL

Material that is removed shall be recycled or removed from the station.

-- End of Section --

SECTION TABLE OF CONTENTS

DIVISION 02 - SITE CONSTRUCTION

SECTION 02975A

SEALING OF CRACKS IN BITUMINOUS PAVEMENTS

07/97

PART 1 GENERAL

1.1 REFERENCES
1.2 GENERAL
1.3 SYSTEM DESCRIPTION
1.4 SUBMITTALS
1.5 OMITTED
1.6 EQUIPMENT
1.6.1 Crack Cleaning Equipment
1.6.1.1 Routing Equipment
1.6.1.2 Concrete Saw
1.6.1.3 Sandblasting Equipment
1.6.1.4 Waterblasting Equipment
1.6.1.5 Hand Tools
1.6.2 Crack Sealing Equipment
1.7 DELIVERY AND STORAGE
1.8 ENVIRONMENTAL CONDITIONS

PART 2 PRODUCTS

2.1 SEALANTS
2.2 BACKUP MATERIALS

PART 3 EXECUTION

3.1 PREPARATION OF CRACKS
3.1.1 Cracks
3.1.1.1 Hairline Cracks
3.1.1.2 Small Cracks
3.1.1.3 Medium Cracks
3.1.1.4 Large Cracks
3.1.2 Omitted
3.1.3 Routing
3.1.4 Sawing
3.1.5 Omitted
3.1.6 Backup Material
3.1.7 Rate of Progress of Crack Preparation
3.2 PREPARATION OF SEALANT
3.3 INSTALLATION OF SEALANT
3.3.1 Time of Application
3.3.2 Sealing the Crack
3.4 CRACK SEALANT INSTALLATION TEST SECTION
3.5 CLEANUP
3.6 QUALITY CONTROL PROVISIONS
3.6.1 Crack Cleaning
3.6.2 Crack Seal Application Equipment
3.6.3 Crack Sealant

-- End of Section Table of Contents --

UFGS-02975A (July 1997)

SECTION 02975A

SEALING OF CRACKS IN BITUMINOUS PAVEMENTS
07/97

PART 1 GENERAL

1.1 REFERENCES

The publications listed below form a part of this specification to the extent referenced. The publications are referred to in this text by the basic designation only.

AMERICAN SOCIETY FOR TESTING AND MATERIALS (ASTM)

ASTM C 509	(1994) Elastomeric Cellular Preformed Gasket and Sealing Material
ASTM D 789	(1998) Determination of Relative Viscosity and Moisture Content of Polyamide (PA)
ASTM D 1190	(1997) Concrete Joint Sealer, Hot-Applied Elastic Type
ASTM D 3405	(1997) Joint Sealants, Hot-Applied, for Concrete and Asphalt Pavements

1.2 GENERAL

After the existing pavement has been milled and prior to overlay, the existing cracks in the bituminous pavements shall be cleaned & sealed. After milling, the pavement shall be cleaned using waterblasting equipment to determine the exact extent of sealing required, in accordance with the requirements herein. For bidding purposes, the contractor shall assume that 10,000 linear feet of crack cleaning and sealing is required.

1.3 SYSTEM DESCRIPTION

Machines, tools, and equipment used in the performance of the work required by this section shall be approved before the work is started and shall be maintained in satisfactory condition at all times.

1.4 SUBMITTALS

Government approval is required for submittals with a "G" designation; submittals not having a "G" designation are for information only. When used, a designation following the "G" designation identifies the office that will review the submittal for the Government. The following shall be submitted in accordance with Section 01330 SUBMITTAL PROCEDURES:

SD-03 Product Data

Installation of Sealant; G, PO

Manufacturer's instructions 10 days prior to the use of the material on the project. Installation of the material will not be allowed until the instructions are received.

1.5 OMITTED

1.6 EQUIPMENT

Machines, tools, and equipment used in the performance of the work required by this section shall be approved before the work is started and shall be maintained in satisfactory condition at all times.

1.6.1 Crack Cleaning Equipment

1.6.1.1 Routing Equipment

The routing equipment shall be a self-powered machine operating a power driven tool or bit specifically designed for routing bituminous pavements. The bit shall rotate about a vertical axis at sufficient speed to cut a smooth vertical-walled reservoir in the pavement surface and shall maintain accurate cutting without damaging the sides or top edges of the reservoir. The router shall be capable of following the trace of the crack without deviation. The use of rotary impact routing devices may be permitted if vertical-sided carbide tipped bits are used.

1.6.1.2 Concrete Saw

A self-propelled power saw with small diameter (6 inches or less) water-cooled diamond or abrasive saw blades shall be provided for cutting cracks to the depths and widths specified and for removing filler that is embedded in the cracks or adhered to the crack faces. The diameter of the saw blade shall be small enough to allow the saw to closely follow the trace of the crack.

1.6.1.3 Sandblasting Equipment

Sandblasting equipment shall not be used.

1.6.1.4 Waterblasting Equipment

Waterblasting equipment shall include a trailer-mounted water tank, pumps, high-pressure hose, wand with safety release cutoff control, nozzle, and auxiliary water resupply equipment. The water tank and auxiliary resupply equipment shall be of sufficient capacity to permit continuous operations. The hose, wand, and nozzle shall be capable of cleaning the crack faces and the pavement surface on both sides of the crack for a width of at least 1/2 inch. A pressure gauge mounted at the pump shall show at all times the pressure in pounds per square inch at which the equipment is operating.

1.6.1.5 Hand Tools

Hand tools may be used, when approved, for removing defective sealant from cracks and repairing or cleaning the crack faces.

1.6.2 Crack Sealing Equipment

The unit applicators used for heating and installing the hot-poured crack sealant materials shall be mobile and shall be equipped with a double-boiler, agitator-type kettle with an oil medium in the outer space

for heat transfer; a direct-connected pressure-type extruding device with a nozzle shaped for inserting in the crack to be filled; positive temperature devices for controlling the temperature of the transfer oil and sealant; and a recording type thermometer for indicating the temperature of the sealant. The applicator unit design shall allow the sealant to circulate through the delivery hose and return to the inner kettle when not in use.

1.7 DELIVERY AND STORAGE

Materials delivered to the job site shall be inspected for defects, unloaded, and stored with a minimum of handling to avoid damage. Storage facilities shall be provided at the job site to protect materials from weather and to maintain them at the temperatures recommended by the manufacturer.

1.8 ENVIRONMENTAL CONDITIONS

The ambient air temperature and the pavement temperature within the joint wall shall be a minimum of 50 degrees F and rising at the time of application of the materials. Sealant shall not be applied if moisture is observed in the crack.

PART 2 PRODUCTS

2.1 SEALANTS

Sealants shall conform to ASTM D 3405 or ASTM D 1190. To the greatest extent possible, preference shall be given to the material with the lowest emission of Volatile Organic Compounds (VOC).

2.2 BACKUP MATERIALS

Backup material shall be a compressible, nonshrinking, nonstaining, nonabsorptive material and shall be nonreactive with the crack sealant. The melting point of the backing material shall be at least 5 degrees F greater than the maximum pouring temperature of the sealant being used, when tested in accordance with ASTM D 789. The material shall have a water absorption of not more than 5 percent by weight when tested in accordance with ASTM C 509. The backup material shall be 25 percent (plus or minus 5 percent) larger in diameter than the nominal width of the crack.

PART 3 EXECUTION

3.1 PREPARATION OF CRACKS

Immediately before the installation of the crack sealant, the cracks shall be thoroughly cleaned to remove oxidized pavement, loose aggregate and foreign debris. The preparation shall be as follows:

3.1.1 Cracks

3.1.1.1 Hairline Cracks

Cracks that are less than 1/4 inch wide do not need to be sealed.

3.1.1.2 Small Cracks

Cracks that are 1/4 to 3/4 inch wide shall be routed to a nominal width 1/8 inch greater than the existing nominal width and to a depth not less

than 3/4 inch, waterblasted and cleaned using compressed air.

3.1.1.3 Medium Cracks

Cracks that are 3/4 to 2 inches wide shall be waterblasted and cleaned using compressed air.

3.1.1.4 Large Cracks

Cracks that are greater than 2 inches wide shall be repaired using pothole repair techniques instead of sealing.

3.1.2 Omitted

3.1.3 Routing

Routing of the cracks shall be accomplished using a rotary router with a bit that is at least 1/8 inch wider than the nominal width of the crack to remove all residual old sealant (resealing), oxidized pavement and any loose aggregate in the crack wall.

3.1.4 Sawing

Sawing of the cracks shall be accomplished using a power-driving concrete saw as specified in paragraph EQUIPMENT. The blade shall be stiffened as necessary with suitable dummy (or used) blades or washers. Immediately following the sawing operation, the crack opening shall be cleaned using a water jet to remove all saw cuttings and debris.

3.1.5 Omitted

3.1.6 Backup Material

Backup material shall be used on all cracks that have a depth greater than 3/4 inch. The backup material shall be inserted into the lower portion of the crack as shown on the drawings. The Contractor shall ensure that the backup material is placed at the specified depth and is not stretched or twisted during installation.

3.1.7 Rate of Progress of Crack Preparation

The stages of crack preparation which include routing, sandblasting of the crack faces, air pressure cleaning and placing of the backup material shall be limited to only that linear footage that can be sealed during the same day.

3.2 PREPARATION OF SEALANT

Hot-poured sealants shall not be heated in excess of the safe heating temperature recommended by the manufacturer as shown on the sealant containers. Sealant that has been overheated or subjected to application temperatures for over 4 hours or that has remained in the applicator at the end of the day's operation shall be withdrawn and wasted.

3.3 INSTALLATION OF SEALANT

3.3.1 Time of Application

Cracks shall be sealed immediately following final cleaning of the crack

walls and following the placement of the backup material (when required). Cracks that cannot be sealed under the conditions specified, or when rain interrupts sealing operations, shall be recleaned and allowed to dry prior to installing the sealant.

3.3.2 Sealing the Crack

Immediately preceding, but not more than 50 feet ahead of the crack sealing operations, a final cleaning with compressed air shall be performed. The cracks shall be filled from the bottom up to 1/8 inch below the pavement surface. Excess or spilled sealant shall be removed from the pavement by approved methods and shall be discarded. The sealant shall be installed in a manner which prevents the formation of voids and entrapped air. Several passes with the applicator wand may be necessary to obtain the specified sealant depth from the pavement surface. Gravity methods or pouring pots shall not be used to install the sealant material. Traffic shall not be permitted over newly sealed pavement until authorized by the Contracting Officer. Cracks shall be checked frequently to ensure that the newly installed sealant is cured to a tack-free condition within 3 hours.

3.4 CRACK SEALANT INSTALLATION TEST SECTION

Prior to the cleaning and sealing of the cracks for the entire project, a test section at least 200 feet long shall be prepared using the specified materials and approved equipment, to demonstrate the proposed sealing of all cracks of the project. Following the completion of the test section and before any other crack is sealed, the test section will be inspected to determine that the materials and installation meet the requirements specified. If materials or installation do not meet requirements, the materials shall be removed and the cracks recleaned and resealed at no cost to the Government. When the test section meets the requirements, it may be incorporated into the permanent work and paid for at the contract unit price per linear foot for sealing items scheduled. All other cracks shall be sealed in the manner approved for sealing the test section.

3.5 CLEANUP

Upon completion of the project, unused materials shall be removed from the site and the pavement shall be left in a clean condition.

3.6 QUALITY CONTROL PROVISIONS

3.6.1 Crack Cleaning

Quality control provisions shall be provided during the crack cleaning process to correct improper equipment and cleaning techniques that damage the bituminous pavement in any manner. Cleaned cracks shall be approved prior to installation of the crack sealant.

3.6.2 Crack Seal Application Equipment

The application equipment shall be inspected to ensure conformance to temperature requirements and proper installation. Evidences of bubbling, improper installing, and failing to cure or set shall be cause to suspend operations until causes of the deficiencies are determined and corrected.

3.6.3 Crack Sealant

The crack sealant shall be inspected for proper cure and set rating,

bonding to the bituminous pavement, cohesive separation within the sealant, reversion to liquid, and entrapped air and voids. Sealants exhibiting any of these deficiencies at any time prior to the final acceptance of the project shall be removed from the crack, wasted, and replaced as specified herein at no additional cost to the Government.

-- End of Section --

SECTION TABLE OF CONTENTS

DIVISION 03 - CONCRETE

SECTION 03100A

STRUCTURAL CONCRETE FORMWORK

05/98

PART 1 GENERAL

1.1 REFERENCES
1.2 SUBMITTALS
1.3 DESIGN

PART 2 PRODUCTS

2.1 FORM MATERIALS
2.1.1 Omitted
2.1.2 Forms For Class C Finish
2.1.3 Omitted
2.1.4 Omitted
2.1.5 Omitted
2.1.6 Form Ties
2.1.7 Form Releasing Agents

PART 3 EXECUTION

3.1 INSTALLATION
3.1.1 Formwork
3.1.2 Omitted
3.1.3 Omitted
3.2 CHAMFERING
3.3 COATING
3.4 REMOVAL OF FORMS

-- End of Section Table of Contents --

UFGS-03100A (May 1998)

SECTION 03100A

STRUCTURAL CONCRETE FORMWORK
05/98

PART 1 GENERAL

1.1 REFERENCES

The publications listed below form a part of this specification to the extent referenced. The publications are referred to in the text by basic designation only.

AMERICAN HARDBOARD ASSOCIATION (AHA)

AHA ANSI/AHA A135.4	(1995) Basic Hardboard

DEPARTMENT OF COMMERCE (DOC)

DOC PS 1	(1996) Voluntary Product Standard - Construction and Industrial Plywood

1.2 SUBMITTALS

Government approval is required for submittals with a "G" designation; submittals not having a "G" designation are for information only. When used, a designation following the "G" designation identifies the office that will review the submittal for the Government. The following shall be submitted in accordance with Section 01330 SUBMITTAL PROCEDURES:

SD-03 Product Data

Form Materials
Manufacturer's data including literature describing form materials, accessories, and form releasing agents.

Form Releasing Agents
Manufacturer's recommendation on method and rate of application of form releasing agents.

1.3 DESIGN

Forms shall be capable of producing a surface which meets the requirements of the class of finish specified in Section 03300 CAST-IN-PLACE STRUCTURAL CONCRETE. Forms shall be capable of withstanding the pressures resulting from placement and vibration of concrete.

PART 2 PRODUCTS

2.1 FORM MATERIALS

2.1.1 Omitted

2.1.2 Forms For Class C Finish

Forms for Class C finished surfaces shall be shiplap lumber; plywood conforming to DOC PS 1, Grade B-B concrete form panels, Class I or II; tempered concrete form hardboard conforming to AHA ANSI/AHA A135.4; other approved concrete form material; or steel, except that steel lining on wood sheathing shall not be used. Forms for round columns may have one vertical seam.

2.1.3 Omitted
2.1.4 Omitted
2.1.5 Omitted

2.1.6 Form Ties

Form ties shall be factory-fabricated metal ties, shall be of the removable or internal disconnecting or snap-off type, and shall be of a design that will not permit form deflection and will not spall concrete upon removal. Solid backing shall be provided for each tie. Except where removable tie rods are used, ties shall not leave holes in the concrete surface less than 1/4 inch nor more than 1 inch deep and not more than 1 inchin diameter. Removable tie rods shall be not more than 1-1/2 inches in diameter.

2.1.7 Form Releasing Agents

Form releasing agents shall be commercial formulations that will not bond with, stain or adversely affect concrete surfaces. Agents shall not impair subsequent treatment of concrete surfaces depending upon bond or adhesion nor impede the wetting of surfaces to be cured with water or curing compounds.

PART 3 EXECUTION

3.1 INSTALLATION

3.1.1 Formwork

Forms shall be mortar tight, properly aligned and adequately supported to produce concrete surfaces meeting the surface requirements specified in Section 03300 CAST-IN-PLACE STRUCTURAL CONCRETE and conforming to construction tolerance given in TABLE 1. Where forms for continuous surfaces are placed in successive units, the forms shall fit over the completed surface to obtain accurate alignment of the surface and to prevent leakage of mortar. Forms shall not be reused if there is any evidence of surface wear and tear or defects which would impair the quality of the surface. Surfaces of forms to be reused shall be cleaned of mortar from previous concreting and of all other foreign material before reuse. Form ties that are to be completely withdrawn shall be coated with a nonstaining bond breaker.

3.1.2 Omitted
3.1.3 Omitted

3.2 CHAMFERING

Except as otherwise shown, external corners that will be exposed shall be chamfered, beveled, or rounded by moldings placed in the forms.

3.3 COATING

Forms for Class C finished surfaces may be wet with water in lieu of coating immediately before placing concrete, except that in cold weather with probable freezing temperatures, coating shall be mandatory. Surplus coating on form surfaces and coating on reinforcing steel and construction joints shall be removed before placing concrete.

3.4 REMOVAL OF FORMS

Forms shall be removed preventing injury to the concrete and ensuring the complete safety of the structure. Formwork not supporting the weight of concrete may be removed when the concrete has attained sufficient strength to resist damage from the removal operation but not before at least 24 hours has elapsed since concrete placement.

TABLE 1

TOLERANCES FOR FORMED SURFACES

1.	Variations from the plumb:	In any 10 feet of length ---------- 1/4 inch
2.	Variation from the level or from the grades indicated on the drawings:	In any 10 feet of length ----------1/4 inch In any bay or in any 20 feet of length---------- 3/8 inch
3.	Variation of the linear building lines from established position in plan	In any 20 feet --------- 1/2 inch Maximum ----------1 inch
4.	Variation of distance between walls, partitions	1/4 inch per 10 feet of distance, but not more than 1/2 inch in any one bay,and not more than 1 inch total variation
5.	Variation in the sizes and locations of sleeves, floor openings, and wall opening	Minus ---------- 1/4 inch Plus ---------- 1/2 inch
6.	Variation in thickness of slabs	Minus ---------- 1/4 inch Plus ---------- 1/2 inch
7.	Footings:	
	a. Variation of dimensions in plan	Minus ---------- 1/2 inch Plus ---------- 2 inches

TABLE 1

TOLERANCES FOR FORMED SURFACES

	when formed or plus 3 inches when placed against unformed excavation
b. Misplacement of eccentricity	2 percent of the footing width in the direction of misplacement but not more than 2 inches
c. Reduction in thickness of specified thickness	Minus ---------- 5 percent
8. Variation in steps:	Riser ---------- 1/8 inch
a. In a flight of stairs	Tread ---------- 1/4 inch
b. In consecutive steps	Riser ---------- 1/16 inch Tread ---------- 1/8 inch

-- End of Section --

SECTION TABLE OF CONTENTS

DIVISION 03 - CONCRETE

SECTION 03150A

EXPANSION JOINTS, AND CONTRACTION JOINTS

05/98

PART 1 GENERAL

1.1 REFERENCES
1.2 SUBMITTALS
1.3 DELIVERY AND STORAGE

PART 2 PRODUCTS

2.1 CONTRACTION JOINT STRIPS
2.2 PREFORMED EXPANSION JOINT FILLER
2.3 SEALANT
2.3.1 Omitted
2.3.2 Omitted
2.3.3 Omitted
2.3.4 Field-Molded Type

PART 3 EXECUTION

3.1 JOINTS
3.1.1 Contraction Joints
3.1.1.1 Joint Strips
3.1.1.2 Sawed Joints
3.1.1.3 Tooled Joints
3.1.2 Expansion Joints
3.1.3 Joint Sealant
3.1.3.1 Omitted
3.1.3.2 Joints With Field-Molded Sealant
3.2 OMITTED
3.3 CONSTRUCTION JOINTS

-- End of Section Table of Contents --

UFGS-03150A (May 1998)

Includes changes through Notice 1 (October 2000)

SECTION 03150A

EXPANSION JOINTS, AND CONTRACTION JOINTS
05/98

PART 1 GENERAL

1.1 REFERENCES

The publications listed below form a part of this specification to the extent referenced. The publications are referred to in the text by basic designation only.

AMERICAN HARDBOARD ASSOCIATION (AHA)

AHA A135.4	(1995) Basic Hardboard

AMERICAN SOCIETY FOR TESTING AND MATERIALS (ASTM)

ASTM C 919	(1984; R 1998) Use of Sealants in Acoustical Applications
ASTM C 920	(1998) Elastomeric Joint Sealants
ASTM D 1751	(1999) Preformed Expansion Joint Filler for Concrete Paving and Structural Construction (Nonextruding and Resilient Bituminous Types)
ASTM D 1752	(1984; R 1996el) Preformed Sponge Rubber and Cork Expansion Joint Fillers for Concrete Paving and Structural Construction
ASTM D 5249	(1995) Backer Material for Use With Cold and Hot-Applied Joint Sealants in Portland-Cement Concrete and Asphalt Joints

1.2 SUBMITTALS

Government approval is required for submittals with a "G" designation; submittals not having a "G" designation are for information only. When used, a designation following the "G" designation identifies the office that will review the submittal for the Government. The following shall be submitted in accordance with Section 01330 SUBMITTAL PROCEDURES:

SD-03 Product Data

Preformed Expansion Joint Filler
Sealant

Manufacturer's literature, including safety data sheets, for preformed fillers and the lubricants used in their installation; field-molded sealants and primers (when required by sealant manufacturer).

Preformed Expansion Joint Filler
Sealant

Manufacturer's recommended instructions for installing preformed fillers, field-molded sealants; and waterstops; and for splicing non-metallic waterstops.

SD-07 Certificates

Preformed Expansion Joint Filler
Sealant

Certificates of compliance stating that the joint filler and sealant materials and waterstops conform to the requirements specified.

1.3 DELIVERY AND STORAGE

Material delivered and placed in storage shall be stored off the ground and protected from moisture, dirt, and other contaminants. Sealants shall be delivered in the manufacturer's original unopened containers. Sealants whose shelf life has expired shall be removed from the site.

PART 2 PRODUCTS

2.1 CONTRACTION JOINT STRIPS

Contraction joint strips shall be 1/8 inch thick tempered hardboard conforming to AHA A135.4, Class 1. In lieu of hardboard strips, rigid polyvinylchloride (PVC) or high impact polystyrene (HIPS) insert strips specifically designed to induce controlled cracking in slabs on grade may be used. Such insert strips shall have removable top section.

2.2 PREFORMED EXPANSION JOINT FILLER

Expansion joint filler shall be preformed material conforming to ASTM D 1751 or ASTM D 1752. Unless otherwise indicated, filler material shall be 3/8 inch thick and of a width applicable for the joint formed. Backer material, when required, shall conform to ASTM D 5249.

2.3 SEALANT

Joint sealant shall conform to the following:

2.3.1 Omitted
2.3.2 Omitted
2.3.3 Omitted

2.3.4 Field-Molded Type

ASTM C 920, Type M for horizontal joints or Type NS for vertical joints,

Class 25, and Use NT. Bond breaker material shall be polyethylene tape, coated paper, metal foil or similar type materials. The back-up material shall be compressible, non-shrink, nonreactive with sealant, and non-absorptive material type such as extruded butyl or polychloroprene rubber. To the greatest extent possible, preference shall be given to those materials with the lowest emission of Volatile Organic Compounds (VOC).

PART 3 EXECUTION

3.1 JOINTS

Joints shall be installed at locations indicated and as authorized.

3.1.1 Contraction Joints

Contraction joints may be constructed by inserting tempered hardboard strips or rigid PVC or HIPS insert strips into the plastic concrete using a steel parting bar, when necessary, or by cutting the concrete with a saw after concrete has set. Joints shall be approximately 1/8 inch wide and shall extend into the slab one-fourth the slab thickness, minimum, but not less than 1 inch.

3.1.1.1 Joint Strips

Strips shall be of the required dimensions and as long as practicable. After the first floating, the concrete shall be grooved with a tool at the joint locations. The strips shall be inserted in the groove and depressed until the top edge of the vertical surface is flush with the surface of the slab. The slab shall be floated and finished as specified. Working of the concrete adjacent to the joint shall be the minimum necessary to fill voids and consolidate the concrete. Where indicated, the top portion of the strip shall be sawed out after the curing period to form a recess for sealer. The removable section of PVC or HIPS strips shall be discarded and the insert left in place. True alignment of the strips shall be maintained during insertion.

3.1.1.2 Sawed Joints

Joint sawing shall be early enough to prevent uncontrolled cracking in the slab, but late enough that this can be accomplished without appreciable spalling but in no case later than 8 hours after time of placement. Concrete sawing machines shall be adequate in number and power, and with sufficient replacement blades to complete the sawing at the required rate. Joints shall be cut to true alignment and shall be cut in sequence of concrete placement. Sludge and cutting debris shall be removed.

3.1.1.3 Tooled Joints

Tooled joints as part of grid pattern in concrete walkway and entry areas around Recreation Center shall be made by use of a groove-cutting tool that provides a cut and troweled areas on both sides of grid. Groves shall be cut and tooled after broom finish on slab is done and care shall be taken not to mar the brooming pattern.

3.1.2 Expansion Joints

Preformed expansion joint filler shall be used in expansion and isolation joints in slabs around columns and between slabs on grade and vertical

surfaces where indicated. The filler shall extend the full slab depth, unless otherwise indicated. The edges of the joint shall be neatly finished with an edging tool of 1/8 inch radius, except where a resilient floor surface will be applied. Where the joint is to receive a sealant, the filler strips shall be installed at the proper level below the finished floor with a slightly tapered, dressed and oiled wood strip temporarily secured to the top to form a recess to the size shown on the drawings. The wood strip shall be removed after the concrete has set. Contractor may opt to use a removable expansion filler cap designed and fabricated for this purpose in lieu of the wood strip. The groove shall be thoroughly cleaned of laitance, curing compound, foreign materials, protrusions of hardened concrete, and any dust which shall be blown out of the groove with oil-free compressed air.

3.1.3 Joint Sealant

Sawed contraction joints and expansion joints in slabs shall be filled with joint sealant, unless otherwise shown. Joint surfaces shall be clean, dry, and free of oil or other foreign material which would adversely affect the bond between sealant and concrete. Joint sealant shall be applied as recommended by the manufacturer of the sealant.

3.1.3.1 Omitted

3.1.3.2 Joints With Field-Molded Sealant

Joints shall not be sealed when the sealant material, ambient air, or concrete temperature is less than 40 degrees F. When the sealants are meant to reduce the sound transmission characteristics of interior walls, ceilings, and floors the guidance provided in ASTM C 919 shall be followed. Joints requiring a bond breaker shall be coated with curing compound or with bituminous paint. Bond breaker and back-up material shall be installed where required. Joints shall be primed and filled flush with joint sealant in accordance with the manufacturer's recommendations.

3.2 OMITTED

3.3 CONSTRUCTION JOINTS

Construction joints are specified in Section 03300 CAST-IN-PLACE STRUCTURAL CONCRETE except that construction joints coinciding with expansion and contraction joints shall be treated as expansion or contraction joints as applicable.

-- End of Section --

SECTION TABLE OF CONTENTS

DIVISION 03 - CONCRETE

SECTION 03200A

CONCRETE REINFORCEMENT

09/97

PART 1 GENERAL

1.1 REFERENCES
1.2 SUBMITTALS
1.3 OMITTED
1.4 DELIVERY AND STORAGE

PART 2 PRODUCTS

2.1 OMITTED
2.2 OMITTED
2.3 REINFORCING STEEL
2.4 WELDED WIRE FABRIC
2.5 WIRE TIES
2.6 SUPPORTS
2.7 SYNTHETIC FIBER REINFORCEMENT

PART 3 EXECUTION

3.1 REINFORCEMENT
3.1.1 Placement
3.1.2 Splicing
3.2 WELDED-WIRE FABRIC PLACEMENT
3.4 SYNTHETIC FIBER REINFORCED CONCRETE

-- End of Section Table of Contents --

UFGS-03200A (September 1997)

SECTION 03200A

CONCRETE REINFORCEMENT
09/97

PART 1 GENERAL

1.1 REFERENCES

The publications listed below form a part of this specification to the extent referenced. The publications are referred to in the text by basic designation only.

ACI INTERNATIONAL (ACI)

ACI 318/318R	(1995) Building Code Requirements for Structural Concrete and Commentary

AMERICAN SOCIETY FOR TESTING AND MATERIALS (ASTM)

ASTM A 185	(1997) Steel Welded Wire Fabric, Plain, for Concrete Reinforcement
ASTM A 615/A 615M	(1996a) Deformed and Plain Billet-Steel Bars for Concrete Reinforcement
ASTM A 706/A 706M	(1998) Low-Alloy Steel Deformed and Plain Bars for Concrete Reinforcement
ASTM C 1116	(1995) Fiber-Reinforced Concrete and Shotcrete

CONCRETE REINFORCING STEEL INSTITUTE (CRSI)

CRSI MSP-1	(1996) Manual of Standard Practice

1.2 SUBMITTALS

Government approval is required for submittals with a "G" designation;

submittals not having a "G" designation are for information only. When used, a designation following the "G" designation identifies the office that will review the submittal for the Government. The following shall be submitted in accordance with Section 01330 SUBMITTAL PROCEDURES:

SD-02 Shop Drawings

Reinforcement; G,AE

Detail drawings showing reinforcing steel placement, schedules, sizes, grades, and splicing and bending details. Drawings shall show support details including types, sizes and spacing.

SD-07 Certificates

Reinforcing Steel;

Certified copies of mill reports attesting that the reinforcing steel furnished contains no less than 25 percent recycled scrap steel and meets the requirements specified herein, prior to the installation of reinforcing steel.

1.3 OMITTED

1.4 DELIVERY AND STORAGE

Reinforcement and accessories shall be stored off the ground on platforms, skids, or other supports.

PART 2 PRODUCTS

2.1 OMITTED
2.2 OMITTED

2.3 REINFORCING STEEL

Reinforcing steel shall be deformed bars conforming to ASTM A 615/A 615M or ASTM A 706/A 706M, grades and sizes as indicated.

2.4 WELDED WIRE FABRIC

Welded wire fabric shall conform to ASTM A 185.

2.5 WIRE TIES

Wire ties shall be 16 gauge or heavier black annealed steel wire.

2.6 SUPPORTS

Bar supports for formed surfaces shall be designed and fabricated in accordance with CRSI MSP-1 and shall be steel or precast concrete blocks. Precast concrete blocks shall be used for cast on grade construction only. Precast concrete blocks shall have wire ties and shall be not less than 4 inches square when supporting reinforcement on ground. Precast concrete block shall have compressive strength equal to that of the surrounding concrete. Where concrete formed surfaces will be exposed to weather or where surfaces are to be painted, steel supports within 1/2 inch of concrete surface shall be galvanized, plastic protected or of stainless steel. Concrete supports used in concrete exposed to view shall have the

same color and texture as the finish surface. For slabs on grade, supports shall be precast concrete blocks, plastic coated steel fabricated with bearing plates, or specifically designed wire-fabric supports fabricated of plastic.

2.7 SYNTHETIC FIBER REINFORCEMENT

Synthetic fiber shall be polypropylene with a denier less than 100 and a nominal fiber length of 2 inches.

PART 3 EXECUTION

3.1 REINFORCEMENT

Reinforcement shall be fabricated to shapes and dimensions shown and shall conform to the requirements of ACI 318/318R. Reinforcement shall be cold bent unless otherwise authorized. Bending may be accomplished in the field or at the mill. Bars shall not be bent after embedment in concrete. Safety caps shall be placed on all exposed ends of vertical concrete reinforcement bars that pose a danger to life safety. Wire tie ends shall face away from the forms.

3.1.1 Placement

Reinforcement shall be free from loose rust and scale, dirt, oil, or other deleterious coating that could reduce bond with the concrete. Reinforcement shall be placed in accordance with ACI 318/318R at locations shown plus or minus one bar diameter. Reinforcement shall not be continuous through expansion joints and shall be as indicated through construction or contraction joints. Concrete coverage shall be as indicated or as required by ACI 318/318R. If bars are moved more than one bar diameter to avoid interference with other reinforcement, conduits or embedded items, the resulting arrangement of bars, including additional bars required to meet structural requirements, shall be approved before concrete is placed.

3.1.2 Splicing

Splices of reinforcement shall conform to ACI 318/318R and shall be made only as required or indicated. Splicing shall be by lapping. Lapped bars shall be placed in contact and securely tied or spaced transversely apart to permit the embedment of the entire surface of each bar in concrete. Lapped bars shall not be spaced farther apart than one-fifth the required length of lap or 6 inches.

3.2 WELDED-WIRE FABRIC PLACEMENT

Welded-wire fabric shall be placed in slabs as indicated. Fabric placed in slabs on grade shall be continuous between expansion, construction, and contraction joints. Fabric placement at joints shall be as indicated. Lap splices shall be made in such a way that the overlapped area equals the distance between the outermost crosswires plus 2 inches. Laps shall be staggered to avoid continuous laps in either direction. Fabric shall be wired or clipped together at laps at intervals not to exceed 4 feet. Fabric shall be positioned by the use of supports.

3.4 SYNTHETIC FIBER REINFORCED CONCRETE

Fiber reinforcement shall be added to the concrete mix in accordance with

the applicable sections of ASTM C 1116 and the recommendations of the manufacturer, and in an amount of 0.1 percent by volume.

-- End of Section --

SECTION TABLE OF CONTENTS

DIVISION 03 - CONCRETE

SECTION 03300

CAST-IN-PLACE STRUCTURAL CONCRETE

11/01

PART 1 GENERAL

1.1 REFERENCES
1.2 OMITTED
1.3 OMITTED
1.4 SUBMITTALS
1.5 QUALIFICATIONS
1.6 OMITTED
1.7 OMITTED
1.8 GENERAL REQUIREMENTS
1.8.1 Tolerances
1.8.1.1 Floors
1.8.1.2 Floors by the F-Number System
1.8.1.3 Omitted
1.8.2 Strength Requirements and w/c Ratio
1.8.2.1 Strength Requirements
1.8.2.2 Water-Cement Ratio
1.8.3 Air Entrainment
1.8.4 Slump
1.8.5 Concrete Temperature
1.8.6 Size of Coarse Aggregate
1.8.7 Special Properties and Products
1.9 MIXTURE PROPORTIONS
1.9.1 Proportioning Studies for Normal Weight Concrete
1.9.2 Omitted
1.9.3 Omitted
1.9.4 Average Compressive Strength Required for Mixtures
1.9.4.1 Computations from Test Records
1.9.4.2 Computations without Previous Test Records
1.10 STORAGE OF MATERIALS
1.11 GOVERNMENT ASSURANCE INSPECTION AND TESTING
1.11.1 Materials
1.11.2 Fresh Concrete
1.11.3 Hardened Concrete
1.11.4 Inspection

PART 2 PRODUCTS

2.1 CEMENTITIOUS MATERIALS
2.1.1 Portland Cement
2.1.2 Omitted
2.1.3 Omitted
2.1.4 Pozzolan (Fly Ash)
2.1.5 Ground Granulated Blast-Furnace (GGBF) Slag
2.2 AGGREGATES
2.2.1 Fine Aggregate
2.2.2 Coarse Aggregate
2.3 CHEMICAL ADMIXTURES

2.3.1 Air-Entraining Admixture
2.3.2 Accelerating Admixture
2.3.3 Water-Reducing or Retarding Admixture
2.3.4 High-Range Water Reducer
2.3.5 Omitted
2.3.6 Omitted
2.3.7 Other Chemical Admixtures
2.4 CURING MATERIALS
2.4.1 Impervious-Sheet
2.4.2 Membrane-Forming Compound
2.4.3 Burlap and Cotton Mat
2.5 WATER
2.6 NONSHRINK GROUT
2.7 OMITTED
2.8 LATEX BONDING AGENT
2.9 EPOXY RESIN
2.10 EMBEDDED ITEMS
2.11 OMITTED
2.12 PERIMETER INSULATION
2.13 VAPOR BARRIER
2.14 JOINT MATERIALS
2.14.1 Joint Fillers and Sealers
2.14.2 Contraction Joints in Slabs

PART 3 EXECUTION

3.1 PREPARATION FOR PLACING
3.1.1 Foundations
3.1.1.1 Concrete on Earth Foundations
3.1.1.2 Omitted
3.1.1.3 Excavated Surfaces in Lieu of Forms
3.1.2 Previously Placed Concrete
3.1.2.1 Omitted
3.1.2.2 Omitted
3.1.2.3 Omitted
3.1.2.4 Omitted
3.1.2.5 Preparation of Previously Placed Concrete
3.1.3 Vapor Barrier
3.1.4 Perimeter Insulation
3.1.5 Embedded Items
3.2 CONCRETE PRODUCTION
3.2.1 Batching, Mixing, and Transporting Concrete
3.3 OMITTED
3.4 OMITTED
3.5 OMITTED
3.6 TRANSPORTING CONCRETE TO PROJECT SITE
3.7 CONVEYING CONCRETE ON SITE
3.7.1 Buckets
3.7.2 Omitted
3.7.3 Omitted
3.7.4 Chutes
3.7.5 Omitted
3.7.6 Concrete Pumps
3.8 PLACING CONCRETE
3.8.1 Depositing Concrete
3.8.2 Consolidation
3.8.3 Cold Weather Requirements
3.8.4 Hot Weather Requirements
3.8.5 Prevention of Plastic Shrinkage Cracking

3.8.6 Omitted
3.8.7 Omitted
3.8.8 Placing Flowable Concrete
3.9 JOINTS
3.9.1 Construction Joints
3.9.2 Contraction Joints in Slabs on Grade
3.9.3 Expansion Joints
3.9.4 Omitted
3.9.5 Dowels and Tie Bars
3.10 FINISHING FORMED SURFACES
3.10.1 Omitted
3.10.2 Class C Finish
3.10.3 Omitted
3.11 REPAIRS
3.11.1 Damp-Pack Mortar Repair
3.11.2 Repair of Major Defects
3.11.2.1 Surface Application of Mortar Repair
3.11.2.2 Repair of Deep and Large Defects
3.12 FINISHING UNFORMED SURFACES
3.12.1 General
3.12.2 Rough Slab Finish
3.12.3 Floated Finish
3.12.4 Troweled Finish
3.12.5 Omitted
3.12.6 Non-Slip Finish
3.12.6.1 Broomed
3.12.7 Topping on Precast Floor Slabs
3.13 OMITTED
3.14 EXTERIOR SLAB AND RELATED ITEMS
3.14.1 Omitted
3.14.2 Sidewalks Adjacent to Buildings
3.15 CURING AND PROTECTION
3.15.1 General
3.15.2 Moist Curing
3.15.3 Membrane Forming Curing Compounds
3.15.4 Impervious Sheeting
3.15.5 Ponding or Immersion
3.15.6 Cold Weather Curing and Protection
3.16 SETTING BASE PLATES AND BEARING PLATES
3.16.1 Omitted
3.16.2 Nonshrink Grout
3.16.2.1 Mixing and Placing of Nonshrink Grout
3.16.2.2 Treatment of Exposed Surfaces
3.17 TESTING AND INSPECTION FOR CONTRACTOR QUALITY CONTROL
3.17.1 Grading and Corrective Action
3.17.1.1 Fine Aggregate
3.17.1.2 Coarse Aggregate
3.17.2 Quality of Aggregates
3.17.3 Scales, Batching and Recording
3.17.4 Batch-Plant Control
3.17.5 Concrete Mixture
3.17.6 Inspection Before Placing
3.17.7 Placing
3.17.8 Vibrators
3.17.9 Curing Inspection
3.17.10 Cold-Weather Protection
3.17.11 Mixer Uniformity
3.17.12 Reports

-- End of Section Table of Contents --

UFGS-03300 (November 2001)

SECTION 03300

CAST-IN-PLACE STRUCTURAL CONCRETE
11/01

PART 1 GENERAL

1.1 REFERENCES

The publications listed below form a part of this specification to the extent referenced. The publications are referred to in the text by basic designation only.

ACI INTERNATIONAL (ACI)

ACI 117/117R	(1990; Errata) Standard Tolerances for Concrete Construction and Materials
ACI 211.1	(1991) Standard Practice for Selecting Proportions for Normal, Heavyweight, and Mass Concrete
ACI 214.3R	(1988; R 1997) Simplified Version of the Recommended Practice for Evaluation of Strength Test Results of Concrete
ACI 305R	(1999) Hot Weather Concreting
ACI 318/318R	(1999) Building Code Requirements for Structural Concrete and Commentary

AMERICAN ASSOCIATION OF STATE HIGHWAY AND TRANSPORTATION OFFICIALS (AASHTO)

AASHTO M 182	(1991; R 1996) Burlap Cloth Made from Jute or Kenaf

AMERICAN SOCIETY FOR TESTING AND MATERIALS (ASTM)

ASTM C 1017/C 1017M	(1998) Chemical Admixtures for Use in Producing Flowing Concrete
ASTM C 1059	(1999) Latex Agents for Bonding Fresh to Hardened Concrete
ASTM C 1064/C 1064M	(1999) Temperature of Freshly Mixed Portland Cement Concrete
ASTM C 1077	(1998) Laboratories Testing Concrete and Concrete Aggregates for Use in Construction and Criteria for Laboratory Evaluation
ASTM C 1107	(1999) Packaged Dry, Hydraulic-Cement Grout(Nonshrink)

ASTM C 136	(1996a) Sieve Analysis of Fine and Coarse Aggregates
ASTM C 143/C 143M	(2000) Slump of Hydraulic Cement Concrete
ASTM C 150	(1999a) Portland Cement
ASTM C 171	(1997a) Sheet Materials for Curing Concrete
ASTM C 172	(1999) Sampling Freshly Mixed Concrete
ASTM C 192/C 192M	(2000) Making and Curing Concrete Test Specimens in the Laboratory
ASTM C 231	(1997el) Air Content of Freshly Mixed Concrete by the Pressure Method
ASTM C 260	(2000) Air-Entraining Admixtures for Concrete
ASTM C 309	(1998a) Liquid Membrane-Forming Compounds for Curing Concrete
ASTM C 31/C 31M	(2000e1) Making and Curing Concrete Test Specimens in the Field
ASTM C 33	(1999ae1) Concrete Aggregates
ASTM C 39/C 39M	(2001) Compressive Strength of Cylindrical Concrete Specimens
ASTM C 42/C 42M	(1999) Obtaining and Testing Drilled Cores and Sawed Beams of Concrete
ASTM C 494/C 494M	(1999ae1) Chemical Admixtures for Concrete
ASTM C 552	(2000) Cellular Glass Thermal Insulation
ASTM C 578	(1995) Rigid, Cellular Polystyrene Thermal Insulation
ASTM C 591	(1994) Unfaced Preformed Rigid Cellular Polyisocyanurate Thermal Insulation
ASTM C 618	(2000) Coal Fly Ash and Raw or Calcined Natural Pozzolan for Use as a Mineral Admixture in Concrete
ASTM C 78	(1994) Flexural Strength of Concrete (Using Simple Beam With Third-Point Loading)
ASTM C 881	(1999) Epoxy-Resin-Base Bonding Systems for Concrete
ASTM C 94/C 94M	(2000e2) Ready-Mixed Concrete
ASTM C 989	(1999) Ground Granulated Blast-Furnace

	Slag for Use in Concrete and Mortars
ASTM D 1751	(1999) Preformed Expansion Joint Filler for Concrete Paving and Structural Construction (Nonextruding and Resilient Bituminous Types)
ASTM D 75	(1987; R 1997) Sampling Aggregates
ASTM E 1155	(1996) Determining Floor Flatness and Levelness Using the F-Number System
ASTM E 96	(2000) Water Vapor Transmission of Materials

NATIONAL READY-MIXED CONCRETE ASSOCIATION (NRMCA)

NRMCA QC 3	(1984) Quality Control Manual: Section 3, Plant Certifications Checklist: Certification of Ready Mixed Concrete Production Facilities
NRMCA TMMB 100	(1994) Truck Mixer Agitator and Front Discharge Concrete Carrier Standards

U.S. ARMY CORPS OF ENGINEERS (USACE)

COE CRD-C 104	(1980) Method of Calculation of the Fineness Modulus of Aggregate
COE CRD-C 400	(1963) Requirements for Water for Use in Mixing or Curing Concrete
COE CRD-C 521	(1981) Standard Test Method for Frequency and Amplitude of Vibrators for Concrete
COE CRD-C 540	(1971; R 1981) Standard Specification for Nonbituminous Inserts for Contraction Joints in Portland Cement Concrete Airfield Pavements, Sawable Type
COE CRD-C 572	(1974) Corps of Engineers Specifications for Polyvinylchloride Waterstop

1.2 OMITTED
1.3 OMITTED

1.4 SUBMITTALS

Government approval is required for submittals with a "G" designation; submittals not having a "G" designation are for information only. When used, a designation following the "G" designation identifies the office that will review the submittal for the Government. The following shall be submitted in accordance with Section 01330 SUBMITTAL PROCEDURES:

SD-03 Product Data

Mixture Proportions; G, AE

The results of trial mixture design studies along with a statement giving the maximum nominal coarse aggregate size and the proportions of ingredients that will be used in the manufacture of each strength or class of concrete, at least 14 days prior to commencing concrete placing operations. Aggregate weights shall be based on the saturated surface dry condition. The statement shall be accompanied by test results from an approved independent commercial testing laboratory, showing that mixture design studies have been made with materials proposed for the project and that the proportions selected will produce concrete of the qualities indicated. No substitutions shall be made in the materials used in the mixture design studies without additional tests to show that the quality of the concrete is satisfactory.

SD-06 Test Reports

Testing and Inspection for Contractor Quality Control

Certified copies of laboratory test reports, including mill tests and all other test data, for portland cement, blended cement, pozzolan, ground granulated blast furnace slag, aggregate, admixtures, and curing compound proposed for use on this project.

SD-07 Certificates

Qualifications

Written documentation for Contractor Quality Control personnel.

1.5 QUALIFICATIONS

Contractor Quality Control personnel assigned to concrete construction shall be American Concrete Institute (ACI) Certified Workmen in one of the following grades or shall have written evidence of having completed similar qualification programs:

Concrete Field Testing Technician, Grade I
Concrete Laboratory Testing Technician, Grade I or II
Concrete Construction Inspector, Level II

Concrete Transportation Construction Inspector or
Reinforced Concrete Special Inspector, Jointly certified by American Concrete Institute (ACI), Building Official and Code Administrators International (BOCA), International Conference of Building Officials (ICBO), and Southern Building Code Congress International (SBCCI).

The foreman or lead journeyman of the flatwork finishing crew shall have similar qualification for ACI Concrete Flatwork Technician/Finisher or equal, with written documentation.

1.6 OMITTED
1.7 OMITTED

1.8 GENERAL REQUIREMENTS

1.8.1 Tolerances

Except as otherwise specified herein, tolerances for concrete batching, mixture properties, and construction as well as definition of terms and application practices shall be in accordance with ACI 117/117R. Level and grade tolerance measurements of slabs shall be made as soon as possible after finishing; when forms or shoring are used, the measurements shall be made prior to removal.

1.8.1.1 Floors

For the purpose of this Section the following terminology correlation between ACI 117/117R and this Section shall apply:

Floor Profile Quality Classification From ACI 117/117R	This Section
Conventional Bullfloated	Same
Conventional Straightedged	Same
Flat	Float Finish or Trowel Finish
Very Flat	Same. Use only with F-system

Levelness tolerance shall not apply where design requires floors to be sloped to drains or sloped for other reasons.

1.8.1.2 Floors by the F-Number System

The flatness and levelness of floors shall be carefully controlled and the tolerances shall be measured by the F-Number system of Paragraph 4.5.6 and 4.5.6.1 of ACI 117/117R. The Contractor shall furnish an approved floor profilograph or other equipment capable of measuring the floor flatness (FF) number and the floor levelness (FL) number in accordance with ASTM E 1155. The Contractor shall perform the tolerance measurements within 72 hours after floor slab construction while being observed by the Contracting Officer. The tolerances of surfaces beyond the limits of ASTM E 1155 (the areas within 24 inches of embedments and construction joints) shall be acceptable to the Contracting Officer. Tolerances of the following areas shall meet the requirements for the listed surfaces as specified in paragraphs 4.5.6 and 4.5.6.1 of ACI 117/117R.

Bullfloated-	Areas recessed for mortar setting bed
Float Finish-	Areas not otherwise noted
Trowel Finish-	Areas exposed to view

1.8.1.3 Omitted

1.8.2 Strength Requirements and w/c Ratio

1.8.2.1 Strength Requirements

Specified compressive strength (f'c) shall be as follows:

COMPRESSIVE STRENGTH	STRUCTURE OR PORTION OF STRUCTURE
5000 psi at 28 days	Columns and beams
4000 psi at 28 days	All other concrete

Compressive strength shall be determined in accordance with ASTM C 39/C 39M.

a. Evaluation of Concrete Compressive Strength. Compressive strength specimens (6 by 12 inch cylinders) shall be fabricated by the Contractor and laboratory cured in accordance with ASTM C 31/C 31M and tested in accordance with ASTM C 39/C 39M. The strength of the concrete will be considered satisfactory so long as the average of all sets of three consecutive test results equals or exceeds the specified compressive strength f'c and no individual test result falls below the specified strength f'c by more than 500 psi. A "test" is defined as the average of two companion cylinders, or if only one cylinder is tested, the results of the single cylinder test. Additional analysis or testing, including taking cores and/or load tests may be required at the Contractor's expense when the strength of the concrete in the structure is considered potentially deficient.

b. Investigation of Low-Strength Compressive Test Results. When any strength test of standard-cured test cylinders falls below the specified strength requirement by more than 500 psi or if tests of field-cured cylinders indicate deficiencies in protection and curing, steps shall be taken to assure that the load-carrying capacity of the structure is not jeopardized. When the strength of concrete in place is considered potentially deficient, cores shall be obtained and tested in accordance with ASTM C 42/C 42M. At least three representative cores shall be taken from each member or area of concrete in place that is considered potentially deficient. The location of cores will be determined by the Contracting Officer to least impair the strength of the structure. Concrete in the area represented by the core testing will be considered adequate if the average strength of the cores is equal to at least 85 percent of the specified strength requirement and if no single core is less than 75 percent of the specified strength requirement. Non-destructive tests (tests other than test cylinders or cores) shall not be used as a basis for acceptance or rejection. The Contractor shall perform the coring and repair the holes. Cores will be tested by the Government.

c. Load Tests. If the core tests are inconclusive or impractical to obtain or if structural analysis does not confirm the safety of the structure, load tests may be directed by the Contracting Officer in accordance with the requirements of ACI 318/318R. Concrete work evaluated by structural analysis or by results of a load test as being understrength shall be corrected in a manner satisfactory to the Contracting Officer. All investigations, testing, load tests, and correction of deficiencies shall be performed by and at the expense of the Contractor and must be approved by the Contracting Officer, except that if all concrete is found to be in compliance with the drawings and specifications, the cost of investigations, testing, and load tests will be at the expense of the Government.

1.8.2.2 Water-Cement Ratio

Maximum water-cement ratio (w/c) for normal weight concrete shall be as follows:

WATER-CEMENT RATIO, BY WEIGHT	STRUCTURE OR PORTION OF STRUCTURE
0.45	Slabs cast on grade
0.50	All other concrete

These w/c's may cause higher strengths than that required above for compressive or flexural strength. The maximum w/c required will be the equivalent w/c as determined by conversion from the weight ratio of water to cement plus pozzolan, and ground granulated blast furnace slag (GGBF slag) by the weight equivalency method as described in ACI 211.1. In the case where GGBF slag is used, the weight of the GGBF slag shall be included in the equations of ACI 211.1 for the term P which is used to denote the weight of pozzolan.

1.8.3 Air Entrainment

All normal weight concrete shall be air entrained to contain between 4 and 7 percent total air, except that when the nominal maximum size coarse aggregate is 3/4 inch or smaller it shall be between 4.5 and 7.5 percent. Concrete with specified strength over 5000 psi may have 1.0 percent less air than specified above. Specified air content shall be attained at point of placement into the forms. Air content for normal weight concrete shall be determined in accordance with ASTM C 231.

1.8.4 Slump

Slump of the concrete, as delivered to the point of placement into the forms, shall be within the following limits. Slump shall be determined in accordance with ASTM C 143/C 143M.

Structural Element	Slump Minimum	Slump Maximum
Walls, columns and beams, elevated slbs and toppings	2 in.	4 in.
Foundation walls, substructure walls, footings, slabs on grade	1 in.	3 in.
Any structural concrete approved for placement by pumping:		
At pump	2 in.	6 in.
At discharge of line	1 in.	4 in.

When use of a plasticizing admixture conforming to ASTM C 1017/C 1017M or when a Type F or G high range water reducing admixture conforming to ASTM C 494/C 494M is permitted to increase the slump of concrete, concrete shall have a slump of 2 to 4 inches before the admixture is added and a maximum slump of 8 inches at the point of delivery after the admixture is added.

1.8.5 Concrete Temperature

The temperature of the concrete as delivered shall not exceed 90 degrees F. When the ambient temperature during placing is 40 degrees F or less, or is expected to be at any time within 6 hours after placing, the temperature of the concrete as delivered shall be between 55 and 75 degrees F.

1.8.6 Size of Coarse Aggregate

The largest feasible nominal maximum size aggregate (NMSA) specified in paragraph AGGREGATES shall be used in each placement. However, nominal maximum size of aggregate shall not exceed any of the following: three-fourths of the minimum cover for reinforcing bars, three-fourths of the minimum clear spacing between reinforcing bars, one-fifth of the narrowest dimension between sides of forms, or one-third of the thickness of slabs or toppings.

1.8.7 Special Properties and Products

Concrete may contain admixtures other than air entraining agents, such as water reducers, superplasticizers, or set retarding agents to provide special properties to the concrete, if specified or approved. Any of these materials to be used on the project shall be used in the mix design studies.

1.9 MIXTURE PROPORTIONS

Concrete shall be composed of portland cement, other cementitious and pozzolanic materials as specified, aggregates, water and admixtures as specified.

1.9.1 Proportioning Studies for Normal Weight Concrete

Trial design batches, mixture proportioning studies, and testing requirements for various classes and types of concrete specified shall be the responsibility of the Contractor. Except as specified for flexural strength concrete, mixture proportions shall be based on compressive strength as determined by test specimens fabricated in accordance with ASTM C 192/C 192M and tested in accordance with ASTM C 39/C 39M. Samples of all materials used in mixture proportioning studies shall be representative of those proposed for use in the project and shall be accompanied by the manufacturer's or producer's test reports indicating compliance with these specifications. Trial mixtures having proportions, consistencies, and air content suitable for the work shall be made based on methodology described in ACI 211.1, using at least three different water-cement ratios for each type of mixture, which will produce a range of strength encompassing those required for each class and type of concrete required on the project. The maximum water-cement ratios required in subparagraph Water-Cement Ratio will be the equivalent water-cement ratio as determined by conversion from the weight ratio of water to cement plus pozzolan, and ground granulated blast furnace slag (GGBF slag) by the weight equivalency method as described in ACI 211.1. In the case where GGBF slag is used, the weight of the GGBF slag shall be included in the equations in ACI 211.1 for the term P, which is used to denote the weight of pozzolan. If pozzolan is used in the concrete mixture, the minimum pozzolan content shall be 15 percent by weight of the total cementitious material, and the maximum shall be 35 percent. Laboratory trial mixtures shall be designed for maximum permitted slump and air content. Separate sets of trial mixture studies shall be made for each combination of cementitious materials and each combination of admixtures proposed for use. No combination of either shall be used until

proven by such studies, except that, if approved in writing and otherwise permitted by these specifications, an accelerator or a retarder may be used without separate trial mixture study. Separate trial mixture studies shall also be made for concrete for any conveying or placing method proposed which requires special properties and for concrete to be placed in unusually difficult placing locations. The temperature of concrete in each trial batch shall be reported. For each water-cement ratio, at least three test cylinders for each test age shall be made and cured in accordance with ASTM C 192/C 192M. They shall be tested at 7 and 28 days in accordance with ASTM C 39/C 39M. From these test results, a curve shall be plotted showing the relationship between water-cement ratio and strength for each set of trial mix studies. In addition, a curve shall be plotted showing the relationship between 7 day and 28 day strengths. Each mixture shall be designed to promote easy and suitable concrete placement, consolidation and finishing, and to prevent segregation and excessive bleeding.

1.9.2 Omitted
1.9.3 Omitted

1.9.4 Average Compressive Strength Required for Mixtures

The mixture proportions selected during mixture design studies shall produce a required average compressive strength (f'cr) exceeding the specified compressive strength (f'c) by the amount indicated below. This required average compressive strength, f'cr, will not be a required acceptance criteria during concrete production. However, whenever the daily average compressive strength at 28 days drops below f'cr during concrete production, or daily average 7-day strength drops below a strength correlated with the 28-day f'cr, the mixture shall be adjusted, as approved, to bring the daily average back up to f'cr. During production, the required f'cr shall be adjusted, as appropriate, based on the standard deviation being attained on the job.

1.9.4.1 Computations from Test Records

Where a concrete production facility has test records, a standard deviation shall be established in accordance with the applicable provisions of ACI 214.3R. Test records from which a standard deviation is calculated shall represent materials, quality control procedures, and conditions similar to those expected; shall represent concrete produced to meet a specified strength or strengths (f'c) within 1,000 psi of that specified for proposed work; and shall consist of at least 30 consecutive tests. A strength test shall be the average of the strengths of two cylinders made from the same sample of concrete and tested at 28 days. Required average compressive strength f'cr used as the basis for selection of concrete proportions shall be the larger of the equations that follow using the standard deviation as determined above:

$f'cr = f'c + 1.34S$ where units are in psi

$f'cr = f'c + 2.33S - 500$ where units are in psi

Where S = standard deviation

Where a concrete production facility does not have test records meeting the requirements above but does have a record based on 15 to 29 consecutive tests, a standard deviation shall be established as the product of the calculated standard deviation and a modification factor from the following table:

NUMBER OF TESTS	MODIFICATION FACTOR FOR STANDARD DEVIATION
15	1.16
20	1.08
25	1.03
30 or more	1.00

1.9.4.2 Computations without Previous Test Records

When a concrete production facility does not have sufficient field strength test records for calculation of the standard deviation, the required average strength f'cr shall be determined as follows:

a. If the specified compressive strength f'c is 3,000 to 5,000 psi,

f'cr = f'c + 1,200 psi

1.10 STORAGE OF MATERIALS

Cement and other cementitious materials shall be stored in weathertight buildings, bins, or silos which will exclude moisture and contaminants and keep each material completely separated. Aggregate stockpiles shall be arranged and used in a manner to avoid excessive segregation and to prevent contamination with other materials or with other sizes of aggregates. Aggregate shall not be stored directly on ground unless a sacrificial layer is left undisturbed. Reinforcing bars and accessories shall be stored above the ground on platforms, skids or other supports. Other materials shall be stored in such a manner as to avoid contamination and deterioration. Admixtures which have been in storage at the project site for longer than 6 months or which have been subjected to freezing shall not be used unless retested and proven to meet the specified requirements. Materials shall be capable of being accurately identified after bundles or containers are opened.

1.11 GOVERNMENT ASSURANCE INSPECTION AND TESTING

Day-to day inspection and testing shall be the responsibility of the Contractor Quality Control (CQC) staff. However, representatives of the Contracting Officer can and will inspect construction as considered appropriate and will monitor operations of the Contractor's CQC staff. Government inspection or testing will not relieve the Contractor of any of his CQC responsibilities.

1.11.1 Materials

The Government will sample and test aggregates, cementitious materials, other materials, and concrete to determine compliance with the specifications as considered appropriate. The Contractor shall provide facilities and labor as may be necessary for procurement of representative test samples. Samples of aggregates will be obtained at the point of batching in accordance with ASTM D 75. Other materials will be sampled from storage at the jobsite or from other locations as considered appropriate. Samples may be placed in storage for later testing when appropriate.

1.11.2 Fresh Concrete

Fresh concrete will be sampled as delivered in accordance with ASTM C 172 and tested in accordance with these specifications, as considered necessary.

1.11.3 Hardened Concrete

Tests on hardened concrete will be performed by the Government when such tests are considered necessary.

1.11.4 Inspection

Concrete operations may be tested and inspected by the Government as the project progresses. Failure to detect defective work or material will not prevent rejection later when a defect is discovered nor will it obligate the Government for final acceptance.

PART 2 PRODUCTS

2.1 CEMENTITIOUS MATERIALS

Cementitious Materials shall be portland cement, portland-pozzolan cement, portland blast-furnace slag cement, or portland cement in combination with pozzolan or ground granulated blast furnace slag and shall conform to appropriate specifications listed below. Use of cementitious materials in concrete which will have surfaces exposed in the completed structure shall be restricted so there is no change in color, source, or type of cementitious material.

2.1.1 Portland Cement

ASTM C 150, Type I with a maximum 15 percent amount of tricalcium aluminate, or Type II.

2.1.2 Omitted
2.1.3 Omitted

2.1.4 Pozzolan (Fly Ash)

ASTM C 618, Class F with the optional requirements for multiple factor, drying shrinkage, and uniformity from Table 2A of ASTM C 618. If pozzolan is used, it shall never be less than 15 percent nor more than 35 percent by weight of the total cementitious material. The Contractor shall comply with EPA requirements in accordance with Section 01670 RECYCLED / RECOVERED MATERIALS.

2.1.5 Ground Granulated Blast-Furnace (GGBF) Slag

ASTM C 989, Grade 120. If used, not less tban 25 percent nor more tban 50 percent by weight.-

2.2 AGGREGATES

Aggregates shall conform to the following.

2.2.1 Fine Aggregate

Fine aggregate shall conform to the quality and gradation requirements of ASTM C 33.

2.2.2 Coarse Aggregate

Coarse aggregate shall conform to ASTM C 33, Class 5S, size designation 8 for topping on balcony slabs and 59 for all other concrete.

2.3 CHEMICAL ADMIXTURES

Chemical admixtures, when required or permitted, shall conform to the appropriate specification listed. Admixtures shall be furnished in liquid form and of suitable concentration for easy, accurate control of dispensing.

2.3.1 Air-Entraining Admixture

ASTM C 260 and shall consistently entrain the air content in the specified ranges under field conditions.

2.3.2 Accelerating Admixture

ASTM C 494/C 494M, Type C or E, except that calcium chloride or admixtures containing calcium chloride shall not be used.

2.3.3 Water-Reducing or Retarding Admixture

ASTM C 494/C 494M, Type A, B, or D, except that the 6-month and 1-year compressive and flexural strength tests are waived.

2.3.4 High-Range Water Reducer

ASTM C 494/C 494M, Type F or G, except that the 6-month and 1-year strength requirements are waived. The admixture shall be used only when approved in writing, such approval being contingent upon particular mixture control as described in the Contractor's Quality Control Plan and upon performance of separate mixture design studies.

2.3.5 Omitted
2.3.6 Omitted

2.3.7 Other Chemical Admixtures

Chemical admixtures for use in producing flowing concrete shall comply with ASTM C 1017/C 1017M, Type I or II. These admixtures shall be used only when approved in writing, such approval being contingent upon particular mixture control as described in the Contractor's Quality Control Plan and upon performance of separate mixture design studies.

2.4 CURING MATERIALS

2.4.1 Impervious-Sheet

Impervious-sheet materials shall conform to ASTM C 171, type optional, except, that polyethylene sheet shall not be used.

2.4.2 Membrane-Forming Compound

Membrane-Forming curing compound shall conform to ASTM C 309, Type 1-D or 2, except that only a styrene acrylate or chlorinated rubber compound meeting Class B requirements shall be used for surfaces that are to be painted or are to receive bituminous roofing, or waterproofing, or floors

that are to receive adhesive applications of resilient flooring. The curing compound selected shall be compatible with any subsequent paint, roofing, waterproofing, or flooring specified. Nonpigmented compound shall contain a fugitive dye, and shall have the reflective requirements in ASTM C 309 waived.

2.4.3 Burlap and Cotton Mat

Burlap and cotton mat used for curing shall conform to AASHTO M 182.

2.5 WATER

Water for mixing and curing shall be fresh, clean, potable, and free of injurious amounts of oil, acid, salt, or alkali, except that non-potable water may be used if it meets the requirements of COE CRD-C 400.

2.6 NONSHRINK GROUT

Nonshrink grout shall conform to ASTM C 1107, Grade B, and shall be a commercial formulation suitable for the proposed application.

2.7 OMITTED

2.8 LATEX BONDING AGENT

Latex agents for bonding fresh to hardened concrete shall conform to ASTM C 1059.

2.9 EPOXY RESIN

Epoxy resins for use in repairs shall conform to ASTM C 881, Type V, Grade 2. Class as appropriate to the existing ambient and surface temperatures.

2.10 EMBEDDED ITEMS

Embedded items shall be of the size and type indicated or as needed for the application. Dovetail slots shall be galvanized steel. Hangers for suspended ceilings shall be as specified in Section 09510 ACOUSTICAL CEILINGS. Inserts for shelf angles and bolt hangers shall be of malleable iron or cast or wrought steel.

2.11 OMITTED

2.12 PERIMETER INSULATION

Perimeter insulation shall be polystyrene conforming to ASTM C 578, Type II; polyurethane conforming to ASTM C 591, Type II; or cellular glass conforming to ASTM C 552, Type I or IV. The Contractor shall comply with EPA requirements in accordance with Section 01670 RECYCLED / RECOVERED MATERIALS.

2.13 VAPOR BARRIER

Vapor barrier shall be polyethylene sheeting with a minimum thickness of 6 mils or other equivalent material having a vapor permeance rating not exceeding 0.5 perms as determined in accordance with ASTM E 96.

2.14 JOINT MATERIALS

2.14.1 Joint Fillers and Sealers

Expansion joint fillers shall be preformed materials conforming to ASTM D 1751. Materials for waterstops shall be in accordance with Section 03150A EXPANSION JOINTS, CONTRACTION JOINTS, AND WATERSTOPS. Materials for and sealing of joints shall conform to the requirements of Section 07900A JOINT SEALING.

2.14.2 Contraction Joints in Slabs

A

Sawable type contraction joint inserts shall conform to COE CRD-C 540. Nonsawable joint inserts shall have sufficient stiffness to permit placement in plastic concrete without undue deviation from a straight line and shall conform to the physical requirements of COE CRD-C 540, with the exception of Section 3.4 "Resistance to Sawing". Plastic inserts shall be polyvinyl chloride conforming to the materials requirements of COE CRD-C 572.

PART 3 EXECUTION

3.1 PREPARATION FOR PLACING

Before commencing concrete placement, the following shall be performed. Surfaces to receive concrete shall be clean and free from frost, ice, mud, and water. Forms shall be in place, cleaned, coated, and adequately supported, in accordance with Section 03100A STRUCTURAL CONCRETE FORMWORK. Reinforcing steel shall be in place, cleaned, tied, and adequately supported, in accordance with Section 03200A CONCRETE REINFORCEMENT. Transporting and conveying equipment shall be in-place, ready for use, clean, and free of hardened concrete and foreign material. Equipment for consolidating concrete shall be at the placing site and in proper working order. Equipment and material for curing and for protecting concrete from weather or mechanical damage shall be at the placing site, in proper working condition and in sufficient amount for the entire placement. When hot, windy conditions during concreting appear probable, equipment and material shall be at the placing site to provide windbreaks, shading, fogging, or other action to prevent plastic shrinkage cracking or other damaging drying of the concrete.

3.1.1 Foundations

3.1.1.1 Concrete on Earth Foundations

Earth (subgrade, base, or subbase courses) surfaces upon which concrete is to be placed shall be clean, damp, and free from debris, frost, ice, and standing or running water. Prior to placement of concrete, the foundation shall be well drained and shall be satisfactorily graded and uniformly compacted.

3.1.1.2 Omitted

3.1.1.3 Excavated Surfaces in Lieu of Forms

Concrete for footings may be placed directly against the soil provided the earth or rock has been carefully trimmed, is uniform and stable, and meets the compaction requirements of Section 02315A EXCAVATION, FILLING, AND BACKFILLING FOR BUILDINGS. The concrete shall be placed without becoming contaminated by loose material, and the outline of the concrete shall be

within the specified tolerances.

3.1.2 Previously Placed Concrete

3.1.2.1 Omitted
3.1.2.2 Omitted
3.1.2.3 Omitted
3.1.2.4 Omitted

3.1.2.5 Preparation of Previously Placed Concrete

Concrete surfaces to which other concrete is to be bonded shall be abraded in an approved manner that will expose sound aggregate uniformly without damaging the concrete. Laitance and loose particles shall be removed. Surfaces shall be thoroughly washed and shall be moist but without free water when concrete is placed.

3.1.3 Vapor Barrier

Vapor barrier shall be provided beneath the interior on-grade concrete floor slabs. The greatest widths and lengths practicable shall be used to eliminate joints wherever possible. Joints shall be lapped a minimum of 12 inches. Torn, punctured, or damaged vapor barrier material shall be removed and new vapor barrier shall be provided prior to placing concrete. For minor repairs, patches may be made using laps of at least 12 inches. Lapped joints shall be sealed and edges patched with pressure-sensitive adhesive or tape not less than 2 inches wide and compatible with the membrane. Vapor barrier shall be placed directly on underlying subgrade, base course, or capillary water barrier, unless it consists of crushed material or large granular material which could puncture the vapor barrier. In this case, the surface shall be choked with a light layer of sand, as approved, before placing the vapor barrier. Concrete placement shall be controlled so as to prevent damage to the vapor barrier, or any covering sand.

3.1.4 Perimeter Insulation

Perimeter insulation shall be installed at locations indicated. Adhesive shall be used where insulation is applied to the interior surface of foundation walls and may be used for exterior application.

3.1.5 Embedded Items

Before placement of concrete, care shall be taken to determine that all embedded items are firmly and securely fastened in place as indicated on the drawings, or required. Conduit and other embedded items shall be clean and free of oil and other foreign matter such as loose coatings or rust, paint, and scale. The embedding of wood in concrete will be permitted only when specifically authorized or directed. The embedding of aluminum in concrete is prohibited. Voids in sleeves, inserts, and anchor slots shall be filled temporarily with readily removable materials to prevent the entry of concrete into voids. Welding shall not be performed on embedded metals within 1 feet of the surface of the concrete. Tack welding shall not be performed on or to embedded items.

3.2 CONCRETE PRODUCTION

3.2.1 Batching, Mixing, and Transporting Concrete

Concrete shall either be batched and mixed onsite or shall be furnished from a ready-mixed concrete plant. Ready-mixed concrete shall be batched, mixed, and transported in accordance with ASTM C 94/C 94M, except as otherwise specified. Truck mixers, agitators, and nonagitating transporting units shall comply with NRMCA TMMB 100. Ready-mix plant equipment and facilities shall be certified in accordance with NRMCA QC 3. Approved batch tickets shall be furnished for each load of ready-mixed concrete. Site-mixed concrete shall conform to the following subparagraphs.

3.3 OMITTED
3.4 OMITTED
3.5 OMITTED

3.6 TRANSPORTING CONCRETE TO PROJECT SITE

Concrete shall be transported to the placing site in truck mixers, or by approved pumping equipment.

3.7 CONVEYING CONCRETE ON SITE

Concrete shall be conveyed from mixer or transporting unit to forms as rapidly as possible and within the time interval specified by methods which will prevent segregation or loss of ingredients using following equipment. Conveying equipment shall be cleaned before each placement.

3.7.1 Buckets

The interior hopper slope shall be not less than 58 degrees from the horizontal, the minimum dimension of the clear gate opening shall be at least 5 times the nominal maximum-size aggregate, and the area of the gate opening shall not be less than 2 square feet.The maximum dimension of the gate opening shall not be greater than twice the minimum dimension. The bucket gates shall be essentially grout tight when closed and may be manually, pneumatically, or hydraulically operated except that buckets larger than 2 cubic yardsshall not be manually operated. The design of the bucket shall provide means for positive regulation of the amount and rate of deposit of concrete in each dumping position.

3.7.2 Omitted
3.7.3 Omitted

3.7.4 Chutes

When concrete can be placed directly from a truck mixer, agitator, or nonagitating equipment, the chutes normally attached to this equipment by the manufacturer may be used. A discharge deflector shall be used when required by the Contracting Officer. Separate chutes and other similar equipment will not be permitted for conveying concrete.

3.7.5 Omitted

3.7.6 Concrete Pumps

Concrete may be conveyed by positive displacement pump when approved. The

pumping equipment shall be piston or squeeze pressure type; pneumatic placing equipment shall not be used. The pipeline shall be rigid steel pipe or heavy-duty flexible hose. The inside diameter of the pipe shall be at least 3 times the nominal maximum-size coarse aggregate in the concrete mixture to be pumped but not less than 4 inches. Aluminum pipe shall not be used.

3.8 PLACING CONCRETE

Mixed concrete shall be discharged within 1-1/2 hours or before the mixer drum has revolved 300 revolutions, whichever comes first after the introduction of the mixing water to the cement and aggregates. When the concrete temperature exceeds 85 degrees F, the time shall be reduced to 45 minutes. Concrete shall be placed within 15 minutes after it has been discharged from the transporting unit. Concrete shall be handled from mixer or transporting unit to forms in a continuous manner until the approved unit of operation is completed. Adequate scaffolding, ramps and walkways shall be provided so that personnel and equipment are not supported by in-place reinforcement. Placing will not be permitted when the sun, heat, wind, or limitations of facilities furnished by the Contractor prevent proper consolidation, finishing and curing. Sufficient placing capacity shall be provided so that concrete can be kept free of cold joints.

3.8.1 Depositing Concrete

Concrete shall be deposited as close as possible to its final position in the forms, and there shall be no vertical drop greater than 5 feet except where suitable equipment is provided to prevent segregation and where specifically authorized. Depositing of the concrete shall be so regulated that it will be effectively consolidated in horizontal layers not more than 12 inches thick, except that all slabs shall be placed in a single layer. Concrete to receive other construction shall be screeded to the proper level. Concrete shall be deposited continuously in one layer or in layers so that fresh concrete is deposited on in-place concrete that is still plastic. Fresh concrete shall not be deposited on concrete that has hardened sufficiently to cause formation of seams or planes of weakness within the section. Concrete that has surface dried, partially hardened, or contains foreign material shall not be used. When temporary spreaders are used in the forms, the spreaders shall be removed as their service becomes unnecessary. Concrete shall not be placed in slabs over columns and walls until concrete in columns and walls has been in-place at least two hours or until the concrete begins to lose its plasticity. Concrete for beams, girders, brackets, column capitals, haunches, and drop panels shall be placed at the same time as concrete for adjoining slabs.

3.8.2 Consolidation

Immediately after placing, each layer of concrete shall be consolidated by internal vibrators, except for slabs 4 inches thick or less. The vibrators shall at all times be adequate in effectiveness and number to properly consolidate the concrete; a spare vibrator shall be kept at the jobsite during all concrete placing operations. The vibrators shall have a frequency of not less than 10,000 vibrations per minute, an amplitude of at least 0.025 inch, and the head diameter shall be appropriate for the structural member and the concrete mixture being placed. Vibrators shall be inserted vertically at uniform spacing over the area of placement. The distance between insertions shall be approximately 1-1/2 times the radius of action of the vibrator so that the area being vibrated will overlap the

adjacent just-vibrated area by a reasonable amount. The vibrator shall penetrate rapidly to the bottom of the layer and at least 6 inches into the preceding layer if there is such. Vibrator shall be held stationary until the concrete is consolidated and then vertically withdrawn slowly while operating. Form vibrators shall not be used unless specifically approved and unless forms are constructed to withstand their use. Vibrators shall not be used to move concrete within the forms. Slabs 4 inches and less in thickness shall be consolidated by properly designed vibrating screeds or other approved technique. Frequency and amplitude of vibrators shall be determined in accordance with COE CRD-C 521. Grate tampers ("jitterbugs") shall not be used.

3.8.3 Cold Weather Requirements

Special protection measures, approved by the Contracting Officer, shall be used if freezing temperatures are anticipated before the expiration of the specified curing period. The ambient temperature of the air where concrete is to be placed and the temperature of surfaces to receive concrete shall be not less than 40 degrees F. The temperature of the concrete when placed shall be not less than 50 degrees F nor more than 75 degrees F. Heating of the mixing water or aggregates will be required to regulate the concrete placing temperature. Materials entering the mixer shall be free from ice, snow, or frozen lumps. Salt, chemicals or other materials shall not be incorporated in the concrete to prevent freezing. Upon written approval, an accelerating admixture conforming to ASTM C 494/C 494M, Type C or E may be used, provided it contains no calcium chloride. Calcium chloride shall not be used.

3.8.4 Hot Weather Requirements

When the ambient temperature during concrete placing is expected to exceed 85 degrees F, the concrete shall be placed and finished with procedures previously submitted and as specified herein. The concrete temperature at time of delivery to the forms shall not exceed the temperature shown in the table below when measured in accordance with ASTM C 1064/C 1064M. Cooling of the mixing water or aggregates or placing concrete in the cooler part of the day may be required to obtain an adequate placing temperature. A retarder may be used, as approved, to facilitate placing and finishing. Steel forms and reinforcements shall be cooled as approved prior to concrete placement when steel temperatures are greater than 120 degrees F. Conveying and placing equipment shall be cooled if necessary to maintain proper concrete-placing temperature.

Maximum Allowable Concrete Placing Temperature

Relative Humidity, Percent, During Time of Concrete Placement	Maximum Allowable Concrete Temperature Degrees
Greater than 60	90 F
40-60	85 F
Less than 40	80 F

3.8.5 Prevention of Plastic Shrinkage Cracking

During hot weather with low humidity, and particularly with appreciable wind, as well as interior placements when space heaters produce low

humidity, the Contractor shall be alert to the tendency for plastic shrinkage cracks to develop and shall institute measures to prevent this. Particular care shall be taken if plastic shrinkage cracking is potentially imminent and especially if it has developed during a previous placement. Periods of high potential for plastic shrinkage cracking can be anticipated by use of Fig. 2.1.5 of ACI 305R. In addition the concrete placement shall be further protected by erecting shades and windbreaks and by applying fog sprays of water, sprinkling, ponding or wet covering. Plastic shrinkage cracks that occur shall be filled by injection of epoxy resin as directed, after the concrete hardens. Plastic shrinkage cracks shall never be troweled over or filled with slurry.

3.8.6 Omitted
3.8.7 Omitted

3.8.8 Placing Flowable Concrete

If a plasticizing admixture conforming to ASTM C 1017/C 1017M is used or if a Type F or G high range water reducing admixture is permitted to increase the slump, the concrete shall meet all requirements of paragraph GENERAL REQUIREMENTS in PART 1. Extreme care shall be used in conveying and placing the concrete to avoid segregation. Consolidation and finishing shall meet all requirements of paragraphs Placing Concrete, Finishing Formed Surfaces, and Finishing Unformed Surfaces. No relaxation of requirements to accommodate flowable concrete will be permitted.

3.9 JOINTS

Joints shall be located and constructed as indicated or approved. Joints not indicated on the drawings shall be located and constructed to minimize the impact on the strength of the structure. In general, such joints shall be located near the middle of the spans of supported slabs, beams, and girders unless a beam intersects a girder at this point, in which case the joint in the girder shall be offset a distance equal to twice the width of the beam. Joints in walls and columns shall be at the underside of floors, slabs, beams, or girders and at the tops of footings or floor slabs, unless otherwise approved. Joints shall be perpendicular to the main reinforcement. All reinforcement shall be continued across joints; except that reinforcement or other fixed metal items shall not be continuous through expansion joints, or through construction or contraction joints in slabs on grade. Reinforcement shall be 2 inches clear from each joint. Except where otherwise indicated, construction joints between interior slabs on grade and vertical surfaces shall consist of 30 pound asphalt-saturated felt, extending for the full depth of the slab. The perimeters of the slabs shall be free of fins, rough edges, spalling, or other unsightly appearance. Reservoir for sealant for construction and contraction joints in slabs shall be formed to the dimensions shown on the drawings by removing snap-out joint-forming inserts, by sawing sawable inserts, or by sawing to widen the top portion of sawed joints. Joints to be sealed shall be cleaned and sealed as indicated and in accordance with Section 07900A JOINT SEALING.

3.9.1 Construction Joints

For concrete other than slabs on grade, construction joints shall be located so that the unit of operation does not exceed 20 feet. Concrete shall be placed continuously so that each unit is monolithic in construction. Fresh concrete shall not be placed against adjacent hardened concrete until it is at least 24 hours old. Construction joints shall be

located as indicated or approved. Where concrete work is interrupted by weather, end of work shift or other similar type of delay, location and type of construction joint shall be subject to approval of the Contracting Officer. Unless otherwise indicated and except for slabs on grade, reinforcing steel shall extend through construction joints. Construction joints in slabs on grade shall be keyed or doweled as shown. Concrete columns, walls, or piers shall be in place at least 2 hours, or until the concrete begins to lose its plasticity, before placing concrete for beams, girders, or slabs thereon. In walls having door or window openings, lifts shall terminate at the top and bottom of the opening. Other lifts shall terminate at such levels as to conform to structural requirements or architectural details. Where horizontal construction joints in walls or columns are required, a strip of 1 inchsquare-edge lumber, bevelled and oiled to facilitate removal, shall be tacked to the inside of the forms at the construction joint. Concrete shall be placed to a point 1 inch above the underside of the strip. The strip shall be removed 1 hour after the concrete has been placed, and any irregularities in the joint line shall be leveled off with a wood float, and all laitance shall be removed. Prior to placing additional concrete, horizontal construction joints shall be prepared as specified in paragraph Previously Placed Concrete.

3.9.2 Contraction Joints in Slabs on Grade

Contraction joints shall be located and detailed as shown on the drawings. Contraction Joints shall be produced by forming a weakened plane in the concrete slab by use of rigid inserts impressed in the concrete during placing operations, use of snap-out plastic joint forming inserts, or sawing a continuous slot with a concrete saw. Regardless of method used to produce the weakened plane, it shall be 1/4 the depth of the slab thickness and between 1/8 and 3/16 inch wide. For saw-cut joints, cutting shall be timed properly with the set of the concrete. Cutting shall be started as soon as the concrete has hardened sufficiently to prevent ravelling of the edges of the saw cut. Cutting shall be completed before shrinkage stresses become sufficient to produce cracking. Reservoir for joint sealant shall be formed as previously specified.

3.9.3 Expansion Joints

Installation of expansion joints and sealing of these joints shall conform to the requirements of Section 03150A EXPANSION JOINTS AND CONTRACTION JOINTS, and Section 07900A JOINT SEALING.

3.9.4 Omitted

3.9.5 Dowels and Tie Bars

Dowels and tie bars shall be installed at the locations shown on the drawings and to the details shown, using materials and procedures specified in Section 03200A CONCRETE REINFORCEMENT and herein. Conventional smooth "paving" dowels shall be installed in slabs using approved methods to hold the dowel in place during concreting within a maximum alignment tolerance of 1/8 inch in 12 inches. "Structural" type deformed bar dowels, or tie bars, shall be installed to meet the specified tolerances. Care shall be taken during placing adjacent to and around dowels and tie bars to ensure there is no displacement of the dowel or tie bar and that the concrete completely embeds the dowel or tie bar and is thoroughly consolidated.

3.10 FINISHING FORMED SURFACES

Forms, form materials, and form construction are specified in Section 03100A STRUCTURAL CONCRETE FORMWORK. Finishing of formed surfaces shall be as specified herein. Unless another type of architectural or special finish is specified, surfaces shall be left with the texture imparted by the forms except that defective surfaces shall be repaired. Unless painting of surfaces is required, uniform color of the concrete shall be maintained by use of only one mixture without changes in materials or proportions for any structure or portion of structure that requires a Class A or B finish. Except for major defects, as defined hereinafter, surface defects shall be repaired as specified herein within 24 hours after forms are removed. Repairs of the so-called "plaster-type" will not be permitted in any location. Tolerances of formed surfaces shall conform to the requirements of ACI 117/117R. These tolerances apply to the finished concrete surface, not to the forms themselves; forms shall be set true to line and grade. Form tie holes requiring repair and other defects whose depth is at least as great as their surface diameter shall be repaired as specified in paragraph Damp-Pack Mortar Repair. Defects whose surface diameter is greater than their depth shall be repaired as specified in paragraph Repair of Major Defects. Repairs shall be finished flush with adjacent surfaces and with the same surface texture. The cement used for all repairs shall be a blend of job cement with white cement proportioned so that the final color after curing and aging will be the same as the adjacent concrete. Concrete with excessive honeycomb, or other defects which affect the strength of the member, will be rejected. Repairs shall be demonstrated to be acceptable and free from cracks or loose or drummy areas at the completion of the contract and, for Class A and B Finishes, shall be inconspicuous. Repairs not meeting these requirements will be rejected and shall be replaced.

3.10.1 Omitted

3.10.2 Class C Finish

Class C finish is required for all formal concrete. Fins, ravelings, and loose material shall be removed, and, except as otherwise indicated or as specified in Section 03100A STRUCTURAL CONCRETE FORMWORK, holes left by removal of form ties shall be reamed and filled. Honeycomb and other defects more than 1/2 inch deep or more than 2 inches in diameter shall be repaired. Defects more than 2 inches in diameter shall be cut back to sound concrete, but in all cases at least 1 inch deep.

3.10.3 Omitted

3.11 REPAIRS

3.11.1 Damp-Pack Mortar Repair

Form tie holes requiring repair and other defects whose depth is at least as great as their surface diameter but not over 4 inchesshall be repaired by the damp-pack mortar method. Form tie holes shall be reamed and other similar defects shall be cut out to sound concrete. The void shall then be thoroughly cleaned, thoroughly wetted, brush-coated with a thin coat of neat cement grout and filled with mortar. Mortar shall be a stiff mix of 1 part portland cement to 2 parts fine aggregate passing the No. 16 mesh sieve, and minimum amount of water. Only sufficient water shall be used to produce a mortar which, when used, will stick together on being molded into a ball by a slight pressure of the hands and will not exude water but will

leave the hands damp. Mortar shall be mixed and allowed to stand for 30 to 45 minutes before use with remixing performed immediately prior to use. Mortar shall be thoroughly tamped in place in thin layers using a hammer and hardwood block. Holes passing entirely through walls shall be completely filled from the inside face by forcing mortar through to the outside face. All holes shall be packed full. Damp-pack repairs shall be moist cured for at least 48 hours.

3.11.2 Repair of Major Defects

Major defects will be considered to be those more than 1/2 inch deep or, for Class A and B finishes, more than 1/2 inch in diameter and, for Class C and D finishes, more than 2 inches in diameter. Also included are any defects of any kind whose depth is over 4 inches or whose surface diameter is greater than their depth. Major defects shall be repaired as specified below.

3.11.2.1 Surface Application of Mortar Repair

Defective concrete shall be removed, and removal shall extend into completely sound concrete. Approved equipment and procedures which will not cause cracking or microcracking of the sound concrete shall be used. If reinforcement is encountered, concrete shall be removed so as to expose the reinforcement for at least 2 inches on all sides. All such defective areas greater than 12 square inchesshall be outlined by saw cuts at least 1 inch deep. Defective areas less than 12 square inches shall be outlined by a 1 inch deep cut with a core drill in lieu of sawing. All saw cuts shall be straight lines in a rectangular pattern in line with the formwork panels. After concrete removal, the surface shall be thoroughly cleaned by high pressure washing to remove all loose material. Surfaces shall be kept continually saturated for the first 12 of the 24 hours immediately before placing mortar and shall be damp but not wet at the time of commencing mortar placement. The Contractor, at his option, may use either hand-placed mortar or mortar placed with a mortar gun. If hand-placed mortar is used, the edges of the cut shall be perpendicular to the surface of the concrete. The prepared area shall be brush-coated with a thin coat of neat cement grout. The repair shall then be made using a stiff mortar, preshrunk by allowing the mixed mortar to stand for 30 to 45 minutes and then remixed, thoroughly tamped into place in thin layers. If hand-placed mortar is used, the Contractor shall test each repair area for drumminess by firm tapping with a hammer and shall inspect for cracks, both in the presence of the Contracting Officer's representative, immediately before completion of the contract, and shall replace any showing drumminess or cracking. If mortar placed with a mortar gun is used, the gun shall be a small compressed air-operated gun to which the mortar is slowly hand fed and which applies the mortar to the surface as a high-pressure stream, as approved. Repairs made using shotcrete equipment will not be accepted. The mortar used shall be the same mortar as specified for damp-pack mortar repair. If gun-placed mortar is used, the edges of the cut shall be beveled toward the center at a slope of 1:1. All surface applied mortar repairs shall be continuously moist cured for at least 7 days. Moist curing shall consist of several layers of saturated burlap applied to the surface immediately after placement is complete and covered with polyethylene sheeting, all held closely in place by a sheet of plywood or similar material rigidly braced against it. Burlap shall be kept continually wet.

3.11.2.2 Repair of Deep and Large Defects

Deep and large defects will be those that are more than 6 inches deep and also have an average diameter at the surface more than 18 inches or that are otherwise so identified by the Project Office. That portion of the structure shall be removed and replaced.

3.12 FINISHING UNFORMED SURFACES

The finish of all unformed surfaces shall meet the requirements of paragraph Tolerances in PART 1, when tested as specified herein.

3.12.1 General

The ambient temperature of spaces adjacent to unformed surfaces being finished and of the base on which concrete will be placed shall be not less than 50 degrees F. In hot weather all requirements of paragraphs Hot Weather Requirements and Prevention of Plastic Shrinkage Cracking shall be met. Unformed surfaces that are not to be covered by additional concrete or backfill shall have a float finish, with additional finishing as specified below, and shall be true to the elevation shown on the drawings. Surfaces to receive additional concrete or backfill shall be brought to the elevation shown on the drawings, properly consolidated, and left true and regular. Unless otherwise shown on the drawings, exterior surfaces shall be sloped for drainage, as directed. Where drains are provided, interior floors shall be evenly sloped to the drains. Joints shall be carefully made with a jointing or edging tool. The finished surfaces shall be protected from stains or abrasions. Grate tampers or "jitterbugs" shall not be used for any surfaces. The dusting of surfaces with dry cement or other materials or the addition of any water during finishing shall not be permitted. If bleedwater is present prior to finishing, the excess water shall be carefully dragged off or removed by absorption with porous materials such as burlap. During finishing operations, extreme care shall be taken to prevent over finishing or working water into the surface; this can cause "crazing" (surface shrinkage cracks which appear after hardening) of the surface. Any slabs with surfaces which exhibit significant crazing shall be removed and replaced. During finishing operations, surfaces shall be checked with a 10 foot straightedge, applied in both directions at regular intervals while the concrete is still plastic, to detect high or low areas.

3.12.2 Rough Slab Finish

As a first finishing operation for unformed surfaces and as final finish for slabs to receive mortar setting beds, the surface shall receive a rough slab finish prepared as follows. The concrete shall be uniformly placed across the slab area, consolidated as previously specified, and then screeded with straightedge strikeoffs immediately after consolidation to bring the surface to the required finish level with no coarse aggregate visible. Side forms and screed rails shall be provided, rigidly supported, and set to exact line and grade. Allowable tolerances for finished surfaces apply only to the hardened concrete, not to forms or screed rails. Forms and screed rails shall be set true to line and grade. "Wet screeds" shall not be used.

3.12.3 Floated Finish

Slabs to receive more than a rough slab finish shall next be given a wood float finish. The screeding shall be followed immediately by darbying or

bull floating before bleeding water is present, to bring the surface to a true, even plane. Then, after the concrete has stiffened so that it will withstand a man's weight without imprint of more than 1/4 inch and the water sheen has disappeared, it shall be floated to a true and even plane free of ridges. Floating shall be performed by use of suitable hand floats or power driven equipment. Sufficient pressure shall be used on the floats to bring a film of moisture to the surface. Hand floats shall be made of wood, magnesium, or aluminum. Lightweight concrete or concrete that exhibits stickiness shall be floated with a magnesium float. Care shall be taken to prevent over-finishing or incorporating water into the surface.

3.12.4 Troweled Finish

All floor areas exposed to view in the finished structure shall be given a trowel finish. After floating is complete and after the surface moisture has disappeared, unformed surfaces shall be steel-troweled to a smooth, even, dense finish, free from blemishes including trowel marks. In lieu of hand finishing, an approved power finishing machine may be used in accordance with the directions of the machine manufacturer. Additional trowelings shall be performed, either by hand or machine until the surface has been troweled 4 times, with waiting period between each. Care shall be taken to prevent blistering and if such occurs, troweling shall immediately be stopped and operations and surfaces corrected. A final hard steel troweling shall be done by hand, with the trowel tipped, and using hard pressure, when the surface is at a point that the trowel will produce a ringing sound. The finished surface shall be thoroughly consolidated and shall be essentially free of trowel marks and be uniform in texture and appearance. The concrete mixture used for troweled finished areas shall be adjusted, if necessary, in order to provide sufficient fines (cementitious material and fine sand) to finish properly.

3.12.5 Omitted

3.12.6 Non-Slip Finish

Non-slip floors shall be constructed in accordance with the following subparagraphs.

3.12.6.1 Broomed

Exterior walking surfaces shall be given a broomed finish. After floating, the surface shall be lightly steel troweled, and then carefully scored by pulling a hair push-type broom across the surface. Brooming shall be transverse to traffic or at right angles to the slope of the slab. After the end of the curing period, the surface shall be vigorously broomed with a coarse fiber broom to remove all loose or semi-detached particles.

3.12.7 Topping on Precast Floor Slabs

Areas as indicated on the drawings shall have floors constructed with topping applied to precast slabs. Floor shall be constructed by placing a bonded topping on precast autoclaved aerated concrete (PAAC) balcony slab specified in Section 03415 PRECAST-AUTOCLAVED AERATED CONCRETE. The floor topping mixture shall have a specified compressive strength of 5000 psi at 28 days, a 2 inch maximum slump, 3/8 inch maximum size coarse aggregate, and shall be proportioned to obtain required finishability. The surface of the base slab shall be thoroughly cleaned by sandblasting or high-pressure waterjet immediately before placing topping. The temperature of the fresh concrete topping shall not vary more than 9 degrees F plus or minus from

the temperature of the base slab. The ambient temperature of the space adjacent to the concrete placement and of the base slab shall be between 50 and 86 degrees F. The base slab shall be kept continuously wet for the first 12 hours during the 24 hour period immediately prior to placing the finished floor. After all free water has evaporated or has been removed from the surface, a grout shall be scrubbed in. The grout shall be a 1:1 mixture of portland cement and sand passing the 1/8 inch sieve mixed to a creamlike consistency. The grout shall be scrubbed into the surface just ahead of the concrete topping placing operation. While the grout is still damp, the top course shall be spread and screeded and darbied or bull floated. When the surface moisture has disappeared, the surface shall then be floated with disc-type power float with integral impact mechanism followed by a minimum of two power trowelings. The surface shall be broomed to produce a non-slip surface. Joints shall be formed to match those in the base slab. Concrete shall be maintained in a moist condition and shall be protected against rapid temperature change, mechanical injury, and injury from rain or water, for a curing period of not less than 10 days. Concrete shall be maintained in a moist condition at temperatures above 50 and below 86 degrees F throughout the specified curing period. Concrete shall be protected from a temperature change greater than 5 degrees F per hour and from rapid drying for the first 24 hours following the removal of temperature protection. Curing activities shall be started immediately as soon as free water has disappeared from the surface of the concrete after placing and finishing. Curing shall be moist curing accomplished by the following method. Surfaces shall be covered with a double layer of burlap, wetted before placing, and overlapped at least 6 inches. Burlap shall be kept continually wet and in intimate contact with the surface. Burlap shall be kept covered with a polyethylene sheeting at least 4 mils thick. All traffic shall be kept from the topping during the curing period.

3.13 OMITTED

3.14 EXTERIOR SLAB AND RELATED ITEMS

3.14.1 Omitted

3.14.2 Sidewalks Adjacent to Buildings

Concrete shall be 4 inches minimum thickness. Contraction joints shall be provided at 5 feet spaces unless otherwise indicated. Contraction joints shall be cut 1 inch deep with a jointing tool after the surface has been finished. Transverse expansion joints 1/2 inch thick shall be provided at changes in direction and where sidewalk abuts curbs, steps, rigid pavement, or other similar structures. Sidewalks shall be given a lightly broomed finish. A transverse slope of 1/4 inch per foot shall be provided, unless otherwise indicated. Variations in cross section shall be limited to 1/4 inch in 5 feet.

3.15 CURING AND PROTECTION

3.15.1 General

Concrete shall be cured by an approved method for the period of time given below:

All other concrete	7 days

Immediately after placement, concrete shall be protected from premature

drying, extremes in temperatures, rapid temperature change, mechanical injury and damage from rain and flowing water for the duration of the curing period. Air and forms in contact with concrete shall be maintained at a temperature above 50 degrees F for the first 3 days and at a temperature above 32 degrees F for the remainder of the specified curing period. Exhaust fumes from combustion heating units shall be vented to the outside of the enclosure, and heaters and ducts shall be placed and directed so as not to cause areas of overheating and drying of concrete surfaces or to create fire hazards. Materials and equipment needed for adequate curing and protection shall be available and at the site prior to placing concrete. No fire or excessive heat, including welding, shall be permitted near or in direct contact with the concrete at any time. Except as otherwise permitted by paragraph Membrane Forming Curing Compounds, moist curing shall be provided for any areas to receive floor hardener, any paint or other applied coating, or to which other concrete is to be bonded. Except for plastic coated burlap, impervious sheeting alone shall not be used for curing.

3.15.2 Moist Curing

Concrete to be moist-cured shall be maintained continuously wet for the entire curing period, commencing immediately after finishing. If water or curing materials used stain or discolor concrete surfaces which are to be permanently exposed, the concrete surfaces shall be cleaned as approved. When wooden forms are left in place during curing, they shall be kept wet at all times. If steel forms are used in hot weather, nonsupporting vertical forms shall be broken loose from the concrete soon after the concrete hardens and curing water continually applied in this void. If the forms are removed before the end of the curing period, curing shall be carried out as on unformed surfaces, using suitable materials. Surfaces shall be cured by ponding, by continuous sprinkling, by continuously saturated burlap or cotton mats, or by continuously saturated plastic coated burlap. Burlap and mats shall be clean and free from any contamination and shall be completely saturated before being placed on the concrete. The Contractor shall have an approved work system to ensure that moist curing is continuous 24 hours per day.

3.15.3 Membrane Forming Curing Compounds

Concrete in all areas may be cured with a nonpigmented curing compound containing a fugitive dye in lieu of moist curing. Membrane curing shall not be used on surfaces that are to receive any subsequent treatment depending on adhesion or bonding to the concrete, including surfaces to which a smooth finish is to be applied or other concrete to be bonded. However, a styrene acrylate or chlorinated rubber compound meeting ASTM C 309, Class B requirements, may be used for surfaces which are to be painted or are to receive bituminous roofing or waterproofing, or floors that are to receive adhesive applications of resilient flooring. The curing compound selected shall be compatible with any subsequent paint, roofing, waterproofing or flooring specified. Membrane curing compound shall not be used on surfaces that are maintained at curing temperatures with free steam. Curing compound shall be applied to formed surfaces immediately after the forms are removed and prior to any patching or other surface treatment except the cleaning of loose sand, mortar, and debris from the surface. All surfaces shall be thoroughly moistened with water. Curing compound shall be applied to slab surfaces as soon as the bleeding water has disappeared, with the tops of joints being temporarily sealed to prevent entry of the compound and to prevent moisture loss during the curing period. The curing compound shall be applied in a two-coat

continuous operation by approved motorized power-spraying equipment operating at a minimum pressure of 75 psi, at a uniform coverage of not more than 400 square feet per gallon for each coat, and the second coat shall be applied perpendicular to the first coat. Concrete surfaces which have been subjected to rainfall within 3 hours after curing compound has been applied shall be resprayed by the method and at the coverage specified. Surfaces on which clear compound is used shall be shaded from direct rays of the sun for the first 3 days. Surfaces coated with curing compound shall be kept free of foot and vehicular traffic, and from other sources of abrasion and contamination during the curing period.

3.15.4 Impervious Sheeting

Horizontal concrete surfaces not exposed to view in the completed project may be cured using impervious sheets. However, except for plastic coated burlap, impervious sheeting alone shall not be used for curing. Impervious-sheet curing shall only be used on horizontal or nearly horizontal surfaces. Surfaces shall be thoroughly wetted and be completely covered with the sheeting. Sheeting shall be at least 18 inches wider than the concrete surface to be covered. Covering shall be laid with light-colored side up. Covering shall be lapped not less than 12 inches and securely weighted down or shall be lapped not less than 4 inches and taped to form a continuous cover with completely closed joints. The sheet shall be weighted to prevent displacement so that it remains in contact with the concrete during the specified length of curing. Coverings shall be folded down over exposed edges of slabs and secured by approved means. Sheets shall be immediately repaired or replaced if tears or holes appear during the curing period.

3.15.5 Ponding or Immersion

Concrete shall be continually immersed throughout the curing period. Water shall not be more than 20 degrees F less than the temperature of the concrete.

3.15.6 Cold Weather Curing and Protection

When the daily ambient low temperature is less than 32 degrees F the temperature of the concrete shall be maintained above 40 degrees F for the first seven days after placing. During the period of protection removal, the air temperature adjacent to the concrete surfaces shall be controlled so that concrete near the surface will not be subjected to a temperature differential of more than 25 degrees F as determined by suitable temperature measuring devices furnished by the Contractor, as required, and installed adjacent to the concrete surface and 2 inches inside the surface of the concrete. The installation of the thermometers shall be made by the Contractor as directed.

3.16 SETTING BASE PLATES AND BEARING PLATES

After being properly positioned, column base plates, bearing plates for beams and similar structural members, and machinery and equipment base plates shall be set to the proper line and elevation with nonshrink grout. The thickness of the grout shall be approximately 1/24 the width of the plate, but not less than 3/4 inch. Concrete and metal surfaces in contact with grout shall be clean and free of oil and grease, and concrete surfaces in contact with grout shall be damp and free of laitance when grout is placed.

3.16.1 Omitted

3.16.2 Nonshrink Grout

Nonshrink grout shall be a ready-mixed material requiring only the addition of water. Water content shall be the minimum that will provide a flowable mixture and completely fill the space to be grouted without segregation, bleeding, or reduction of strength.

3.16.2.1 Mixing and Placing of Nonshrink Grout

Mixing and placing shall be in conformance with the material manufacturer's instructions and as specified therein. Ingredients shall be thoroughly dry-mixed before adding water. After adding water, the batch shall be mixed for 3 minutes. Batches shall be of size to allow continuous placement of freshly mixed grout. Grout not used within 30 minutes after mixing shall be discarded. The space between the top of the concrete or machinery-bearing surface and the plate shall be filled solid with the grout. Forms shall be of wood or other equally suitable material for completely retaining the grout on all sides and on top and shall be removed after the grout has set. The placed grout shall be carefully worked by rodding or other means to eliminate voids; however, overworking and breakdown of the initial set shall be avoided. Grout shall not be retempered or subjected to vibration from any source. Where clearances are unusually small, placement shall be under pressure with a grout pump. Temperature of the grout, and of surfaces receiving the grout, shall be maintained at 65 to 85 degrees F until after setting.

3.16.2.2 Treatment of Exposed Surfaces

For metal-oxidizing nonshrink grout, exposed surfaces shall be cut back 1 inch and immediately covered with a parge coat of mortar consisting of 1 part portland cement and 2-1/2 parts fine aggregate by weight, with sufficient water to make a plastic mixture. The parge coat shall have a smooth finish. For other mortars or grouts, exposed surfaces shall have a smooth-dense finish and be left untreated. Curing shall comply with paragraph CURING AND PROTECTION.

3.17 TESTING AND INSPECTION FOR CONTRACTOR QUALITY CONTROL

The Contractor shall perform the inspection and tests described below and, based upon the results of these inspections and tests, shall take the action required and shall submit specified reports. When, in the opinion of the Contracting Officer, the concreting operation is out of control, concrete placement shall cease and the operation shall be corrected. The laboratory performing the tests shall be onsite and shall conform with ASTM C 1077. Materials may be subjected to check testing by the Government from samples obtained at the manufacturer, at transfer points, or at the project site. The Government will inspect the laboratory, equipment, and test procedures prior to start of concreting operations and at least once per quarter thereafter for conformance with ASTM C 1077.

3.17.1 Grading and Corrective Action

3.17.1.1 Fine Aggregate

At least once during each shift when the concrete plant is operating, there shall be one sieve analysis and fineness modulus determination in accordance with ASTM C 136 and COE CRD-C 104 for the fine aggregate or for

each fine aggregate if it is batched in more than one size or classification. The location at which samples are taken may be selected by the Contractor as the most advantageous for control. However, the Contractor is responsible for delivering fine aggregate to the mixer within specification limits. When the amount passing on any sieve is outside the specification limits, the fine aggregate shall be immediately resampled and retested. If there is another failure on any sieve, the fact shall immediately reported to the Contracting Officer, concreting shall be stopped, and immediate steps taken to correct the grading.

3.17.1.2 Coarse Aggregate

At least once during each shift in which the concrete plant is operating, there shall be a sieve analysis in accordance with ASTM C 136 for each size of coarse aggregate. The location at which samples are taken may be selected by the Contractor as the most advantageous for production control. However, the Contractor shall be responsible for delivering the aggregate to the mixer within specification limits. A test record of samples of aggregate taken at the same locations shall show the results of the current test as well as the average results of the five most recent tests including the current test. The Contractor may adopt limits for control coarser than the specification limits for samples taken other than as delivered to the mixer to allow for degradation during handling. When the amount passing any sieve is outside the specification limits, the coarse aggregate shall be immediately resampled and retested. If the second sample fails on any sieve, that fact shall be reported to the Contracting Officer. Where two consecutive averages of 5 tests are outside specification limits, the operation shall be considered out of control and shall be reported to the Contracting Officer. Concreting shall be stopped and immediate steps shall be taken to correct the grading.

3.17.2 Quality of Aggregates

Thirty days prior to the start of concrete placement, the Contractor shall perform all tests for aggregate quality required by ASTM C 33. In addition, after the start of concrete placement, the Contractor shall perform tests for aggregate quality at least every three months, and when the source of aggregate or aggregate quality changes. Samples tested after the start of concrete placement shall be taken immediately prior to entering the concrete mixer.

3.17.3 Scales, Batching and Recording

The accuracy of the scales shall be checked by test weights prior to start of concrete operations and at least once every three months. Such tests shall also be made as directed whenever there are variations in properties of the fresh concrete that could result from batching errors. Once a week the accuracy of each batching and recording device shall be checked during a weighing operation by noting and recording the required weight, recorded weight, and the actual weight batched. At the same time, the Contractor shall test and ensure that the devices for dispensing admixtures are operating properly and accurately. When either the weighing accuracy or batching accuracy does not comply with specification requirements, the plant shall not be operated until necessary adjustments or repairs have been made. Discrepancies in recording accuracies shall be corrected immediately.

3.17.4 Batch-Plant Control

The measurement of concrete materials including cementitious materials, each size of aggregate, water, and admixtures shall be continuously controlled. The aggregate weights and amount of added water shall be adjusted as necessary to compensate for free moisture in the aggregates. The amount of air-entraining agent shall be adjusted to control air content within specified limits. A report shall be prepared indicating type and source of cement used, type and source of pozzolan or slag used, amount and source of admixtures used, aggregate source, the required aggregate and water weights per cubic yard, amount of water as free moisture in each size of aggregate, and the batch aggregate and water weights per cubic yard for each class of concrete batched during each day's plant operation.

3.17.5 Concrete Mixture

a. Air Content Testing. Air content tests shall be made when test specimens are fabricated. In addition, at least two tests for air content shall be made on randomly selected batches of each separate concrete mixture produced during each 8-hour period of concrete production. Additional tests shall be made when excessive variation in workability is reported by the placing foreman or Government inspector. Test results shall be plotted on control charts which shall at all times be readily available to the Government and shall be submitted weekly. Copies of the current control charts shall be kept in the field by testing crews and results plotted as tests are made. When a single test result reaches either the upper or lower action limit, a second test shall immediately be made. The results of the two tests shall be averaged and this average used as the air content of the batch to plot on both the air content and the control chart for range, and for determining need for any remedial action. The result of each test, or average as noted in the previous sentence, shall be plotted on a separate control chart for each mixture on which an "average line" is set at the midpoint of the specified air content range from paragraph Air Entrainment. An upper warning limit and a lower warning limit line shall be set 1.0 percentage point above and below the average line, respectively. An upper action limit and a lower action limit line shall be set 1.5 percentage points above and below the average line, respectively. The range between each two consecutive tests shall be plotted on a secondary control chart for range where an upper warning limit is set at 2.0 percentage points and an upper action limit is set at 3.0 percentage points. Samples for air content may be taken at the mixer, however, the Contractor is responsible for delivering the concrete to the placement site at the stipulated air content. If the Contractor's materials or transportation methods cause air content loss between the mixer and the placement, correlation samples shall be taken at the placement site as required by the Contracting Officer, and the air content at the mixer controlled as directed.

b. Air Content Corrective Action. Whenever points on the control chart for percent air reach either warning limit, an adjustment shall immediately be made in the amount of air-entraining admixture batched. As soon as practical after each adjustment, another test shall be made to verify the result of the adjustment. Whenever a point on the secondary control chart for range reaches the warning limit, the admixture dispenser shall be recalibrated

to ensure that it is operating accurately and with good reproducibility. Whenever a point on either control chart reaches an action limit line, the air content shall be considered out of control and the concreting operation shall immediately be halted until the air content is under control. Additional air content tests shall be made when concreting is restarted.

c. Slump Testing. In addition to slump tests which shall be made when test specimens are fabricated, at least four slump tests shall be made on randomly selected batches in accordance with ASTM C 143/C 143M for each separate concrete mixture produced during each 8-hour or less period of concrete production each day. Also, additional tests shall be made when excessive variation in workability is reported by the placing foreman or Government inspector. Test results shall be plotted on control charts which shall at all times be readily available to the Government and shall be submitted weekly. Copies of the current control charts shall be kept in the field by testing crews and results plotted as tests are made. When a single slump test reaches or goes beyond either the upper or lower action limit, a second test shall immediately be made. The results of the two tests shall be averaged and this average used as the slump of the batch to plot on both the control charts for slump and the chart for range, and for determining need for any remedial action. Limits shall be set on separate control charts for slump for each type of mixture. The upper warning limit shall be set at 1/2 inch below the maximum allowable slump specified in paragraph Slump in PART 1 for each type of concrete and an upper action limit line and lower action limit line shall be set at the maximum and minimum allowable slumps, respectively, as specified in the same paragraph. The range between each consecutive slump test for each type of mixture shall be plotted on a single control chart for range on which an upper action limit is set at 2 inches. Samples for slump shall be taken at the mixer. However, the Contractor is responsible for delivering the concrete to the placement site at the stipulated slump. If the Contractor's materials or transportation methods cause slump loss between the mixer and the placement, correlation samples shall be taken at the placement site as required by the Contracting Officer, and the slump at the mixer controlled as directed.

d. Slump Corrective Action. Whenever points on the control charts for slump reach the upper warning limit, an adjustment shall immediately be made in the batch weights of water and fine aggregate. The adjustments are to be made so that the total water content does not exceed that amount allowed by the maximum w/c ratio specified, based on aggregates which are in a saturated surface dry condition. When a single slump reaches the upper or lower action limit, no further concrete shall be delivered to the placing site until proper adjustments have been made. Immediately after each adjustment, another test shall be made to verify the correctness of the adjustment. Whenever two consecutive individual slump tests, made during a period when there was no adjustment of batch weights, produce a point on the control chart for range at or above the upper action limit, the concreting operation shall immediately be halted, and the Contractor shall take appropriate steps to bring the slump under control. Additional slump tests shall be made as directed.

e. Temperature. The temperature of the concrete shall be measured when compressive strength specimens are fabricated. Measurement shall be in accordance with ASTM C 1064/C 1064M. The temperature shall be reported along with the compressive strength data.

f. Strength Specimens. At least one set of test specimens shall be made, for compressive or flexural strength as appropriate, on each different concrete mixture placed during the day for each 500 cubic yards or portion thereof of that concrete mixture placed each day. Additional sets of test specimens shall be made, as directed by the Contracting Officer, when the mixture proportions are changed or when low strengths have been detected. A truly random (not haphazard) sampling plan shall be developed by the Contractor and approved by the Contracting Officer prior to the start of construction. The plan shall assure that sampling is done in a completely random and unbiased manner. A set of test specimens for concrete with a 28-day specified strength per paragraph Strength Requirements in PART 1 shall consist of four specimens, two to be tested at 7 days and two at 28 days. A set of test specimens for concrete with a 90-day strength per the same paragraph shall consist of six specimens, two tested at 7 days, two at 28 days, and two at 90 days. Test specimens shall be molded and cured in accordance with ASTM C 31/C 31M and tested in accordance with ASTM C 39/C 39M for test cylinders and ASTM C 78 for test beams. Results of all strength tests shall be reported immediately to the Contracting Officer. Quality control charts shall be kept for individual strength "tests", ("test" as defined in paragraph Strength Requirements in PART 1) moving average of last 3 "tests" for strength, and moving average for range for the last 3 "tests" for each mixture. The charts shall be similar to those found in ACI 214.3R.

3.17.6 Inspection Before Placing

Foundations, construction joints, forms, and embedded items shall be inspected by the Contractor in sufficient time prior to each concrete placement in order to certify to the Contracting Officer that they are ready to receive concrete. The results of each inspection shall be reported in writing.

3.17.7 Placing

The placing foreman shall supervise placing operations, shall determine that the correct quality of concrete or grout is placed in each location as specified and as directed by the Contracting Officer, and shall be responsible for measuring and recording concrete temperatures and ambient temperature hourly during placing operations, weather conditions, time of placement, volume placed, and method of placement. The placing foreman shall not permit batching and placing to begin until it has been verified that an adequate number of vibrators in working order and with competent operators are available. Placing shall not be continued if any pile of concrete is inadequately consolidated. If any batch of concrete fails to meet the temperature requirements, immediate steps shall be taken to improve temperature controls.

3.17.8 Vibrators

The frequency and amplitude of each vibrator shall be determined in accordance with COE CRD-C 521 prior to initial use and at least once a

month when concrete is being placed. Additional tests shall be made as directed when a vibrator does not appear to be adequately consolidating the concrete. The frequency shall be determined while the vibrator is operating in concrete with the tachometer being held against the upper end of the vibrator head while almost submerged and just before the vibrator is withdrawn from the concrete. The amplitude shall be determined with the head vibrating in air. Two measurements shall be taken, one near the tip and another near the upper end of the vibrator head, and these results averaged. The make, model, type, and size of the vibrator and frequency and amplitude results shall be reported in writing. Any vibrator not meeting the requirements of paragraph Consolidation, shall be immediately removed from service and repaired or replaced.

3.17.9 Curing Inspection

a. Moist Curing Inspections. At least once each shift, and not less than twice per day on both work and non-work days, an inspection shall be made of all areas subject to moist curing. The surface moisture condition shall be noted and recorded.

b. Moist Curing Corrective Action. When a daily inspection report lists an area of inadequate curing, immediate corrective action shall be taken, and the required curing period for those areas shall be extended by 1 day.

c. Membrane Curing Inspection. No curing compound shall be applied until the Contractor has verified that the compound is properly mixed and ready for spraying. At the end of each operation, the Contractor shall estimate the quantity of compound used by measurement of the container and the area of concrete surface covered, shall compute the rate of coverage in square feet per gallon, and shall note whether or not coverage is uniform.

d. Membrane Curing Corrective Action. When the coverage rate of the curing compound is less than that specified or when the coverage is not uniform, the entire surface shall be sprayed again.

e. Sheet Curing Inspection. At least once each shift and once per day on non-work days, an inspection shall be made of all areas being cured using impervious sheets. The condition of the covering and the tightness of the laps and tapes shall be noted and recorded.

f. Sheet Curing Corrective Action. When a daily inspection report lists any tears, holes, or laps or joints that are not completely closed, the tears and holes shall promptly be repaired or the sheets replaced, the joints closed, and the required curing period for those areas shall be extended by 1 day.

3.17.10 Cold-Weather Protection

At least once each shift and once per day on non-work days, an inspection shall be made of all areas subject to cold-weather protection. Any deficiencies shall be noted, corrected, and reported.

3.17.11 Mixer Uniformity

a. Truck Mixers. Prior to the start of concrete placing and at least once every 6 months when concrete is being placed, uniformity of

concrete mixing shall be determined in accordance with ASTM C 94/C 94M. The truck mixers shall be selected randomly for testing. When satisfactory performance is found in one truck mixer, the performance of mixers of substantially the same design and condition of the blades may be regarded as satisfactory.

b. Mixer Uniformity Corrective Action. When a mixer fails to meet mixer uniformity requirements, either the mixing time shall be increased, batching sequence changed, batch size reduced, or adjustments shall be made to the mixer until compliance is achieved.

3.17.12 Reports

All results of tests or inspections conducted shall be reported informally as they are completed and in writing daily. A weekly report shall be prepared for the updating of control charts covering the entire period from the start of the construction season through the current week. During periods of cold-weather protection, reports of pertinent temperatures shall be made daily. These requirements do not relieve the Contractor of the obligation to report certain failures immediately as required in preceding paragraphs. Such reports of failures and the action taken shall be confirmed in writing in the routine reports. The Contracting Officer has the right to examine all contractor quality control records.

-- End of Section --

SECTION TABLE OF CONTENTS

DIVISION 03 - CONCRETE

SECTION 03415

PRECAST-AUTOCLAVED AERATED CONCRETE

05/03

PART 1 GENERAL

1.1 REFERENCES
1.2 SUBMITTALS
1.3 QUALIFICATIONS AND RESPONSIBILITIES
1.3.1 AAC Manufacturer's Quality Assurance Engineer
1.4 REQUIREMENTS AND PERFORMANCE
1.4.1 Design Requirements
1.4.1.1 Precast Members and Connections
1.4.1.2 Loads
1.4.1.3 Confirmation of Design
1.4.2 Performance Requirements
1.4.2.1 Strength;
1.5 QUALITY ASSURANCE
1.6 PROJECT SITE MOCK-UP
1.7 DELIVERY, STORAGE, AND HANDLING

PART 2 PRODUCTS

2.1 MANUFACTURERS
2.2 PRECAST AUTOCLAVED AERATED PANELS
2.2.1 Composition
2.3 CONCRETE
2.4 MORTAR
2.4.1 Leveling Bed Mortar
2.4.2 Repair/Patch Mortar
2.5 GROUT
2.6 SURFACE FINISHES

PART 3 EXECUTION

3.1 PREPARATION
3.2 INSTALLATION
3.2.1 Erection
3.2.2 Architectural Finishes
3.2.3 Openings and Recesses
3.2.4 Lintels and Beams
3.2.5 Control Joints
3.3 Flashing
3.4 WALL PANEL JOINTS
3.4.1 Loadbearing Application:
3.4.2 Non- loadbearing Application:
3.5 INSTALLATION TOLERANCES
3.6 REPAIR

-- End of Section Table of Contents --

CEGS-03415 (January 1996)
AE MOD (May 2003)

SECTION 03415

PRECAST-AUTOCLAVED AERATED CONCRETE
05/03

PART 1 GENERAL

1.1 REFERENCES

The publications listed below form a part of this specification to the extent referenced. The publications are referred to in the text by basic designation only.

ACI INTERNATIONAL (ACI)

ACI 318/318R	(1995) Building Code Requirements for Structural Concrete and Commentary
ACI 523.2R	(1996) Guide for Precast Cellular Concrete Floor, Roof and Wall Units
ACI 523.5	(1996) Recommended Practices for AAC

AMERICAN SOCIETY FOR TESTING AND MATERIALS (ASTM)

ASTM C 1386	(1998) Precast Autoclaved Aerated Concrete Wall Units
ASTM C 1452	(2000) Reinforced Autoclaved Aerated Concrete Elements

1.2 SUBMITTALS

Government approval is required for submittals with a "G" designation; submittals not having a "G" designation are for information only. When used, a designation following the "G" designation identifies the office that will review the submittal for the Government. The following shall be submitted in accordance with Section 01330 SUBMITTAL PROCEDURES:

SD-02 Shop Drawings

Fabrication Drawings; G,AE

Prepare and submit for approval complete shop drawings that show the precast panel manufacturer's recommended details and materials for the work required by paragraphs DELIVERY, STORAGE, AND HANDLING and ERECTION. The shop drawings shall include: marking of the units for the placing drawings; anchorages and embedded items for work of other trades; openings and recesses required by other trades; anchorages to support construction; joints between units and other construction; reinforcing steel details; method of curing; and, pickup points and lifting devices.

Erection Plan; G,AE

Prepare and submit a plan for erection of the AAC structural frame. Describe the sequence of erection, including connections and anchorages, and the means for maintaining stability of the framing elements and the frame as a whole. Show openings, recesses, cast in place concrete members, headers, lintels and non-structural elements. Show all connections, including bolts, dowels, welded studs, deformed bar anchors, mechanical and chemical fasteners, and field welds required for a complete installation.

SD-03 Product Data

Confirmation of Design; G,AE

Design calculations for confirmation of design shall be submitted prior to the initiation of manufacture of members to be used under this contract. Calculations shall be based on criteria given in the General Structural Notes, Wind Pressure Diagram and Wall Schedule.

Construction Records;

Construction records of the manufacturing, handling, and erection of the precast autoclaved aerated concrete members shall be submitted. Include all modifications to the members made during erection of the frame and completion of construction.

SD-04 Samples

Precast Panel

One sample panel for each concrete finish specified shall be submitted for approval.

Site Mock-up.

Construct a full-size mock-up of the PAAC elements of a typical guest unit comprised of two demising walls, front wall, non-loadbearing interior wall, and floor/ceiling panel. Mock-up shall be located where directed by the Contracting Officer, and shall serve to demonstrate and establish quality of workmanship for fabrication, erection and field modification of the PAAC Panels shall include all openings, grooves and recesses for building services. Connections shall be made in the same manner as proposed for the finish work. After examination and approval by the Contracting Officer and the manufacturer's Quality Assurance Engineer, the mock-up shall be removed or, if undamaged, may be incorporated in the work.

Additional Submittal Requirements

Fabrication Drawings, Erection Plan, and Design Calculations shall be submitted simultaneously, and shall be Signed and Sealed by the AAC Manufacturer's Quality Assurance Engineer.

1.3 QUALIFICATIONS AND RESPONSIBILITIES

1.3.1 AAC Manufacturer's Quality Assurance Engineer

Qualifications - Professional Engineer. Experience in AAC design and erection.

Responsibilities - Familiar with Contract Documents. Prepare or be in responsible charge of the preparation of submittals including Fabrication Drawings, Erection Plan, Design Calculations and Construction Records. Sign and Seal all such submittals. Direct the erection of the AAC framing system. Supervise the field modifications necessary for installation of building systems, including openings and recesses, to maintain the structural integrity of the completed structural frame. Be present full-time on site for the duration of erection and installation of AAC members and for all subsequent modifications and repairs thereto.

1.4 REQUIREMENTS AND PERFORMANCE

1.4.1 Design Requirements

Perform a complete and comprehensive design of the Precast Autoclaved Aerated Concrete Framing System, including structural and non-structural AAC components. Design and detail all members and connections consistent with the drawings. Coordinate provisions required for attachment of cladding, collateral materials and finishes. Coordinate with the drawings and other trades to determine size and location of all openings and recesses required for architectural features or for installation of building systems, and provide for such openings and recesses in the design of the AAC framing members. Design lintels and headers for wall and slab openings whether shown or otherwise required.

1.4.1.1 Precast Members and Connections

Design of members and connections shall be in accordance with ASTM C 1386 and ASTM C 1452.

1.4.1.2 Loads

Loads for members and connections shall include all dead load, live load,imposed floor loads, applicable lateral loads such as wind and earthquake loads, applicable construction loads such as handling, erection loads, and other applicable loads.

1.4.1.3 Confirmation of Design

The drawings indicate a design based on gravity, wind and earthquake load criteria given in the General Structural Notes. The design is based on assumptions relating to the size and density of the AAC framing members and associated cast in place concrete members, and therefore requires certain confirmation. Parallel to and in conjunction with the design of precast AAC framing system, perform a comprehensive check of all headers, lintels, columns footings and other collateral structural elements and submit calculations as documentation for review. Revise design of structural elements shown on drawings that are found to be inconsistent with the calculations. Clearly indicate on Fabrication Drawings or Erection Plan all revisions made to footings, lintels, headers, columns and other structural elements resulting from the completed calculations.

1.4.2 Performance Requirements

1.4.2.1 Strength;

Allow for following based on ultimate strength theory similar to those of ACI 523.2R and ACI 318/318R Section 10.21:

Floor Panel System: Flexure and diaphragm loads

Wall Panel System: Flexure, flexure with axial loads, and axial loads only.

Shear Wall Panel System: In addition to flexural and axial loads, in-plane shear and flexural loads resulting from wind or earthquake action.

1.5 QUALITY ASSURANCE

Comply with National Evaluation Service, Inc. (NES), National Evaluation Report NER-531. Wall and floor panel design by professional engineer registered in state where project is located.

1.6 PROJECT SITE MOCK-UP

Erect sample construction with wall panels and floor panels. Indicate the following:

a. Bonding and reinforcement including head and bed joints

b. Control joint with joint sealant installed

c. Workmanship

d. Reinforcement

e. Flexible flashing

f. Surface finish including patching of chips and corners

1.7 DELIVERY, STORAGE, AND HANDLING

Limit delivery to amount of material that can be readily installed. Unload pallets using pallet forks (either forklift or pallet fork on a crane cable).

Store material away from other construction activities on a flat graded area that is not susceptible to standing water erosion or settling. Keep material covered in adverse weather conditions until ready for installation.

PART 2 PRODUCTS

2.1 MANUFACTURERS

Subject to compliance with the requirements of this specification, manufacturers offering products that may be incorporated in the Project include, but are not limited to, the following:

ACCOA
3351 West Orange Blossom Trail
Apopka, FL 32712

(407) 884-0051

Babb International, Inc.
2400 Hebal Boulevard
P.O. Box 834
Adel, GA 31620
(770) 308-1500

AERCON Florida LLC
Haines City, Florida 32712
(863)-422-6360
aerconfl.com

2.2 PRECAST AUTOCLAVED AERATED PANELS

2.2.1 Composition

Proprietary mixture consisting of sand, lime, cement, water, and expansion agent.

Nominal dimensions as indicated.

2.3 CONCRETE

Cast in place members in accordance with Section 03300 CAST IN PLACE STRUCTURAL CONCRETE.

2.4 MORTAR

2.4.1 Leveling Bed Mortar

ASTM C 270, Type M. One part portland cement or blended cement, 3 parts sand. Average compressive strength of 1800 psi.

2.4.2 Repair/Patch Mortar

Repair/patch mortar shall be as recommended,by panel manufacturer.

2.5 GROUT

Grout for joint keys and vertical reinforcing ducts shall conform to ASTM C 476.

2.6 SURFACE FINISHES

Smooth, suitable for application of plaster or other troweled finishes.

PART 3 EXECUTION

3.1 PREPARATION

Keep walls and floors dry during erection by covering at end of each work period with nonstaining waterproof membrane covering. Protect partially completed walls and floors with nonstaining waterproof membrane until wall and floor construction activities are completed. Brace walls during construction to protect from damage. Cutting of openings or recesses in floor or wall panels is not permitted except as indicated on approved Fabrication Drawings or under Paragraph OPENINGS AND RECESSES.

3.2 INSTALLATION

Comply with ACI 523.5 and manufacturer's written specifications for installation floor and wall panels. Use manufacturer's recommended installation equipment to avoid damage to panels.

3.2.1 Erection

Erect panel systems as shown on drawings and approved Fabrication Drawings and Erection Plan. Leave openings as required for installation of other construction work in wall and floor panel systems. Complete erection of panel systems after other construction work is installed. Erect panel systems with accurate spacing of panels with uniform joint widths, and openings, joints, returns, and offsets accurately located. Comply with specified construction tolerances with courses spaced and coordinated with other construction.

3.2.2 Architectural Finishes

Provide for attachment of architectural finishes indicated. Provide for anchorage of brick veneer, brick shelf angles and similar non-structural elements requiring attachment to the building frame.

3.2.3 Openings and Recesses

Provide for distribution of building services including domestic water, storm and sanitary drainage, air handling and exhaust, electrical power distribution and fixtures. Indicate openings and recesses on shop drawings submitted for approval. Openings and recesses made during or after erection shall be approved by the AAC manufacturer's Quality Assurance Engineer. Passage for piping and conduits shall be accomplished by core drilling holes no larger in diameter than 1 inch greater than the diameter of the object passing through.

3.2.4 Lintels and Beams

Provide lintels and headers at wall and slab openings where indicated or where shown on approved Erection Plan. Provide panel manufacturer's AAC or precast lintel and bond-beam type units, reinforce as indicated and fill with grout. Install structural steel headers and lintels with indicated bearing support. Form and place reinforced concrete framing members.

3.2.5 Control Joints

Comply with panel manufacturer's specifications for control joint requirements. Provide control joints 4/2 inch wide unless indicated otherwise.Rake out control joints to a depth of 3/4 inch while mortar is still plastic. Leave joint open and clean for joint treatment as specified in Section 07900A JOINT SEALING. Fill joints with sealant as indicated on drawings.

3.3 Flashing

Install panels to receive flashing with smooth joints without projection that could puncture flashing materials. Provide mortar on both sides of flashing in joints..

3.4 WALL PANEL JOINTS

3.4.1 Loadbearing Application:

Install full head and bed joints with manufacturer's recommended mortar. Remove excess extruded mortar. Tool joints as recommended by panel manufacturer.

3.4.2 Non- loadbearing Application:

Install acrylic joint filler as indicated on drawings.

3.5 INSTALLATION TOLERANCES

Maximum Variation from Plumb: 1/4 inch in 10 feet, not exceeding 3/8 inch in 20 feet.

Maximum Variation from Level: 1/4 inch in 20 feet, not exceeding 1/2 inch in 40 feet.

Maximum Variation in Linear Building Line from Location Indicated: 1/4 inch in 20 feet.

3.6 REPAIR

Repair panels in accordance with panel manufacturer's instructions and recommendations to suit Project requirements. AAC Manufacturer's Quality Assurance Engineer shall propose methods and materials to be used for all repairs and submit to the Contracting Officer for approval.

-- End of Section --

SECTION TABLE OF CONTENTS

DIVISION 04 - MASONRY

SECTION 04200

MASONRY

08/02

PART 1 GENERAL

1.1 REFERENCES
1.2 SUBMITTALS
1.3 OMITTED
1.4 DELIVERY, HANDLING, AND STORAGE
1.4.1 Masonry Units
1.4.2 Reinforcement, Anchors, and Ties
1.4.3 Cementitious Materials, Sand and Aggregates
1.5 OMITTED
1.5.1 Omitted
1.5.2 Unit Strength Method
1.6 QUALITY ASSURANCE
1.6.1 Appearance
1.6.2 Testing
1.6.3 Spare Vibrator
1.6.4 Bracing and Scaffolding

PART 2 PRODUCTS

2.1 GENERAL REQUIREMENTS
2.2 CLAY OR SHALE BRICK
2.2.1 Solid Clay or Shale Brick
2.3 CONCRETE BRICK
2.4 CONCRETE MASONRY UNITS (CMU)
2.4.1 Aggregates
2.4.2 Kinds and Shapes
2.5 PRECAST CONCRETE ITEMS
2.5.1 Lintels
2.5.2 Column Caps
2.5.3 Splash Blocks
2.6 OMITTED
2.7 OMITTED
2.8 MASONRY MORTAR
2.8.1 Admixtures for Masonry Mortar
2.8.2 Colored Mortar
2.8.3 Hydrated Lime and Alternates
2.8.4 Cement
2.8.5 Pre-Mixed Mortar
2.8.6 Sand and Water
2.9 OMITTED
2.10 GROUT AND READY-MIXED GROUT
2.10.1 Admixtures for Grout
2.10.2 Grout Barriers
2.11 ANCHORS, TIES, AND BAR POSITIONERS
2.11.1 Omitted
2.11.2 Wall Ties
2.11.3 Dovetail Anchors

2.11.4 Veneer Anchors
2.11.5 Veneer Anchor Fasteners
2.11.6 Bar Positioners
2.12 JOINT REINFORCEMENT
2.13 REINFORCING STEEL BARS AND RODS
2.14 OMITTED
2.15 OMITTED
2.16 EXPANSION-JOINT MATERIALS
2.17 FLASHING
2.18 WEEP HOLE VENTILATORS
2.19 CAVITY DRAINAGE MATERIAL (MORTAR GUARD)

PART 3 EXECUTION

3.1 PREPARATION
3.1.1 Hot Weather Installation
3.1.2 Cold Weather Installation
3.1.2.1 Protection
3.1.2.2 Completed Masonry and Masonry Not Being Worked On
3.1.3 Stains
3.1.4 Loads
3.1.5 Surfaces
3.2 LAYING MASONRY UNITS
3.2.1 Forms and Shores
3.2.2 Reinforced Concrete Masonry Units Walls
3.2.3 Concrete Masonry Units
3.2.4 Clay or Shale Brick Units
3.2.4.1 Wetting of Units
3.2.4.2 Solid Units
3.2.4.3 Omitted
3.2.4.4 Brick-Faced Walls
3.2.4.5 Omitted
3.2.4.6 Reinforced Brick Walls
3.2.4.7 Omitted
3.2.4.8 Brick Veneer
3.2.5 Tolerances
3.2.6 Cutting and Fitting
3.2.7 Jointing
3.2.7.1 Flush Joints
3.2.7.2 Tooled Joints
3.2.7.3 Door and Window Frame Joints
3.2.8 Joint Widths
3.2.8.1 Concrete Masonry Units
3.2.8.2 Omitted
3.2.8.3 Brick
3.2.9 Embedded Items
3.2.10 Unfinished Work
3.2.11 Masonry Wall Intersections
3.3 OMITTED
3.4 WEEP HOLES
3.5 COMPOSITE WALLS
3.6 MORTAR
3.7 REINFORCING STEEL
3.7.1 Positioning Bars
3.7.2 Splices
3.8 JOINT REINFORCEMENT INSTALLATION
3.9 PLACING GROUT
3.9.1 Vertical Grout Barriers for Fully Grouted Walls
3.9.2 Horizontal Grout Barriers

3.9.3 Grout Holes and Cleanouts
3.9.3.1 Grout Holes
3.9.3.2 Cleanouts for Hollow Unit Masonry Construction
3.9.3.3 Cleanouts for Solid Unit Masonry Construction
3.9.4 Grouting Equipment
3.9.4.1 Grout Pumps
3.9.4.2 Vibrators
3.9.5 Grout Placement
3.9.5.1 Low-Lift Method
3.10 BOND BEAMS
3.11 OMITTED
3.12 BRICK EXPANSION JOINTS
3.13 SHELF ANGLES
3.14 LINTELS
3.14.1 Masonry Lintels
3.14.2 Precast Concrete and Steel Lintels
3.15 COPINGS AND CAPS
3.16 ANCHORAGE TO CONCRETE
3.16.1 Anchorage to Concrete
3.17 OMITTED
3.18 OMITTED
3.19 SPLASH BLOCKS
3.20 POINTING AND CLEANING
3.20.1 Concrete Masonry Unit and Concrete Brick Surfaces
3.20.2 Clay or Shale Brick Surfaces
3.21 OMITTED
3.22 PROTECTION
3.23 TEST REPORTS
3.23.1 Field Testing of Mortar
3.23.2 Field Testing of Grout
3.23.3 Efflorescence Test

-- End of Section Table of Contents --

UFGS-04200 (August 2002)

SECTION 04200

MASONRY
08/02

PART 1 GENERAL

1.1 REFERENCES

The publications listed below form a part of this specification to the extent referenced. The publications are referred to within the text by basic designation only.

ACI INTERNATIONAL (ACI)

ACI 530.1	(1999) Specifications for Masonry Structures and Related Commentaries
ACI 318/318M	(2002) Building Code Requirements for Structural Concrete and Commentary
ACI SP-66	(1994) ACI Detailing Manual

AMERICAN SOCIETY FOR TESTING AND MATERIALS (ASTM)

ASTM A 82	(2001) Steel Wire, Plain, for Concrete Reinforcement
ASTM A 153/A 153M	(2001a) Zinc Coating (Hot-Dip) on Iron and Steel Hardware
ASTM A 167	1999) Stainless and Heat-Resisting Chromium-Nickel Steel Plate, Sheet, and Strip
ASTM A 615/A 615M	(2001b) Deformed and Plain Billet-Steel Bars for Concrete Reinforcement
ASTM A 616/A 616M	(1996a) Rail Steel Deformed and Plain Bars for Concrete Reinforcement
ASTM B 370	(1998) Copper Sheet and Strip for Building Construction
ASTM C 55	(2001a) Concrete Brick
ASTM C 62	(2001) Building Brick (Solid Masonry Units Made from Clay or Shale)
ASTM C 67	(2002) Sampling and Testing Brick and Structural Clay Tile
ASTM C 90	(2002) Loadbearing Concrete Masonry Units
ASTM C 91	(2001) Masonry Cement

ASTM C 94/C 94M	(2000e2) Ready-Mixed Concrete
ASTM C 129	(2001) Nonloadbearing Concrete Masonry Units
ASTM C 144	(1999) Aggregate for Masonry Mortar
ASTM C 150	(2002) Portland Cement
ASTM C 207	(1991; R 1997) Hydrated Lime for Masonry Purposes
ASTM C 216	(2001a) Facing Brick (Solid Masonry Units Made from Clay or Shale)
ASTM C 270	(2001a) Mortar for Unit Masonry
ASTM C 476	(2001) Grout for Masonry
ASTM C 494/C 494M	(1999ae1) Chemical Admixtures for Concrete
ASTM C 641	(1998e1) Staining Materials in Lightweight Concrete Aggregates
ASTM C 780	(2000) Preconstruction and Construction Evaluation of Mortars for Plain and Reinforced Unit Masonry
ASTM C 1019	(2000b) Sampling and Testing Grout
ASTM C 1072	(2000a) Measurement of Masonry Flexural Bond Strength
ASTM C 1142	(1995; R 2001) Extended Life Mortar for Unit Masonry
ASTM E 447	(1997) Compressive Strength of Masonry Prisms

1.2 SUBMITTALS

Government approval is required for submittals with a "G" designation; submittals not having a "G" designation are for information only or as otherwise designated. When used, a designation following the "G" designation identifies the office that will review the submittal for the Government. The following shall be submitted in accordance with Section 01330 SUBMITTAL PROCEDURES:

SD-02 Shop Drawings

Masonry Work

Drawings including plans, elevations, and details of wall reinforcement; details of reinforcing bars at corners and wall intersections; offsets; tops, bottoms, and ends of walls; control and expansion joints; lintels; and wall openings. Bar splice locations shall be shown. Bent bars shall be identified on a

bending diagram and shall be referenced and located on the drawings. Wall dimensions, bar clearances, and wall openings greater than one masonry unit in area shall be shown. No approval will be given to the shop drawings until the Contractor certifies that all openings, including those for mechanical and electrical service, are shown. If, during construction, additional masonry openings are required, the approved shop drawings shall be resubmitted with the additional openings shown along with the proposed changes. Location of these additional openings shall be clearly highlighted. The minimum scale for wall elevations shall be 1/4 inch per foot. Reinforcement bending details shall conform to the requirements of ACI SP-66.

SD-03 Product Data

Clay or Shale Brick
Flashing

Manufacturer's descriptive data.

Cold Weather Installation

Cold weather construction procedures.

SD-04 Samples

Clay or Shale Brick; G, ED

Color samples of three stretcher units and one unit for each type of special shape. Units shall show the full range of color and texture. Submit sample of colored mortar with applicable masonry unit.

Portable Panel; G, RE

One panel of clay or shale brick, 2 by 2 feet, containing approximately 24 brick facings to establish range of color and texture.

SD-06 Test Reports

Efflorescence Test
Field Testing of Mortar
Field Testing of Grout

Test reports from an approved independent laboratory. Test reports on a previously tested material shall be certified as the same as that proposed for use in this project.

SD-07 Certificates

Clay or Shale Brick
Concrete Masonry Units (CMU)
Anchors, Ties, and Bar Positioners
Expansion-Joint Materials
Joint Reinforcement
Reinforcing Steel Bars and Rods
Masonry Cement

Mortar Coloring
Precast Concrete Items
Admixtures for Masonry Mortar
Admixtures for Grout

Certificates of compliance stating that the materials meet the specified requirements.

SD-08 Manufacturer's Instructions

Masonry Cement
When masonry cement is used, submit the manufacturer's printed instructions on proportions of water and aggregates and on mixing to obtain the type of mortar required.

1.3 OMITTED

1.4 DELIVERY, HANDLING, AND STORAGE

Materials shall be delivered, handled, stored, and protected to avoid chipping, breakage, and contact with soil or contaminating material.

1.4.1 Masonry Units

Concrete masonry units shall be covered or protected from inclement weather. Store Type II, concrete masonry units at the site for a minimum of 28 days for air cured units, 10 days for atmospheric steam or water cured units, and 3 days for units cured with steam at a pressure of 120 to 150 psi and at a temperature of 350 to 365 degrees F for at least 5 hours. Protect moisture controlled units (Type I) from rain and ground water. Prefabricated lintels shall be marked on top sides to show either the lintel schedule number or the number and size of top and bottom bars.

1.4.2 Reinforcement, Anchors, and Ties

Steel reinforcing bars, coated anchors, ties, and joint reinforcement shall be stored above the ground. Steel reinforcing bars and uncoated ties shall be free of loose mill scale and rust.

1.4.3 Cementitious Materials, Sand and Aggregates

Cementitious and other packaged materials shall be delivered in unopened containers, plainly marked and labeled with manufacturers' names and brands. Cementitious material shall be stored in dry, weathertight enclosures or be completely covered. Cement shall be handled in a manner that will prevent the inclusion of foreign materials and damage by water or dampness. Sand and aggregates shall be stored in a manner to prevent contamination or segregation.

1.5 OMITTED

1.5.1 Omitted

1.5.2 Unit Strength Method

Compute compressive strength of masonry system "Unit Strength Method," ACI 530.1. Submit calculations and certifications of unit and mortar strength.

1.6 QUALITY ASSURANCE

1.6.1 Appearance

Bricks shall be manufactured at one time and from the same batch. Blend all brick to produce a uniform appearance when installed. An observable "banding" or "layering" of colors or textures caused by improperly mixed brick is unacceptable.

1.6.2 Testing

Masonry strength shall be determined in accordance with ACI 530.1; submit test reports on three prisms in accordance with ASTM E 447, Method B modified as specified in ACI 530.1. The cost of testing shall be paid by the Contractor.

1.6.3 Spare Vibrator

Maintain at least one spare vibrator on site at all times.

1.6.4 Bracing and Scaffolding

Provide bracing and scaffolding necessary for masonry work. Design bracing to resist wind pressure as required by local code.

PART 2 PRODUCTS

2.1 GENERAL REQUIREMENTS

The source of materials which will affect the appearance of the finished work shall not be changed after the work has started except with Contracting Officer's approval.

2.2 CLAY OR SHALE BRICK

Color range and texture of clay or shale brick shall be as indicated and shall conform to the approved sample. Brick shall conform to ASTM C 62; Grade SW shall be used for brick in contact with earth or grade and for all exterior work and for all nonvertical surfaces. Grade SW or MW shall be used in other brickwork. Average dimensions of brick shall be 3-5/8 inches thick, 2-1/4 inches high, and 8 inches long (standard) or 4 inches thick, 2-2/3 inches high, and 8 inches long (nominal), subject to the tolerances specified in ASTM C 62. Brick shall be tested for efflorescence. Clay or shale brick units shall be delivered factory-blended to provide a uniform appearance and color range in the completed wall.

2.2.1 Solid Clay or Shale Brick

Solid clay or shale brick shall conform to ASTM C 216, Type FBS. Brick size shall be modular and the nominal size of the brick used shall be 3-5/8 inches thick, 2-1/4 inches high, and 8 inches long (nominal) or 4 inches thick, 2-2/3 inches high and 8 inches long (nominal).

2.3 CONCRETE BRICK

Concrete brick shall conform to ASTM C 55, Type I, Grade N-I. Concrete brick may be used where necessary for filling out in concrete masonry unit construction.

2.4 CONCRETE MASONRY UNITS (CMU)

Cement shall have a low alkali content and be of one brand. Units shall be of modular dimensions and air, water, or steam cured. Exposed surfaces of units shall be smooth and of uniform texture.

a. Hollow Load-Bearing Units: ASTM C 90, Type I or II, made with lightweight or normal weight aggregate. Provide load-bearing units for exterior walls, foundation walls, load-bearing walls, and shear walls.

b. Hollow Non-Load-Bearing Units: ASTM C 129, Type I or II, made with lightweight or normal weight aggregate. Load-bearing units may be provided in lieu of non-load-bearing units.

2.4.1 Aggregates

Lightweight aggregates and blends of lightweight and heavier aggregates in proportions used in producing the units, shall comply with the following requirements when tested for stain-producing iron compounds in accordance with ASTM C 641: by visual classification method, the iron stain deposited on the filter paper shall not exceed the "light stain" classification.

2.4.2 Kinds and Shapes

Units shall be modular in size and shall include closer, jamb, header, lintel, and bond beam units and special shapes and sizes to complete the work as indicated. In exposed interior masonry surfaces, units having a bullnose shall be used for vertical external corners except at door, window, and louver jambs. Radius of the bullnose shall be 1 inch. Units used in exposed masonry surfaces in any one building shall have a uniform fine to medium texture and a uniform color.

2.5 PRECAST CONCRETE ITEMS

Trim, lintels, column caps, and splashblocks shall be factory-made units from a plant regularly engaged in producing precast concrete units. Unless otherwise indicated, concrete shall be 4,000 psi minimum conforming to Section 03300 CAST-IN-PLACE STRUCTURAL CONCRETE using 1/2 inch to No. 4 nominal-size coarse aggregate, and minimum reinforcement shall be the reinforcement required for handling of the units. Clearance of 3/4 inch shall be maintained between reinforcement and faces of units. Unless precast-concrete items have been subjected during manufacture to saturated-steam pressure of at least 120 psi for at least 5 hours, the items, after casting, shall be either damp-cured for 24 hours or steam-cured and shall then be aged under cover for 28 days or longer. Cast-concrete members weighing over 80 pounds shall have built-in loops of galvanized wire or other approved provisions for lifting and anchoring. Units shall have beds and joints at right angles to the face, with sharp true arises and shall be cast with drip grooves on the underside where units overhang walls. Exposed-to-view surfaces shall be free of surface voids, spalls, cracks, and chipped or broken edges. Precast units exposed-to-view shall be of uniform appearance and color. Unless otherwise specified, units shall have a smooth dense finish. Prior to use, each item shall be wetted and inspected for crazing. Items showing evidence of dusting, spalling, crazing, or having surfaces treated with a protective coating will be rejected.

2.5.1 Lintels

Precast lintels, unless otherwise shown, shall be of a thickness equal to the wall and reinforced with two No. 4 bars for the full length. Top of lintels shall be labeled "TOP" or otherwise identified and each lintel shall be clearly marked to show location in the structure. In reinforced masonry, lintels shall conform to ACI 318/318M for flexural and shear strength and shall have at least 8 inches bearing at each end. Concrete shall have a minimum 28 day compressive strength of 4000 psi using 1/2 inch to No. 4 nominal-size coarse aggregate. Reinforcement shall conform to ASTM A 615/A 615M Grade 60. Limit lintel deflection due to dead plus live load to L/600 or 0.3 inches. Provide top and bottom bars for lintels over 36 inches in length.

2.5.2 Column Caps

Column caps shall be cast with washes.

2.5.3 Splash Blocks

Splash blocks shall be as detailed. Reinforcement shall be the manufacturer's standard.

2.6 OMITTED
2.7 OMITTED

2.8 MASONRY MORTAR

Type M mortar shall conform to ASTM C 270 and shall be used for foundation walls and piers. Mortar Type S shall conform to the proportion specification of ASTM C 270 except Type S cement-lime mortar proportions shall be 1 part cement, 1/2 part lime and 4-1/2 parts aggregate; Type N cement-lime mortar for remaining masonry work; except where higher compressive strength is indicated on structural drawings. When masonry cement ASTM C 91 is used the maximum air content shall be limited to 12 percent and performance equal to cement-lime mortar shall be verified. Verification of masonry cement performance shall be based on ASTM C 780 and ASTM C 1072. Pointing mortar in showers and kitchens shall contain ammonium stearate, or aluminum tri-stearate, or calcium stearate in an amount equal to 3 percent by weight of cement used. Cement shall have a low alkali content and be of one brand. Aggregates shall be from one source.

2.8.1 Admixtures for Masonry Mortar

In cold weather, a non-chloride based accelerating admixture may be used subject to approval. Accelerating admixture shall be non-corrosive, shall contain less than 0.2 percent chlorides, and shall conform to ASTM C 494/C 494M, Type C.

2.8.2 Colored Mortar

Mortar coloring shall be added to the mortar used for exposed brick masonry surfaces to produce a uniform color matching indicated color. Quantity of pigment to cementitious content of the masonry cement shall not exceed 5 by weight; carbon black shall not exceed 1 percent by weight. Quantity of pigment to cementitious content of cement-lime mix shall not exceed 10 percent by weight, carbon black no more than 2 percent by weight. Mortar coloring shall be chemically inert, of finely ground limeproof pigment, and

furnished in accurately pre-measured and packaged units that can be added to a measured amount of cement. Compressive strength of colored mortar shall equal Type S mortar.

2.8.3 Hydrated Lime and Alternates

Hydrated lime shall conform to ASTM C 207, Type S or SA. Lime alternates which have a current ICBO, ICBO IPC, Evaluation Report number whose findings state it may be used as an alternate to lime for Type M, S, and N, and O mortars will be deemed acceptable provided the user follows the manufacturer's proportions and mixing instructions as set forth in ICBO report.

2.8.4 Cement

Portland cement shall conform to ASTM C 150, Type I, II, or III. Masonry cement shall conform to ASTM C 91, Type S. Containers shall bear complete instructions for proportioning and mixing to obtain the required types of mortar. Cement for exposed brick mortar shall be white.

2.8.5 Pre-Mixed Mortar

Pre-mixed mortar shall conform to ASTM C 1142, Type RS.

2.8.6 Sand and Water

Sand shall conform to ASTM C 144. Water shall be clean, potable, and free from substances which could adversely affect the mortar.

2.9 OMITTED

2.10 GROUT AND READY-MIXED GROUT

Grout shall conform to ASTM C 476, coarse. Cement used in grout shall have a low alkali content. Grout slump shall be between 8 and 10 inches. Minimum grout strength shall be 2000 psi in 28 days, as tested by ASTM C 1019. Grout shall be used subject to the limitations of Table III. Proportions shall not be changed and materials with different physical or chemical characteristics shall not be used in grout for the work unless additional evidence is furnished that the grout meets the specified requirements. Ready-Mixed grout shall conform to ASTM C 94/C 94M.

2.10.1 Admixtures for Grout

In cold weather, a non-chloride based accelerating admixture may be used subject to approval; accelerating admixture shall be non-corrosive, shall contain less than 0.2 percent chlorides, and shall conform to ASTM C 494/C 494M, Type C. In general, air-entrainment, anti-freeze or chloride admixtures shall not be used except as approved by the Contracting Officer.

2.10.2 Grout Barriers

Grout barriers for vertical cores shall consist of fine mesh wire, fiberglass, or expanded metal.

2.11 ANCHORS, TIES, AND BAR POSITIONERS

Anchors and ties shall be fabricated without drips or crimps and shall be zinc-coated in accordance with ASTM A 153/A 153M, Class B-2. Steel wire

used for anchors and ties shall be fabricated from steel wire conforming to ASTM A 82. Anchors and ties shall be sized to provide a minimum of 5/8 inch mortar cover from either face.

2.11.1 Omitted

2.11.2 Wall Ties

Wall ties shall be rectangular-shaped or Z-shaped fabricated of 3/16 inch diameter zinc-coated steel wire. Rectangular wall ties shall be no less than 4 inches wide. Wall ties may also be of a continuous type conforming to paragraph JOINT REINFORCEMENT. Adjustable type wall ties, if approved for use, shall consist of two essentially U-shaped elements fabricated of 3/16 inch diameter zinc-coated steel wire. Adjustable ties shall be of the double pintle to eye type and shall allow a maximum of 1/2 inch eccentricity between each element of the tie. Play between pintle and eye opening shall be not more than 1/16 inch. The pintle and eye elements shall be formed so that both can be in the same plane.

2.11.3 Dovetail Anchors

Dovetail anchors shall be of the flexible wire type, 3/16 inch diameter zinc-coated steel wire, triangular shaped, and attached to a 12 gauge or heavier steel dovetail section. These anchors shall be used for anchorage of veneer wythes or composite-wall facings extending over the face of concrete columns, beams, or walls. Cells within vertical planes of these anchors shall be filled solid with grout for full height of walls or partitions, or solid units may be used. Dovetail slots are specified in Section 03300 CAST-IN-PLACE STRUCTURAL CONCRETE.

2.11.4 Veneer Anchors

Anchor assemblies for the attachment of the masonry veneer to the Precast autoclaved aerated concrete (PAAC) panels shall be designed for the design loadings shown. Anchors shall transfer the design loadings from the masonry veneer to the PAAC system or other support without exceeding the allowable stresses and deflections in the anchors. Length of anchor wires shall be such that the outermost wires lie between 5/8 and 1-1/4 inch from the face of the masonry veneer. Anchors wires shall not have drips. Wires for veneer anchors shall be rectangular or triangular hoops formed from 3/16 inch diameter steel wire conforming to ASTM A 82. Anchor assemblies including wires and anchor plates shall be hot-dip galvanized conforming to ASTM A 153/A 153M, Class B-2. The veneer anchor shall have a minimum capacity of 200 pounds. The load-displacement capacity of each veneer anchor, both in direct pull-out for tension and compression, shall be not less than 2000 pounds per inch (or a deflection of 0.05 inches per 100 pounds of load in tension or compression). In the direction perpendicular to the masonry veneer, the anchor assembly shall have a maximum play of 1/16 inch.

2.11.5 Veneer Anchor Fasteners

fasteners for attachment of the veneer anchors to the PAAC panels shall be as recommended by PAAC manufacturer and as required by design to provide the needed pullout load capacity but not less than No. 12. Fasteners shall be shown on the detail drawings. The length of fasteners shall be such that the screws penetrate the holding member by not less than 5/8 inch.

2.11.6 Bar Positioners

Bar positioners, used to prevent displacement of reinforcing bars during the course of construction, shall be factory fabricated from 9 gauge steel wire or equivalent, and coated with a hot-dip galvanized finish. Not more than one wire shall cross the cell.

2.12 JOINT REINFORCEMENT

Joint reinforcement shall be factory fabricated from steel wire conforming to ASTM A 82, welded construction. Tack welding will not be acceptable in reinforcement used for wall ties. Wire shall have zinc coating conforming to ASTM A 153/A 153M, Class B-2. All wires shall be a minimum of 9 gauge. Reinforcement shall be ladder type design, having one longitudinal wire in the mortar bed of each face shell for hollow units and one wire for solid units. Joint reinforcement shall be placed a minimum of 5/8 inch cover from either face. The distance between crosswires shall not exceed 16 inches. Joint reinforcement for straight runs shall be furnished in flat sections not less than 10 feet long. Joint reinforcement shall be provided with factory formed corners and intersections. If approved for use, joint reinforcement may be furnished with adjustable wall tie features.

2.13 REINFORCING STEEL BARS AND RODS

Reinforcing steel bars and rods shall conform to ASTM A 615/A 615M, Grade 60 or ASTM A 616/A 616M.

2.14 OMITTED
2.15 OMITTED

2.16 EXPANSION-JOINT MATERIALS

Backer rod and sealant shall be adequate to accommodate joint compression equal to 50 percent of the width of the joint. The backer rod shall be compressible rod stock of polyethylene foam, polyurethane foam, butyl rubber foam, or other flexible, nonabsorptive material as recommended by the sealant manufacturer. Sealant shall conform to Section 07900AJOINT SEALING.

2.17 FLASHING

Flashing shall be as specified in Section 07600 FLASHING AND SHEET METAL. Provide one of the following types.

a. Coated-Copper Flashing: 7 ounce, electrolytic copper sheet, uniformly coated on both sides with acidproof, alkaliproof, elastic bituminous compound. Factory apply coating to a weight of not less than 6 ounces per square foot (approximately 3 ounces per square foot on each side).

b. Copper or Stainless Steel Flashing: Copper, ASTM B 370, minimum 16 ounce weight; stainless steel, ASTM A 167, Type 301, 302, 304, or 316, 0.015 inch thick, No. 2D finish. Provide with factory-fabricated deformations that mechanically bond flashing against horizontal movement in all directions. Deformations shall consist of dimples, diagonal corrugations, or a combination of dimples and transverse corrugations.

:

a.

2.18 WEEP HOLE VENTILATORS

Weephole ventilators shall be prefabricated aluminum or plastic sized to form the proper size opening in head joints. Provide aluminum and plastic inserts with grill or screen-type openings designed to allow the passage of moisture from cavities and to prevent the entrance or insects. Ventilators shall be sized to match modular construction with a standard 3/8 inch mortar joint.

2.19 CAVITY DRAINAGE MATERIAL (MORTAR GUARD)

Free-draining mesh, made from polymer strands that will not degrade within the wall cavity. Provide one of the following configurations:

a. Strips, full-depth of cavity and 10 inches wide, with dovetail shaped notches 7 inches deep that prevent mesh from being clogged with mortar droppings.

b. Strips, not less than 1-1/2 inches thick and 10 inches wide, with dimpled surface designed to catch mortar droppings and prevent weep holes from being clogged with mortar

PART 3 EXECUTION

3.1 PREPARATION

Prior to start of work, masonry inspector shall verify the applicable conditions as set forth in ACI 530.1, inspection. The Contracting Officer will serve as inspector or will select a masonry inspector.

3.1.1 Hot Weather Installation

The following precautions shall be taken if masonry is erected when the ambient air temperature is more than 99 degrees F in the shade and the relative humidity is less than 50 percent or the ambient air temperature exceeds 90 degrees F and the wind velocity is more than 8 mph. All masonry materials shall be shaded from direct sunlight; mortar beds shall be spread no more than 4 feet ahead of masonry; masonry units shall be set within one minute of spreading mortar; and after erection, masonry shall be protected from direct exposure to wind and sun for 48 hours.

3.1.2 Cold Weather Installation

Before erecting masonry when ambient temperature or mean daily air temperature falls below 40 degrees F or temperature of masonry units is below 40 degrees F, a written statement of proposed cold weather construction procedures shall be submitted for approval. The following precautions shall be taken during all cold weather erection.

3.1.2.1 Protection

Ice or snow formed on the masonry bed shall be thawed by the application of heat. Heat shall be applied carefully until the top surface of the masonry is dry to the touch. Sections of masonry deemed frozen and damaged shall be removed before continuing construction of those sections.

a. Air Temperature 40 to 32 Degrees F. Sand or mixing water shall be heated to produce mortar temperatures between 40 and 120 degrees F.

b. Air Temperature 32 to 25 Degrees F. Sand and mixing water shall be heated to produce mortar temperatures between 40 and 120 degrees F. Temperature of mortar on boards shall be maintained above freezing.

c. Air Temperature 25 to 20 Degrees F. Sand and mixing water shall be heated to provide mortar temperatures between 40 and 120 degrees F. Temperature of mortar on boards shall be maintained above freezing. Sources of heat shall be used on both sides of walls under construction. Windbreaks shall be employed when wind is in excess of 15 mph.

d. Air Temperature 20 Degrees F and below. Sand and mixing water shall be heated to provide mortar temperatures between 40 and 120 degrees F. Enclosure and auxiliary heat shall be provided to maintain air temperature above 32 degrees F. Temperature of units when laid shall not be less than 20 degrees F.

3.1.2.2 Completed Masonry and Masonry Not Being Worked On

a. Mean daily air temperature 40 to 32 degrees F. Masonry shall be protected from rain or snow for 24 hours by covering with weather-resistive membrane.

b. Mean daily air temperature 32 to 25 degrees F. Masonry shall be completely covered with weather-resistant membrane for 24 hours.

c. Mean Daily Air Temperature 25 to 20 degrees F. Masonry shall be completely covered with insulating blankets or equally protected for 24 hours.

d. Mean Daily Temperature 20 degrees F and Below. Masonry temperature shall be maintained above 32 degrees F for 24 hours by enclosure and supplementary heat, by electric heating blankets, infrared heat lamps, or other approved methods.

3.1.3 Stains

Protect exposed surfaces from mortar and other stains. When mortar joints are tooled, remove mortar from exposed surfaces with fiber brushes and wooden paddles. Protect base of walls from splash stains by covering adjacent ground with sand, sawdust, or polyethylene.

3.1.4 Loads

Do not apply uniform loads for at least 12 hours or concentrated loads for at least 72 hours after masonry is constructed. Provide temporary bracing as required.

3.1.5 Surfaces

Surfaces on which masonry is to be placed shall be cleaned of laitance, dust, dirt, oil, organic matter, or other foreign materials and shall be slightly roughened to provide a surface texture with a depth of at least 1/8 inch. Sandblasting shall be used, if necessary, to remove laitance from pores and to expose the aggregate.

3.2 LAYING MASONRY UNITS

Coordinate masonry work with the work of other trades to accommodate built-in items and to avoid cutting and patching. Masonry units shall be laid in the indicated bond pattern. Facing courses shall be level with back-up courses, unless the use of adjustable ties has been approved in which case the tolerances shall be plus or minus 1/2 inch. Each unit shall be adjusted to its final position while mortar is still soft and plastic. Units that have been disturbed after the mortar has stiffened shall be removed, cleaned, and relaid with fresh mortar. Air spaces, cavities, chases, expansion joints, and spaces to be grouted shall be kept free from mortar and other debris. Units used in exposed masonry surfaces shall be selected from those having the least amount of chipped edges or other imperfections detracting from the appearance of the finished work. Vertical joints shall be kept plumb. Units being laid and surfaces to receive units shall be free of water film and frost. Solid units shall be laid in a nonfurrowed full bed of mortar. Mortar for veneer wythes shall be beveled and sloped toward the center of the wythe from the cavity side. Units shall be shoved into place so that the vertical joints are tight. Vertical joints of brick and the vertical face shells of concrete masonry units, except where indicated at control, expansion, and isolation joints, shall be completely filled with mortar. Mortar will be permitted to protrude up to 1/2 inch into the space or cells to be grouted. Means shall be provided to prevent mortar from dropping into the space below. In double wythe construction, the inner wythe may be brought up not more than 16 inches ahead of the outer wythe. Collar joints shall be filled with mortar or grout during the laying of the facing wythe, and filling shall not lag the laying of the facing wythe by more than 8 inches.

3.2.1 Forms and Shores

Provide bracing and scaffolding as required. Design bracing to resist wind pressure as required by local codes. Forms and shores shall be sufficiently rigid to prevent deflections which may result in cracking or other damage to supported masonry and sufficiently tight to prevent leakage of mortar and grout. Supporting forms and shores shall not be removed in less than 10 days.

3.2.2 Reinforced Concrete Masonry Units Walls

Where vertical reinforcement occurs, fill cores solid with grout. Lay units in such a manner as to preserve the unobstructed vertical continuity of cores to be filled. Embed the adjacent webs in mortar to prevent leakage of grout. Remove mortar fins protruding from joints before placing grout. Minimum clear dimensions of vertical cores shall be 2 by 3 inches. Position reinforcing accurately as indicated before placing grout. As masonry work progresses, secure vertical reinforcing in place at vertical intervals not to exceed 160 bar diameters. Use puddling rod or vibrator to consolidate the grout. Minimum clear distance between masonry and vertical reinforcement shall be not less than 1/2 inch. Unless indicated or specified otherwise, form splices by lapping bars not less than 40 bar diameters and wire tying them together.

3.2.3 Concrete Masonry Units

Units in piers, pilasters, columns, starting courses on footings, solid foundation walls, lintels, and beams, and where cells are to be filled with grout shall be full bedded in mortar under both face shells and webs.

Other units shall be full bedded under both face shells. Head joints shall be filled solidly with mortar for a distance in from the face of the unit not less than the thickness of the face shell. Foundation walls below grade shall be grouted solid. Jamb units shall be of the shapes and sizes to conform with wall units. Solid units may be incorporated in the masonry work where necessary to fill out at corners, gable slopes, and elsewhere as approved. Double walls shall be stiffened at wall-mounted plumbing fixtures by use of strap anchors, two above each fixture and two below each fixture, located to avoid pipe runs, and extending from center to center of the double wall. Walls and partitions shall be adequately reinforced for support of wall-hung plumbing fixtures when chair carriers are not specified.

3.2.4 Clay or Shale Brick Units

Brick facing shall be laid with the better face exposed. Brick shall be laid in bond with soldier and rowlock courses as indicated, with each course bonded at corners, unless otherwise indicated. Molded brick shall be laid with the frog side down. Brick that is cored, recessed, or has other deformations may be used in sills, treads, soldier courses, except where deformations will be exposed to view.

3.2.4.1 Wetting of Units

Wetting of clay, shale brick, or hollow brick units having an initial rate of absorption of more than 1 gram per minute per square inch of bed surface shall be in conformance with ASTM C 67. The method of wetting shall ensure that each unit is nearly saturated but surface dry when laid. Test clay or shale brick daily on the job, prior to laying, as follows: Using a wax pencil, draw a circle the size of a quarter on five randomly selected bricks. Apply 20 drops of water with a medicine dropper to the surface within the circle on each brick. If the average time that the water is completely absorbed in the five bricks is less than 1-1/2 minutes, wet bricks represented by the five bricks tested.

3.2.4.2 Solid Units

Bed, head, and collar joints shall be completely filled with mortar.

3.2.4.3 Omitted

3.2.4.4 Brick-Faced Walls

For brick-faced walls bond the three wythes in every sixth brick course with continuous horizontal joint reinforcement. Provide additional bonding ties spaced not more than 3 feet apart around the perimeter of and within 12 inches of all openings.

a. Brick Copings: Lay brick on edge, slope, and project not less than 1/2 inch beyond the face of the wall to form a wash and drip. Fill all joints solidly with mortar and tool.

3.2.4.5 Omitted

3.2.4.6 Reinforced Brick Walls

Provide two wythes of brick separated by a continuous space of indicated width filled with mortar and reinforced as indicated. Deeply furrowed bed joints will not be permitted. Lay wythes together. Provide metal ties to

prevent spreading of the wythes and to maintain vertical alignment of walls. Position reinforcing as indicated. Wire vertical reinforcing securely in position as the brickwork progresses.

3.2.4.7 Omitted

3.2.4.8 Brick Veneer

Provide a continuous cavity as indicated. Install brick veneer after precast autoclaved aerated concrete panels, masonry anchors, and flashing have been installed to the PAAC. Damaged flashing shall be repaired or replaced before brick veneer is installed. Means shall be provided to keep cavities clean and clear of mortar droppings. Provide mortar guard fill material as indicated.

3.2.5 Tolerances

Masonry shall be laid plumb, true to line, with courses level. Bond pattern shall be kept plumb throughout. Corners shall be square unless noted otherwise. Except for walls constructed of prefaced concrete masonry units, masonry shall be laid within the following tolerances (plus or minus unless otherwise noted):

TABLE II

TOLERANCES

Variation from the plumb in the lines and surfaces of columns, walls and arises	
In adjacent masonry units	1/8 inch
In 10 feet	1/4 inch
In 20 feet	3/8 inch
In 40 feet or more	1/2 inch
Variations from the plumb for external corners, expansion joints, and other conspicuous lines	
In 20 feet	1/4 inch
In 40 feet or more	1/2 inch
Variations from the level for exposed lintels, sills, parapets, horizontal grooves, and other conspicuous lines	
In 20 feet	1/4 inch
In 40 feet or more	1/2 inch
Variation from level for bed joints and top surfaces of bearing walls	
In 10 feet	1/4 inch
In 40 feet or more	1/2 inch
Variations from horizontal lines	

TOLERANCES

In 10 feet	1/4 inch
In 20 feet	3/8 inch
In 40 feet or more	1/2 inch
Variations in cross sectional dimensions of columns and in thickness of walls	
Minus	1/4 inch
Plus	1/2 inch

3.2.6 Cutting and Fitting

Full units of the proper size shall be used wherever possible, in lieu of cut units. Cutting and fitting, including that required to accommodate the work of others, shall be done by masonry mechanics using power masonry saws. Concrete masonry units may be wet or dry cut. Wet cut units, before being placed in the work, shall be dried to the same surface-dry appearance as uncut units being laid in the wall. Cut edges shall be clean, true and sharp. Openings in the masonry shall be made carefully so that wall plates, cover plates or escutcheons required by the installation will completely conceal the openings and will have bottoms parallel with the masonry bed joints. Reinforced masonry lintels shall be provided above openings over 12 inches wide for pipes, ducts, cable trays, and other wall penetrations, unless steel sleeves are used.

3.2.7 Jointing

Joints shall be tooled when the mortar is thumbprint hard. Horizontal joints shall be tooled last. Joints shall be brushed to remove all loose and excess mortar. Mortar joints shall be finished as follows:

3.2.7.1 Flush Joints

Joints in concealed masonry surfaces and joints at electrical outlet boxes in wet areas shall be flush cut. Flush cut joints shall be made by cutting off the mortar flush with the face of the wall. Joints in unparged masonry walls below grade shall be pointed tight. Flush joints for architectural units, such as fluted units, shall completely fill both the head and bed joints.

3.2.7.2 Tooled Joints

Joints in exposed exterior and interior masonry surfaces shall be tooled slightly concave. Joints shall be tooled with a jointer slightly larger than the joint width so that complete contact is made along the edges of the unit. Tooling shall be performed so that the mortar is compressed and the joint surface is sealed. Jointer of sufficient length shall be used to obtain a straight and true mortar joint.

3.2.7.3 Door and Window Frame Joints

On the exposed interior side of exterior frames, joints between frames and abutting masonry walls shall be raked to a depth of 3/8 inch. On the exterior side of exterior frames, joints between frames and abutting

masonry walls shall be raked to a depth of 3/8 inch.

3.2.8 Joint Widths

Joint widths shall be as follows:

3.2.8.1 Concrete Masonry Units

Concrete masonry units shall have 3/8 inch joints, except for prefaced concrete masonry units.

3.2.8.2 Omitted

3.2.8.3 Brick

Brick joint widths shall be the difference between the actual and nominal dimensions of the brick in either height or length. Brick expansion joint widths shall be as shown.

3.2.9 Embedded Items

Spaces around built-in items shall be filled with mortar. Openings around flush-mount electrical outlet boxes in wet locations shall be pointed with mortar. Anchors, ties, wall plugs, accessories, flashing, pipe sleeves and other items required to be built-in shall be embedded as the masonry work progresses. Anchors, ties and joint reinforcement shall be fully embedded in the mortar. Cells receiving anchor bolts and cells of the first course below bearing plates shall be filled with grout.

3.2.10 Unfinished Work

Unfinished work shall be stepped back for joining with new work. Toothing may be resorted to only when specifically approved. Loose mortar shall be removed and the exposed joints shall be thoroughly cleaned before laying new work.

3.2.11 Masonry Wall Intersections

Each course shall be masonry bonded at corners and elsewhere as shown. Masonry walls shall be anchored or tied together at corners and intersections with bond beam reinforcement and prefabricated corner or tee pieces of joint reinforcement as shown.

3.3 OMITTED

3.4 WEEP HOLES

Wherever through-wall flashing occurs, provide weep holes to drain flashing to exterior. Weep holes shall be open head joints at 24 inches o.c. Weep holes shall be provided not more than 24 inches on centers in mortar joints of the exterior wythe above wall flashing, over foundations, bond beams, and any other horizontal interruptions of the cavity. Weep holes shall be constructed using weep hole ventilators. Weep holes shall be kept free of mortar and other obstructions.

3.5 COMPOSITE WALLS

Masonry wythes shall be tied together with joint reinforcement or with unit wall ties. Facing shall be anchored to concrete backing with wire dovetail

anchors set in slots built in the face of the concrete as specified in Section 03300 CAST-IN-PLACE STRUCTURAL CONCRETE. The facing wythe shall be anchored or tied to the backup at a maximum spacing of 16 inches on center vertically and 24 inches on center horizontally. Unit ties shall be spaced not over 24 inches on centers horizontally, in courses not over 16 inches apart vertically, staggered in alternate courses. Ties shall be laid not closer than 5/8 inch to either masonry face. Ties shall not extend through control joints. Collar joints between masonry facing and masonry backup shall be filled solidly with grout.

3.6 MORTAR

Mortar shall be mixed in a mechanically operated mortar mixer for at least 3 minutes, but not more than 5 minutes. Measurement of ingredients for mortar shall be by volume. Ingredients not in containers, such as sand, shall be accurately measured by the use of measuring boxes. Water shall be mixed with the dry ingredients in sufficient amount to provide a workable mixture which will adhere to the vertical surfaces of masonry units. Mortar that has stiffened because of loss of water through evaporation shall be retempered by adding water to restore the proper consistency and workability. Mortar that has reached its initial set or that has not been used within 2-1/2 hours after mixing shall be discarded.

3.7 REINFORCING STEEL

Reinforcement shall be cleaned of loose, flaky rust, scale, grease, mortar, grout, or other coating which might destroy or reduce its bond prior to placing grout. Bars with kinks or bends not shown on the drawings shall not be used. Reinforcement shall be placed prior to grouting. Unless otherwise indicated, vertical wall reinforcement shall extend to within 2 inches of tops of walls.

3.7.1 Positioning Bars

Vertical bars shall be accurately placed within the cells at the positions indicated on the drawings. A minimum clearance of 1/2 inch shall be maintained between the bars and masonry units. Minimum clearance between parallel bars shall be one diameter of the reinforcement. Vertical reinforcing may be held in place using bar positioners located near the ends of each bar and at intermediate intervals of not more than 192 diameters of the reinforcement. Column and pilaster ties shall be wired in position around the vertical steel. Ties shall be in contact with the vertical reinforcement and shall not be placed in horizontal bed joints.

3.7.2 Splices

Bars shall be lapped a minimum of 48 diameters of the reinforcement. Welded or mechanical connections shall develop at least 125 percent of the specified yield strength of the reinforcement.

3.8 JOINT REINFORCEMENT INSTALLATION

Joint reinforcement shall be installed at 16 inches on center or as indicated. Reinforcement shall be lapped not less than 6 inches. Prefabricated sections shall be installed at corners and wall intersections. The longitudinal wires of joint reinforcement shall be placed to provide not less than 5/8 inch cover to either face of the unit.

3.9 PLACING GROUT

Cells containing reinforcing bars shall be filled with grout. Hollow masonry units in walls or partitions supporting plumbing, heating, or other mechanical fixtures, voids at door and window jambs, and other indicated spaces shall be filled solid with grout. Cells under lintel bearings on each side of openings shall be filled solid with grout for full height of openings. Walls below grade, lintels, and bond beams shall be filled solid with grout. Units other than open end units may require grouting each course to preclude voids in the units. Grout not in place within 1-1/2 hours after water is first added to the batch shall be discarded. Sufficient time shall be allowed between grout lifts to preclude displacement or cracking of face shells of masonry units. If blowouts, flowouts, misalignment, or cracking of face shells should occur during construction, the wall shall be torn down and rebuilt.

3.9.1 Vertical Grout Barriers for Fully Grouted Walls

Grout barriers shall be provided not more than 30 feet apart, or as required, to limit the horizontal flow of grout for each pour.

3.9.2 Horizontal Grout Barriers

Grout barriers shall be embedded in mortar below cells of hollow units receiving grout.

3.9.3 Grout Holes and Cleanouts

3.9.3.1 Grout Holes

Grouting holes shall be provided in slabs, spandrel beams, and other in-place overhead construction. Holes shall be located over vertical reinforcing bars or as required to facilitate grout fill in bond beams. Additional openings spaced not more than 16 inches on centers shall be provided where grouting of all hollow unit masonry is indicated. Openings shall not be less than 4 inches in diameter or 3 by 4 inches in horizontal dimensions. Upon completion of grouting operations, grouting holes shall be plugged and finished to match surrounding surfaces.

3.9.3.2 Cleanouts for Hollow Unit Masonry Construction

Cleanout holes shall be provided at the bottom of every pour in cores containing vertical reinforcement when the height of the grout pour exceeds 5 feet. Where all cells are to be grouted, cleanout courses shall be constructed using bond beam units in an inverted position to permit cleaning of all cells. Cleanout holes shall be provided at a maximum spacing of 32 inches where all cells are to be filled with grout. A new series of cleanouts shall be established if grouting operations are stopped for more than 4 hours. Cleanouts shall not be less than 3 by 4 inch openings cut from one face shell. Manufacturer's standard cutout units may be used at the Contractor's option. Cleanout holes shall not be closed until masonry work, reinforcement, and final cleaning of the grout spaces have been completed and inspected. For walls which will be exposed to view, cleanout holes shall be closed in an approved manner to match surrounding masonry.

3.9.3.3 Cleanouts for Solid Unit Masonry Construction

Cleanouts for construction of walls consisting of a grout filled cavity

between solid masonry wythes shall be provided at the bottom of every pour by omitting every other masonry unit from one wythe. A new series of cleanouts shall be established if grouting operations are stopped for more than 4 hours. Cleanout holes shall not be plugged until masonry work, reinforcement, and final cleaning of the grout spaces have been completed and inspected. For walls which will be exposed to view, cleanout holes shall be closed in an approved manner to match surrounding masonry.

3.9.4 Grouting Equipment

3.9.4.1 Grout Pumps

Pumping through aluminum tubes will not be permitted. Pumps shall be operated to produce a continuous stream of grout without air pockets, segregation, or contamination. Upon completion of each day's pumping, waste materials and debris shall be removed from the equipment, and disposed of outside the masonry.

3.9.4.2 Vibrators

Internal vibrators shall maintain a speed of not less than 5,000 impulses per minute when submerged in the grout. At least one spare vibrator shall be maintained at the site at all times. Vibrators shall be applied at uniformly spaced points not further apart than the visible effectiveness of the machine. Duration of vibration shall be limited to time necessary to produce satisfactory consolidation without causing segregation.

3.9.5 Grout Placement

Masonry shall be laid to the top of a pour before placing grout. Grout shall not be placed in two-wythe solid unit masonry cavity until mortar joints have set for at least 3 days during hot weather and 5 days during cold damp weather. Grout shall not be placed in hollow unit masonry until mortar joints have set for at least 24 hours. Grout shall be placed using a hand bucket, concrete hopper, or grout pump to completely fill the grout spaces without segregation of the aggregates. Vibrators shall not be inserted into lower pours that are in a semi-solidified state. The height of grout pours and type of grout used shall be limited by the dimensions of grout spaces as indicated in Table III. Low-lift grout methods may be used on pours up to and including 5 feet in height. High-lift grout methods shall be used on pours exceeding 5 feet in height.

3.9.5.1 Low-Lift Method

Grout shall be placed at a rate that will not cause displacement of the masonry due to hydrostatic pressure of the grout. Mortar protruding more than 1/2 inch into the grout space shall be removed before beginning the grouting operation. Grout pours 12 inches or less in height shall be consolidated by mechanical vibration or by puddling. Grout pours over 12 inches in height shall be consolidated by mechanical vibration and reconsolidated by mechanical vibration after initial water loss and settlement has occurred. Vibrators shall not be inserted into lower pours that are in a semi-solidified state. Low-lift grout shall be used subject to the limitations of Table III.

3.10 BOND BEAMS

Bond beams shall be filled with grout and reinforced as indicated on the drawings. Grout barriers shall be installed under bond beam units to

retain the grout as required. Reinforcement shall be continuous, including around corners, except through control joints or expansion joints, unless otherwise indicated on the drawings. Where splices are required for continuity, reinforcement shall be lapped 48 bar diameters. A minimum clearance of 1/2 inch shall be maintained between reinforcement and interior faces of units.

3.11 OMITTED

3.12 BRICK EXPANSION JOINTS

Brick expansion joints shall be provided and constructed as shown on the drawings. Joints shall be kept free of mortar and other debris.

3.13 SHELF ANGLES

Shelf angles shall be adjusted as required to keep the masonry level and at the proper elevation. Shelf angles shall be galvanized. Shelf angles shall be provided in sections not longer than 10 feet and installed with a 1/4 inch gap between sections. Shelf angles shall be mitered and welded at building corners with each angle not shorter than 4 feet, unless limited by wall configuration.

3.14 LINTELS

3.14.1 Masonry Lintels

Masonry lintels shall be constructed with lintel units filled solid with grout in all courses and reinforced with a minimum of two No. 4 bars in the bottom course unless otherwise indicated on the drawings. Lintel reinforcement shall extend beyond each side of masonry opening 40 bar diameters or 24 inches, whichever is greater. Reinforcing bars shall be supported in place prior to grouting and shall be located 1/2 inch above the bottom inside surface of the lintel unit.

3.14.2 Precast Concrete and Steel Lintels

Precast concrete and steel lintels shall be as shown on the drawings. Lintels shall be set in a full bed of mortar with faces plumb and true. Steel and precast lintels shall have a minimum bearing length of 8 inches unless otherwise indicated on the drawings.

3.15 COPINGS AND CAPS

Copings and caps shall be set in a full bed of mortar with faces plumb and true.

3.16 ANCHORAGE TO CONCRETE

3.16.1 Anchorage to Concrete

Anchorage of masonry to the face of concrete columns, beams, or walls shall be with dovetail anchors spaced not over 16 inches on centers vertically and 24 inches on center horizontally.

3.17 OMITTED
3.18 OMITTED

3.19 SPLASH BLOCKS

Splash blocks shall be located as shown.

3.20 POINTING AND CLEANING

After mortar joints have attained their initial set, but prior to hardening, mortar and grout daubs or splashings shall be completely removed from masonry-unit surfaces that will be exposed or painted. Before completion of the work, defects in joints of masonry to be exposed or painted shall be raked out as necessary, filled with mortar, and tooled to match existing joints. Immediately after grout work is completed, scum and stains which have percolated through the masonry work shall be removed using a high pressure stream of water and a stiff bristled brush. Masonry surfaces shall not be cleaned, other than removing excess surface mortar, until mortar in joints has hardened. Masonry surfaces shall be left clean, free of mortar daubs, dirt, stain, and discoloration, including scum from cleaning operations, and with tight mortar joints throughout. Metal tools and metal brushes shall not be used for cleaning.

3.20.1 Concrete Masonry Unit and Concrete Brick Surfaces

Exposed concrete masonry unit and concrete brick surfaces shall be dry-brushed at the end of each day's work and after any required pointing, using stiff-fiber bristled brushes.

3.20.2 Clay or Shale Brick Surfaces

Exposed clay or shale brick masonry surfaces shall be cleaned as necessary to obtain surfaces free of stain, dirt, mortar and grout daubs, efflorescence, and discoloration or scum from cleaning operations. After cleaning, the sample panel of similar material shall be examined for discoloration or stain as a result of cleaning. If the sample panel is discolored or stained, the method of cleaning shall be changed to assure that the masonry surfaces in the structure will not be adversely affected. The exposed masonry surfaces shall be water-soaked and then cleaned with a solution proportioned 1/2 cup trisodium phosphate and 1/2 cup laundry detergent to one gallon of water or cleaned with a proprietary masonry cleaning agent specifically recommended for the color and texture by the clay products manufacturer. The solution shall be applied with stiff fiber brushes, followed immediately by thorough rinsing with clean water. Proprietary cleaning agents shall be used in conformance with the cleaning product manufacturer's printed recommendations. Efflorescence shall be removed in conformance with the brick manufacturer's recommendations.

3.21 OMITTED

3.22 PROTECTION

Facing materials shall be protected against staining. Top of walls shall be covered with nonstaining waterproof covering or membrane when work is not in progress. Covering of the top of the unfinished walls shall continue until the wall is waterproofed with a complete roof or parapet system. Covering shall extend a minimum of 2 feet down on each side of the wall and shall be held securely in place. Before starting or resuming, top surface of masonry in place shall be cleaned of loose mortar and foreign

material.

3.23 TEST REPORTS

3.23.1 Field Testing of Mortar

At least three specimens of mortar shall be taken each day. A layer of mortar 1/2 to 5/8 inch thick shall be spread on the masonry units and allowed to stand for one minute. The specimens shall then be prepared and tested for compressive strength in accordance with ASTM C 780.

3.23.2 Field Testing of Grout

Field sampling and testing of grout shall be in accordance with the applicable provisions of ASTM C 1019. A minimum of three specimens of grout per day shall be sampled and tested. Each specimen shall have a minimum ultimate compressive strength of 2000 psi at 28 days.

3.23.3 Efflorescence Test

Brick which will be exposed to weathering shall be tested for efflorescence. Tests shall be scheduled far enough in advance of starting masonry work to permit retesting if necessary. Sampling and testing shall conform to the applicable provisions of ASTM C 67. Units meeting the definition of "effloresced" will be subject to rejection.

-- End of Section --

SECTION TABLE OF CONTENTS

DIVISION 05 - METALS

SECTION 05120

STRUCTURAL STEEL

07/02

PART 1 GENERAL

1.1 REFERENCES
1.2 SYSTEM DESCRIPTION
1.3 MODIFICATIONS TO REFERENCES
1.4 SUBMITTALS
1.5 AISC QUALITY CERTIFICATION
1.6 OMITTED
1.7 QUALITY ASSURANCE
1.7.1 Drawing Requirements
1.7.2 Certifications
1.7.2.1 Omitted
1.7.2.2 Erection Plan
1.7.2.3 Welding Procedures and Qualifications

PART 2 PRODUCTS

2.1 STEEL
2.1.1 Structural Steel
2.1.2 Omitted
2.1.3 Omitted
2.1.4 Omitted
2.1.5 Structural Shapes for Use in Building Framing
2.1.6 Structural Steel Tubing
2.2 BOLTS, NUTS, AND WASHERS
2.2.1 Structural Steel
2.2.1.1 Bolts
2.2.1.2 Nuts
2.2.1.3 Washers
2.2.2 High-Strength Structural Steel and Structural Steel Tubing
2.2.2.1 Bolts
2.2.2.2 Nuts
2.2.2.3 Washers
2.2.3 Omitted
2.2.4 Foundation Anchorage
2.2.4.1 Bolts
2.2.4.2 Nuts
2.2.4.3 Washers
2.2.5 Load Indicator Washers
2.3 STRUCTURAL STEEL ACCESSORIES
2.3.1 Welding Electrodes and Rods
2.3.2 Nonshrink Grout
2.3.3 Welded Shear Stud Connectors
2.3.4 Omitted
2.4 SHOP PRIMER
2.5 OMITTED
2.6 OMITTED
2.7 FABRICATION

2.7.1 Markings
2.7.2 Shop Primer
2.7.2.1 Cleaning
2.7.2.2 Primer
2.7.3 Omitted
2.7.4 Surface Finishes

PART 3 EXECUTION

3.1 FABRICATION
3.2 OMITTED
3.3 ERECTION
3.3.1 STORAGE
3.4 CONNECTIONS
3.4.1 Common Grade Bolts
3.4.2 High-Strength Bolts
3.4.2.1 Installation of Load Indicator Washers (LIW)
3.5 WELDING
3.5.1 Removal of Temporary Welds, Run-Off Plates, and Backing Strips
3.6 SHOP PRIMER REPAIR
3.6.1 Field Priming
3.7 OMITTED
3.8 FIELD QUALITY CONTROL
3.8.1 Welds
3.8.1.1 Visual Inspection
3.8.2 Load Indicator Washers
3.8.2.1 Load Indicator Washer Compression
3.8.3 Omitted
3.8.4 High-Strength Bolts
3.8.4.1 Testing Bolt, Nut, and Washer Assemblies
3.8.4.2 Inspection
3.8.4.3 Testing

-- End of Section Table of Contents --

UFGS-05120 (July 2002)

SECTION 05120

STRUCTURAL STEEL
07/02

PART 1 GENERAL

1.1 REFERENCES

The publications listed below form a part of this specification to the extent referenced. The publications are referred to in the text by the basic designation only.

AMERICAN INSTITUTE OF STEEL CONSTRUCTION (AISC)

AISC FCD	(1995a) Quality Certification Program Description
AISC 316	(1989) ASD Manual of Steel Construction
AISC 317	(1992; Errata 1994) Connections
AISC 325	LRFD Manual of Steel Construction
AISC 326	(1983) Detailing for Steel Construction
AISC 303	(2000) Steel Buildings and Bridges
AISC 348	(1985) Allowable Stress Design Specification for Structural Joints Using ASTM A325 or A490 Bolts
AISC 348	(1988) Load and Resistance Factor Design Specifications for Structural Joints Using ASTM A325 or A490 Bolts
AISC S340	(1992) Metric Properties of Structural Shapes with Dimensions According to ASTM A6M
AISC 350	(1993) Load and Resistance Factor Design Specification for Structural Steel Buildings

ASME INTERNATIONAL (ASME)

ASME B46.1	(1995) Surface Texture, (Surface Roughness, Waviness, and Lay)

AMERICAN SOCIETY FOR TESTING AND MATERIALS (ASTM)

ASTM A 6/A 6M	(1998a) General Requirements for Rolled Structural Steel Bars, Plates, Shapes, and Sheet Piling

ASTM A 36/A 36M	(1997; Rev. A) Carbon Structural Steel
ASTM A 307	(1997) Carbon Steel Bolts and Studs, 60,000 psi Tensile Strength
ASTM A 325M	(1997) High-Strength Bolts for Structural Steel Joints (Metric)
ASTM A 325	(1997) Structural Bolts, Steel, Heat Treated, 120/105 ksi Minimum Tensile Strength
ASTM A 490	(1997) Heat-Treated Steel Structural Bolts, 150 ksi Minimum Tensile Strength
ASTM A 500	(1999) Cold-Formed Welded and Seamless Carbon Steel Structural Tubing in Rounds and Shapes
ASTM A 501	(1999) Hot-Formed Welded and Seamless Carbon Steel Structural Tubing
ASTM A 514/A 514M	(1999) High-Yield-Strength, Quenched and Tempered Alloy Steel Plate, Suitable for Welding
ASTM A 563	(1997) Carbon and Alloy Steel Nuts
ASTM A 992/A 992M	(1998e1) Steel for Structural Shapes for Use in Building Framing
ASTM B 695	(1991; R 1997) Coatings of Zinc Mechanically Deposited on Iron and Steel
ASTM C 827	(1995; R 1997) Change in Height at Early Ages of Cylindrical Specimens from Cementitious Mixtures
ASTM C 1107	(1999) Packaged Dry, Hydraulic-Cement Grout (Nonshrink)
ASTM F 436	(1993) Hardened Steel Washers
ASTM F 844	(1998) Washers, Steel, Plain (Flat), Unhardened for General Use
ASTM F 959	(1999; Rev. A) Compressible-Washer-Type Direct Tension Indicators for Use with Structural Fasteners

AMERICAN WELDING SOCIETY (AWS)

AWS D1.1/D1.1M	(2000) Structural Welding Code - Steel

STEEL STRUCTURES PAINTING COUNCIL (SSPC)

SSPC SP 3	(1995) Power Tool Cleaning

SSPC SP 6	(1994) Commercial Blast Cleaning
SSPC Paint 25	(1991) Red Iron Oxide, Zinc Oxide, Raw Linseed Oil and Alkyd Primer (Without Lead and Chromate Pigments)
SSPC PA 1	(1991) Shop, Field, and Maintenance Painting
SSPC PS 13.01	(1991) Epoxy-Polyamide Painting System

1.2 SYSTEM DESCRIPTION

Provide the structural steel system, including shop primer, complete and ready for use. Structural steel systems including design, materials, installation, workmanship, fabrication, assembly, erection, inspection, quality control, and testing shall be provided in accordance with AISC 325 except as modified in this contract.

1.3 MODIFICATIONS TO REFERENCES

In AISC 325, AISC 350, AISC 303, AISC 348, and AISC S340, except as modified in this section, shall be considered a part of AISC M018L and AISC M019L and is referred to in this section as AISC 325.

1.4 SUBMITTALS

Government approval is required for submittals with a "G" designation; submittals not having a "G" designation are for information only or as otherwise designated. When used, a designation following the "G" designation identifies the office that will review the submittal for the Government. The following shall be submitted in accordance with Section 01330 SUBMITTAL PROCEDURES:

SD-02 Shop Drawings

Erection drawings, including description of temporary supports; G, AE

Fabrication drawings, including description of connections; G, AE

SD-03 Product Data

Load indicator washers

Shop primer

Include test report for Class B primer.

SD-06 Test Reports

Class B coating

Bolts, nuts, and washers

Supply the certified manufacturer's mill reports which clearly show the applicable ASTM mechanical and chemical requirements together with the actual test results for the supplied fasteners.

SD-07 Certificates

Steel

Bolts, nuts, and washers

Shop primer

Welding electrodes and rods

Nonshrink grout

AISC Quality Certification

Welding procedures and qualifications

1.5 AISC QUALITY CERTIFICATION

Work shall be fabricated in an AISC certified Category Sbd fabrication plant.

1.6 OMITTED

1.7 QUALITY ASSURANCE

1.7.1 Drawing Requirements

Submit fabrication drawings for approval prior to fabrication. Prepare in accordance with AISC 326, AISC 316 and AISC 317. Drawings shall not be reproductions of contract drawings. Include complete information for the fabrication and erection of the structure's components, including the location, type, and size of bolts, welds, member sizes and lengths, connection details, blocks, copes, and cuts. Use AWS standard welding symbols.

1.7.2 Certifications

1.7.2.1 Omitted

1.7.2.2 Erection Plan

Submit for record purposes. Indicate the sequence of erection, temporary shoring and bracing, and a detailed sequence of welding, including each welding procedure required.

1.7.2.3 Welding Procedures and Qualifications

Prior to welding, submit certification for each welder stating the type of welding and positions qualified for, the code and procedure qualified under, date qualified, and the firm and individual certifying the qualification tests. If the qualification date of the welding operator is more than one-year old, the welding operator's qualification certificate shall be accompanied by a current certificate by the welder attesting to the fact that he has been engaged in welding since the date of certification, with no break in welding service greater than 6 months.

PART 2 PRODUCTS

2.1 STEEL

2.1.1 Structural Steel

ASTM A 36/A 36M.

2.1.2 Omitted
2.1.3 Omitted
2.1.4 Omitted

2.1.5 Structural Shapes for Use in Building Framing

Wide flange shapes, ASTM A 992/A 992M, Grade 50..

2.1.6 Structural Steel Tubing

ASTM A 500, Grade B; ASTM A 501.

2.2 BOLTS, NUTS, AND WASHERS

Provide the following unless indicated otherwise.

2.2.1 Structural Steel

2.2.1.1 Bolts

ASTM A 307, Grade A; ASTM A 325, Type 1. The bolt heads and the nuts of the supplied fasteners must be marked with the manufacturer's identification mark, the strength grade and type specified by ASTM specifications.

2.2.1.2 Nuts

ASTM A 563, Grade and Style for applicable ASTM bolt standard recommended.

2.2.1.3 Washers

ASTM F 844 washers for ASTM A 307 bolts, and ASTM F 436 washers for ASTM A 325 bolts.

2.2.2 High-Strength Structural Steel and Structural Steel Tubing

2.2.2.1 Bolts

ASTM A 325, Type 1.

2.2.2.2 Nuts

ASTM A 563, Grade and Style as specified in the applicable ASTM bolt standard.

2.2.2.3 Washers

ASTM F 436, plain carbon steel.

2.2.3 Omitted

2.2.4 Foundation Anchorage

2.2.4.1 Bolts

ASTM A 307.

2.2.4.2 Nuts

ASTM A 563, Grade A, hex style.

2.2.4.3 Washers

ASTM F 844.

2.2.5 Load Indicator Washers

ASTM F 959. Provide ASTM B 695, Class 50, Type 1 galvanizing.

2.3 STRUCTURAL STEEL ACCESSORIES

2.3.1 Welding Electrodes and Rods

AWS D1.1/D1.1M.

2.3.2 Nonshrink Grout

ASTM C 1107, with no ASTM C 827 shrinkage. Grout shall be nonmetallic.

2.3.3 Welded Shear Stud Connectors

AWS D1.1/D1.1M.

2.3.4 Omitted

2.4 SHOP PRIMER

SSPC Paint 25, (alkyd primer) or SSPC PS 13.01 epoxy-polyamide, green primer (Form 150) type 1, except provide a Class B coating in accordance with AISC 316 and AISC 317 for slip critical joints. Primer shall conform to Federal, State, and local VOC regulations. If flash rusting occurs, re-clean the surface prior to application of primer.

2.5 OMITTED
2.6 OMITTED

2.7 FABRICATION

2.7.1 Markings

Prior to erection, members shall be identified by a painted erection mark. Connecting parts assembled in the shop for reaming holes in field connections shall be match marked with scratch and notch marks. Do not locate erection markings on areas to be welded. Do not locate match markings in areas that will decrease member strength or cause stress concentrations.

2.7.2 Shop Primer

Shop prime structural steel, except as modified herein, in accordance with SSPC PA 1. Do not prime steel surfaces embedded in concrete, galvanized surfaces, surfaces designed as part of a composite steel concrete section, or surfaces within 0.5 inch of the toe of the welds prior to welding (except surfaces on which metal decking is to be welded). Slip critical surfaces shall be primed with a Class B coating. Prior to assembly, prime surfaces which will be concealed or inaccessible after assembly. Do not apply primer in foggy or rainy weather; when the ambient temperature is below 45 degrees F or over 95 degrees F; or when the primer may be exposed to temperatures below 40 degrees F within 48 hours after application, unless approved otherwise by the Contracting Officer.

2.7.2.1 Cleaning

SSPC SP 6, except steel exposed in spaces above ceilings, attic spaces, furred spaces, and chases that will be hidden to view in finished construction may be cleaned to SSPC SP 3 when recommended by the shop primer manufacturer. Maintain steel surfaces free from rust, dirt, oil, grease, and other contaminants through final assembly.

2.7.2.2 Primer

Apply primer to a minimum dry film thickness of 2.0 mil except provide the Class B coating for slip critical joints in accordance with the coating manufacturer's recommendations. Repair damaged primed surfaces with an additional coat of primer.

2.7.3 Omitted

2.7.4 Surface Finishes

ASME B46.1 maximum surface roughness of 125 for pin, pinholes, and sliding bearings, unless indicated otherwise.

PART 3 EXECUTION

3.1 FABRICATION

Fabrication shall be in accordance with the applicable provisions of AISC 316. Fabrication and assembly shall be done in the shop to the greatest extent possible. The fabricating plant shall be certified under the AISC FCD for Category Sbd structural steelwork. Compression joints depending on contact bearing shall have a surface roughness not in excess of 500 micro inches as determined by ASME B46.1, and ends shall be square within the tolerances for milled ends specified in ASTM A 6/A 6M. Structural steelwork, except surfaces of steel to be encased in concrete, surfaces to be field welded, surfaces to be fireproofed, and contact surfaces of friction-type high-strength bolted connections shall be prepared for painting in accordance with endorsement "P" of AISC FCD and primed with the specified paint.

3.2 OMITTED

3.3 ERECTION

a: Erection of structural steel shall be in accordance with the applicable provisions of AISC 325. Erection plan shall be

reviewed, stamped and sealed by a licensed structural engineer.

Provide for drainage in structural steel. After final positioning of steel members, provide full bearing under base plates and bearing plates using nonshrink grout. Place nonshrink grout in accordance with the manufacturer's instructions.

3.3.1 STORAGE

Material shall be stored out of contact with the ground in such manner and location as will minimize deterioration.

3.4 CONNECTIONS

Except as modified in this section, connections not detailed shall be designed in accordance with AISC 350. Build connections into existing work. Do not tighten anchor bolts set in concrete with impact torque wrenches. Punch, subpunch and ream, or drill bolt holes. Bolts, nuts, and washers shall be clean of dirt and rust, and lubricated immediately prior to installation.

3.4.1 Common Grade Bolts

ASTM A 307 bolts shall be tightened to a "snug tight" fit. "Snug tight" is the tightness that exists when plies in a joint are in firm contact. If firm contact of joint plies cannot be obtained with a few impacts of an impact wrench, or the full effort of a man using a spud wrench, contact the Contracting Officer for further instructions.

3.4.2 High-Strength Bolts

ASTM A 325 and ASTM A 490 bolts shall be fully tensioned to 70 percent of their minimum tensile strength. Provide load indicator bolts or washers in all ASTM A 325M or ASTM A 490 bolted connections, except provide only load indicator washers for slip critical connections. Direct tension indicator tightening, or installation of alternate design fasteners, shall be the only acceptable tightening methods. Use only direct tension indicator tightening for slip critical connections. Bolts shall be installed in connection holes and initially brought to a snug tight fit. After the initial tightening procedure, bolts shall then be fully tensioned, progressing from the most rigid part of a connection to the free edges.

3.4.2.1 Installation of Load Indicator Washers (LIW)

ASTM F 959. Where possible, the LIW shall be installed under the bolt head and the nut shall be tightened. If the LIW is installed adjacent to the turned element, provide a flat ASTM F 436 washer between the LIW and nut when the nut is turned for tightening, and between the LIW and bolt head when the bolt head is turned for tightening. In addition to the LIW, provide flat ASTM F 436 washers under both the bolt head and nut when ASTM A 490 bolts are used.

3.5 WELDING

AWS D1.1/D1.1M, except use only shielded metal arc welding. Do not stress relieve ASTM A 514/A 514M steel by heat treatment. Provide AWS D1.1/D1.1M qualified welders, welding operators, and tackers.

The contractor shall develop and submit the Welding Procedure

Specifications (WPS) for all welding, including welding done using prequalified procedures. Prequalified procedures may be submitted for information only; however, procedures that are not prequalified shall be submitted for approval.

3.5.1 Removal of Temporary Welds, Run-Off Plates, and Backing Strips

Remove only from finished areas.

3.6 SHOP PRIMER REPAIR

Repair shop primer in accordance with the paint manufacturer's recommendation for surfaces damaged by handling, transporting, cutting, welding, or bolting.

3.6.1 Field Priming

Field priming of steel exposed to the weather, or located in building areas without HVAC for control of relative humidity. After erection, the field bolt heads and nuts, field welds, and any abrasions in the shop coat shall be cleaned and primed with paint of the same quality as that used for the shop coat.

3.7 OMITTED

3.8 FIELD QUALITY CONTROL

Perform field tests, and provide labor, equipment, and incidentals required for testing, except that electric power for field tests will be furnished as set forth in Division 1. The Contracting Officer shall be notified in writing of defective welds, bolts, nuts, and washers within 7 working days of the date of weld inspection.

3.8.1 Welds

3.8.1.1 Visual Inspection

AWS D1.1/D1.1M. Furnish the services of AWS-certified welding inspectors for fabrication and erection inspection and testing and verification inspections. Welding inspectors shall visually inspect and mark welds, including fillet weld end returns.

3.8.2 Load Indicator Washers

3.8.2.1 Load Indicator Washer Compression

Load indicator washers shall be tested in place to verify that they have been compressed sufficiently to provide the 0.015 inch gap when the load indicator washer is placed under the bolt head and the nut is tightened, and to provide the 0.005 inch gap when the load indicator washer is placed under the turned element, as required by ASTM F 959.

3.8.3 Omitted

3.8.4 High-Strength Bolts

3.8.4.1 Testing Bolt, Nut, and Washer Assemblies

Test a minimum of 3 bolt, nut, and washer assemblies from each mill

certificate batch in a tension measuring device at the job site prior to the beginning of bolting start-up. Demonstrate that the bolts and nuts, when used together, can develop tension not less than the provisions specified in AISC 348, Table 4, depending on bolt size and grade. The bolt tension shall be developed by tightening the nut. A representative of the manufacturer or supplier shall be present to ensure that the fasteners are properly used, and to demonstrate that the fastener assemblies supplied satisfy the specified requirements.

3.8.4.2 Inspection

Inspection procedures shall be in accordance with AISC 348, Section 9. Confirm and report to the Contracting Officer that the materials meet the project specification and that they are properly stored. Confirm that the faying surfaces have been properly prepared before the connections are assembled. Observe the specified job site testing and calibration, and confirm that the procedure to be used provides the required tension. Monitor the work to ensure the testing procedures are routinely followed on joints that are specified to be fully tensioned.

3.8.4.3 Testing

The Government has the option to perform nondestructive tests on 5 percent of the installed bolts to verify compliance with pre-load bolt tension requirements. The nondestructive testing will be done in-place using an ultrasonic measuring device or any other device capable of determining in-place pre-load bolt tension. The test locations shall be selected by the Contracting Officer. If more than 10 percent of the bolts tested contain defects identified by testing, then all bolts used from the batch from which the tested bolts were taken, shall be tested. Retest new bolts after installation.

-- End of Section --

SECTION TABLE OF CONTENTS

DIVISION 05 - METALS

SECTION 05450

PRE-ENGINEERED LIGHT GAUGE STEEL FRAMING SYSTEM

09/97

PART 1 GENERAL

1.1 SCOPE
1.2 REFERENCES
1.3 FABRICATOR'S QUALIFICATIONS
1.4 SUBMITTALS
1.5 DELIVERY, STORAGE AND HANDLING

PART 2 PRODUCTS

2.1 FRAMING COMPONENTS
2.1.1 Available Manufacturer
2.1.2 Design, Analysis and Computation
2.1.3 Galvanized Structural Members
2.1.4 Steel Members
2.2 FASTENERS

PART 3 EXECUTION

3.1 FABRICATION
3.2 ERECTION

-- End of Section Table of Contents --

SAVH-05450
(MOD 05/03)

SECTION 05450

PRE-ENGINEERED LIGHT GAUGE STEEL FRAMING SYSTEM
09/97

PART 1 GENERAL

1.1 SCOPE

The work under this section consists of furnishing and installing all pre-engineered light gauge roof framing system as shown on drawings and as specified herein including headers, outriggers, supplemental rafters and incidental framing for a complete assembly within the extent shown on the drawings.

Pre-engineered light gauge steel framing include planar structural units consisting of welded, screwed or bolted connected members which are fabricated, cut and assembled prior to delivery or at the job site.

1.2 REFERENCES

The publications listed below form a part of this specification to the extent referenced. The publications are referred to in the text by basic designation only.

AMERICAN SOCIETY FOR TESTING AND MATERIALS (ASTM)

ASTM A 653/A 653M	(2000) Steel Sheet, Zinc-Coated (Galvanized) or Zinc-Iron Alloy-Coated (Galvannealed) by the Hot-Dip Process

1.3 FABRICATOR'S QUALIFICATIONS

Trusses and other framing system members shall be designed, fabricated, and erected by a firm which has a record including a minimum of 5 years of successfully fabricating trussed assemblies similar to scope required and which practices a quality control program which includes inspection by an independent inspection and testing agency.

1.4 SUBMITTALS

Government approval is required for submittals with a "G" designation; submittals not having a "G" designation are for information only. When used, a designation following the "G" designation identifies the office that will review the submittal for the Government. The following shall be submitted in accordance with Section 01330 SUBMITTAL PROCEDURES:

SD-02 Shop Drawings

Shop Drawings; G,RE

Submit shop drawings showing shapes and dimensions of members to be used including pitch, span, camber configuration and spacing for each type or configuration of truss required. Show all bearing and anchorage details. Specify and detail all supplemental strapping, bracing clips and other accessories required for proper installation. Shop drawings shall include all placement sequences and instructions. Shop drawings shall be signed and sealed by a structural engineer registered in the state in which the project is located.

SD-03 Product Data

Product Data

Submit fabricator's technical data covering materials, shapes, hardware, fabrication process, handling and erection.

SD-06 Test Reports

Design Analysis; G,AE

To the extent engineering design considerations are indicated as fabricator's responsibility, submit design analysis and test reports indicating loading, section properties, allowable stress, stress diagrams and calculations, integrity of connections and interfaces, and similar information needed for analysis and to ensure trusses comply with requirements. All designs shall bear the name and seal of a structural engineer licensed to practice in the state where trusses are to be erected.

SD-07 Certificates

Certificate of Compliance

Submit certificate, signed by an officer of fabricating firm, indicating trusses and related assemblies to be supplied for this project comply with all indicated requirements.

1.5 DELIVERY, STORAGE AND HANDLING

Handle and store framing system materials and accessories, and in accordance with manufacturer's instructions to avoid damage from bending, overturning or other cause for which truss is not designed to resist or endure. Storage shall be off-ground in a dry ventilated space or protect with waterproof coverings.

Time fabrication and erection of trusses to avoid extended on-site storage and to avoid delaying work of other trades whose work must follow erection of trusses.

PART 2 PRODUCTS

2.1 FRAMING COMPONENTS

2.1.1 Available Manufacturer

Subject to compliance with requirements, framing shapes and components for pre-engineered light gauge prefabricated steel trusses shall be as manufactured or recommended by approved manufacturer.

2.1.2 Design, Analysis and Computation

Design, analysis, and computation of section properties shall be in conformance with the specification for the Design of Cold-Formed Steel Structural Members of the American Iron and Steel Institute.

2.1.3 Galvanized Structural Members

All galvanized structural members shall be formed from steel that corresponds to the requirements of ASTM A 653/A 653M, Grade B (minimum yield of 36 ksi) for 18 gauge steel or lighter and ASTM A 653/A 652M, Grade D (minimum yield of 50 ksi) for 16 gauge or heavier. All members to which roof clips are directly attached shall be 16 gauge or heavier.

2.1.4 Steel Members

All steel members shall be galvanized with a G60 coating minimum. All truss top and bottom chord members and rafters shall be 16 gauge minimum.

2.2 FASTENERS

Framing components shall be fastened to each other by screws or welding as recommended by approved manufacturer.

PART 3 EXECUTION

3.1 FABRICATION

Light gauge steel prefabricated framing shall be fabricated either on or off site prior to erection.

All metal framing shall be erected in accordance with the current printed instructions of the approved subcontractor or his fabricator.

All framing components shall be straight and true prior to fabrication. Flattening or straightening of components shall be done by a process not injurious to materials.

All framing components shall be cut neatly to fit squarely against abutting members.

No splices will be allowed in trusses except at joints.

Provide all angles, clips, and other miscellaneous pieces necessary to attach light gauge framing panels to building structure or to attach other materials to light gauge framing panels.

All components shall be set square in line and shall be held firmly in position until properly fastened.

All panel components shall be joined by screws or welding.

Finished assemblies shall be free from twists, bends, kinks, or open joints with all members straight, square, and true to line.

3.2 ERECTION

Prefabricated framing system components shall be braced against racking. Lifting of components shall be done so as to not cause local distortion in any member.

All light gauge steel framing shall be erected by approved methods using equipment of adequate capacity to safely perform the work.

The Contractor is responsible for checking dimensions and assuring fit of all members and panels before erection begins.

All work shall be erected plumb and level and to dimensions, spacings and elevations indicated on drawings.

Members shall be of size and spacing shown on the approved shop drawings.

Provide web stiffeners and reinforcement at reaction points where required by analysis or to suit details.

Hoist units in place by means of lifting equipment suited to sizes and types of trusses required, applied at designated lift points as recommended by fabricator, exercising care not to damage truss members or joists by out-of-plane end or other causes.

Provide temporary bracing as required to maintain trusses plumb, parallel and in location indicated, until permanent bracing is installed.

Anchor components securely at all bearing points to comply with methods and details indicated.

Install permanent bracing and related components to enable trusses to maintain design spacing, withstand live and dead loads including lateral loads, and to comply with other indicated requirements.

Do not cut or remove frame members.

-- End of Section --

SECTION TABLE OF CONTENTS

DIVISION 05 - METALS

SECTION 05500A

MISCELLANEOUS METAL

01/02

PART 1 GENERAL

1.1 REFERENCES
1.2 SUBMITTALS
1.3 GENERAL REQUIREMENTS
1.4 DISSIMILAR MATERIALS
1.5 WORKMANSHIP
1.6 ANCHORAGE
1.7 ALUMINUM FINISHES
1.8 SHOP PAINTING

PART 2 PRODUCTS

2.1 ACCESS DOORS AND PANELS
2.2 OMITTED
2.3 OMITTED
2.4 OMITTED
2.5 OMITTED
2.6 OMITTED
2.7 PIPE GUARDS (BOLLARDS)
2.8 OMITTED
2.9 OMITTED
2.10 OMITTED
2.11 OMITTED
2.12 OMITTED
2.13 OMITTED
2.14 HANDRAILS
2.14.1 Omitted
2.14.2 Aluminum Handrails
2.15 OMITTED
2.16 LADDERS
2.17 OMITTED
2.18 OMITTED
2.19 MISCELLANEOUS
2.20 OMITTED
2.21 OMITTED
2.22 OMITTED
2.23 OMITTED
2.24 SAFETY NOSING
2.25 SHELVING, WIRE
2.26 STEEL STAIRS
2.27 OMITTED
2.28 OMITTED
2.29 OMITTED
2.30 OMITTED
2.31 OMITTED
2.32 OMITTED
2.33 OMITTED

2.34 FIRE EXTINGUISHER CABINETS
2.35 GATES
2.35.1 Vertical Panels
2.35.2 Frame Members
2.35.3 Posts and Hardware
2.35.3.1 Finishes
2.35.3.2 Design Standard

PART 3 EXECUTION

3.1 GENERAL INSTALLATION REQUIREMENTS
3.2 OMITTED
3.3 OMITTED
3.4 OMITTED
3.5 INSTALLATION OF PIPE GUARDS
3.6 OMITTED
3.7 ATTACHMENT OF HANDRAILS
3.7.1 Omitted
3.7.2 Installation of Aluminum Handrails
3.8 OMITTED
3.9 OMITTED
3.10 OMITTED
3.11 OMITTED
3.12 OMITTED
3.13 INSTALLATION OF SAFETY NOSINGS
3.14 OMITTED
3.15 OMITTED
3.16 OMITTED
3.17 OMITTED
3.18 OMITTED
3.19 OMITTED
3.20 INSTALLATION OF FIRE EXTINGUISHER CABINETS

-- End of Section Table of Contents --

UFGS-05500A (January 2002)

SECTION 05500A

MISCELLANEOUS METAL
01/02

PART 1 GENERAL

1.1 REFERENCES

The publications listed below form a part of this specification to the extent referenced. The publications are referred to in the text by basic designation only.

AMERICAN NATIONAL STANDARDS INSTITUTE (ANSI)

ANSI A14.3	(1992) Ladders - Fixed - Safety Requirements

AMERICAN SOCIETY FOR TESTING AND MATERIALS (ASTM)

ASTM A 53	(2002) Pipe, Steel, Black and Hot-Dipped, Zinc-Coated Welded and Seamless
ASTM A 123/A 123M	(2001) Zinc (Hot-Dip Galvanized) Coatings on Iron and Steel Products
ASTM A 36/A 36M	(2000a) Carbon Structural Steel
ASTM A 446	(1989) Specification for Steel sheet, Zinc Coated (Galvanized) by the Hot-Dip Process, Physical (Structural) Quality Grade A, Fy = 230 MPa (33 ksi): 1.21 mm (18 gauge) and lighter Grade D, Fy = 345 MPa (50 ksi): 1.52 mm (16 gauge) and heavier Grade E, Fy = 550 MPa (80 ksi) Galvanizing: G60 and G90 coating class
ASTM A 53/A 53M	(2001) Pipe, Steel, Black and Hot-Dipped, Zinc-Coated, Welded and Seamless
ASTM A 653/A 653M	(2000) Steel Sheet, Zinc-Coated (Galvanized) or Zinc-Iron Alloy-Coated (Galvannealed) by the Hot-Dip Process
ASTM A 924/A 924M	(1999) General Requirements for Steel Sheet, Metallic-Coated by the Hot-Dip Process
ASTM B 221	(2000) Aluminum and Aluminum-Alloy Extruded Bars, Rods, Wire, Profiles, and Tubes

ASTM B 26/B 26M	(1999) Aluminum-Alloy Sand Castings
ASTM B 429	(2000) Aluminum-Alloy Extruded Structural Pipe and Tube
ASTM E 814	(2000) Fire Tests of Through-Penetration Fire Stops

AMERICAN WELDING SOCIETY (AWS)

AWS D1.1/D1.1M	(2000) Structural Welding Code - Steel

NATIONAL ASSOCIATION OF ARCHITECTURAL METAL MANUFACTURERS (NAAMM)

NAAMM MBG 531	(1994) Metal Bar Grating Manual

NATIONAL FIRE PROTECTION ASSOCIATION (NFPA)

NFPA 10	(1998; Errata 10-98-1) Portable Fire Extinguishers

U.S. GENERAL SERVICES ADMINISTRATION (GSA)

CID A-A-344	(Rev B) Lacquer, Clear Gloss, Exterior, Interior

1.2 SUBMITTALS

Government approval is required for submittals with a "G" designation; submittals not having a "G" designation are for information only. When used, a designation following the "G" designation identifies the office that will review the submittal for the Government. The following shall be submitted in accordance with Section 01330 SUBMITTAL PROCEDURES:

SD-02 Shop Drawings

Miscellaneous Metal Items.

Detail drawings indicating material thickness, type, grade, and class; dimensions; and construction details. Drawings shall include catalog cuts, erection details, manufacturer's descriptive data and installation instructions, and templates. Detail drawings for the following items: stairs, handrails and railing system, ladder, enclosure gates.

1.3 GENERAL REQUIREMENTS

The Contractor shall verify all measurements and shall take all field measurements necessary before fabrication. Welding to or on structural steel shall be in accordance with AWS D1.1/D1.1M. Items specified to be galvanized, when practicable and not indicated otherwise, shall be hot-dip galvanized after fabrication. Galvanizing shall be in accordance with ASTM A 123/A 123M, ASTM A 653/A 653M, or ASTM A 924/A 924M, as applicable. Exposed fastenings shall be compatible materials, shall generally match in color and finish, and shall harmonize with the material to which fastenings are applied. Materials and parts necessary to complete each item, even though such work is not definitely shown or specified, shall be included. Poor matching of holes for fasteners shall be cause for rejection.

Fastenings shall be concealed where practicable. Thickness of metal and details of assembly and supports shall provide strength and stiffness. Joints exposed to the weather shall be formed to exclude water.

1.4 DISSIMILAR MATERIALS

Where dissimilar metals are in contact, or where aluminum is in contact with concrete, mortar, masonry, wet or pressure-treated wood, or absorptive materials subject to wetting, the surfaces shall be protected with a coat of bituminous paint or asphalt varnish.

1.5 WORKMANSHIP

Miscellaneous metalwork shall be well formed to shape and size, with sharp lines and angles and true curves. Drilling and punching shall produce clean true lines and surfaces. Welding shall be continuous along the entire area of contact except where tack welding is permitted. Exposed connections of work in place shall not be tack welded. Exposed welds shall be ground smooth. Exposed surfaces of work in place shall have a smooth finish, and unless otherwise approved, exposed riveting shall be flush. Where tight fits are required, joints shall be milled. Corner joints shall be coped or mitered, well formed, and in true alignment. Work shall be accurately set to established lines and elevations and securely fastened in place. Installation shall be in accordance with manufacturer's installation instructions and approved drawings, cuts, and details.

1.6 ANCHORAGE

Anchorage shall be provided where necessary for fastening miscellaneous metal items securely in place. Anchorage not otherwise specified or indicated shall include slotted inserts made to engage with the anchors, expansion shields, and power-driven fasteners when approved for concrete; toggle bolts and through bolts for masonry; machine and carriage bolts for steel; and lag bolts and screws for wood.

1.7 ALUMINUM FINISHES

Unless otherwise specified, aluminum items shall have hand sanded or machine finish to a 240 grit. Aluminum surfaces to be in contact with plaster or concrete during construction shall be protected with a field coat conforming to CID A-A-344.

1.8 SHOP PAINTING

Surfaces of ferrous metal except galvanized surfaces, shall be cleaned and shop coated with the manufacturer's standard protective coating unless otherwise specified. Surfaces of items to be embedded in concrete shall not be painted. Items to be finish painted shall be prepared according to manufacturer's recommendations or as specified.

PART 2 PRODUCTS

2.1 ACCESS DOORS AND PANELS

Doors and panels shall be flush type unless otherwise indicated. Frames for access doors shall be fabricated of not lighter than 16 gauge steel with welded joints and finished with anchorage for securing into construction. Access doors shall be a minimum of 14 by 20 inches and of not lighter than 14 gauge steel, with stiffened edges, complete with

attachments. Access doors shall have a 1 hour or greater fire rating. Access doors shall be hinged to frame and provided with a flush face, screw driver operated latch. Exposed metal surfaces shall have a shop applied prime coat.

2.2 OMITTED
2.3 OMITTED
2.4 OMITTED
2.5 OMITTED
2.6 OMITTED

2.7 PIPE GUARDS (BOLLARDS)

Pipe guards shall be heavy duty steel pipe conforming to ASTM A 53/A 53M, Type E or S, weight STD, black finish.

2.8 OMITTED
2.9 OMITTED
2.10 OMITTED
2.11 OMITTED
2.12 OMITTED
2.13 OMITTED

2.14 HANDRAILS

Handrails shall be designed to resist a concentrated load of 200 pounds in any direction at any point of the top of the rail or 20 pounds per foot applied horizontally to top of the rail, whichever is more severe. Guardrail infill construction shall withstand a concentrated load of 200 pounds applied at any point within the infill area.

2.14.1 Omitted

2.14.2 Aluminum Handrails

Handrails shall consist of extended structural tubing ASTM B 429 or ASTM B 221 square aluminum and rectangular semi-hollow tube of dimensions indicated with rounded corners ASTM B 221. Railings and pipe collars shall be powder-coated or field-painted aluminum at Contractor's option, color as indicated. All fasteners shall be Series 300 stainless steel.

a. Jointing shall be by one of the following methods:

(1) Flush type rail fittings, welded and ground smooth with splice locks secured with 3/8 inch recessed head setscrews.

(2) Mitered and welded joints, made by fitting post to top rail and intermediate rail to post and corners, shall be groove welded and ground smooth. Splices, where allowed by the Contracting Officer, shall be butted and reinforced by a tight fitting dowel or sleeve not less than 6 inches in length. Dowel or sleeve shall be connected to one side of the splice by tack welding or by using epoxy cement.

(3) Railings shall be assembled using slip-on aluminum-magnesium alloy fittings for joints. Fittings shall be fastened to pipe or tube with 1/4 inch or 3/8 inch stainless steel recessed head setscrews. Assembled railings shall be provided with fittings only at vertical supports or at rail terminations attached to

walls. Expansion joints shall be at the midpoint of panels. A setscrew shall be provided in only one side of the slip-on sleeve. Alloy fittings shall conform to ASTM B 26/B 26M.

b. Removable sections, toe-boards and brackets shall be provided where indicated, using flange castings as appropriate.

2.15 OMITTED

2.16 LADDERS

Ladders shall be galvanized steel or aluminum, fixed rail type in accordance with ANSI A14.3.

2.17 OMITTED
2.18 OMITTED

2.19 MISCELLANEOUS

Miscellaneous plates and shapes for items that do not form a part of the structural steel framework, such as lintels, sill angles, miscellaneous mountings, and frames, shall be provided to complete the work.

2.20 OMITTED
2.21 OMITTED
2.22 OMITTED
2.23 OMITTED

2.24 SAFETY NOSING

Safety nosings shall be of cast aluminum with plain, abrasive surface. Nosing shall be 3 inches wide and terminating at not more than 6 inches from the ends of treads, except nosing for metal pan cement-filled treads shall extend the full length of the tread. Safety nosings shall be provided with anchors not less than 3/4 inch long. Integrally cast mushroom anchors are not acceptable.

2.25 SHELVING, WIRE

Ventilated shelving shall be a complete modular system of epoxy-coated wire shelves, with brackets, clips and anchors as necessary for a complete and functioning installation. Shelf assemblies shall be designed for a load capacity of 110 kg per meter for a nominal deep- shelf.

2.26 STEEL STAIRS

Steel stairs shall be complete with structural or formed channel stringers, metal pan cement-filled treads, landings, columns, handrails, and necessary bolts and other fastenings as indicated. Structural steel shall conform to ASTM A 36/A 36M. Stairs and accessories shall be galvanized. Railing system and handrails shall be aluminum as specified in Paragraph HANDRAILS. Risers on stairs with metal pan treads shall be deformed to form a sanitary cove to retain the tread concrete. Integral nosings shall have braces extended into the concrete fill. Gratings for treads and landings shall conform to NAAMM MBG 531. Grating treads shall have slip-resistant nosings.

2.27 OMITTED
2.28 OMITTED
2.29 OMITTED
2.30 OMITTED
2.31 OMITTED
2.32 OMITTED
2.33 OMITTED

2.34 FIRE EXTINGUISHER CABINETS

Cabinets to be located in fire-rated walls shall be fire-rated type, fabricated in accordance with ASTM E 814, and shall be listed by an approved testing agency for 1- and 2-hour combustible and non-combustible wall systems. The testing agency's seal shall be affixed to each fire-rated cabinet. Cabinets shall be of the semi-recessed type suitable for 10 pound extinguishers. Box and trim shall be of heavy gage rolled steel. Door shall be a rigid frame with full length piano type hinge and double strength (DSA) glass panel. Door and panel shall have the manufacturer's standard white baked enamel finish inside and dark bronze baked enamel finish outside.

2.35 GATES

Gates for mechanical equipment, and dumpster enclosures shall as far as practicable, match the existing gates or nearby buildings. Gates shall be constructed of roll-formed hat-shaped pickets assembled on either side of a horizontal rail system, including diagonal bracing for swing gates.

2.35.1 Vertical Panels

Vertical panels shall be 5 inches wide by 1-1/4 inches deep after forming. Material shall be ASTM A 446 Grade E steel, 0.170 inch thick minimum, hot dip galvanized to G90 Class.

2.35.2 Frame Members

Frame members shall be 0.074 inch thick steel cold-formed channels, 1-1/4 by 1-1/2 inches. Top channel shall be same material as vertical panels.

2.35.3 Posts and Hardware

Posts shall be ASTM A 53 steel pipe, nominal 4 inch diameter, Schedule 40, galvanized, with cast or ductile iron top cap. Hinges shall be manufacturer's standard for size of gate. Each leaf shall be provided with drop rod, configured to accept padlock accessible from outside the enclosure.

2.35.3.1 Finishes

Finishes of all components shall be factory applied 2-coat fluoropolymer, 1.0 mil total thickness. Color shall be as indicated.

2.35.3.2 Design Standard

Gate shall be similar and equivalent to Privacy Panel Gate by ROHN.

PART 3 EXECUTION

3.1 GENERAL INSTALLATION REQUIREMENTS

All items shall be installed at the locations shown and according to the manufacturer's recommendations. Items listed below require additional procedures as specified.

3.2 OMITTED
3.3 OMITTED
3.4 OMITTED

3.5 INSTALLATION OF PIPE GUARDS

Pipe guards shall be set vertically in concrete piers. Piers shall be constructed of, and the hollow cores of the pipe filled with, concrete specified in Section 03300 CAST-IN-PLACE STRUCTURAL CONCRETE.

3.6 OMITTED

3.7 ATTACHMENT OF HANDRAILS

Toeboards and brackets shall be installed where indicated. Splices, where required, shall be made at expansion joints. Removable sections shall be installed as indicated.

3.7.1 Omitted

3.7.2 Installation of Aluminum Handrails

Installation shall be as indicated. Bolts used to anchor aluminum alloy flanges shall be stainless steel of a size appropriate to the standard product of the manufacturer. Where aluminum or alloy fittings or extrusions are to be in contact with dissimilar metals or portland cement concrete, the contact surface shall be given a heavy coating of bituminous paint or asphalt varnish.

3.8 OMITTED
3.9 OMITTED
3.10 OMITTED
3.11 OMITTED
3.12 OMITTED

3.13 INSTALLATION OF SAFETY NOSINGS

Nosing shall be completely embedded in concrete before the initial set of the concrete occurs and shall finish flush with the top of the concrete surface.

3.14 OMITTED
3.15 OMITTED
3.16 OMITTED
3.17 OMITTED
3.18 OMITTED
3.19 OMITTED

3.20 INSTALLATION OF FIRE EXTINGUISHER CABINETS

Metal fire extinguisher cabinets shall be furnished and installed in

accordance with NFPA 10 where shown on the drawings or specified.

-- End of Section --

SECTION TABLE OF CONTENTS

DIVISION 06 - WOOD AND PLASTICS

SECTION 06100A

ROUGH CARPENTRY

02/02

PART 1 GENERAL

1.1 REFERENCES
1.2 SUBMITTALS
1.3 DELIVERY AND STORAGE

PART 2 PRODUCTS

2.1 LUMBER AND SHEATHING
2.1.1 Grading and Marking
2.1.1.1 Lumber Products
2.1.1.2 Omitted
2.1.1.3 Plywood and Other Sheathing Products
2.1.2 Sizes
2.1.3 Treatment
2.1.3.1 Lumber
2.1.3.2 Plywood
2.1.4 Moisture Content
2.1.5 Fire-Retardant Treatment
2.1.6 Omitted
2.1.7 Sheathing
2.1.7.1 Omitted
2.1.7.2 Omitted
2.1.7.3 Plywood
2.1.8 Omitted
2.1.9 Omitted
2.1.10 Omitted
2.1.11 Omitted
2.1.12 Miscellaneous Wood Members
2.1.12.1 Nonstress Graded Members
2.1.12.2 Omitted
2.1.12.3 Omitted
2.1.12.4 Blocking
2.1.12.5 Rough Bucks and Frames
2.2 ACCESSORIES AND NAILS
2.2.1 Anchor Bolts
2.2.2 Bolts: Lag, Toggle, and Miscellaneous Bolts and Screws
2.2.3 Clip Angles
2.2.4 Expansion Shields
2.2.5 Omitted
2.2.6 Omitted
2.2.7 Nails and Staples
2.3 INSULATION
2.3.1 Batt or Blanket
2.3.1.1 Glass Fiber Batts and Rolls
2.3.1.2 Mineral Fiber Batt

2.3.1.3 Mineral Fiber Blanket
2.4 VAPOR RETARDER

PART 3 EXECUTION

3.1 OMITTED
3.2 INSTALLATION OF SHEATHING
3.2.1 Omitted
3.2.2 Omitted
3.2.3 Plywood
3.3 OMITTED
3.4 OMITTED
3.5 OMITTED
3.6 INSTALLATION OF MISCELLANEOUS WOOD MEMBERS
3.6.1 Omitted
3.6.2 Omitted
3.6.3 Blocking
3.6.4 Nailers and Nailing Strips
3.6.5 Wood Grounds
3.6.6 Furring Strips
3.6.7 Rough Bucks and Frames
3.7 OMITTED
3.8 INSTALLATION OF INSULATION
3.9 INSTALLATION OF VAPOR RETARDER
3.10 OMITTED
3.11 OMITTED
3.12 TABLES

-- End of Section Table of Contents --

SECTION 06100A

ROUGH CARPENTRY
02/02

PART 1 GENERAL

1.1 REFERENCES

The publications listed below form a part of this specification to the extent referenced. The publications are referred to in the text by basic designation only.

AMERICAN FOREST & PAPER ASSOCIATION (AF&PA)

AF&PA T101	(1991; Supple 1993; Addenda Apr 1997; Supple T02) National Design Specification for Wood Construction
AF&PA T11	(1988) Manual for Wood Frame Construction **

AMERICAN INSTITUTE OF TIMBER CONSTRUCTION (AITC)

AITC 111	(1979) Recommended Practice for Protection of Structural Glued Laminated Timber During Transit, Storage and Erection

AMERICAN SOCIETY FOR TESTING AND MATERIALS (ASTM)

ASTM A 307	(2000) Carbon Steel Bolts and Studs, 60 000 PSI Tensile Strength
ASTM C 1136	(1995) Flexible, Low Permeance Vapor Retarders for Thermal Insulation
ASTM C 518	(1998) Steady-State Heat Flux Measurements and Thermal Transmission Properties by Means of the Heat Flow Meter Apparatus
ASTM C 553	(1999) Mineral Fiber Blanket Thermal Insulation for Commercial and Industrial Applications
ASTM C 665	(1998) Mineral-Fiber Blanket Thermal Insulation for Light Frame Construction and Manufactured Housing
ASTM D 2898	(1994; R 1999) Accelerated Weathering of Fire-Retardant-Treated Wood for Fire Testing
ASTM E 154	(1988; R 1999) Water Vapor Retarders Used in Contact with Earth Under Concrete Slabs, on Walls, or as Ground Cover

ASTM E 96	(2000) Water Vapor Transmission of Materials
ASTM F 547	(1977; R 1995) Definitions of Terms Relating to Nails for Use with Wood and Wood-Based Materials

AMERICAN WOOD-PRESERVERS' ASSOCIATION (AWPA)

AWPA C2	(2000) Lumber, Timber, Bridge Ties and Mine Ties - Preservative Treatment by Pressure Processes
AWPA C20	(1999) Structural Lumber Fire-Retardant Pressure Treatment
AWPA C27	(1999) Plywood - Fire-Retardant Pressure Treatment
AWPA C9	(1997) Plywood - Preservative Treatment by Pressure Processes
AWPA M4	(1999) Standard for the Care of Preservative-Treated Wood Products
AWPA P5	(2000) Standards for Waterborne Preservatives

APA - THE ENGINEERED WOOD ASSOCIATION (APA)

APA EWS R540C	(1996) Builder Tips Proper Storage and Handling of Glulam Beams
APA E445R	(1980; Rev Jan 1996) Performance Standards and Policies for Structural-Use Panels

FACTORY MUTUAL ENGINEERING AND RESEARCH (FM)

FM LPDS 1-49	(1995) Loss Prevention Data Sheet - Perimeter Flashing

NATIONAL HARDWOOD LUMBER ASSOCIATION (NHLA)

NHLA Rules	(1994) Rules for the Measurement & Inspection of Hardwood & Cypress

NORTHEASTERN LUMBER MANUFACTURERS ASSOCIATION (NELMA)

NELMA Grading Rules	(1997) Standard Grading Rules for Northeastern Lumber

REDWOOD INSPECTION SERVICE (RIS)

RIS Grade Use	(1997) Grades of California Redwood Lumber

SOUTHERN CYPRESS MANUFACTURERS ASSOCIATION (SCMA)

SCMA Spec	(1986; Supple No. 1, Aug 1993) Standard Specifications for Grades of Southern

Cypress

SOUTHERN PINE INSPECTION BUREAU (SPIB)

SPIB 1003	(1994; Supple 8 thru 11) Standard Grading Rules for Southern Pine Lumber

U.S. DEPARTMENT OF COMMERCE (DOC)

PS1	(1995) Construction and Industrial Plywood
PS2	(1993) Wood-Base Structural-Use Panels

WEST COAST LUMBER INSPECTION BUREAU (WCLIB)

WCLIB 17	(1996; Supp. VII & VIII) Standard Grading and Dressing Rules for Douglas Fir, Western Hemlock, Western Red Cedar, White Fir, Sitka Spruce Lumber

WESTERN WOOD PRODUCTS ASSOCIATION (WWPA)

WWPA Grading Rules	(1999) Western Lumber Grading Rules 95

1.2 SUBMITTALS

Government approval is required for submittals with a "G" designation; submittals not having a "G" designation are for information only. When used, a designation following the "G" designation identifies the office that will review the submittal for the Government. The following shall be submitted in accordance with Section 01330 SUBMITTAL PROCEDURES:

SD-07 Certificates

Grading and Marking

Manufacturer's certificates (approved by an American Lumber Standards approved agency) attesting that lumber and material not normally grade marked meet the specified requirements. Certificate of Inspection for grade marked material by an American Lumber Standards Committee (ALSC) recognized inspection agency prior to shipment.

Insulation

Certificate attesting that the cellulose, perlite, glass and mineral fiber,glass mat gypsum roof board, polyurethane, or polyisocyanurate insulation furnished for the project contains recovered material, and showing an estimated percent of such recovered material.

1.3 DELIVERY AND STORAGE

Materials shall be delivered to the site in undamaged condition, stored off ground in fully covered, well ventilated areas, and protected from extreme changes in temperature and humidity. Laminated timber shall be handled and stored in accordance with AITC 111 or APA EWS R540C.

PART 2 PRODUCTS

2.1 LUMBER AND SHEATHING

2.1.1 Grading and Marking

2.1.1.1 Lumber Products

Solid sawn and finger-jointed lumber shall bear an authorized gradestamp or grademark recognized by ALSC, or an ALSC recognized certification stamp, mark, or hammerbrand. Surfaces that are to be exposed to view shall not bear grademarks, stamps, or any type of identifying mark. Hammer marking will be permitted on timbers when all surfaces will be exposed to view.

2.1.1.2 Omitted

2.1.1.3 Plywood and Other Sheathing Products

Materials shall bear the grademark or other identifying marks indicating grades of material and rules or standards under which produced, including requirements for qualifications and authority of the inspection organization. Except for plywood and wood structural panels, bundle marking will be permitted in lieu of marking each individual piece. Surfaces that are to be exposed to view shall not bear grademarks or other types of identifying marks.

2.1.2 Sizes

Lumber and material sizes shall conform to requirements of the rules or standards under which produced. Unless otherwise specified, lumber shall be surfaced on four sides. Unless otherwise specified, sizes indicated are nominal sizes, and actual sizes shall be within manufacturing tolerances allowed by the standard under which the product is produced.

2.1.3 Treatment

Exposed areas of treated wood that are cut or drilled after treatment shall receive a field treatment in accordance with AWPA M4. Items of all-heart material of cedar, cypress, or redwood will not require preservative treatment, except when in direct contact with soil. Except as specified for all-heart material of the previously mentioned species, the following items shall be treated:

a. Wood members in contact with or within 18 inches of soil.

b. Wood members in contact with water.

c. Wood members exposed to the weather and those used in roofing systems or as nailing strips or nailers over fiberboard or gypsum-board wall sheathing as a base for wood siding.

d. Wood members set into concrete regardless of location, including flush-with-deck wood nailers for roofs.

e. Wood members in contact with concrete that is in contact with soil or water or that is exposed to weather.

2.1.3.1 Lumber

Lumber shall be treated in accordance with AWPA C2 with waterborne preservatives listed in AWPA P5 to a retention level as follows:

a. 0.25 pcf intended for above ground use.

b. 0.40 pcf intended for ground contact and fresh water use.

2.1.3.2 Plywood

Plywood shall be treated in accordance with AWPA C9 with waterborne preservatives listed in AWPA P5 to a retention level as follows:

a. 0.25 pcf intended for above ground use.

b. 0.40 pcf intended for ground contact and fresh water use.

2.1.4 Moisture Content

At the time lumber and other materials are delivered and when installed in the work their moisture content shall be as follows:

a. Treated and Untreated Lumber: 4 inches or less, nominal thickness, 19 percent maximum. 5 inches or more, nominal thickness, 23 percent maximum in a 3 inch perimeter of the timber cross-section.

b. Materials Other Than Lumber: In accordance with standard under which product is produced.

2.1.5 Fire-Retardant Treatment

Fire-retardant treated wood shall be pressure treated in accordance with AWPA C20 for lumber and AWPA C27 for plywood. Material use shall be defined in AWPA C20 and AWPA C27 for Interior Type A and B and Exterior Type. Treatment and performance inspection shall be by an independent and qualified testing agency that establishes performance ratings. Each piece or bundle of treated material shall bear identification of the testing agency to indicate performance in accordance with such rating. Treated materials to be exposed to rain wetting shall be subjected to an accelerated weathering technique in accordance with ASTM D 2898 prior to being tested for compliance with AWPA C20 or AWPA C27. Items to be treated include shall be as indicated on the drawings.

2.1.6 Omitted

2.1.7 Sheathing

Sheathing shall be plywood.

2.1.7.1 Omitted
2.1.7.2 Omitted

2.1.7.3 Plywood

Plywood shall conform to PS1, APA E445R or PS2, Grade C-D or sheathing grade with exterior glue. Sheathing for roof and walls without corner bracing of framing shall have a span rating of 16/0 or greater for supports 16 inches on center and a span rating of 24/0 or greater for supports 24

inches on center.

2.1.8 Omitted
2.1.9 Omitted
2.1.10 Omitted
2.1.11 Omitted
2.1.12 Miscellaneous Wood Members

2.1.12.1 Nonstress Graded Members

Members shall include bridging, corner bracing, furring, grounds, and nailing strips. Members shall be in accordance with TABLE I for the species used. Sizes shall be as follows unless otherwise shown:

Member	Size (inch)
Bridging	1 x 3 or 1 x 4 for use between members 2 x 12 and smaller; 2 x 4 for use between members larger than 2 x 12.
Corner bracing	1 x 4.
Furring	1 x .
Grounds	Plaster thickness by 1-1/2.
Nailing strips	1 x 3 or 1 x 4 when used as shingle base or interior finish, otherwise 2 inch stock.

2.1.12.2 Omitted
2.1.12.3 Omitted

2.1.12.4 Blocking

Blocking shall be standard or number 2 grade.

2.1.12.5 Rough Bucks and Frames

Rough bucks and frames shall be straight standard or number 2 grade.

2.2 ACCESSORIES AND NAILS

Markings shall identify both the strength grade and the manufacturer. Accessories and nails shall conform to the following:

2.2.1 Anchor Bolts

ASTM A 307, size as indicated, complete with nuts and washers.

2.2.2 Bolts: Lag, Toggle, and Miscellaneous Bolts and Screws

Type, size, and finish best suited for intended use. Finish options include zinc compounds, cadmium, and aluminum paint impregnated finishes.

2.2.3 Clip Angles

Steel, 3/16 inch thick, size best suited for intended use; or zinc-coated

steel or iron commercial clips designed for connecting wood members.

2.2.4 Expansion Shields

Type and size best suited for intended use.

2.2.5 Omitted
2.2.6 Omitted

2.2.7 Nails and Staples

ASTM F 547, size and type best suited for purpose; staples shall be as recommended by the manufacturer of the materials to be joined. For sheathing and subflooring, length of nails shall be sufficient to extend 1 inch into supports. In general, 8-penny or larger nails shall be used for nailing through 1 inch thick lumber and for toe nailing 2 inch thick lumber; 16-penny or larger nails shall be used for nailing through 2 inch thick lumber. Nails used with treated lumber and sheathing shall be galvanized. Nailing shall be in accordance with the recommended nailing schedule contained in AF&PA T11. Where detailed nailing requirements are not specified, nail size and spacing shall be sufficient to develop an adequate strength for the connection. The connection's strength shall be verified against the nail capacity tables in AF&PA T101. Reasonable judgment backed by experience shall ensure that the designed connection will not cause the wood to split. If a load situation exceeds a reasonable limit for nails, a specialized connector shall be used.

2.3 INSULATION

Thermal resistance of insulation shall be not less than the R-values shown. R-values shall be determined at 75 degrees F in accordance with ASTM C 518. Insulation shall contain the highest practicable percentage of recovered material which has been recovered or diverted from solid waste, but not including material reused in a manufacturing process. Where two materials have the same price and performance, the one containing the higher recovered material content shall be provided. Insulation shall be the standard product of a manufacturer and factory marked or identified with manufacturer's name or trademark and R-value. Identification shall be on individual pieces or individual packages. Materials containing more than one percent asbestos will not be allowed.

2.3.1 Batt or Blanket

2.3.1.1 Glass Fiber Batts and Rolls

Glass fiber batts and rolls shall conform to ASTM C 665, Type II kraft faced insulation. Insulation shall have a 10 mil thick, white, puncture resistant woven-glass cloth with vinyl facing on one side. Width and length shall suit construction conditions.

2.3.1.2 Mineral Fiber Batt

Mineral fiber batt shall conform to ASTM C 665, Type II kraft faced insulation, Class C.

2.3.1.3 Mineral Fiber Blanket

Mineral fiber blanket shall conform to ASTM C 553, Type I, Class 6. Blankets shall be sized to suit construction conditions, resilient type for

use below and above ambient temperature to 350 degrees F. Blankets shall have a factory applied vapor-barrier facing on one side with 2 inch nailing tabs on both edges. Vapor barriers shall be fire retardant, high vapor transmission, and aluminum foil laminated to crepe paper type conforming to ASTM C 1136, Type II. Nominal density shall be 0.75 pcf.

2.4 VAPOR RETARDER

Vapor retarder shall be polyethylene sheeting conforming to ASTM E 154 or other equivalent material. Vapor retarder shall have a maximum vapor permeance rating of 0.5 perms as determined in accordance with ASTM E 96, unless otherwise specified.

PART 3 EXECUTION

3.1 OMITTED

3.2 INSTALLATION OF SHEATHING

3.2.1 Omitted
3.2.2 Omitted

3.2.3 Plywood

Sheathing shall be applied with edges 1/8 inch apart at side and end joints, and nailed at supported edges at 6 inches on center and at intermediate supports 12 inches on center unless otherwise shown. Nailing of edges shall be 3/8 inch from the edges. Wall sheathing shall extend over top and bottom plates, and if applied horizontally the vertical joints shall be made over supports and staggered. Roof sheathing shall be applied with long dimension at right angles to supports, end joints made over supports, and end joints staggered.

3.3 OMITTED
3.4 OMITTED
3.5 OMITTED

3.6 INSTALLATION OF MISCELLANEOUS WOOD MEMBERS

3.6.1 Omitted
3.6.2 Omitted

3.6.3 Blocking

Blocking shall be provided as necessary for application of siding, sheathing, subflooring, wallboard, and other materials or building items, and to provide firestopping. Blocking for firestopping shall ensure a maximum dimension of 8 feet for any concealed space. Blocking shall be cut to fit between framing members and rigidly nailed thereto.

3.6.4 Nailers and Nailing Strips

Nailers and nailing strips shall be provided as necessary for the attachment of finish materials. Nailers used in conjunction with roof deck installation shall be installed flush with the roof deck system. Stacked nailers shall be assembled with spikes or nails spaced not more than 18 inches on center and staggered. Beginning and ending nails shall not be more than 6 inches for nailer end. Ends of stacked nailers shall be offset approximately 12 inches in long runs and alternated at corners.

Anchors shall extend through the entire thickness of the nailer. Strips shall be run in lengths as long as practicable, butt jointed, cut into wood framing members when necessary, and rigidly secured in place. Nailers and nailer installation for Factory Mutual wind uplift rated roof systems specified in other Sections of these specifications shall conform to the recommendations contained in FM LPDS 1-49.

3.6.5 Wood Grounds

Wood grounds shall be provided as necessary for attachment of trim, finish, and other work to plaster. Grounds shall be run in lengths as long as practicable, butt jointed, and rigidly secured in place.

3.6.6 Furring Strips

Furring strips shall be provided at the locations shown. Furring strips shall be installed at 16 inches on center unless otherwise shown, run in lengths as long as practicable, butt jointed and rigidly secured in place.

3.6.7 Rough Bucks and Frames

Rough bucks shall be set straight, true, and plumb, and secured with anchors near top and bottom of each wood member and at intermediate intervals of not more than 3 feet. Anchors for concrete shall be expansion bolts, and anchors for masonry shall be 3/16 x 1-1/4 inch steel straps extending not less than 8 inches into the masonry and turned down 2 inches into the masonry.

3.7 OMITTED

3.8 INSTALLATION OF INSULATION

Insulation shall be installed after construction has advanced to a point that the installed insulation will not be damaged by remaining work. For thermal insulation the actual installed thickness shall provide the thermal resistance R-values shown. For acoustical insulation the installed thickness shall be as shown. Insulation shall be installed on the weather side of such items as electrical boxes and water lines. Unless otherwise specified, installation shall be in accordance with the manufacturer's recommendation.

3.9 INSTALLATION OF VAPOR RETARDER

Vapor retarder shall be applied to provide a continuous barrier at window and door frames, and at all penetrations such as electrical outlets and switches, plumbing connections, and utility service penetrations. Joints in the vapor retarder shall be lapped and sealed according to the manufacturer's recommendations.

3.10 OMITTED
3.11 OMITTED

3.12 TABLES

TABLE I. SPECIES AND GRADE

Subflooring, Roof Sheathing, Wall Sheathing, Furring

Grading Rules	Species	Const Standard	No. 2 Comm	No. 2 Board Comm	No. 3 Comm
NHLA Rules					
	Cypress			X	
NELMA Grading Rules					
	Northern White Cedar				X
	Eastern White Pine	X			
	Northern Pine	X			
	Balsam Fir				X
	Eastern Hemlock-Tamarack				X
RIS Grade Use					
	Redwood		X		
SCMA Spec					
	Cypress			X	
SPIB 1003					
	Southern Pine		X		
WCLIB 17					
	Douglas Fir-Larch	X			
	Hem-Fir	X			
	Sitka Spruce	X			
	Mountain Hemlock	X			
	Western Cedar	X			
WWPA Grading Rules					
	Douglas Fir-Larch	X			
	Hem-Fir	X			
	Idaho White Pine	X			
	Lodgepole Pine			X	
	Ponderosa Pine			X	
	Sugar Pine			X	
	Englemann Spruce			X	
	Douglas Fir South			X	
	Mountain Hemlock			X	
	Subalpine Fir			X	
	Western Cedar			X	

-- End of Section --

SECTION TABLE OF CONTENTS

DIVISION 06 - WOOD AND PLASTICS

SECTION 06200A

FINISH CARPENTRY

11/01

PART 1 GENERAL

1.1 REFERENCES
1.2 SUBMITTALS
1.3 DELIVERY AND STORAGE

PART 2 PRODUCTS

2.1 WOOD ITEMS AND TRIM
2.1.1 Grading and Marking
2.1.2 Sizes and Patterns
2.1.3 Moisture Content
2.1.4 Preservative Treatment
2.1.4.1 Omitted
2.1.4.2 Exterior Wood Molding and Millwork
2.1.5 Omitted
2.1.6 Omitted
2.1.7 Omitted
2.1.8 Omitted
2.1.9 Fascias and Trim
2.1.9.1 Wood
2.1.10 Moldings
2.1.11 Omitted
2.1.12 Woodwork Items
2.1.12.1 Omitted
2.1.12.2 Omitted
2.1.12.3 Utility Shelving
2.2 NAILS

PART 3 EXECUTION

3.1 OMITTED
3.2 OMITTED
3.3 FASCIAS AND EXTERIOR TRIM
3.4 MOLDING AND INTERIOR TRIM
3.5 OMITTED
3.6 OMITTED
3.7 WOODWORK ITEMS
3.7.1 Omitted
3.7.2 Shelving
3.8 TABLES

-- End of Section Table of Contents --

UFGS-06200A (November 2001)

SECTION 06200A

FINISH CARPENTRY
11/01

PART 1 GENERAL

1.1 REFERENCES

The publications listed below form a part of this specification to the extent referenced. The publications are referred to in the text by basic designation only.

AMERICAN SOCIETY FOR TESTING AND MATERIALS (ASTM)

ASTM F 547	(1977; R 1995) Definitions of Terms Relating to Nails for Use with Wood and Wood-Based Materials

AMERICAN WOOD-PRESERVERS' ASSOCIATION (AWPA)

AWPA M4	(1999) Standard for the Care of Preservative-Treated Wood Products

SOUTHERN PINE INSPECTION BUREAU (SPIB)

SPIB 1003	(1994; Supple 8 thru 11) Standard Grading Rules for Southern Pine Lumber

WEST COAST LUMBER INSPECTION BUREAU (WCLIB)

WCLIB 17	(1996; Supples VII(A-E), VIII(A-C)) Grading Rules for West Coast Lumber

WESTERN WOOD PRODUCTS ASSOCIATION (WWPA)

WWPA Grading Rules	(1999) Western Lumber Grading Rules 95

WOOD MOULDING AND MILLWORK PRODUCERS ASSOCIATION (WMMPA)

WMMPA WM 6	(1987) Industry Standard for Non-Pressure Treating of Wood Millwork

1.2 SUBMITTALS

Government approval is required for submittals with a "G" designation; submittals not having a "G" designation are for information only. When used, a designation following the "G" designation identifies the office that will review the submittal for the Government. The following shall be submitted in accordance with Section 01330 SUBMITTAL PROCEDURES:

SD-02 Shop Drawings

Finish Carpentry

Drawings showing fabricated items and special mill and woodwork items. Drawings shall indicate materials and details of construction, methods of fastening, erection, and installation.

SD-03 Product Data

Wood Items, and Trim

Manufacturer's printed data indicating the usage of engineered or recycled wood products, and environmentally safe preservatives.

SD-04 Samples

Moldings
Fascias and Trim

Samples shall be of sufficient size to show patterns, color ranges, and types, as applicable, of the material proposed to be used.

1.3 DELIVERY AND STORAGE

Materials shall be delivered to the site in undamaged condition, stored off ground in fully covered, well-ventilated areas, and protected from extreme changes in temperature and humidity.

PART 2 PRODUCTS

2.1 WOOD ITEMS AND TRIM

The Contractor shall furnish products which optimize design by reducing the amount of wood used (engineered wood), by using recycled wood products and preservatives without arsenic or chromium when the products and methods are competitive in price or directed by the Contracting Officer. The Contractor shall comply with EPA requirements in accordance with Section 01670 RECYCLED / RECOVERED MATERIALS.

2.1.1 Grading and Marking

Materials shall bear the grademark, stamp or other identifying marks indicating grades of material and rules or standards under which produced. Such identifying marks on a material shall be in accordance with the rule or standard under which the material is produced, including requirements for qualifications and authority of the inspection organization, usage of authorized identification, and information included in the identification. The inspection agency for lumber shall be certified by the Board of Review, American Lumber Standards Committee, to grade the species used. Except for plywood, wood structural panels, and lumber, bundle marking will be permitted in lieu of marking each individual piece. Surfaces that are to be architecturally exposed to view shall not bear grademarks, stamps, or other types of identifying marks.

2.1.2 Sizes and Patterns

Lumber sizes and patterns shall conform to rules or standards under which produced. Unless otherwise specified, lumber shall be surfaced on four sides. Sizes and patterns for materials other than lumber shall conform to requirements of the rules or standards under which produced. Size references, unless otherwise specified, are nominal sizes, and actual sizes

shall be within manufacturing tolerances allowed by the standard under which the product is produced.

2.1.3 Moisture Content

The maximum moisture content of untreated trim and wood siding shall be 15 percent at the time of delivery to the jobsite and when installed. Moisture content of all other material shall be in accordance with the standard under which the product is produced.

2.1.4 Preservative Treatment

2.1.4.1 Omitted

2.1.4.2 Exterior Wood Molding and Millwork

Exterior wood molding and millwork within 18 inches of soil, in contact with water or concrete shall be preservative-treated in accordance with WMMPA WM 6. Exposed areas of treated wood that are cut or drilled after treatment shall receive a field treatment in accordance with AWPA M4. Items of all-heart material of cedar, cypress, or redwood will not require preservative treatment, except when in direct contact with soil.

2.1.5 Omitted

2.1.6 Omitted
2.1.7 Omitted
2.1.8 Omitted

2.1.9 Fascias and Trim

2.1.9.1 Wood

Fascias and trim shall be species and grade listed in TABLE I at the end of this section. Sizes shall be as indicated. Metal corners may be furnished in lieu of wood cornerboards for horizontal siding; and if furnished, shall be galvanized steel and primed or aluminum and primed.

2.1.10 Moldings

Moldings shall be of the pattern indicated and shall be of a grade compatible with the finish specified.

2.1.11 Omitted

2.1.12 Woodwork Items

2.1.12.1 Omitted
2.1.12.2 Omitted

2.1.12.3 Utility Shelving

Utility shelving shall be a suitable species equal to or exceeding requirements of No. 3 Common white fir under WWPA Grading Rules, 1 inch thick; or plywood, interior type, Grade A-B, 1/2 inch thick, any species group. Wire shelving is specified in Section 05500AMISCELLANEOUS METAL.

2.2 NAILS

Nails shall be the size and type best suited for the purpose and shall conform to ASTM F 547. Nails shall be hot-dip galvanized or aluminum when used on exterior work. For siding, length of nails shall be sufficient to extend 1-1/2 inches into supports, including wood sheathing over framing. Screws for use where nailing is impractical shall be size best suited for purpose.

PART 3 EXECUTION

3.1 OMITTED
3.2 OMITTED

3.3 FASCIAS AND EXTERIOR TRIM

Exposed surfaces and square edges shall be machine sanded, caulked, and constructed to exclude water. Joints of built-up items, in addition to nailing, shall be glued as necessary for weather-resistant construction. End joints in built-up members shall be well distributed. Joints in flat work shall be shouldered. Backs of wide-faced miters shall be held together with metal rings and glue. Fascias and other flat members shall be in maximum practicable lengths. Cornices shall be braced, blocked, and rigidly anchored for support and protection of vertical joints.

3.4 MOLDING AND INTERIOR TRIM

Molding and interior trim shall be installed straight, plumb, level and with closely fitted joints. Exposed surfaces shall be machine sanded at the mill. Molded work shall be coped at returns and interior angles and mitered at external corners. Intersections of flatwork shall be shouldered to ease any inherent changes in plane. Window and door trim shall be provided in single lengths. Blind nailing shall be used to the extent practicable, and face nailing shall be set and stopped with a nonstaining putty to match the finish applied. Screws shall be used for attachment to metal; setting and stopping of screws shall be of the same quality as required where nails are used.

3.5 OMITTED
3.6 OMITTED

3.7 WOODWORK ITEMS

3.7.1 Omitted

3.7.2 Shelving

Shelving shall be anchored to supporting construction. Unless otherwise indicated, shelves shall be supported by wall-supported brackets not more than 24 inches on center or as required to limit deflection to 1/4 inch between supports with a load of 35 lb per lineal foot. Adjustable shelf hardware shall be steel standards, channel shaped, with 1 inch adjustment slots and brackets designed for attachment to standards.

3.8 TABLES

TABLE I. SPECIES AND GRADE TABLES

Grading Rules	Species	Choice	Clear	C Select	C & Better
SPIB 1003	Southern Pine				X
WCLIB 17	Douglas Fir			X	
	Larch				X
	Hemlock Fir				X
	Mountain Hemlock				X
	Sitka Spruce				X
WWPA Grading Rules					
	Douglas Fir				X
	Larch				X
	Hemlock Fir		X		
	Mountain Hemlock				X
	Western Larch		X		
	Idaho White Pine	X			
	Lodgepole Pine		X		
	Ponderosa Pine		X		
	Sugar Pine		X		
	Englemann Spruce		X		
	Douglas Fir South		X		
	Subalpine Fir		X		

NOTE 1: Western Cedar under WCLIB 17 shall be Grade B; and under WWPA Grading Rules, Western Cedar shall be Grade B bevel for siding and Grade A for trim.

NOTE 2: Except as specified in NOTE 3 below, exterior trim shall be any of the species listed above. Interior trim shall be any one of the species listed above and the highest grade of the species for stain or natural finish and one grade below highest grade of species for paint finish.

NOTE 3: Southern Yellow Pine, Douglas Fir, Larch, Western Larch, and Tamarack shall not be used where painting is required and may be used on exterior work only when approved and stained with a preservative type stain.

-- End of Section --