HARTWELL DAM PROJECT

SAVANNAH RIVER, GEORGIA AND SOUTH CAROLINA

GOVERNOR RETROFIT

US Army Corps of Engineers
Savannah District

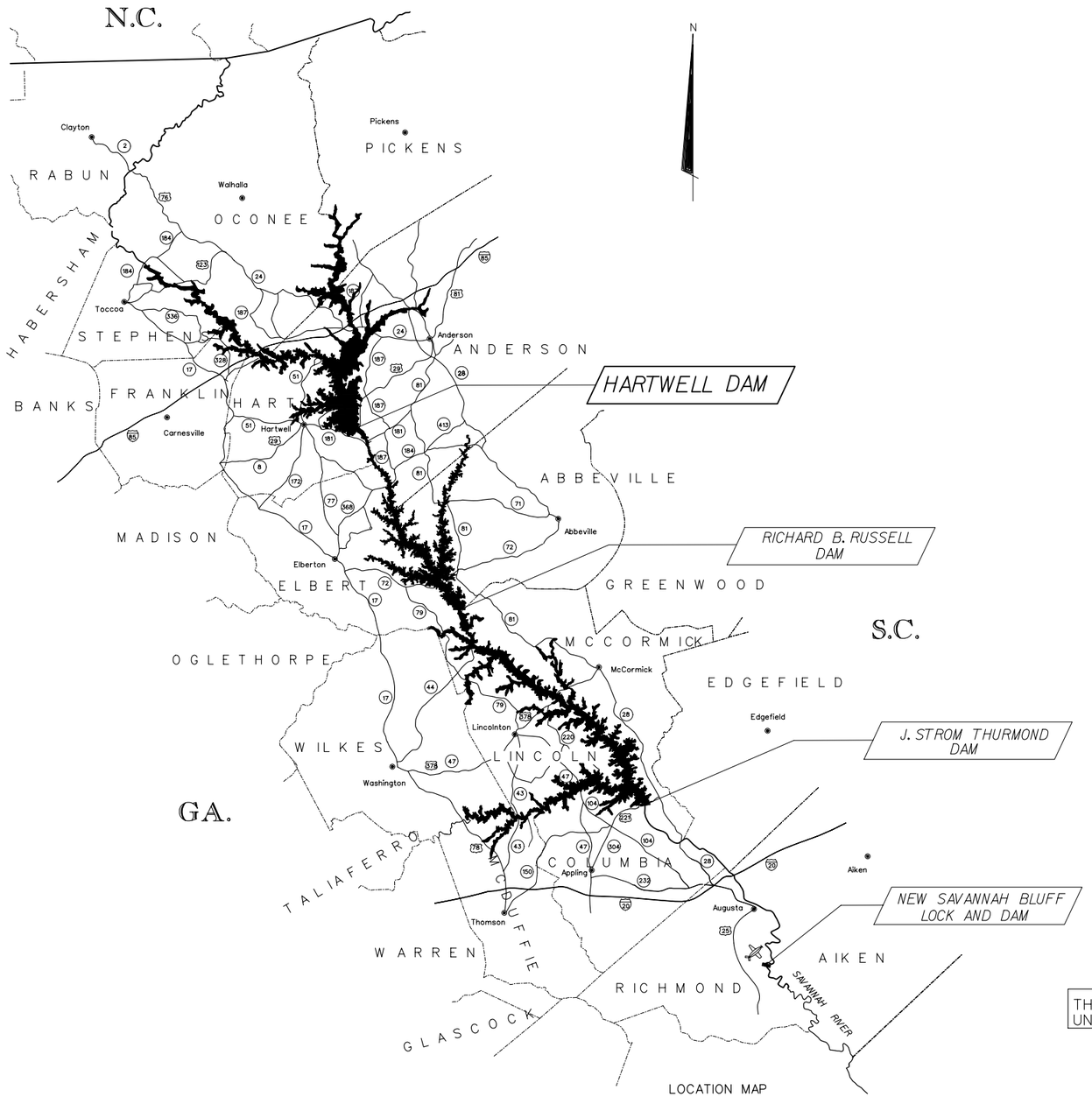

LOCATION MAP
NOT TO SCALE

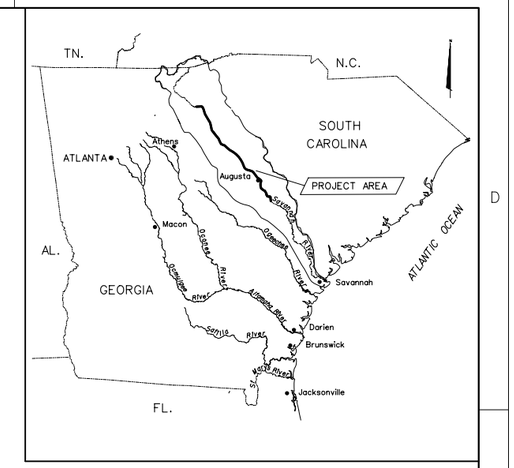

VICINITY MAP
NOT TO SCALE

REFERENCE DRAWINGS:

DWG. NO.	SHEET NO.	TITLE
505600		LOCATION AND VICINITY MAP
505601		UNIT 1-4 GENERATOR AND TURBINE CONTROLS
505602		UNIT 1-4 GENERATOR PROT. & AUX

WOODWARD GOVERNOR CO.

971147-K	1	WIRING DIAGRAM
982594-F	1	ACTUATOR ARRANGEMENT
982594-F	2	ACTUATOR ARRANGEMENT

THIS SHEET ADDED FOR INFORMATION ONLY
UNDER SOLICITATION NO. DACW21-02

DESCRIPTION
REVISIONS

HYDROELECTRIC DESIGN CENTER
NORTH PACIFIC DIV., PORTLAND, OR

U.S. ARMY ENGINEER DISTRICT
CORPS OF ENGINEERS
SAVANNAH, GEORGIA

POWER PLANT
UNIT 1-4
GENERATOR AND TURBINE CONTROLS

LOCATION AND VICINTY MAP

HARTWELL DAM AND LAKE MAJOR REHAB
SAVANNAH RIVER GEORGIA AND S. CAROLINA

SIZE	SOLICITATION NO.	FILE NO.	PLATE
F		HWP-5.5-6-0/0	X-1
SCALE:			SHEET 01

FILE NAME: 505600.dgn

HWP-901600.DGN
HWP901-TB.DGN

8 MAY 2002

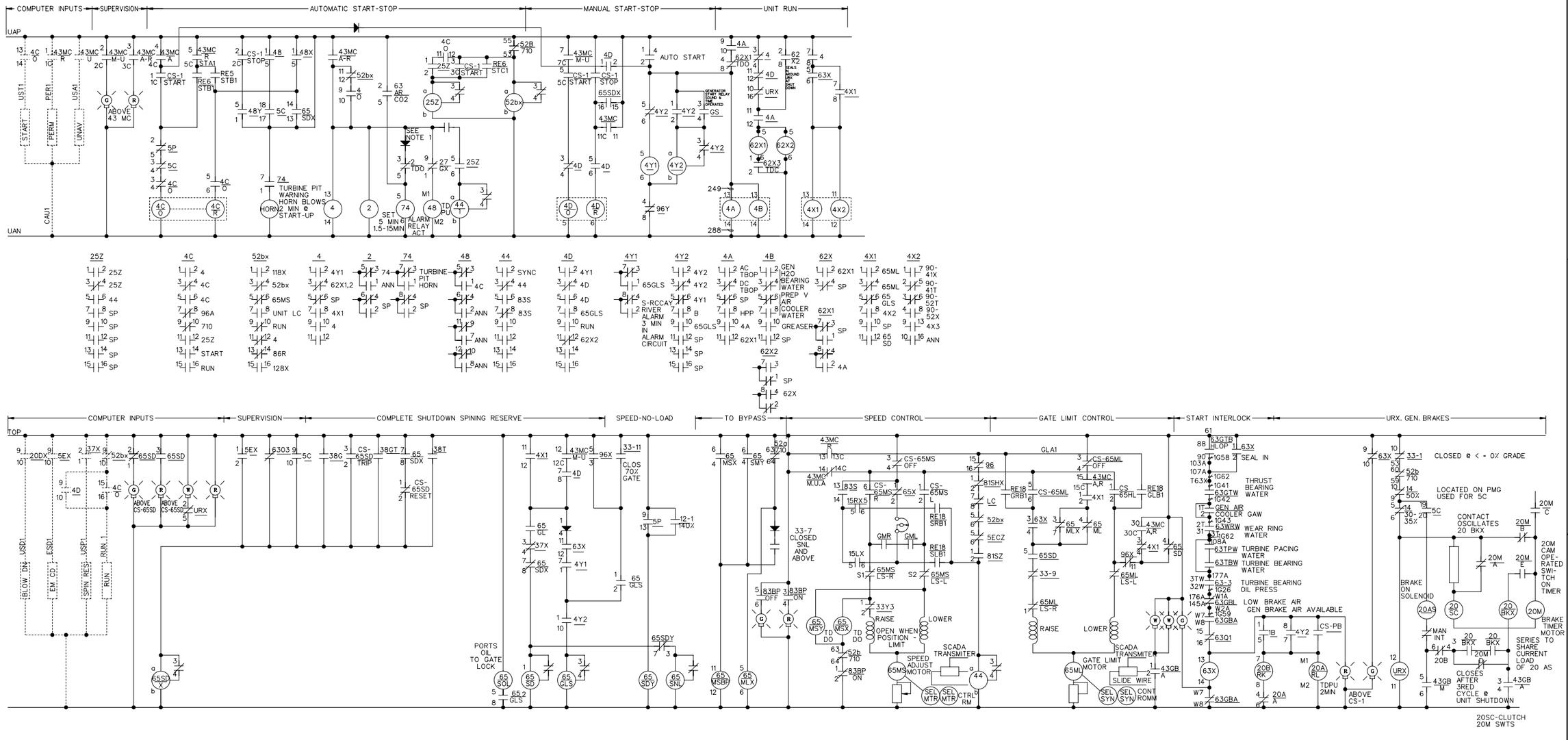

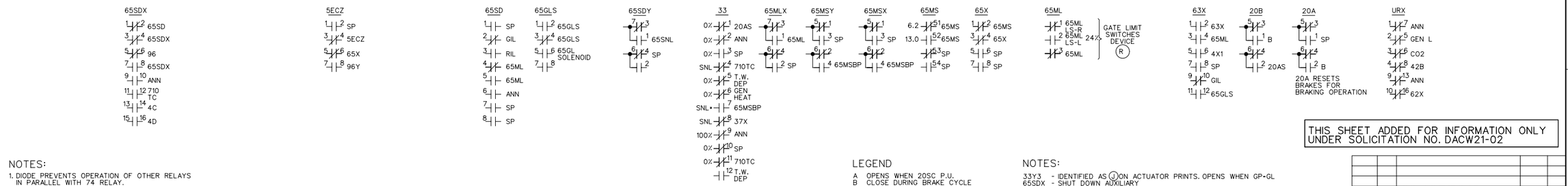

THIS SHEET ADDED FOR INFORMATION ONLY UNDER SOLICITATION NO. DACW21-02

NOTES:

1. DIODE PREVENTS OPERATION OF OTHER RELAYS IN PARALLEL WITH 74 RELAY.
2. CIRCUITS SHOWN IN DASHED LINE ARE STILL EXISTING BUT NOT USED.

TURBINE AND GOVERNOR CONTROLS

LEGEND

A OPENS WHEN 20SC P.U.
B CLOSE DURING BRAKE CYCLE
C SP
D CLOSE ON TIME OUT
E OSC
O GOV OIL SUMP
• TERMINAL BOX A
A ACT
T TURBINE TERMINAL BOX
T TERMINAL BOX NO. 1

NOTES:

33Y3 - IDENTIFIED AS (J) ON ACTUATOR PRINTS. OPENS WHEN GP-GL
65SDX - SHUT DOWN AUXILIARY
37X - UNDER CURRENT OR UNDERPOWER RELAY
96 - SPINNING RESERVE
96X - SPINNING RESERVE AUXILIARY RELAY
96Y - SPINNING RESERVE AUXILIARY RELAY
5ECZ - EMERGENCY CONDENSE
5ECX - EMERGENCY CONDENSE
81SZ - FREQUENCY RELAY
65SD - GOVERNOR SHUTDOWN RELAY
65GLS - GATE LOCK RELAY
65GL - (SOL)-GATE LOCK SOLENOID PORTS OIL TO GATE LOCK DEVICE
65SDY - PARTIAL SHUTDOWN RELAY (SPEED NO LOAD)
65SNL - SPEED NO LOAD
65MSBP - GOV DASHPOT BYPASS (TEMP SVC @ STARTUP)
65ML - GOV GATE LIMIT MOTOR
65MS - GOV SPEED ADJUST MOTOR
62X1 - RELAY TIMER TURNS OFF AUX FUNCTIONS AFTER SHUTDOWN
62X2 - INSTANANEOUS RELAY USED TO SEAL IN AROUND URX IN 62X CIRCUIT
62X3 - TIMER USED TO KEEP AUX FUNCTIONS OPERATING FOR SPECIFIED TIME
URX - UNIT RUN AUX RELAY (PICKED UP WHEN UNIT SHUTS DOWN)
20B - BRAKE RELEASE SOLENOID
20A - BRAKE RESET TIMER (APPLIES UNIT BRAKE AFTER SHUTDOWN)

REVISION LEVEL	DESCRIPTION	DATE	BY
2	CADD DRAWING UPDATED PER COMMENTS FROM U.S. ARMY CORPS OF ENGINEERS	12/16/98	BW
1	CADD DRAWING CREATED FROM BOARD DRAWING, INFORMATION FURNISHED BY THE U.S. ARMY CORPS OF ENGINEERS	10/3/97	LP

REVISIONS

HYDROELECTRIC DESIGN CENTER
NORTH PACIFIC DIV., PORTLAND, OR

U.S. ARMY ENGINEER DISTRICT
CORPS OF ENGINEERS
SAVANNAH, GEORGIA

POWER PLANT

UNIT 1-4
GENERATOR AND TURBINE CONTROLS

HARTWELL DAM AND LAKE MAJOR REHAB
SAVANNAH RIVER GEORGIA AND S. CAROLINA

SIZE	SOLICITATION NO.	FILE NO.	PLATE
F		HWP-5.5-6-0/1	

SCALE: _____ SHEET

FILE NAME: 505601.dgn

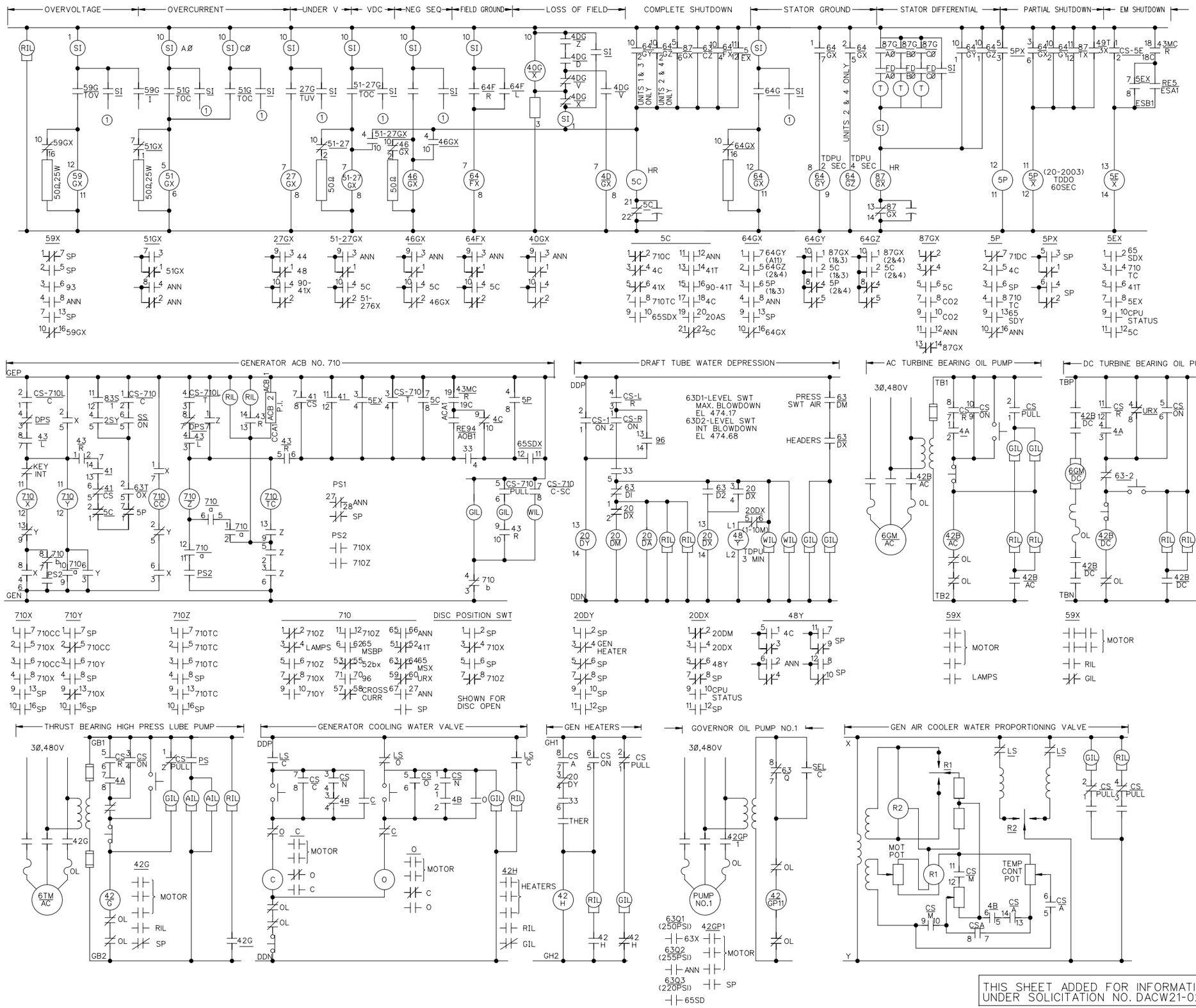

NOTES:

1. RELAY SICONTACTS SHOWN WITH (1) ARE DISCONNECTED INSIDE RELEY CASE.
2. SYMBOLS —ACB-R— P.I. ARE PHOTO-ISOLATED STATUS INPUTS TO COMPUTER.

THIS SHEET ADDED FOR INFORMATION ONLY UNDER SOLICITATION NO. DACW21-02

REVISION LEVEL	DESCRIPTION	DATE	BY

REVISIONS

U. S. ARMY ENGINEER DISTRICT, SAVANNAH
CORPS OF ENGINEERS
SAVANNAH, GEORGIA

POWER PLANT

UNIT 1-4
GENERATOR PROT. & AUX.

HARTWELL PROJECT AND POWER PLANT
SAVANNAH RIVER ___ GEORGIA AND SOUTH CAROLINA

SIZE	INVITATION NO.	FILE NO.	PLATE
F	----------	HWP-5.5-6-0/2	----

SCALE: NONE SHEET ---

8 MAY 2002

FILE NAME: 505602.dgn

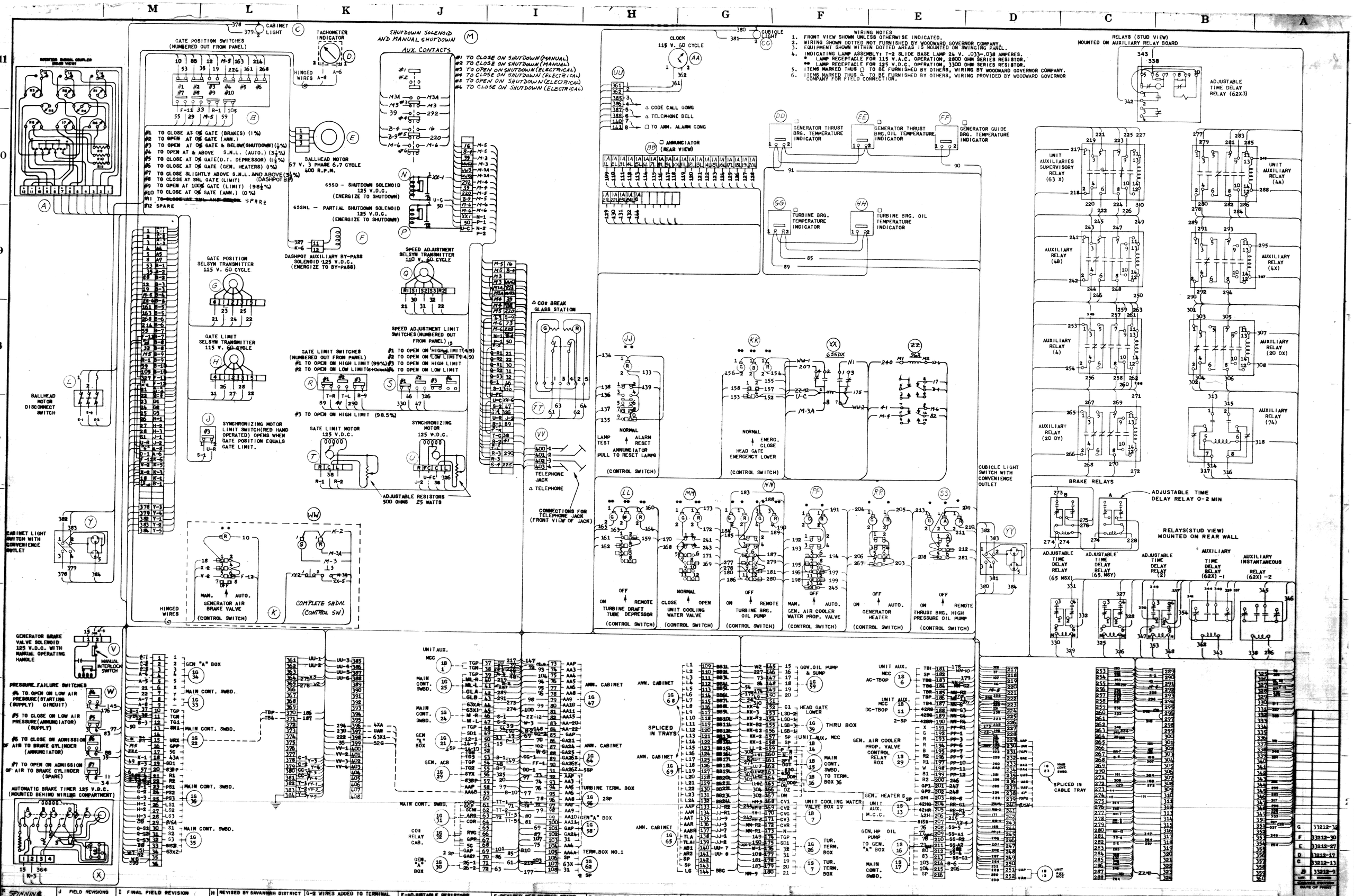
WIRING NOTES
1. FRONT VIEW SHOWN UNLESS OTHERWISE INDICATED.
2. WIRING SHOWN DOTTED NOT FURNISHED BY WOODWARD GOVERNOR COMPANY.
3. EQUIPMENT SHOWN WITHIN DOTTED AREAS IS MOUNTED ON SWINGING PANEL.
4. INDICATING LAMP ASSEMBLY: T-2 SLIDE BASE LAMP 24 V. .033-.038 AMPERES.
* LAMP RECEPTACLE FOR 115 V.A.C. OPERATION, 2800 OHM SERIES RESISTOR.
** LAMP RECEPTACLE FOR 125 V.D.C. OPERATION, 3300 OHM SERIES RESISTOR.
5. ITEMS MARKED THUS □ TO BE FURNISHED BY OTHERS, WIRING BY WOODWARD GOVERNOR COMPANY.
6. ITEMS MARKED THUS △ TO BE FURNISHED BY OTHERS, WIRING PROVIDED BY WOODWARD GOVERNOR COMPANY FOR FIELD CONNECTION.
CABINET LIGHT
GATE POSITION SWITCHES (NUMBERED OUT FROM PANEL)
TACHOMETER INDICATOR
HINGED WIRES
SHUTDOWN SOLENOID AND MANUAL SHUTDOWN
AUX. CONTACTS
#1 TO CLOSE ON SHUTDOWN (MANUAL)
#2 TO CLOSE ON SHUTDOWN (MANUAL)
#3 TO OPEN ON SHUTDOWN (ELECTRICAL)
#4 TO CLOSE ON SHUTDOWN (ELECTRICAL)
#5 TO OPEN ON SHUTDOWN (ELECTRICAL)
#6 TO CLOSE ON SHUTDOWN (ELECTRICAL)
#1 TO CLOSE AT 0% GATE (BRAKES) (1%)
#2 TO OPEN AT 0% GATE (ANN.)
#3 TO OPEN AT 0% GATE & BELOW (SHUTDOWN) (1½%)
#4 TO OPEN AT & ABOVE S.N.L. (AUTO.) (3½%)
#5 TO CLOSE AT 0% GATE (D.T. DEPRESSOR) (1½%)
#6 TO CLOSE AT 0% GATE (GEN. HEATERS) (1%)
#7 TO CLOSE SLIGHTLY ABOVE S.N.L. AND ABOVE (3½%)
#8 TO CLOSE AT SNL GATE (LIMIT) (DASHPOT BY)
#9 TO OPEN AT 100% GATE (LIMIT) (98½%)
#10 TO CLOSE AT 0% GATE (ANN.) (0%)
#11 TO CLOSE AT SNL AND ABOVE
#12 SPARE
BALLHEAD MOTOR 67 V. 3 PHASE 6.7 CYCLE 400 R.P.M.
65SD - SHUTDOWN SOLENOID 125 V.D.C. (ENERGIZE TO SHUTDOWN)
65SNL - PARTIAL SHUTDOWN SOLENOID 125 V.D.C. (ENERGIZE TO SHUTDOWN)
DASHPOT AUXILIARY BY-PASS SOLENOID 125 V.D.C. (ENERGIZE TO BY-PASS)
GATE POSITION SELSYN TRANSMITTER 115 V. 60 CYCLE
SPEED ADJUSTMENT SELSYN TRANSMITTER 110 V. 60 CYCLE
GATE LIMIT SELSYN TRANSMITTER 115 V. 60 CYCLE
SPEED ADJUSTMENT LIMIT SWITCHES (NUMBERED OUT FROM PANEL)
#1 TO OPEN ON HIGH LIMIT (99%)
#2 TO OPEN ON LOW LIMIT (6+0 clock)
#3 TO OPEN ON HIGH LIMIT (98.5%)
#4 TO OPEN ON LOW LIMIT
GATE LIMIT SWITCHES (NUMBERED OUT FROM PANEL)
#1 TO OPEN ON HIGH LIMIT (99%)
#2 TO OPEN ON LOW LIMIT
#3 TO OPEN ON HIGH LIMIT (98.5%)
BALLHEAD MOTOR DISCONNECT SWITCH
SYNCHRONIZING MOTOR LIMIT SWITCH (RED HAND OPERATED) OPENS WHEN GATE POSITION EQUALS GATE LIMIT.
GATE LIMIT MOTOR 125 V.D.C.
SYNCHRONIZING MOTOR 125 V.D.C.
ADJUSTABLE RESISTORS 500 OHMS 25 WATTS
CO2 BREAK GLASS STATION
TELEPHONE JACK
△ TELEPHONE
CONNECTIONS FOR TELEPHONE JACK (FRONT VIEW OF JACK)
CABINET LIGHT SWITCH WITH CONVENIENCE OUTLET
GENERATOR AIR BRAKE VALVE (CONTROL SWITCH)
COMPLETE S/DN. (CONTROL SW)
HINGED WIRES
GENERATOR BRAKE VALVE SOLENOID 125 V.D.C. WITH MANUAL OPERATING HANDLE
MANUAL INTERLOCK SWITCH
PRESSURE FAILURE SWITCHES
#4 TO OPEN ON LOW AIR PRESSURE (STARTING (SUPPLY) CIRCUIT)
#5 TO CLOSE ON LOW AIR PRESSURE (ANNUNCIATOR) (SUPPLY)
#6 TO CLOSE ON ADMISSION OF AIR TO BRAKE CYLINDER (ANNUNCIATOR)
#7 TO OPEN ON ADMISSION OF AIR TO BRAKE CYLINDER (SPARE)
AUTOMATIC BRAKE TIMER 125 V.D.C. (MOUNTED BEHIND WIRING COMPARTMENT)
CLOCK 115 V. 60 CYCLE
CUBICLE LIGHT
△ CODE CALL GONG
△ TELEPHONE BELL
□ TO ANN. ALARM GONG
□ ANNUNCIATOR (REAR VIEW)
GENERATOR THRUST BRG. TEMPERATURE INDICATOR
GENERATOR THRUST BRG. OIL TEMPERATURE INDICATOR
GENERATOR GUIDE BRG. TEMPERATURE INDICATOR
TURBINE BRG. TEMPERATURE INDICATOR
TURBINE BRG. OIL TEMPERATURE INDICATOR
LAMP TEST
ALARM RESET
ANNUNCIATOR PULL TO RESET LAMPS
(CONTROL SWITCH)
NORMAL
EMERG. CLOSE
HEAD GATE EMERGENCY LOWER
(CONTROL SWITCH)
TURBINE DRAFT TUBE DEPRESSOR (CONTROL SWITCH)
UNIT COOLING WATER VALVE (CONTROL SWITCH)
TURBINE BRG. OIL PUMP (CONTROL SWITCH)
GEN. AIR COOLER WATER PROP. VALVE (CONTROL SWITCH)
GENERATOR HEATER (CONTROL SWITCH)
THRUST BRG. HIGH PRESSURE OIL PUMP (CONTROL SWITCH)
CUBICLE LIGHT SWITCH WITH CONVENIENCE OUTLET
RELAYS (STUD VIEW) MOUNTED ON AUXILIARY RELAY BOARD
ADJUSTABLE TIME DELAY RELAY (62X3)
UNIT AUXILIARIES SUPERVISORY RELAY (63 X)
UNIT AUXILIARY RELAY (4A)
AUXILIARY RELAY (4B)
AUXILIARY RELAY (4X)
AUXILIARY RELAY (4)
AUXILIARY RELAY (20 DX)
AUXILIARY RELAY (20 DY)
AUXILIARY RELAY (74)
BRAKE RELAYS
ADJUSTABLE TIME DELAY RELAY 0-2 MIN.
RELAYS (STUD VIEW) MOUNTED ON REAR WALL
ADJUSTABLE TIME DELAY RELAY (65 MSX)
ADJUSTABLE TIME DELAY RELAY (65 MSY)
ADJUSTABLE TIME DELAY RELAY (2)
AUXILIARY TIME DELAY RELAY (62X)-1
AUXILIARY INSTANTANEOUS RELAY (62X)-2
GEN "A" BOX
MAIN CONT. SWBD.
GEN. ACB
UNIT AUX. MCC
ANN. CABINET
TURBINE TERM. BOX
TERM. BOX NO. 1
SPLICED IN TRAYS
HEAD GATE LOWER
THRU BOX
GOV. OIL PUMP & SUMP
UNIT COOLING WATER VALVE BOX 19
GEN. AIR COOLER PROP. VALVE CONTROL RELAY BOX
GEN. HEATERS
GEN. HP OIL PUMP
TO GEN. "A" BOX
TO TERM. BOX 36
SPLICED IN CABLE TRAY
SPINNING RESERVE
FIELD REVISIONS
FINAL FIELD REVISION
REVISED BY SAVANNAH DISTRICT ADDED RELAYS A AND B. REVISED BRAKE CIRCUIT
G-2 WIRES ADDED TO TERMINAL BLOCK 41/M-4. CONNECTIONS FOR TELEPHONE JACK ADDED AND 3 CLOSE TERMINALS ADDED TO TERMINAL BLOCK 18 TO AGREE WITH EQUIPMENT FURNISHED.
F-ADJUSTABLE RESISTORS ADDED TO GATE LIMIT AND SYNCHRONIZING MOTORS TO AGREE WITH EQUIPMENT FURNISHED
E-REVISED PER MARKED PRINT AND LETTER DATED 8 MAR. 1961 FROM U.S. ARMY CORPS OF ENGINEERS. ALSO PER ELECTRO DEVICES, INC. DWG. 1900-170K AND LETTER DATED 17 APR. 1961 FROM KIRKHOF ELECTRIC CO.
D-REVISED PER MARKED PRINT AND LETTER DATED 18 OCT. 1960 FROM U.S. ARMY CORPS OF ENGINEERS
C-REVISED PER MARKED PRINTS AND LETTER DATED 2 AUG. 1960 FROM U.S. ARMY CORPS OF ENGINEERS.
B-REDRAWN PER MARKED PRINT AND LETTER DATED 6 APRIL 1960 FROM U.S. ARMY CORPS OF ENGINEERS.
WOODWARD GOVERNOR COMPANY ROCKFORD, ILLINOIS
DATE 1-21-60 DRN. BY R. COCKRELL
WIRING DIAGRAM FOR U.S. ARMY CORPS OF ENGINEERS HARTWELL PROJECT
MC-142
33212-32
33212-30
33212-27
33212-17
33212-13
33212-9
SHEET 1
NPP-UG-7

EQUIPMENT MOUNTED ON FRONT FACE OF ACTUATOR & CUBICLE

1. ELECTRIC TACHOMETER
2. DUPLEX AIR BRAKE GAUGE
3. OIL PRESSURE GAUGE
4. TRANSFER VALVE POSITION INDICATOR
5. SPEED DROOP POSITION INDICATOR
6. GATE LIMIT & GATE POSITION INDICATOR
7. SPEED ADJUSTMENT POSITION INDICATOR
8. SPEED DROOP CONTROL KNOB
9. GATE LIMIT CONTROL KNOB
10. SPEED ADJUSTMENT CONTROL KNOB
11. GENERATOR AIR BRAKE CONTROL SWITCH
12. TRANSFER VALVE CONTROL KNOB
13. MANUAL SHUTDOWN & RESET

XX14. GENERATOR CO_2 BREAK GLASS STATION
XX15. PAX TELEPHONE
16. SOUND POWER TELEPHONE JACK
17. CLOCK
18. ANNUNCIATOR
19. ANNUNCIATOR TEST & RESET SWITCH
20.
21. HEADGATE EMERGENCY LOWER SWITCH(RED HANDLE)
22. TURBINE DRAFT TUBE DEPRESSOR SWITCH
23. UNIT COOLING WATER VALVE CONTROL SWITCH
24. TURBINE BEARING OIL PUMP CONTROL SWITCH

X25. TURBINE SPIRAL CASE PRESSURE GAUGE
X26. GENERATOR THRUST BEARING TEMPERATURE INDICATOR WITH ALARM CONTACTS
X27. GENERATOR THRUST BEARING OIL TEMPERATURE INDICATOR WITH ALARM CONTACTS
X28. GENERATOR GUIDE BEARING TEMPERATURE INDICATOR WITH ALARM CONTACTS
X29. TURBINE BEARING TEMPERATURE INDICATOR WITH ALARM CONTACTS
X30. TURBINE BEARING OIL TEMPERATURE INDICATOR WITH ALARM CONTACTS
X31. TURBINE BEARING OIL PRESSURE GAUGE
32. GENERATOR AIR COOLER WATER PROPORTIONING VALVE CONTROL SWITCH
33. GENERATOR HEATER CONTROL SWITCH
34. GENERATOR THRUST BEARING HIGH PRESSURE OIL PUMP SWITCH
35. LOUVER FOR:

X A. ALARM GONG
XX B. CODE CALL GONG
XX C. TELEPHONE BELL

36. HIGH PRESSURE OIL NAMEPLATE

AUXILIARY RELAY BOARD

40. UNIT AUXILIARIES SUPERVISORY RELAY (63X) TBW
41.
42. UNIT AUXILIARY RELAY (4a)
43. AUXILIARY RELAY (4b)
44. AUXILIARY RELAY (4X)
45. AUXILIARY RELAY (4)
46. AUXILIARY RELAY (20DX)
47. AUXILIARY RELAY (20DY)
48. AUXILIARY RELAY (74)
49. ADJUSTABLE TIME DELAY RELAY (65MSX)
50. ADJUSTABLE TIME DELAY RELAY (65MSY)
51. ADJUSTABLE TIME DELAY RELAY (62X)
52. ADJUSTABLE TIME DELAY RELAY (62Y)
53. AUXILIARY RELAY (62X TIME DELAY)
54. AUXILIARY RELAY (62X INSTANTANEOUS)

EQUIPMENT MOUNTED IN ACTUATOR BASE COMPARTMENTS & INSIDE CUBICLE

55. WIRING TERMINAL BLOCKS
56. CABLE CLAMPING BLOCKS-BORED IN FIELD
57. AUTOMATIC BRAKE TIMER
58. GENERATOR BRAKE VALVE SOLENOID WITH CONNECTIONS
    - A. 1 NPTF-AIR BRAKE CYLINDER
    - B. 1 NPTF-AIR PRESSURE SUPPLY
    - C. 1 NPTF-EXHAUST
59. AIR PRESSURE SWITCH
    - A. AIR PRESS. SUPPLY (START CIRCUIT) (63GBL)
    - B. AIR PRESS. SUPPLY (ANNUNCIATOR) 63GBL(AA20)
    - C. AIR BRAKE PRESS. (ANNUNCIATOR) 63GBA (GA25)
    - D. AIR BRAKE PRESS. (START CIRCUIT) 63GBA
60. COPPER GROUNDING BUSS BAR
61. PIPE TERMINAL BLOCK
    - A. PRESSURE TO ITEM 25
    - B. PRESSURE TO ITEM 31
    - C. DRAIN FROM ITEM 25
    - D. DRAIN FROM ITEM 31
62.
63. CUBICLE LIGHT SWITCH & CONVENIENCE OUTLET
64. PIPE TERMINAL BLOCK FOR ITEM 58-C

EQUIPMENT MOUNTED ON ACTUATOR CONTROL COLUMN

65. ROTATION SIGNAL COUPLER
66. DASHPOT AUXILIARY BY-PASS(SOLENOID OPERATED) (63MSBP)
67. SYNCHRONIZING MOTOR(63MS)
68. SPEED ADJUSTMENT LIMIT SWITCH
69. SPEED CHANGER SELSYN TRANSMITTER
70. SYNCHRONIZING MOTOR LIMIT SWITCH-RED HAND OPERATED
71. GATE LIMIT MOTOR(63ML)
72. GATE LIMIT SWITCH
73. GATE LIMIT SELSYN TRANSMITTER
74. GATE POSITION SELSYN TRANSMITTER
75. GATE POSITION SWITCH
76. SHUTDOWN SOLENOID WITH 4 AUX. CONTACTS(63SD)
77. PARTIAL SHUTDOWN SOLENOID(65SNL)
78. MANUAL SHUTDOWN AUXILIARY SWITCH WITH 2 CONTACTS
79. BALLHEAD MOTOR DISCONNECT SWITCH
80. OIL PRESSURE FAILURE SWITCH (SHUTDOWN)
81. PRESSURE FAILURE SWITCH (ALARM)
82. CABINET LIGHT SWITCH & CONVENIENCE OUTLET

EQUIPMENT MOUNTED EXTERNAL TO ACTUATOR

85. PERMANENT MAGNET GENERATOR INCLUDING
    - A. OVERSPEED SWITCH
    - B. #1 SPEED SWITCH (OVERSPEED)
    - C. #2 SPEED SWITCH (UNDERSPEED)
    - D. ROTATION SIGNAL TRANSMITTER

86. SWITCHBOARD EQUIPMENT
    - A. TACHOMETER
    - B. SPEED CHANGER SELSYN INDICATOR
    - C. GATE LIMIT & GATE POSITION SELSYN INDICATOR

87. PRESSURE TANK
    - A. FLOAT VALVE
    - B. MANHOLE
    - C. OIL LEVEL GAUGE
    - D. AIR BLOWOFF VALVE
    - E. 3/4 NPTF-AIR SUPPLY
    - F. 1" DRAIN LINE WITH VALVE

NOTE

1. ITEMS MARKED THUS "X" TO BE FURNISHED BY OTHERS AND INSTALLED BY WOODWARD GOVERNOR COMPANY.
2. ITEMS MARKED THUS "XX" TO BE FURNISHED BY OTHERS AND WOODWARD GOVERNOR COMPANY TO PROVIDE NECESSARY CUT-OUTS, DRILLING AND PROVISION FOR MOUNTING THE INSTRUMENTS.
3. INDICATING LIGHT SYMBOLS
   - Ⓦ WHITE INDICATING LIGHT
   - Ⓡ RED INDICATING LIGHT
   - Ⓖ GREEN INDICATING LIGHT
   - Ⓑ BLUE INDICATING LIGHT
   - Ⓐ AMBER INDICATING LIGHT
4. PIPING CONNECTIONS AT ACTUATOR
   - I. 5"-300# FLANGE CONNECTION-DISTRIBUTING VALVE SUPPLY.
   - II. 5"-150# FLANGE CONNECTION-DISTRIBUTING VALVE DISCHARGE
   - III. 5"-300#FLANGE CONNECTION-PRESSURE TO SERVOMOTOR (CLOSE GATES)
   - IV. 5"-300# FLANGE CONNECTION-PRESSURE TO SERVOMOTOR (OPEN GATES)
   - V. 1" NPTF-FOR RESTORING CONDUIT
5. BEZELS TO BE SATIN CHROME FINISHED

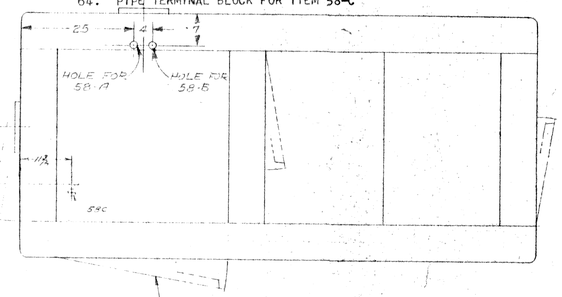

PLAN VIEW

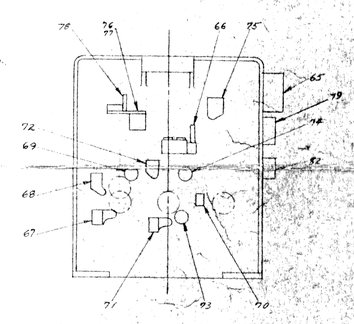

AUXILIARIES ON REAR AND SIDE OF ACTUATOR CONTROL COLUMN

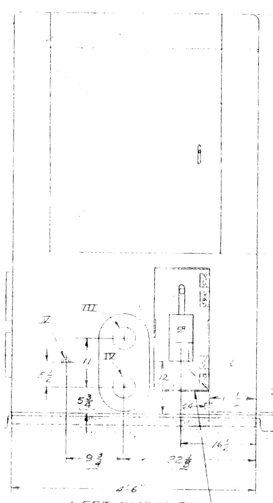

LEFT END VIEW

15½ × 28 OPENING FOR REMOVABLE PANEL

SWINGING INSTRUMENT PANEL

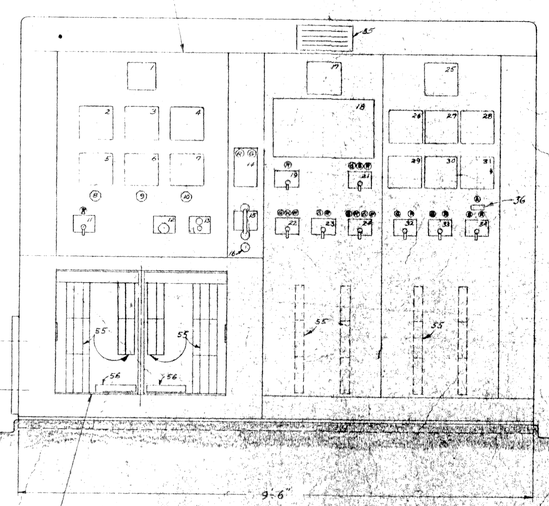

19 × 28 OPENING(2) FOR REMOVABLE PANEL

FRONT VIEW

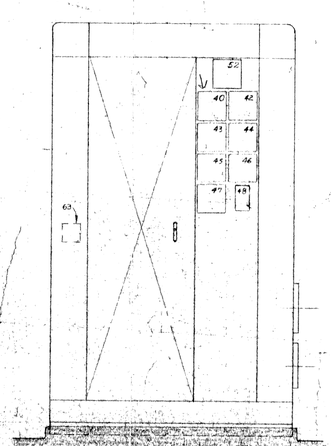

RIGHT END VIEW

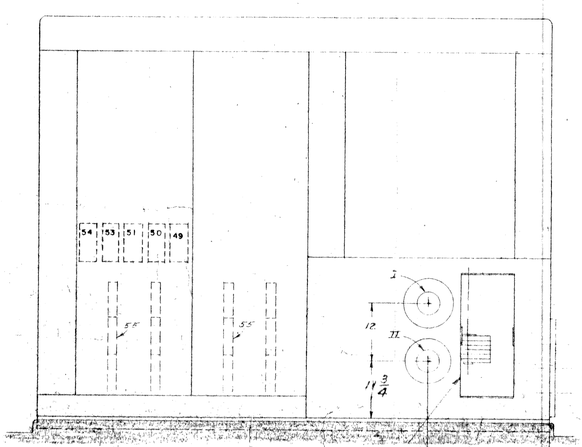

15½ × 28 OPENING FOR REMOVABLE PANEL

REAR VIEW

RES. ENGR. COPY

This drawing or any reproduction of it shall not be used for manufacture, production or procurement without the express written permission of the Woodward Governor Company.

MAR 23 1961

Use or reproduction for use in a normal manner consistent with goods or service furnished or ser... covered by Woodward is approved.

Corps of Engineers
SAVANNAH DISTRICT
Savannah, Georgia
DRAWING APPROVED
Date 30 MAR 1961
Chief Design Branch

LET.	NUMBER
F	33212-27
G	33212-23
D	33212-9
C	33212-7
B	33212-5
A	33212-1

CHANGE RECORD
DATE OF PRINT

F	INTERCHANGED RED AND GREEN LIGHTS ON ITEM 14 TO AGREE WITH WIRING DIAGRAM 971147 F. J. MATHEWS 3-22-61
D	RELOCATED ITEMS 49, 50, 51, & 52 AND ADDED ITEM 53, AUXILIARY RELAY (62 X TIME DELAY), AND ITEM 54, AUXILIARY RELAY (62 X INSTANTANEOUS). P.E. MANN 7-14-60
E	REMOVED ITEM 62, ADDED ITEM 79, ADDED NOTE 5, ADDED (B) ITEM 55, REVISED ITEM 48. R. SUTTER 12-20-60
B	CHANGED PER R.R. LUNDE U.S. ENGR. LETTER & MARKED PRINT 2-10-60 & PIPE I 12" WAS 13" PIPE II 11¾" WAS 13". ADDED ITEM #36 & REMOVED ITEM #41. REVISED GEN. BRAKE VALVE CONNECTIONS 58-A & 58-B & 58-C. 32¾ WAS 23¾ & 9¾ WAS 12¾. L. LINDGREN 3-7-60
C	DELETED ITEM #20 PER R.R. LUNDE U.S. ENGR. LETTER & MARKED PRINTS 4-6-60 & 4-18-60. L. LINDGREN 4-21-60

UNLESS OTHERWISE SPECIFIED:—BREAK CORNERS .06" TO .016". MACHINED SURFACES NOT TO EXCEED ___". FINISHED DIMENSIONS MAY VARY ±.010". FORGING AND CASTING DIMENSIONS MAY VARY ±.060". ALL ANGLES MAY VARY ±0°30'. DIMENSIONS SHOWN ARE AFTER PLATING. CONCENTRICITY (T.I.R.) OF ANY TWO DIAMETERS AROUND A COMMON AXIS SHALL BE WITHIN ½ THE SUM OF THE TOTAL TOLERANCES ON THOSE DIAMETERS. SEE 68-112 FOR INTERPRETATION OF SYMBOLS AND SURFACE FINISH STANDARDS.

WOODWARD GOVERNOR COMPANY
ROCKFORD, ILLINOIS

DATE 12-16-59 CKD. BY C. BUIST
DWG. BY L. W. LINDGREN APP. BY
SCALE 3/4 = 1'-0" REDRAWN 10 JAN 60 F.S.

FINISHED WT.
FIRST USED ON HC 442

MATERIAL
TREATMENT & FINISH

NAME
ACTUATOR ARRANGEMENT FOR HARTWELL PROJECT
U.S. ARMY CORPS OF ENGINEERS

REF.

NUMBER 982594-F
SHEET 1

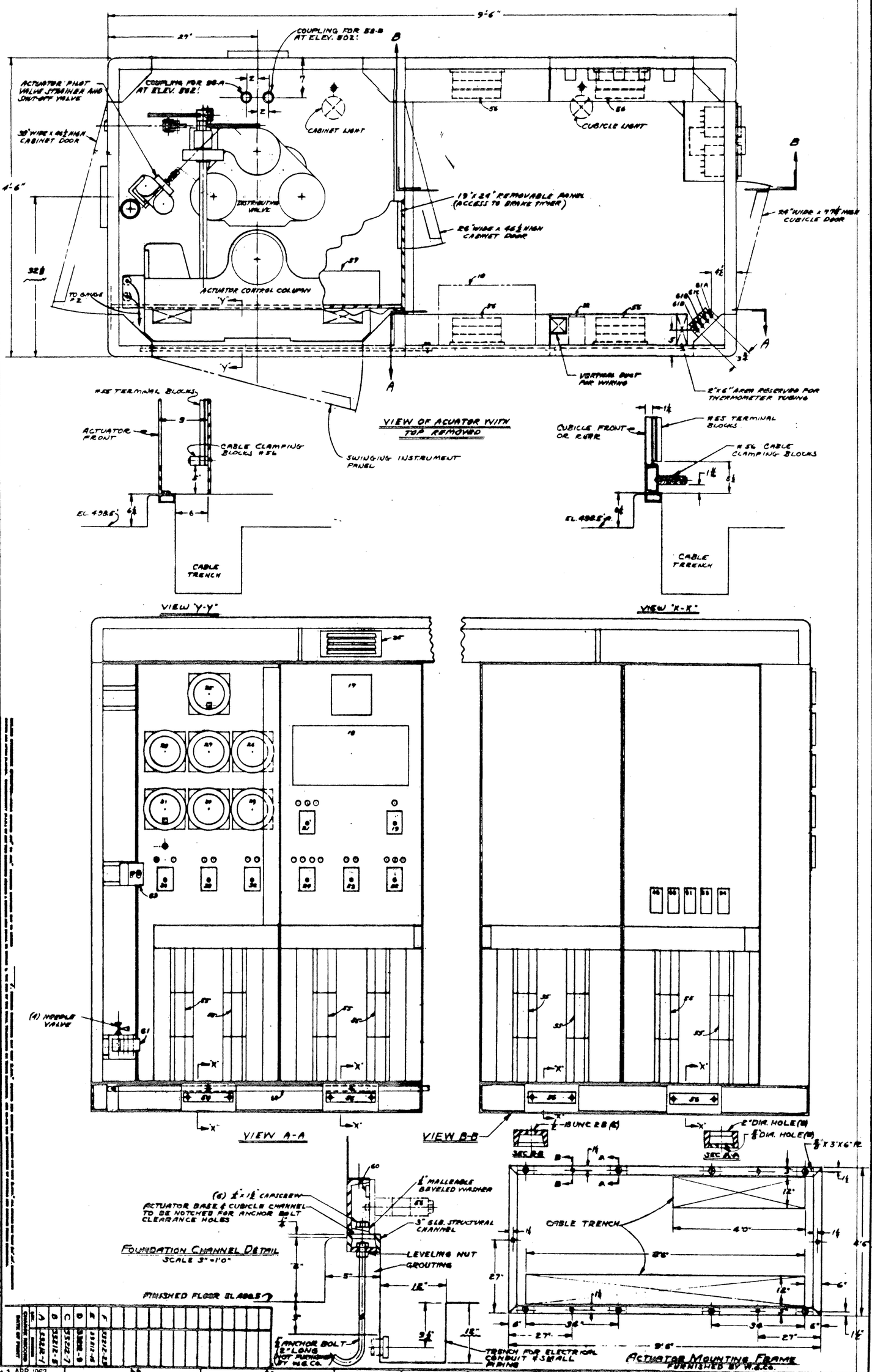
VIEW OF ACUATOR WITH TOP REMOVED
VIEW Y-Y
VIEW X-X
VIEW A-A
VIEW B-B
FOUNDATION CHANNEL DETAIL
SCALE 3"=1'0"
ACTUATOR MOUNTING FRAME
FURNISHED BY W.E.Co.
ACTUATOR ARRANGEMENT
HARTWELL PROJECT
U.S. ARMY CORPS OF ENGINEERS
WOODWARD GOVERNOR COMPANY
982594-F
SHEET 2
RECORD COPY 1 APR 1963