US Army Corps of Engineers
Savannah District

RICHARD B. RUSSELL DAM & LAKE

SAVANNAH RIVER, GEORGIA AND SOUTH CAROLINA

UNITS 1-8 GOVERNOR RETROFIT

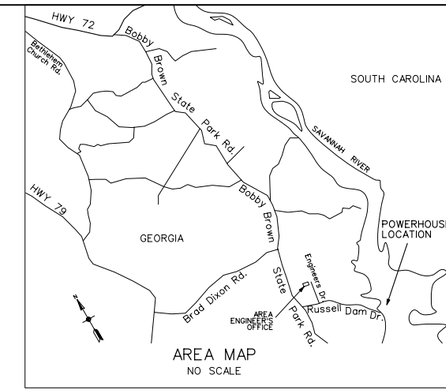

AREA MAP
NO SCALE

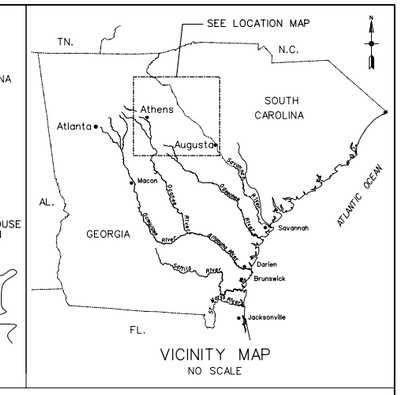

VICINITY MAP
NO SCALE

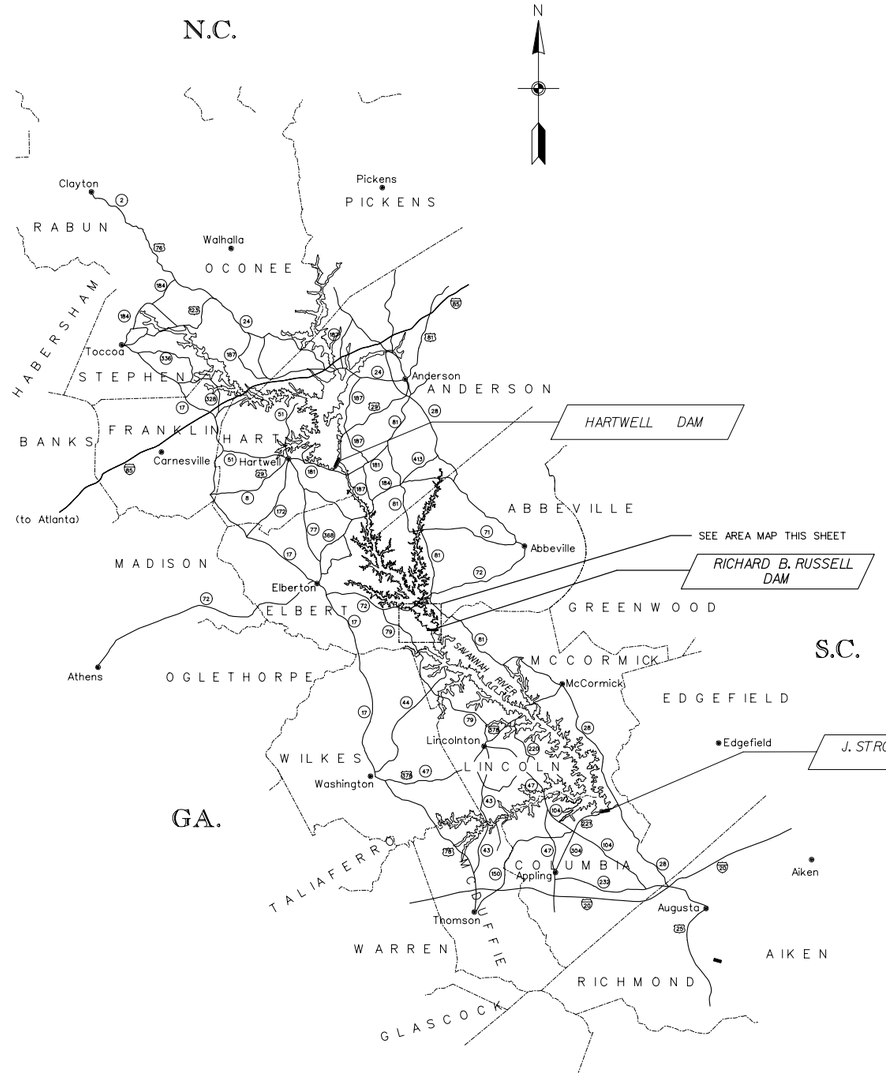

LOCATION MAP

SCALE: 1"= APPROX. 8 MI.

10 5 0 10 20 30 40

INDEX OF DRAWINGS

DWG NO.	TITLE
503001	PROJECT AREA, LOCATION AND VICINITY MAP
R43046	D.C. ELEMENTARY DIAGRAM GENERATOR NO. 1
R43047	D.C. ELEMENTARY DIAGRAM GENERATOR NO. 1
R43048	D.C. ELEMENTARY DIAGRAM GENERATOR NO. 2
R43049	D.C. ELEMENTARY DIAGRAM GENERATOR NO. 2
RES02UCO	GENERATOR #2, GENERATOR & TURBINE CONTROLS D.C. ELEMENTARY DIAGRAM SHEET 1 OF 2
RES02UC1	GENERATOR #2 GENERATOR & TURBINE CONTROLS D.C. ELEMENTARY DIAGRAM SHEET 2 OF 2
RES05UCO	MAIN CONTROL SWITCHBOARD UNIT 5, GEN/MOTOR & TURBINE CONTROLS SHEET 1 OF 2
RES05UC1	MAIN CONTROL SWITCHBOARD UNIT 5, GEN/MOTOR & TURBINE CONTROLS SHEET 2 OF 2

REVISION	DATE	DESCRIPTION	APPROVED
0	00	INITIAL RELEASE	CHIEF ATLANTIC BRANCH

HYDROELECTRIC DESIGN CENTER
PORTLAND, OREGON

U.S. ARMY ENGINEER DISTRICT
SAVANNAH, GEORGIA

DESIGNED: NAME
DRAWN: E. HANSON
CHECKED: NAME
PREPARED: JAMES NORLIN
CHIEF ATLANTIC BRANCH
CONTRACT NUMBER:

RICHARD B. RUSSELL DAM AND LAKE
SAVANNAH RIVER, GEORGIA AND S. CAROLINA
POWER PLANT
GEN #1 & 2 GEN & TURBINE CONTROLS
PROJECT AREA, LOCATION AND VICINITY MAP

SUBMITTED:
BRENT L. MAHAN
DIRECTOR, HYDROELECTRIC DESIGN CENTER

SCALE AS SHOWN | SHEET NO. 1
DWG NO. RRP-5.3-0-0/1

MICROSTATION VER SE

DATE: SEPTEMBER 25 2002

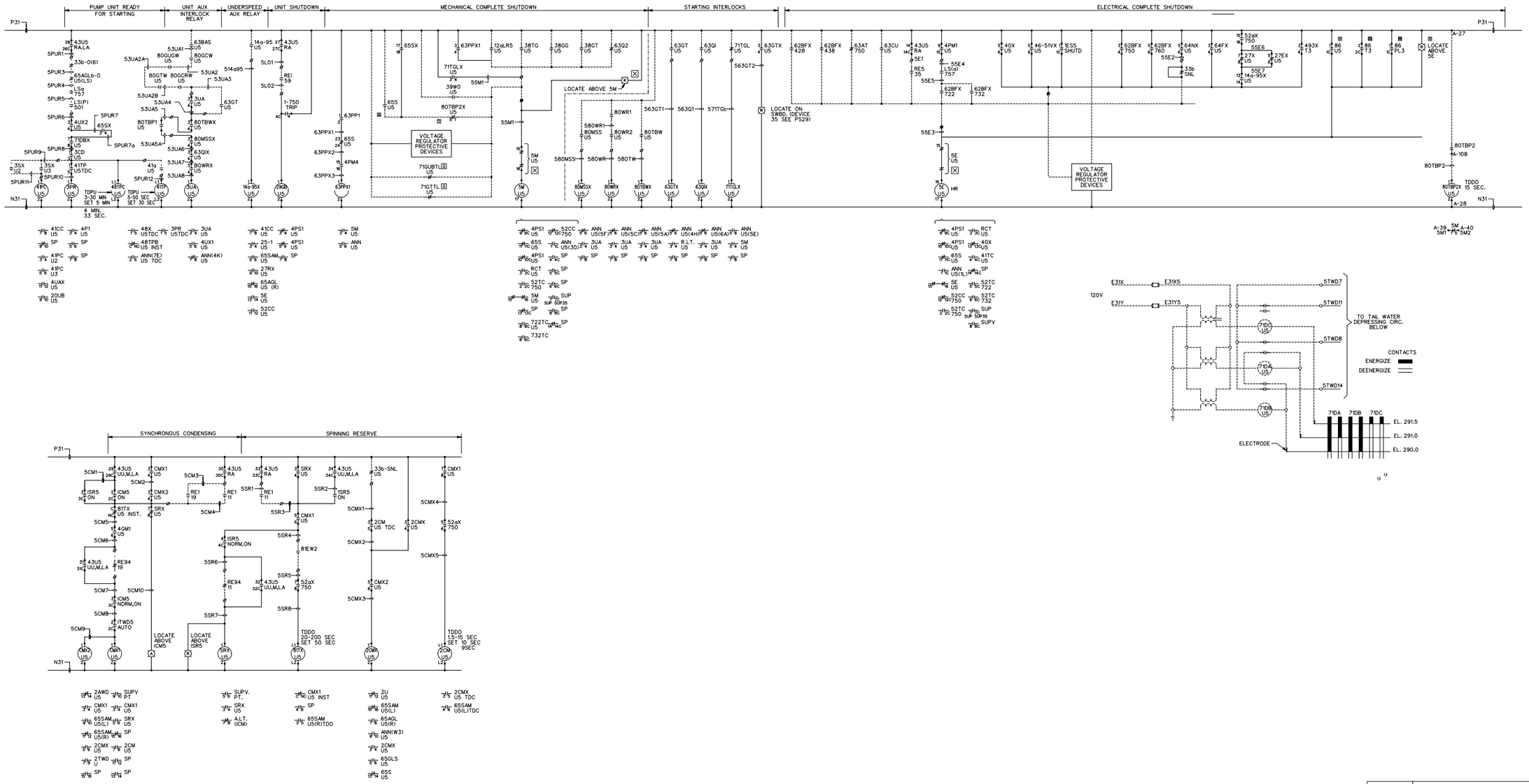

GENERATOR/MOTOR AND TURBINE CONTROLS
UNIT 5

DEVICES & CONNECTIONS SHOWN DOTTED ARE NOT FURNISHED BY CENTRAL SWITCHBOARD CORPORATION

TERMINAL BLOCK AT MAIN SWITCHBOARD
TERMINAL BLOCK AT AUXILLARY SWITCHBOARD

NOTE:
SEE DWG. NO. E-10039 FOR GENERAL NOTES.

REVISION LEVEL	DESCRIPTION	DATE	BY
6	CADD DRAWING CREATED FROM EXISTING DGN. INFORMATION FURNISHED BY THE U.S. ARMY CORPS OF ENGINEERS	4/23/97	RW

REVISIONS

U. S. ARMY ENGINEER DISTRICT, SAVANNAH
CORPS OF ENGINEERS
SAVANNAH, GEORGIA

POWER PLANT
MAIN CONTROL SWITCHBOARD
UNIT 5
GENERATOR/MOTOR AND TURBINE CONTROLS
RICHARD B. RUSSELL DAM AND RESERVOIR
SAVANNAH RIVER GEORGIA AND SOUTH CAROLINA

SIZE	INVITATION NO.	FILE NO.	PLATE
F		RES05UC1	

SCALE: NONE SHEET 2 OF 2

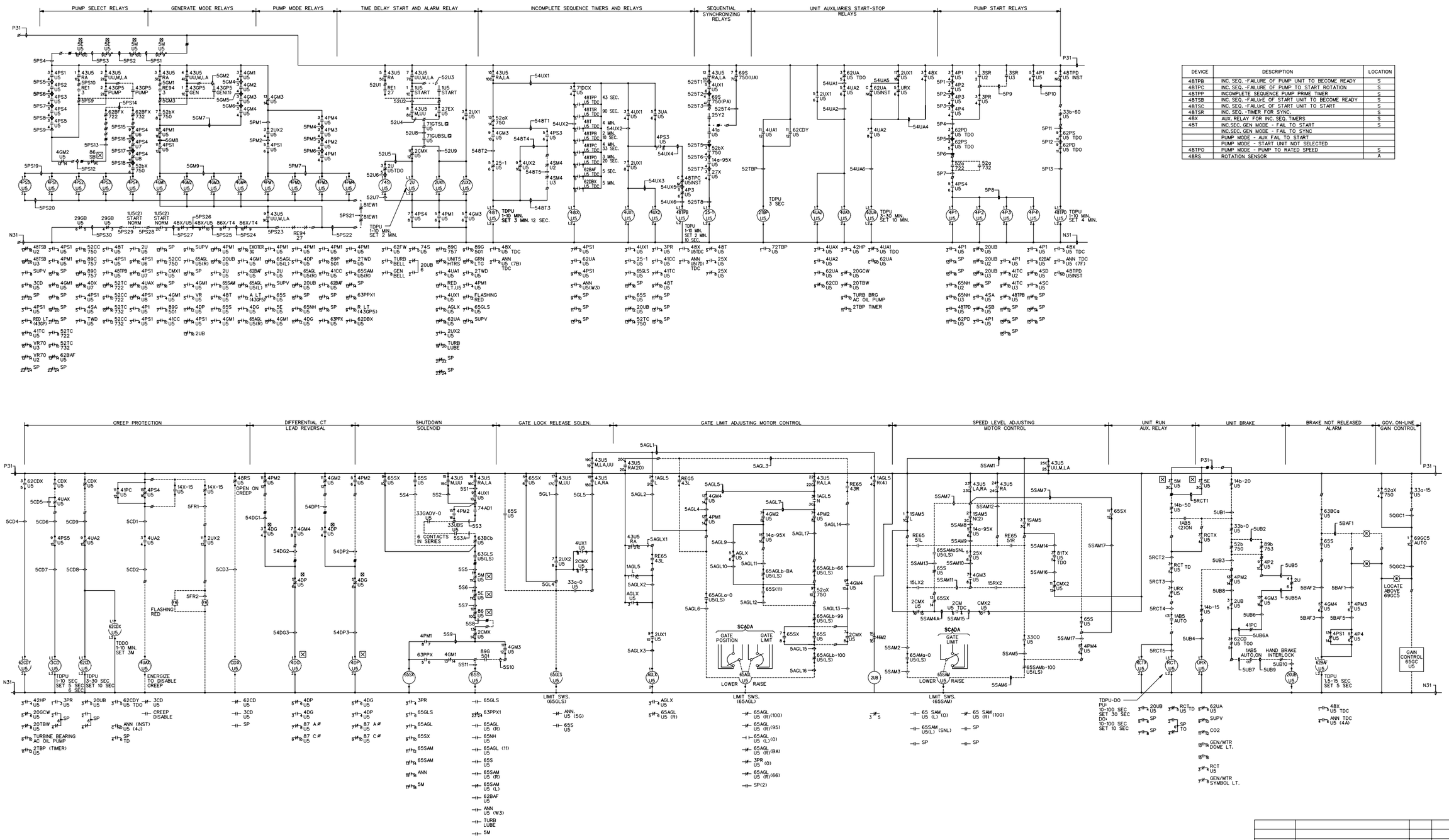

DEVICE	DESCRIPTION	LOCATION
48TPB	INC. SEQ. -FAILURE OF PUMP UNIT TO BECOME READY	S
48TPC	INC. SEQ. -FAILURE OF PUMP TO START ROTATION	S
48TPP	INCOMPLETE SEQUENCE PUMP PRIME TIMER	S
48TSB	INC. SEQ. -FAILURE OF START UNIT TO BECOME READY	S
48TSC	INC. SEQ. -FAILURE OF START UNIT TO START	S
48TSR	INC. SEQ. -TIMER FOR SYNC.	S
48X	AUX. RELAY FOR INC. SEQ. TIMERS	S
48T	INC.SEQ. GEN MODE - FAIL TO START	S
	INC.SEC. GEN MODE - FAIL TO SYNC	
	PUMP MODE - AUX FAIL TO START	
	PUMP MODE - START UNIT NOT SELECTED	
48TPO	PUMP MODE - PUMP TO RATED SPEED	S
48RS	ROTATION SENSOR	A

GENERATOR/MOTOR AND TURBINE CONTROLS
UNIT 5

DEVICES & CONNECTIONS SHOWN DOTTED ARE NOT FURNISHED BY CENTRAL SWITCHBOARD CORPORATION

TERMINAL BLOCK AT MAIN SWITCHBOARD

TERMINAL BLOCK AT AUXILLARY SWITCHBOARD

REVISION LEVEL	DESCRIPTION	DATE	BY
6	CADD DRAWING CREATED FROM E10054.DGN. INFORMATION FURNISHED BY THE U.S. ARMY CORPS OF ENGINEERS	4/23/97	RW

REVISIONS

U. S. ARMY ENGINEER DISTRICT, SAVANNAH
CORPS OF ENGINEERS
SAVANNAH, GEORGIA

POWER PLANT
MAIN CONTROL SWITCHBOARD
UNIT 5
GENERATOR/MOTOR AND TURBINE CONTROLS
RICHARD B. RUSSELL DAM AND RESERVOIR
SAVANNAH RIVER GEORGIA AND SOUTH CAROLINA

SIZE	INVITATION NO.	FILE NO.	PLATE
F		RES05UC0	
SCALE: NONE		SHEET 10F 2	

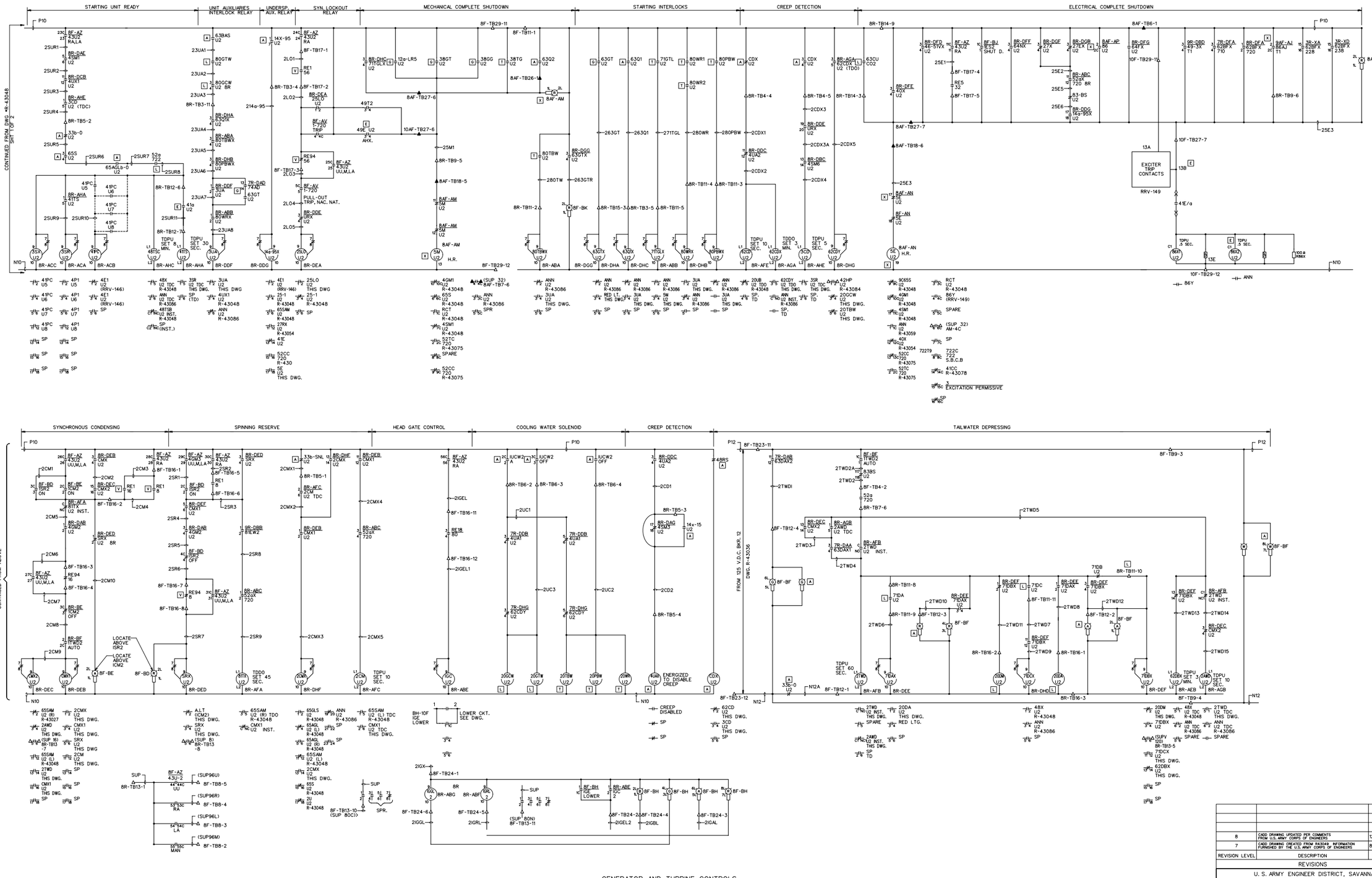

REVISION LEVEL	DESCRIPTION	DATE	BY
8	CADD DRAWING UPDATED PER COMMENTS FROM U.S. ARMY CORPS OF ENGINEERS	12/16/98	BW
7	CADD DRAWING CREATED FROM R43049 INFORMATION FURNISHED BY THE U.S. ARMY CORPS OF ENGINEERS	8/12/97	NW

REVISIONS

U. S. ARMY ENGINEER DISTRICT, SAVANNAH
CORPS OF ENGINEERS
SAVANNAH, GEORGIA

POWER PLANT

GENERATOR NO. 2, GENERATOR AND TURBINE CONTROLS
D.C. ELEMENTARY DIAGRAM
SHEET 2 OF 2

RICHARD B. RUSSELL DAM AND RESERVOIR
SAVANNAH RIVER GEORGIA AND SOUTH CAROLINA

SIZE	INVITATION NO.	FILE NO.	PLATE
F		RES02UC1	

SCALE: NONE SHEET 2 OF 2

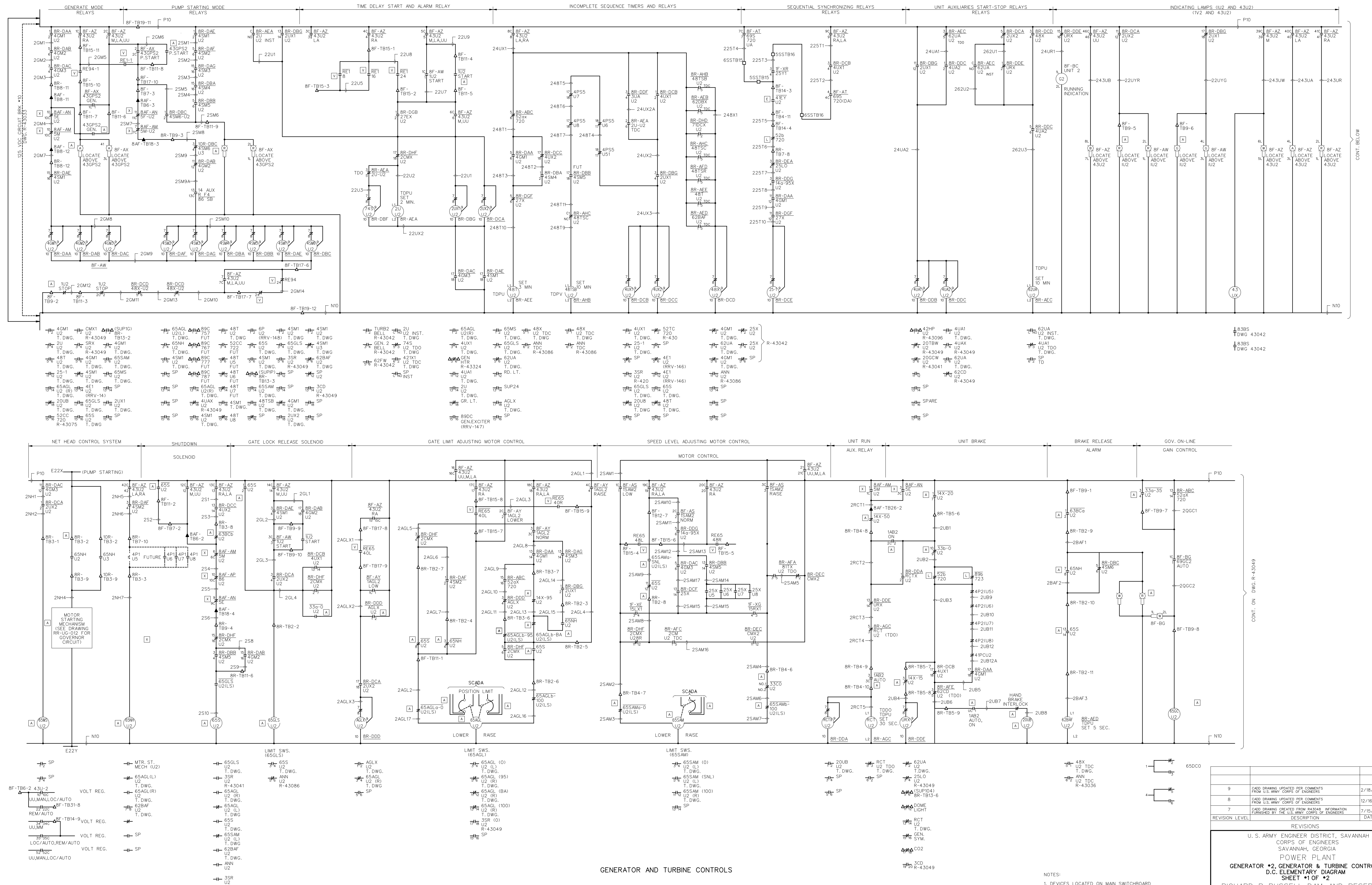

NOTES:

1. DEVICES LOCATED ON MAIN SWITCHBOARD UNLESS OTHERWISE NOTED.

REVISION LEVEL	DESCRIPTION	DATE	BY
9	CADD DRAWING UPDATED PER COMMENTS FROM U.S. ARMY CORPS OF ENGINEERS	2/18/99	BW
8	CADD DRAWING UPDATED PER COMMENTS FROM U.S. ARMY CORPS OF ENGINEERS	12/16/98	BW
7	CADD DRAWING CREATED FROM R43048 INFORMATION FURNISHED BY THE U.S. ARMY CORPS OF ENGINEERS	7/15/97	LP

REVISIONS

U. S. ARMY ENGINEER DISTRICT, SAVANNAH
CORPS OF ENGINEERS
SAVANNAH, GEORGIA

POWER PLANT

GENERATOR #2, GENERATOR & TURBINE CONTROLS
D.C. ELEMENTARY DIAGRAM
SHEET #1 OF #2

RICHARD B. RUSSELL DAM AND RESERVOIR
SAVANNAH RIVER — GEORGIA AND SOUTH CAROLINA

SIZE	INVITATION NO.	FILE NO.	PLATE
F		RES02UC0	

SCALE: NONE — SHEET 1 OF 2

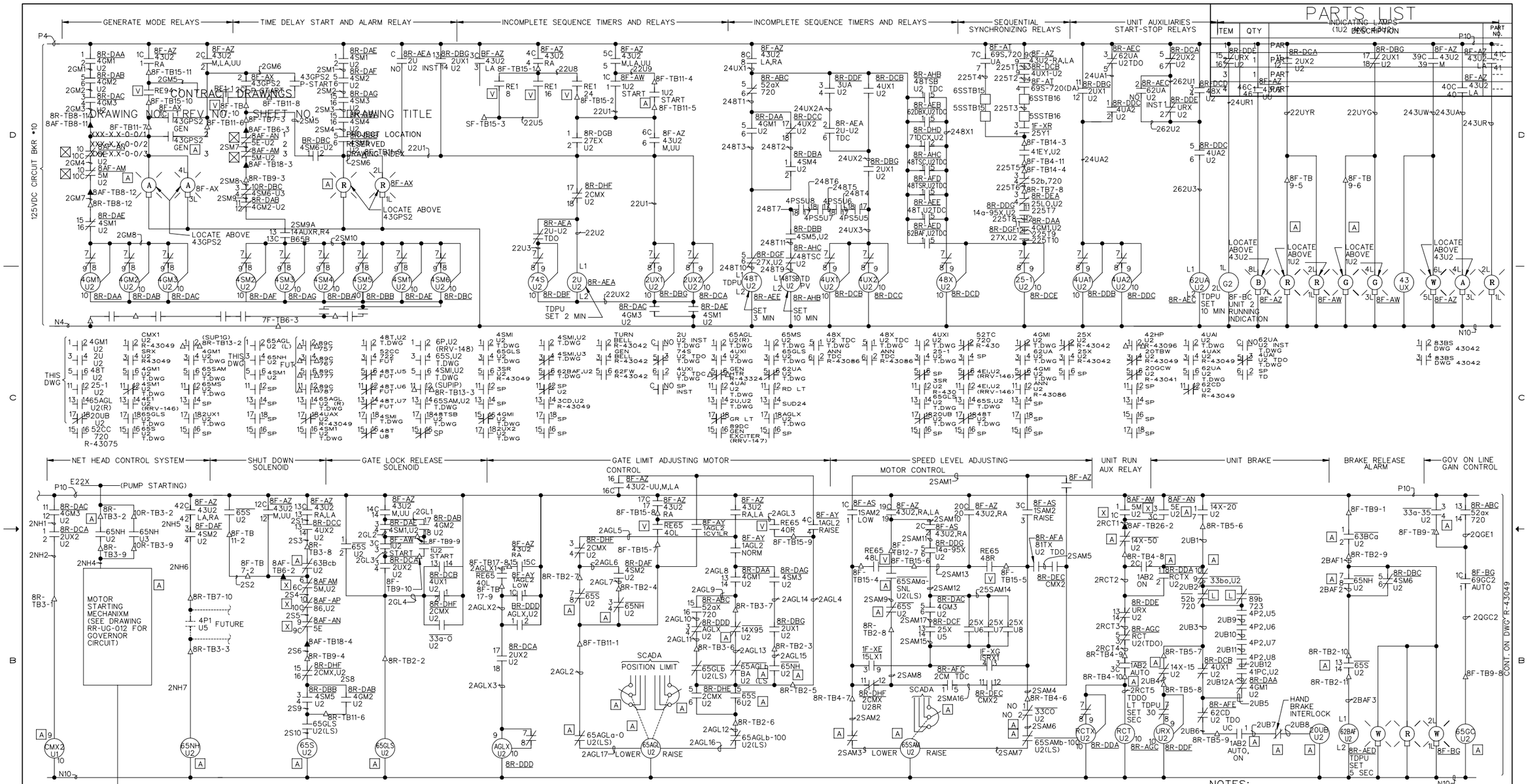

GENERATOR AND TURBINE CONTROLS

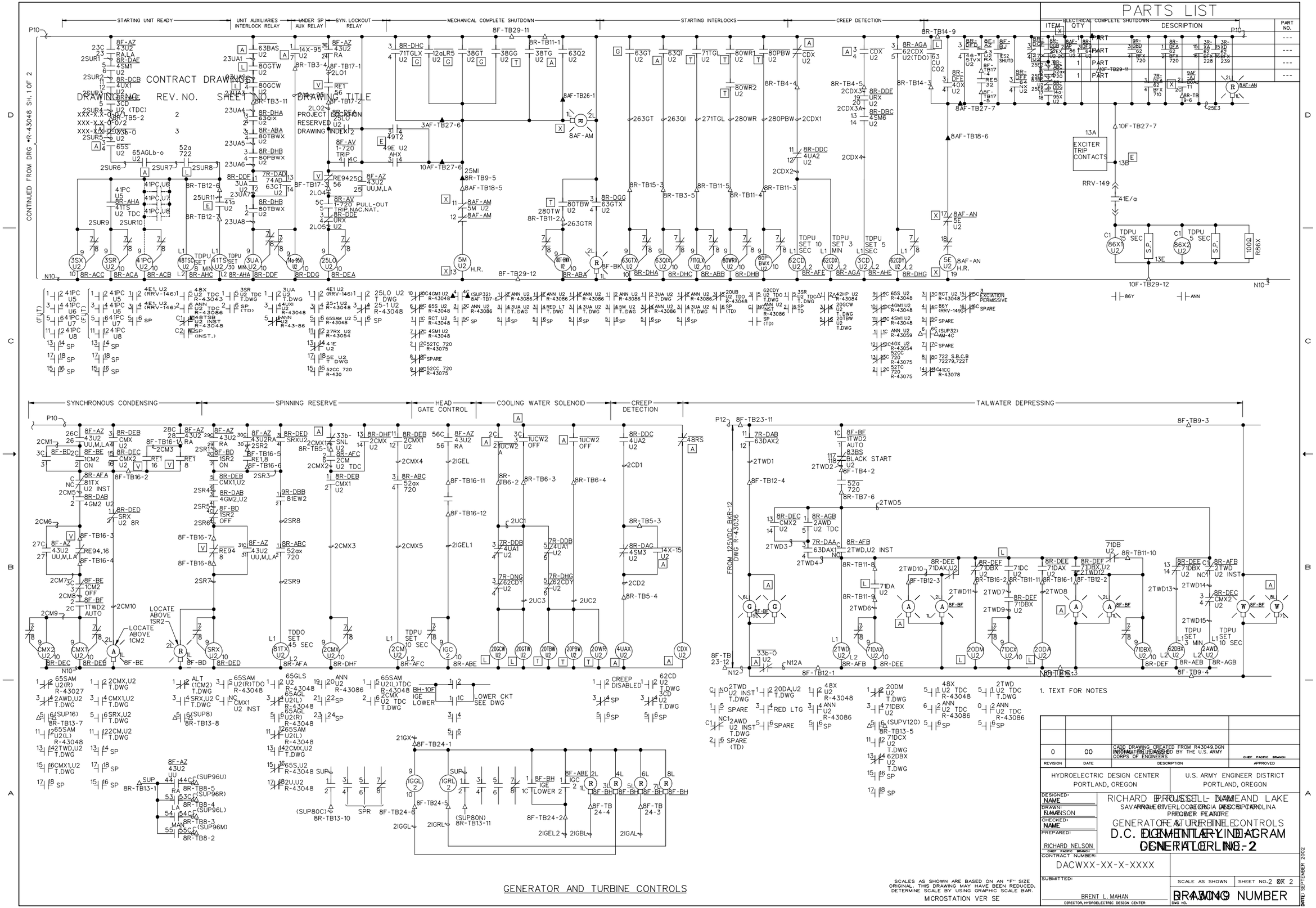

PARTS LIST

ITEM	QTY	DESCRIPTION	PART NO.

			---

1. TEXT FOR NOTES

REVISION	DATE	DESCRIPTION	APPROVED
0	00	CADD DRAWING CREATED FROM R43049.DGN INTERMATRIX RELEASED BY THE U.S. ARMY CORPS OF ENGINEERS	CHIEF PACIFIC BRANCH

HYDROELECTRIC DESIGN CENTER
PORTLAND, OREGON

U.S. ARMY ENGINEER DISTRICT
PORTLAND, OREGON

DESIGNED: NAME
DRAWN: NAME
CHECKED: NAME
PREPARED: RICHARD NELSON
CHIEF PACIFIC BRANCH

PROJECT: RICHARD B. RUSSELL - NAME AND LAKE
SAVANNAH RIVER, LOCATION: GEORGIA AND SOUTH CAROLINA
PROJECT FEATURE

GENERATOR AND TURBINE CONTROLS
D.C. CONTROL SCHEMATIC DIAGRAM
GENERATOR UNIT NO. 2

CONTRACT NUMBER: DACWXX-XX-X-XXXX

SUBMITTED: BRENT L. MAHAN
DIRECTOR, HYDROELECTRIC DESIGN CENTER

SCALE AS SHOWN | SHEET NO. 2 OF 2

DWG NO. R43049 NUMBER

DATE: SEPTEMBER 2002

SCALES AS SHOWN ARE BASED ON AN "F" SIZE ORIGINAL. THIS DRAWING MAY HAVE BEEN REDUCED. DETERMINE SCALE BY USING GRAPHIC SCALE BAR.
MICROSTATION VER SE

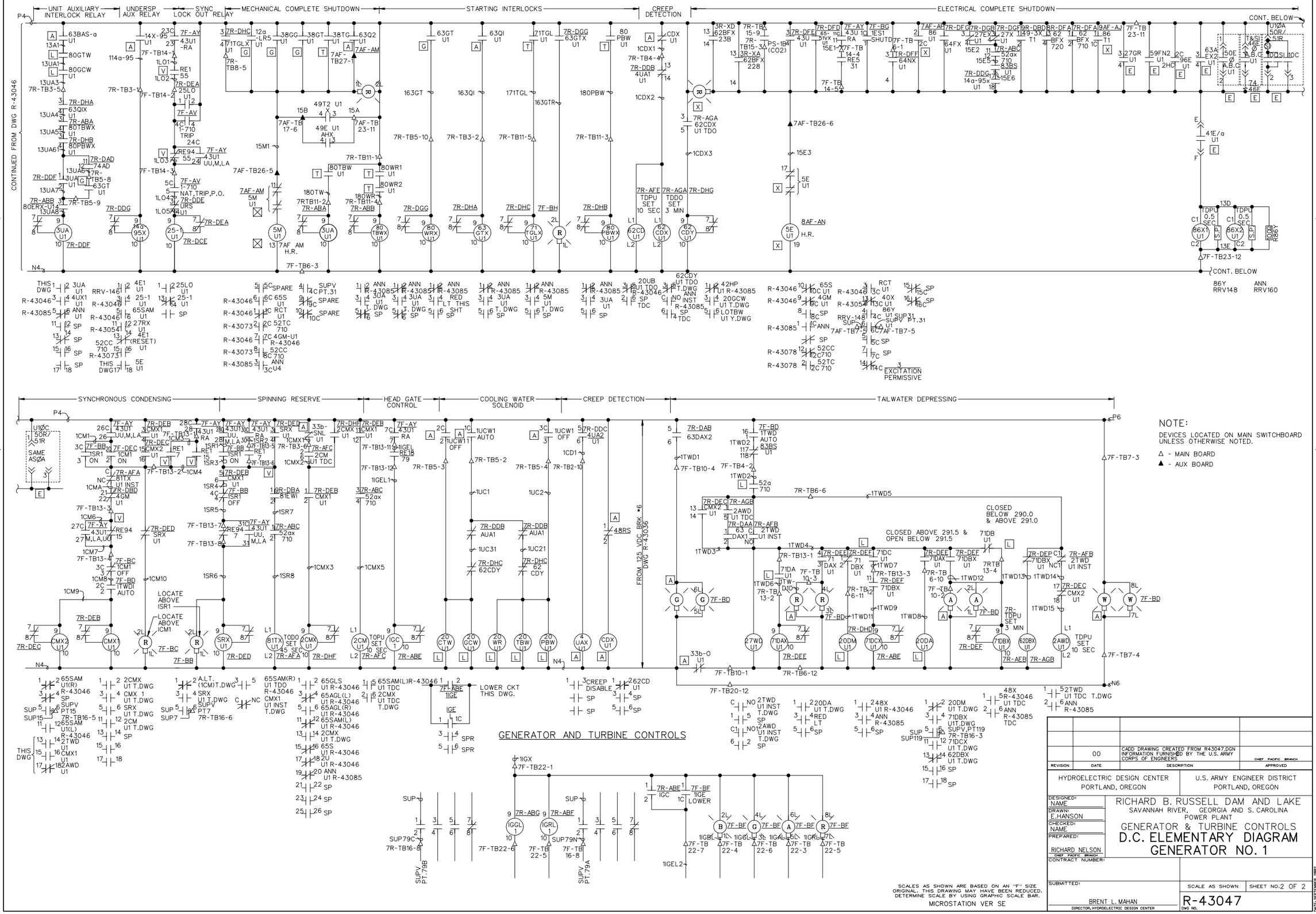
UNIT AUXILIARY INTERLOCK RELAY
UNDERSP AUX RELAY
SYNC LOCK OUT RELAY
MECHANICAL COMPLETE SHUTDOWN
STARTING INTERLOCKS
CREEP DETECTION
ELECTRICAL COMPLETE SHUTDOWN
CONTINUED FROM DWG R-43046
CONT. BELOW
SYNCHRONOUS CONDENSING
SPINNING RESERVE
HEAD GATE CONTROL
COOLING WATER SOLENOID
CREEP DETECTION
TAILWATER DEPRESSING
FROM 125 VDC BRK #6 DWG R-43036
CLOSED BELOW 290.0 & ABOVE 291.0
CLOSED ABOVE 291.5 & OPEN BELOW 291.5
LOCATE ABOVE ISR1
LOCATE ABOVE ICM1
LOWER CKT THIS DWG.
GENERATOR AND TURBINE CONTROLS
NOTE:
DEVICES LOCATED ON MAIN SWITCHBOARD UNLESS OTHERWISE NOTED.
△ - MAIN BOARD
▲ - AUX BOARD
SCALES AS SHOWN ARE BASED ON AN "F" SIZE ORIGINAL. THIS DRAWING MAY HAVE BEEN REDUCED. DETERMINE SCALE BY USING GRAPHIC SCALE BAR.
MICROSTATION VER SE
00 | CADD DRAWING CREATED FROM R43047.DGN INFORMATION FURNISHED BY THE U.S. ARMY CORPS OF ENGINEERS
REVISION | DATE | DESCRIPTION | APPROVED
HYDROELECTRIC DESIGN CENTER PORTLAND, OREGON
U.S. ARMY ENGINEER DISTRICT PORTLAND, OREGON
DESIGNED: NAME
DRAWN: E.HANSON
CHECKED: NAME
PREPARED: RICHARD NELSON
CONTRACT NUMBER:
SUBMITTED: BRENT L. MAHAN
DIRECTOR, HYDROELECTRIC DESIGN CENTER
RICHARD B. RUSSELL DAM AND LAKE
SAVANNAH RIVER, GEORGIA AND S. CAROLINA
POWER PLANT
GENERATOR & TURBINE CONTROLS
D.C. ELEMENTARY DIAGRAM
GENERATOR NO. 1
SCALE AS SHOWN
SHEET NO.2 OF 2
R-43047
DWG NO.
DATE: SEPTEMBER 2002

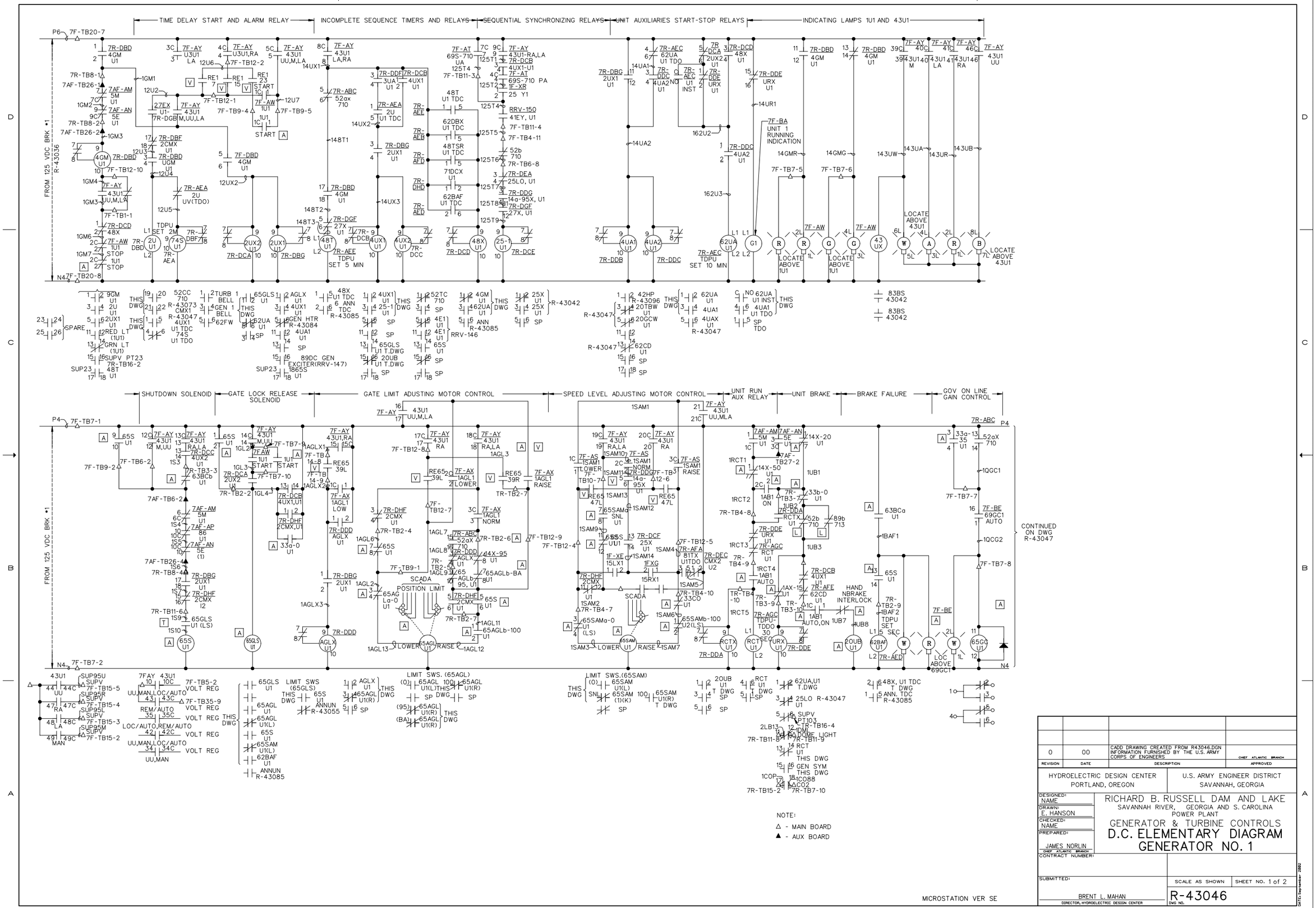
TIME DELAY START AND ALARM RELAY
INCOMPLETE SEQUENCE TIMERS AND RELAYS
SEQUENTIAL SYNCHRONIZING RELAYS
UNIT AUXILIARIES START-STOP RELAYS
INDICATING LAMPS 1U1 AND 43U1
SHUTDOWN SOLENOID
GATE LOCK RELEASE SOLENOID
GATE LIMIT ADUSTING MOTOR CONTROL
SPEED LEVEL ADJUSTING MOTOR CONTROL
UNIT RUN AUX RELAY
UNIT BRAKE
BRAKE FAILURE
GOV ON LINE GAIN CONTROL
FROM 125 VDC BRK #1 R-43036
CONTINUED ON DWG R-43047
NOTE:
△ - MAIN BOARD
▲ - AUX BOARD
MICROSTATION VER SE
0 | 00 | CADD DRAWING CREATED FROM R43046.DGN INFORMATION FURNISHED BY THE U.S. ARMY CORPS OF ENGINEERS
REVISION | DATE | DESCRIPTION | APPROVED
HYDROELECTRIC DESIGN CENTER PORTLAND, OREGON
U.S. ARMY ENGINEER DISTRICT SAVANNAH, GEORGIA
DESIGNED: NAME
DRAWN: E. HANSON
CHECKED: NAME
PREPARED: JAMES NORLIN
CONTRACT NUMBER:
SUBMITTED: BRENT L. MAHAN
RICHARD B. RUSSELL DAM AND LAKE
SAVANNAH RIVER, GEORGIA AND S. CAROLINA
POWER PLANT
GENERATOR & TURBINE CONTROLS
D.C. ELEMENTARY DIAGRAM
GENERATOR NO. 1
SCALE AS SHOWN
SHEET NO. 1 of 2
R-43046
DWG NO.