US Army Corps
of Engineers

Savannah District

HARTWELL MAJOR REHABILITATION – PHASE 2

HARTWELL DAM AND LAKE PROJECT
SAVANNAH RIVER, GEORGIA AND SOUTH CAROLINA
230 kV SWITCHYARD UPGRADE

FY 03
IFB NO. DACW21-03-B-0007

24 Mar, 2003
12:00

1

HAP103G01.DGN

DISTRICT COVER SHEET

...\Har0157\03B07w\HAP103G01.dgn 03/24/2003 12:11:03 PM

INDEX OF DRAWINGS

PLATE NO.	SHEET NO.	CAD FILE NO.	TITLE	
			SWITCHYARD UPGRADE DRAWINGS	
			GENERAL	
G-01	1	HAP103G01	COVER SHEET	
G-02	2	HAP103G02	DRAWING INDEX	SHEET ONE
G-03	3	HAP103G03	DRAWING INDEX	SHEET TWO
G-04	5	HAP103G04	PROJECT LOCATION	AND VICINITY MAP
G-05	4	HAP103G05	PROJECT SITE MAP	AND GENERAL PLAN
G-06	6	HAP103G06	CONTRACTOR STAGING AREA	AND STORAGE PLAN
G-07	7	HAP103G07	WORK LOCATION	POWERHOUSE EL 515.0
G-08	8	HAP103G08	WORK LOCATION	POWERHOUSE EL 498.5
G-09	9	HAP103G09	NOTES AND LEGEND	
G-10	10	HAP103G10	NOMENCLATURE	
			STRUCTURAL	
S-01	11	HAP103S01	STRUCTURAL GENERAL NOTES	
S-02	12	HAP103S02	DEMOLITION	
S-03	13	HAP103S03	FOUNDATION AND TOP STEEL FRAMING PLAN	
S-04	14	HAP103S04	STRUCTURAL DETAILS	SHEET 1
S-05	15	HAP103S05	STRUCTURAL DETAILS	SHEET 2
S-06	16	HAP103S06	STRUCTURAL DETAILS	SHEET 3
			ELECTRICAL	
E-01	17	HAP103E01	MAIN ONE-LINE DIAGRAM	EQUIPMENT REMOVAL
E-02	18	HAP103E02	MAIN ONE-LINE DIAGRAM	NEW EQUIPMENT
E-03	19	HAP103E03	MAIN THREE-LINE, BAYS 2 AND 3	EQUIPMENT REMOVAL
E-04	20	HAP103E04	MAIN THREE-LINE, BAYS 2 AND 3	NEW EQUIPMENT
E-05	21	HAP103E05	MAIN THREE-LINE, BAYS 4 AND 5	EQUIPMENT REMOVAL
E-06	22	HAP103E06	MAIN THREE-LINE, BAYS 4 AND 5	NEW EQUIPMENT
E-07	23	HAP103E07	MAIN THREE-LINE, BAYS 6 AND 7	EQUIPMENT REMOVAL
E-08	24	HAP103E08	MAIN THREE-LINE, BAYS 6 AND 7	NEW EQUIPMENT
E-09	25	HAP103E09	LINE METERING THREE-LINE DIAGRAM	EQUIPMENT REMOVAL
E-10	26	HAP103E10	LINE METERING THREE-LINE DIAGRAM	NEW EQUIPMENT
E-11	27	HAP103E11	XFMR METERING THREE-LINE DIAGRAM	EQUIPMENT REMOVAL
E-12	28	HAP103E12	XFMR METERING THREE-LINE DIAGRAM	NEW EQUIPMENT
E-13	29	HAP103E13	LINE AND BUS RELAYING	EQUIPMENT REMOVAL
E-14	30	HAP103E14	LINE AND BUS RELAYING	NEW EQUIPMENT
E-15	31	HAP103E15	TRANSFORMER RELAYING, SH.1	EQUIPMENT REMOVAL
E-16	32	HAP103E16	TRANSFORMER RELAYING, SH.2	EQUIPMENT REMOVAL
E-17	33	HAP103E17	TRANSFORMER RELAYING, SH.1	NEW EQUIPMENT
E-18	34	HAP103E18	TRANSFORMER RELAYING, SH.2	NEW EQUIPMENT
E-19	35	HAP103E19	BREAKER SYNCHRONIZING SCHEMATIC	EQUIPMENT REMOVAL
E-20	36	HAP103E20	BREAKER SYNCHRONIZING SCHEMATIC	NEW EQUIPMENT
E-21	37	HAP103E21	BREAKER & MOD SCHEMATICS, SH.1	EQUIPMENT REMOVAL
E-22	38	HAP103E22	BREAKER & MOD SCHEMATICS, SH.2	EQUIPMENT REMOVAL
E-23	39	HAP103E23	BREAKER CONTROL SCHEMATICS, SH.1	NEW EQUIPMENT
E-24	40	HAP103E24	BREAKER CONTROL SCHEMATICS, SH.2	NEW EQUIPMENT
E-25	41	HAP103E25	ANNUNCIATOR SCHEDULE	EQUIPMENT REMOVAL
E-26	42	HAP103E26	ANNUNCIATOR SCHEDULE	NEW EQUIPMENT
E-27	43	HAP103E27	MAIN CONTROL BOARD	EQUIPMENT REMOVAL
E-28	44	HAP103E28	MAIN CONTROL BOARD	NEW EQUIPMENT
E-29	45	HAP103E29	MAIN RELAY BOARD	EQUIPMENT REMOVAL
E-30	46	HAP103E30	MAIN RELAY BOARD	NEW EQUIPMENT
E-31	47	HAP103E31	RECORDER BOARD	EQUIPMENT REMOVAL
E-32	48		NOT USED	
E-33	49		NOT USED	
E-34	50		NOT USED	

PLATE NO.	SHEET NO.	CAD FILE NO.	TITLE	
E-35	51	HAP103E35	BREAKERS NO. 118 AND 128	CT CONNECTIONS
E-36	52	HAP103E36	BREAKERS NO. 238 AND 248	CT CONNECTIONS
E-37	53	HAP103E37	BREAKERS NO. 218 AND 228	CT CONNECTIONS
E-38	54	HAP103E38	BREAKERS NO. 338 AND 348	CT CONNECTIONS
E-39	55	HAP103E39	BREAKERS NO. 438 AND 448	CT CONNECTIONS
E-40	56	HAP103E40	BREAKERS NO. 318 AND 328	CT CONNECTIONS
E-41	57	HAP103E41	SWITCHYARD PLAN	EXISTING CONFIGURATION
E-42	58	HAP103E42	SWITCHYARD PLAN	NEW CONFIGURATION
E-43	59	HAP103E43	SWITCHYARD WORK SEQUENCE	PHASE 1 - PHASE 8
E-44	60	HAP103E44	SWYD BAYS 2, 4, 7	EQUIPMENT REMOVAL
E-45	61	HAP103E45	SWYD BAYS 2, 4, 7	NEW EQUIPMENT
E-46	62	HAP103E46	SWITCHYARD BAY 3	EQUIPMENT REMOVAL
E-47	63	HAP103E47	SWITCHYARD BAY 3	NEW EQUIPMENT
E-48	64	HAP103E48	SWITCHYARD BAYS 5, 6	EQUIPMENT REMOVAL
E-49	65	HAP103E49	SWITCHYARD BAYS 5, 6	NEW EQUIPMENT
E-50	66		NOT USED	
E-51	67		NOT USED	
E-52	68	HAP103E52	BAY 3 LINE 2	EXISTING AND NEW EQUIPMENT
E-53	69	HAP103E53	BAYS 5 AND 6, LINES 2 AND 3	EXISTING AND NEW EQUIPMENT
E-54	70	HAP103E54	VIEWS AND DETAILS	SHEET ONE
E-55	71	HAP103E55	VIEWS AND DETAILS	SHEET TWO
E-56	72	HAP103E56	SWITCHYARD TUNNEL	CONDUIT ROUTING
E-57	73	HAP103E57	BAY TWO	CONDUIT ROUTING
E-58	74	HAP103E58	BAY THREE	CONDUIT ROUTING
E-59	75	HAP103E59	BAY FOUR	CONDUIT ROUTING
E-60	76	HAP103E60	BAY FIVE	CONDUIT ROUTING
E-61	77	HAP103E61	BAY SIX	CONDUIT ROUTING
E-62	78	HAP103E62	BAY SEVEN	CONDUIT ROUTING
E-63	79		NOT USED	
E-64	80		NOT USED	
E-65	81	HAP103E65	KIRK KEY INTERLOCK DIAGRAM	
E-66	82	HAP103E66	SWITCHYARD GROUNDING PLAN	
E-67	83	HAP103E67	SWITCHYARD POWER	480 / 208 VAC TRANSFORMER
E-68	84	HAP103E68	PANELS 6F & 6R	CONNECTION DIAGRAMS
E-69	85	HAP103E69	PANELS 5F & 5R	CONNECTION DIAGRAMS
E-70	86	HAP103E70	PANELS 4F & 4R	CONNECTION DIAGRAMS
E-71	87	HAP103E71	PANELS 3F & 3R	CONNECTION DIAGRAMS
E-72	88	HAP103E72	PANELS 2F & 2R	CONNECTION DIAGRAMS
E-73	89	HAP103E73	PANELS 1F & 1R	CONNECTION DIAGRAMS
E-74	90	HAP103E74	CONDUIT AND CABLE SCHEDULE	SHEET 1
E-75	91	HAP103E75	CONDUIT AND CABLE SCHEDULE	SHEET 2
E-76	92	HAP103E76	CONDUIT AND CABLE SCHEDULE	SHEET 3
E-77	93	HAP103E77	CONDUIT AND CABLE SCHEDULE	SHEET 4
E-78	94	HAP103E78	CONDUIT AND CABLE SCHEDULE	SHEET 5
E-79	95	HAP103E79	CONDUIT AND CABLE SCHEDULE	SHEET 6
E-80	96	HAP103E80	CONDUIT AND CABLE SCHEDULE	SHEET 7
E-81	97	HAP103E81	CONDUIT AND CABLE SCHEDULE	SHEET 8
E-82	98	HAP103E82	CONDUIT AND CABLE SCHEDULE	SHEET 9
E-83	99	HAP103E83	CONDUIT AND CABLE SCHEDULE	SHEET 10
E-84	100	HAP103E84	CONDUIT AND CABLE SCHEDULE	SHEET 11
E-85	101	HAP103E85	CONDUIT AND CABLE SCHEDULE	SHEET 12
E-86	102	HAP103E86	CONDUIT AND CABLE SCHEDULE	SHEET 13
E-87	103	HAP103E87	CONDUIT AND CABLE SCHEDULE	SHEET 14
E-88	104	HAP103E88	CONDUIT AND CABLE SCHEDULE	SHEET 15
E-89	105	HAP103E89	CONDUIT AND CABLE SCHEDULE	SHEET 16
E-90	106	HAP103E90	CONDUIT AND CABLE SCHEDULE	SHEET 17
E-91	107	HAP103E91	CONDUIT AND CABLE SCHEDULE	SHEET 18
E-92	108	HAP103E92	CONDUIT AND CABLE SCHEDULE	SHEET 19

SECTION SYMBOLS

SECTIONS OR ELEVATIONS REFERING TO A DRAWING IN SAME SERIES OF DRAWINGS IS SHOWN THUS:

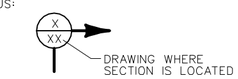

SECTION OR ELEVATION SHOWN ON SAME DRAWING IS SHOWN THUS:

MATERIAL INDICATIONS

- EARTH (ORIGINAL GRADE)
- EARTH (COMPACTED FILL)
- GRAVEL
- MORTAR - CEMENT - PLASTER - STUCCO
- CONCRETE MASONRY UNITS (C.M.U., SMALL SCALE - PLAN)
- CONCRETE MASONRY UNITS (C.M.U., LARGE SCALE - SECTION)
- CONCRETE MASONRY UNITS OR HOLLOW TILE (SMALL SCALE - SECTION)
- METAL (ELEVATION)
- STEEL (CROSS SECTION)
- INSULATION (RIGID)
- INSULATION (LOOSE OR BATT)
- BRICK
- WOOD (BLOCKING)
- WOOD (FINISH)
- CONCRETE

STANDARD ABBREVIATIONS

A
A.C. AIR CONDITIONED
A.D. AREA DRAIN
A.H.U. AIR HANDLING UNIT
ALT. ALTERNATE
ALUM. ALUMINUM
AMP., A. AMPERES
A.O. ACCESS OPENING
APPROX. APPROXIMATELY
ARCH. ARCHITECTURAL
A.T. ASPHALT TILE
A.T.C. ACOUSTIC TILE CEILING

B
BAL. BALANCE
BD. BOARD
BLDG. BUILDING
BLK. BLANK
BM. BEAM
BOT. BOTTOM
BRG. BEARING
B.T.U.H. BRITISH THERMO UNIT/HOUR

C
CAB. CABINET
CAP. CAPACITY
C/B CIRCUIT BREAKER
C.D. CEILING DIFFUSER
CEM. CEMENT
CER. CERAMIC
C.F.M. CUBIC FEET/MINUTE
CIRC. CIRCULATING
C.J. CONTROL JOINT
CK'D CHECKERED
CKT. CIRCUIT
℄ CENTER LINE
CEIL. CEILING
CL. CLOSET
C.M.U. CONCRETE MASONRY UNIT
C.O. CLEAN OUT
COL. COLUMN
CONC. CONCRETE
COND. CONDENSATE
CONN. CONNECTION
CONST. CONSTRUCTION
CONT. CONTINUOUS
CONTR. JT. CONTRACTION JOINT
C.T. CERAMIC TILE
C.T.B. CERAMIC TILE BASE
C. TO C. CENTER TO CENTER

D
DET. DETAIL
DIA. DIAMETER
DIFF. DIFFUSER
DIM. DIMENSION
DISC. DISCONNECT
D.J. DUMMY JOINT
DN. DOWN
DR. DRAIN
D.S. DOWN SPOUT
DWG.(S) DRAWING(S)

E
EA. EACH
E.C. EMPTY CONDUIT
E.F. EXHAUST FAN
EL. ELEVATION
ELEC. ELECTRIC
EQUIP. EQUIPMENT
E.W.C. ELECTRIC WATER COOLER
EXH. EXHAUST
EXP. JT. EXPANSION JOINT
EXT. EXTERIOR
EXIST. EXISTING

F
F.A. FIRE ALARM
F.C. FLEXIBLE CONNECTION
F.D. FLOOR DRAIN
F.E.C. FIRE EXTINGUISHER CABINET
FIN. FINISH
FL. FLOOR
FT. FOOT, FEET
FTG. FOOTING

G
GA. GAGE
GAL. GALLON
GALV. GALVANIZED
G.F.E. GOVERNMENT FURNISHED EQUIPMENT
GL. GLASS
GND. GROUND
GOV'T GOVERNMENT
G.P.H. GALLONS/HOUR
G.P.M. GALLONS/MINUTE
GR. GRILLE
G.W.B. GYPSUM WALL BOARD
GYP. GYPSUM

H
H. HIGH
H.B. HOSE BIBB
H.C. HOLLOW CORE
HT. HEIGHT
H.M. HOLLOW METAL
H.P. HORSE POWER
HR. HOUR
HTG. HEATING
HTR. HEATER
H.&V. HEATING AND VENTILATING
HW. HARDWARE
HYD. HYDRANT

I
I.D. INSIDE DIAMETER
I.E. INVERT ELEVATION
IN. INCHES
INCAND. INCANDESCENT
INSUL. INSULATION
INT. INTERIOR

J
J.B. JUNCTION BOX
JCT. JUNCTION
JT. JOINT

K
KVA KILOVOLT AMPERE
KW KILOWATT

L
LB.,* POUND
LG. LONG
L.P. LIGHTING PANEL
LTG. LIGHTING

M
M. MOTOR
MAINT. MAINTENANCE
MAX. MAXIMUM
M.D.P. MAIN DISTRIBUTION PANEL
MECH. MECHANICAL
MTL. METAL
MIN. MINIMUM
MISC. MISCELLANEOUS
M.O. MASONRY OPENING
M.T. METAL THRESHOLD
MTD. MOUNTED
MTG. MOUNTING
M.V. MECHANICAL VENTILATION
M.G.T. MATT GLAZE TILE

N
N.A. NOT APPLICABLE
N.I.C. NOT IN CONTRACT
NO. NUMBER

O
O.A. OUTDOOR AIR
O.C. ON CENTER
O.D. OUTSIDE DIAMETER
OH. OVERHEAD
OL. OVERLOAD
OPNG. OPENING
OPP. OPPOSITE
O.S.D. OPEN SIGHT DRAIN

P
P. PAPER
PART. PARTITION
PER. PERIMETER
ℙ, PL. PLATE
PLBG. PLUMBING
PLYW'D PLYWOOD
PNL. PANEL
PRESS. PRESSURE
PSF POUNDS/SQUARE FOOT
PSI POUNDS/SQUARE INCH
PSIG POUNDS/SQUARE INCH GAGE
PT. POINT
PTD. PAINTED

Q
QTR. QUARTER
QUAN. QUANTITY

R
R. RISER
R.A. RETURN AIR
RAD. RADIUS
RD. ROUND
REC'D. RECESSED
RECIRC. RECIRCULATING
RECP. RECEPTACLE
REG. REGISTER
REINF. REINFORCING
REQ. REQUIRED
RET. RETURN
R.G. RETURN GRILLE
RM. ROOM
R.P.M. REVOLUTION/MINUTE

S
S. SUPPLY
S.A. SUPPLY AIR
SCH. SCHEDULE
SECT. SECTION
SERV. SERVICE
SHT. SHEET
S.J. SLIP JOINT
SPEC. SPECIFICATIONS
SQ. FT. SQUARE FEET
ST. STEEL
STOR. STORAGE
STRUC. STRUCTURAL
SUSP. SUSPENDED
SW. SWITCH

T
T. TOILET
TEL. TELEPHONE
TEMP. TEMPERATURE
THK. THICKNESS
THD. THRESHOLD
TOIL. TOILET
TYP. TYPICAL

V
V. VOLT
V.A.T. VINYL ASBESTOS TILE
VENT. VENTILATION
VERT. VERTICAL
VTR VENT THRU ROOF

W
W. WATT
W/ WITH
WD. WOOD
W.D. WINDOW DIMENSION
WF WIDE FLANGE
W.G. WATER GAGE
WP. WEATHERPROOF
WTR.
W.W.F. WELDED WIRE FABRIC

SYMBOL	ZONE	DESCRIPTION	DATE	BY
		REVISIONS		

HYDROELECTRIC DESIGN CENTER
PORTLAND, OR

U.S. ARMY ENGINEER DISTRICT
CORPS OF ENGINEERS
SAVANNAH, GEORGIA

HARTWELL MAJOR REHABILITATION - PHASE 2
HARTWELL DAM AND LAKE
SWITCHYARD UPGRADE
DRAWING INDEX
SHEET 1
SAVANNAH RIVER GEORGIA AND S. CAROLINA

SIZE	SOLICITATION NO.	FILE NO.	PLATE
F	DACW21-03-B-0007	HAR0157	G-02

SCALE: NONE SHEET 2

HAP103TB.DGN HAP103G02.DGN

...\Har0157\03B07w\HAP103G02.DGN 03/24/2003 12:11:38 PM

INDEX OF DRAWINGS (CONTINUATION)

PLATE NO.	SHEET NO.	CAD FILE NO.	TITLE	
			REFERENCE DRAWINGS	
			ARRANGEMENT	
R-1	109	HA5A-405.1	PLAN EL. 498.5	SHEET 1
R-2	110	HA5E-264	PLAN EL. 498.5	
R-3	111	HA5A-407.1	PLAN EL. 512 AND 515	SHEET 1
			ELECTRICAL	
R-4	112	HA5E-007.3	CONTROL SCHEMATICS	GENERATING UNITS 1-4 AND XFMR'S
R-5	113	HA5E-009.3	SWITCHYARD SCHEMATIC DIAGRAM	
R-6	114	HA5E-010.7	STATION SERVICE	CONTROL SCHEMATIC DIAGRAM
R-7	115	HA5E-014.2	GENERATOR FULL LINE DIAGRAM	
R-8	116	HA5E-015.2	MAIN AND AUXILIARY TRANSFORMER	FULL LINE DIAGRAM
R-9	117	HA5E-017.2	ANNUNCIATOR SCHEMATIC DIAGRAM	
R-10	118	HA5E-210.6	125 VDC AND 120 VAC SINGLE PHASE	DISTRIBUTION SWITCHBOARD
R-11	119	HA5E-211.4	PROJECT OFFICE TRANS. AND SWITCHGEAR	& LOAD CENTERS
R-12	120	HA5E-219.1	SPREADING ROOM TRAY ARRANGEMENT	SHEET 1
R-13	121	HA5E-220.1	SPREADING ROOM TRAY ARRANGEMENT	SHEET 2
R-14	122	HA5E-221.1	SPREADING ROOM TRAY ARRANGEMENT	SHEET 3
R-15	123	HA5E-227.1	CABLE TUNNEL TO SWITCHYARD	TRAY ARRANGEMENT-SHEET 1
R-16	124	HA5E-228.1	CABLE TUNNEL TO SWITCHYARD	TRAY ARRANGEMENT-SHEET 2
R-17	125	HA5E-229.1	CABLE TUNNEL TO SWITCHYARD	TRAY ARRANGEMENT-SHEET 3
R-18	126	HA5E-348	125 VDC AND 120 VAC SINGLE PHASE	ONE LINE DIAGRAM
R-19	127	HA5E-349	GENERATOR NO. 5 AND XFMR NO. 3	SCHEMATIC DIAGRAM SHEET 1
R-20	128	HA5E-352	BREAKER SYNCHRONIZING	SCHEMATIC DIAGRAM
R-21	129	HA5E-356	ANNUNCIATOR SCHEMATIC DIAGRAM	UNITS 1-4
R-22	130	HA5E-357	ANNUNCIATOR SCHEMATIC DIAGRAM	UNIT 5
R-23	131	HA5E-365	RECORDER BOARD	
R-24	132	HA5E-366	MAIN CONTROL SWITCHBOARD	
R-25	133	HA5E-368	GEN., EXCITER AND MISC., TERM.	BOX CONNECTION DIAGRAM
R-26	134	HA5E-372	MISC. EXTERNAL CONNECTIONS	
R-27	135	HA5E-373	TRANSFORMER NO. 3 SWITCHBOARD	EXTERNAL CONNECTIONS
R-28	136	HA5E-376	FULL LINE DIAGRAM SWITCHYARD	
R-29	137	HA5E-377	GENERAL ARRANGEMENT SWITCHYARD	
R-30	138	HA5E-382	SWITCHYARD EXTERNAL CONNECTIONS	
R-31	139	HA5E-413.1	MAIN ONE LINE DIAGRAM	
R-32	140	HA6E-004.2	CONNECTION AND WIRING DIAGRAM	OCB'S AND MOD'S
R-33	141	HA6E-005.1	CONNECTION AND WIRING DIAGRAM	PTS, CTS, COUP. CAP, & MISC. EQUIP.
R-34	142	lcb2&hcb-3	LCB II AND HCB	DC ELEMENTARY
R-35	143	lcb2&hcb-5	LINE 2 REAR SWITCHBOARD PANEL	WIRING DIAGRAM
			KIRKHOF ELECTRIC CO.	
R-36	144	E1591, SH.11	SCHEMATIC DIAGRAM	230 KV SWITCHYARD
R-37	145	E1592, SH.16	WIRING DIAGRAM LINE NO. 3	PANELS 3F & 3R
R-38	146	E1592, SH.17	WIRING DIAGRAM TRANSFORMER BANK NO. 2	PANELS 4F & 4R
R-39	147	E1592, SH.18	WIRING DIAGRAM LINE NO. 2	PANELS 5F & 5R
R-40	148	E1592, SH.19	WIRING DIAGRAM TRANSFORMER BANK NO. 1	PANELS 6F & 6R
			UNIT ELECTRIC CONTROL INC.	
R-41	149	7569C-1	NO. 4 LINE RELAY PANEL	
R-42	150	7569C-2	NO. 4 LINE RELAY PANEL	A.C. ELEMENTARY WIRING DIAGRAM
R-43	151	7569C-3	NO. 4 LINE RELAY PANEL	D.C. ELEMENTARY WIRING DIAGRAM
R-44	152	7569C-4	NO. 4 LINE RELAY PANEL	WIRING DIAGRAM 2F
R-45	153	7569C-5	NO. 4 LINE RELAY PANEL	WIRING DIAGRAM 2R
			WASHINGTON ELECTRIC CONTROLS, INC.	
R-46	154	81223-S, SH. 2	TRANSFORMER NO. 3	THREE LINE DIAGRAM
R-47	155	81223-S, SH. 3	GEN. NO. 5 & TRANSF. NO. 3	DC SCHEMATIC - SHEET 1
R-48	156	81223-S, SH. 4	GEN. NO. 5 & TRANSF. NO. 3	DC SCHEMATIC - SHEET 2
R-49	157	81223-S, SH. 13	OCB 318 & 328	THREE LINE DIAGRAM
			STRUCTURAL	
R-50	158	HA2C-022.4	PROJECT LOCATION AND SITE MAP	
R-51	159	HA5C-005.1	GENERAL, YARD - SHEET 1	
R-52	160	HA5S-108	CABLE TUNNEL - OUTLINE, SHEET 2	
R-53	161	HA6S-001.1	SWITCHYARD, FOOTING LOCAITON PLAN	AND DETAILS
R-54	162	HA6S-001.2	SWITCHYARD FOOTING AND	MISCELLANEOUS STRUCTURE DETAILS
R-55	163	HA6S-301.2	SWITCHYARD, STRUCTURAL STEEL - SHEET 1	
R-56	164	HA6S-304.1	SWITCHYARD, STRUCTURAL STEEL - SHEET 4	
R-57	165	HA6S-305.1	SWITCHYARD, STRUCTURAL STEEL - SHEET 5	

SYMBOL	ZONE	DESCRIPTION	DATE	BY
		REVISIONS		

HYDROELECTRIC DESIGN CENTER
PORTLAND, OR

U.S. ARMY ENGINEER DISTRICT
CORPS OF ENGINEERS
SAVANNAH, GEORGIA

HARTWELL MAJOR REHABILITATION - PHASE 2
HARTWELL DAM AND LAKE
SWITCHYARD UPGRADE
DRAWING INDEX
SHEET 2
SAVANNAH RIVER GEORGIA AND S. CAROLINA

SIZE	SOLICITATION NO.	FILE NO.	PLATE
F	DACW21-03-B-0007	HAR0157	G-03

SCALE: NONE SHEET 3

102TBLK.HAP HAP103G03.DGN

...\Har0157\03B07w\HAP103G03.DGN 03/24/2003 12:12:20 PM

HARTWELL DAM PROJECT

SAVANNAH RIVER, GEORGIA AND SOUTH CAROLINA

230 kV SWITCHYARD UPGRADE

US Army Corps of Engineers
Savannah District

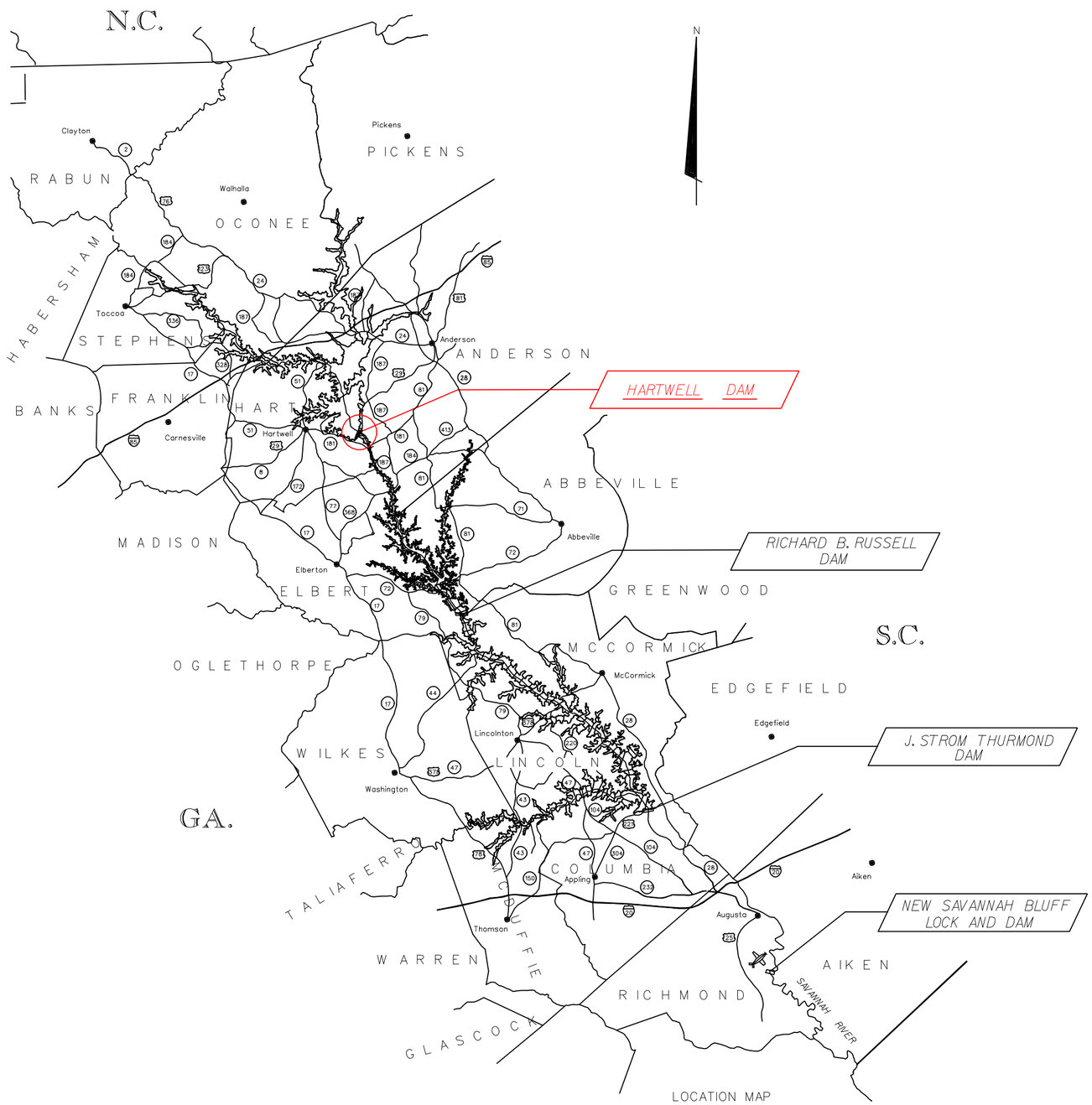

LOCATION MAP

NOT TO SCALE

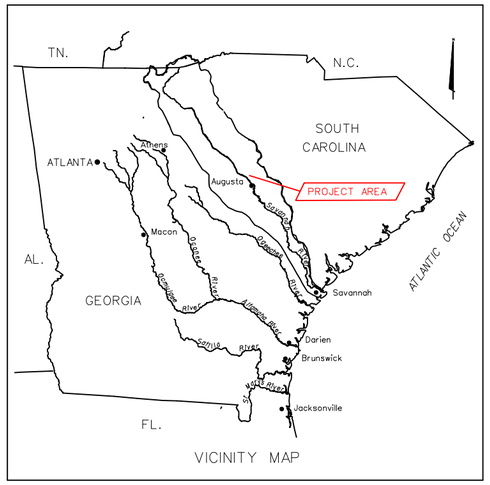

VICINITY MAP

NOT TO SCALE

SYMBOL	ZONE	DESCRIPTION	DATE	BY

REVISIONS

HYDROELECTRIC DESIGN CENTER
PORTLAND, OR

U.S. ARMY ENGINEER DISTRICT
CORPS OF ENGINEERS
SAVANNAH, GEORGIA

HARTWELL MAJOR REHABILITATION - PHASE 2
HARTWELL DAM AND LAKE
SWITCHYARD UPGRADE
PROJECT LOCATION
AND VICINITY MAP
SAVANNAH RIVER GEORGIA AND S. CAROLINA

SIZE	SOLICITATION NO.	FILE NO.	PLATE
F	DACW21-03-B-0007	HAR0157	G-04

SCALE: NONE SHEET 4

11-Feb-2002
06:38:00

HAP103TB.DGN HAP103G04.DGN

...\Har0157\03B07w\HAP103G04.dgn 03/24/2003 12:12:52 PM

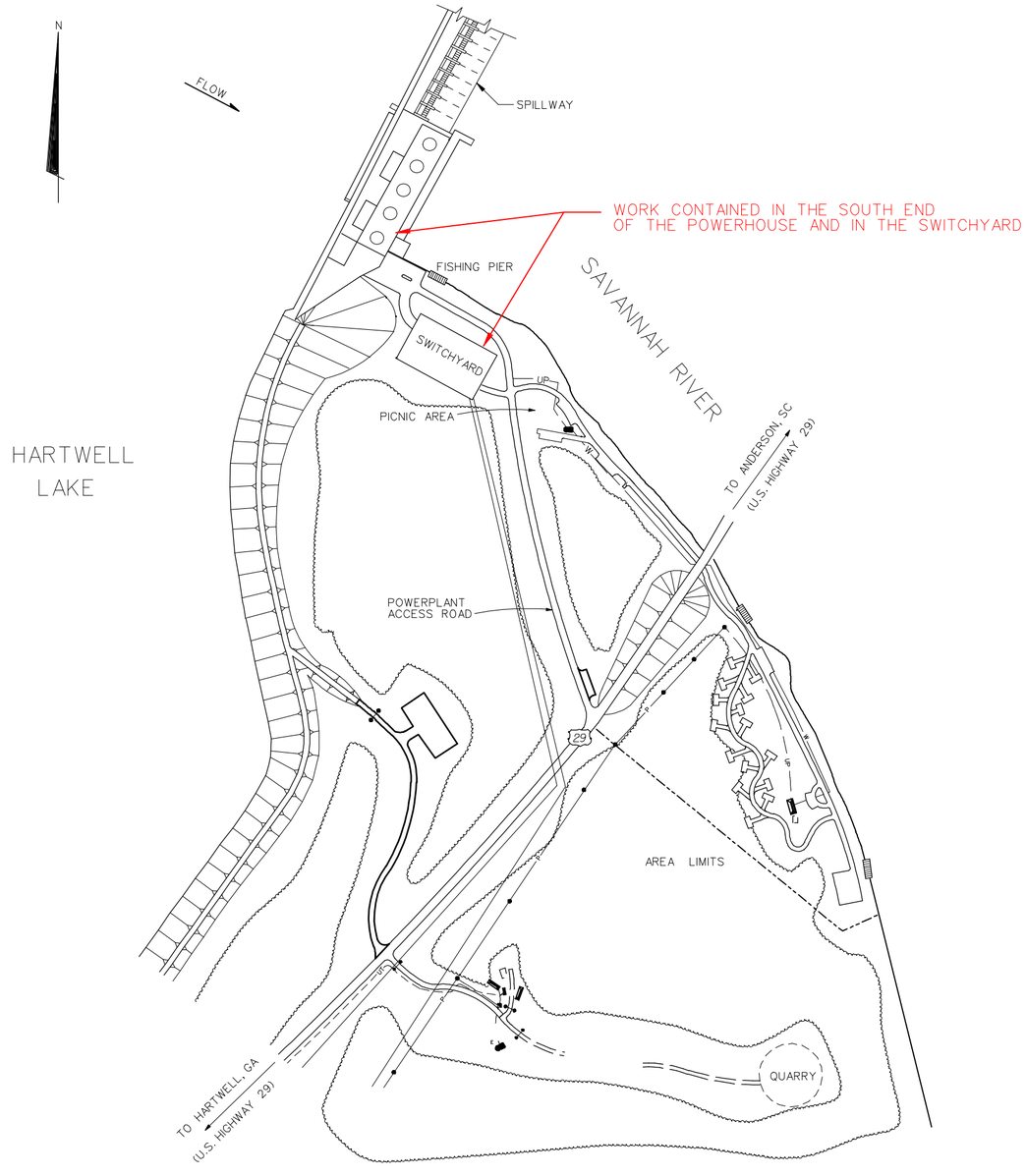

SITE MAP

SCALE: 1" = 200'

200' 0 200'

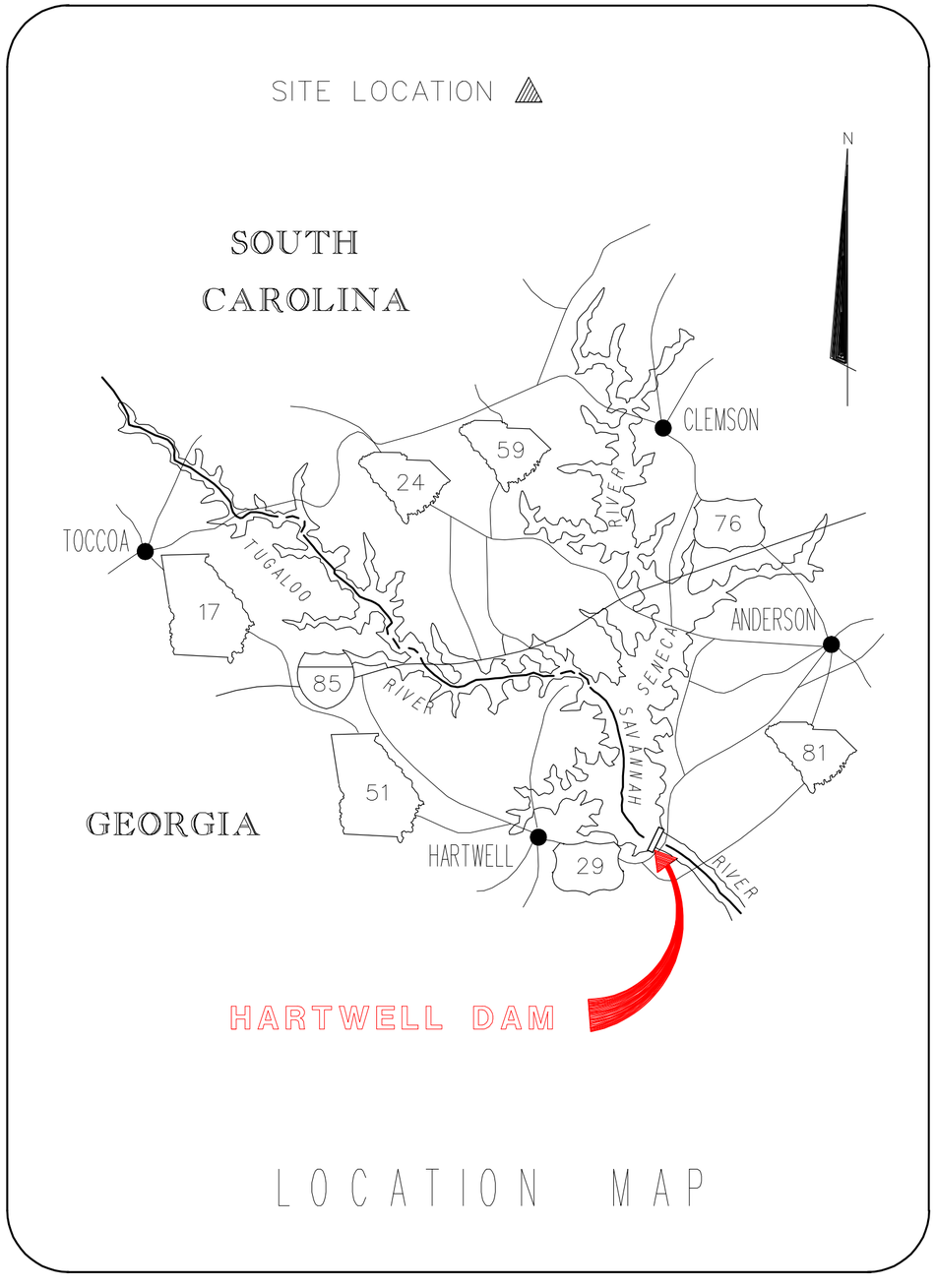

LOCATION MAP

SYMBOL	ZONE	DESCRIPTION	DATE	BY

REVISIONS

HYDROELECTRIC DESIGN CENTER
PORTLAND, OR

U.S. ARMY ENGINEER DISTRICT
CORPS OF ENGINEERS
SAVANNAH, GEORGIA

HARTWELL MAJOR REHABILITATION - PHASE 2
HARTWELL DAM AND LAKE
SWITCHYARD UPGRADE
PROJECT SITE MAP
AND GENERAL PLAN
SAVANNAH RIVER GEORGIA AND S. CAROLINA

SIZE	SOLICITATION NO.	FILE NO.	PLATE
F	DACW21-03-B-0007	HAR0157	G-05

SCALE: SHEET 5

HAP103TB.DGN HAP103G05.DGN

11-Feb-2002
08:44:43

...\Har0157\03B07w\HAP103G05.DGN 03/24/2003 12:13:54 PM

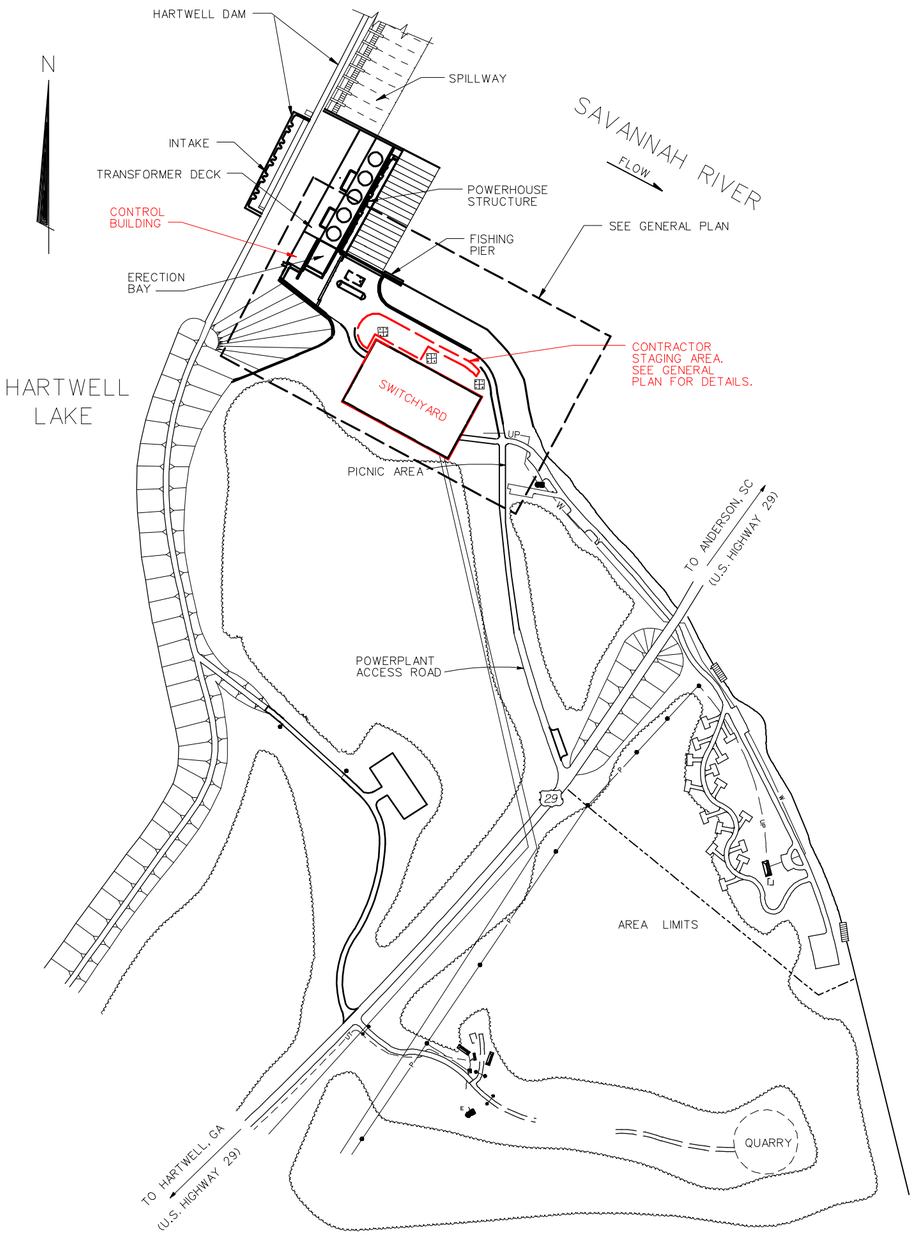

SITE MAP

SCALE: 1" = 200'

200' 0 200'

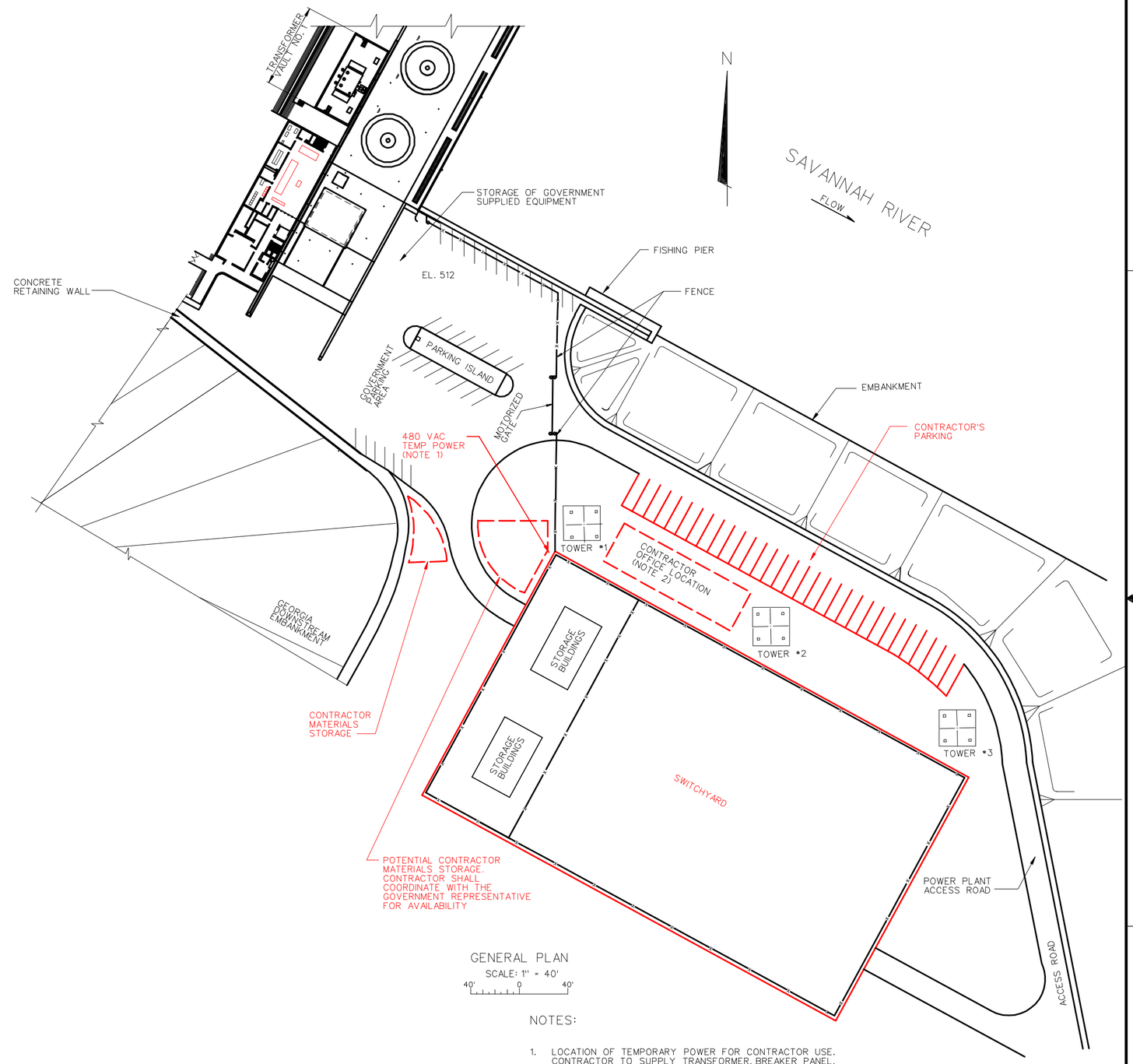

GENERAL PLAN

SCALE: 1" = 40'

40' 0 40'

NOTES:

1. LOCATION OF TEMPORARY POWER FOR CONTRACTOR USE. CONTRACTOR TO SUPPLY TRANSFORMER, BREAKER PANEL, 460 VAC, 30 A., 3-PHASE.

2. EXACT LOCATION OF CONTRACTOR EQUIPMENT SHALL BE COORDINATED WITH THE COR.

SYMBOL	ZONE	DESCRIPTION	DATE	BY

REVISIONS

HYDROELECTRIC DESIGN CENTER
PORTLAND, OR

U.S. ARMY ENGINEER DISTRICT
CORPS OF ENGINEERS
SAVANNAH, GEORGIA

HARTWELL MAJOR REHABILITATION - PHASE 2
HARTWELL DAM AND LAKE
SWITCHYARD UPGRADE

CONTRACTOR STAGING AREA
AND STORAGE PLAN

SAVANNAH RIVER GEORGIA AND S. CAROLINA

SIZE	SOLICITATION NO.	FILE NO.	PLATE
F	DACW21-03-B-0007	HAR0157	G-06

SCALE: SHEET 6

25 Feb 2003
10:04:10

HAP103TB.DGN HAP103G06.DGN

...\Har0157\03B07w\HAP103G06.DGN 03/24/2003 12:14:42 PM

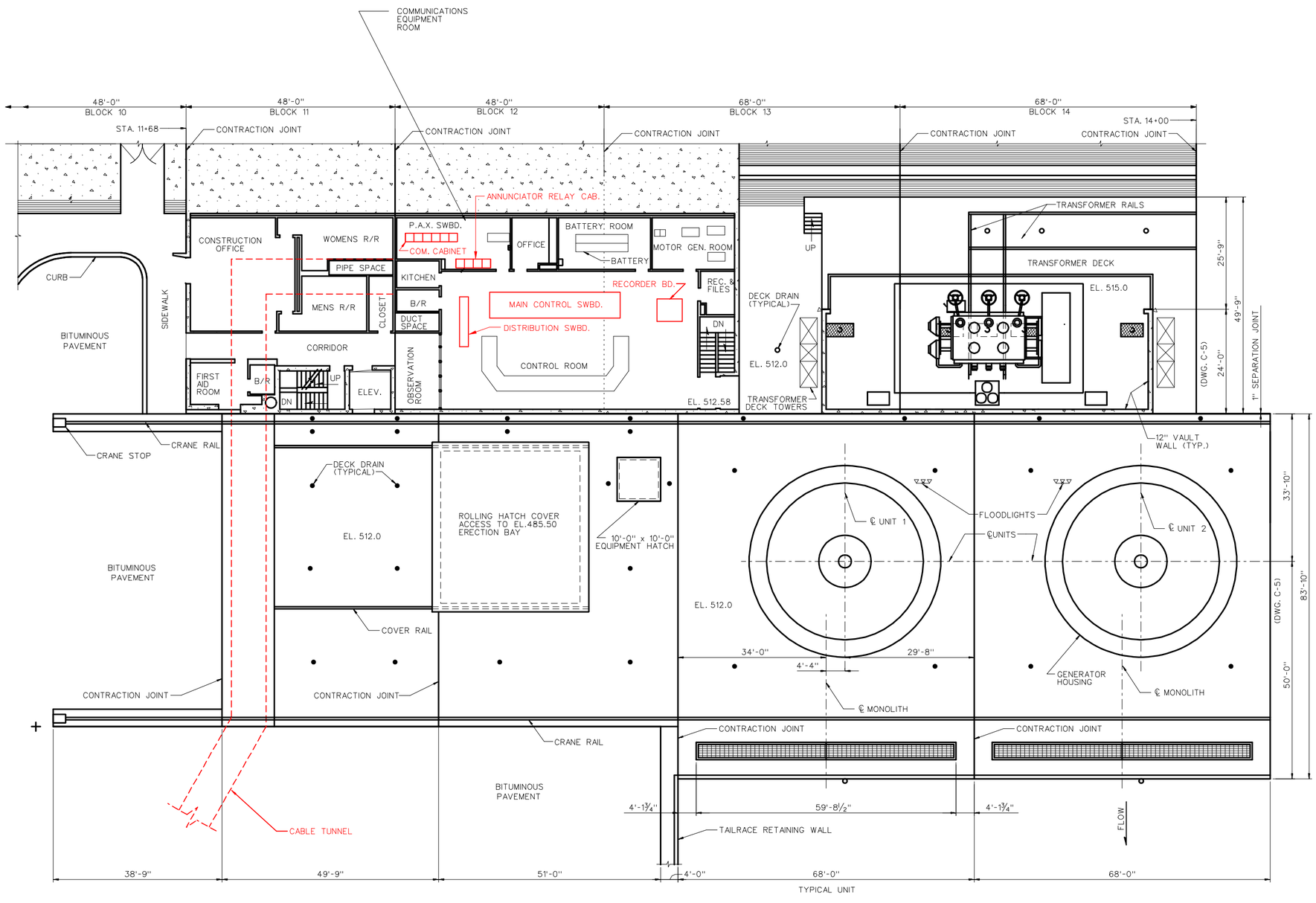

PLAN EL. 512.0 & 515.0
INDICATED WORK AREAS

SCALE: 1" = 10'

10' 0 10'

NOTES:

1. RED COLOR ON THIS DRAWING IDENTIFIES AREAS WHERE WORK UNDER THIS CONTRACT SHALL TAKE PLACE.

SYMBOL	ZONE	DESCRIPTION	DATE	BY
		REVISIONS		

HYDROELECTRIC DESIGN CENTER
PORTLAND, OR

U.S. ARMY ENGINEER DISTRICT
CORPS OF ENGINEERS
SAVANNAH, GEORGIA

HARTWELL MAJOR REHABILITATION - PHASE 2
HARTWELL DAM AND LAKE
SWITCHYARD UPGRADE
WORK LOCATION
POWERHOUSE EL 515.0
SAVANNAH RIVER GEORGIA AND S. CAROLINA

SIZE	SOLICITATION NO.	FILE NO.	PLATE
F	DACW21-03-B-0007	HAR0157	G-07

SCALE: SHEET 7

HAP103TB.DGN HAP103G07.DGN

...\Har0157\03B07w\HAP103G07.DGN 03/24/2003 12:15:22 PM

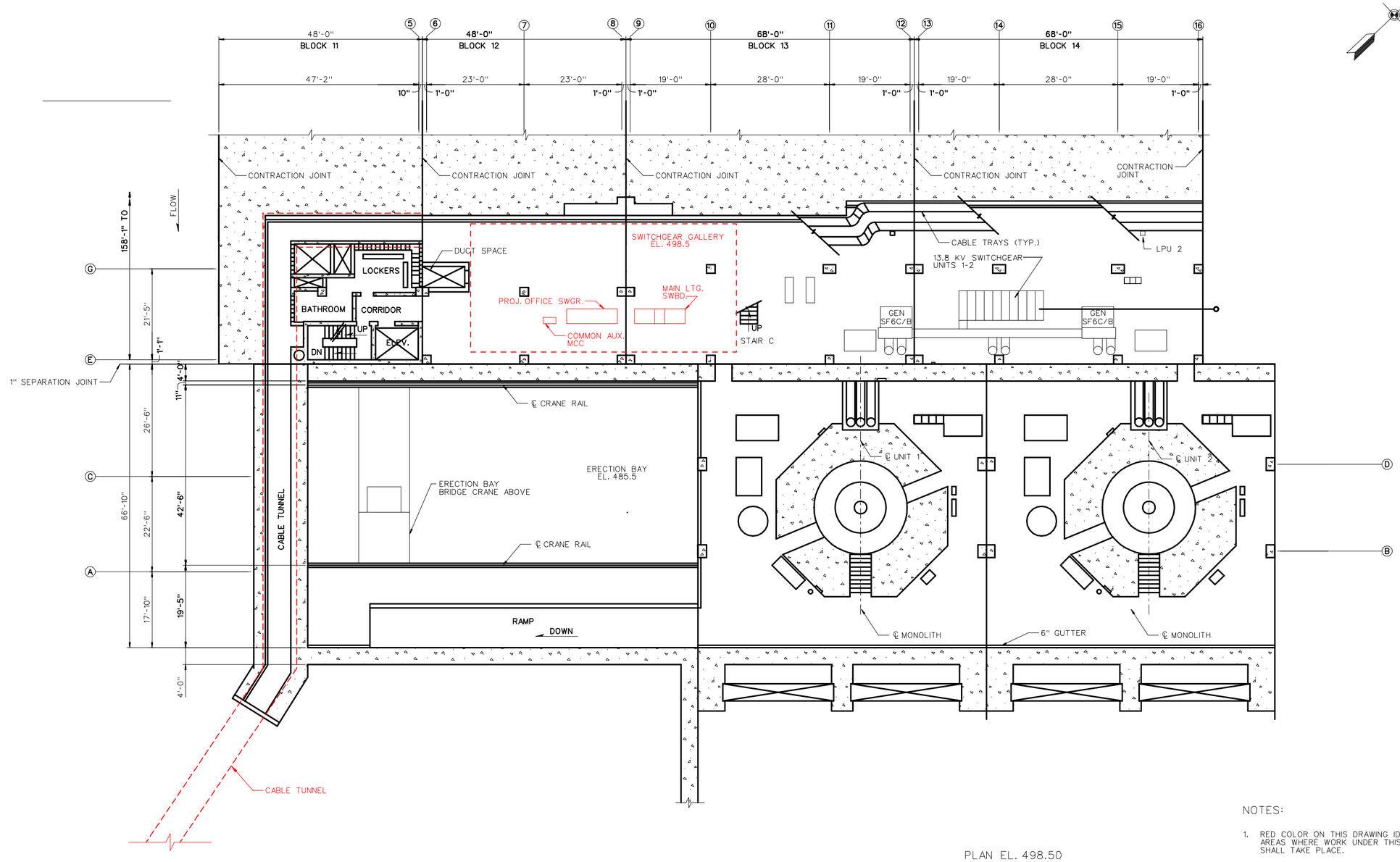

PLAN EL. 498.50

SCALE: 1" = 10'

10' 0 10'

NOTES:

1. RED COLOR ON THIS DRAWING IDENTIFIES AREAS WHERE WORK UNDER THIS CONTRACT SHALL TAKE PLACE.
2. WORK IN THESE AREAS SHALL BE COORDINATED WITH THE COR, NOT ALL EQUIPMENT SHOWN FOR PURPOSE OF CLARITY.

SYMBOL	ZONE	DESCRIPTION	DATE	BY

REVISIONS

HYDROELECTRIC DESIGN CENTER
PORTLAND, OR

U.S. ARMY ENGINEER DISTRICT
CORPS OF ENGINEERS
SAVANNAH, GEORGIA

HARTWELL MAJOR REHABILITATION - PHASE 2
HARTWELL DAM AND LAKE
SWITCHYARD UPGRADE
WORK LOCATIONS
POWERHOUSE EL 498.5
SAVANNAH RIVER GEORGIA AND S. CAROLINA

SIZE	SOLICITATION NO.	FILE NO.	PLATE
F	DACW21-03-B-0007	HAR0157	G-08

SCALE: SHEET 8

HAP103TB.DGN HAP103G08.DGN

25 Feb 2003
12:53:41

...\Har0157\03B07w\HAP103G08.DGN 03/24/2003 12:16:02 PM

GRAPHIC SYMBOLS LEGEND

- 230 KV SWITCHYARD CIRCUIT BREAKER
- 90 — AIR CIRCUIT BREAKER, NUMBER INDICATES TRIP RATING IN AMPERES.
- DISCONNECT SWITCH
- DISCONNECTING DEVICE, DISCONNECTING CONTACT
- 200-5 — CURRENT TRANSFORMER, 200 TO 5 CURRENT RATIO
- 3 — POTENTIAL OR CONTROL TRANSFORMER, 3 TOTAL (ONE LINE DIAGRAM)
- POWER TRANSFORMER (ONE LINE DIAGRAM)
- TRANSFORMER (CONTROL DIAGRAM)
- RESISTOR
- BUSHING CURRENT TRANSFORMER (ONE LINE DIAGRAM)
- FUSE
- CONTACTS (NORMALLY CLOSED)
- CONTACTS (NORMALLY OPEN)
- R — INDICATING LIGHT, LETTER INDICATES COLOR
- SURGE ARRESTER
- CONNECTION TO GROUND BUS
- TB — TEST BLOCK
- AS — AMMETER SWITCH
- VS — VOLTMETER SWITCH
- EQUIPMENT ENCLOSURE

EXAMPLES

X OR X — AUXILIARY RELAY

- 23 OR 23 — NUMBER OR LETTERS INDICATE DEVICE FUNCTION AS NOTED
- 42 OR 42
- 42X OR 42X — SUFFIX X INDICATES ASSOCIATED AUXILIARY RELAY
- 42-1 OR 42-1 — SUFFIX USED FOR IDENTIFICATION
- 42DP OR 42DP

CONDUIT, PIPING, AND GROUNDING LEGEND

- CONDUIT EXPOSED
- CONDUIT EMBEDDED IN FLOOR OR WALL
- CONDUIT TURNED TOWARD OBSERVER
- CONDUIT TURNED AWAY FROM OBSERVER
- O — OIL PIPING

CONTROL DEVICE FUNCTION

1	CONTROL SWITCH
2	TIME DELAY RELAY GT - GENERATOR BACKUP TRIP RELAY TC - TRIP COIL FAILURE RELAY TQ - TRANSFORMER OIL PUMP
3T	BREAKER INTERLOCKING RELAY
4X	TRANSFORMER CENTRALIZED CONTROL RELAY
5C	COMPLETE SHUTDOWN RELAY
5P	PARTIAL SHUTDOWN RELAY
20	ELECTRICALLY OPERATED VALVE TW - TRANS. WATER SPRAY
26	THERMAL DEVICE QT - TRANSFORMER OIL
27	UNDERVOLTAGE RELAY: T-TRANS.
27-1	OIL PUMP UNDERVOLTAGE RELAY
42TQ	TRANSFORMER OIL PUMP CONTACTOR
43	CONTROL TRANSFER SWITCH
43RT	RELAY TRANSFER SWITCH: L2-LINE NO.2, L3-LINE NO. 3
45	GAS DETECTOR RELAY
45M	DISSOLVED GAS ANALYZER
49	TEMPERATURE RELAY
51N	GROUND OVERCURRENT RELAY: T-TRANS.
52	A-C CIRCUIT BREAKER
52A	BREAKER AUXILIARY (CLOSED WHEN BREAKER CLOSED)
52B	BREAKER AUXILIARY (CLOSED WHEN BREAKER OPEN)
62	TIME DELAY OPENING RELAY: T-TRANS. OIL PUMP
63	PRESSURE OR FLOW SWITCH GDR - GAS DETECTOR RELAY L - LINE OCB PHA - P.H. AUX. OCB PHM - P.H. MAIN OCB PR - PRESSURE RELIEF DEVICE T - TRANS. SUDDEN PRESSURE
69CS	MOD PERMISSIVE SWITCH
71Q	OIL LEVEL GAUGE (CONSERVATOR TANK)
74	ALARM RELAY
80	FLOW SWITCH: Q-OIL, TO-TRANS. OIL, X-AUX. RELAY
85/CO	CARRIER CUTOFF SWITCH
85/TS	CARRIER TEST SWITCH
86	LOCKOUT RELAY
87	DIFFERENTIAL RELAY B - BUS L - POWERHOUSE LINE T - TRANSFORMER TZ - WATER SPRAY RELEASE X - AUXILIARY
94	AUXILIARY TRIP RELAY
121	DIRECTIONAL DISTANCE RELAY
121X	TIMING RELAY: T1,T2,T3-TIMER ZONE TARGETS
125	SYNCHRONISM CHECK RELAY
127	UNDERVOLTAGE RELAY: B-BUS, L-LINE
129	MOTOR OPERATED DISCONNECT SWITCH (MOD): A-AUXILIARY SWITCH CLOSED WHEN BREAKER IS CLOSED, B-AUXILIARY SWITCH CLOSED WHEN BREAKER IS OPEN. C-CONTACTOR CLOSING COIL, O-CONTACTOR OPENING COIL
129A	230 KV AUXILIARY BUS MOD
129L	230 KV LINE MOD: 2-LINE NO. 2, 3-LINE NO. 3, 4-LINE NO. 4
151	PHASE OVERCURRENT RELAY
151N	GROUND OVERCURRENT RELAY
152	OIL CIRCUIT BREAKER: A-AUXILIARY SWITCH CLOSED WHEN BREAKER IS CLOSED, B-AUXILIARY SWITCH CLOSED WHEN BREAKER IS OPEN.
152BF	OIL CIRCUIT BREAKER FAILURE RELAY
152LM	230KV LINE MAIN OCB: 2-LINE NO. 2, 3-LINE NO. 3, 4-LINE NO. 4
152TA	230KV TRANSFORMER AUXILIARY OCB: 1-TRANS NO. 1, 2-TRANS NO. 2, 3-TRANS NO. 3
152TM	230KV TRANSFORMER MAIN OCB: 1-TRANS NO. 1 , 2-TRANS NO. 2, 3-TRANS NO. 3
167CG	CARRIER DIRECTIONAL GROUND RELAY
167G	DIRECTIONAL GROUND RELAY: D-DIRECTIONAL UNIT
179	RECLOSING RELAY
185	CARRIER CURRENT AUXILIARY RELAY
194	AUXILIARY TRIP RELAY
A	AIR, AUTOMATIC, AUXILIARY
ANN	ANNUNCIATION
B	BACKUP, BUS
C	CLOSE
CC	CLOSING COIL
CCVT	COUPLING CAPACITOR VOLTAGE TRANSFORMER
CS	CONTROL SWITCH
DACS	RTD DATA ACQUISITION COMPUTER
G	GENERATOR, GREEN, GROUND
GCB	GAS CIRCUIT BREAKER
HR	HAND RESET
L	LOWER, LOCAL, LINE
LCO	LAMP CUTOUT
LPR	LINE PROTECTION RELAY
LS	LIMIT SWITCH
M	MANUAL, METER, MAIN
MF	MULTIFUNCTION
MOD	MOTOR OPERATED DISCONNECT
N	NORMAL, NEUTRAL
O	OPEN
OCB	OIL CIRCUIT BREAKER
P	PRIMARY
PLC	POWER-LINE CARRIER
PS	PRESSURE SWITCH
Q	OIL
R	RAISE, RED, REMOTE
RCO	RECLOSER CUTOUT SWITCH
SCADA	SUPERVISORY CONTROL AND DATA ACQUISITION
SS	SYNCHRONIZING SWITCH
T	TEST, TRIP, TRANSFORMER
TC	TRIP COIL
TD	TIME DELAY
TD	TEMPERATURE RECORDER: T-TRANS. WINDING
T/R	TRANSMITTER/RECEIVER
TS	TEST SWITCH
W	WHITE
X	AUXILIARY RELAY
Y	AUXILIARY RELAY
Z	AUXILIARY RELAY

THE FOLLOWING COLORS REPRESENT UNLESS OTHERWISE NOTED:

- (GREEN LINE) EQUIPMENT WITH ITEMS TO BE REMOVED, REPLACED, OR DISPOSED OF BY CONTRACTOR
- (RED LINE) EQUIPMENT WITH ITEMS FURNISHED AND/OR INSTALLED BY CONTRACTOR
- (BLUE LINE) GOVERNMENT FURNISHED EQUIPMENT INSTALLED BY CONTRACTOR UNDER THIS CONTRACT. (GFE)
- (BLACK LINE) EXISTING EQUIPMENT

NOTES:

1. CONDUITS AND BOXES ARE DIMENSIONED TO CENTERLINES UNLESS NOTED.
2. TYPICAL ITEMS SHOWN ON THIS DRAWINGS NOT ALL NECESSARILY REFERENCED ON FOLLOWING INDIVIDUAL DRAWINGS.
3. CONTROL DIAGRAMS SHOW CONTROL AND TRANSFER SWITCHES WITH CONTACTS IN THE DE-ENERGIZED POSITION OR WHEN QUANTITIES TO WHICH THEY RESPOND ARE OF THE LOWEST VALUE.
4. SYMBOLS, DEVICE NUMBERS AND LEGEND SHOWN ON THIS DRAWING ARE APPLICABLE FOR ALL DRAWINGS. HOWEVER, IF SYMBOLS, DEVICE NUMBERS AND LEGEND APPEAR ON AN INDIVIDUAL DRAWING AND DIFFERS FROM THIS DRAWING, THE INFORMATION ON THE INDIVIDUAL DRAWING SHALL GOVERN.
5. CONDUIT ROUTING SHOWN ON THESE DRAWINGS MAY NOT ABSOLUTELY BE THE MOST PRACTICABLE ROUTING; THEREFORE, SLIGHT MODIFICATION MAY BE MADE TO FACILITATE A BETTER INSTALLATION AFTER PERMISSION FROM THE CONTRACTING OFFICER'S REPRESENTATIVE HAS BEEN GRANTED.
6. THE ELECTRICAL DRAWINGS ARE BASED ON DRAWINGS PREPARED FOR THE PROCUREMENT OF GOVERNMENT FURNISHED EQUIPMENT AND MAY BE SUPERSEDED BY MANUFACTURER'S SHOP DRAWINGS WHEN AVAILABLE.
7. AT THIS PROJECT, THE ORIGINAL DRAWINGS USED AS "REFERENCE DRAWINGS" OFTEN REFER TO THE 'AUXILLIARY BUS" AS THE "TRANSFER BUS". IN THIS CONTRACT, THE SWITCHYARD USES A "MAIN BUS" AND AN "AUXILLIARY BUS".

SYMBOL	ZONE	DESCRIPTION	DATE	BY

REVISIONS

HYDROELECTRIC DESIGN CENTER
PORTLAND, OR

U.S. ARMY ENGINEER DISTRICT
CORPS OF ENGINEERS
SAVANNAH, GEORGIA

HARTWELL MAJOR REHABILITATION - PHASE 2
HARTWELL DAM AND LAKE
SWITCHYARD UPGRADE

NOTES & LEGEND

SAVANNAH RIVER GEORGIA AND S. CAROLINA

SIZE	SOLICITATION NO.	FILE NO.	PLATE
F	DACW21-03-B-0007	HAR0157	G-09

SCALE: | SHEET 9

25 Feb 2003
03:19:57

HAP103TB.DGN HAP103G09.DGN

...\Har0157\03B07w\HAP103G09.DGN 03/24/2003 12:16:39 PM

NOMENCLATURE

A. TERMINAL EQUIPMENT

1. SWITCHBOARDS AND SWITCHGEAR

DOC - DIGITAL OPERATION CONTROLLER
EPX - ENGINE PUMP CONTROL PANEL
MCP - MANUAL CONTROL PANEL
OD - OPERATOR'S DESK
ROC - REMOTE OPERATIONS CONTROLLER
SQ - 480 V. SWGR (ADD NO)
ST - STATUS BOARD
TF - TELEPHONE FRAME

2. LOAD CENTERS

CQ - 480 V
CR - 120/240V (120/208V)

3. APPARATUS

B - BATTERY
BF - BACKFLOW GATE
CT - CURRENT TRANSFORMER
EG - ENGINE GENERATOR
EF - EXHAUST FAN
ELPP - ENGINE LUBE OIL PRELUBE PUMP
FDT - DAY TANK LEVELS
FTPX - FUEL OIL SUPPLY PUMP
FTP6 - GEN. FUEL SUPPLY PUMP
(SIX, OTHER 5 ARE FTP1-5)
FUP - FUEL OIL UNLOADING PUMP
GLPP - GEAR LUBE OIL PRELUBE PUMP
GLP - GEAR LUBE OIL PUMP
GW - BOOSTER PUMP
K - CRANE
M - MOTOR
MCC - MOTOR CONTROL CENTER
PT - POTENTIAL TRANSFORMER
QPF - ENGINE LUBE OIL FILTER PUMP
QPF - LUBE OIL FILTER HEATER
QPT - LUBE OIL TRANSFER PUMP (CLEAN)
RW - RAW WATER PUMP
RWT1 - RAW WATER TRASH SCREEN
RWT2 - RAW WATER TRASH SCREEN WASH
RWV - RAW WATER VALVE (TO JACKET)
SP - SUMP PUMP
SF - SUPPLY FAN
T - TRANSFORMER (POWER)
TR - LIGHTING TRANSFORMER
TRSH - TRASH RAKE SYSTEM
UW - UNWATERING PUMP
V - VOLTAGE TRANSFORMER
VPSOL - VACUUM PRIME SOLENOID
VMB - VACUUM MAKE/BREAK SOLENOIDS
VP - VACUUM PUMP
WSOL - POTABLE WATER SOLENOID
X_ - BREAKER (ADD VOLTAGE LETTER)
XA - AIR COMPRESSORS (SINGLE FEEDER)
Z_ - DISC. SWITCH (ADD VOLTAGE LETTER)
(SFX, X = UNIT NO.)

4. MISC. TERM. EQUIPMENT, BOXES OR STRUCTURES

SOME ITEMS IN THIS LIST ARE USED FOR CABLE AND CONDUIT TERMINALS, BUT A MAJORITY ARE USED ONLY AS MODIFYING SUFFIXES FOR DEVICES ON SCHEMATIC DIAGRAMS

AC - AIR CONDITIONER
AN - ANNUNCIATOR
AR - ANNUNCIATOR RESET
AS - AMMETER SWITCH
BC - BATTERY CHARGER
BP - BY-PASS VALVE
DP - DRAINAGE PUMP
DS - DECK STATION
DT - DIFFERENTIAL TRANSMITTER
DWP - DOMESTIC WATER PUMP
EH - ELECTRIC HEATER
EL - ELEVATOR
EHQ - ELECTRIC OIL HEATER
ETM - ELAPSED TIME METER
EV - ELECTRICALLY OPERATED VALVE
FM - FLOW METER
FS - FLOAT SWITCH
FW - FLOAT WELL
FWG - FOREBAY WATER LEVEL GAGE
GI - GROUND INSERT
GP - GREASE PUMP
GW - GENERATOR COOLING WATER
HC - HEAD COVER SUMP PUMP
HP - HIGH PRESS.THR. BRG. OIL PUMP
HV - AIR COND. SYSTEM
HY - HYPOCHLORINATOR
IG - INTAKE GATE
IS - INTRUDER DETECTOR SYSTEM
JB - JUNCTION BOX
LT - LIGHTING OUTSIDE
LTH - LIGHTING, HIGH BAY
MMD - MONITORING AND METERING DEVICE
OR - OPERATIONS RECORDER
PA - STATION (PLANT) AIR COMPRESSOR
PC - PROGRAM CONTROLLER
PB - PULL BOX ALSO PUSHBUTTON
PR - PROJECT BLDG.
PS - POTENTIAL SELECTOR OR PRESSURE SWITCH
PT - PRESSURE TANK
PV - PENSTOCK VALVE
QP - OIL TRANSFER PUMP (MODIFIED) BY D-DIRTY, L-LUBE, T-TRANSIL)
RW - RAW WATER PUMP
RF - RECIRCULATING FAN
SD - SERVO OR SHAFT OIL CATCHER DRAIN PUMP
SF - SUPPLY FAN
SV - SPHERICAL VALVE
TB - TELEPHONE BOX OR TEST BLOCK
TBA - TURBINE BRG. OIL PUMP A-C
TBD - TURBINE BRG. OIL PUMP D-C
TC - TERMINAL CABINET OR TIME CLOCK
TE - THERMOSTAT
TWG - TAILWATER LEVEL GAGE
UW - UNWATERING PUMP
VS - VOLTMETER SWITCH
WH - WATER HEATER
WP - GATEWASH PUMP-DECK WASH PUMP
AH1 - HORN INSIDE STATION
AH2 - HORN OUTSIDE SOUTH
AH3 - HORN OUTSIDE NORTH
AH4 - HORN ACKNOWLEDGE, EAST DOOR
BD1 - BATTERY/CHARGER CABINET
CAM1-6 - CCTV CAMERA 1-6
CH1 - CCTV SYSTEM UPS
FST - FUEL STORAGE TANKS
FW1 - INTAKE STILLING WELL
FW2 - DISCHARGE STILLING WELL
HPS - STATION HORN SYSTEM
PA - STATION AIR
PAPS - STATION AIR COMPRESSOR SWITCH
QPF1-5 - ENGINE LUBE OIL PUMP 1-5
SOC - SYSTEMS OPERATION CONTROLLER
TC1 - TELEMETRY TERMINAL CABINET
TR - TRASH RAKE

B. SERVICE CLASSIFICATION

a - CURRENT TRANSFORMER SECONDARY LEADS-SHUNT LEADS
c - CONTROL CIRCUITS; EG CIRCUIT BREAKER CONTROL CIRCUITS, REGULATOR AND RHEOSTAT CONTROL CIRCUITS, GOVERNOR AND ACTUATOR CONTROL CIR.
d - 0-48 V D-C
e - POWER CIRCUIT, 125 V D-C
f - POWER CIRCUIT, 250 V D-C
h - 120V PREFERRED A-C
j - POWER CIRCUIT, 138KV A-C
m - POWER CIRCUIT, 230KV A-C
p - POWER CIRCUIT, 4160 V OR 2400 V A-C
q - POWER CIRCUIT 480 V A-C
r - POWER CIRCUIT (LIGHTING) 120/240 V OR 120/208 V A-C
s - SPARE CONDUIT
tr - RADIO CIRCUIT
t - TELEPHONE CIRCUITS, INTERCOM CIRCUIT
u ALARM CIRCUITS ANNUNCIATOR CIRCUITS SELF-SYNCHRONOUS INDICATING CIRCUITS, RTD AND TRANSDUCER OUTPUT CIRCUITS RECORDER, OTHER LOW-LEVEL SIGNAL CIRCUITS
uc - CODE CALL CIRCUITS
ut - CARRIER OR PILOT WIRE CIRCUIT
v - VOLTAGE (POTENTIAL) TRANSFORMER SECONDARIES AND D-C VOLTAGE LEADS
x - EXCITATION CIRCUITS

NOTES:

1. SYMBOLS AND DEVICE NUMBERS SHOWN ON THIS DRAWING ARE APPLICABLE FOR ALL DRAWINGS. HOWEVER, IF SYMBOLS AND DEVICE NUMBERS APPEAR ON AN INDIVIDUAL DRAWING AND DIFFERS FROM THIS DRAWING, INFORMATION ON THE INDIVIDUAL DRAWING SHALL GOVERN.

SYMBOL	ZONE	DESCRIPTION	DATE	BY

REVISIONS

HYDROELECTRIC DESIGN CENTER
PORTLAND, OR

U.S. ARMY ENGINEER DISTRICT
CORPS OF ENGINEERS
SAVANNAH, GEORGIA

HARTWELL MAJOR REHABILITATION - PHASE 2
HARTWELL DAM AND LAKE
SWITCHYARD UPGRADE
NOMENCLATURE

SAVANNAH RIVER GEORGIA AND S. CAROLINA

SIZE	SOLICITATION NO.	FILE NO.	PLATE
F	DACW21-03-B-0007	HAR0157	G-10

SCALE: SHEET 10

20 Dec 2002
11:48:14

HAP103TB.DGN HAP103G10.DGN

...\Har0157\03B07w\HAP103G10.DGN 03/24/2003 12:17:29 PM

GENERAL

1. ALL MATERIALS AND WORKMANSHIP SHALL CONFORM TO THE PROJECT SPECIFICATIONS AND THE 2000 EDITION OF "INTERNATIONAL BUILDING CODE" (IBC 2000).
2. SEE PROJECT SPECIFICATIONS FOR ADDITIONAL REQUIREMENTS.
3. STRUCTURES' ELEVATION 0'-0" EQUALS SWITCHYARD EXISTING FINISH GRADE ELEVATION 515'-0". CONTRACTOR IS RESPONSIBLE FOR FIELD VERIFICATION OF SWITCHYARD EXISTING FINISH GRADE.
4. LIVE LOAD: NONE. STRUCTURES ARE DESIGNED FOR SUPPORTING THE EQUIPMENT ONLY.
5. WIND FORCE:
   - A. IBC 2000 BASIC WIND SPEED (3-SECOND GUST) = 90 MPH
   - B. EXPOSURE CATEGORIES: D
   - C. IMPORTANCE FACTOR I = 1.15
6. SEISMIC FORCE (ZIP CODE 30643):
   - A. BASE SHEAR PER SECTION 1622 OF IBC 2000
   - B. SEISMIC USE GROUP: III
   - C. IMPORTANCE FACTOR I = 1.50
   - D. SITE CLASS: D (ASSUMED) FOR SWITCHYARD ONLY
   - E. THE MAXIMUM CONSIDERED EARTHQUAKE SPECTRAL RESPONSE ACCELERATIONS FOR SHORT PERIOD OF 0.2 SECOND, Sms = 0.569g WITH A SOIL FACTOR OF 1.50
   - F. THE MAXIMUM CONSIDERED EARTHQUAKE SPECTRAL RESPONSE ACCELERATIONS FOR 1 SECOND PERIOD, Sm1 = 0.303g WITH A SOIL FACTOR OF 2.26
7. THE CONTRACTOR SHALL BE RESPONSIBLE FOR STRUCTURAL STABILITY DURING THE CONSTRUCTION. THE STRUCTURES SHOWN ON THE DRAWINGS HAVE BEEN DESIGNED FOR STABILITY UNDER THEIR FINAL CONFIGURATIONS ONLY.
8. THE CONTRACTOR SHALL SHORE ALL CONSTRUCTION LOADS. THE CONTRACTOR IS RESPONSIBLE FOR SHORING DESIGN AND CONSTRUCTION.
9. THIS CONTRACT WORK OCCURS WITHIN A GOVERNMENT HYDROELECTRIC POWER PLANT FACILITY. CONTRACTOR SHALL COORDINATE ALL CONSTRUCTION ACCESS AND OPERATIONS WITH THE GOVERNMENT TO AVOID ANY DISRUPTION TO ONGOING FACILITY OPERATIONS.

FOUNDATIONS

1. SOIL INVESTIGATION REPORT IS NOT AVAILABLE FOR THIS PROJECT. GROUNDWATER TABLE IS UNKNOWN.
2. SHORE ALL EXCAVATIONS AS REQUIRED TO PREVENT SUBSIDENCE OR DAMAGE TO ADJACENT EXISTING STRUCTURES AND UTILITIES. THE CONTRACTOR IS RESPONSIBLE FOR DESIGN AND SHORING.
3. ALL SPREAD FOOTINGS ARE DESIGNED FOR AN ALLOWABLE BEARING PRESSURE OF 1,500 PSF.
4. ALL FOOTINGS, RE-USE FOOTINGS AND PADS SHALL BE CONSTRUCTED ON 9" MINIMUM, 12" MAXIMUM THICK BASE OF COMPACTED GRANULAR FILL MATERIAL. COMPACT FILL MATERIAL TO A MINIMUM OF 90% MODIFIED PROCTOR IN ACCORDANCE WITH ASTM D 1557-00. SEE SECTION 02315 OF SPECS FOR ADDITIONAL REQUIREMENTS.
5. CONTRACTOR SHALL INFORM THE GOVERNMENT FOR QUESTIONABLE SOIL, PREVIOUS CONSTRUCTION DEBRIS, COBBLES AND BOULDERS ENCOUNTERED DURING THE EXCAVATION.

CONCRETE FORMWORK

1. FORMWORK, SHORING AND RESHORING SHALL BE IN ACCORDANCE WITH ACI 301-99 "SPECIFICATIONS FOR STRUCTURAL CONCRETE" AND ACI 347-01 "GUIDE TO FORMWORK FOR CONCRETE".
2. THE CONTRACTOR SHALL BE RESPONSIBLE FOR DESIGN AND CONSTRUCTION OF FORMWORK, SHORING AND RESHORING.
3. REMOVE FORMS ONLY WHEN CONCRETE IS SUFFICIENT HARD TO PREVENT DAMAGE BY FORM REMOVAL AND THE CONCRETE HAS ATTAINED SUFFICIENT STRENGTH TO SAFELY SUPPORT DEAD AND ANY SUPERIMPOSED LOAD WHICH MAY BE APPLIED AS SUBSTANTIATED BY FIELD CURED TEST CYLINDERS.
4. CHAMFER ALL EXPOSED CONCRETE EDGE 3/4" TYP UN.

CONCRETE

1. CONCRETE COMPRESSIVE STRENGTH SHALL BE 3,000 PSI MINIMUM AT 28 DAYS WITH SLUMP OF 4" PLUS OR MINUS 1" AT PLACEMENT.
2. CONCRETE SHALL BE NORMAL WEIGHT CONCRETE OF 145 PCF. CONCRETE MATERIAL AND QUALITY SHALL BE IN ACCORDANCE WITH ACI 318-99 "BUILDING CODE REQUIREMENTS FOR STRUCTURAL CONCRETE". CONTRACTOR SHALL SUBMIT CONCRETE MIXTURE DESIGN TO THE GOVERNMENT FOR REVIEW.
3. CONCRETE PLACEMENT AND CURING SHALL BE IN ACCORDANCE WITH ACI 301-99 "SPECIFICATIONS FOR STRUCTURAL CONCRETE".
4. ALL EXTERIOR CONCRETE SHALL BE AIR ENTRAINED IN ACCORDANCE WITH THE SPECS.
5. TYPICAL CONCRETE FINISH:
   - A. FORMED SURFACES:
     1. EXPOSED TO VIEW: CLASS C.
     2. NOT EXPOSED TO VIEW: CLASS D.

REINFORCING STEEL

1. ALL REINFORCING STEEL SHALL BE ASTM A615/A615M-01b GRADE 60 DEFORMED BARS EXCEPT REINFORCING STEEL TO BE WELDED AND AS OTHERWISE NOTED ON THE DRAWINGS SHALL BE ASTM A706/A706M-01 GRADE 60 DEFORMED BARS.
2. FABRICATION AND PLACEMENT OF REINFORCING STEEL SHALL BE IN ACCORDANCE WITH CRSI 1MSP "MANUAL OF STANDARD PRACTICE" AND ACI 301-99 "SPECIFICATIONS OF STRUCTURAL CONCRETE".
3. CONCRETE COVER OVER REINFORCING STEEL SHALL BE AS FOLLOWS TYP UN:
   - A. CAST AGAINST EARTH: 3"
   - B. EXPOSED TO EARTH OR WEATHER: 2"
4. UNLESS OTHERWISE NOTED, ALL HOOPS AND HOOKS SHALL CONFORM TO CHAPTER 21 OF ACI 318-99.

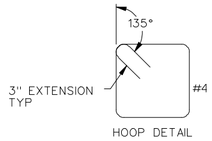

HOOP DETAIL

STRUCTURAL STEEL

1. ALL STEEL SHAPES, PLATES AND BARS SHALL BE ASTM A36/A36M-01 Fy = 36 KSI UNLESS OTHERWISE NOTED ON THE DRAWINGS. DUAL CERTIFIED STEEL (Fy = 36 KSI & Fy = 50 KSI) IS ACCEPTABLE FOR THE PROJECT.
2. SQUARE AND RECTANGULAR HOLLOW STRUCTURAL SECTIONS (HSS) SHALL BE ASTM A500-01a GRADE B Fy = 46 KSI.
3. FABRICATION AND CONSTRUCTION SHALL BE IN ACCORDANCE WITH THE AISC 1989 EDITION OF "SPECIFICATION FOR STRUCTURAL STEEL BUILDINGS", 2000 EDITION OF "CODE OF STANDARD PRACTICE FOR STEEL BUILDINGS AND BRIDGES" AND 1997 EDITION OF "SEISMIC PROVISIONS FOR STRUCTURAL STEEL BUILDINGS". THE CONTRACTOR IS RESPONSIBLE FOR THE DESIGN AND CONSTRUCTION OF TEMPORARY BRACING OR SHORING FOR SAFELY SUPPORTING STEEL PRIOR TO COMPLETION OF CONSTRUCTION.
4. ALL BOLTS SHALL BE ASTM A325-02 HIGH STRENGTH BOLTS. BOLT DIAMETERS ARE AS SHOWN ON THE DWGS. BOLT HOLES SHALL BE STANDARD ROUND HOLES (DIA+1/16").
5. INSTALLATION AND TIGHTENING OF BOLTS: ALL INSTALLATION AND TIGHTENING OF HIGH STRENGTH BOLTS ASTM A325 SHALL BE IN ACCORDANCE WITH AISC 1994 EDITION OF "SPECIFICATION FOR STRUCTURAL JOINTS USING ASTM A325 OR A490 BOLTS". THERE ARE TWO TYPES OF BOLTING CONNECTIONS. ONE IS A325SC AS SHOWN ON THE DWGS THAT REPRESENTS THE SLIP-CRITICAL CONNECTION AND THE OTHER IS A325N AS SHOWN ON THE DWGS THAT REPRESENTS THE SNUG TIGHT CONNECTION.
   - a. A325SC, SLIP-CRITICAL CONNECTIONS AS SHOWN ON THE DWGS, SHALL BE USED FOR ALL BRACE FRAMES AS SHOWN ON THE DWGS. ALL A325SC BOLTS SHALL BE FULLY TENSIONED. ALL FAYING SURFACES SHALL BE PREPARED AS REQUIRED FOR CLASS A OR BETTER SLIP-CRITICAL JOINTS.
   - b. A325N, SNUG TIGHT CONNECTIONS AS SHOWN ON THE DWGS, REQUIRES THAT ALL A325N BOLTS SHALL BE TIGHTENED TO THE SNUG TIGHT CONDITION. THE SNUG TIGHT CONDITION IS DEFINED AS THE TIGHTNESS THAT EXISTS WHEN ALL PLIES ARE IN FIRM CONTACT. THIS MAY USUALLY BE ATTAINED BY A FEW IMPACTS OF AN IMPACT WRENCH OR THE FULL EFFORT OF A MAN USING AN ORDINARY SPUD WRENCH.
6. ANCHOR BOLTS SHALL BE ASTM F 1554-99 GRADE 55. USE TEMPLATES TO INSTALL ANCHOR BOLTS.
7. WELDING SHALL BE IN ACCORDANCE WITH AWS D1.1/D1.1M-02 "STRUCTURAL WELDING CODE-STEEL". WELDING FILLER METAL SHALL BE AWS A5.1-91 OR A5.5-96 E70XX LOW HYDROGEN ELECTRODES. ALL WELDERS SHALL BE AWS QUALIFIED. SURFACE TO BE WELDED SHALL BE WIRE BRUSHED CLEAN PRIOR TO WELDING.

STEEL FABRICATIONS

1. ALL STEEL FABRICATIONS SHALL CONFORM TO THE REQUIREMENTS OF STRUCTURAL STEEL TYP UN.
2. ALL EXTERIOR STEEL FABRICATIONS INCLUDING ALL STEEL BEAMS, COLUMNS, EXPOSED STEEL BOLTS, ANCHORS, WASHERS, NUTS AND OTHER EXPOSED STEELS SHALL BE ZINC COATED HOT-DIP GALVANIZED TYP.

DEMOLITIONS

1. EXISTING STRUCTURES AND THEIR FOOTINGS THAT ARE REQUIRED TO BE REMOVED ARE SHOWN OR INDICATED ON THE INFORMATIONAL OR DESIGN DRAWINGS. THE CONTRACTOR SHALL FIELD VERIFY ALL THESE STRUCTURES PRIOR TO DEMOLITIONS.
2. THE CONTRACTOR IS RESPONSIBLE FOR SAFELY REMOVING OF STRUCTURES AND THEIR FOOTINGS AS REQUIRED WITHOUT CAUSING ANY DISRUPTION TO THE ON GOING HYDROELECTRIC POWER PLANT AND ITS SWITCHYARD OPERATION.
3. THE CONTRACTOR SHALL TAKE PROPER MEASURES TO PROTECT EXISTING GROUNDING, ADJACENT EXISTING UTILITIES, STRUCTURES AND THEIR FOOTINGS FROM ANY DAMAGE DURING THE DEMOLITIONS.
4. AFTER FOOTINGS' REMOVAL, CONTRACTOR SHALL PLACE BACKFILL MATERIAL TO THE ELEVATION OF THE EXISTING FINISH GRADE. THE BACKFILL MATERIAL IS TO REPLACE ALL REMOVED FOOTINGS AND IT SHALL BE FREE OF ORGANIC MATERIAL, CONSTRUCTION DEBRIS, COBBLES AND BOULDERS. THE BACKFILL SHALL BE PLACED IN LIFTS AND COMPACTED. SEE FOUNDATIONS AND PROJECT SPECIFICATIONS FOR ADDITIONAL REQUIREMENTS.

INTERPRETATION OF STRUCTURAL DRAWINGS ONLY

SYMBOL	DESCRIPTION
AB	ANCHOR BOLT
ACI	AMERICAN CONCRETE INSTITUTE
ADDL	ADDITIONAL
ADJ	ADJACENT
AISC	AMERICAN INSTITUTE OF STEEL CONSTRUCTION
AL	ALUMINUM
ALT	ALTERNATE
ANC	ANCHOR
ARCH	ARCHITECT, ARCHITECTURAL
ASTM	AMERICAN SOCIETY OF TESTING AND MATERIAL
AWS	AMERICAN WELDING SOCIETY
@	AT
BAL	BALANCE
BLDG	BUILDING
BM	BEAM
BOT	BOTTOM
BRG	BEARING
BTWN	BETWEEN
CC	CENTER TO CENTER
CHKD	CHECKERED
CIP	CAST IN PLACE
CJ	CONSTRUCTION/CONTROL JOINT
CL	CENTER LINE
CLR	CLEAR, CLEARANCE
CMU	CONCRETE MASONRY UNIT
COL	COLUMN
CONC	CONCRETE
CONN	CONNECTION
CONT	CONTINUOUS
CRSI	CONCRETE REINFORCING STEEL INSTITUTE
CTR	CENTER
CTRD	CENTERED
CTSK	COUNTERSINK
DBA	DEFORMED BAR ANCHOR
DBL	DOUBLE
DIA.	DIAMETER
DL	DEAD LOAD
DN	DOWN
DWG(S)	DRAWING(S)
DWL(S)	DOWEL(S)
D/S	DOWNSTREAM
EA	EACH
ECS	EPOXY CAOATED STEEL
EE	EACH END
EF	EACH FACE
EL	ELEVATION
EQ	EQUAL
EQUIP	EQUIPMENT
EW	EACH WAY
EXP	EXPANSION
EXST	EXISTING
EXT	EXTERIOR
FD	FLOOR DRAIN
FDN	FOUNDATION
FT (')	FOOT (FEET)
FIN	FINISH
FLG	FLANGE
FLR	FLOOR
FOM	FACE OF MASONRY
FOS	FACE OF STUD
FRMG	FRAMING
FRP	FIBER REINFORCED PLASTIC
FS	FAR SIDE
FTG	FOOTING
FV	FIELD VERIFICATION
GA	GAUGE, GAGE
GALV	GALVANIZED
GB	GRADE BEAM
GRTG	GRATING
HCA	HEADED CONCRETE ANCHOR
HORIZ	HORIZONTAL
HSB	HIGH STRENGTH BOLT
HT	HEIGHT
I.E.	INVERT OF TRENCH
I.F.	INSIDE FACE
IN (")	INCH(S)
INFO	INFORMATION
ID	INSIDE DIAMETER
JT	JOINT
KSI	KIPS PER SQUARE INCH
L	ANGLE
LBS	POUNDS
LL	LIVE LOAD
LONGIT	LONGITUDINAL
LLH	LONG LEG HORIZONTAL
LLV	LONG LEG VERTICAL
LSH	LONG SLOTTED HOLE
MFR	MANUFACTURER
MAX	MAXIMUM
MB	MACHINE BOLT
MECH	MECHANICAL
MIN	MINIMUM
MTL	METAL
NDT	NOT-DESTRUCTIVE TEST
NIC	NOT IN CONTRACT
NO.	NUMBER
#	NUMBER
NS	NEAR SIDE
NTS	NOT TO SCALE
OC	ON CENTER
O.F.	OUTSIDE FACE
O-O	OUT TO OUT
OPNG	OPENING
OPP	OPPOSITE
OSH	OVERSIZED HOLE
/	PER
%	PERCENT
PC	PRECAST
PEN	PENETRATION
PLACS	PLACES
PJF	PREMOLDED JOINT FILLER
PL	PLATE
PROJ	PROJECTION
PSF	POUND PER SQUARE FOOT
PSI	POUND PER SQUARE INCH
PT	POINT
PVE	POLYVINYL CHLORIDE
R	RADIUS
RD	ROOF DRAIN

SYMBOL	DESCRIPTION
REINF	REINFORCE/REINFORCING
REF	REFERENCE
REQD	REQUIRED
RO	ROUGH OPENING
RTN	RETURN
SC	SLIP CRITICAL
SCHED	SCHEDULE
SHT	SHEET
SIB	STRUCTURAL ISOLATION BREAK
SIM	SIMILAR
SPCG	SPACING
SPECS	SPECIFICATIONS
SQ	SQUARE
SS	STAINLESS STEEL
SSH	SHORT SLOTTED HOLE
STA	STATION
STD	STANDARD
STIF	STIFFENER
STL	STEEL
STRUCT	STRUCTURAL
SYM	SYMMETRICAL
T&B	TOP AND BOTTOM
TEMP	TEMPORARY
THK	THICK
T.O.	TOP OF
TOC	TOP OF CONCRETE
TOF	TOP OF FOOTING
TOS	TOP OF STEEL
TOW	TOP OF WALL
TRANS	TRANSVERSE
TYP	TYPICAL
UN	UNLESS NOTED
U/S	UPSTREAM
VERT	VERTICAL
W	WIDE FLANGE BEAM
W/	WITH
W/O	WITHOUT
WP	WORK POINT
WS	WATERSTOP
WT	WEIGHT
WWF	WELDED WIRE FABRIC

LEGEND

- X — X: SECTION DESIGNATION, NUMBER OR LETTER; SECTION IS SHOWN ON THE SAME DRAWING/PLATE
- X/X — X/X: SECTION DESIGNATION, NUMBER OR LETTER; DRAWING/PLATE THAT THE SECTION IS SHOWN ON
- X/—: DETAIL NUMBER; DETAIL IS SHOWN ON THE SAME DRAWING/PLATE
- X/X: DETAIL NUMBER; DRAWING/PLATE THAT THE DETAIL IS SHOWN ON
- BRACED BAY ABOVE FRAMING LEVEL SHOWN
- BRACED BAY BELOW FRAMING LEVEL SHOWN
- (GREEN LINE) EXISTING STRUCTURES REMOVED OR RELOCATED BY THE CONTRACTOR
- (RED LINE) STRUCTURES PROVIED BY THE CONTRACTOR.
- (BLACK LINE) EXISTING STRUCTURES.

MATERIAL SYMBOLS

- EARTH
- STEEL
- GRAVEL
- SAND FILL
- ROCK
- CMU
- CONCRETE
- EXISTING CONCRETE

SYMBOL	ZONE	DESCRIPTION	DATE	BY

REVISIONS

HYDROELECTRIC DESIGN CENTER
PORTLAND, OR

U.S. ARMY ENGINEER DISTRICT
CORPS OF ENGINEERS
SAVANNAH, GEORGIA

HARTWELL MAJOR REHABILITATION - PHASE 2
HARTWELL DAM AND LAKE
SWITCHYARD UPGRADE
STRUCTURAL

STRUCTURAL GENERAL NOTES

SAVANNAH RIVER GEORGIA AND S. CAROLINA

SIZE	SOLICITATION NO.	FILE NO.	PLATE
F	DACW21-03-B-0007	HAR0157	S-01

SCALE: AS SHOWN SHEET 11

DATE: 9 May 2002

HAP103TB.DGN HAP103S01.DGN

...\Har0157\03B07w\HAP103S01.dgn 03/24/2003 12:18:18 PM

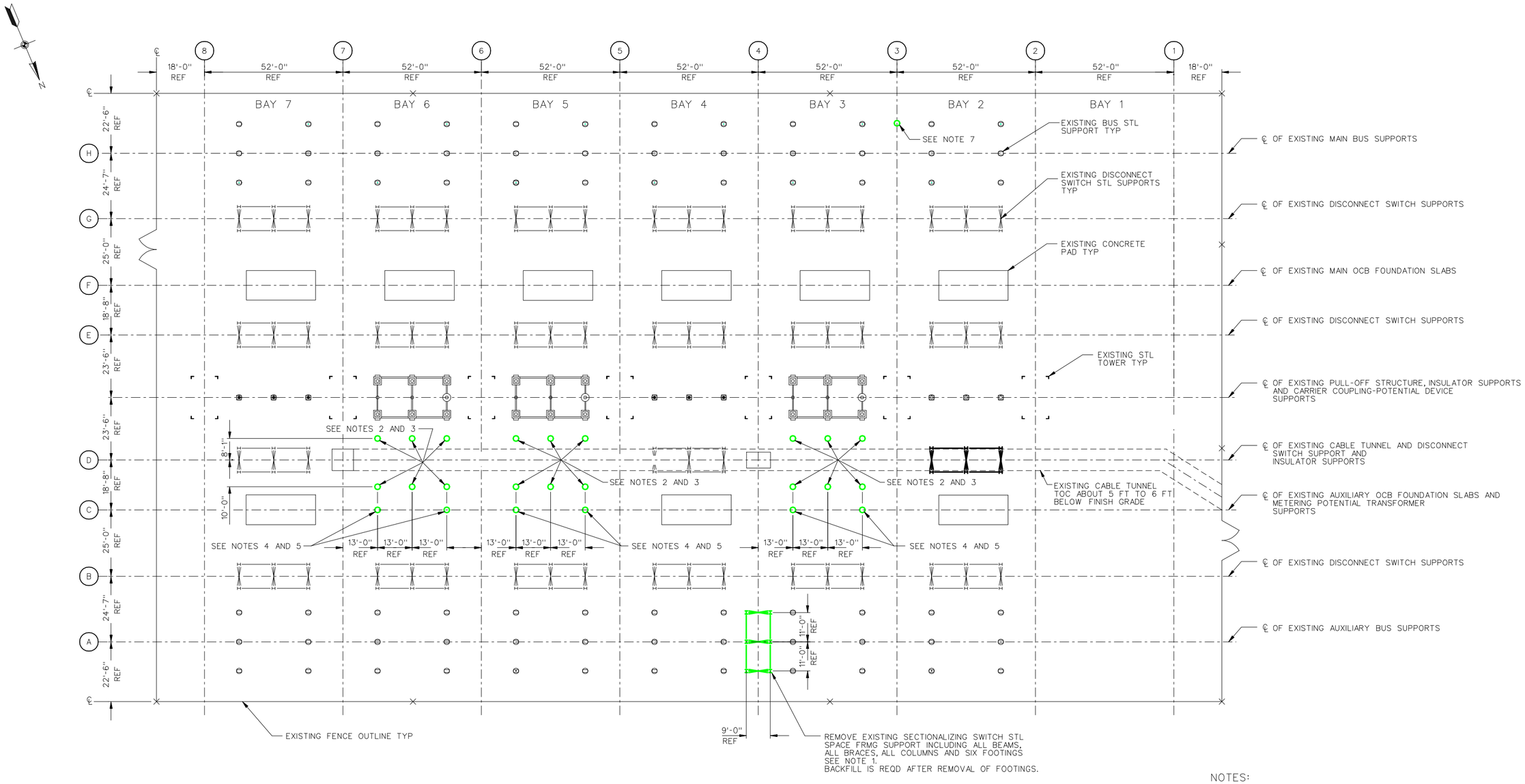

DEMOLITION PLAN (PLAN OF EXST SWITCHYARD STRUCTURES AT THE FINISH GRADE EL 0'-0")

SCALE: 1/16" = 1'-0"
2'0 10' 20' 30'

NOTES:

1. SEE REF DWGS PLATE NO. P-242, P-243, AND P-247A FOR EXISTING SECTIONALIZING SWITCH STL SUPPORT'S FOOTINGS AND STL FRMG DETAILS.
2. REMOVE EXST INSULATORS' STL SUPPORTS AND THEIR FOOTINGS, 18 TOTAL. BACKFILL IS REQD AFTER REMOVAL OF FTG.
3. SEE REFERENCE DWGS PLATES P-242, P-243, AND P-247 FOR EXISTING INSULATOR SUPPORTS' FOOTINGS AND STL PIPE DETAILS.
4. DISPOSE OF EXISTING METERING POTENTIAL TRANSFORMER STEEL SUPPORTS AND CONCRETE FOOTINGS. SIX (6) NEW STEEL SUPPORTS AND CONCRETE FOOTINGS ARE REQUIRED AT NEW LOCATION FOR LINE PT'S. SEE PLATE E42. SEE DETAIL 5 AND 6 ON DWG S6 FOR LIFTING BRACKETS ATTACHMENT.
5. SEE REF DWGS PLATE NO. P-242, P-243 AND P-247A FOR EXISTING METERING POTENETIAL TRANSFORMER SUPPORTS' FOOTINGS AND STL PIPE DETAILS.
6. SEE PROJECT SPECS AND DEMOLITIONS SECTION OF STRUCTURAL GENERAL NOTES SHT FOR ADDITIONAL REQUIREMENTS.
7. REMOVE EXISTING COUP. CAP POT. DEVICE STEEL SUPPORT AND ITS FTG. BACKFILL IS REQD AFTER REMOVAL OF FTG.

SYMBOL	ZONE	DESCRIPTION	DATE	BY

REVISIONS

HYDROELECTRIC DESIGN CENTER
PORTLAND, OR

U.S. ARMY ENGINEER DISTRICT
CORPS OF ENGINEERS
SAVANNAH, GEORGIA

HARTWELL MAJOR REHABILITATION - PHASE 2
HARTWELL DAM AND LAKE
SWITCHYARD UPGRADE

DEMOLITION

SAVANNAH RIVER GEORGIA AND S. CAROLINA

SIZE	SOLICITATION NO.	FILE NO.	PLATE
F	DACW21-03-B-0007	HAR0157	S-02

SCALE: SHEET 12

25 Feb 2003
1:\h02.tt

HAP103TB.DGN HAP103S02.DGN

...\Har0157\03B07w\HAP103S02.DGN 03/24/2003 12:19:05 PM

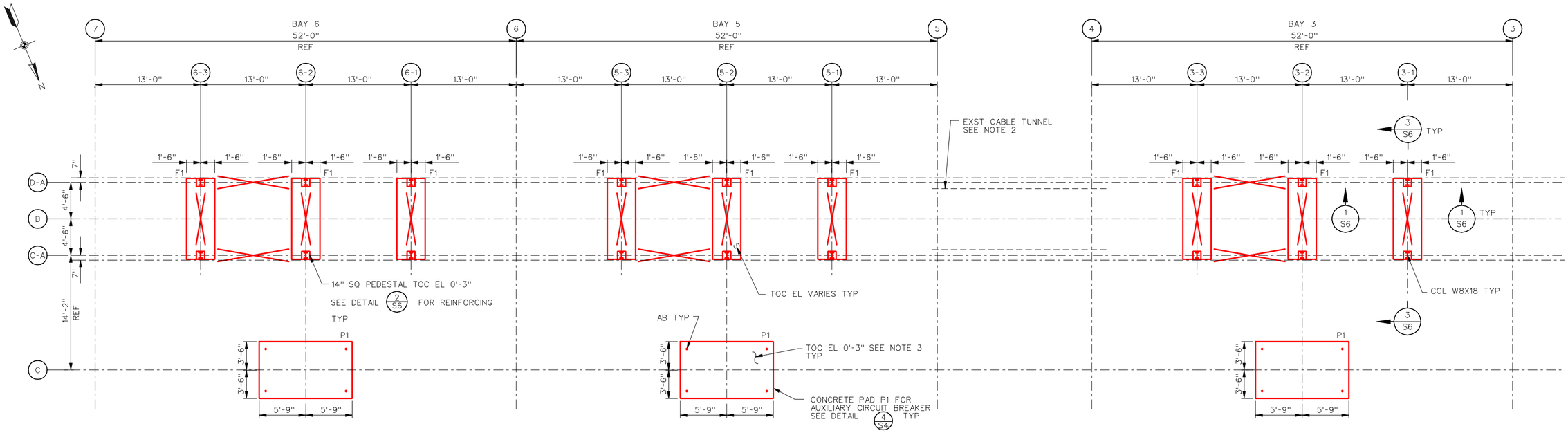

FOUNDATION PLAN

SCALE: 3/16" = 1'-0"

NOTES:

1. FOR CLARITY, ONLY PARTIAL EXISTING CABLE TUNNEL IS SHOWN.
2. SEE DWG S5 FOR DIAGONAL BRACE FRAMES.
3. TOC HORIZONTAL SURFACE FLATNESS TOLERANCE IS MINUS 0'-0" AND PLUS 0'-3/16". SEE SPECS FOR TOC FLATNESS REQUIREMENT.
4. FOR FTGS BASE PREPARATION REQUIREMENTS, SEE FOUNDATION IN STRUCTURAL GENERAL NOTES SHEET AND THE SPECS.
5. FOR COLUMNS OF W8 CAST-IN-PLACE ANCHORS' LAYOUT AND DETAIL, SEE DETAIL 3/S4 TYP.

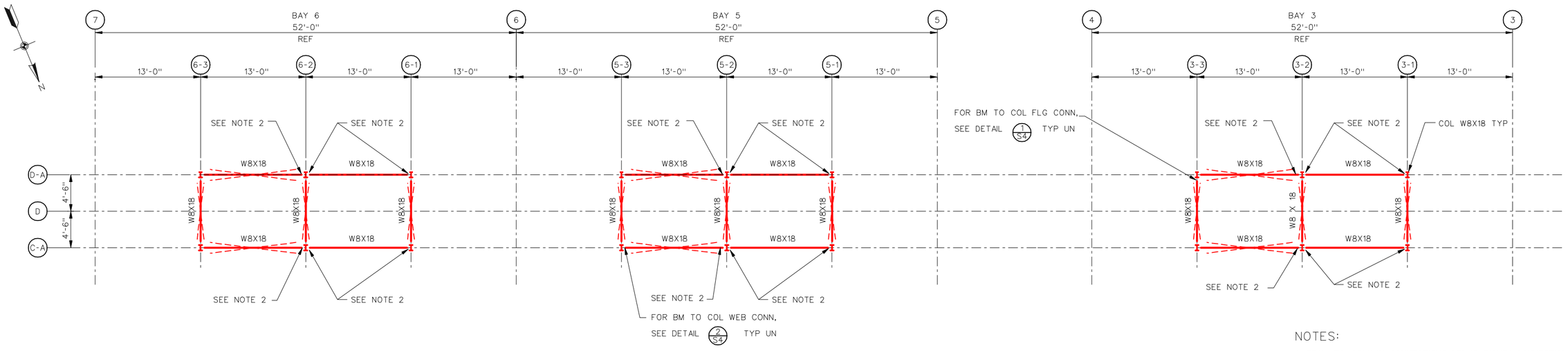

TOP STEEL FRAMING PLAN TOS EL 20'-5" TYP

SCALE: 3/16" = 1'-0"

NOTES:

1. BEAM TO COLUMN CONNECTIONS: "SNUG TIGHT" CONNECTIONS, TYP UN.
2. BEAM TO COLUMN CONNECTIONS: SLIP-CRITICAL CONNECTIONS AS REQD.
3. SEE DWG S5 FOR DIAGONAL BRACE FRAMES.
4. IT IS AN OPTION FOR THE CONTRACTOR TO REPLACE ALL "SNUG TIGHT" CONNECTIONS WITH SLIP-CRITICAL CONNECTIONS.

SYMBOL	ZONE	DESCRIPTION	DATE	BY

REVISIONS

HYDROELECTRIC DESIGN CENTER
PORTLAND, OR

U.S. ARMY ENGINEER DISTRICT
CORPS OF ENGINEERS
SAVANNAH, GEORGIA

HARTWELL MAJOR REHABILITATION - PHASE 2
HARTWELL DAM AND LAKE
SWITCHYARD UPGRADE

FOUNDATION AND TOP STEEL
FRAMING PLAN

SAVANNAH RIVER GEORGIA AND S. CAROLINA

SIZE	SOLICITATION NO.	FILE NO.	PLATE
F	DACW21-03-B-0007	HAR0157	S-03

SCALE: SHEET 13

23 Feb 2003
TM-103

HAP103TB.DGN HAP103S03.DGN

...\Har0157\03B07w\HAP103S03.dgn 03/24/2003 12:19:45 PM

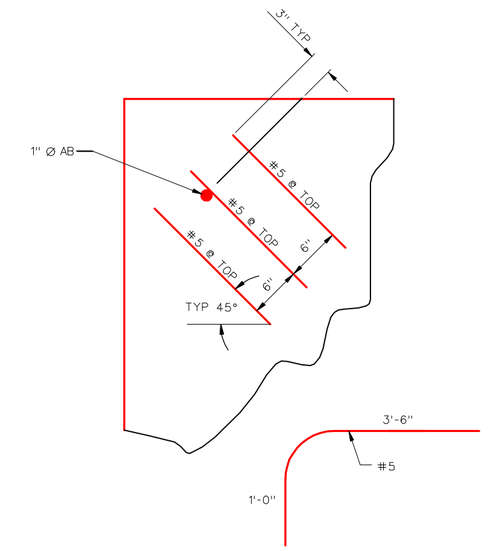

TYP CORNER REINF #5 @ TOP

6 — TYP CORNER REINFORCING DETAIL
PLAN VIEW

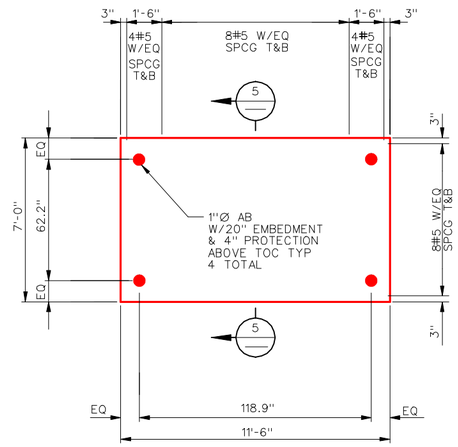

NOTES:

1. SEE FOUNDATION PLAN FOR TOC EL AND TOC SURFACE FLATNESS REQUIREMENTS.
2. SEE FOUNDATION PLAN FOR PAD BASE PREPREATION REQUIREMENTS.
3. CONCRETE PAD P1 AND ANCHOR BOLTS LAYOUT WERE DESIGNED BASED ON REF DWG HG14C1131 BY ALSTOM, TOTAL EQUIPMENT WT FOR EACH PAD P1 = 7,222 LBS.
4. SEE DETAIL 6/— FOR TYPICAL CORNER REINFORCING REQUIREMENTS.

4/S3 CONCRETE PAD P1 DETAIL
SCALE: 3/8" = 1'-0"

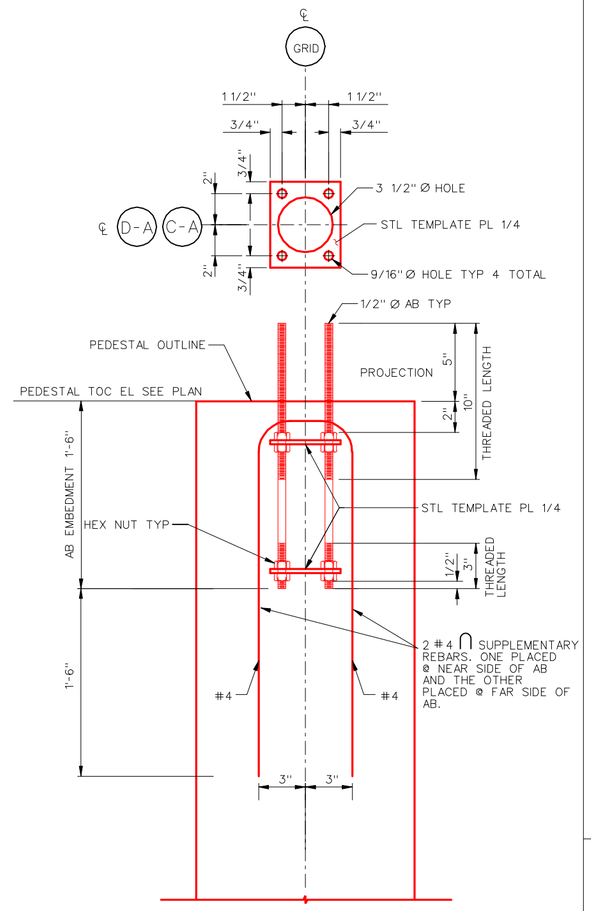

3/S6 TYP ANCHOR BOLT ASSEMBLY DETAIL
SCALE: 3" = 1'-0"

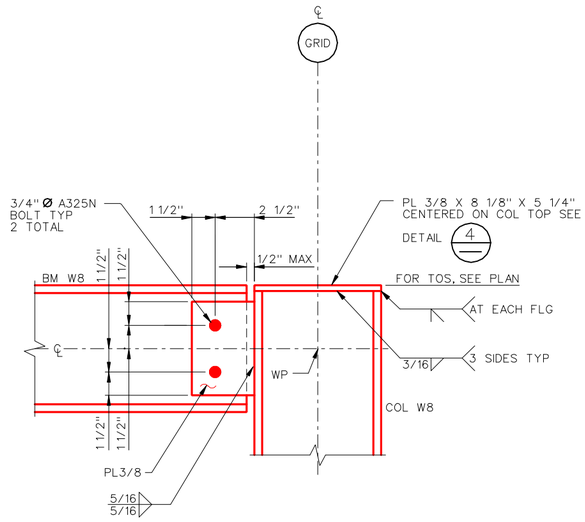

1/S3 TYP FRAMING CONNECTION DETAIL
(BM TO COL FLG)
SCALE: 3" = 1'-0"

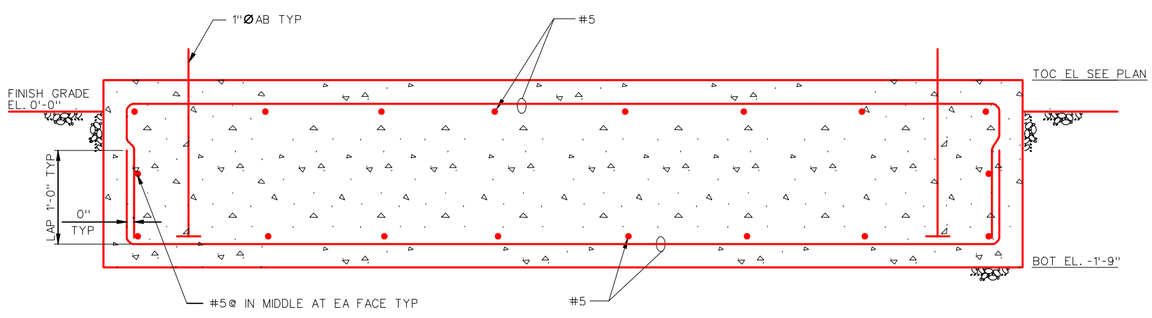

5/— REINFORCING SECTION
SCALE: 3" = 1'-0"

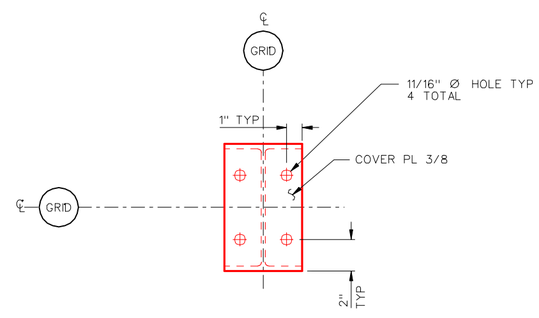

4/— TYP DETAIL OF COL W8 TOP PL HOLES LAYOUT
SCALE: 3 " = 1'-0"

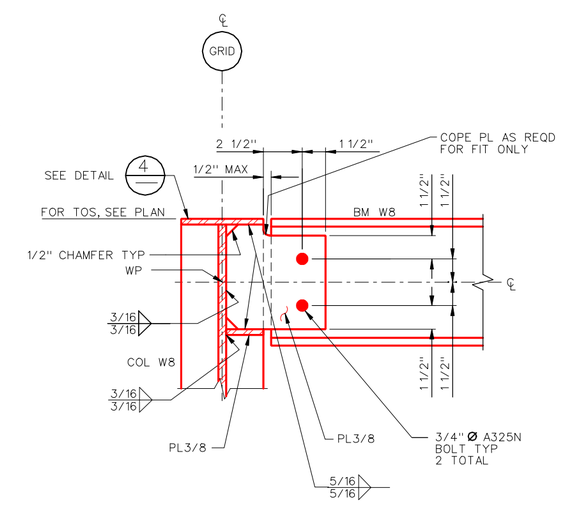

2/S3 TYP FRAMING CONNECTION DETAIL
(BM TO COL WEB)
SCALE: 3" = 1'-0"

SYMBOL	ZONE	DESCRIPTION	DATE	BY

REVISIONS

HYDROELECTRIC DESIGN CENTER
PORTLAND, OR

U.S. ARMY ENGINEER DISTRICT
CORPS OF ENGINEERS
SAVANNAH, GEORGIA

HARTWELL MAJOR REHABILITATION - PHASE 2
HARTWELL DAM AND LAKE
SWITCHYARD UPGRADE
STRUCTURAL DETAILS
SHEET 1
SAVANNAH RIVER GEORGIA AND S. CAROLINA

SIZE	SOLICITATION NO.	FILE NO.	PLATE
F	DACW21-03-B-0007	HAR0157	S-04

SCALE: SHEET 14

20 Dec 2002
13:42:24

HAP103TB.DGN HAP103S04.DGN

...\Har0157\03B07w\HAP103S04.dgn 03/24/2003 12:20:21 PM

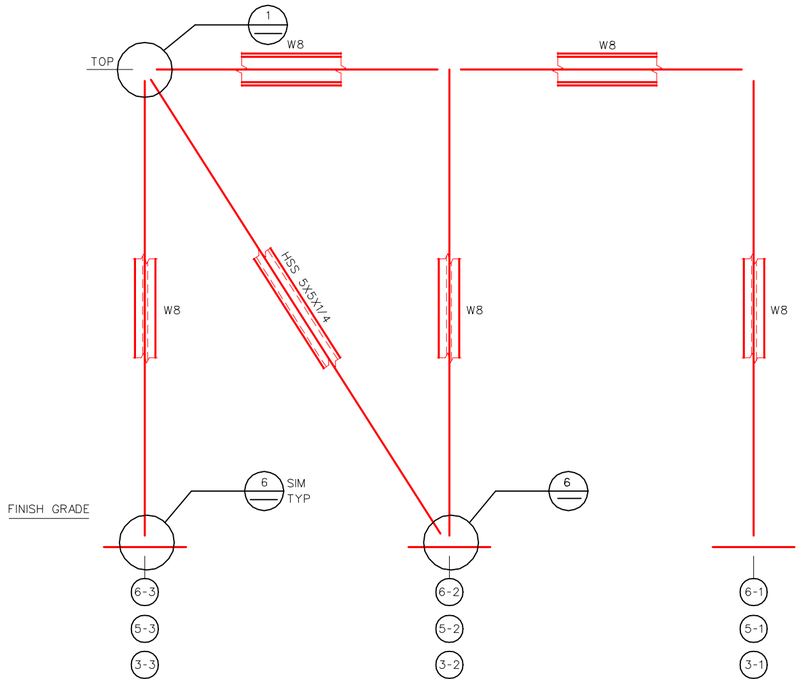

5 S3 BRACE FRAMES ON GRID LINES C-A AND D-A

SCALE: 3/8" = 1'-0"

NOTE:

1. SEE DWG S3 FOR BRACE FRAMES CALLOUT AND TOS EL.

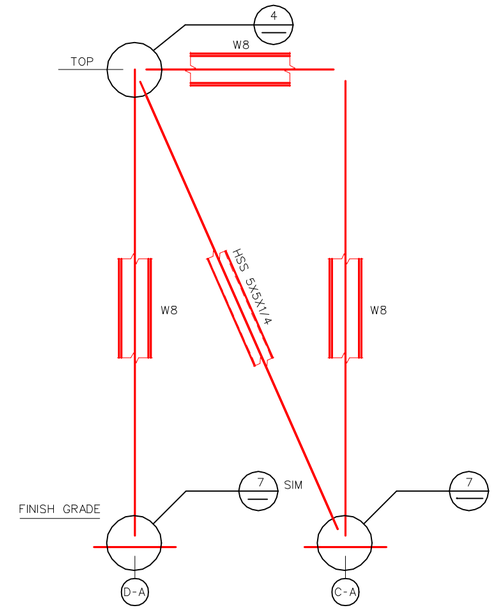

NOTE:

1. SEE DWG S3 FOR BRACE FRAMES CALLOUT AND TOS EL.

3 S3 BRACE FRAMES ON GRID LINES 3-1, 3-2, 3-3, 5-1, 5-2, 5-3, 6-1, 6-2 AND 6-3

SCALE: 3/8" = 1'-0"

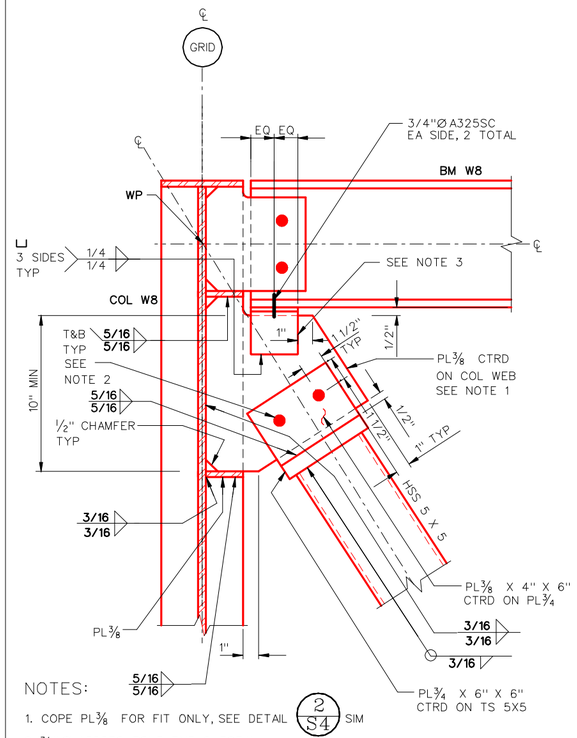

NOTES:

1. COPE PL3/8 FOR FIT ONLY, SEE DETAIL 2 S4 SIM
2. 3/4" Ø A325SC BOLT TYP, 2 TOTAL
3. 2L3X3X1/4X0'-3" LLV, SEE DETAIL 2

1 BRACE CONNECTION DETAIL

(BRACE TO COL WEB)

SCALE: 3" = 1'-0"

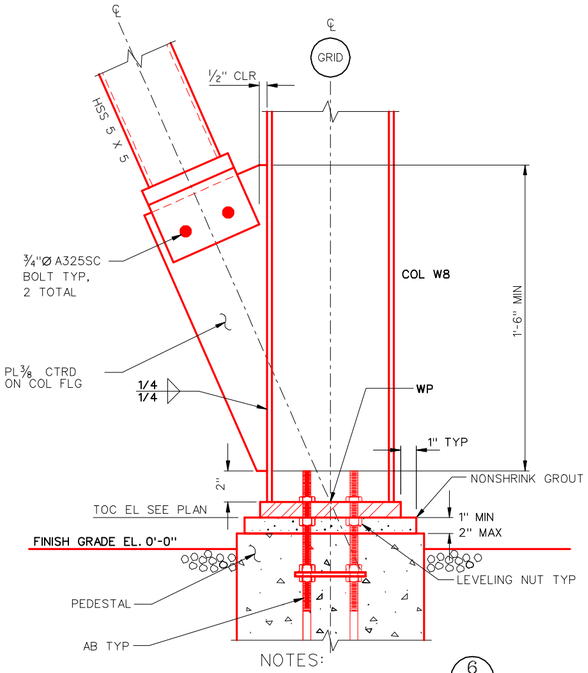

NOTES:

1. FOR BASE PL, SEE DETAIL 6 SIM
2. FOR INFO NOT SHOWN, SEE DETAIL 1

7 BRACE CONNECTION DETAIL "D"

(BRACE TO COL FLG)

SCALE: 3" = 1'-0"

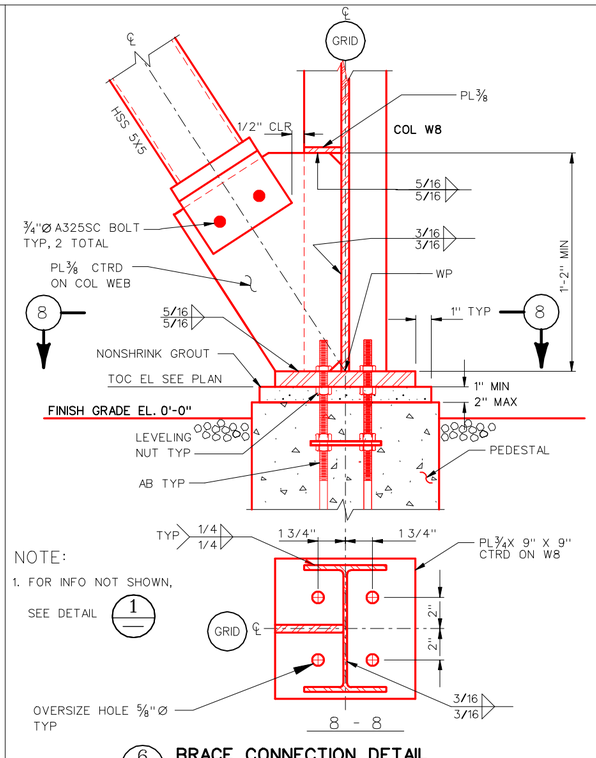

NOTE:

1. FOR INFO NOT SHOWN, SEE DETAIL 1

6 BRACE CONNECTION DETAIL

(BRACE TO COL WEB)

SCALE: 3 " = 1'-0"

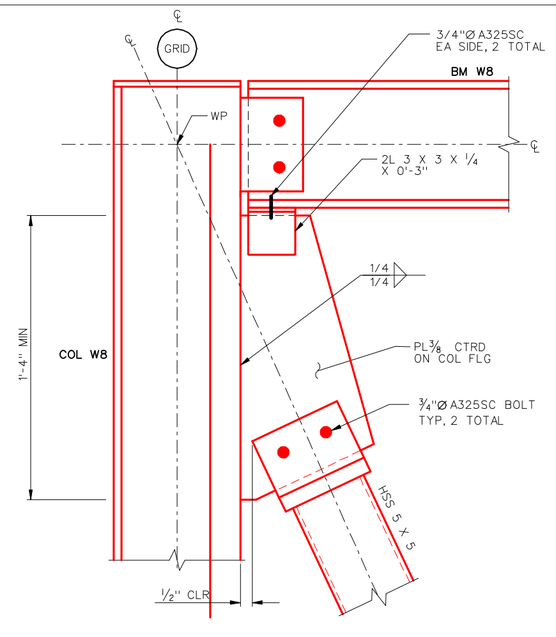

NOTE:

1. FOR INFO NOT SHOWN, SEE DETAIL 1

4 BRACE CONNECTION DETAIL

(BRACE TO COL FLG)

SCALE: 3" = 1'-0"

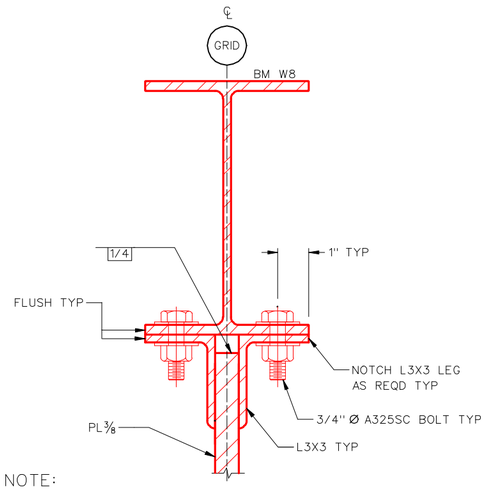

NOTE:

1. BM END PL SHEAR CONNECTION NOT SHOWN.

2 CONNECTION DETAIL

SCALE: 1 1/2" = 1'-0"

SYMBOL	ZONE	DESCRIPTION	DATE	BY

REVISIONS

HYDROELECTRIC DESIGN CENTER
PORTLAND, OR

U.S. ARMY ENGINEER DISTRICT
CORPS OF ENGINEERS
SAVANNAH, GEORGIA

HARTWELL MAJOR REHABILITATION - PHASE 2
HARTWELL DAM AND LAKE
SWITCHYARD UPGRADE
STRUCTURAL DETAILS
SHEET 2
SAVANNAH RIVER GEORGIA AND S. CAROLINA

SIZE	SOLICITATION NO.	FILE NO.	PLATE
F	DACW21-03-B-0007	HAR0157	S-05

SCALE: | SHEET 15

25 Dec 2002
13:16:53

HAP103TB.DGN HAP103S05.DGN

...\Har0157\03B07w\HAP103S05.dgn 03/24/2003 12:21:06 PM

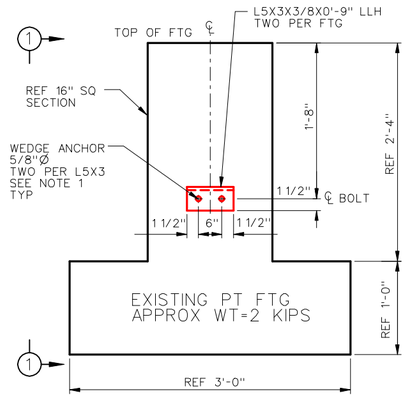

NOTES:

1. WEDGE ANCHORS SHALL BE HILTI CARBON STEEL KWIK BOLT- II 5/8" Ø W/MIN 4" EMBED IN CONCRETE.

   ALLOWABLE TENSION W/O SP INSP = 1335#/ANCHOR

   ALLOWABLE SHEAR = 3125#/ANCHOR

   ABOVE VALUES ARE FROM ICBO REPORT ER-4627.

   CONTRACTOR MAY USE DIFFERENT ICBO APPROVED WEDGE ANCHORS W/ABOVE EQUIVALENT ALLOWABLE TENSION AND SHEAR VALUES.

2. EACH FTG SHALL BE LIFTED BY USING TWO CABLES AND IT SHALL BE KEPT LEVELED DURING LIFTING, TRANSPORTATION AND REPOSITIONING INTO THE NEW LOCATION TYP.

3. FTG SHALL NOT BE LIFTED BY USING ONLY ONE CABLE.

4. THE CONTRACTOR IS RESPONSABLE FOR THE DESIGN AND SUPPLY OF THE LIFTING CABLES. USE F.S.=3 FOR THE DESIGN.

5. THE CONTRACTOR SHALL TAKE NECESSARY MEASUREMENTS TO PREVENT FTGS FROM ANY DAMAGE DURING THE CONSTRUCTION.

5/S2 LIFTING BRACKETS ATTACHMENT DETAIL

SCALE: 3" = 1'-0"

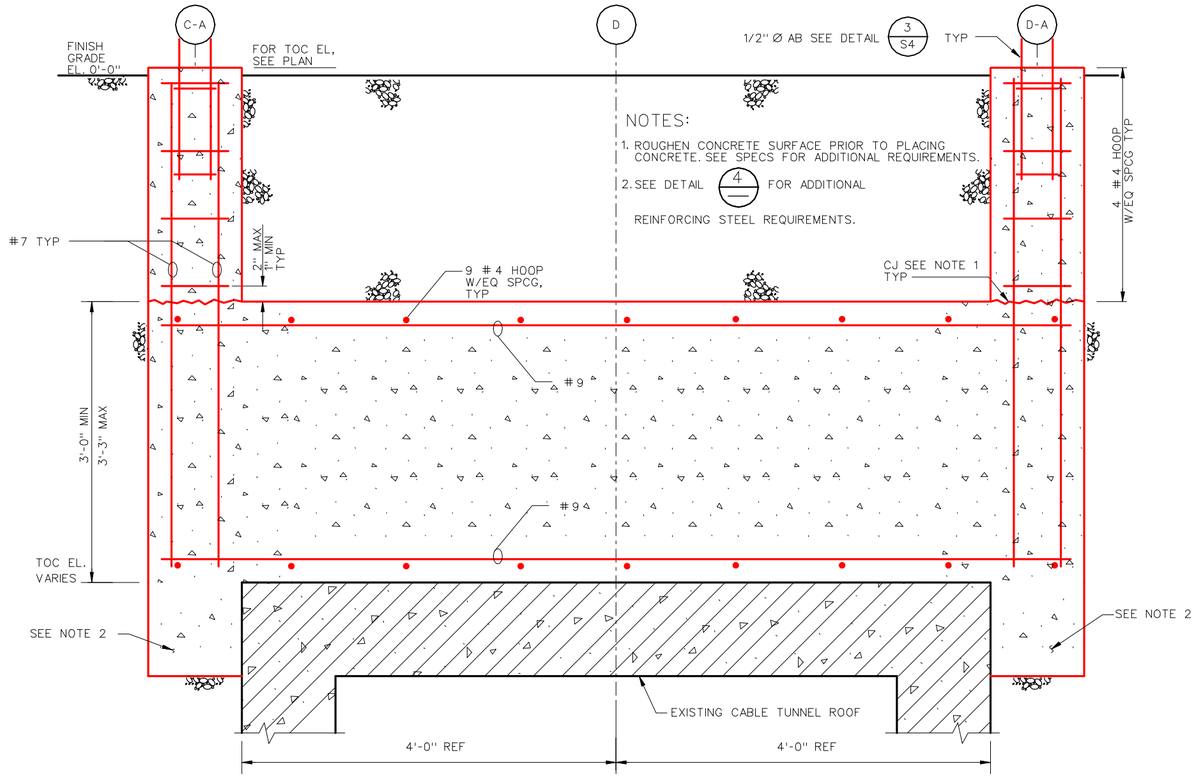

NOTES:

1. ROUGHEN CONCRETE SURFACE PRIOR TO PLACING CONCRETE. SEE SPECS FOR ADDITIONAL REQUIREMENTS.
2. SEE DETAIL 4/— FOR ADDITIONAL REINFORCING STEEL REQUIREMENTS.

3/S3 REINFORCING SECTION

SCALE: 3" = 1'-0"

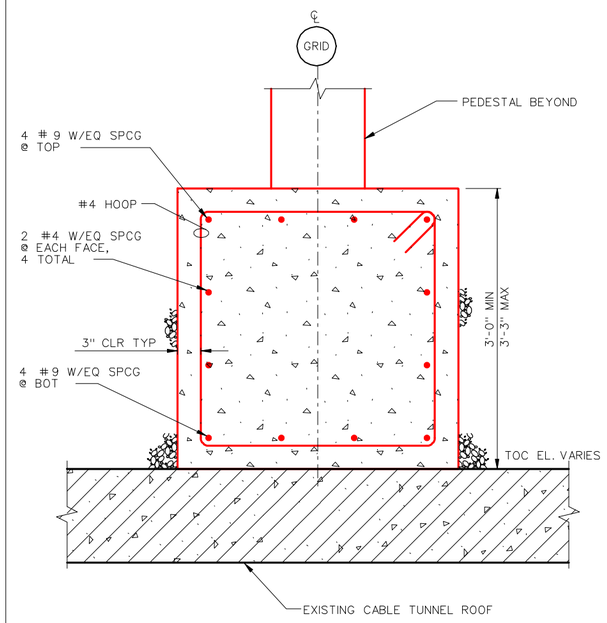

1/S3 REINFORCING SECTION

SCALE: 3" = 1'-0"

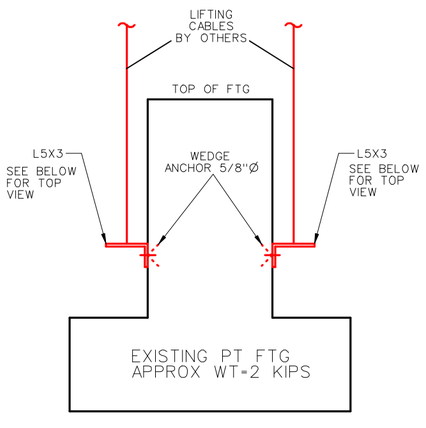

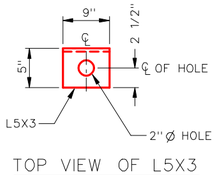

TOP VIEW OF L5X3

6/— SECTION 1-1

SCALE: 3" = 1'-0"

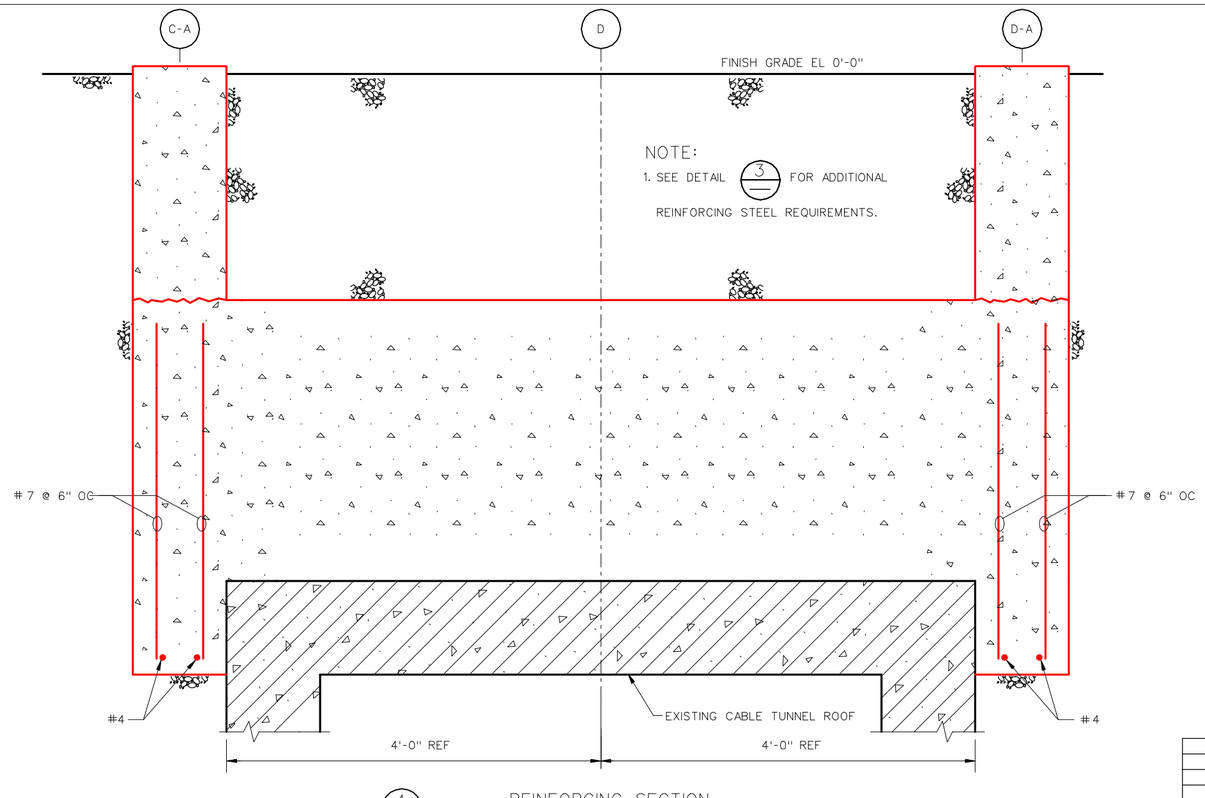

NOTE:

1. SEE DETAIL 3/— FOR ADDITIONAL REINFORCING STEEL REQUIREMENTS.

4/— REINFORCING SECTION

SCALE: 3" = 1'-0"

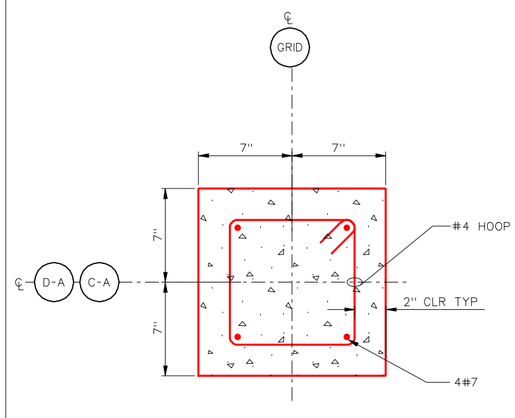

2/S3 TYPICAL PEDESTAL REINFORCING DETAIL

SCALE: 3" = 1'-0"

SYMBOL	ZONE	DESCRIPTION	DATE	BY

REVISIONS

HYDROELECTRIC DESIGN CENTER
PORTLAND, OR

U.S. ARMY ENGINEER DISTRICT
CORPS OF ENGINEERS
SAVANNAH, GEORGIA

HARTWELL MAJOR REHABILITATION - PHASE 2
HARTWELL DAM AND LAKE
SWITCHYARD UPGRADE
STRUCTURAL DETAILS
SHEET 3
SAVANNAH RIVER GEORGIA AND S. CAROLINA

SIZE	SOLICITATION NO.	FILE NO.	PLATE
F	DACW21-03-B-0007	HAR0157	S-06

SCALE: SHEET 16

HAP103TB.DGN HAP103S06.DGN

...\Har0157\03B07w\HAP103S06.dgn 03/24/2003 12:21:47 PM

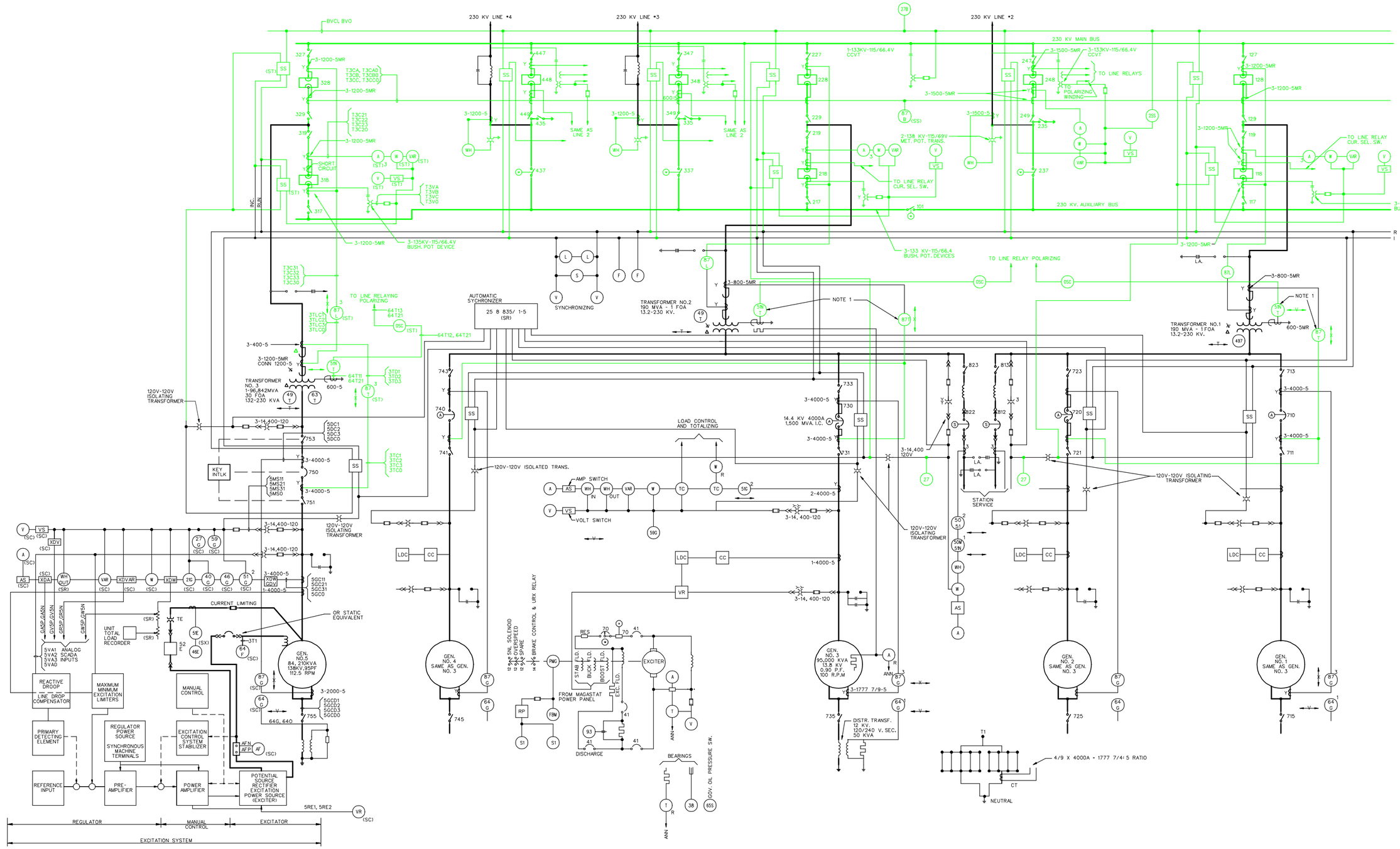

SYMBOLS:

- INDICATING INSTRUMENTS: A-AMPS, V-VOLTS, VAR-VARS, W-WATTS, F-FREQUENCY, S-SYNCHROSCOPE, WH-WATTHOUR, SI-SPEED INDICATOR
- TC THERMAL CONVERTER
- PMG PERMANENT MAGNET GENERATOR
- LDC LINE DROP COMPENSATOR
- U25 SYNCHRONISM- LIVE BUS- DEAD LINE, LIVE LINE-DEAD BUS CHECK RELAY
- BUSHING TYPE CURRENT TRANFORMER
- S1 SPEED INDICATOR
- NEW ADDITIONS
- DSC INSTRUMENT TEST PLUG
- INSTRUMENT SWITCH: A-AMMETER, VS-VOLTMETER SW, SS-SYNCHRONIZING SW
- FBM FLY BALL MOTOR
- CC CROSS CURRENT COMPENSATOR
- AIR CIRCUIT BREAKER, S-SOLENOID OPERATED, A-PNEUMATIC
- BUSHING POTENTIAL DEVICE
- XDW WATT TRANSDUCER
- ELECTRICAL EQUIPMENT OR STRUCTURE TO BE REMOVED
- RECORDING INSTRUMENTS, VAR- VARS, W-WATTS, T-TEMPERATURE, F-FREQUENCY, V-VOLTS
- RELAY NUMBER: ASA DEVICE FUNCTION NUMBER
- VR VOLTAGE REGULATOR
- RP RECTIFIER-RESISTOR PACK
- CURRENT TRANSFORMER
- SSG SPEED SIGNAL GENERATOR
- EXISTING ELECTRICAL EQUIPMENT OR STRUCTURE

NOTES:

1. 87T/51NT RELAY FOR TRANSFORMERS 1 AND 2 SHALL BE RE-USED. SEE DRAWING E-02.

SYMBOL	ZONE	DESCRIPTION	DATE	BY
		REVISIONS		

HYDROELECTRIC DESIGN CENTER
PORTLAND, OR

U.S. ARMY ENGINEER DISTRICT
CORPS OF ENGINEERS
SAVANNAH, GEORGIA

HARTWELL MAJOR REHABILITATION - PHASE 2
HARTWELL DAM AND LAKE
SWITCHYARD UPGRADE
MAIN ONE-LINE DIAGRAM
EQUIPMENT REMOVAL
SAVANNAH RIVER GEORGIA AND S. CAROLINA

SIZE	SOLICITATION NO.	FILE NO.	PLATE
F	DACW21-03-B-0007	HAR0157	E-01

SCALE: SHEET 17

HAP103TB.DGN HAP103E01.DGN

...\Har0157\03B07w\HAP103E01.dgn 03/24/2003 10:32:07 AM

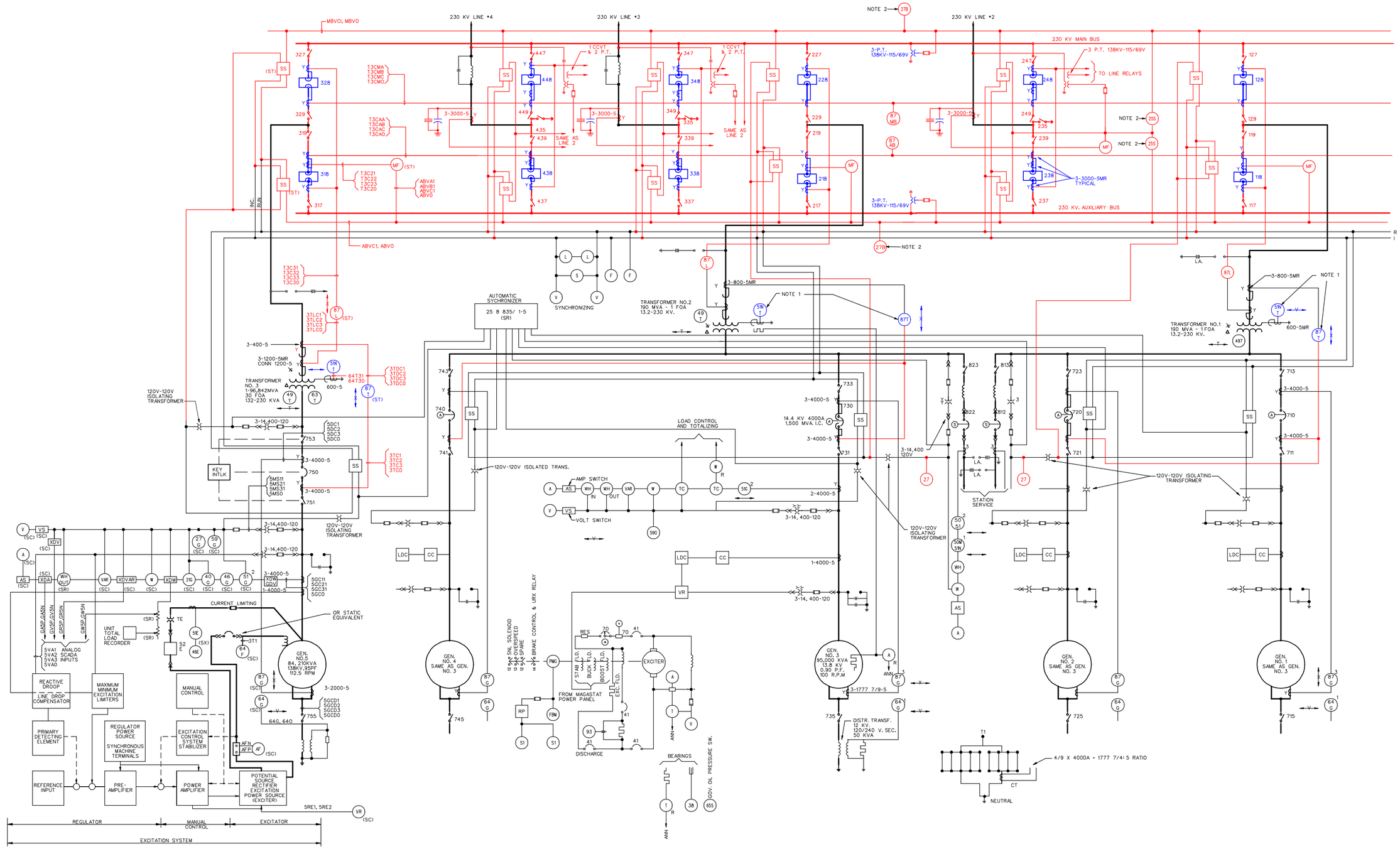

SYMBOLS:

- INDICATING INSTRUMENTS: A-AMPS, V-VOLTS, VAR-VARS, W-WATTS, F-FREQUENCY, S-SYNCHROSCOPE, WH-WATTHOUR, SI-SPEED INDICATOR, MF - MULTIFUNCTION
- TC THERMAL CONVERTER
- PMG PERMANENT MAGNET GENERATOR
- LDC LINE DROP COMPENSATOR
- U25 SYNCHRONISM- LIVE BUS- DEAD LINE, LIVE LINE-DEAD BUS CHECK RELAY
- BUSHING TYPE CURRENT TRANFORMER
- S1 SPEED INDICATOR
- NEW ADDITIONS
- DSC INSTRUMENT TEST PLUG
- INSTRUMENT SWITCH: A-AMMETER, VS-VOLTMETER SW, SS-SYNCHRONIZING SW
- FBM FLY BALL MOTOR
- CC CROSS CURRENT COMPENSATOR
- AIR CIRCUIT BREAKER, S-SOLENOID OPERATED, A-PNEUMATIC
- XDW WATT TRANSDUCER
- ELECTRICAL EQUIPMENT OR STRUCTURE TO BE REMOVED
- BUSHING POTENTIAL DEVICE
- RECORDING INSTRUMENTS, VAR- VARS, W-WATTS, T-TEMPERATURE, F-FREQUENCY, V-VOLTS
- RELAY NUMBER: ASA DEVICE FUNCTION NUMBER
- VR VOLTAGE REGULATOR
- RP RECTIFIER-RESISTOR PACK
- CURRENT TRANSFORMER
- SSG SPEED SIGNAL GENERATOR
- EXISTING ELECTRICAL EQUIPMENT OR STRUCTURE

NOTES:

1. 87T/51NT RELAY FOR TRANSFORMERS 1 AND 2 SHALL BE RE-USED. SEE DRAWING E-01.
2. THE 27B AND 25S FUNCTIONALITY SHALL BE IN THE MULTIFUNCTION LINE PROTECTION RELAYS.

SYMBOL	ZONE	DESCRIPTION	DATE	BY

REVISIONS

HYDROELECTRIC DESIGN CENTER
PORTLAND, OR

U.S. ARMY ENGINEER DISTRICT
CORPS OF ENGINEERS
SAVANNAH, GEORGIA

HARTWELL MAJOR REHABILITATION - PHASE 2
HARTWELL DAM AND LAKE
SWITCHYARD UPGRADE
MAIN ONE-LINE DIAGRAM
NEW EQUIPMENT
SAVANNAH RIVER GEORGIA AND S. CAROLINA

SIZE	SOLICITATION NO.	FILE NO.	PLATE
F	DACW21-03-B-0007	HAR0157	E-02

SCALE: SHEET 18

HAP103TB.DGN HAP103E02.DGN

...\Har0157\03B07w\HAP103E02.dgn 03/24/2003 10:33:26 AM

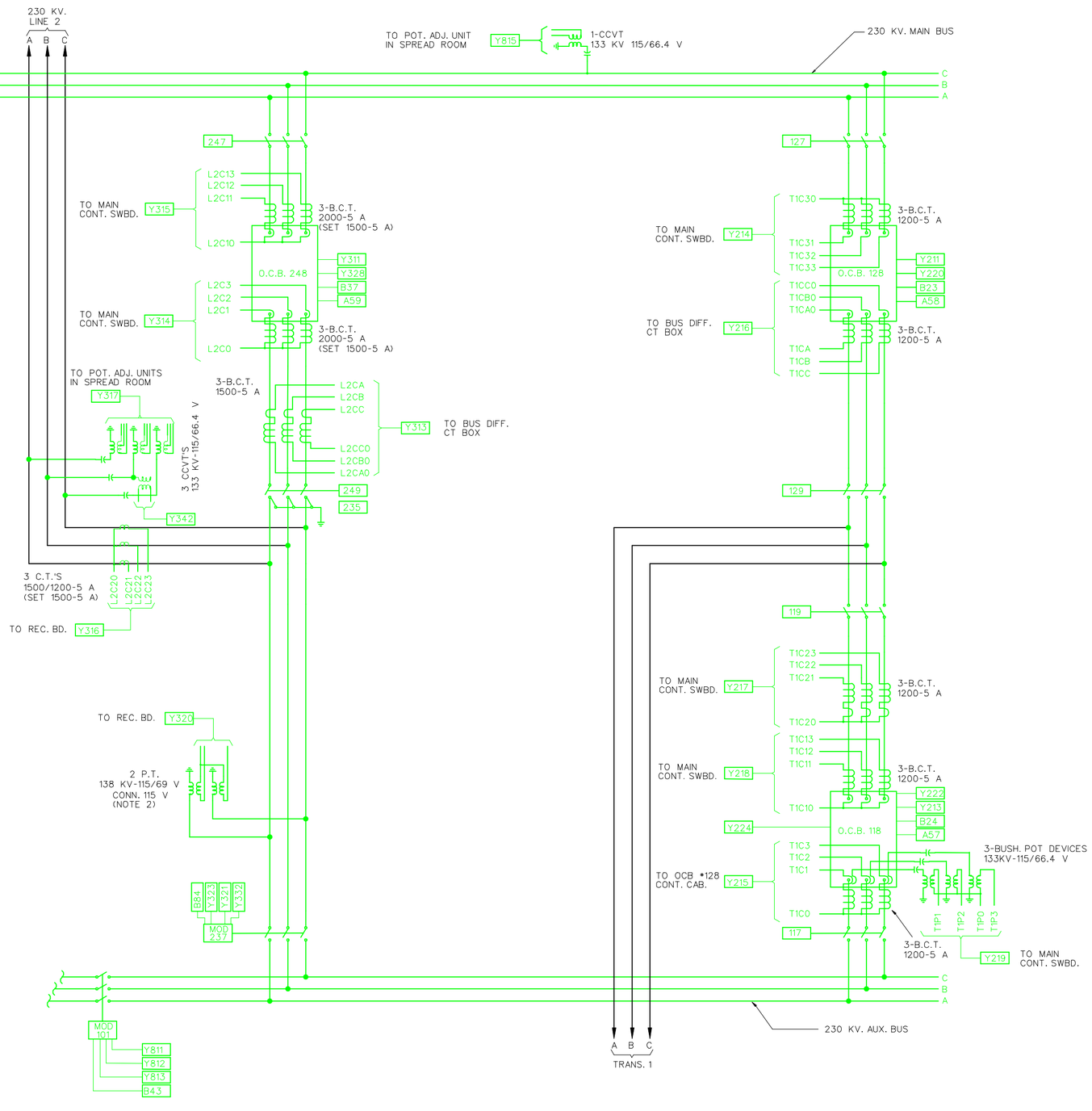

BAY 3
LINE 2
(GEORGIA POWER)

BAY 2
TRANSFORMER 1

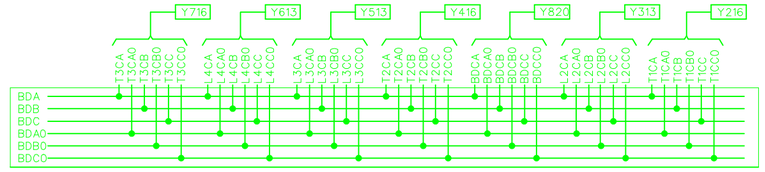

230 KV. SWITCHYARD BUS DIFF. C.T. BOX Y4
LOCATED IN SWITCHYARD TUNNEL

SYMBOLS:

- OIL CIRCUIT BREAKER
- CURRENT TRANSFORMER
- BUSHING TYPE CURRENT TRANSFORMER, MULTI-RATIO
- POTENTIAL TRANSFORMER
- BUSHING POTENTIAL DEVICE

REFERENCE DRAWING

HA5E-376 FULL LINE DIAGRAM SWITCHYARD

NOTES:

1. CONNECTED RATIO OF ALL CURRENT TRANSFORMERS SHALL BE 1200-5 A EXCEPT AS INDICATED.
2. LINE PT'S SHALL BE RELOCATED TO THE MAIN BUS. SEE DRAWING E-04.

SYMBOL	ZONE	DESCRIPTION	DATE	BY

REVISIONS

HYDROELECTRIC DESIGN CENTER
PORTLAND, OR

U.S. ARMY ENGINEER DISTRICT
CORPS OF ENGINEERS
SAVANNAH, GEORGIA

HARTWELL MAJOR REHABILITATION - PHASE 2
HARTWELL DAM AND LAKE
SWITCHYARD UPGRADE
MAIN THREE-LINE, BAYS 2 AND 3
EQUIPMENT REMOVAL
SAVANNAH RIVER GEORGIA AND S. CAROLINA

SIZE	SOLICITATION NO.	FILE NO.	PLATE
F	DACW21-03-B-0007	HAR0157	E-03

SCALE: NONE
SHEET 19

4 OCTOBER 2002
09:45

HAP103TB.DGN
HAP103E03.DGN

...\Har0157\03B07w\HAP103E03.DGN 03/24/2003 10:34:35 AM

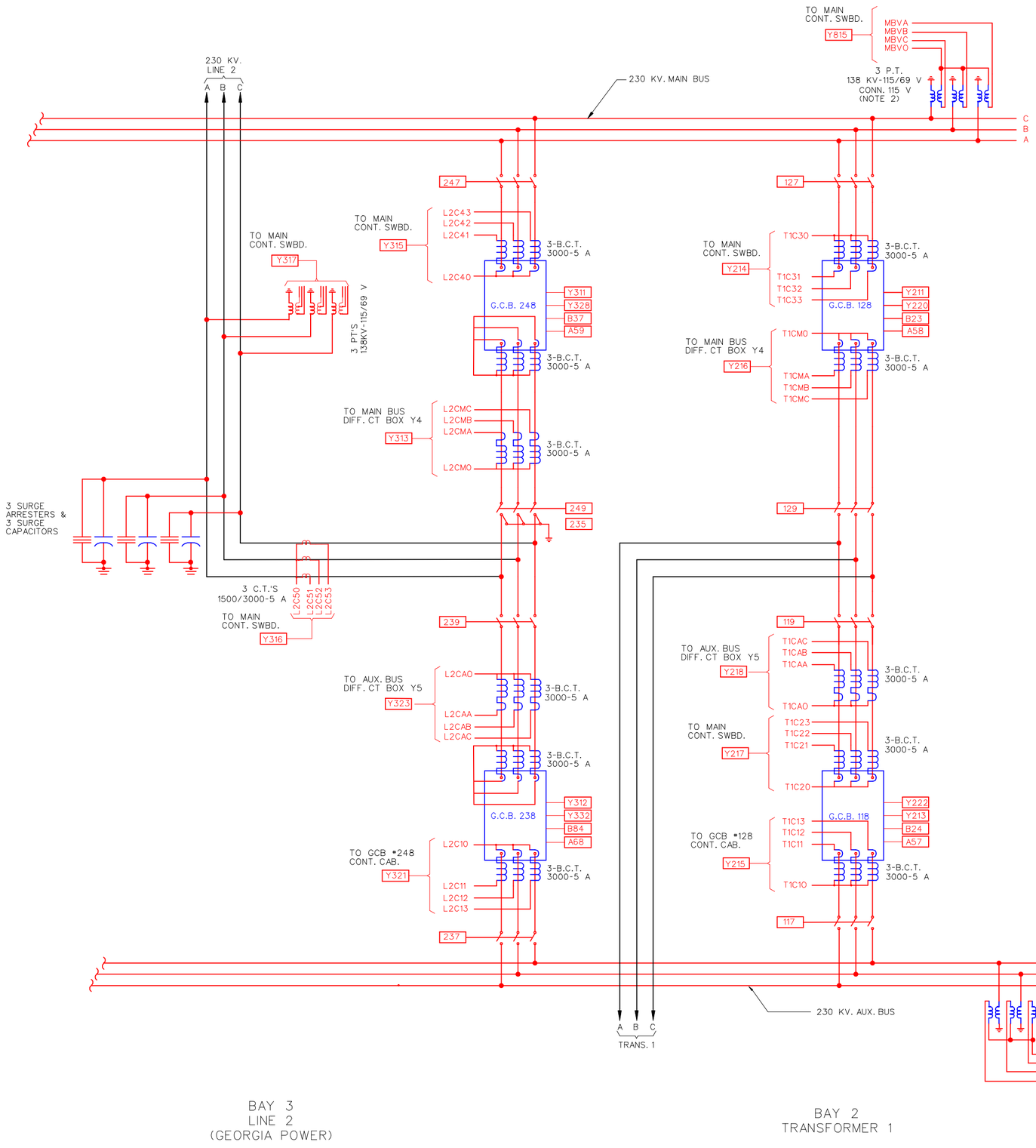

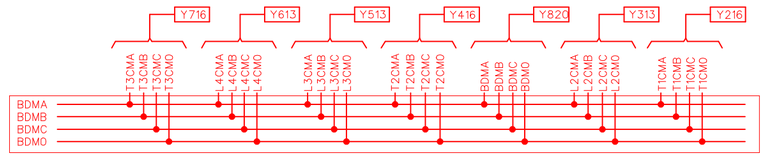

230 KV. SWITCHYARD MAIN BUS DIFF. C.T. BOX Y4
LOCATE IN SWITCHYARD TUNNEL

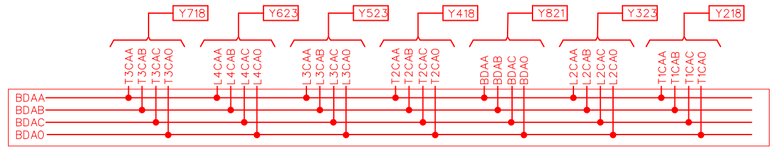

230 KV. SWITCHYARD AUXILIARY BUS DIFF. C.T. BOX Y5
LOCATE IN SWITCHYARD TUNNEL

SYMBOLS:

- GAS CIRCUIT BREAKER
- CURRENT TRANSFORMER
- BUSHING TYPE CURRENT TRANSFORMER, MULTI-RATIO
- POTENTIAL TRANSFORMER

NOTES:

1. CONNECTED RATIO OF ALL CURRENT TRANSFORMERS SHALL BE 1500-5 A EXCEPT AS INDICATED.
2. SYNCHRONIZING PT'S SHALL BE RELOCATED FROM LINES 2-4, SEE DRAWINGS E-03, E-05, AND E-07. SEE ALSO E-42.

SYMBOL	ZONE	DESCRIPTION	DATE	BY

REVISIONS

HYDROELECTRIC DESIGN CENTER
PORTLAND, OR

U.S. ARMY ENGINEER DISTRICT
CORPS OF ENGINEERS
SAVANNAH, GEORGIA

HARTWELL MAJOR REHABILITATION - PHASE 2
HARTWELL DAM AND LAKE
SWITCHYARD UPGRADE
MAIN THREE-LINE, BAYS 2 AND 3
NEW EQUIPMENT
SAVANNAH RIVER GEORGIA AND S. CAROLINA

SIZE	SOLICITATION NO.	FILE NO.	PLATE
F	DACW21-03-B-0007	HAR0157	E-04

SCALE: NONE SHEET 20

HAP103TB.DGN HAP103E04.DGN

...\Har0157\03B07w\HAP103E04.dgn 03/24/2003 10:35:09 AM

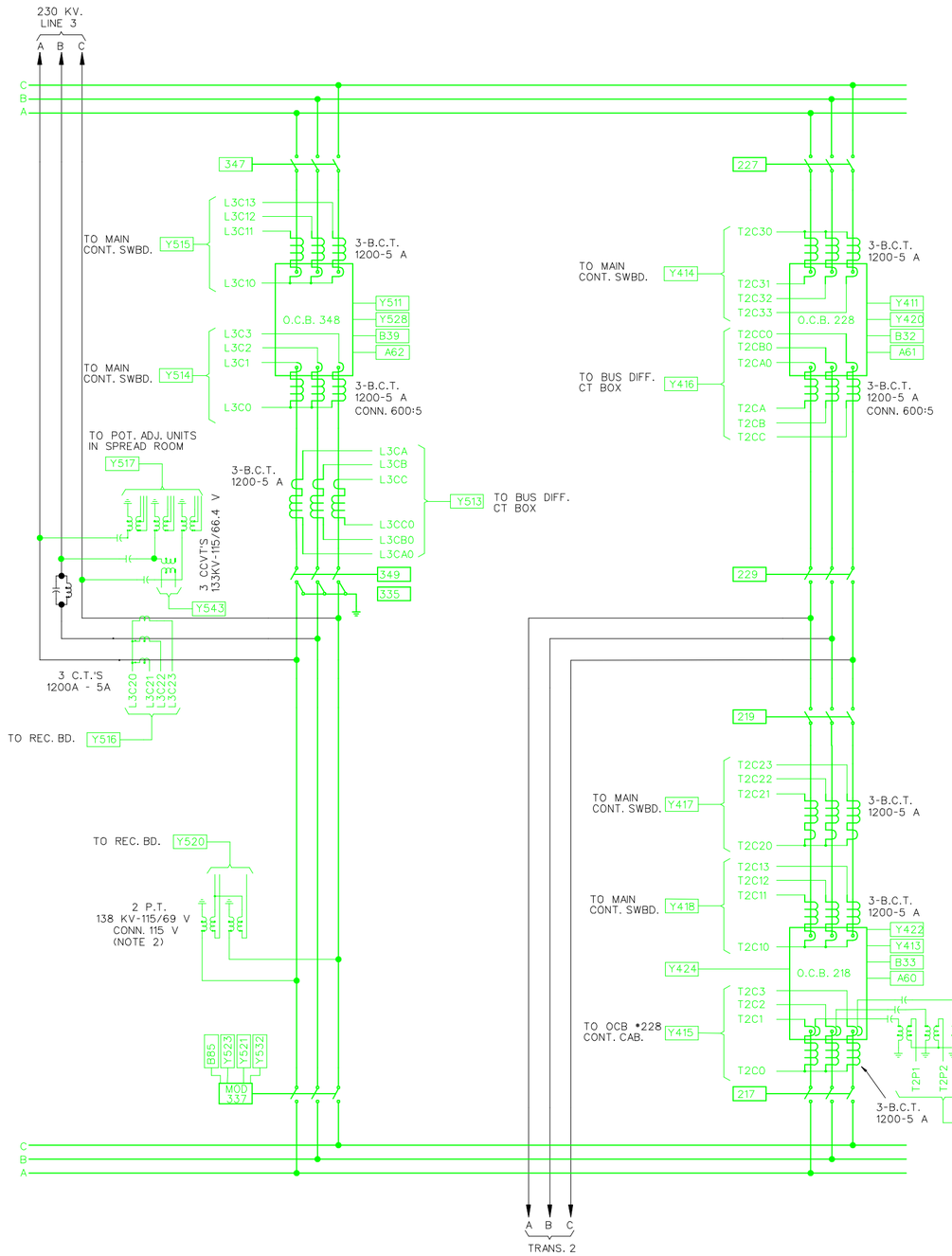

BAY 5
LINE 3
(DUKE POWER)

BAY 4
TRANSFORMER 2

SYMBOLS:

- OIL CIRCUIT BREAKER
- CURRENT TRANSFORMER
- BUSHING TYPE CURRENT TRANSFORMER, MULTI-RATIO
- POTENTIAL TRANSFORMER
- BUSHING POTENTIAL DEVICE

REFERENCE DRAWING

HA5E-376 FULL LINE DIAGRAM SWITCHYARD

NOTES:

1. CONNECTED RATIO OF ALL CURRENT TRANSFORMERS SHALL BE 1200-5 A EXECPT AS INDICATED.
2. LINE PT'S SHALL BE RELOCATED TO THE MAIN AND AUXILIARY BUSES. SEE DRAWING E-04.

SYMBOL	ZONE	DESCRIPTION	DATE	BY

REVISIONS

HYDROELECTRIC DESIGN CENTER
PORTLAND, OR

U.S. ARMY ENGINEER DISTRICT
CORPS OF ENGINEERS
SAVANNAH, GEORGIA

HARTWELL MAJOR REHABILITATION - PHASE 2
HARTWELL DAM AND LAKE
SWITCHYARD UPGRADE
MAIN THREE-LINE, BAYS 4 AND 5
EQUIPMENT REMOVAL
SAVANNAH RIVER GEORGIA AND S. CAROLINA

SIZE	SOLICITATION NO.	FILE NO.	PLATE
F	DACW21-03-B-0007	HAR0157	E-05

SCALE: NONE SHEET 21

HAP103TB.DGN HAP103E05.DGN

...\Har0157\03B07w\HAP103E05.DGN 03/25/2003 03:26:53 PM

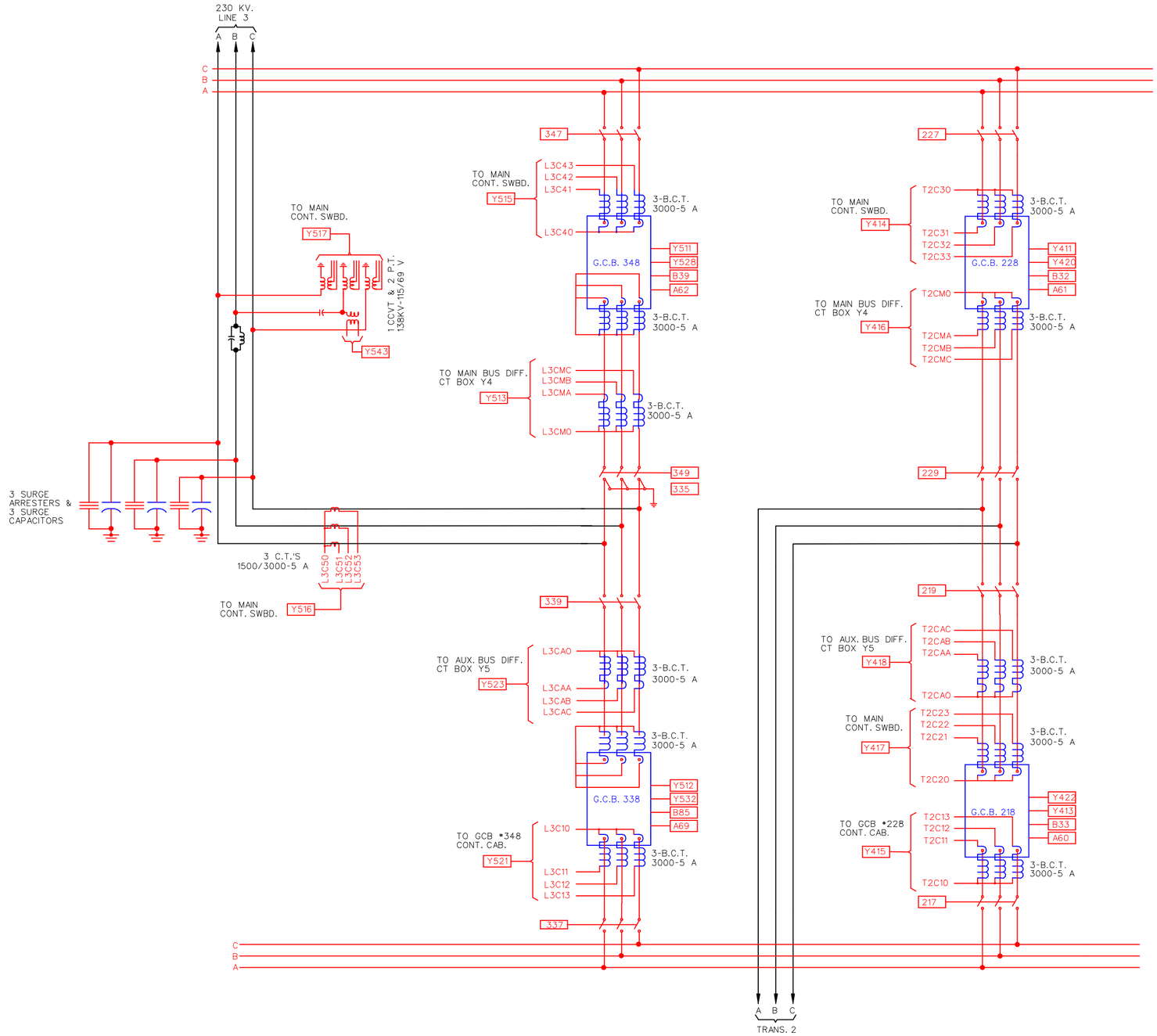

SYMBOLS:

- GAS CIRCUIT BREAKER
- CURRENT TRANSFORMER
- BUSHING TYPE CURRENT TRANSFORMER, MULTI-RATIO
- POTENTIAL TRANSFORMER

NOTES:

1. CONNECTED RATIO OF ALL CURRENT TRANSFORMERS SHALL BE 1500-5 A EXECPT AS INDICATED.

BAY 5
LINE 3
(DUKE POWER)

BAY 4
TRANSFORMER 2

SYMBOL	ZONE	DESCRIPTION	DATE	BY

REVISIONS

HYDROELECTRIC DESIGN CENTER
PORTLAND, OR

U.S. ARMY ENGINEER DISTRICT
CORPS OF ENGINEERS
SAVANNAH, GEORGIA

HARTWELL MAJOR REHABILITATION - PHASE 2
HARTWELL DAM AND LAKE
SWITCHYARD UPGRADE
MAIN THREE-LINE, BAYS 4 AND 5
NEW EQUIPMENT
SAVANNAH RIVER GEORGIA AND S. CAROLINA

SIZE	SOLICITATION NO.	FILE NO.	PLATE
F	DACW21-03-B-0007	HAR0157	E-06

SCALE: SHEET 22

HAP103TB.DGN HAP103E06.DGN

...\Har0157\03B07w\HAP103E06.dgn 03/24/2003 10:36:12 AM

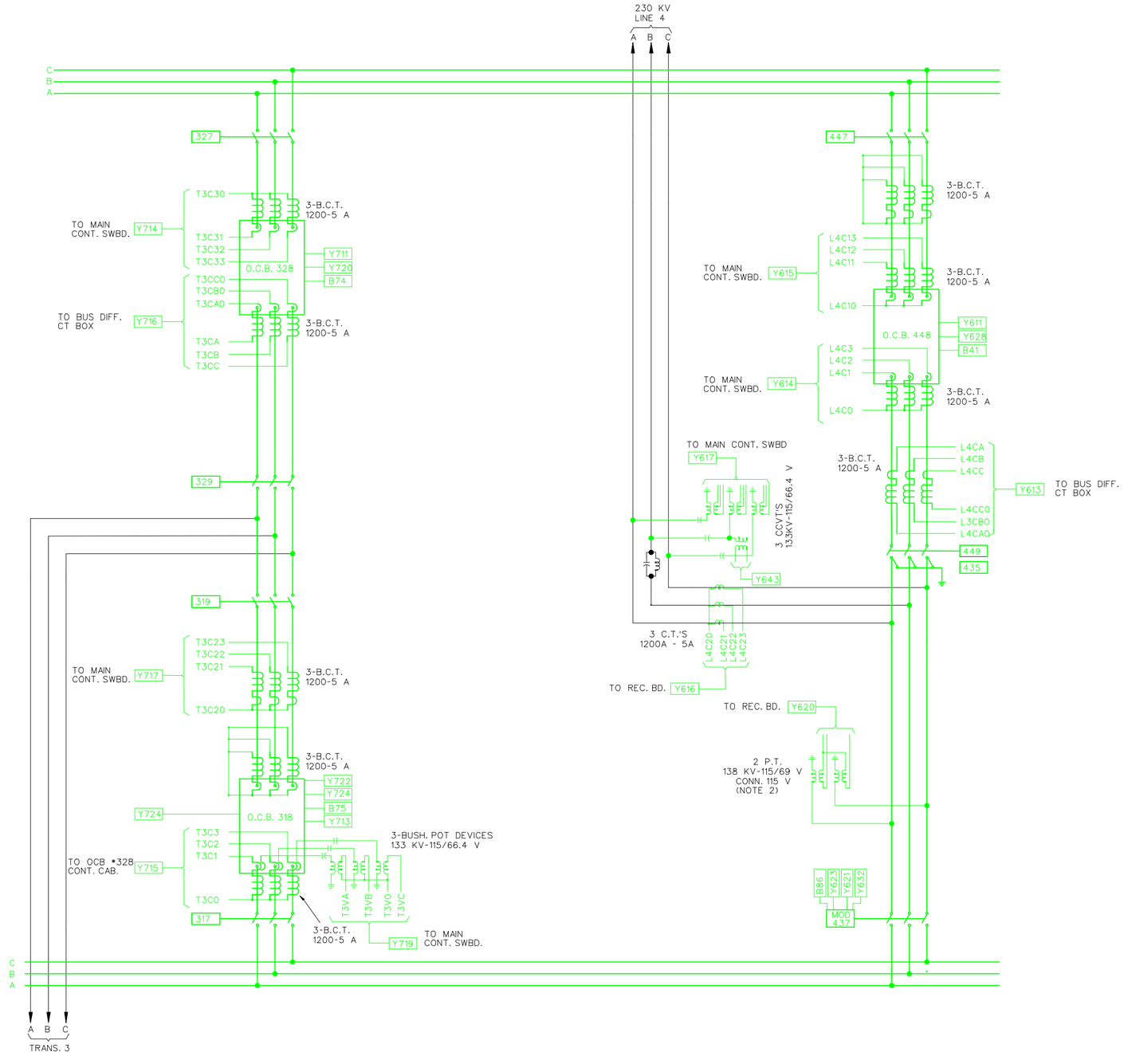

BAY 7
TRANSFORMER 3

BAY 6
LINE 4
(DUKE POWER)

SYMBOLS:

- OIL CIRCUIT BREAKER
- CURRENT TRANSFORMER
- BUSHING TYPE CURRENT TRANSFORMER, MULTI-RATIO
- POTENTIAL TRANSFORMER
- BUSHING POTENTIAL DEVICE

REFERENCE DRAWING

HA5E-376 FULL LINE DIAGRAM SWITCHYARD

NOTES:

1. CONNECTED RATIO OF ALL CURRENT TRANSFORMERS SHALL BE 1200-5 A EXECPT AS INDICATED.
2. LINE PT'S SHALL BE RELOCATED TO THE AUXILIARY BUS. SEE DRAWING E-04.

SYMBOL	ZONE	DESCRIPTION	DATE	BY

REVISIONS

HYDROELECTRIC DESIGN CENTER
PORTLAND, OR

U.S. ARMY ENGINEER DISTRICT
CORPS OF ENGINEERS
SAVANNAH, GEORGIA

HARTWELL MAJOR REHABILITATION - PHASE 2
HARTWELL DAM AND LAKE
SWITCHYARD UPGRADE
MAIN THREE-LINE, BAYS 6 AND 7
EQUIPMENT REMOVAL
SAVANNAH RIVER GEORGIA AND S. CAROLINA

SIZE	SOLICITATION NO.	FILE NO.	PLATE
F	DACW21-03-B-0007	HAR0157	E-07

SCALE NONE
SHEET 23

HAP103TB.DGN
HAP103E07.DGN

...\Har0157\03B07w\HAP103E07.dgn 03/24/2003 10:36:40 AM

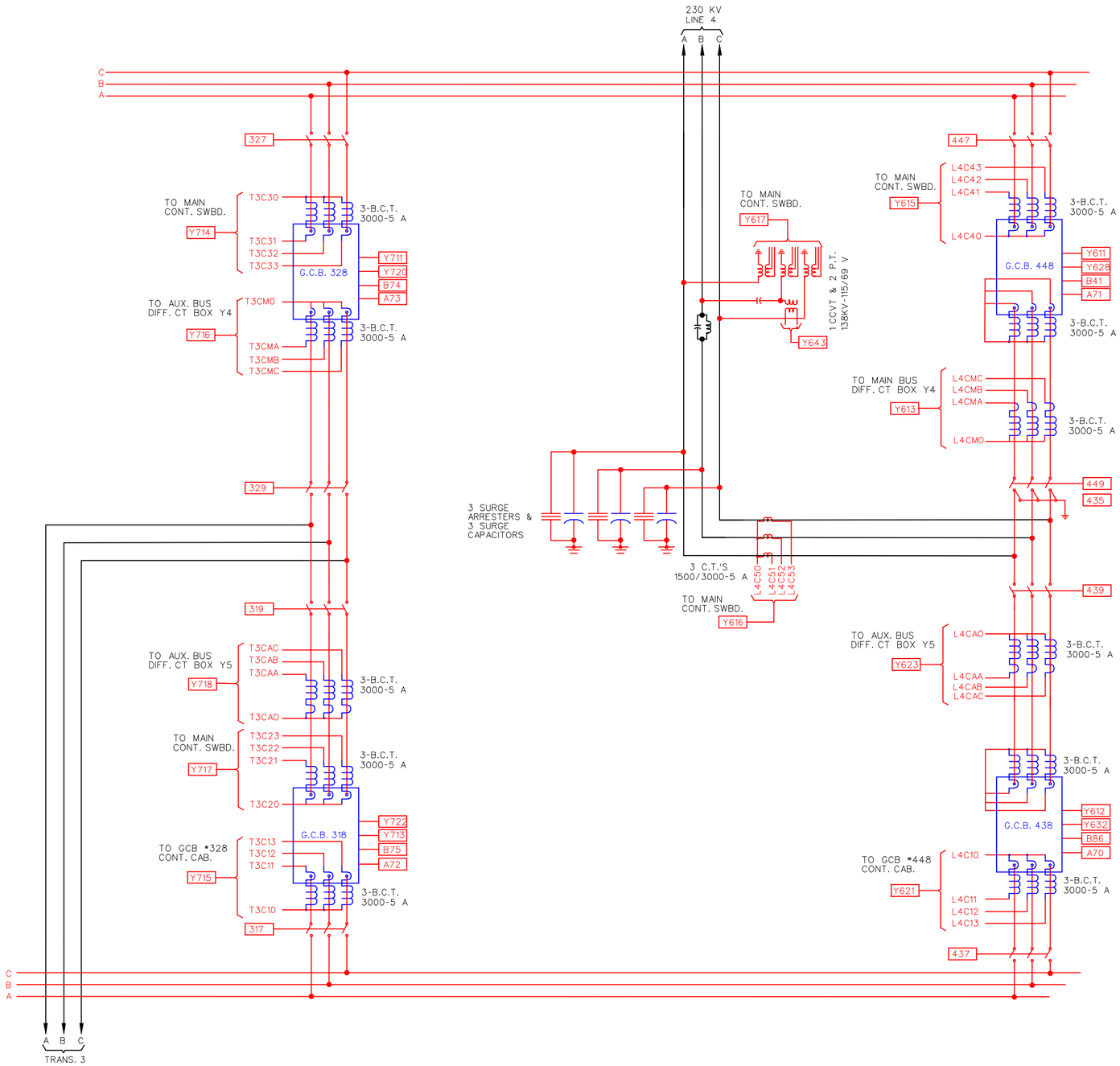

BAY 7
TRANSFORMER 3

BAY 6
LINE 4
(DUKE POWER)

SYMBOLS:

- GAS CIRCUIT BREAKER
- CURRENT TRANSFORMER
- BUSHING TYPE CURRENT TRANSFORMER, MULTI-RATIO
- POTENTIAL TRANSFORMER

NOTES:

1. CONNECTED RATIO OF ALL CURRENT TRANSFORMERS SHALL BE 1500-5 A EXECPT AS INDICATED.

SYMBOL	ZONE	DESCRIPTION	DATE	BY

REVISIONS

HYDROELECTRIC DESIGN CENTER
PORTLAND, OR

U.S. ARMY ENGINEER DISTRICT
CORPS OF ENGINEERS
SAVANNAH, GEORGIA

HARTWELL MAJOR REHABILITATION - PHASE 2
HARTWELL DAM AND LAKE
SWITCHYARD UPGRADE
MAIN THREE-LINE, BAYS 6 AND 7
NEW EQUIPMENT
SAVANNAH RIVER GEORGIA AND S. CAROLINA

SIZE	SOLICITATION NO.	FILE NO.	PLATE
F	DACW21-03-B-0007	HAR0157	E-08

SCALE: NONE | SHEET 24

HAP103TB.DGN HAP103E08.DGN

...\Har0157\03B07w\HAP103E08.dgn 03/24/2003 10:37:55 AM

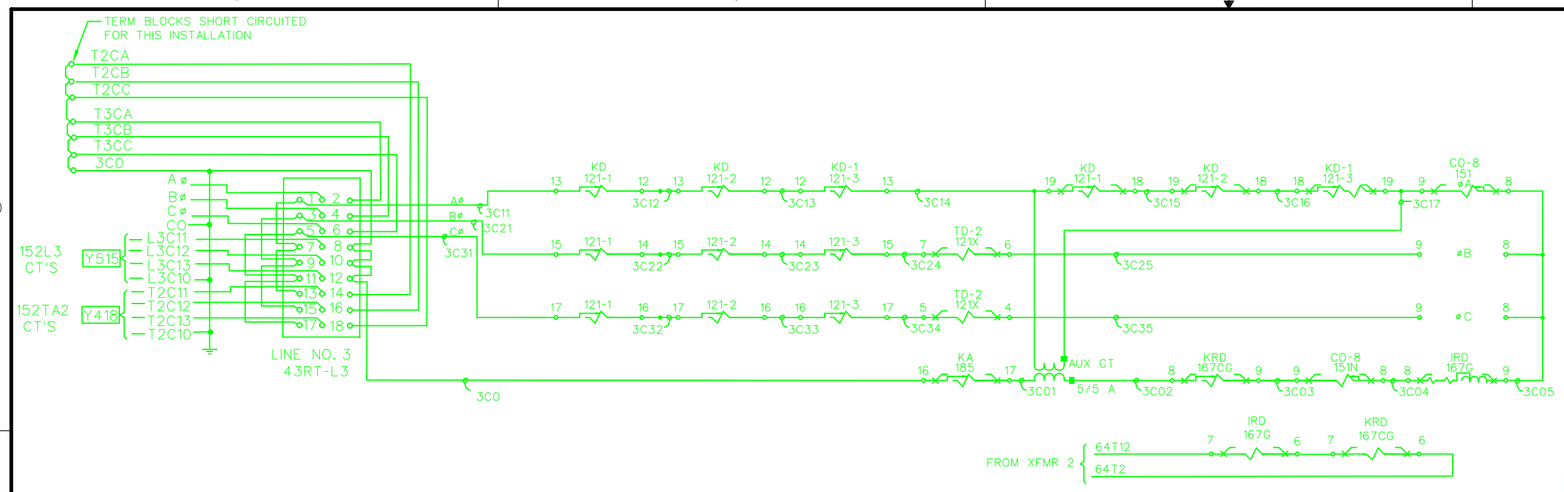

LINE NO. 3 RELAYING

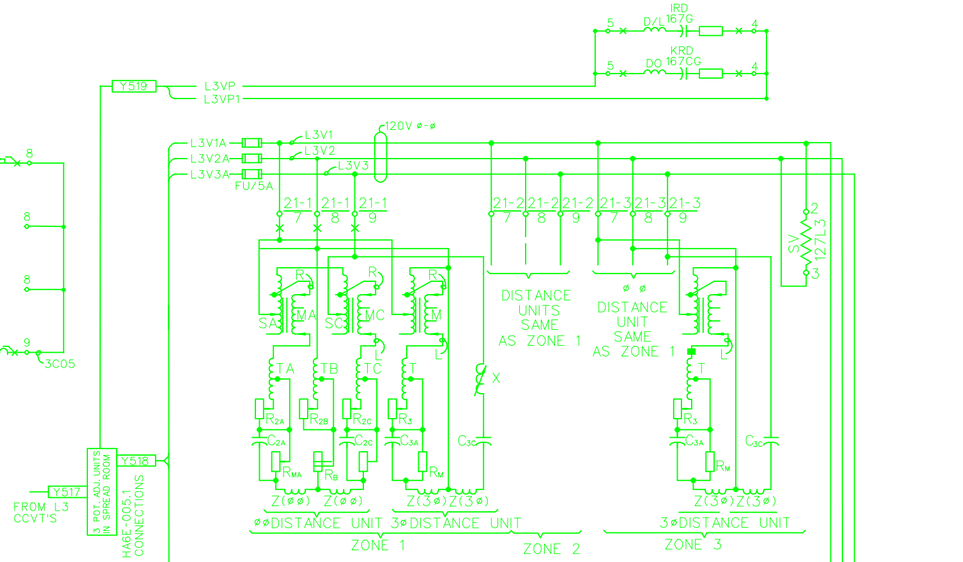

LINE NO. 3 RELAYING

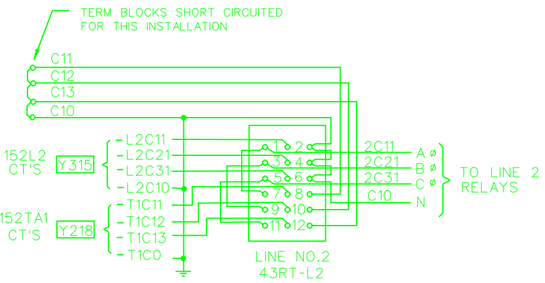

LINE NO. 2 RELAYING

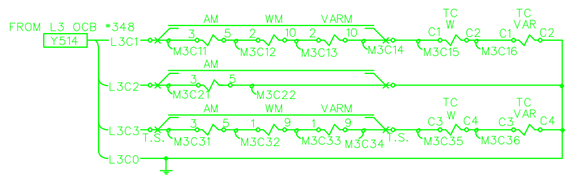

LINE NO. 3 CURRENT METERING

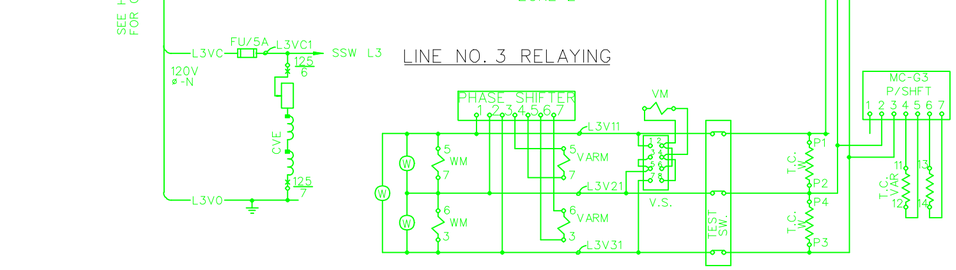

LINE NO. 3 POTENTIAL METERING

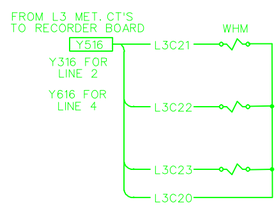

LINE NO. 3 CURRENT METERING (WHM'S)
(SIM. FOR LINES 2 & 4)

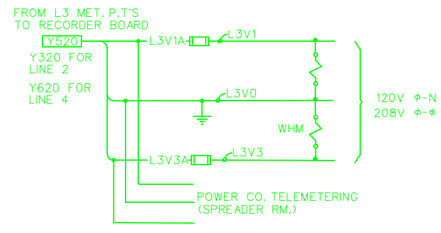

LINE NO. 3 POTENTIAL METERING (WHM'S)
(SIM. FOR LINES 2 & 4)

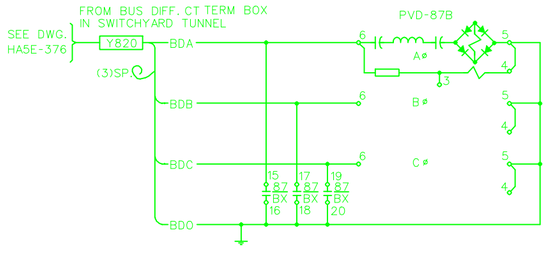

BUS DIFF. RELAYING CT'S.

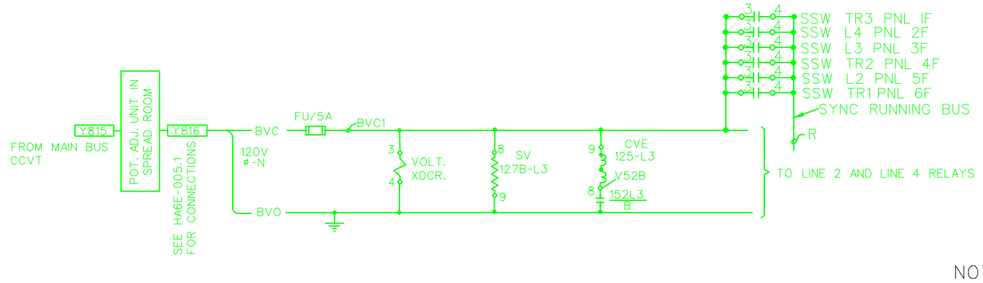

BUS POTENTIAL
ALL EQUIP. ON MAIN CONT. SWBD.

NOTES:

1. REFER TO LEGEND ON DRAWING G-09.

REFERENCE DRAWINGS:

KIRKHOF:

E1591, SH. 11 SCHEMATIC DIAGRAM 230 KV SWITCHYARD

UNIT ELECTRIC CONTROL:

7569C-2 AC ELEMENTARY WIRING DIAGRAM

SYMBOL	ZONE	DESCRIPTION	DATE	BY

REVISIONS

HYDROELECTRIC DESIGN CENTER PORTLAND, OR

U.S. ARMY ENGINEER DISTRICT CORPS OF ENGINEERS SAVANNAH, GEORGIA

HARTWELL MAJOR REHABILITATION - PHASE 2
HARTWELL DAM AND LAKE
SWITCHYARD UPGRADE
LINE METERING THREE-LINE DIAGRAM
EQUIPMENT REMOVAL
SAVANNAH RIVER GEORGIA AND S. CAROLINA

SIZE	SOLICITATION NO.	FILE NO.	PLATE
F	DACW21-03-B-0007	HAR0157	E-09

SCALE: SHEET 25

18 DECEMBER 2002

HAP103TB.DGN HAP103E09.DGN

...\Har0157\03B07w\HAP103E09.dgn 03/24/2003 10:38:33 AM

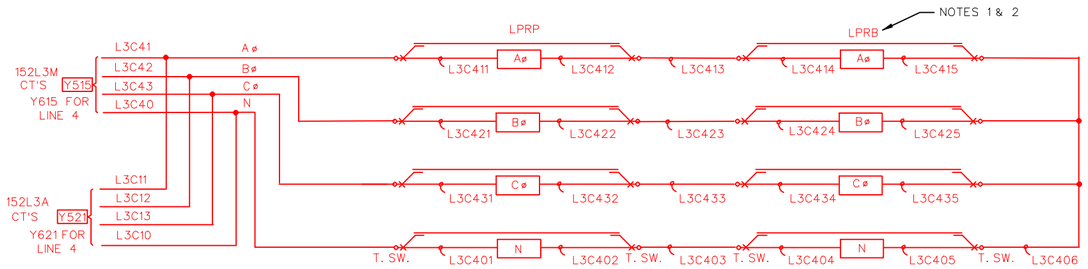

LINE NO. 3 RELAYING
(SIM. FOR LINE 4)

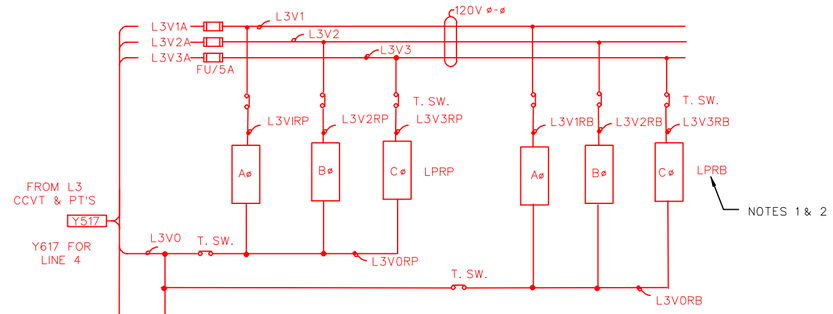

LINE NO. 3 RELAYING
(SIM. FOR LINE 4)

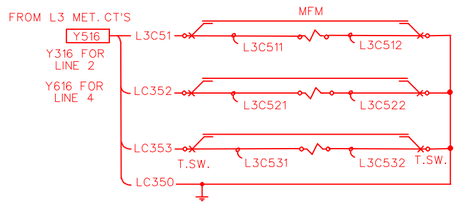

LINE NO. 3 CURRENT METERING
(SIM. FOR LINES 2 & 4)

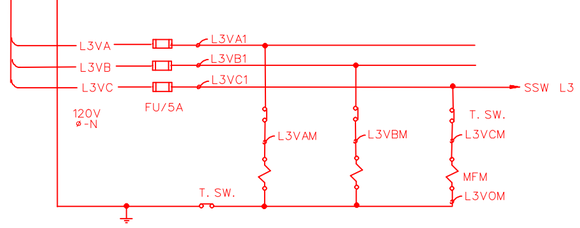

LINE NO. 3 POTENTIAL METERING
(SIM. FOR LINES 2 & 4)

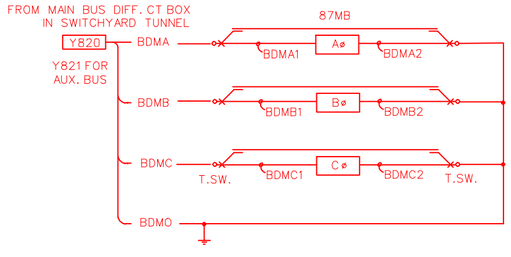

MAIN BUS DIFF. RELAYING CT'S.
(SIM. FOR AUX. BUS)

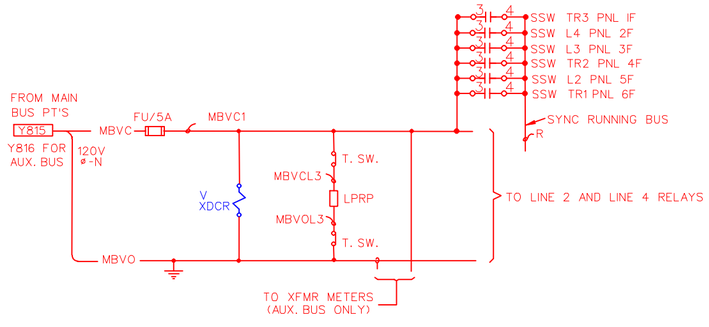

MAIN BUS POTENTIAL
(SIM. FOR AUX. BUS)

NOTES:

1. FOR LINE 2, EXISTING HCB AND LCB II RELAYS SHALL BE USED INSTEAD OF THE MULTIFUNCTION LPRB.
2. LPRB IS GFE FOR LINE 4.

SYMBOL	ZONE	DESCRIPTION	DATE	BY
		REVISIONS		

HYDROELECTRIC DESIGN CENTER
PORTLAND, OR

U.S. ARMY ENGINEER DISTRICT
CORPS OF ENGINEERS
SAVANNAH, GEORGIA

HARTWELL MAJOR REHABILITATION - PHASE 2
HARTWELL DAM AND LAKE
SWITCHYARD UPGRADE
LINE METERING THREE-LINE DIAGRAM
NEW EQUIPMENT
SAVANNAH RIVER GEORGIA AND S. CAROLINA

SIZE	SOLICITATION NO.	FILE NO.	PLATE
F	DACW21-03-B-0007	HAR0157	E-10

SCALE: | SHEET 26

18 DECEMBER 2002

HAP103TB.DGN HAP103E10.DGN

...\Har0157\03B07w\HAP103E10.dgn 03/24/2003 10:39:20 AM

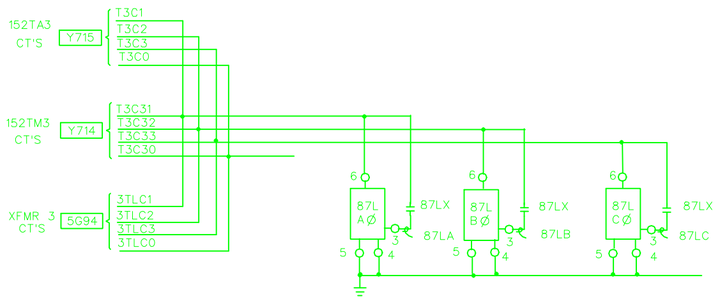

POWERHOUSE LINE NO. 3
DIFFERENTIAL RELAYING

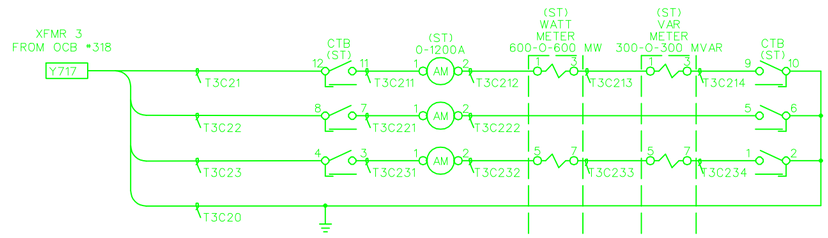

TRANSFORMER NO. 3 CURRENT METERING

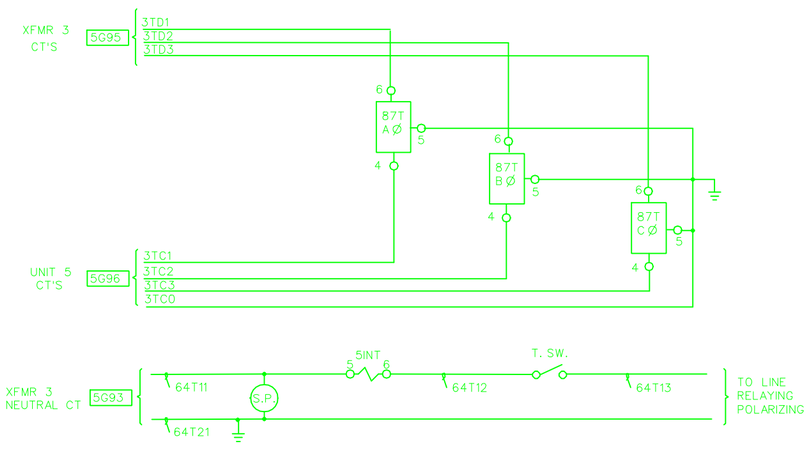

TRANSFORMER NO. 3 RELAYING

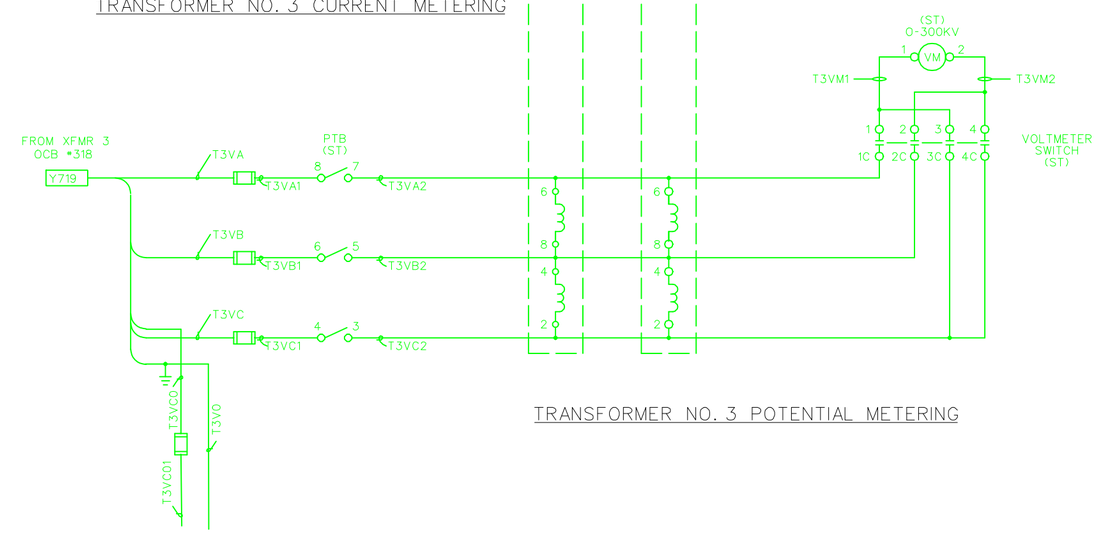

TRANSFORMER NO. 3 POTENTIAL METERING

REFERENCE DRAWINGS:

WASHINGTON ELECTRIC CONTROLS:
81223-S, SH. 2 TRANSFORMER NO. 3 THREE LINE DIAGRAM
81223-S, SH.13 OCB 318 & 328 THREE LINE DIAGRAM

SYMBOL	ZONE	DESCRIPTION	DATE	BY
		REVISIONS		

HYDROELECTRIC DESIGN CENTER
PORTLAND, OR

U.S. ARMY ENGINEER DISTRICT
CORPS OF ENGINEERS
SAVANNAH, GEORGIA

HARTWELL MAJOR REHABILITATION - PHASE 2
HARTWELL DAM AND LAKE
SWITCHYARD UPGRADE
XFMR. METERING THREE-LINE DIAGRAM
EQUIPMENT REMOVAL
SAVANNAH RIVER GEORGIA AND S. CAROLINA

SIZE	SOLICITATION NO.	FILE NO.	PLATE
F	DACW21-03-B-0007	HAR0157	E-11

SCALE: SHEET 27

© SEPTEMBER 2002

HAP103TB.DGN HAP103E11.DGN

...\Har0157\03B07w\HAP103E11.dgn 03/24/2003 10:40:01 AM

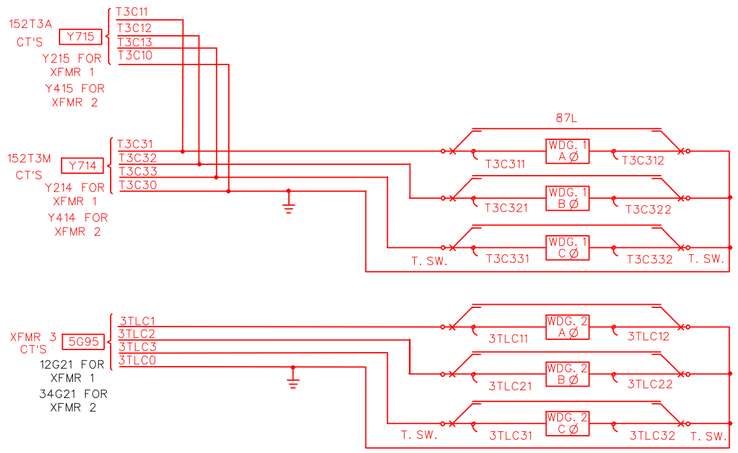

POWERHOUSE LINE NO. 3
DIFFERENTIAL RELAYING
(SIM. FOR POWERHOUSE LINES 1 & 2)

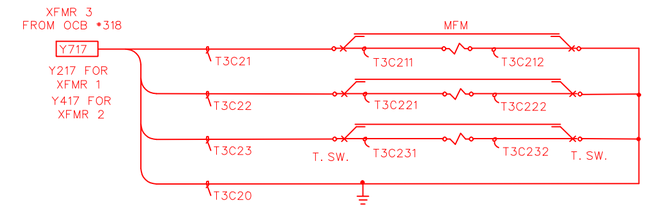

TRANSFORMER NO. 3 CURRENT METERING
(SIM. FOR TRANSFORMERS 1 & 2)

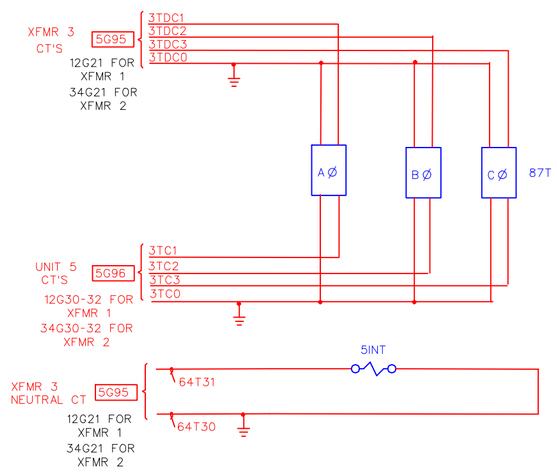

TRANSFORMER NO. 3 RELAYING
(SIM. FOR TRANSFORMERS 1 & 2)

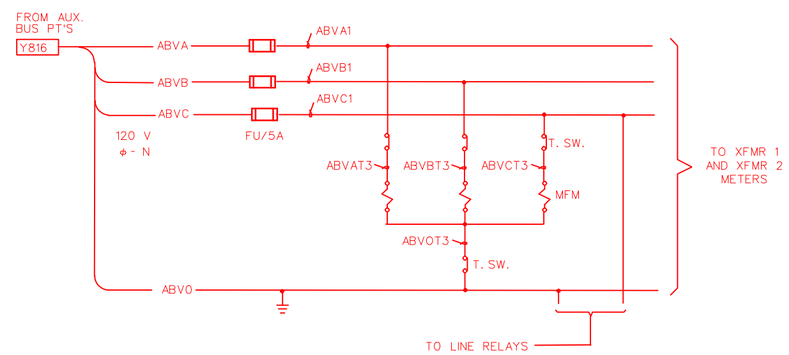

TRANSFORMER NO. 3 POTENTIAL METERING

NOTES:

1. REFER TO LEGEND ON DRAWING G-09.

SYMBOL	ZONE	DESCRIPTION	DATE	BY
		REVISIONS		

HYDROELECTRIC DESIGN CENTER
PORTLAND, OR

U.S. ARMY ENGINEER DISTRICT
CORPS OF ENGINEERS
SAVANNAH, GEORGIA

HARTWELL MAJOR REHABILITATION - PHASE 2
HARTWELL DAM AND LAKE
SWITCHYARD UPGRADE
XFMR. METERING THREE-LINE DIAGRAM
NEW EQUIPMENT
SAVANNAH RIVER GEORGIA AND S. CAROLINA

SIZE	SOLICITATION NO.	FILE NO.	PLATE
F	DACW21-03-B-0007	HAR0157	E-12

SCALE: SHEET 28

HAP103TB.DGN HAP103E12.DGN

4 OCTOBER 2002

...\Har0157\03B07w\HAP103E12.dgn 03/24/2003 10:49:29 AM

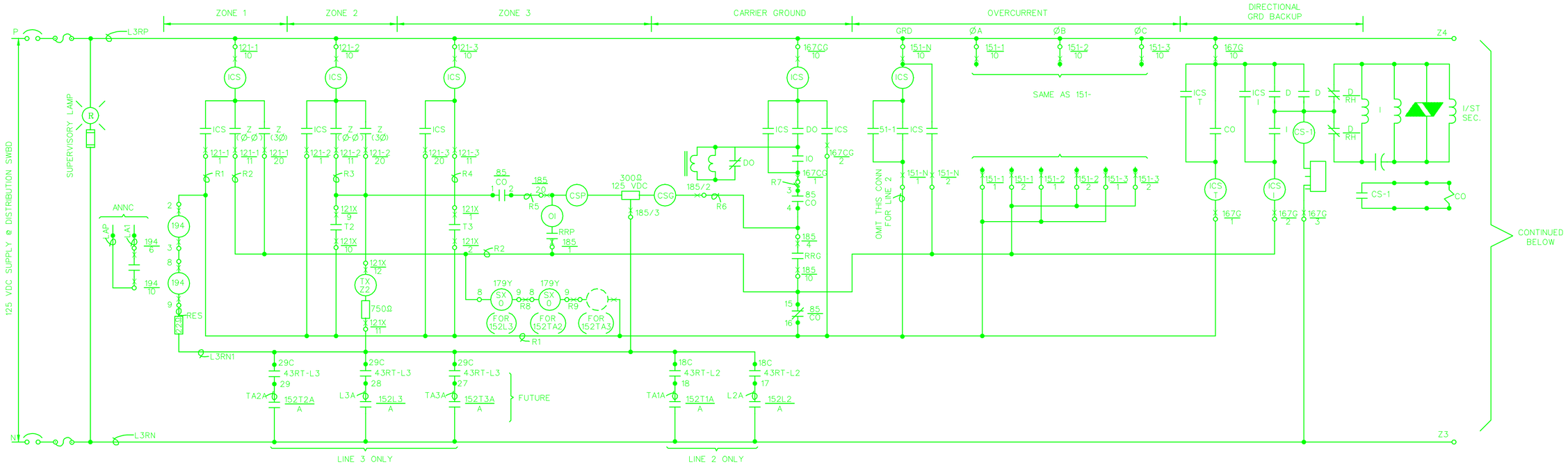

230 KV LINE NO. 3 RELAYS CONTROL CIRCUIT

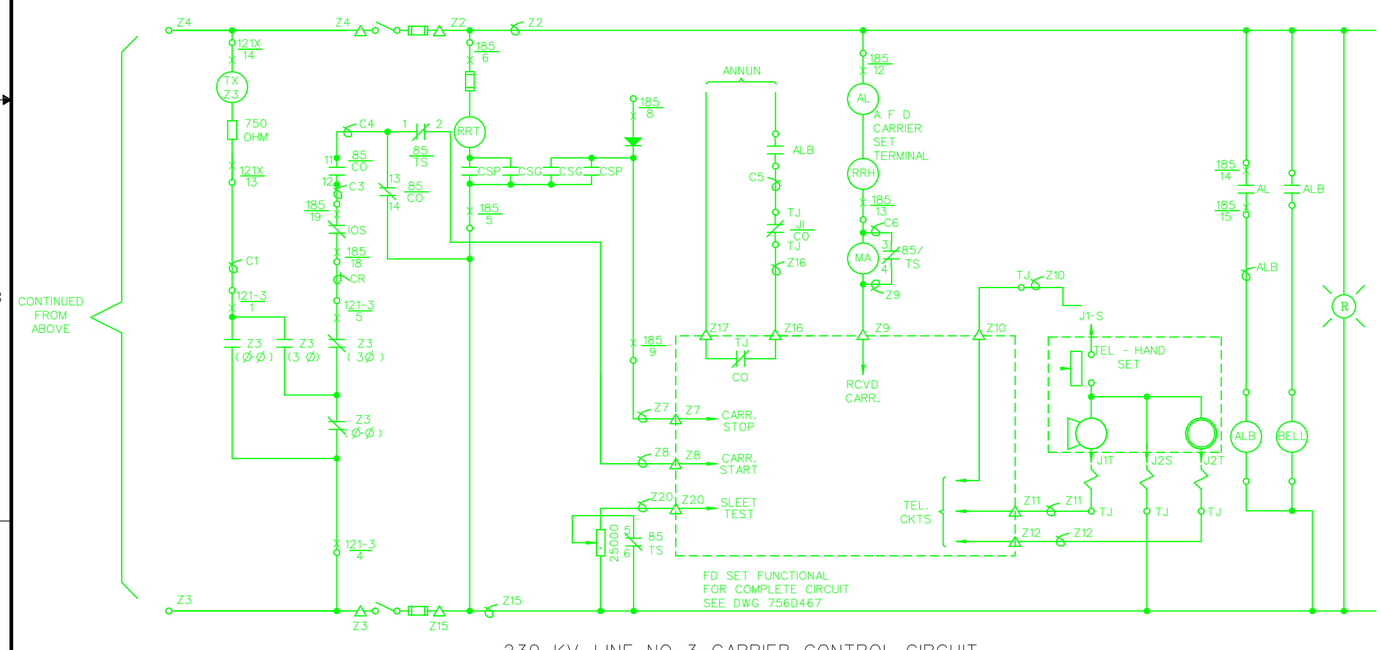

230 KV LINE NO. 3 CARRIER CONTROL CIRCUIT

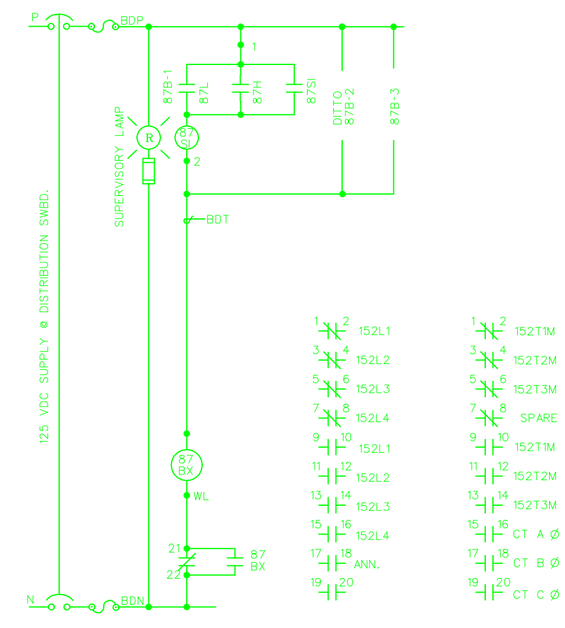

BUS DIFF. RELAYS CONTROL CIRCUIT

	OFF	ON
1-2		X
3-4		X
5-6		X
7-8		X
9-10		X
11-12		X
13-14	X	
15-16	X	

CARRIER C.O. SW 85/CO

	SEND	NOR.	REC	RS
1-2		X	X	X
3-4		X		
5-6	X	X	X	
7-8		X		

CARRIER TEST SW 85/TS

REFERENCE DRAWINGS:

HA5E-009.3 SWITCHYARD SCHEMATIC DIAGRAM
(NO DWG NO.) LCB II AND HCB DC ELEMENTARY

UNIT ELECTRIC CONTROL:
7569C-3 DC ELEMENTARY WIRING DIAGRAM

NOTES:

1. REFER TO LEGEND ON DRAWING G-09.
2. FOR LINES 2 AND 4 REFER TO REFERENCE DRAWINGS.

SYMBOL	ZONE	DESCRIPTION	DATE	BY

REVISIONS

HYDROELECTRIC DESIGN CENTER
PORTLAND, OR

U.S. ARMY ENGINEER DISTRICT
CORPS OF ENGINEERS
SAVANNAH, GEORGIA

HARTWELL MAJOR REHABILITATION - PHASE 2
HARTWELL DAM AND LAKE
SWITCHYARD UPGRADE
LINE & BUS RELAYING
EQUIPMENT REMOVAL
SAVANNAH RIVER GEORGIA AND S. CAROLINA

SIZE	SOLICITATION NO.	FILE NO.	PLATE
F	DACW21-03-B-0007	HAR0157	E-13

SCALE: SHEET 29

13 SEPTEMBER 2002
13-00500

HAP103TB.DGN HAP103E13.DGN

...\Har0157\03B07w\HAP103E13.dgn 03/24/2003 10:50:05 AM

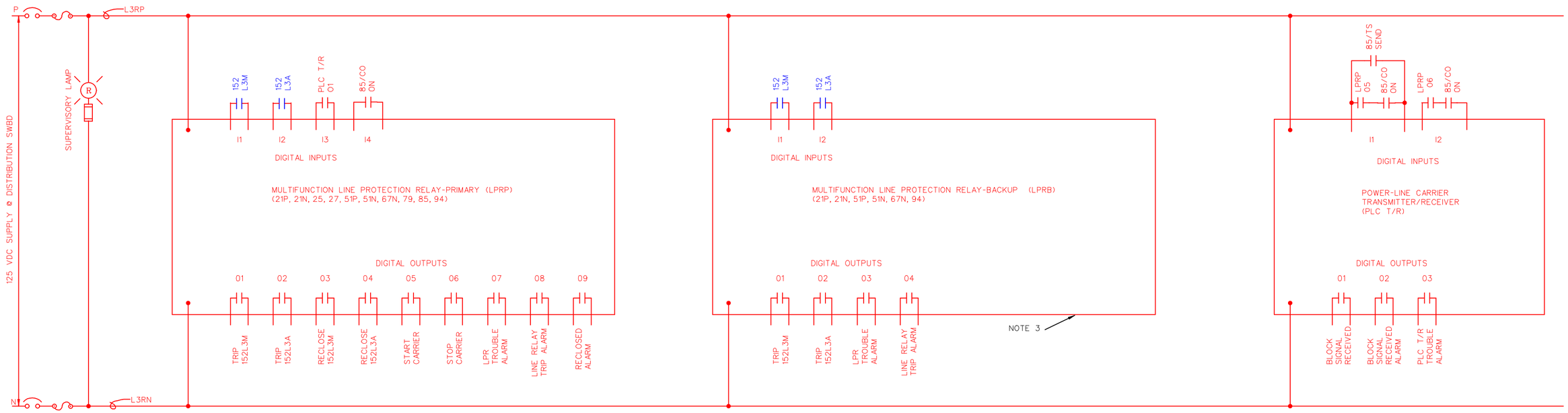

230 KV LINE NO. 3 RELAYS CONTROL CIRCUIT
(SIMILAR FOR LINE 4)

230 KV LINE NO. 3 CARRIER CONTROL CIRCUIT
(SIMILAR FOR LINE 4)

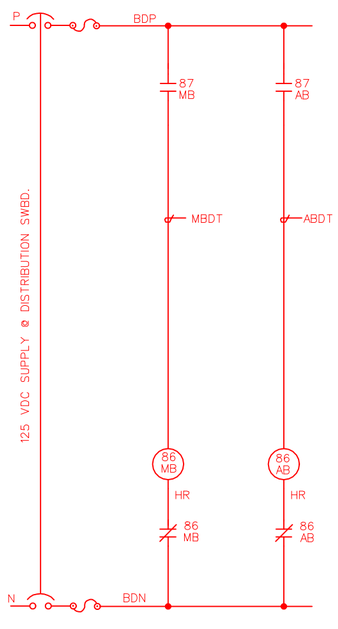

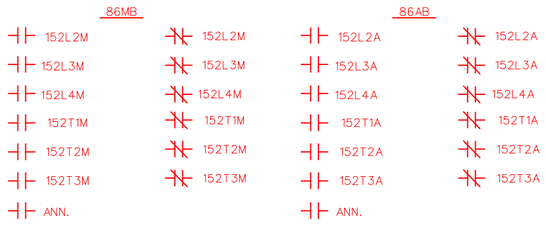

BUS DIFF. RELAYS
CONTROL CIRCUIT

	OFF	ON
1		X
2		X
3		X
4		X

CARRIER C.O. SW
85/CO

	SEND	NOR.
1	X	
2		

CARRIER TEST SW
85/TS

NOTES:

1. REFER TO LEGEND ON DRAWING G-09.
2. FOR LINE 2 REFER TO REFERENCE DRAWINGS.
3. LPRB IS GFE FOR LINE 4.

REFERENCE DRAWINGS:

(NO DWG NO.) LCB II AND HCB DC ELEMENTARY

SYMBOL	ZONE	DESCRIPTION	DATE	BY

REVISIONS

HYDROELECTRIC DESIGN CENTER
PORTLAND, OR

U.S. ARMY ENGINEER DISTRICT
CORPS OF ENGINEERS
SAVANNAH, GEORGIA

HARTWELL MAJOR REHABILITATION - PHASE 2
HARTWELL DAM AND LAKE
SWITCHYARD UPGRADE
LINE & BUS RELAYING
NEW EQUIPMENT
SAVANNAH RIVER GEORGIA AND S. CAROLINA

SIZE	SOLICITATION NO.	FILE NO.	PLATE
F	DACW21-03-B-0007	HAR0157	E-14

SCALE: SHEET 30

HAP103TB.DGN HAP103E14.DGN

23 SEPTEMBER 2002
13:00:00

...\Har0157\03B07w\HAP103E14.dgn 03/24/2003 10:51:01 AM

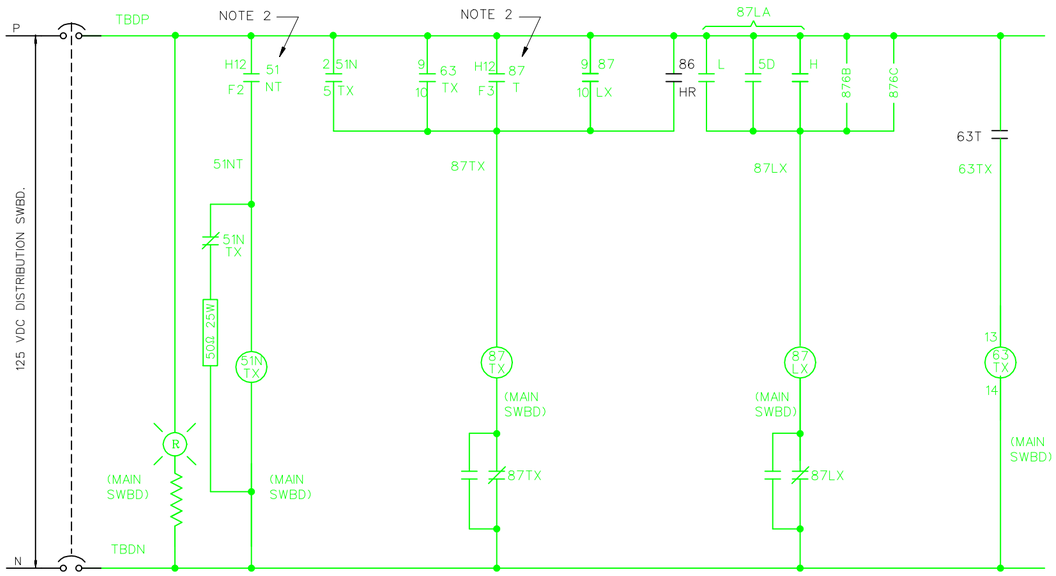

TRANSFORMER AND POWERHOUSE LINE NO. 1 DIFF. RELAYS
(SIM. FOR TRANSFORMER AND POWERHOUSE LINE 2)

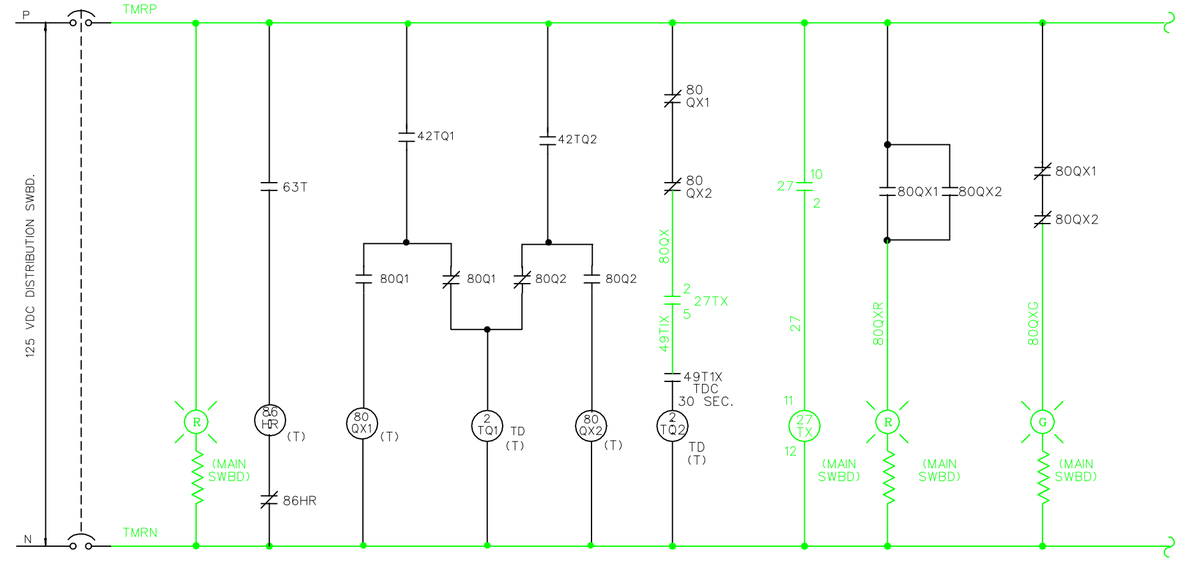

TRANSFORMER NO. 1 MISC. RELAYS
(SIM. FOR TRANSFORMER 2)

51NTX
- 87TX
- ANN
- SP
- 51NTX
- SP
- SP

87TX
- ANN
- 152T1A
- 152T1M
- 5P (UNIT 1)
- 5P (UNIT 2)
- 52A
- 20TW
- SP
- 152T1A
- 152T1M

87LX
- 87TX
- ANN
- CT A φ
- CT B φ
- CT C φ
- SP

63TX
- 87TX
- ANN
- SP
- SP
- SP
- SP

86HR
- 87TX
- ANN
- 86HR

2TQ1
- ANN TDC 15 SEC
- 42TQ2 TDC 15 SEC

2TQ2
- ANN (INST)
- 5P (UNIT 1) TDC 60 MIN
- 5P (UNIT 2) TDC 60 MIN

27TX
- 2TQ2
- SPARE

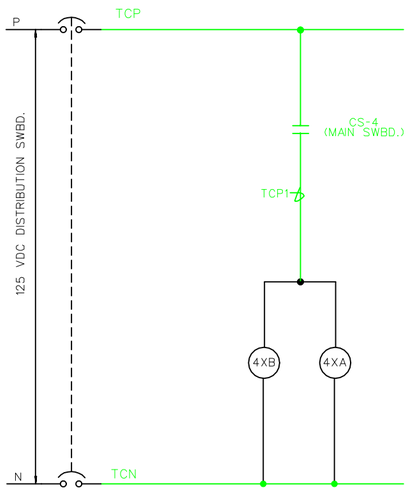

TRANSFORMER NO. 1 CENTRALIZED CONTROL
(SIM. FOR TRANSFORMER 2)

4XB
- SP
- SP

4XA
- 42TQ1
- 42TQ2

	OFF	ON
1-2		X
3-4		X

CS-4
TRANSFORMER AUX. SWITCH

REFERENCE DRAWINGS:

HA5E-007.3 CONTROL SCHEMATICS GENERATING UNITS 1 TO 4 & TRANSFORMERS

NOTES:

1. REFER TO LEGEND ON DRAWING G-09.
2. 87T/51NT RELAY SHALL BE RE-USED. SEE DRAWING E-17.

SYMBOL	ZONE	DESCRIPTION	DATE	BY
		REVISIONS		

HYDROELECTRIC DESIGN CENTER
PORTLAND, OR

U.S. ARMY ENGINEER DISTRICT
CORPS OF ENGINEERS
SAVANNAH, GEORGIA

HARTWELL MAJOR REHABILITATION - PHASE 2
HARTWELL DAM AND LAKE
SWITCHYARD UPGRADE
TRANSFORMER RELAYING, SH. 1
EQUIPMENT REMOVAL
SAVANNAH RIVER GEORGIA AND S. CAROLINA

SIZE	SOLICITATION NO.	FILE NO.	PLATE
F	DACW21-03-B-0007	HAR0157	E-15

SCALE: SHEET 31

3 OCTOBER 2002
15:45:00

HAP103TB.DGN HAP103E15.DGN

...\Har0157\03B07w\HAP103E15.dgn 03/24/2003 10:51:48 AM

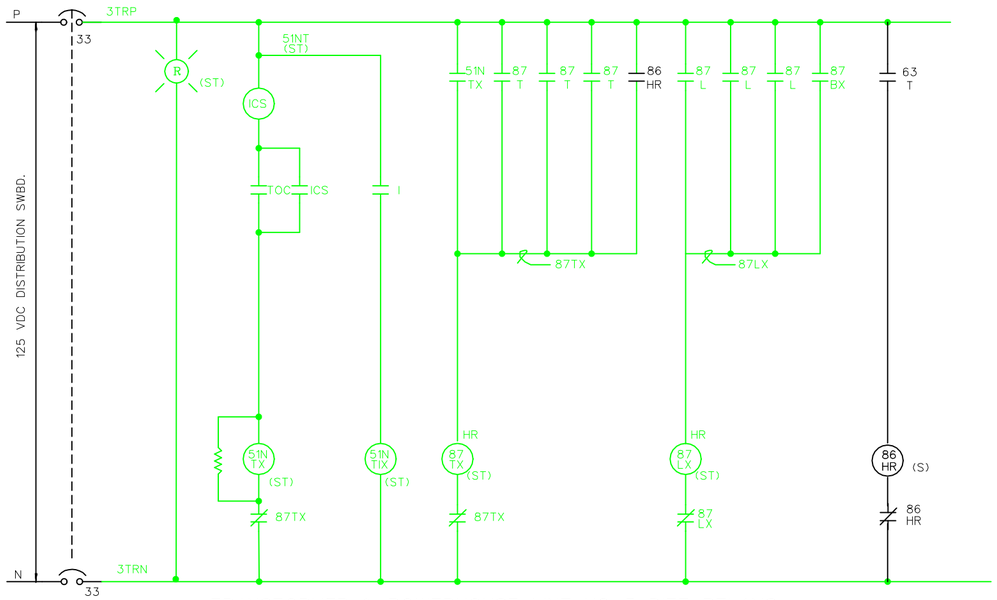

TRANSFORMER & POWERHOUSE LINE NO. 3 DIFF. RELAYS

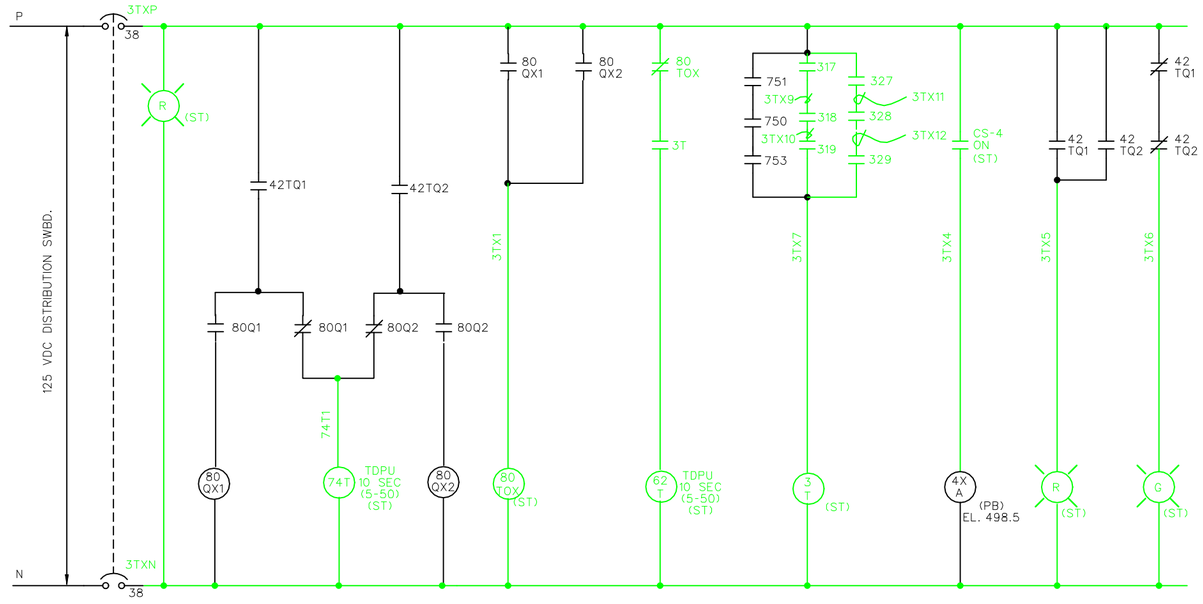

TRANSFORMER NO. 3 MISC. RELAYS

51NTX
- 87TX
- ANN
- SP

51NT1X
- 21G

87TX
- ANN
- 152T3A
- 152T3M
- 52E
- 20TW
- 152T3A
- 152T3M
- 52E
- 65SD
- 51NTX
- 87TX

87LX
- ANN
- 152T3A
- 152T3M
- 52E
- 152T3A
- 152T3M
- 52E
- 65SD
- 87LX

86HR
- 87TX
- ANN
- 86HR

74T
- SP
- SP
- SP
- SP

80TOX
- 152T3A
- 152T3M
- SP
- SP
- 62T
- SP

62T
- ANN
- 5P (UNIT 5)
- SP
- SP

3T
- 62T
- 42TQ1
- SP
- SP

4XA
- 42TQ1
- 42TQ2
- SP
- SP

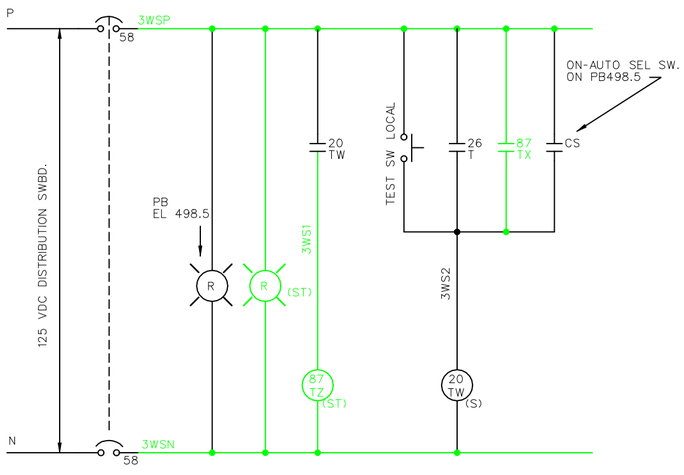

TRANSFORMER NO. 3 WATER SPRAY

87TZ
- ANN
- 42F
- 42TQ1
- 42TQ2

20TW
- 87TZ
- IND. LT.

	OFF	ON
1-2		X
3-4		X

CS-4
TRANSFORMER AUX. SWITCH

NOTE:

1. REFER TO LEGEND ON DRAWING G-09.

REFERENCE DRAWINGS:

HA5E-349 GENERATOR NO. 5 AND TRANSFORMER NO. 3 SCHEMATIC DIAGRAM SHEET 1

WASHINGTON ELECTRIC CONTROLS:

81223-S, SH. 3 GEN. NO. 5 & TRANSF. NO. 3 DC SCHEMATIC-SHEET 1
81223-S, SH. 4 GEN. NO. 5 & TRANSF. NO. 3 DC SCHEMATIC-SHEET 2

SYMBOL	ZONE	DESCRIPTION	DATE	BY

REVISIONS

HYDROELECTRIC DESIGN CENTER
PORTLAND, OR

U.S. ARMY ENGINEER DISTRICT
CORPS OF ENGINEERS
SAVANNAH, GEORGIA

HARTWELL MAJOR REHABILITATION - PHASE 2
HARTWELL DAM AND LAKE
SWITCHYARD UPGRADE
TRANSFORMER RELAYING, SH. 2
EQUIPMENT REMOVAL
SAVANNAH RIVER GEORGIA AND S. CAROLINA

SIZE	SOLICITATION NO.	FILE NO.	PLATE
F	DACW21-03-B-0007	HAR0157	E-16

SCALE: SHEET 32

HAP103TB.DGN HAP103E16.DGN

2 OCTOBER 2002
3:00:00

...\Har0157\03B07w\HAP103E16.dgn 03/24/2003 10:52:40 AM

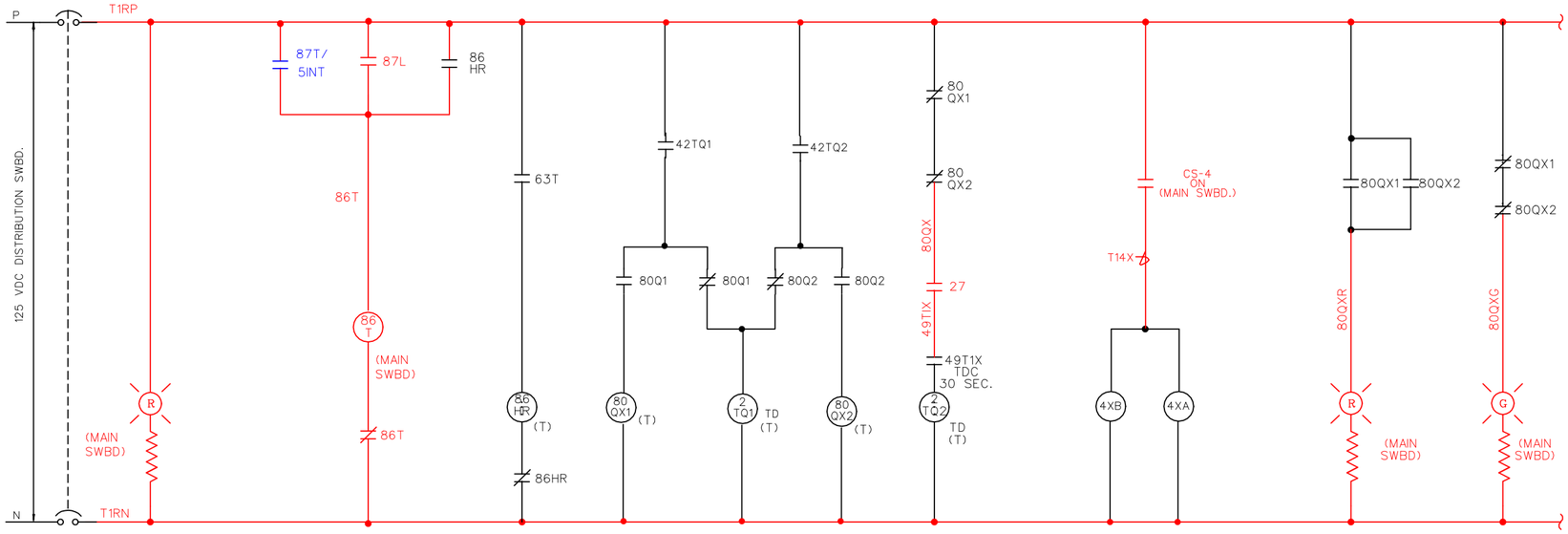

TRANSFORMER NO. 1 RELAYS
(SIM. FOR TRANSFORMER 2)

NOTE 2

87T/51NT
- 86T
- ANN (87T)
- ANN (51NT)

86T
- ANN
- 152T1A
- 152T1M
- 5P (UNIT 1)
- 5P (UNIT 2)
- 52A
- 20TW
- SP
- 152T1A
- 152T1M

86HR
- 86T
- ANN
- 86HR

2TQ1
- ANN
  TDC 15 SEC
- 42TQ2
  TDC 15 SEC

2TQ2
- ANN (INST)
- 5P (UNIT 1)
  TDC 60 MIN
- 5P (UNIT 2)
  TDC 60 MIN

4XB
- SP
- SP

4XA
- 42TQ1
- 42TQ2

	OFF	ON
1		X
2		X

CS-4
TRANSFORMER AUX. SWITCH

NOTES:

1. REFER TO LEGEND ON DRAWING G-09.
2. 87T/51NT RELAY SHALL BE RE-USED. SEE DRAWING E-15.

SYMBOL	ZONE	DESCRIPTION	DATE	BY
		REVISIONS		

HYDROELECTRIC DESIGN CENTER
PORTLAND, OR

U.S. ARMY ENGINEER DISTRICT
CORPS OF ENGINEERS
SAVANNAH, GEORGIA

HARTWELL MAJOR REHABILITATION - PHASE 2
HARTWELL DAM AND LAKE
SWITCHYARD UPGRADE
TRANSFORMER RELAYING, SH. 1
NEW EQUIPMENT
SAVANNAH RIVER GEORGIA AND S. CAROLINA

SIZE	SOLICITATION NO.	FILE NO.	PLATE
F	DACW21-03-B-0007	HAR0157	E-17

SCALE: SHEET 33

1 OCTOBER 2002
15:50:00

HAP103TB.DGN HAP103E17.DGN

...\Har0157\03B07w\HAP103E17.dgn 03/24/2003 10:53:29 AM

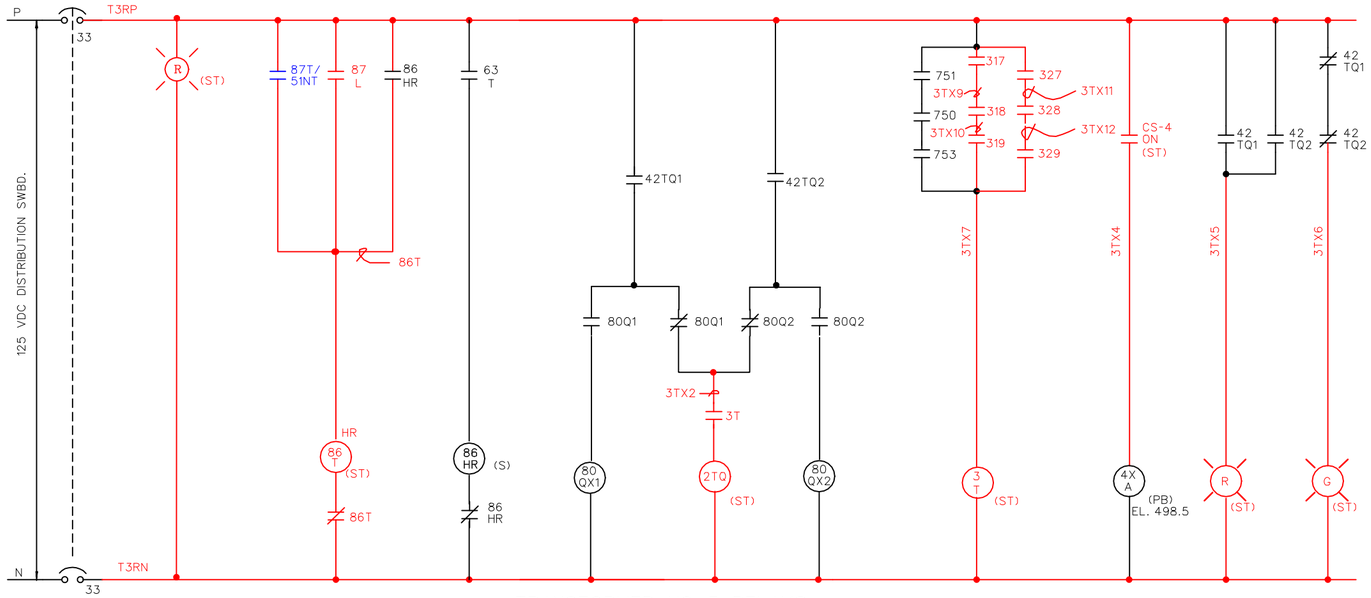

TRANSFORMER NO. 3 RELAYS

87T/51NT
- 86T
- ANN (87T)
- ANN (51NT)
- 21G

86T
- ANN
- 152T3A
- 152T3M
- 52E
- 20TW
- 152T3A
- 152T3M
- 52E
- 65SD
- 86T

86HR
- 86T
- ANN
- 86HR

2TQ
- ANN TDC 10 SEC.
- 5P (UNIT 5) TDC 10 SEC.
- SP
- SP

3T
- 2TQ
- 42TQ1
- SP
- SP

4XA
- 42TQ1
- 42TQ2
- SP
- SP

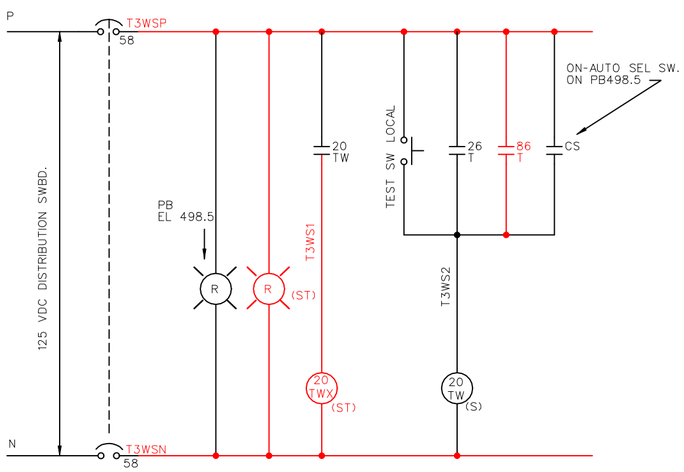

TRANSFORMER NO. 3 WATER SPRAY

20TWX
- ANN
- 42F
- 42TQ1
- 42TQ2

20TW
- 20TWX
- IND. LT.

	OFF	ON
1		X
2		X

CS-4
TRANSFORMER AUX. SWITCH

NOTE:

1. REFER TO LEGEND ON DRAWING G-09.

SYMBOL	ZONE	DESCRIPTION	DATE	BY

REVISIONS

HYDROELECTRIC DESIGN CENTER
PORTLAND, OR

U.S. ARMY ENGINEER DISTRICT
CORPS OF ENGINEERS
SAVANNAH, GEORGIA

HARTWELL MAJOR REHABILITATION - PHASE 2
HARTWELL DAM AND LAKE
SWITCHYARD UPGRADE
TRANSFORMER RELAYING, SH. 2
NEW EQUIPMENT
SAVANNAH RIVER GEORGIA AND S. CAROLINA

SIZE	SOLICITATION NO.	FILE NO.	PLATE
F	DACW21-03-B-0007	HAR0157	E-18

SCALE: SHEET 34

HAP103TB.DGN HAP103E18.DGN

...\Har0157\03B07w\HAP103E18.dgn 03/24/2003 10:54:16 AM

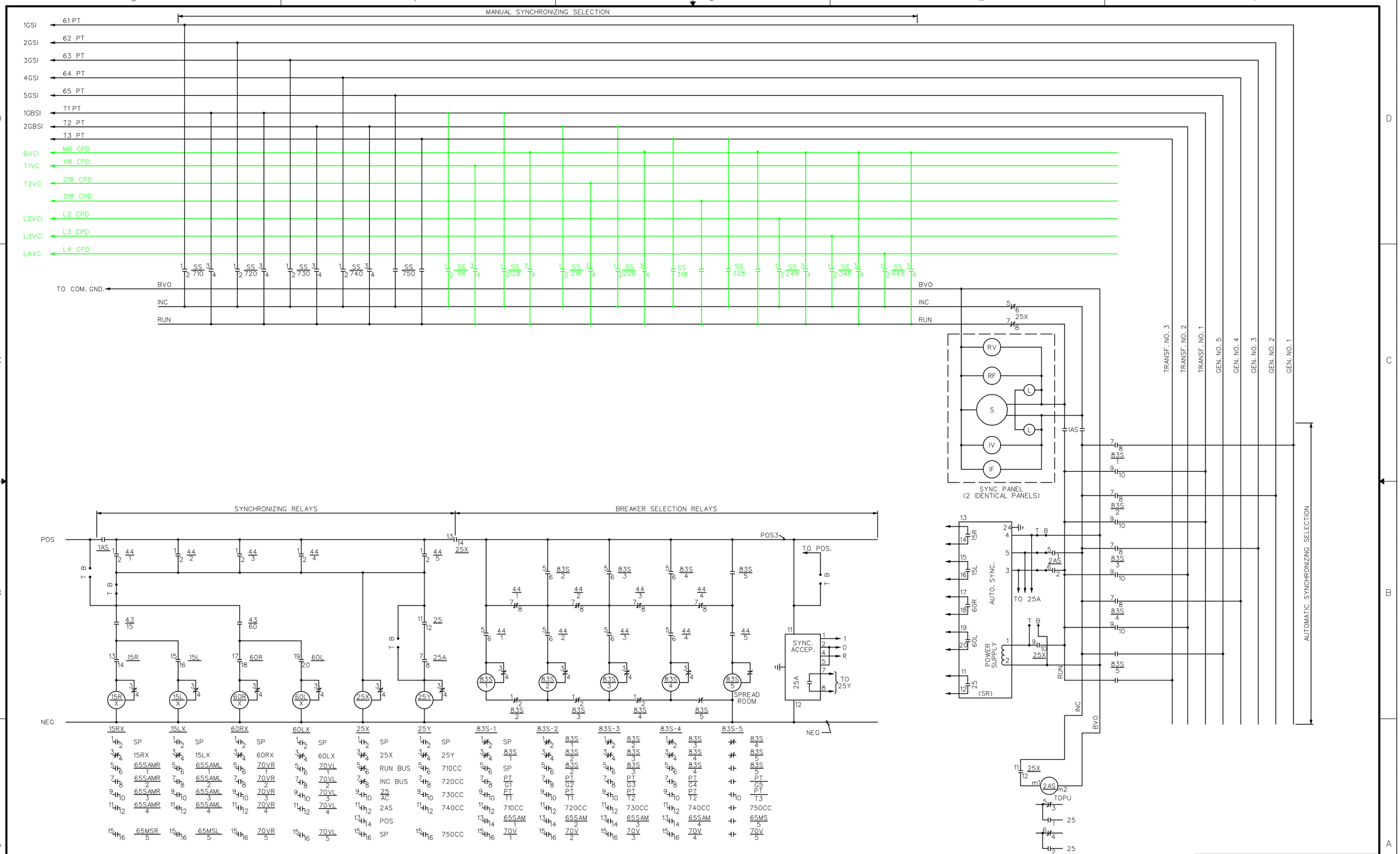

REFERENCE DRAWINGS:
HA5E-352 BREAKER SYNCHRONIZING SCHEMATIC DIAGRAM

SYMBOL	ZONE	DESCRIPTION	DATE	BY

REVISIONS

HYDROELECTRIC DESIGN CENTER
PORTLAND, OR

U.S. ARMY ENGINEER DISTRICT
CORPS OF ENGINEERS
SAVANNAH, GEORGIA

HARTWELL MAJOR REHABILITATION - PHASE 2
HARTWELL DAM AND LAKE
SWITCHYARD UPGRADE

BREAKER SYNCHRONIZING SCHEMATIC
EQUIPMENT REMOVAL

SAVANNAH RIVER GEORGIA AND S. CAROLINA

SIZE	SOLICITATION NO.	FILE NO.	PLATE
F	DACW21-03-B-0007	HAR0157	E-19

SCALE: SHEET 35

03 SEPTEMBER 2002
13:00:00

HAP103TB.DGN HAP103E19.DGN

...\Har0157\03B07w\HAP103E19.dgn 03/24/2003 10:54:45 AM

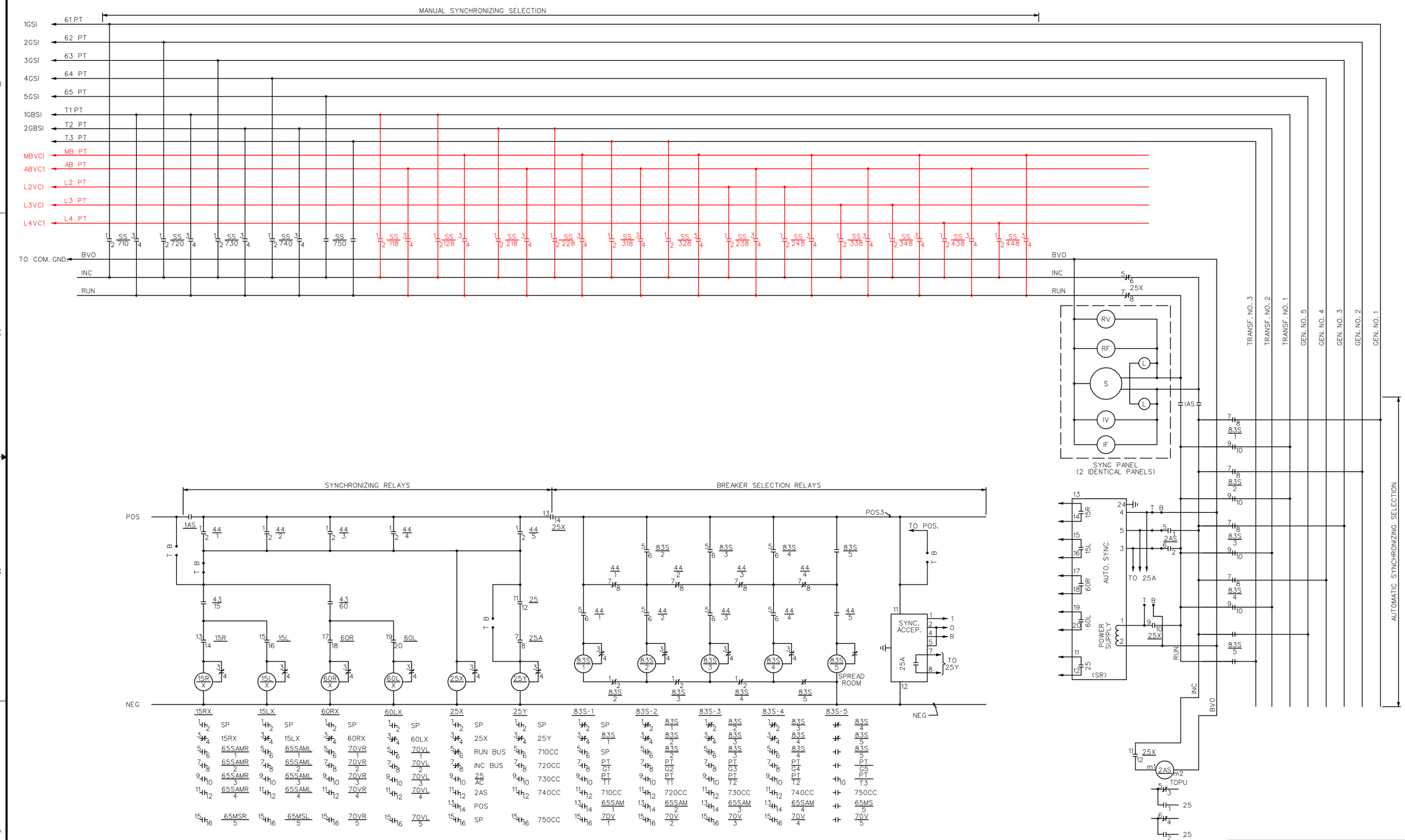

SYMBOL	ZONE	DESCRIPTION	DATE	BY

REVISIONS

HYDROELECTRIC DESIGN CENTER
PORTLAND, OR

U.S. ARMY ENGINEER DISTRICT
CORPS OF ENGINEERS
SAVANNAH, GEORGIA

HARTWELL MAJOR REHABILITATION - PHASE 2
HARTWELL DAM AND LAKE
SWITCHYARD UPGRADE

BREAKER SYNCHRONIZING SCHEMATIC
NEW EQUIPMENT

SAVANNAH RIVER GEORGIA AND S. CAROLINA

SIZE	SOLICITATION NO.	FILE NO.	PLATE
F	DACW21-03-B-0007	HAR0157	E-20

SCALE: SHEET 36

03 SEPTEMBER 2002
13:41:00

HAP103TB.DGN HAP103E20.DGN

...\Har0157\03B07w\HAP103E20.dgn 03/24/2003 10:55:34 AM

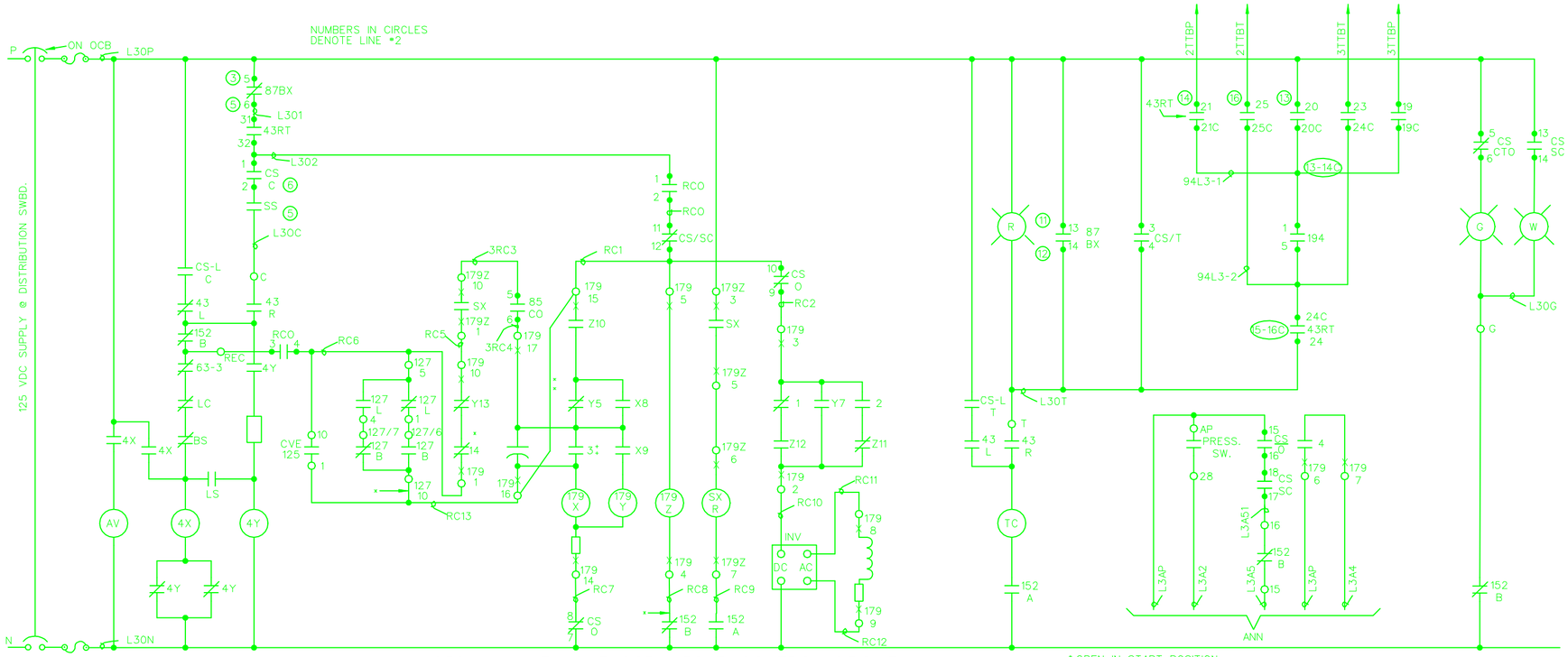

230 KV LINE NO. 3 OCB (152L3) CONTROL CIRCUIT

(SIMILAR FOR LINE NO. 2)

× DISCONNECTED LINE NO. 2 ONLY

×× JUMPER ON LINE NO. 2 ONLY

CONTACTS HANDLE END	POSITIONS (BACK VIEW) 5	4	3	2	1
1				X	X
2	X	X	X	X	X
3				X	X
4	X	X	X	X	X
5				X	X
6	X	X	X	X	X
7		X	X	X	X
8	X	X			X
9		X	X	X	X
10	X	X			X
11		X	X	X	X
12	X	X			X
13	X	X			
14		X	X	X	X
15	X	X			
16		X	X	X	X
17	X	X			
18		X	X	X	X
19					X
20			X		
21	X				
22					
23					X
24			X		
25	X				
26					
27					X
28			X		
29	X				
30					
31			X		
32			X		

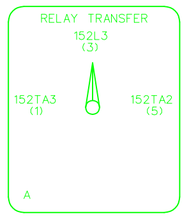

LINE NO. 3
RELAY TRANSFER SW.
43RT-L3

HANDLE REMOVABLE IN
152L3 POS. ONLY

CONTACTS HANDLE END	POSITIONS 5	4	3
1		X	X
2	X	X	X
3		X	X
4	X	X	X
5		X	X
6	X	X	X
7	X	X	X
8		X	X
9	X	X	X
10		X	X
11	X	X	X
12		X	X
13			X
14	X		
15			X
16	X		
17			X
18	X		
19			X
20	X		
21			X
22			X

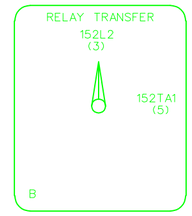

LINE NO. 2
RELAY TRANSFER SW.
43RT-L2

HANDLE REMOVABLE IN
152L2 POS. ONLY

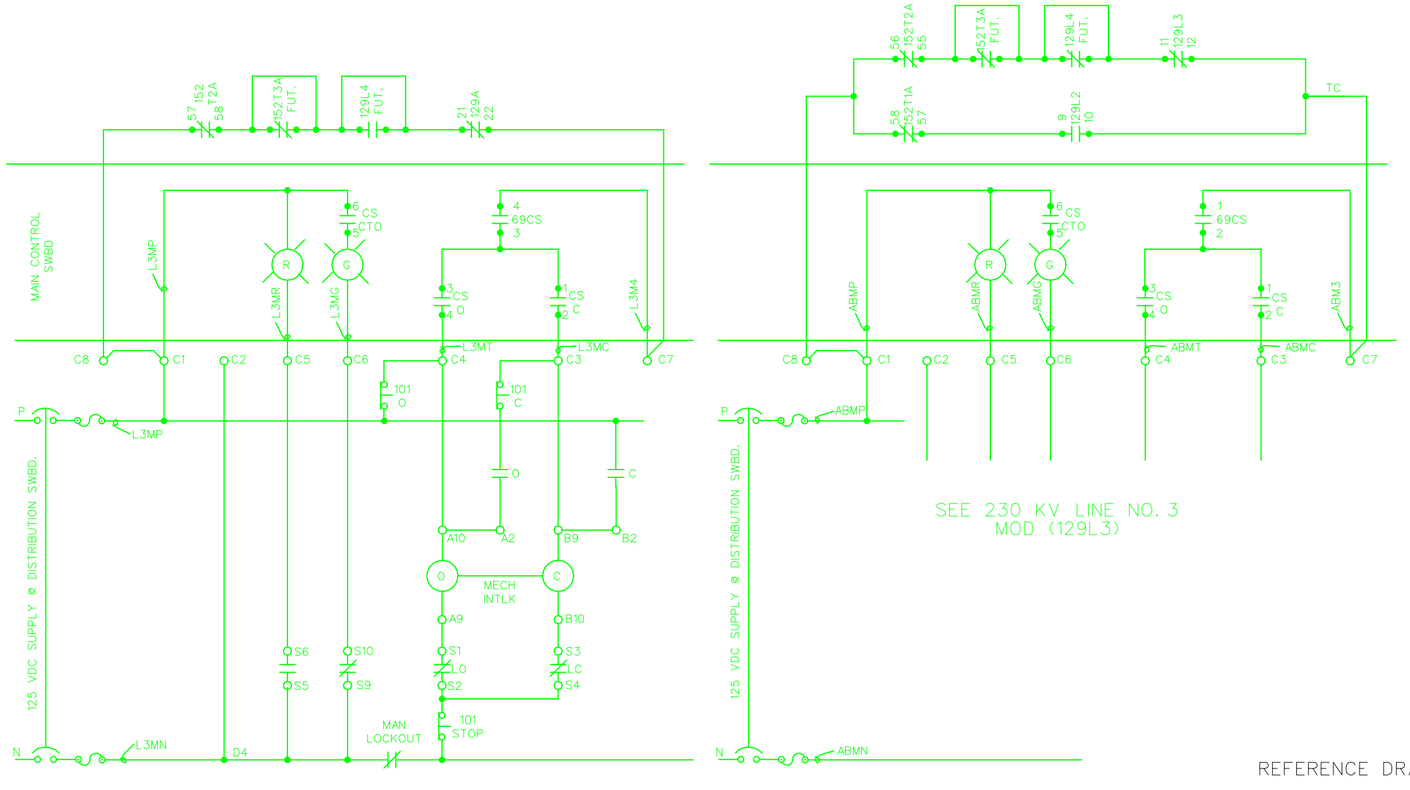

230 KV LINE NO. 3 MOD (129L3)
CONTROL CIRCUIT

(SIMILAR FOR LINE NO. 2)

SEE 230 KV LINE NO. 3
MOD (129L3)

230 KV AUX BUS MOD (129A)
CONTROL CIRCUIT

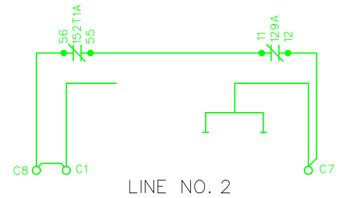

LINE NO. 2

SCHEMATIC OTHERWISE SAME
AS L-3 MOD (129 L3)

	OFF	ON
1-2		X
3-4		X
5-6		X
7-8		X

RECLOSER CUTOUT SW.
RCO SW

	PULL	TRIP	NA T	NA C	CLOSE	
1-2					X	C
3-4	X	X				T
5-6		X	X	X		CTO
7-8			X	X		O
9-10			X	X		O
11-12				X	X	SC
13-14				X	X	SC
15-16			X	X		O
17-18				X	X	SC

CS
152L2, L3, T1A, & T2A

	PULL	TRIP	OFF	CLOSE	
1-2				X	C
3-4	X	X			T
5-6		X	X	X	CTO

CS MOD

	OFF	ON
1-2		X
3-4		X

69CS
MOD PERMISSIVE SW.
(HANDLE REMOVABLE IN
"OFF" POSITION)

NOTES:

1. REFER TO LEGEND ON DRAWING G-09.
2. FOR LINE 4 REFER TO REFERENCE DRAWINGS.

REFERENCE DRAWINGS:

HA5E-009.3 SWITCHYARD SCHEMATIC DIAGRAM

UNIT ELECTRIC CONTROL:
7569C-3 DC ELEMENTARY WIRING DIAGRAM

SYMBOL	ZONE	DESCRIPTION	DATE	BY

REVISIONS

HYDROELECTRIC DESIGN CENTER
PORTLAND, OR

U.S. ARMY ENGINEER DISTRICT
CORPS OF ENGINEERS
SAVANNAH, GEORGIA

HARTWELL MAJOR REHABILITATION - PHASE 2
HARTWELL DAM AND LAKE
SWITCHYARD UPGRADE
BREAKER & MOD SCHEMATICS, SH. 1
EQUIPMENT REMOVAL
SAVANNAH RIVER GEORGIA AND S. CAROLINA

SIZE	SOLICITATION NO.	FILE NO.	PLATE
F	DACW21-03-B-0007	HAR0157	E-21

SCALE: | SHEET 37

13 SEPTEMBER 2002
16-05-00

HAP103TB.DGN HAP103E21.DGN

...\Har0157\03B07w\HAP103E21.dgn 03/24/2003 10:56:10 AM

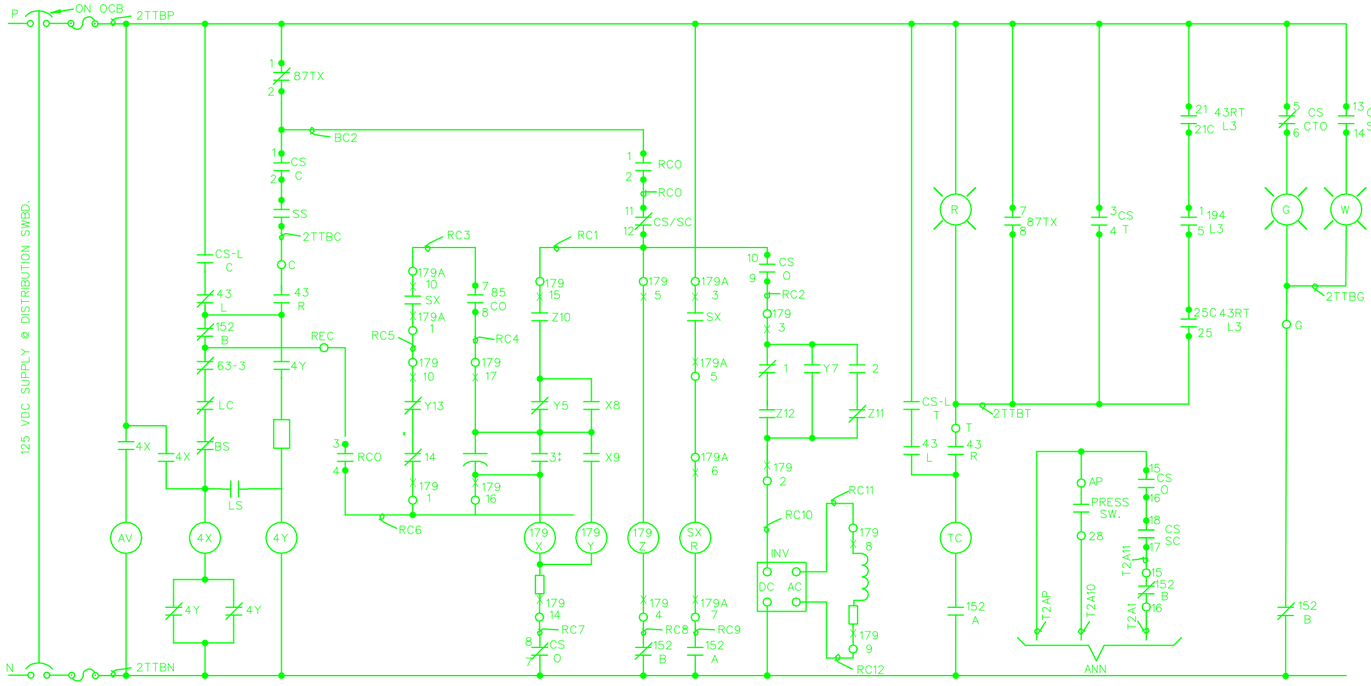

230 KV TRANSFORMER NO. 2 OCB (152T2A)
CONTROL CIRCUIT
(SIMILAR FOR 152T1A)

‡OPEN IN START POSITION
×CLOSED IN START POSITION

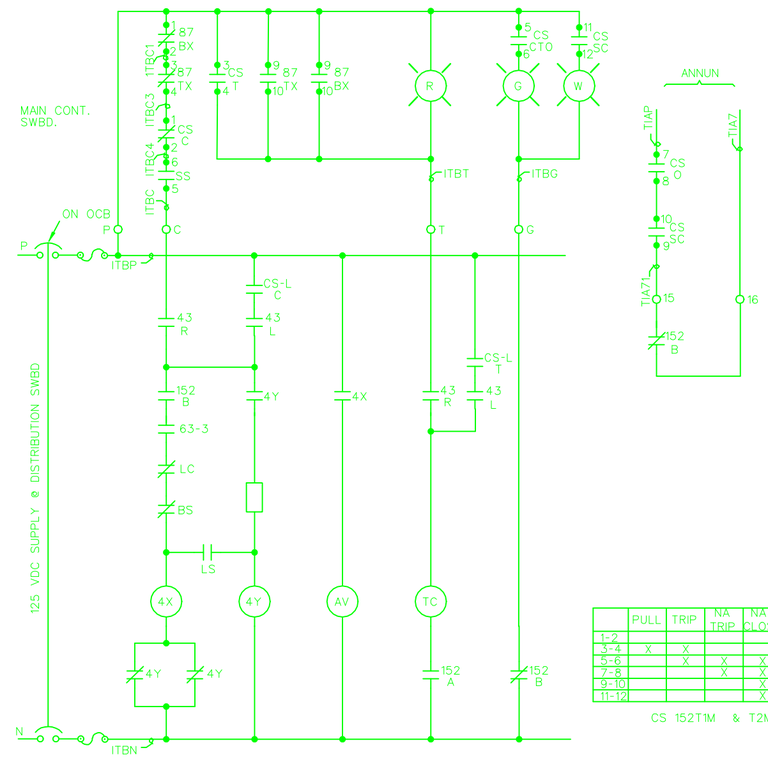

	PULL	TRIP	NA TRIP	NA CLOSE	CLOSE	
1-2					X	C
3-4	X	X				T
5-6		X	X	X	X	CTO
7-8			X	X		O
9-10				X	X	SC
11-12				X	X	SC

CS 152T1M & T2M

230 KV TRANSFORMER NO. 1 OCB (152T1M)
CONTROL CIRCUIT
(SIMILAR FOR 152T2M)

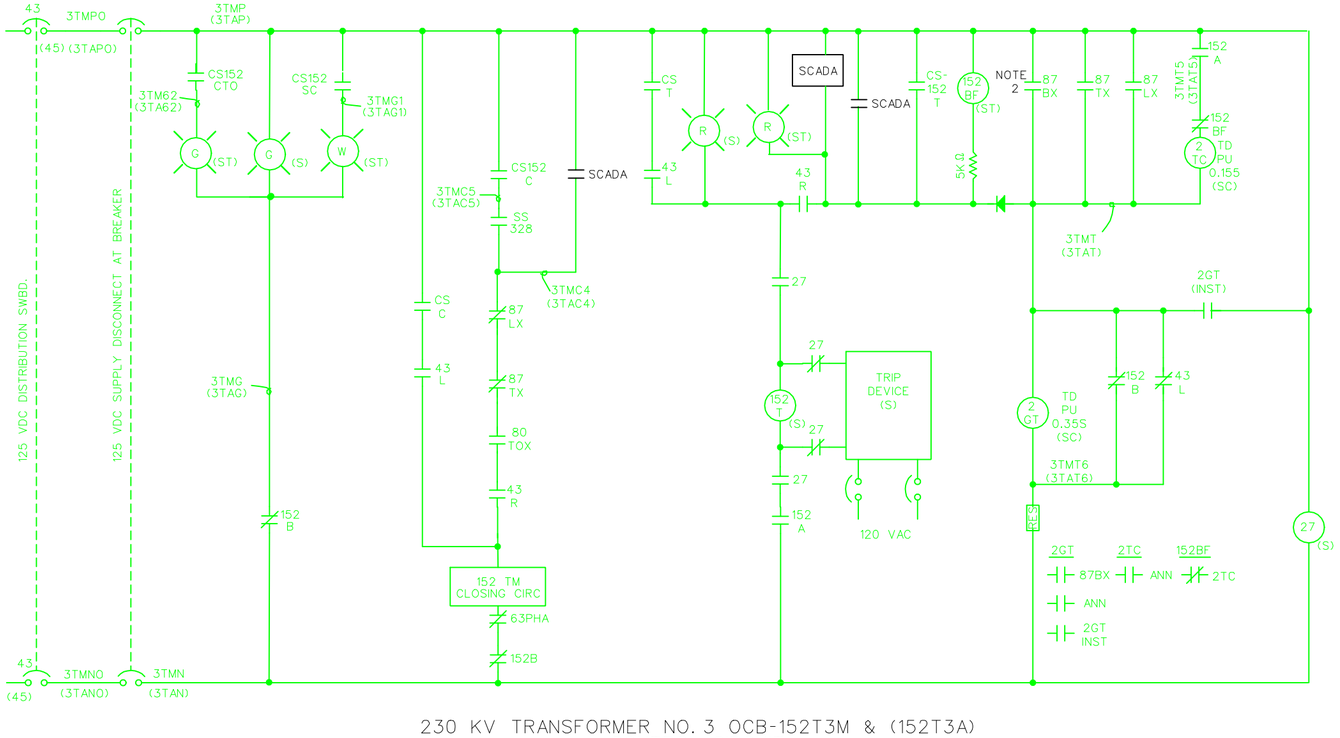

230 KV TRANSFORMER NO. 3 OCB-152T3M & (152T3A)
CONTROL CIRCUIT
(SIMILAR FOR TRANSFORMER NO. 3 OCB 152T3A)

CS-152 TRANSFORMER NO. 3 OCB'S

OFF — TRIP — CLOSE — PULL (F.V.)

BLASCK PISTOL GRIP HANDLE, SPRING RETURN TO OFF

OCB	CONTACT	POSITION PULL	TRIP	OFF AFTER TRIP	OFF AFTER CLOSE	CLOSE	
152T3M(328)	1					X	C
	2	X	X				T
	3		X	X	X	X	CTO
	4			X	X		
	5				X	X	SC
	6				X	X	SC
152T3A(318)	7					X	C
	8	X	X				T
	9		X	X	X	X	CTO
	10			X	X		
	11				X	X	SC
	12				X	X	SC

152A
- TRIP
- REG
- SCADA
- 3T
- MOD 100 (318 ONLY)
- MOD 337
- MOD 437

152B
- 52BX
- IND. LT.
- REG. (52E)
- ANN.
- REG.
- SCADA
- 2TC
- CLOSE
- 2GT

NOTES:

1. REFER TO LEGEND ON DRAWING G-09.
2. CONTACT FOR 152TM3 ONLY.

REFERENCE DRAWINGS:

HA5E-009.3 SWITCHYARD SCHEMATIC DIAGRAM
HA5E-349 GENERATOR NO. 5 AND TRANSFORMER NO. 3 SCHEMATIC DIAGRAM SHEET 1

SYMBOL	ZONE	DESCRIPTION	DATE	BY

REVISIONS

HYDROELECTRIC DESIGN CENTER
PORTLAND, OR

U.S. ARMY ENGINEER DISTRICT
CORPS OF ENGINEERS
SAVANNAH, GEORGIA

HARTWELL MAJOR REHABILITATION - PHASE 2
HARTWELL DAM AND LAKE
SWITCHYARD UPGRADE
BREAKER & MOD SCHEMATICS, SH. 2
EQUIPMENT REMOVAL
SAVANNAH RIVER GEORGIA AND S. CAROLINA

SIZE	SOLICITATION NO.	FILE NO.	PLATE
F	DACW21-03-B-0007	HAR0157	E-22

SCALE: SHEET 38

24 SEPTEMBER 2002
9:00

HAP103TB.DGN HAP103E22.DGN

...\Har0157\03B07w\HAP103E22.dgn 03/24/2003 10:57:00 AM

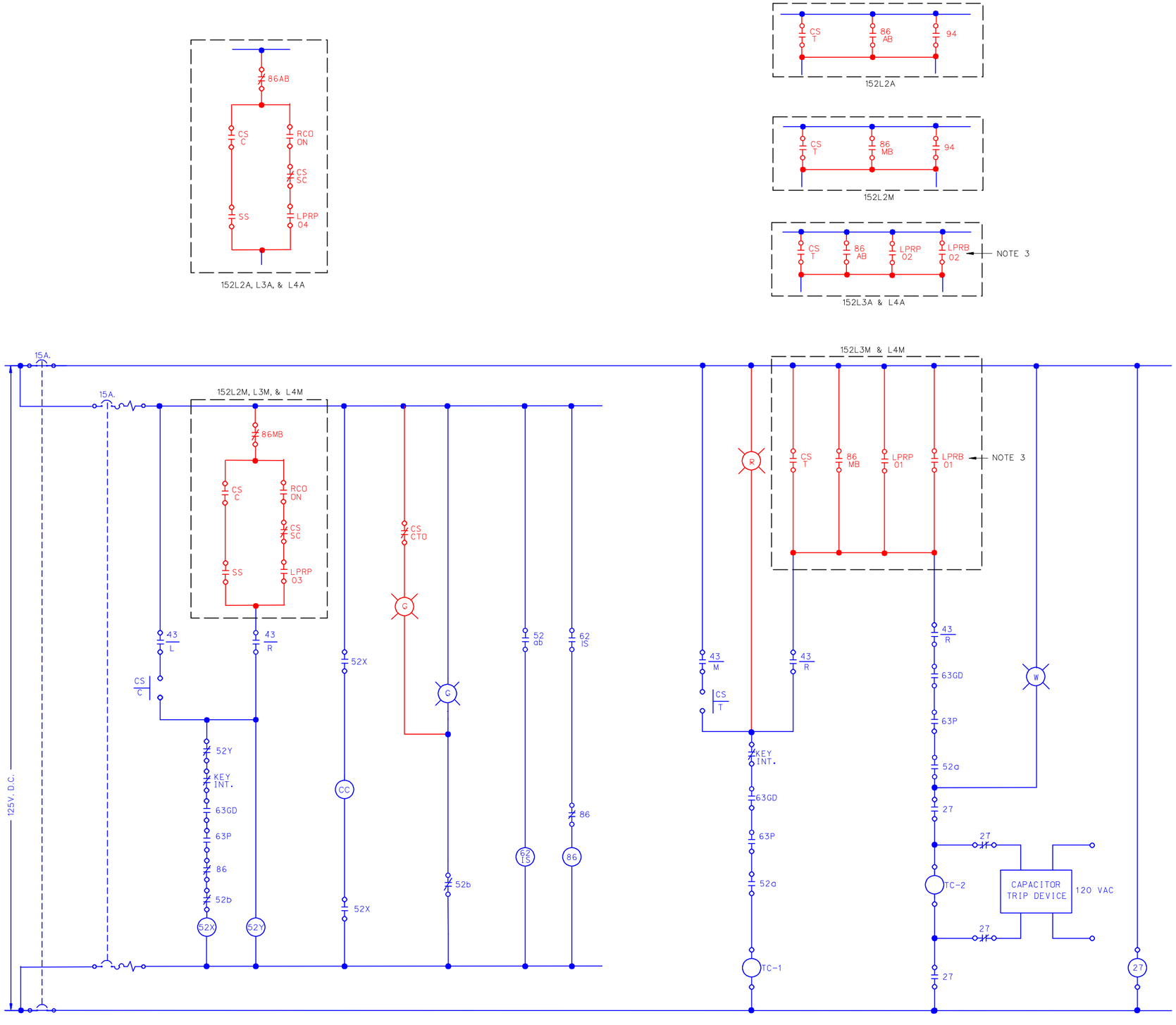

	OFF	ON
1		X
2		X
3		X
4		X

RECLOSER CUTOUT SW.
RCO SW

	PULL	TRIP	NA T	NA C	CLOSE	
1					X	C
2	X	X				T
3		X	X	X	X	CTO
4			X	X		O
5				X	X	SC
6				X	X	SC

CS
152L2A, L2M, L3A, L3M, L4A, & L4M

NOTES:

1. REFER TO LEGEND ON DRAWING G-09.
2. THE REQUIRED SF6 BREAKER INTERFACE IS PROVIDED ON THIS DRAWING. HOWEVER, THE BREAKER CONTROL SCHEMATIC SHOWN IS GENERIC AND VENDOR WILL PROVIDE THEIR STANDARD CONTROL DESIGN.
3. LPRB IS GFE FOR LINE 4.

230 KV LINE NO. 3 GCB (152L3M) CONTROL CIRCUIT

(SIM. FOR 152L2A, L2M, L3A, L4A, & L4M EXCEPT AS INDICATED)

SYMBOL	ZONE	DESCRIPTION	DATE	BY

REVISIONS

HYDROELECTRIC DESIGN CENTER
PORTLAND, OR

U.S. ARMY ENGINEER DISTRICT
CORPS OF ENGINEERS
SAVANNAH, GEORGIA

HARTWELL MAJOR REHABILITATION - PHASE 2
HARTWELL DAM AND LAKE
SWITCHYARD UPGRADE
BREAKER CONTROL SCHEMATICS, SH.1
NEW EQUIPMENT
SAVANNAH RIVER GEORGIA AND S. CAROLINA

SIZE	SOLICITATION NO.	FILE NO.	PLATE
F	DACW21-03-B-0007	HAR0157	E-23

SCALE: SHEET 39

13 SEPTEMBER 2002
5:50:06

HAP103TB.DGN HAP103E23.DGN

...\Har0157\03B07w\HAP103E23.dgn 03/24/2003 10:57:54 AM

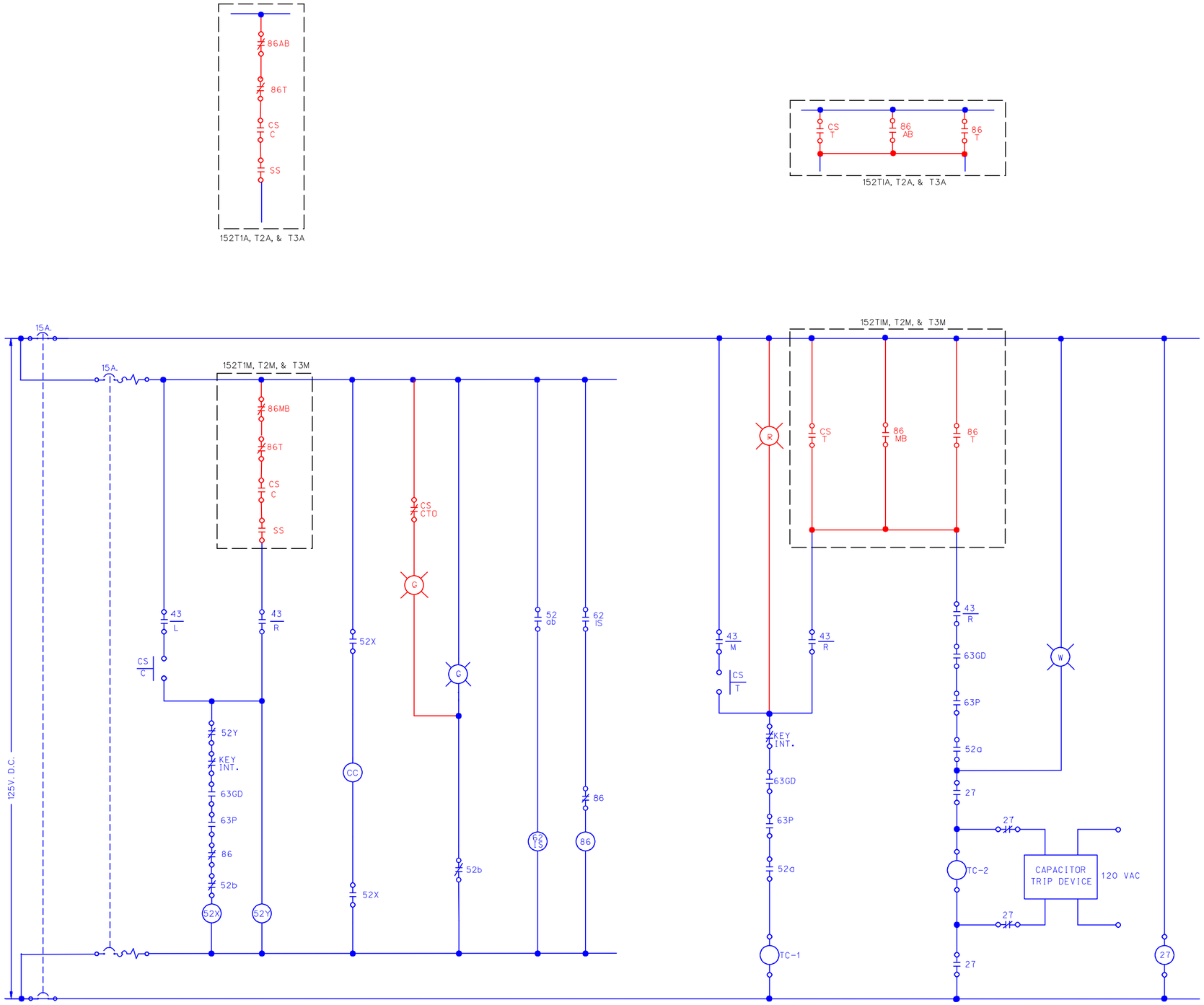

	PULL	TRIP	NA TRIP	NA CLOSE	CLOSE	
1					X	C
2	X	X				T
3		X	X	X	X	CTO
4			X	X		O
5				X	X	SC
6				X	X	SC

CS 152T1A, T1M, T2A, T2M, T3A, & T3M

NOTES:

1. REFER TO LEGEND ON DRAWING G-09.
2. THE REQUIRED SF6 BREAKER INTERFACE IS PROVIDED ON THIS DRAWING. HOWEVER, THE BREAKER CONTROL SCHEMATIC SHOWN IS GENERIC AND VENDOR WILL PROVIDE THEIR STANDARD CONTROL DESIGN.

230 KV TRANSFORMER NO. 3 GCB (152T3M) CONTROL CIRCUIT

(SIM. FOR 152T1A, TIM, T2A, T2M, & T3A EXCEPT AS INDICATED)

SYMBOL	ZONE	DESCRIPTION	DATE	BY
		REVISIONS		

HYDROELECTRIC DESIGN CENTER
PORTLAND, OR

U.S. ARMY ENGINEER DISTRICT
CORPS OF ENGINEERS
SAVANNAH, GEORGIA

HARTWELL MAJOR REHABILITATION - PHASE 2
HARTWELL DAM AND LAKE
SWITCHYARD UPGRADE
BREAKER CONTROL SCHEMATICS, SH.2
NEW EQUIPMENT
SAVANNAH RIVER GEORGIA AND S. CAROLINA

SIZE	SOLICITATION NO.	FILE NO.	PLATE
F	DACW21-03-B-0007	HAR0157	E-24

SCALE: | SHEET 40

12-SEPTEMBER-2002
9:06AM

HAP103TB.DGN HAP103E24.DGN

...\Har0157\03B07w\HAP103E24.dgn 03/24/2003 10:58:41 AM

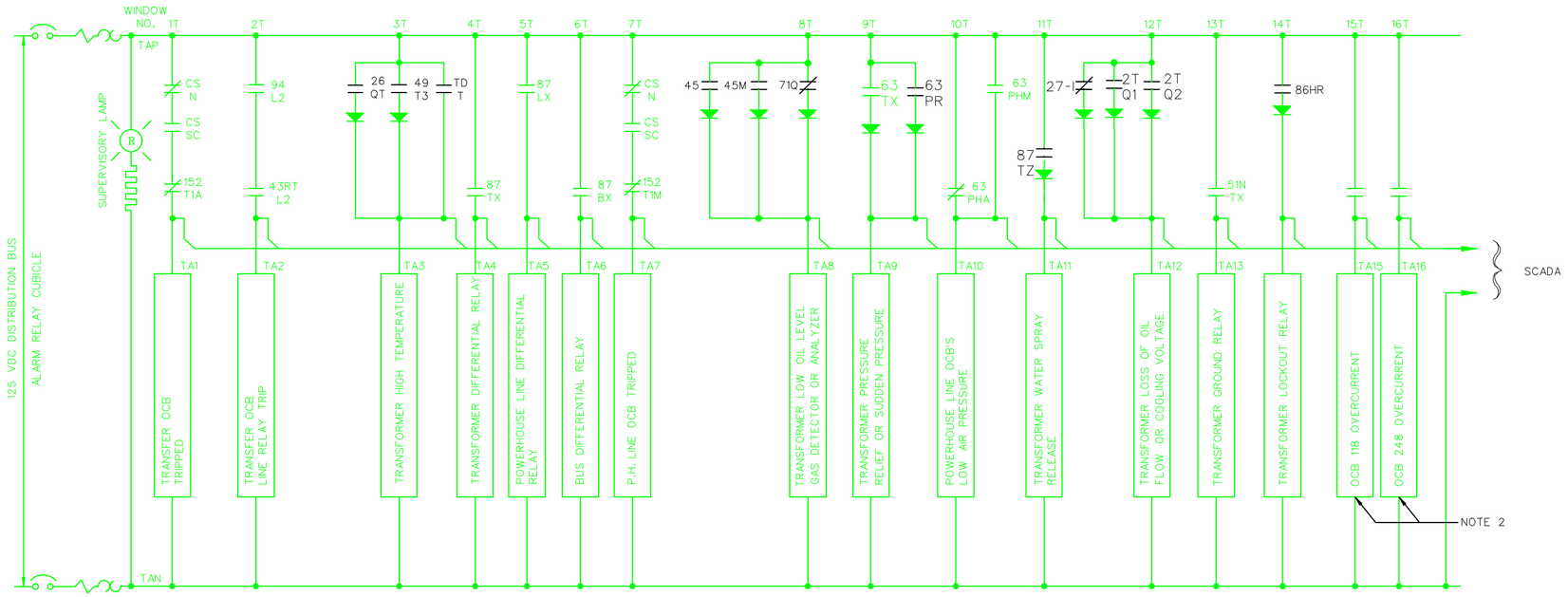

TRANSFORMER NO. 1 ANNUNCIATOR

CONTROL ROOM
(SIMILAR FOR NO. 2)

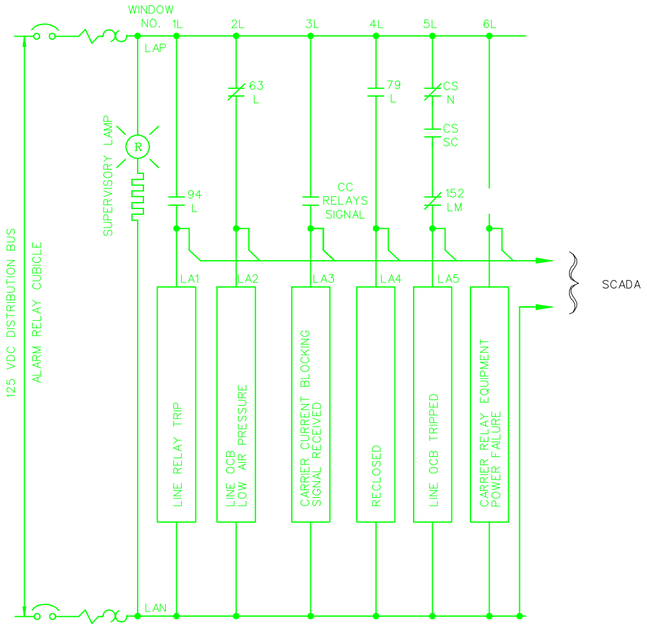

LINE ANNUNCIATOR

CONTROL ROOM
(TYPICAL)

1T	2T	3T	4T
5T	6T	7T	8T
9T	10T	11T	12T
13T	14T	15T	16T

TRANSFORMER
WINDOW ARRANGEMENT

1L	2L	3L
4L	5L	6L

LINE
WINDOW ARRANGEMENT

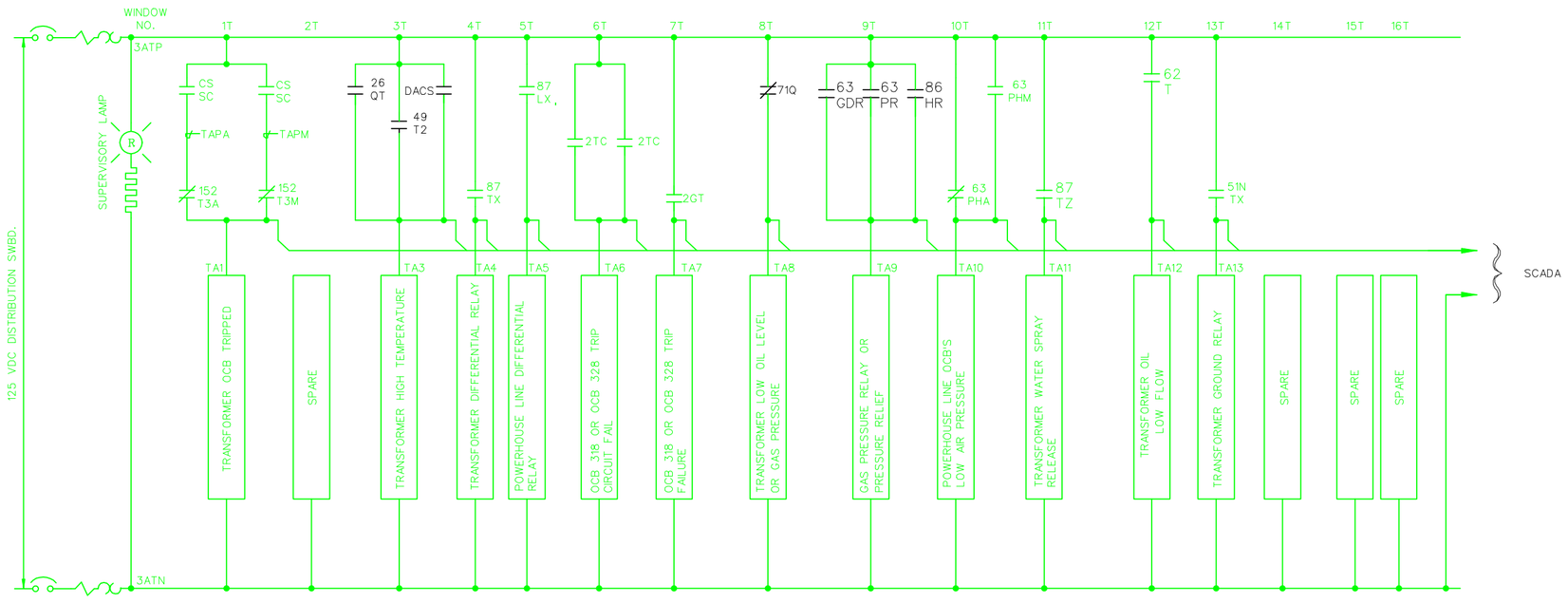

TRANSFORMER NO. 3 ANNUNCIATOR

CONTROL ROOM

NOTES:

1. REFER TO LEGEND ON DRAWING G-09.
2. WINDOWS 15T AND 16T, TRANSFORMER NO. 1 ONLY

REFERENCE DRAWINGS:

HA5E-017.2 ANNUNCIATOR SCHEMATIC DIAGRAM
HA5E-356 ANNUNCIATOR SCHEMATIC DIAGRAM, UNITS 1-4
HA5E-357 ANNUNCIATOR SCHEMATIC DIAGRAM, UNIT 5

SYMBOL	ZONE	DESCRIPTION	DATE	BY

REVISIONS

HYDROELECTRIC DESIGN CENTER
PORTLAND, OR

U.S. ARMY ENGINEER DISTRICT
CORPS OF ENGINEERS
SAVANNAH, GEORGIA

HARTWELL MAJOR REHABILITATION - PHASE 2
HARTWELL DAM AND LAKE
SWITCHYARD UPGRADE
ANNUNCIATOR SCHEDULE
EQUIPMENT REMOVAL
SAVANNAH RIVER GEORGIA AND S. CAROLINA

SIZE	SOLICITATION NO.	FILE NO.	PLATE
F	DACW21-03-B-0007	HAR0157	E-25

SCALE: SHEET 41

18 DECEMBER 2002
09:00:00

HAP103TB.DGN HAP103E25.DGN

...\Har0157\03B07w\HAP103E25.dgn 03/24/2003 10:59:49 AM

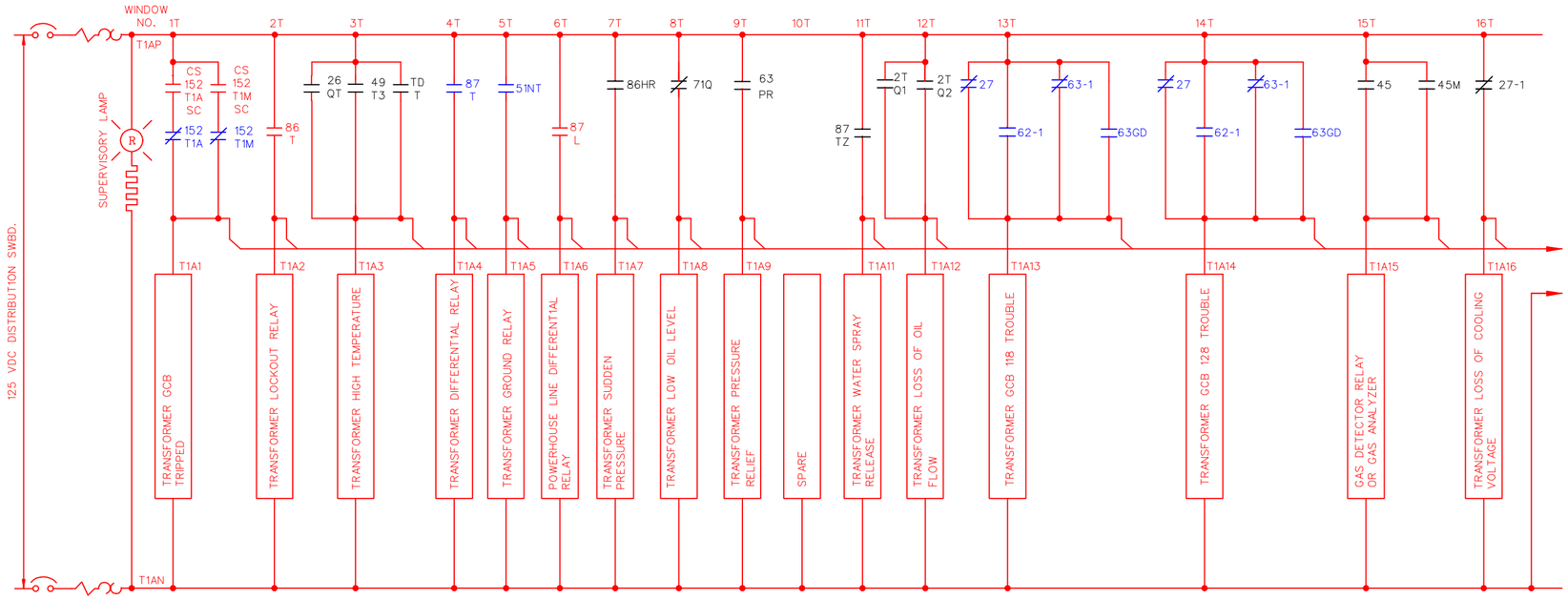

TRANSFORMER NO. 1 ANNUNCIATOR

CONTROL ROOM
(SIMILAR FOR TRANSFORMERS 2 & 3 EXCEPT AS INDICATED)

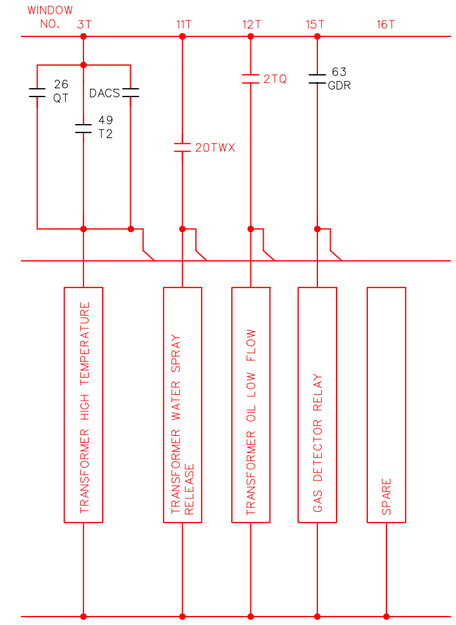

TRANSFORMER NO. 3 ANNUNCIATOR

1T	2T	3T	4T	5T
6T	7T	8T	9T	10T
11T	12T	13T	14T	15T
16T	17T	18T	19T	20T

TRANSFORMER
WINDOW ARRANGEMENT

1L	2L	3L	4L
5L	6L	7L	8L
9L	10L	11L	12L

LINE
WINDOW ARRANGEMENT

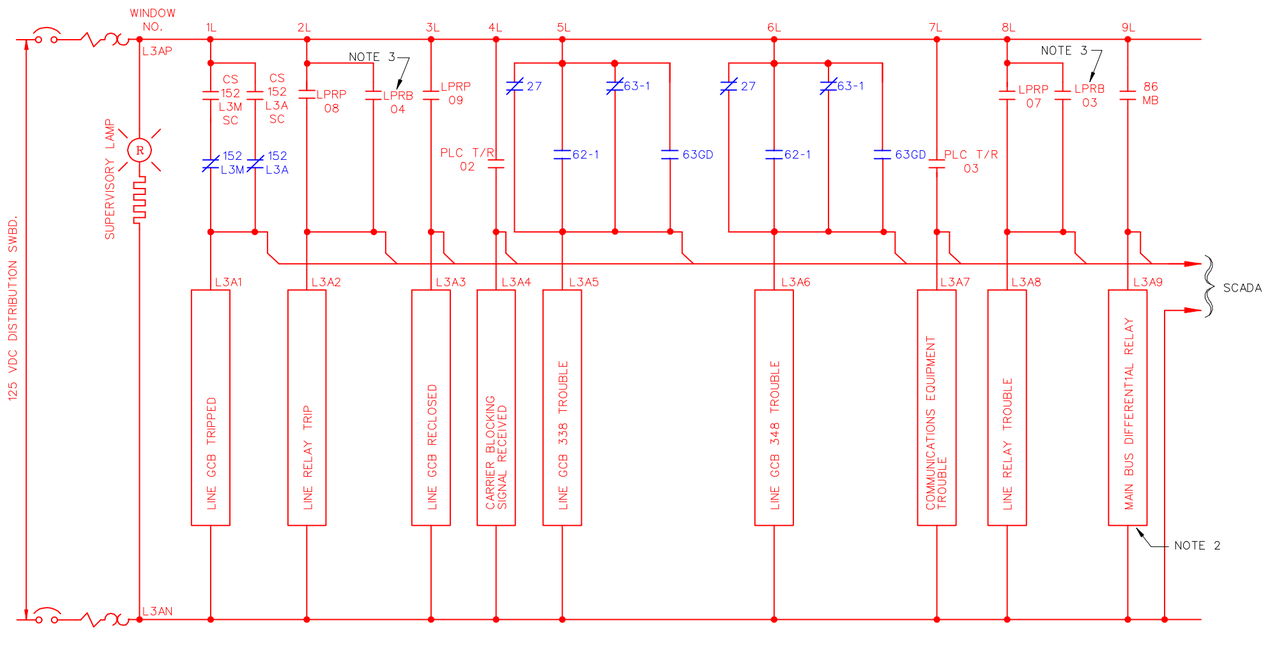

LINE NO. 3 ANNUNCIATOR

CONTROL ROOM
(SIMILAR FOR LINES 2 & 4 EXCEPT AS INDICATED)

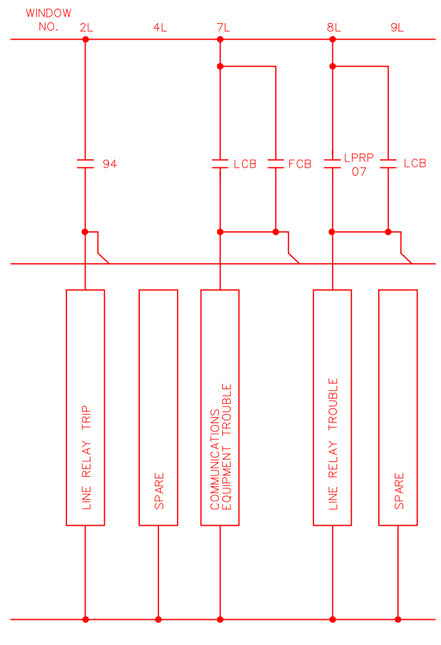

LINE NO. 2 ANNUNCIATOR

NOTES:

1. REFER TO LEGEND ON DRAWING G-09.
2. WINDOW 8L IS "AUX. BUS DIFFERENTIAL RELAY" AND RELAY IS 86AB FOR LINE 4.
3. LPRB IS GFE FOR LINE 4.
4. ANNUNCIATORS SHALL INTERFACE WITH EXISTING AUDIBLE ALARM CIRCUITS. REFER TO REFERENCE DRAWINGS.

REFERENCE DRAWINGS:

HA5E-017.2 ANNUNCIATOR SCHEMATIC DIAGRAM

SYMBOL	ZONE	DESCRIPTION	DATE	BY
		REVISIONS		

HYDROELECTRIC DESIGN CENTER
PORTLAND, OR

U.S. ARMY ENGINEER DISTRICT
CORPS OF ENGINEERS
SAVANNAH, GEORGIA

HARTWELL MAJOR REHABILITATION - PHASE 2
HARTWELL DAM AND LAKE
SWITCHYARD UPGRADE
ANNUNCIATOR SCHEDULE
NEW EQUIPMENT
SAVANNAH RIVER GEORGIA AND S. CAROLINA

SIZE	SOLICITATION NO.	FILE NO.	PLATE
F	DACW21-03-B-0007	HAR0157	E-26

SCALE: SHEET 42

HAP103TB.DGN HAP103E26DGN

3 OCTOBER 2002
04-00-00

...\Har0157\03B07w\HAP103E26.dgn 03/24/2003 11:00:52 AM