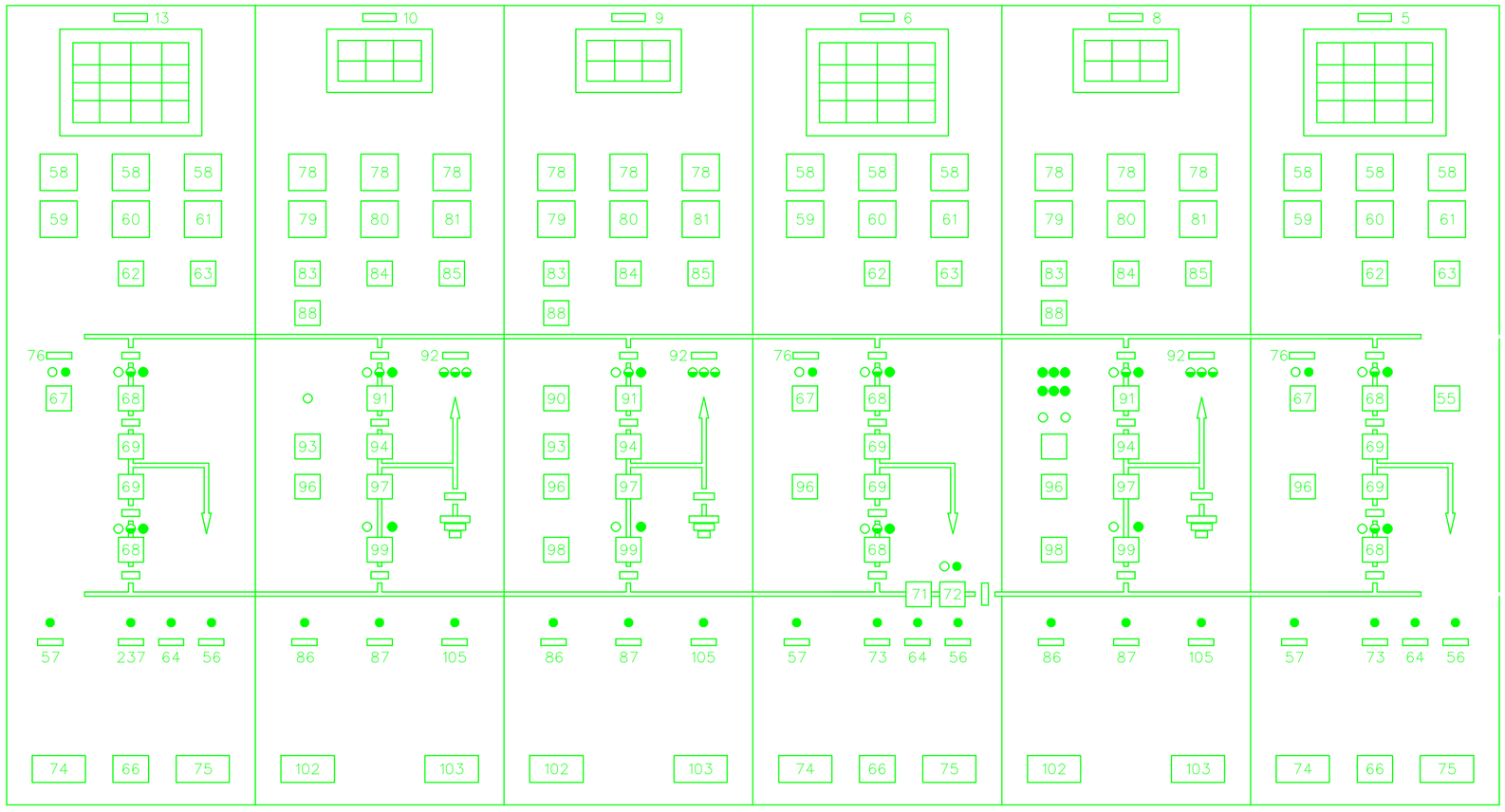

PANEL NO. 1F
TRANSFORMER NO. 3

PANEL NO. 2F
LINE NO. 4

PANEL NO. 3F
LINE NO. 3

PANEL NO. 4F
TRANSFORMER NO. 2 AND
BUS SECTIONALIZING SW.

PANEL NO. 5F
LINE NO. 2

PANEL NO. 6F
TRANSFORMER NO. 1

MAIN CONTROL AND INSTRUMENT PANELS

SCALE: NTS

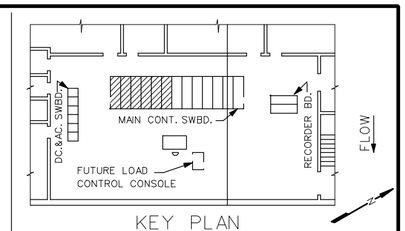

KEY PLAN
CONTROL ROOM EL.512.58

EQUIPMENT AND NAMEPLATE SCHEDULE
CONTROL AND INSTRUMENT PANELS

	PNL. NO.	EQUIPMENT	NAMEPLATE
PANEL NAMEPLATES	1	NAMEPLATE	GENERATOR NO. 1
	2	NAMEPLATE	GENERATOR NO. 2
	3	NAMEPLATE	GENERATOR NO. 3
	4	NAMEPLATE	GENERATOR NO. 4
	5	NAMEPLATE	TRANSFORMER NO. 1
	6	NAMEPLATE	TRANSFORMER NO. 2
	7		
	8	NAMEPLATE	LINE NO. 2
	9	NAMEPLATE	LINE NO. 3
	10	NAMEPLATE	LINE NO. 4
	11	NAMEPLATE	STATION SERVICE NOS. 1 & 2
	12	NAMEPLATE	STATION SERVICE & OSCILLOGRAPH
	13	NAMEPLATE	TRANSFORMER NO. 3
	14	NAMEPLATE	GENERATOR NO. 5
TRANS. PANELS	55	CONTROL SWITCH	43MCH
	56	SUPERVISORY LAMP	ANNUNCIATOR DC CONTROL
	57	SUPERVISORY LAMP	TRANS. WATER SPRAY DC CONT.
	58	AMMETER	NONE
	59	WATTMETER	NONE
	60	VOLTMETER	NONE
	61	VARMETER	NONE
	62	VOLTMETER SWITCH	NONE
	63	TEST AND RESET SWITCH	ANNUNCIATOR
	64	SUPERVISORY LAMP	TRANS. AND PH LINE RELAYS
	65		
	66	TEST BLOCK	TRANSFORMER NEUTRAL CURRENT
	67	CONTROL SWITCH	TRANSFORMER AUXILIARIES
	68	CONTROL SWITCH	230KV OCB
	69	SYNCHRONIZING SW.	SYNCHROSCOPE
	70	SUPERVISORY LAMP	230KV BUS DIFF. DC. CONT. *
	71	PERMISSIVE SW.	230KV AUX. BUS MOD INTLK.
	72	CONTROL SW.	230KV AUX. BUS MOD
	73	SUPERVISORY LAMP	TRANS. THRM. & MISC. RELAYS DC CONT.
	74	TEST BLOCK-CURRENT	NONE
	75	TEST BLOCK-POTENTIAL	NONE
	76	SUPERVISORY LAMPS	TRANSFORMER OIL
	77		
LINE PANELS	78	AMMETER	NONE
	79	WATTMETER	NONE
	80	VOLTMETER	NONE
	81	VARMETER	NONE
	82		
	83	MILLIAMMETER	NONE
	84	VOLTMETER SW.	NONE
	85	TEST & RESET SW.	ANNUNCIATOR
	86	SUPERVISORY LAMP	CARRIER CUR. DC CONT.
	87	SUPERVISORY LAMP	LINE RELAYS DC CONT.
	88	TELEPHONE JACK	CARRIER CURRENT
	89		
	90	TEST SW.	CARRIER CURRENT
	91	CONTROL SW.	230KV OCB
	92	SUPERVISORY LAMPS	LINE POTENTIAL
	93	CUTOUT SW.	CARRIER CURRENT
	94	SYNCHRONIZING SW.	SYNCHROSCOPE
	95		
	96	CUTOUT SW.	RECLOSING RELAY
	97	PERMISSIVE SW.	MOD INTERLOCK
	98	CONTROL SW.	RELAY TRANSFER
	99	CONTROL SW.	LINE MOD
	100		
	101		
	102	TEST BLOCK-CURRENT	NONE
	103	TEST BLOCK-POTENTIAL	NONE
	104		
	105	SUPERVISORY LAMP	ANNUNCIATOR DC CONTROL
	234		
	235		
	236		
	237	SUPERVISORY LAMP	TRANS. NO. 3 MISC. RELAYS DC CONT.

* PANEL 10F

REFERENCE DRAWINGS

HA5E-366 MAIN CONTROL SWITCHBOARD

SYMBOL	ZONE	DESCRIPTION	DATE	BY

REVISIONS

HYDROELECTRIC DESIGN CENTER
PORTLAND, OR

U.S. ARMY ENGINEER DISTRICT
CORPS OF ENGINEERS
SAVANNAH, GEORGIA

HARTWELL MAJOR REHABILITATION - PHASE 2
HARTWELL DAM AND LAKE
SWITCHYARD UPGRADE
MAIN CONTROL BOARD
EQUIPMENT REMOVAL
SAVANNAH RIVER GEORGIA AND S. CAROLINA

SIZE	SOLICITATION NO.	FILE NO.	PLATE
F	DACW21-03-B-0007	HAR0157	E-27

SCALE: SHEET 43

HAP103TB.DGN HAP103E27.DGN

...\Har0157\03B07w\HAP103E27.dgn 03/24/2003 11:01:32 AM

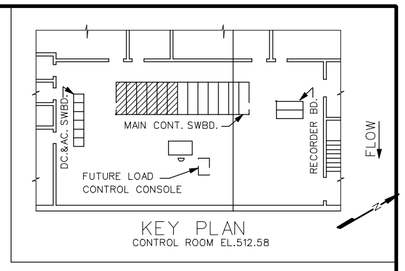

KEY PLAN
CONTROL ROOM EL.512.58

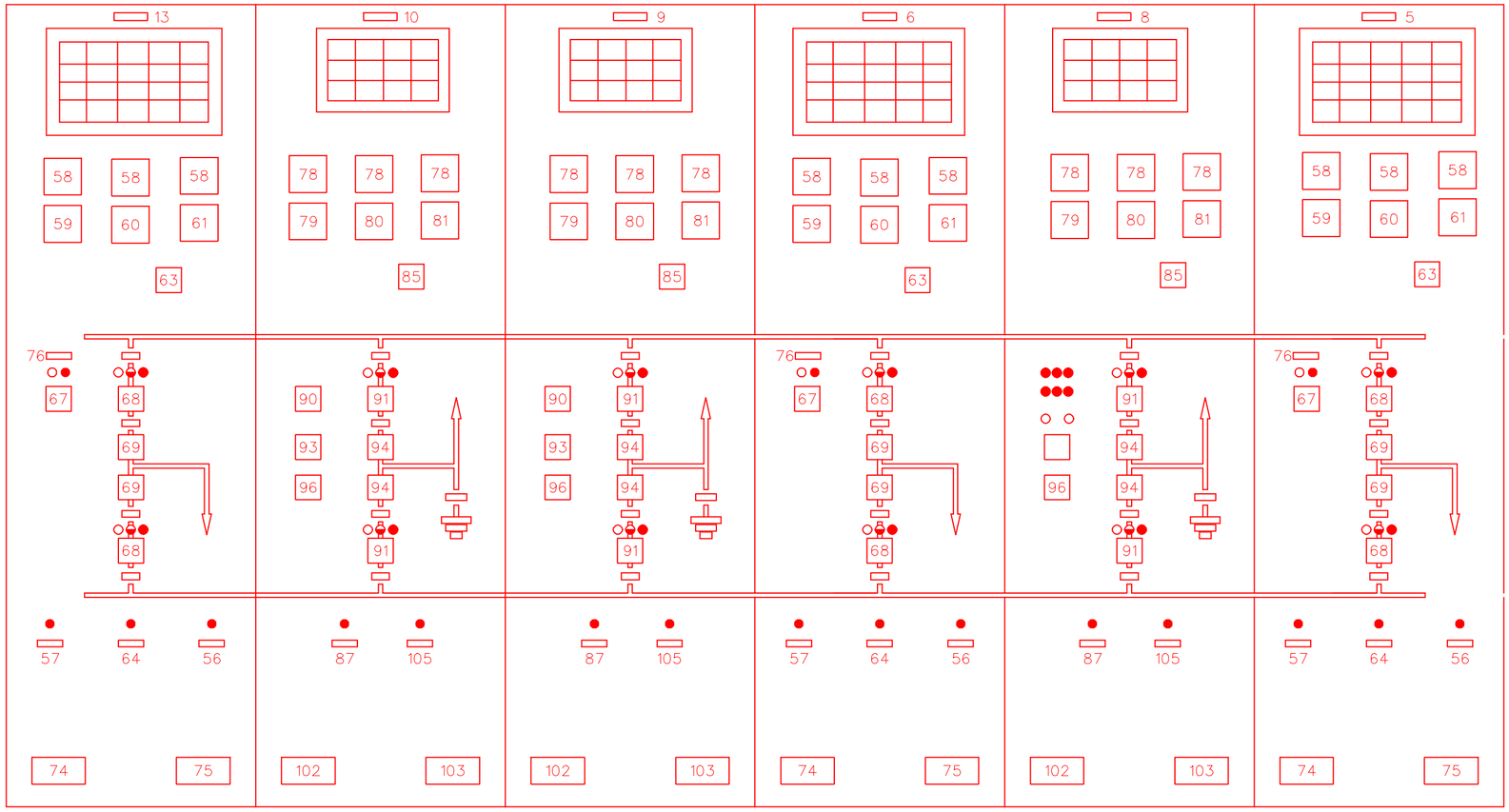

PANEL NO. 1F
TRANSFORMER NO. 3

PANEL NO. 2F
LINE NO. 4

PANEL NO. 3F
LINE NO. 3

PANEL NO. 4F
TRANSFORMER NO. 2

PANEL NO. 5F
LINE NO. 2

PANEL NO. 6F
TRANSFORMER NO. 1

MAIN CONTROL AND INSTRUMENT PANELS
SCALE: NTS

EQUIPMENT AND NAMEPLATE SCHEDULE
CONTROL AND INSTRUMENT PANELS

PNL.	NO.	EQUIPMENT	NAMEPLATE
PANEL NAMEPLATES	1	NAMEPLATE	GENERATOR NO. 1
	2	NAMEPLATE	GENERATOR NO. 2
	3	NAMEPLATE	GENERATOR NO. 3
	4	NAMEPLATE	GENERATOR NO. 4
	5	NAMEPLATE	TRANSFORMER NO. 1
	6	NAMEPLATE	TRANSFORMER NO. 2
	7		
	8	NAMEPLATE	LINE NO. 2
	9	NAMEPLATE	LINE NO. 3
	10	NAMEPLATE	LINE NO. 4
	11	NAMEPLATE	STATION SERVICE NOS. 1 & 2
	12	NAMEPLATE	STATION SERVICE & OSCILLOGRAPH
	13	NAMEPLATE	TRANSFORMER NO. 3
	14	NAMEPLATE	GENERATOR NO. 5
TRANS. PANELS	55		
	56	SUPERVISORY LAMP	ANNUNCIATOR DC CONTROL
	57	SUPERVISORY LAMP	TRANS. WATER SPRAY DC CONT.
	58	AMMETER	NONE
	59	WATTMETER	NONE
	60	VOLTMETER	NONE
	61	VARMETER	NONE
	62		
	63	TEST AND RESET SWITCH	ANNUNCIATOR
	64	SUPERVISORY LAMP	TRANS. RELAYS DC CONT.
	65		
	66		
	67	CONTROL SWITCH	TRANSFORMER AUXILIARIES
	68	CONTROL SWITCH	230KV GCB
	69	SYNCHRONIZING SW.	SYNCHROSCOPE
	70		
	71		
	72		
	73		
	74	TEST BLOCK-CURRENT	NONE
	75	TEST BLOCK-POTENTIAL	NONE
	76	SUPERVISORY LAMPS	TRANSFORMER OIL
	77		
LINE PANELS	78	AMMETER	NONE
	79	WATTMETER	NONE
	80	VOLTMETER	NONE
	81	VARMETER	NONE
	82		
	83		
	84		
	85	TEST & RESET SW.	ANNUNCIATOR
	86		
	87	SUPERVISORY LAMP	LINE RELAYS DC CONT.
	88		
	89		
	90	TEST SW.	CARRIER CURRENT
	91	CONTROL SW.	230KV GCB
	92		
	93	CUTOUT SW.	CARRIER CURRENT
	94	SYNCHRONIZING SW.	SYNCHROSCOPE
	95		
	96	CUTOUT SW.	RECLOSING RELAY
	97		
	98		
	99		
	100		
	101		
	102	TEST BLOCK-CURRENT	NONE
	103	TEST BLOCK-POTENTIAL	NONE
	104		
	105	SUPERVISORY LAMP	ANNUNCIATOR DC CONTROL
	234		
	235		
	236		
	237		

REFERENCE DRAWINGS

HA5E-366 MAIN CONTROL SWITCHBOARD

SYMBOL	ZONE	DESCRIPTION	DATE	BY

REVISIONS

HYDROELECTRIC DESIGN CENTER
PORTLAND, OR

U.S. ARMY ENGINEER DISTRICT
CORPS OF ENGINEERS
SAVANNAH, GEORGIA

HARTWELL MAJOR REHABILITATION - PHASE 2
HARTWELL DAM AND LAKE
SWITCHYARD UPGRADE
MAIN CONTROL BOARD
NEW EQUIPMENT
SAVANNAH RIVER GEORGIA AND S. CAROLINA

SIZE	SOLICITATION NO.	FILE NO.	PLATE
F	DACW21-03-B-0007	HAR0157	E-28

SCALE: SHEET 44

7 NOVEMBER 2002

HAP103TB.DGN HAP103E28.DGN

...\Har0157\03B07w\HAP103E28.dgn 03/24/2003 11:02:10 AM

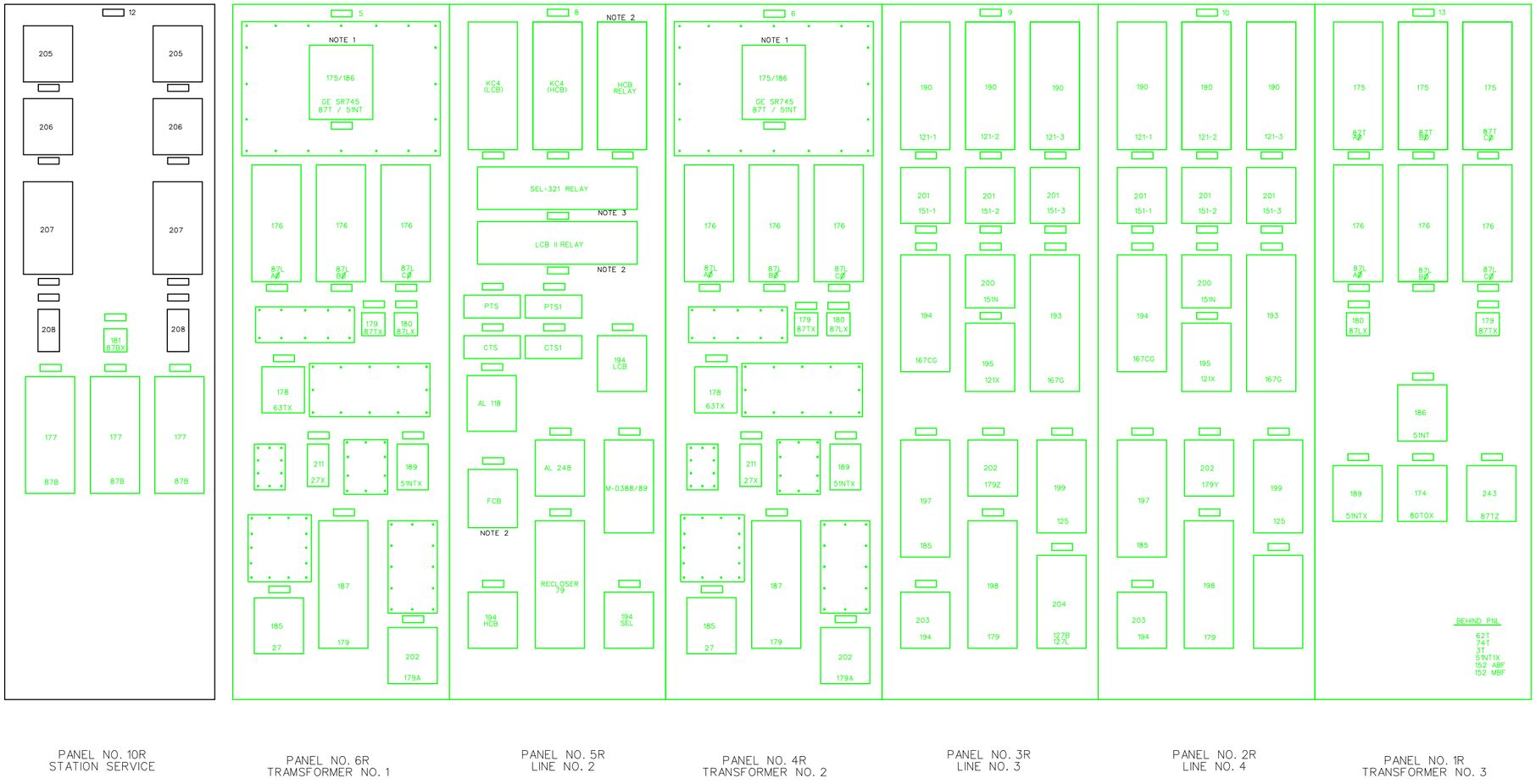

PANEL NO. 10R
STATION SERVICE

PANEL NO. 6R
TRAMSFORMER NO. 1

PANEL NO. 5R
LINE NO. 2

PANEL NO. 4R
TRANSFORMER NO. 2

PANEL NO. 3R
LINE NO. 3

PANEL NO. 2R
LINE NO. 4

PANEL NO. 1R
TRANSFORMER NO. 3

RELAY PANELS

SCALE: NTS

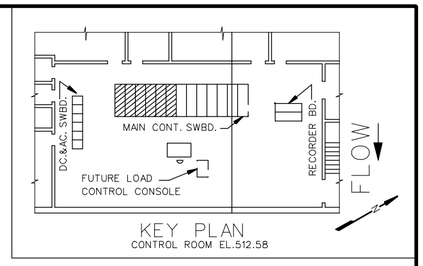

KEY PLAN
CONTROL ROOM EL.512.5B

NAMEPLATE SCHEDULE - RELAY PANELS

PNL.	NO.	NAMEPLATE	
PANEL NAMEPLATES	1	NAMEPLATE	GENERATOR NO. 1
	2	NAMEPLATE	GENERATOR NO. 2
	3	NAMEPLATE	GENERATOR NO. 3
	4	NAMEPLATE	GENERATOR NO. 4
	5	NAMEPLATE	TRANSFORMER NO. 1
	6	NAMEPLATE	TRANSFORMER NO. 2
	7		
	8	NAMEPLATE	LINE NO. 2
	9	NAMEPLATE	LINE NO. 3
	10	NAMEPLATE	LINE NO. 4
	11	NAMEPLATE	STATION SERVICE NOS. 1 & 2
	12	NAMEPLATE	STATION SERVICE & OSCILLOGRAPH
	13	NAMEPLATE	TRANSFORMER NO. 3
	14	NAMEPLATE	GENERATOR NO. 5
TRANS. AND PH. LINE PANELS	174	TRANSFORMER OIL FLOW AUXILIARY RELAY 80TOX	
	175	TRANSFORMER DIFFERENTIAL RELAY	
	176	POWERHOUSE LINE DIFFERENTIAL RELAY	
	177	BUS DIFFERENTIAL RELAY	
	178	TRANSFORMER GAS AUXILIARY RELAY	
	179	TRANSFORMER DIFFERENTIAL AUXILIARY RELAY (HAND RESET)	
	180	POWERHOUSE LINE DIFFERENTIAL AUXILIARY RELAY (HAND RESET)	
	181	BUS DIFFERENTIAL AUXILIARY RELAY (HAND RESET)	
	182		
	183		
	184		
	185	STATION SERVICE BUS UNDERVOLTAGE RELAY	
	186	TRANSFORMER NEUTRAL GROUND RELAY	
	187	RECLOSING RELAY	
	188		
	189	TRANSFORMER NEUTRAL AUXILIARY RELAY	
LINE PANELS	190	CARRIER DIRECTIONAL DISTANCE RELAY	
	191		
	192		
	193	DIRECTIONAL GROUND BACK-UP RELAY	
	194	CARRIER DIRECTIONAL GROUND RELAY	
	195	CARRIER CURRENT AUXILIARY TIMING RELAY	
	196		
	197	CARRIER CURRENT AUXILIARY RELAY	
	198	RECLOSING RELAY	
	199	SYNCHRONISM CHECK RELAY	
	200	GROUND OVERCURRENT INSTANTANEOUS BACK-UP RELAY	
	201	PHASE INSTANTANEOUS OVERCURRENT RELAY	
	202	SELECTIVE RECLOSING RELAY	
	203	AUXILIARY TRIP RELAY	
	204	VOLTAGE CHECK RELAY	
STATION SERVICE PANEL	205	OVERCURRENT RELAY PHASE A	
	206	OVERCURRENT RELAY PHASE C	
	207	RESIDUAL GROUND RELAY	
	208	AUXILIARY RESIDUAL GROUND RELAY	
	209		
	210		
	211	STATION SERVICE BUS VOLTAGE AUXILIARY RELAY 27X	
	238		
	239		
	240		
	241		
	242		
	243	TRANSFORMER WATER AUXILIARY RELAY 87TZ	
	244		
	245		

NOTES:

1. 87T/5INT RELAY FOR TRANSFORMERS 1 AND 2 SHALL BE RE-USED. SEE DRAWING E-30.
2. LCB II RELAY, HCB RELAY, AND FCB ON LINE 2 SHALL BE RE-USED. SEE DRAWING E-30.
3. EXISTING SEL-321 RELAY ON LINE 2 SHALL BE RE-USED ON LINE 4 FOR LPRB. SEE DRAWING E-30.

REFERENCE DRAWINGS:

HA5E-366 MAIN CONTROL SWITCHBOARD

SYMBOL	ZONE	DESCRIPTION	DATE	BY

REVISIONS

HYDROELECTRIC DESIGN CENTER
PORTLAND, OR

U.S. ARMY ENGINEER DISTRICT
CORPS OF ENGINEERS
SAVANNAH, GEORGIA

HARTWELL MAJOR REHABILITATION - PHASE 2
HARTWELL DAM AND LAKE
SWITCHYARD UPGRADE

MAIN RELAY BOARD
EQUIPMENT REMOVAL

SAVANNAH RIVER GEORGIA AND S. CAROLINA

SIZE	SOLICITATION NO.	FILE NO.	PLATE
F	DACW21-03-B-0007	HAR0157	E-29

SCALE: SHEET 45

HAP103TB.DGN HAP103E29.DGN

3 OCTOBER 2002
7:49:59

...\Har0157\03B07w\HAP103E29.dgn 03/24/2003 11:03:01 AM

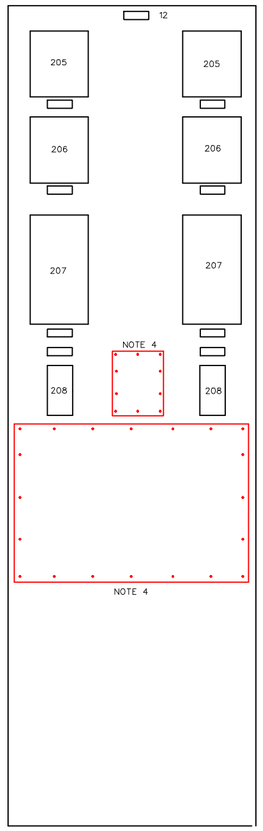

PANEL NO. 10R
STATION SERVICE

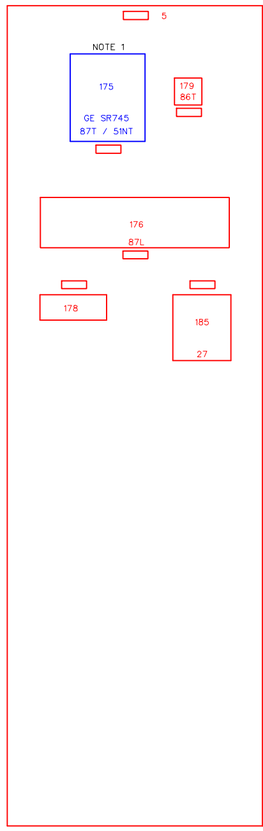

PANEL NO. 6R
TRANSFORMER NO. 1

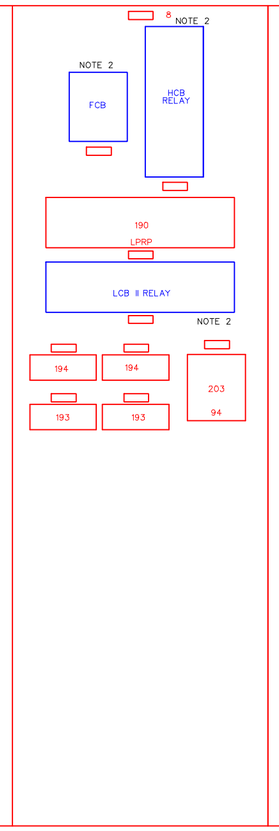

PANEL NO. 5R
LINE NO. 2

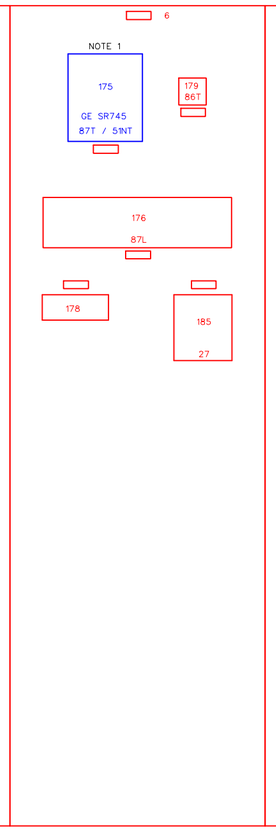

PANEL NO. 4R
TRANSFORMER NO. 2

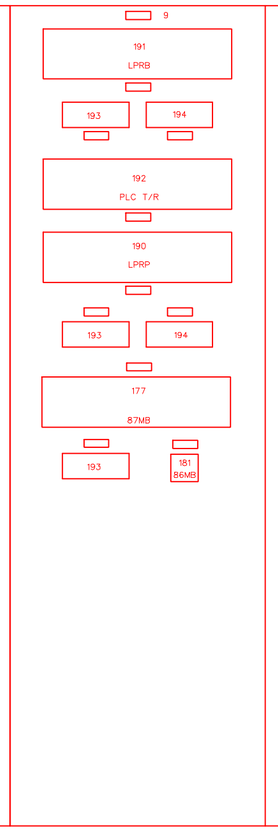

PANEL NO. 3R
LINE NO. 3

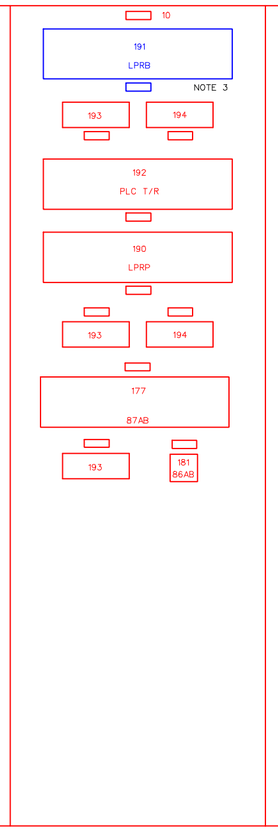

PANEL NO. 2R
LINE NO. 4

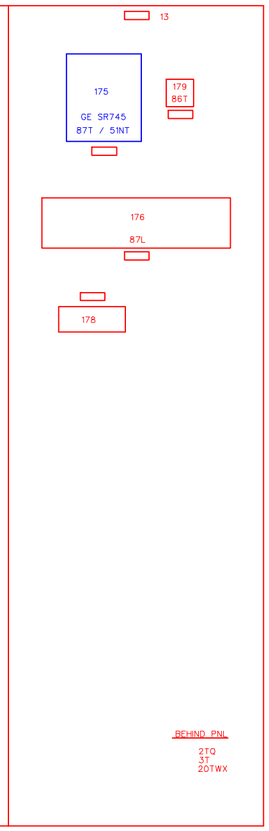

PANEL NO. 1R
TRANSFORMER NO. 3

RELAY PANELS
SCALE: NTS

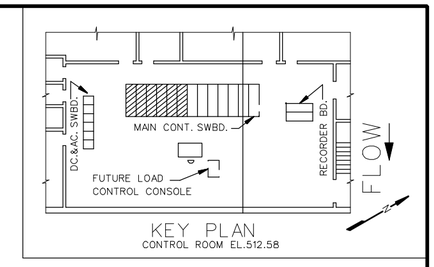

KEY PLAN
CONTROL ROOM EL.512.58

NAMEPLATE SCHEDULE - RELAY PANELS

PNL.	NO.	NAMEPLATE	
PANEL NAMEPLATES	1	NAMEPLATE	GENERATOR NO. 1
	2	NAMEPLATE	GENERATOR NO. 2
	3	NAMEPLATE	GENERATOR NO. 3
	4	NAMEPLATE	GENERATOR NO. 4
	5	NAMEPLATE	TRANSFORMER NO. 1
	6	NAMEPLATE	TRANSFORMER NO. 2
	7		
	8	NAMEPLATE	LINE NO. 2
	9	NAMEPLATE	LINE NO. 3
	10	NAMEPLATE	LINE NO. 4
	11	NAMEPLATE	STATION SERVICE NOS. 1 & 2
	12	NAMEPLATE	STATION SERVICE & OSCILLOGRAPH
	13	NAMEPLATE	TRANSFORMER NO. 3
	14	NAMEPLATE	GENERATOR NO. 5
TRANS. AND PH. LINE PANELS	174		
	175	MULTIFUNCTION TRANSFORMER PROTECTION RELAY (87T / 51NT)	
	176	POWERHOUSE LINE DIFFERENTIAL RELAY	
	177	BUS DIFFERENTIAL RELAY	
	178	TEST BLOCK - CURRENT	
	179	TRANSFORMER LOCKOUT RELAY (HAND RESET)	
	180		
	181	BUS DIFFERENTIAL LOCKOUT RELAY (HAND RESET)	
	182		
	183		
	184		
	185	STATION SERVICE BUS UNDERVOLTAGE RELAY	
	186		
	187		
	188		
	189		
LINE PANELS	190	MULTIFUNCTION LINE PROTECTION RELAY - PRIMARY (LPRP)	
	191	MULTIFUNCTION LINE PROTECTION RELAY - BACKUP (LPRB)	
	192	PLC TRANSMITTER / RECEIVER (PLC T/R)	
	193	TEST BLOCK - CURRENT	
	194	TEST BLOCK - POTENTIAL	
	195		
	196		
	197		
	198		
	199		
	200		
	201		
	202		
	203	AUXILIARY TRIP RELAY	
	204		
STATION SERVICE PANEL	205	OVERCURRENT RELAY PHASE A	
	206	OVERCURRENT RELAY PHASE C	
	207	RESIDUAL GROUND RELAY	
	208	AUXILIARY RESIDUAL GROUND RELAY	
	209		
	210		
	211		
	238		
	239		
	240		
	241		
	242		
	243		
	244		
	245		

NOTES:

1. 87T/51NT RELAY FOR TRANSFORMERS 1 AND 2 SHALL BE RE-USED. SEE DRAWING E-29.
2. LCB II RELAY, HCB RELAY, AND FCB ON LINE 2 SHALL BE RE-USED. SEE DRAWING E-29.
3. EXISTING SEL-321 RELAY ON LINE 2 SHALL BE RE-USED ON LINE 4 FOR LPRB. SEE DRAWING E-29.
4. CONTRACTOR SHALL PROVIDE BLANK STEEL COVER PLATES WHERE DEVICES ARE REMOVED.
5. CONTRACTOR SHALL PROVIDE BOXES OR BASE UNITS INSTALLED AND PRE-WIRED TO ACCEPT GFE THAT WILL BE INSTALLED ON THE NEW PANELS.

REFERENCE DRAWINGS:

HA5E-366 MAIN CONTROL SWITCHBOARD

SYMBOL	ZONE	DESCRIPTION	DATE	BY

REVISIONS

HYDROELECTRIC DESIGN CENTER
PORTLAND, OR

U.S. ARMY ENGINEER DISTRICT
CORPS OF ENGINEERS
SAVANNAH, GEORGIA

HARTWELL MAJOR REHABILITATION - PHASE 2
HARTWELL DAM AND LAKE
SWITCHYARD UPGRADE
MAIN RELAY BOARD
NEW EQUIPMENT
SAVANNAH RIVER GEORGIA AND S. CAROLINA

SIZE	SOLICITATION NO.	FILE NO.	PLATE
F	DACW21-03-B-0007	HAR0157	E-30

SCALE: SHEET 46

18 DECEMBER 2002
7:49:59

HAP103TB.DGN HAP103E30.DGN

...\Har0157\03B07w\HAP103E30.dgn 03/24/2003 11:03:50 AM

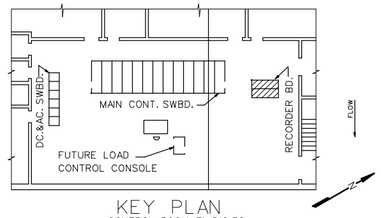

KEY PLAN
CONTROL ROOM EL.512.58

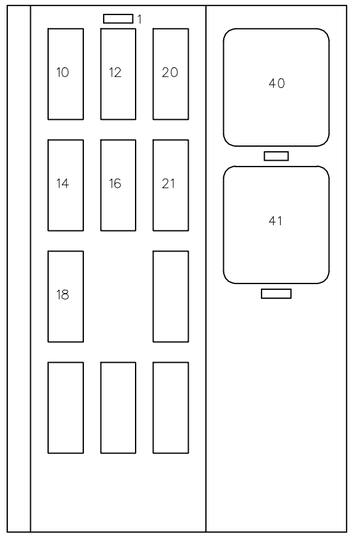

FRONT ELEVATION
SCALE: NTS

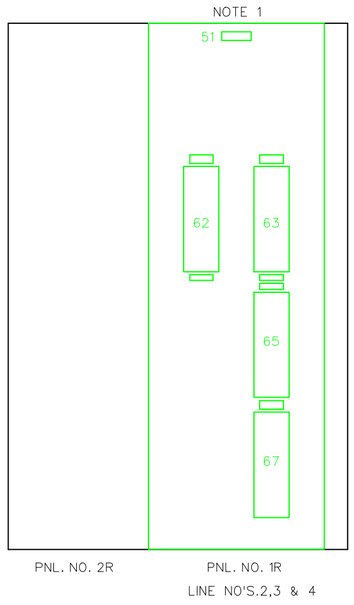

REAR ELEVATION
SCALE: NTS

NAMEPLATE DESIGNATION				
PNL	NO.	FIRST LINE	SECOND LINE	THIRD LINE
FRONT EL.	1	GEN. & STA. SERVICE		
	10	WATTHOUR METER	GENERATOR NO.1	
	12	WATTHOUR METER	GENERATOR NO.2	
	14	WATTHOUR METER	GENERATOR NO.3	
	16	WATTHOUR METER	GENERATOR NO.4	
	18	WATTHOUR METER	GENERATOR NO.5	
	20	WATTHOUR METER	STATION SERVICE NO.1	
	21	WATTHOUR METER	STATION SERVICE NO.2	
	40	WATER LEVEL	RESERVOIR	
	41	WATER LEVEL	TAILRACE	
REAR EL.	51	WATTHOUR METERS	LINE	
	62	WATTHOUR METER-OUT	LINE NO.2	
	63	WATTHOUR METER	LINE NO.2	
	65	WATTHOUR METER	LINE NO.3	
	67	WATTHOUR METER	LINE NO.4	

NOTE:

1. REMOVE EXISTING PANEL 1R AND INSTALL NEW BLANK PANEL.

REFERENCE DRAWINGS

HA5E-365 RECORDER BOARD

SYMBOL	ZONE	DESCRIPTION	DATE	BY

REVISIONS

HYDROELECTRIC DESIGN CENTER
PORTLAND, OR

U.S. ARMY ENGINEER DISTRICT
CORPS OF ENGINEERS
SAVANNAH, GEORGIA

HARTWELL MAJOR REHABILITATION - PHASE 2
HARTWELL DAM AND LAKE
SWITCHYARD UPGRADE
RECORDER BOARD
EQUIPMENT REMOVAL
SAVANNAH RIVER GEORGIA AND S. CAROLINA

SIZE	SOLICITATION NO.	FILE NO.	PLATE
F	DACW21-03-B-0007	HAR0157	E-31

SCALE: SHEET 47

HAP103TB.DGN HAP103E31.DGN

...\Har0157\03B07w\HAP103E31.dgn 03/24/2003 11:04:19 AM

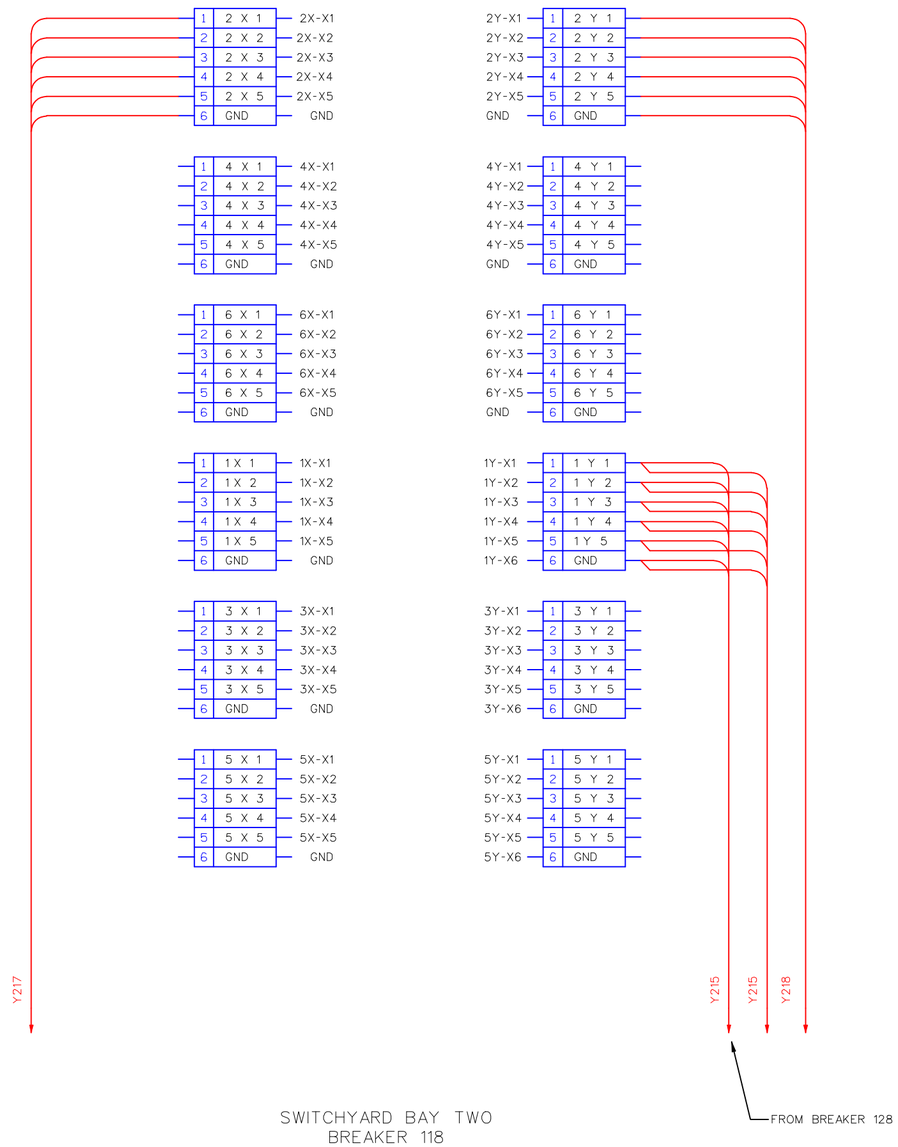

SWITCHYARD BAY TWO
BREAKER 118
CT CONNECTIONS

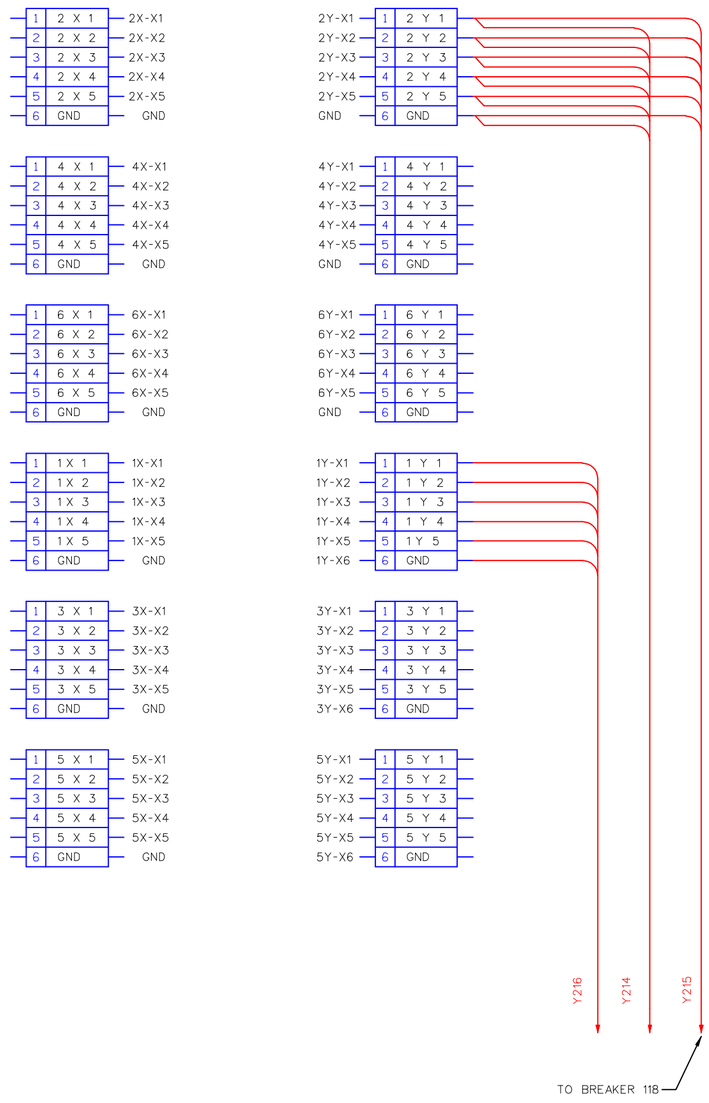

SWITCHYARD BAY TWO
BREAKER 128
CT CONNECTIONS

WORK WITH ALSTROM DRAWINGS:

HG14C2131A
HG14C2132

NOTES:

1. THE CONTRACTOR IS RESPONSIBLE FOR VERIFYING ALL CABLES AND CONNECTIONS.

SYMBOL	ZONE	DESCRIPTION	DATE	BY

REVISIONS

HYDROELECTRIC DESIGN CENTER
PORTLAND, OR

U.S. ARMY ENGINEER DISTRICT
CORPS OF ENGINEERS
SAVANNAH, GEORGIA

HARTWELL MAJOR REHABILITATION - PHASE 2
HARTWELL DAM AND LAKE
SWITCHYARD UPGRADE
BREAKERS NO. 118 AND 128
CT CONNECTIONS
SAVANNAH RIVER GEORGIA AND S. CAROLINA

SIZE	SOLICITATION NO.	FILE NO.	PLATE
F	DACW21-03-B-0007	HAR0157	E-35

SCALE: SHEET 51

03 Mar 2003
08:29:29

HAP103TB.DGN HAP103E35.DGN

...\Har0157\03B07w\HAP103E35.dgn 03/24/2003 11:05:04 AM

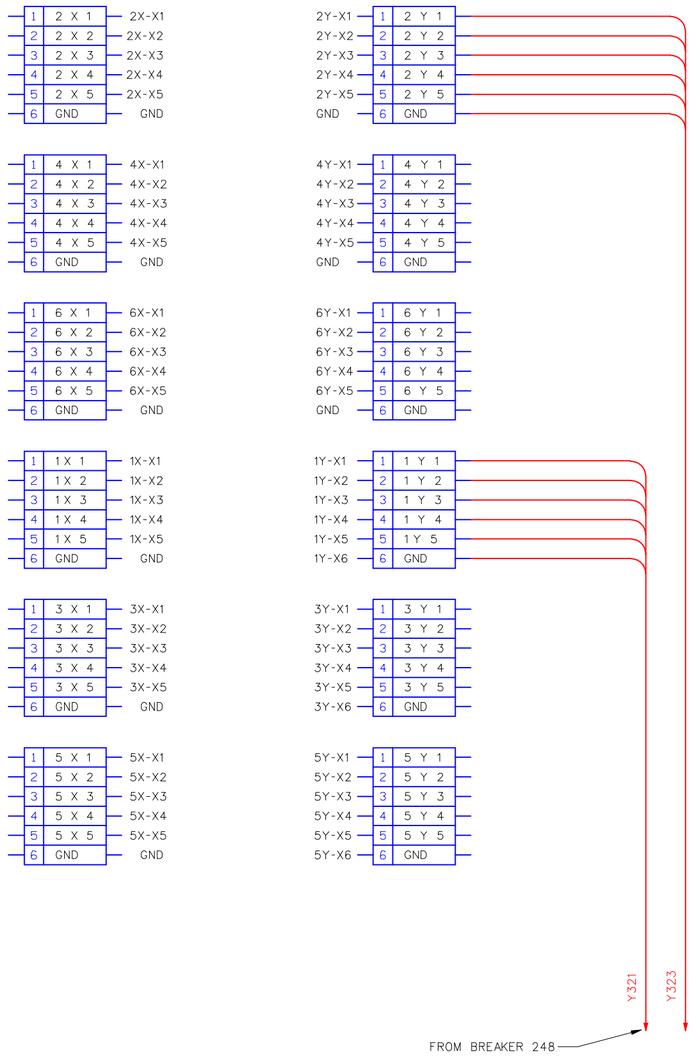

SWITCHYARD BAY THREE
BREAKER 238
CT CONNECTIONS

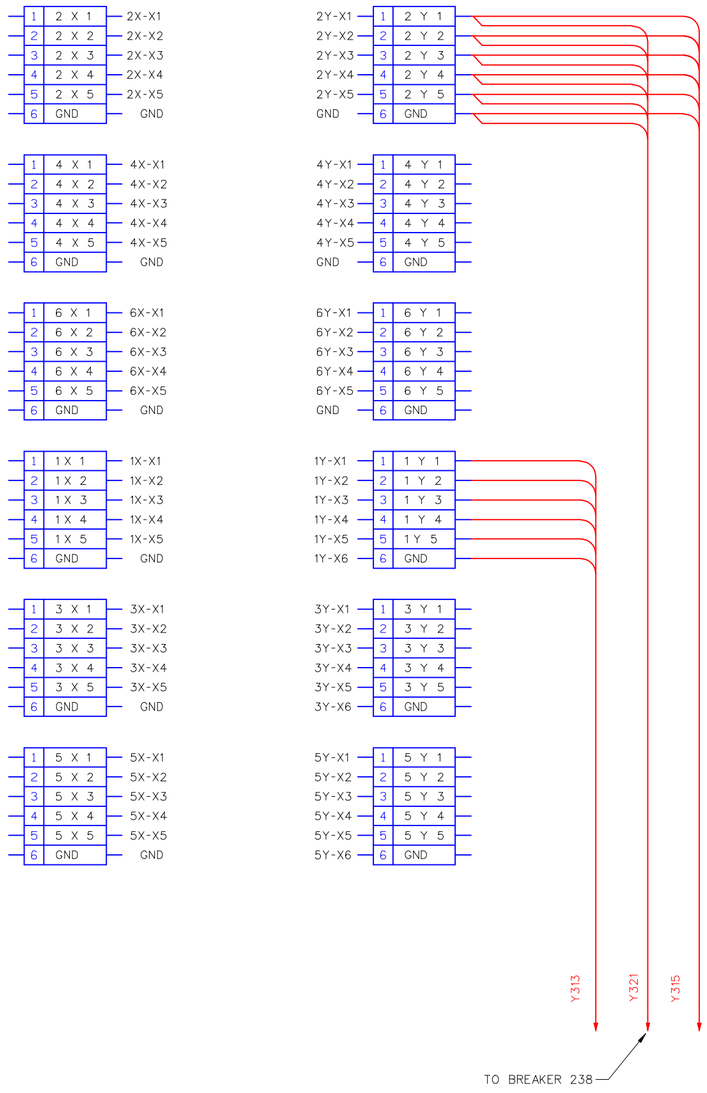

SWITCHYARD BAY THREE
BREAKER 248
CT CONNECTIONS

WORK WITH ALSTROM DRAWINGS:

HG14C2131A
HG14C2132

NOTES:

1. THE CONTRACTOR IS RESPONSIBLE FOR VERIFYING ALL CABLES AND CONNECTIONS.

SYMBOL	ZONE	DESCRIPTION	DATE	BY

REVISIONS

HYDROELECTRIC DESIGN CENTER
PORTLAND, OR

U.S. ARMY ENGINEER DISTRICT
CORPS OF ENGINEERS
SAVANNAH, GEORGIA

HARTWELL MAJOR REHABILITATION - PHASE 2
HARTWELL DAM AND LAKE
SWITCHYARD UPGRADE
BREAKERS NO. 238 AND 248
CT CONNECTIONS
SAVANNAH RIVER GEORGIA AND S. CAROLINA

SIZE	SOLICITATION NO.	FILE NO.	PLATE
F	DACW21-03-B-0007	HAR0157	E-36

SCALE: SHEET 52

HAP103TB.DGN HAP103E36.DGN

...\Har0157\03B07w\HAP103E36.dgn 03/24/2003 11:05:52 AM

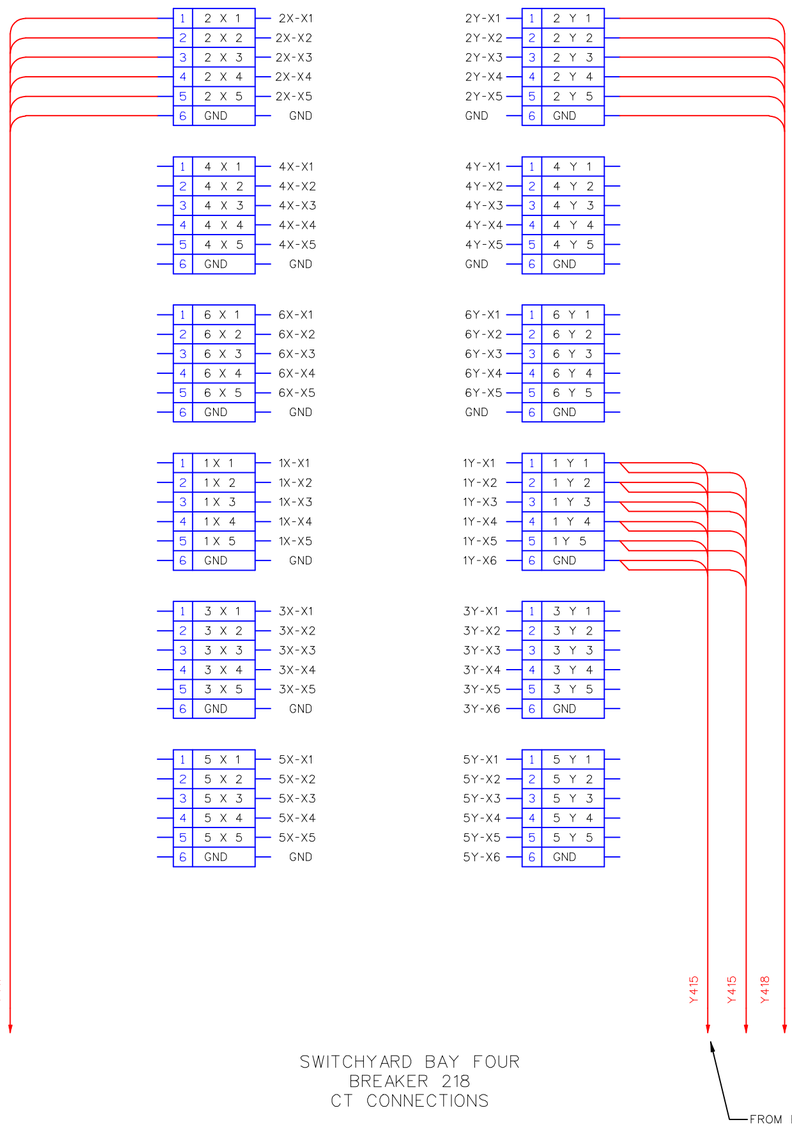

SWITCHYARD BAY FOUR
BREAKER 218
CT CONNECTIONS

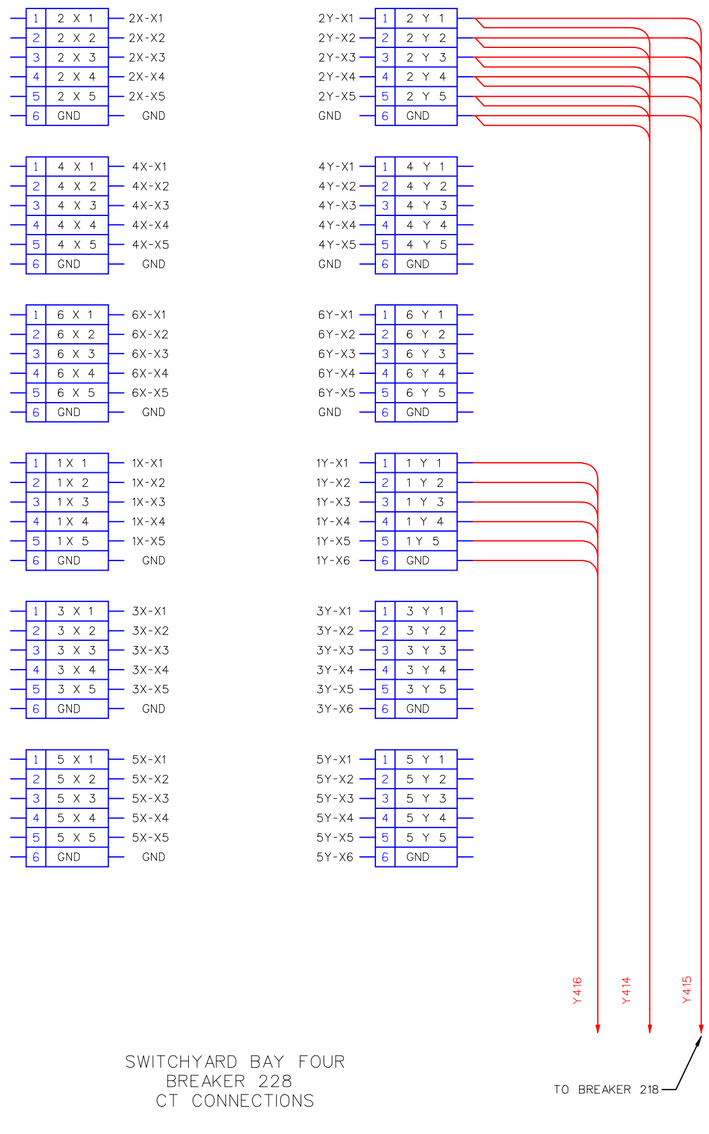

SWITCHYARD BAY FOUR
BREAKER 228
CT CONNECTIONS

WORK WITH ALSTROM DRAWINGS:

HG14C2131A
HG14C2132

NOTES:

1. THE CONTRACTOR IS RESPONSIBLE FOR VERIFYING ALL CABLES AND CONNECTIONS.

SYMBOL	ZONE	DESCRIPTION	DATE	BY

REVISIONS

HYDROELECTRIC DESIGN CENTER
PORTLAND, OR

U.S. ARMY ENGINEER DISTRICT
CORPS OF ENGINEERS
SAVANNAH, GEORGIA

HARTWELL MAJOR REHABILITATION - PHASE 2
HARTWELL DAM AND LAKE
SWITCHYARD UPGRADE
BREAKERS NO. 218 AND 228
CT CONNECTIONS
SAVANNAH RIVER GEORGIA AND S. CAROLINA

SIZE	SOLICITATION NO.	FILE NO.	PLATE
F	DACW21-03-B-0007	HAR0157	E-37

SCALE: SHEET 53

03 Mar 2003
08:39:49

HAP103TB.DGN HAP103E37.DGN

...\Har0157\03B07w\HAP103E37.dgn 03/24/2003 11:07:00 AM

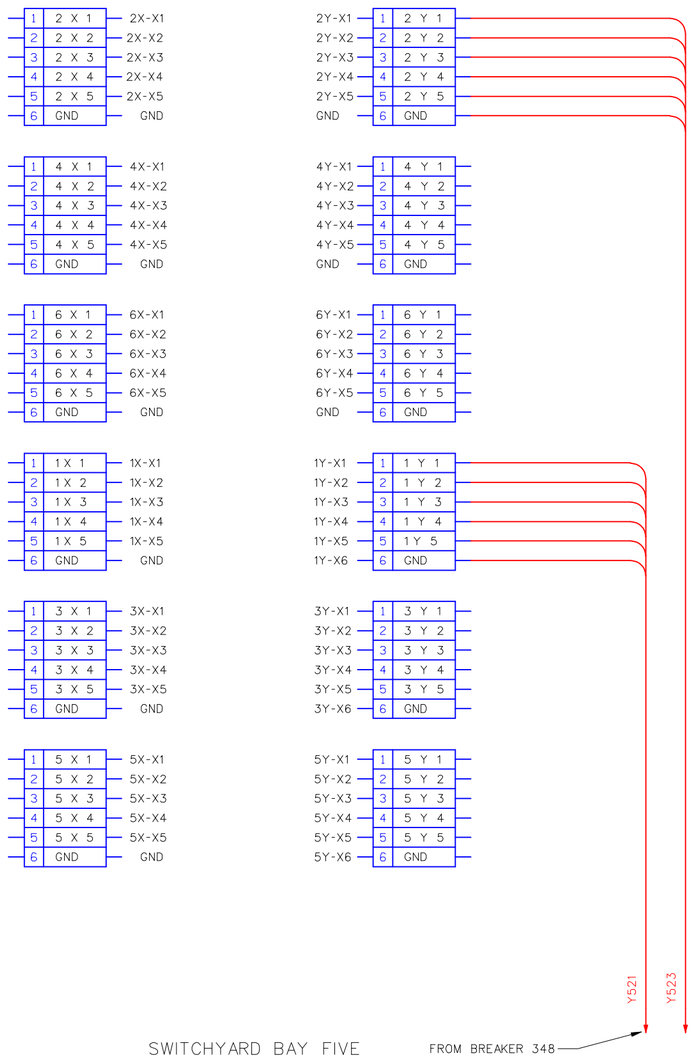

SWITCHYARD BAY FIVE
BREAKER 338
CT CONNECTIONS

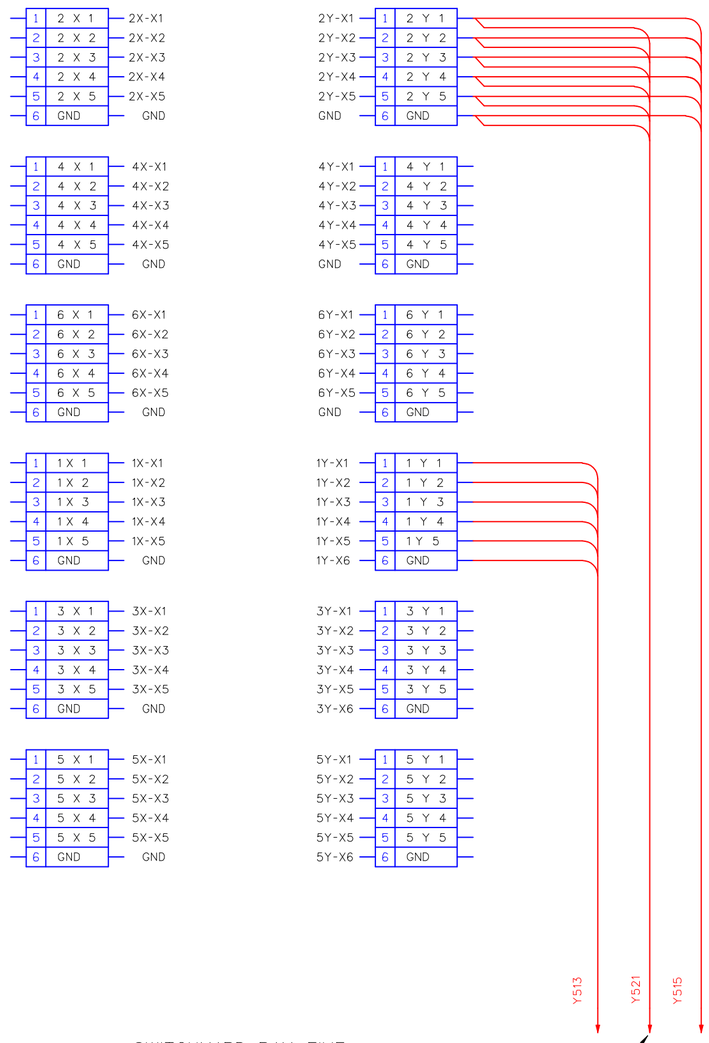

SWITCHYARD BAY FIVE
BREAKER 348
CT CONNECTIONS

WORK WITH ARS DRAWINGS:

HG14C2131A
HG14C2132

NOTES:

1. THE CONTRACTOR IS RESPONSIBLE FOR VERIFYING ALL CABLES AND CONNECTIONS.

SYMBOL	ZONE	DESCRIPTION	DATE	BY

REVISIONS

HYDROELECTRIC DESIGN CENTER
PORTLAND, OR

U.S. ARMY ENGINEER DISTRICT
CORPS OF ENGINEERS
SAVANNAH, GEORGIA

HARTWELL MAJOR REHABILITATION - PHASE 2
HARTWELL DAM AND LAKE
SWITCHYARD UPGRADE
BREAKERS NO. 338 AND 348
CT CONNECTIONS
SAVANNAH RIVER GEORGIA AND S. CAROLINA

SIZE	SOLICITATION NO.	FILE NO.	PLATE
F	DACW21-03-B-0007	HAR0157	E-38

SCALE: SHEET 54

HAP103TB.DGN HAP103E38.DGN

...\Har0157\03B07w\HAP103E38.dgn 03/24/2003 11:08:02 AM

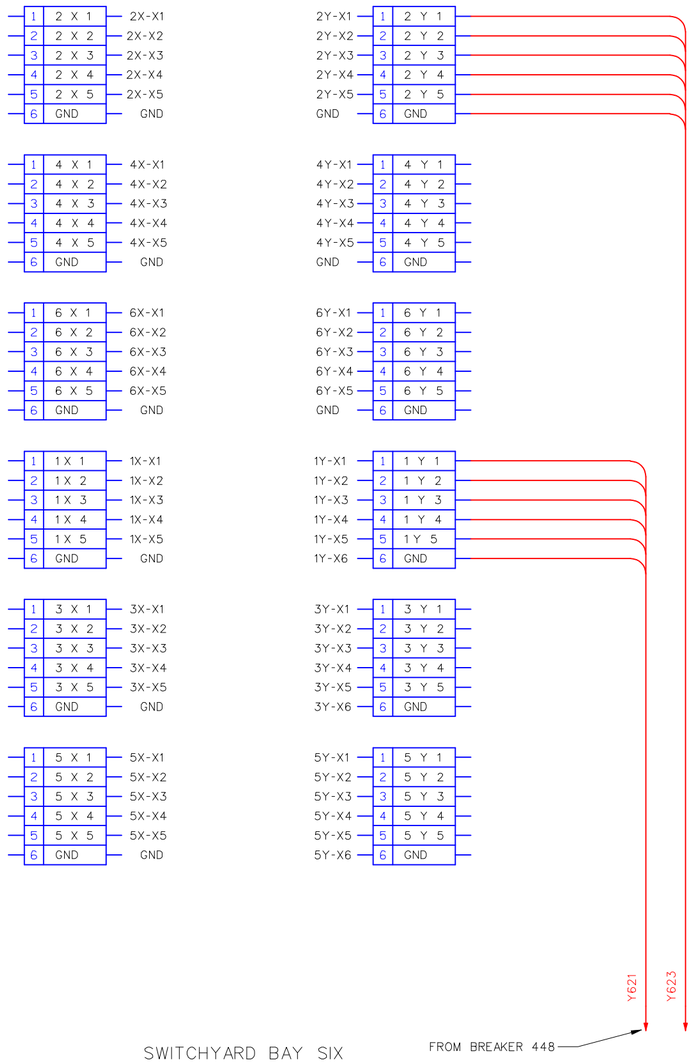

SWITCHYARD BAY SIX
BREAKER 438
CT CONNECTIONS

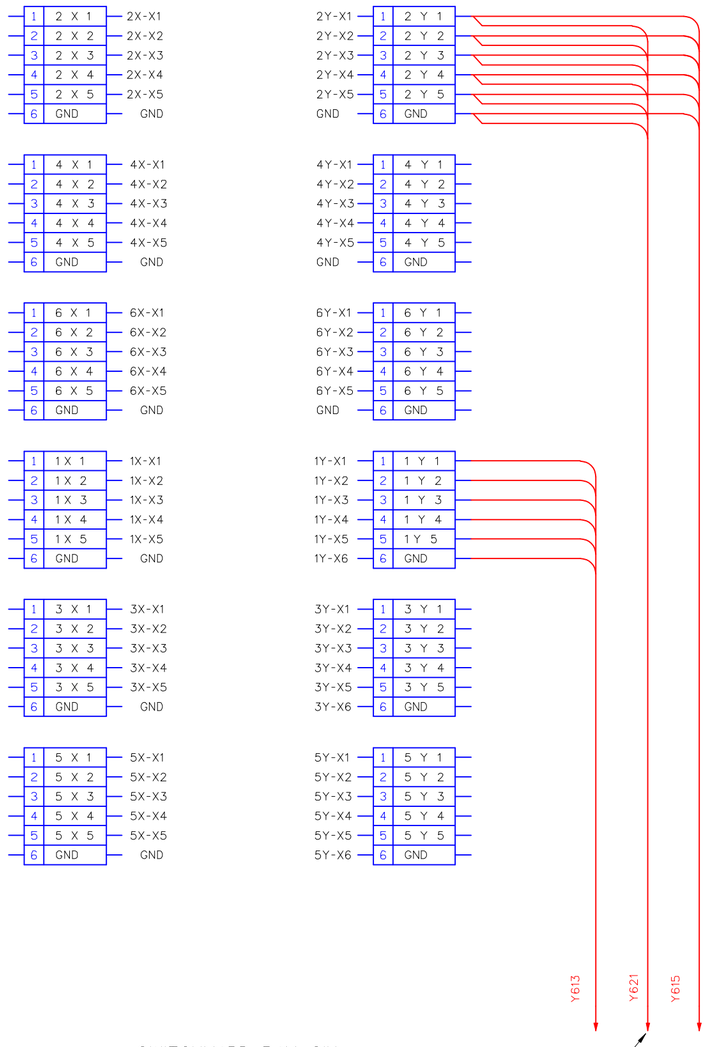

SWITCHYARD BAY SIX
BREAKER 448
CT CONNECTIONS

WORK WITH ALSTROM DRAWINGS:

HG14C2131A
HG14C2132

NOTES:

1. THE CONTRACTOR IS RESPONSIBLE FOR VERIFYING ALL CABLES AND CONNECTIONS.

SYMBOL	ZONE	DESCRIPTION	DATE	BY

REVISIONS

HYDROELECTRIC DESIGN CENTER
PORTLAND, OR

U.S. ARMY ENGINEER DISTRICT
CORPS OF ENGINEERS
SAVANNAH, GEORGIA

HARTWELL MAJOR REHABILITATION - PHASE 2
HARTWELL DAM AND LAKE
SWITCHYARD UPGRADE
BREAKERS NO. 438 AND 448
CT CONNECTIONS
SAVANNAH RIVER GEORGIA AND S. CAROLINA

SIZE	SOLICITATION NO.	FILE NO.	PLATE
F	DACW21-03-B-0007	HAR0157	E-39

SCALE: SHEET 55

HAP103TB.DGN HAP103E39.DGN

...\Har0157\03B07w\HAP103E39.dgn 03/24/2003 11:25:15 AM

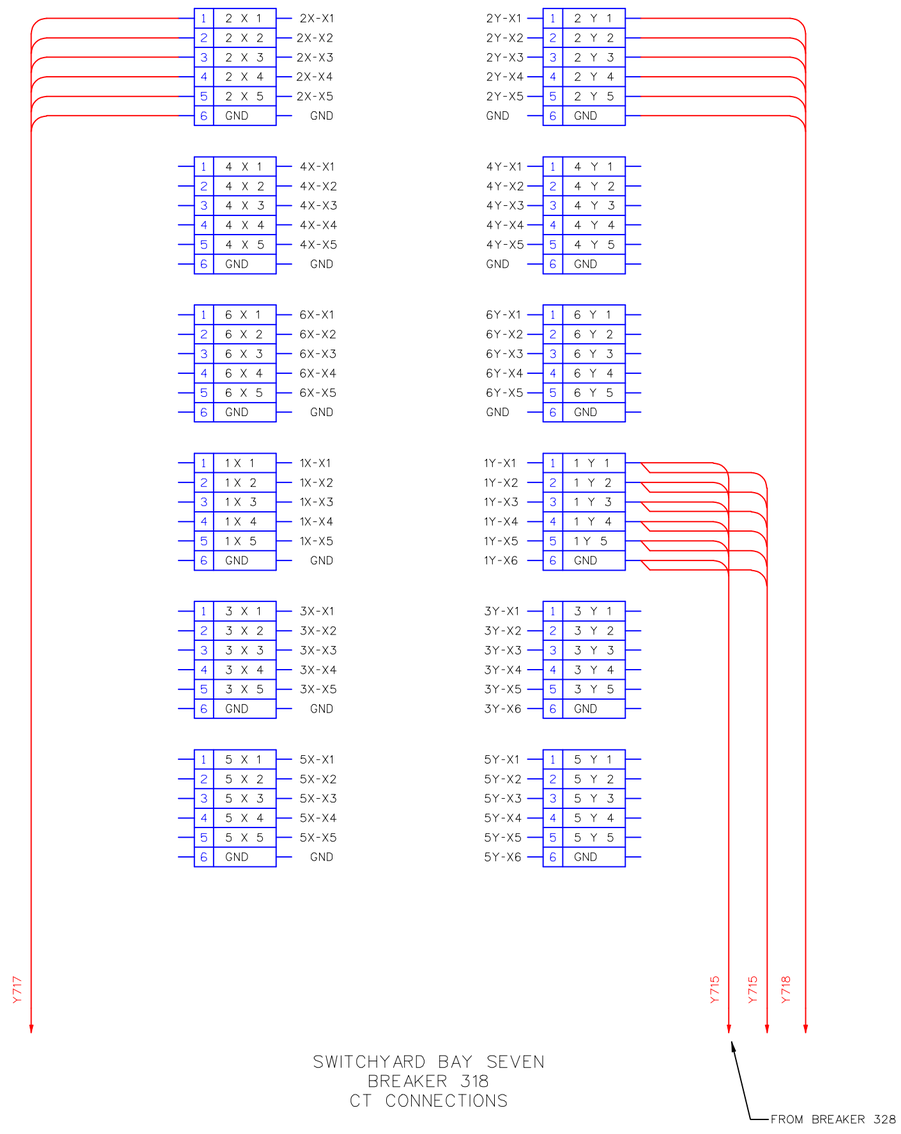

SWITCHYARD BAY SEVEN
BREAKER 318
CT CONNECTIONS

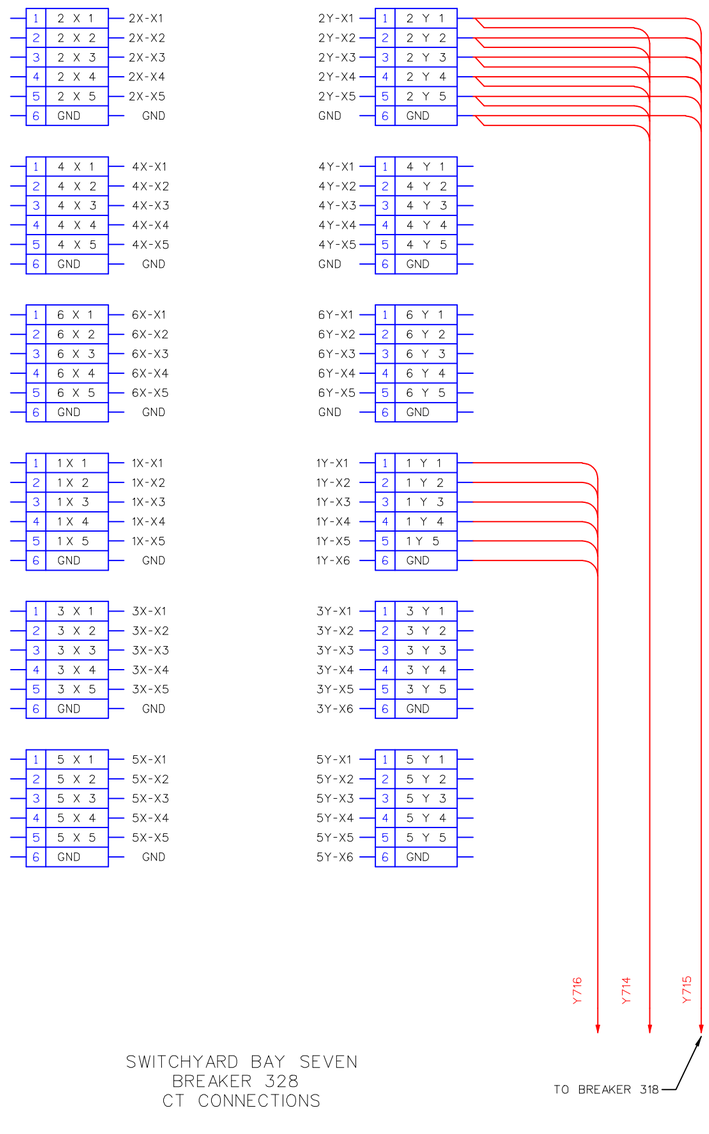

SWITCHYARD BAY SEVEN
BREAKER 328
CT CONNECTIONS

WORK WITH ALSTROM DRAWINGS:

HG14C2131A
HG14C2132

NOTES:

1. THE CONTRACTOR IS RESPONSIBLE FOR VERIFYING ALL CABLES AND CONNECTIONS.

SYMBOL	ZONE	DESCRIPTION	DATE	BY

REVISIONS

HYDROELECTRIC DESIGN CENTER
PORTLAND, OR

U.S. ARMY ENGINEER DISTRICT
CORPS OF ENGINEERS
SAVANNAH, GEORGIA

HARTWELL MAJOR REHABILITATION - PHASE 2
HARTWELL DAM AND LAKE
SWITCHYARD UPGRADE
BREAKERS NO. 318 AND 328
CT CONNECTIONS
SAVANNAH RIVER GEORGIA AND S. CAROLINA

SIZE	SOLICITATION NO.	FILE NO.	PLATE
F	DACW21-03-B-0007	HAR0157	E-40

SCALE: SHEET 56

HAP103TB.DGN HAP103E40.DGN

...\Har0157\03B07w\HAP103E40.dgn 03/24/2003 11:26:03 AM

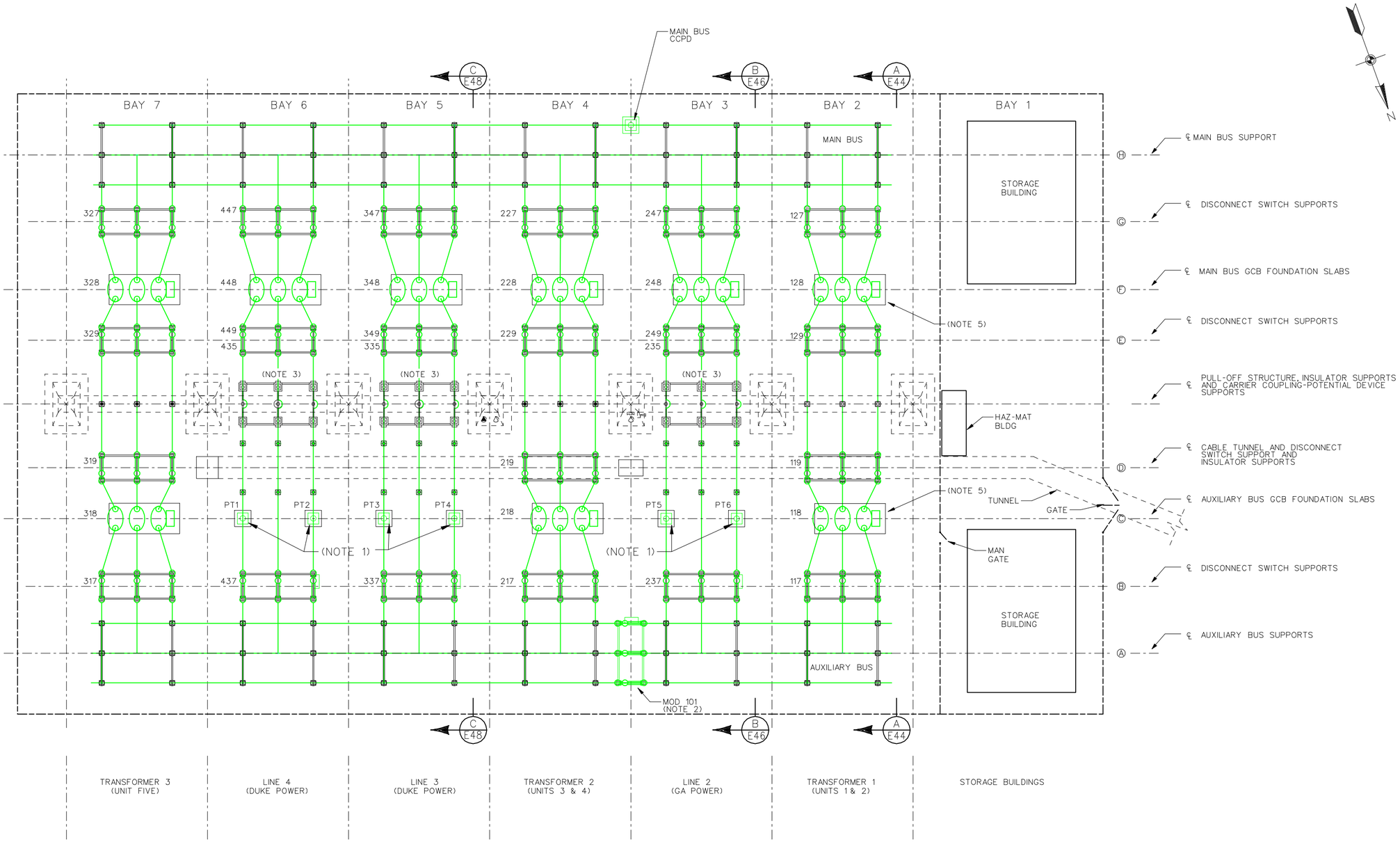

PLAN - SWITCHYARD LAYOUT
EQUIPMENT REMOVAL

LEGEND:

- (GREEN LINE) EQUIPMENT WITH ITEMS TO BE REMOVED, REPLACED, OR DISPOSED OF BY CONTRACTOR
- (RED LINE) EQUIPMENT WITH ITEMS FURNISHED AND/OR INSTALLED BY CONTRACTOR
- (BLUE LINE) GOVERNMENT FURNISHED EQUIPMENT INSTALLED BY THE CONTRACTOR UNDER THIS CONTRACT.
- (BLACK LINE) EXISTING FEATURE

NOTES:

1. LINE PT'S SHALL BE RELOCATED UNDER THE EAST END OF THE MAIN AND AUXILIARY BUS. SEE DRAWING E-42.
2. SEE DRAWING E-54 FOR EQUIPMENT REMOVAL DETAILS.
3. LINE METERING EQUIMENT DETAILS ARE SHOWN ON DRAWINGS E-52 AND E-53
4. FOOTINGS FOR EQUIPMENT BEING REMOVED OR RELOCATED ARE ALSO TO BE REMOVED.
5. SEE DRAWING E-54 FOR PAD CHANGES REQUIRED.

SYMBOL	ZONE	DESCRIPTION	DATE	BY

REVISIONS

HYDROELECTRIC DESIGN CENTER
PORTLAND, OR

U.S. ARMY ENGINEER DISTRICT
CORPS OF ENGINEERS
SAVANNAH, GEORGIA

HARTWELL MAJOR REHABILITATION - PHASE 2
HARTWELL DAM AND LAKE
SWITCHYARD UPGRADE
SWITCHYARD PLAN
EXISTING CONFIGURATION
SAVANNAH RIVER GEORGIA AND S. CAROLINA

SIZE	SOLICITATION NO.	FILE NO.	PLATE
F	DACW21-03-B-0007	HAR0157	E-41

SCALE: SHEET 57

22 Dec 2002
13:42:05

HAP103TB.DGN HAP103E41.DGN

...\Har0157\03B07w\HAP103E41.DGN 03/24/2003 11:26:47 AM

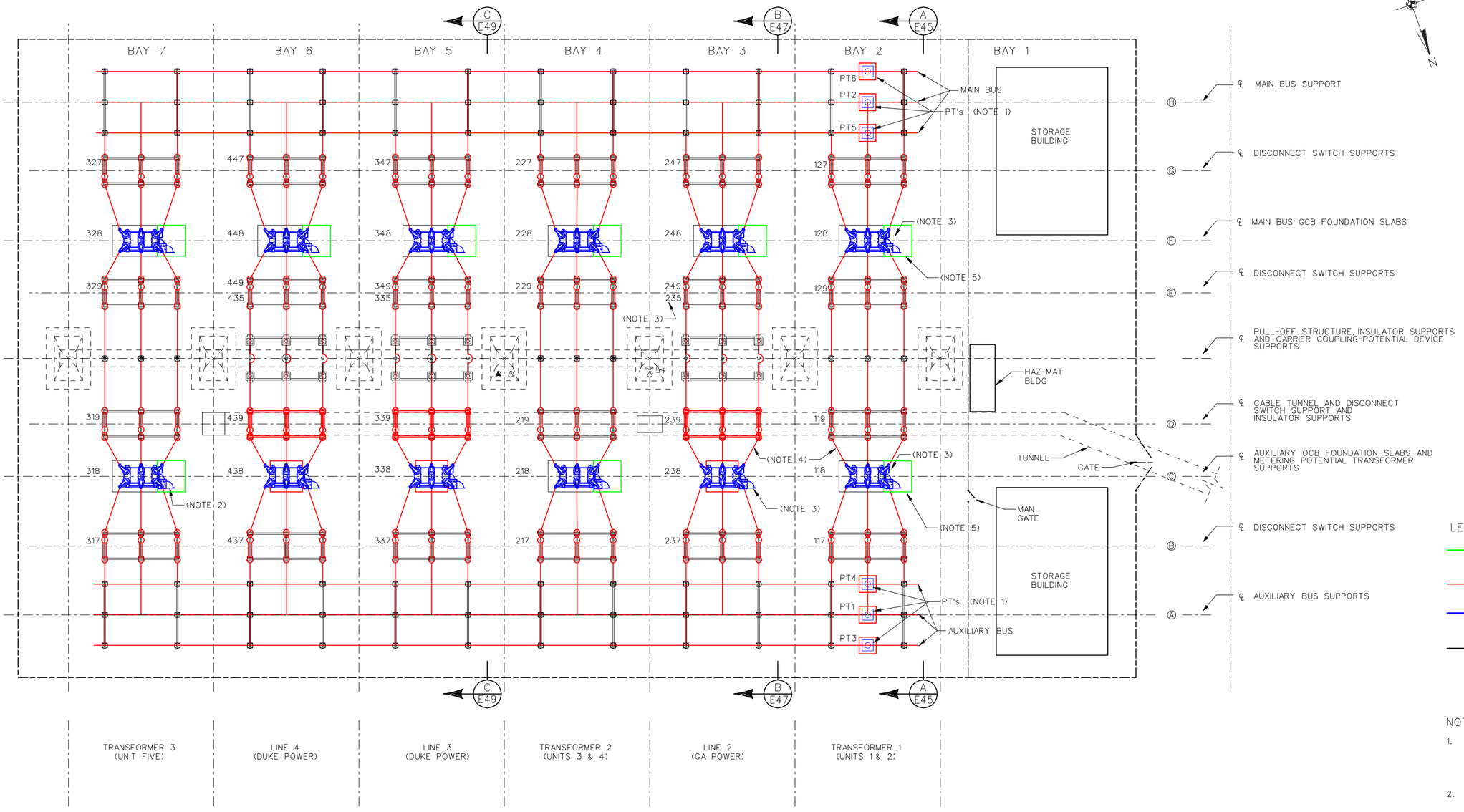

PLAN-SWITCHYARD LAYOUT

SCALE: 1/16" = 1'-0"
2'0 10' 20' 30'

LEGEND:

- (GREEN LINE) EQUIPMENT WITH ITEMS TO BE REMOVED, REPLACED, OR DISPOSED OF BY CONTRACTOR
- (RED LINE) EQUIPMENT WITH ITEMS FURNISHED AND/OR INSTALLED BY CONTRACTOR
- (BLUE LINE) GOVERNMENT FURNISHED EQUIPMENT INSTALLED BY THE CONTRACTOR UNDER THIS CONTRACT.
- (BLACK LINE) EXISTING EQUIPMENT

NOTES:

1. SYNCHRONIZING PT'S RELOCATED FROM LINE BUS TO EAST END OF MAIN AND AUXILIARY BUSES. PT'S NO. 1 AND 2 SHALL BE INSTALLED ON PHASE B. SEE DRAWING E41. NEW STEEL PEDESTAL AND CONCRETE FOOTINGS REQUIRED.
2. DEVICE NUMBERS 235, 335, AND 435 IDENTIFY THE GROUNDING SWITCH.
3. CONTROL CONDUITS SHALL BE INSTALLED AS SHOWN IN DETAILS ON DRAWING E-54.
4. TEMPORARY CONNECTIONS BETWEEN NEW GCB'S AND EXISTING DISCONNECTS SHALL BE USED UNTIL THE DISCONNECTS ARE REPLACED, SHALL BE 750MCM STINGER CABLES. PERMANENT BUS TUBING SHALL BE INSTALLED AT THESE LOCATIONS WHEN NEW DISCONNECTS ARE INSTALLED.
5. A SECTION OF THE EXISTING CONCRETE BREAKER PAD SHALL BE REMOVED TO FACILITATE CONDUIT ROUTING FROM THE TUNNEL TO THE NEW BREAKER CONTROL BOX AS DONE IN BAYS THREE, FIVE, AND SIX WITH THE NEW BREAKER PADS. SEE DRAWING E-54 FOR MORE INFORMATION.

SYMBOL	ZONE	DESCRIPTION	DATE	BY
		REVISIONS		

HYDROELECTRIC DESIGN CENTER
PORTLAND, OR

U.S. ARMY ENGINEER DISTRICT
CORPS OF ENGINEERS
SAVANNAH, GEORGIA

HARTWELL MAJOR REHABILITATION - PHASE 2
HARTWELL DAM AND LAKE
SWITCHYARD UPGRADE

SWITCHYARD PLAN
NEW CONFIGURATION

SAVANNAH RIVER GEORGIA AND S. CAROLINA

SIZE	SOLICITATION NO.	FILE NO.	PLATE
F	DACW21-03-B-0007	HAR0157	E-42
SCALE:		SHEET 58	

HAP103TB.DGN HAP103E42.DGN

...\Har0157\03B07w\HAP103E42.DGN 03/24/2003 11:27:25 AM

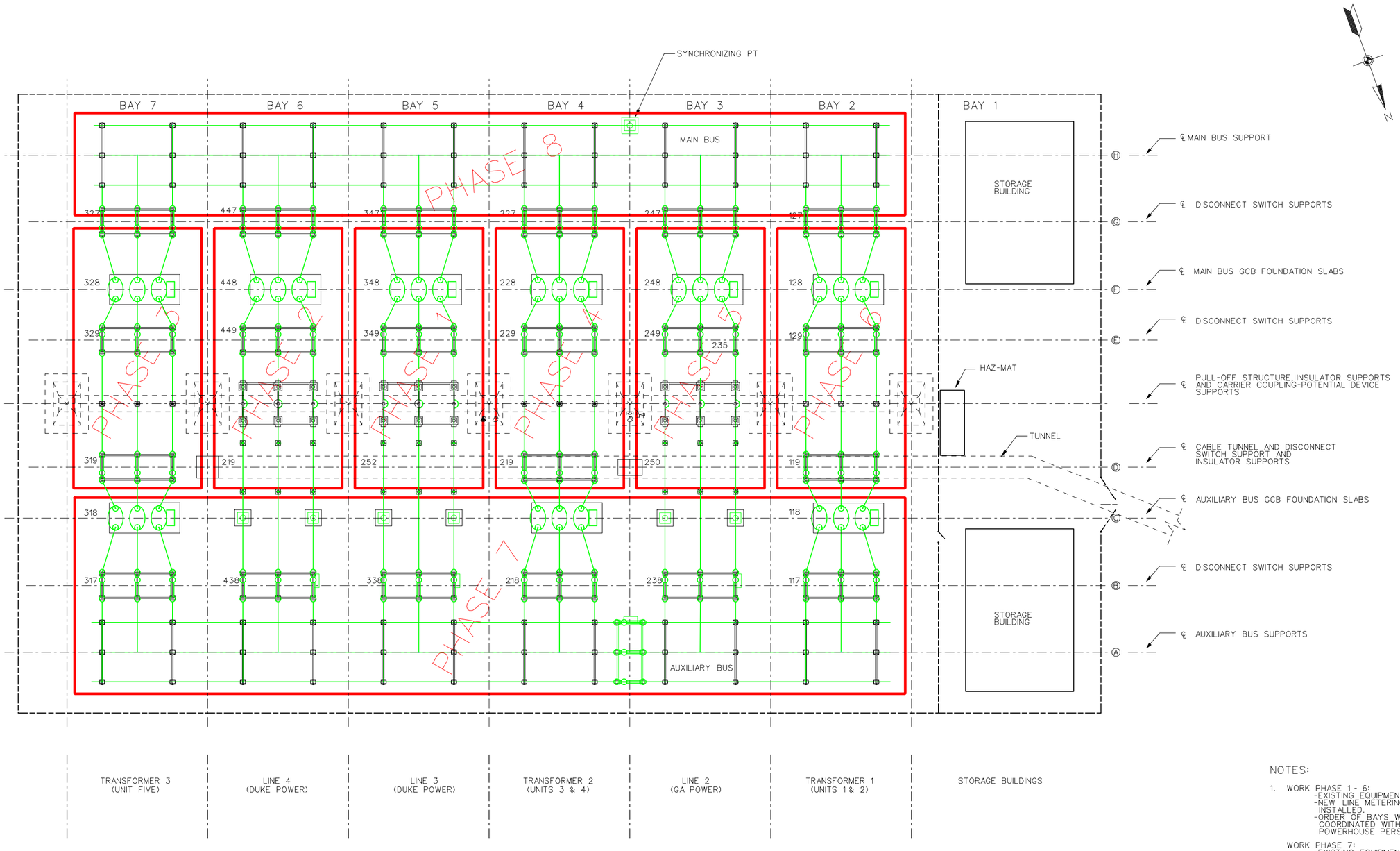

PLAN-SWITCHYARD LAYOUT

NOTES:

1. WORK PHASE 1 - 6:
   - -EXISTING EQUIPMENT REMOVED
   - -NEW LINE METERING EQUIPMENT INSTALLED.
   - -ORDER OF BAYS WORKED ON SHALL BE COORDINATED WITH UTILITIES AND POWERHOUSE PERSONNEL.

   WORK PHASE 7:
   - -EXISTING EQUIPMENT REMOVED
   - -GF CIRCUIT BREAKERS INSTALLED
   - -DISCONNECT SWITCHES REPLACED
   - -MAIN BUS REPLACED
   - -BUS INSULATORS CLEANED AND TESTED
   - -BUS SYNCHRONIZING PTS INSTALLED

   WORK PHASE 8:
   - -EXISTING EQUIPMENT REMOVED
   - -GF CIRCUIT BREAKERS INSTALLED
   - -DISCONNECT SWITCHES REPLACED
   - -MAIN BUS REPLACED
   - -BUS INSULATORS CLEANED AND TESTED
   - -BUS SYNCHRONIZING PTS INSTALLED

2. ALL WORK SHALL BE COORDINATED WITH THE COR AND UTILITY COMPANIES AND OTHER ONGOING CONTRACTS AS NEEDED. REFERENCE CONTRACT SPECIAL CLAUSES SECTION.

SYMBOL	ZONE	DESCRIPTION	DATE	BY
		REVISIONS		

HYDROELECTRIC DESIGN CENTER
PORTLAND, OR

U.S. ARMY ENGINEER DISTRICT
CORPS OF ENGINEERS
SAVANNAH, GEORGIA

HARTWELL MAJOR REHABILITATION - PHASE 2
HARTWELL DAM AND LAKE
SWITCHYARD UPGRADE

SWITCHYARD WORK SEQUENCE
PHASE 1 - PHASE 8

SAVANNAH RIVER GEORGIA AND S. CAROLINA

SIZE	SOLICITATION NO.	FILE NO.	PLATE
F	DACW21-03-B-0007	HAR0157	E-43

SCALE: SHEET 59

10 Mar 2003
QB:HAG7

HAP103TB.DGN HAP103E43.DGN

...\Har0157\03B07w\HAP103E43.dgn 03/24/2003 11:28:01 AM

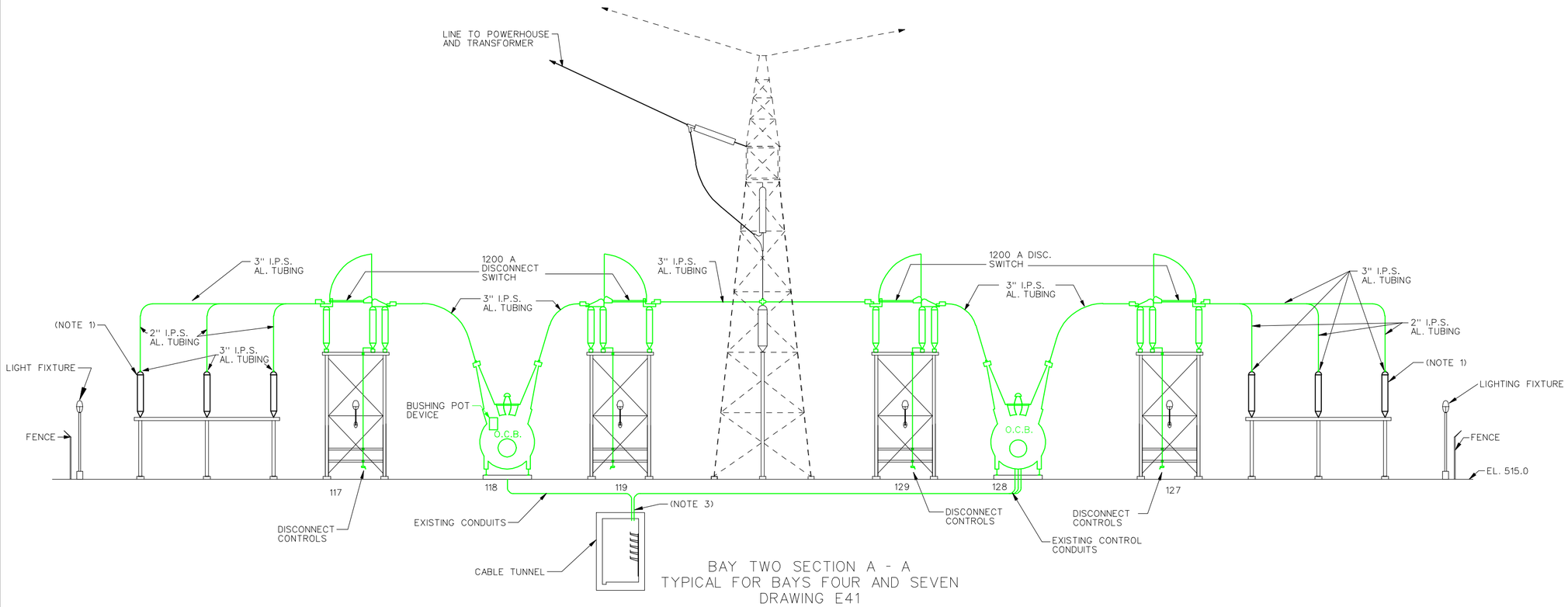

BAY TWO SECTION A - A
TYPICAL FOR BAYS FOUR AND SEVEN
DRAWING E41

SCALE: 1/8" = 1'-0"
12" 0 5' 10' 15'

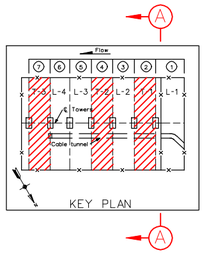

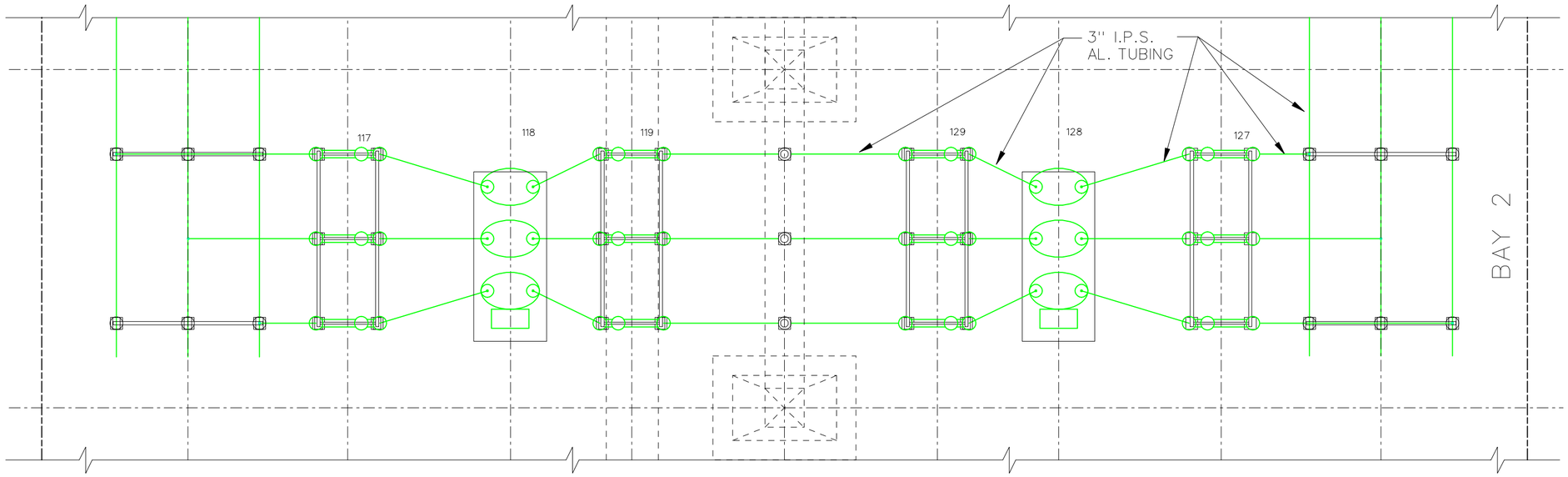

BAY TWO
TYPICAL FOR BAYS FOUR AND SEVEN
PLAN VIEW

SCALE: 1/8" = 1'-0"
12" 0 5' 10' 15'

LEGEND:

- (GREEN LINE) EQUIPMENT WITH ITEMS TO BE REMOVED, REPLACED, OR DISPOSED OF BY CONTRACTOR
- (RED LINE) EQUIPMENT WITH ITEMS FURNISHED AND/OR INSTALLED BY CONTRACTOR
- (BLUE LINE) GOVERNMENT FURNISHED EQUIPMENT INSTALLED BY THE CONTRACTOR UNDER THIS CONTRACT.
- (BLACK LINE) EXISTING FEATURE

NOTES:

1. EXISTING BUS INSULATORS SHALL BE CLEANED AND TESTED AS PER SECTION 16050 AND REUSED.
2. DEVICE IDENTIFICATION NUMBERS ARE FOR BAY TWO. SEE PLATE E-41 FOR BAYS FOUR AND SEVEN
3. EXISTINIG CONDUITS BETWEEN TUNNEL AND EXISTING EQUIPMENT SHALL BE REMOVED AND NEW CONDUITS INSTALLED BETWEEN EQUIPMENT AND TUNNEL. EXISTING CONDUITS SHALL BE DRILLED OUT OF TUNNEL ROOF, NEW CONDUITS INSTALLED AND SEALED WITH POR-CRAX HP AS PER DETAIL DRAWING E-54.

SYMBOL	ZONE	DESCRIPTION	DATE	BY

REVISIONS

HYDROELECTRIC DESIGN CENTER
PORTLAND, OR

U.S. ARMY ENGINEER DISTRICT
CORPS OF ENGINEERS
SAVANNAH, GEORGIA

HARTWELL MAJOR REHABILITATION - PHASE 2
HARTWELL DAM AND LAKE
SWITCHYARD UPGRADE
SWITCHYARD BAYS 2, 4, 7
EQUIPMENT REMOVAL
SAVANNAH RIVER GEORGIA AND S. CAROLINA

SIZE	SOLICITATION NO.	FILE NO.	PLATE
F	DACW21-03-B-0007	HAR0157	E-44

SCALE: SHEET 60

25 Feb 2003
13:19:06

HAP103TB.DGN HAP103E44.DGN

...\Har0157\03B07w\HAP103E44.DGN 03/24/2003 11:28:40 AM

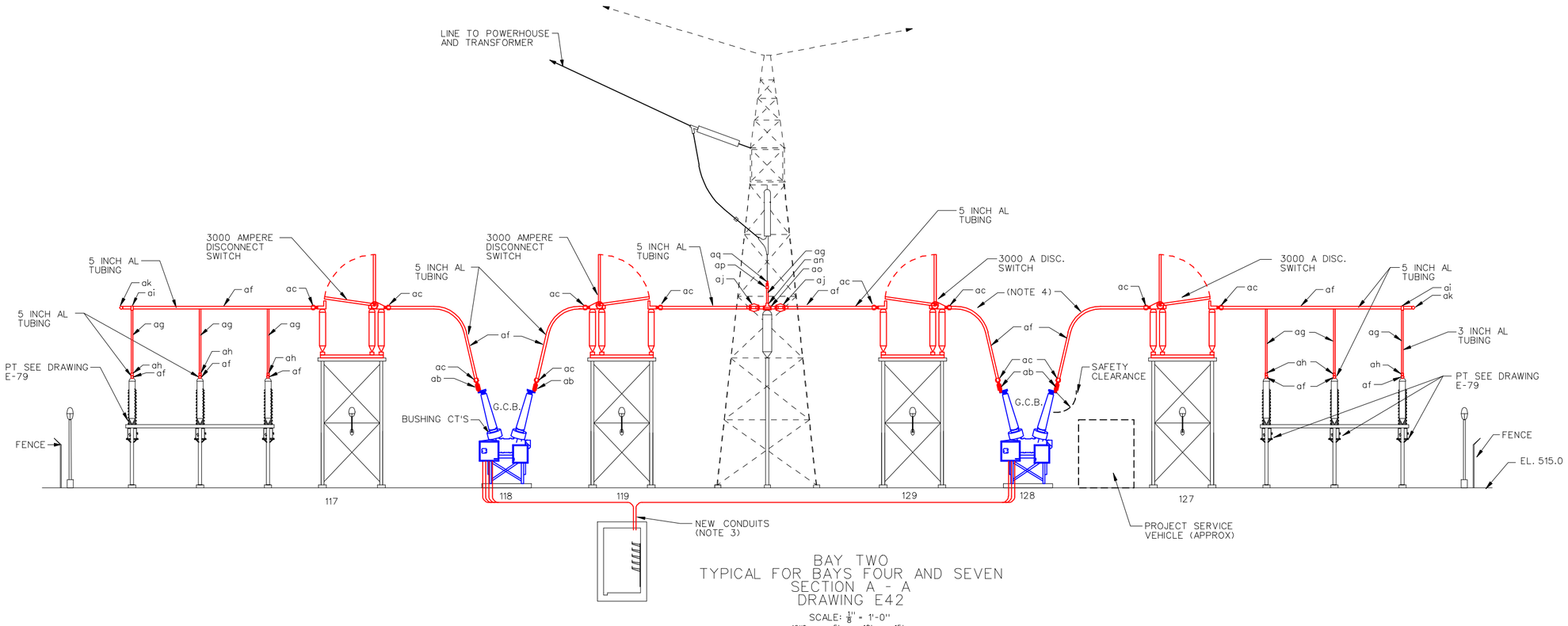

BAY TWO
TYPICAL FOR BAYS FOUR AND SEVEN
SECTION A - A
DRAWING E42

SCALE: 1/8" = 1'-0"

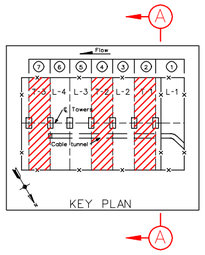

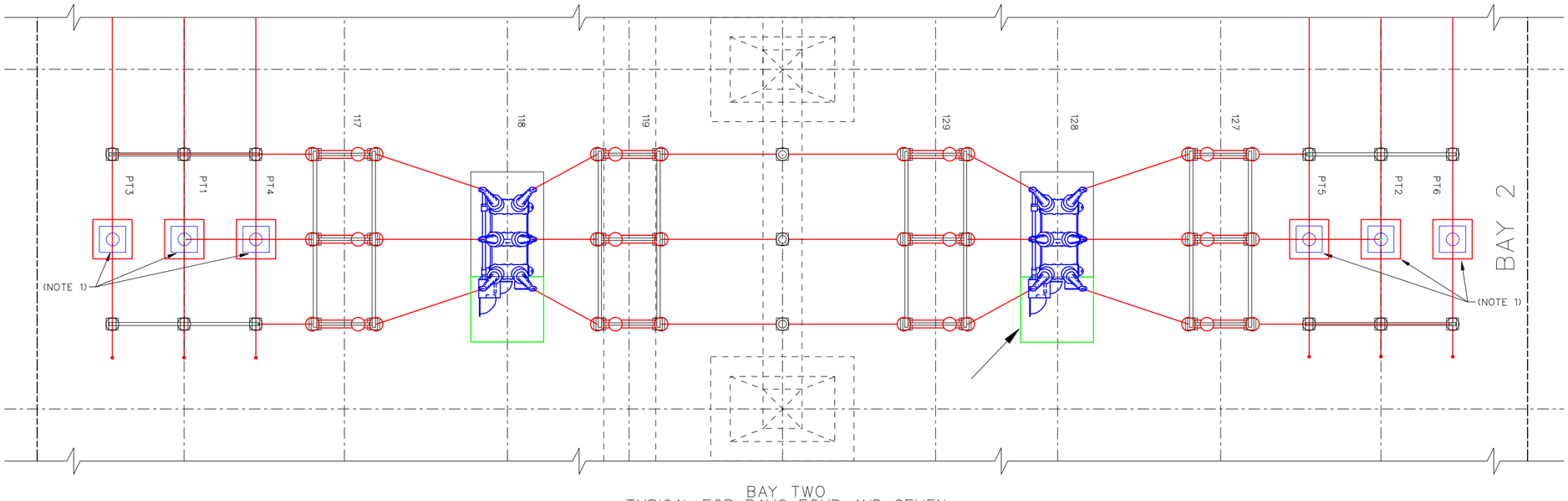

BAY TWO
TYPICAL FOR BAYS FOUR AND SEVEN
PLAN VIEW

SCALE: 1/8" = 1'-0"

LEGEND:

- (GREEN LINE) EQUIPMENT WITH ITEMS TO BE REMOVED, REPLACED, OR DISPOSED OF BY CONTRACTOR
- (RED LINE) EQUIPMENT WITH ITEMS FURNISHED AND/OR INSTALLED BY CONTRACTOR
- (BLUE LINE) GOVERNMENT FURNISHED EQUIPMENT INSTALLED BY THE CONTRACTOR UNDER THIS CONTRACT.
- (BLACK LINE) EXISTING FEATURE

NOTES:

1. SYNCHRONIZING CCPD'S RELOCATED FROM LINE BUS TO EAST END OF MAIN AND AUXILIARY BUSES. PT'S NO. 1 AND 2 SHALL BE INSTALLED ON PHASE B. SEE DRAWING E-42.
2. FOR BUS FITTINGS AND PIECES, SEE MATERIALS LIST DRAWING E-55.
3. EXISTING CONDUITS BETWEEN TUNNEL AND EXISTING OCB'S SHALL BE REMOVED AND NEW CONDUITS ROUTED BETWEEN GCB'S AND TUNNEL. EXISTING CONDUITS SHALL BE DRILLED OUT OF TUNNEL ROOF, NEW CONDUITS INSTALLED AND SEALED WITH POR-CRAX HP AS PER DETAIL DRAWING E-93.
4. BUS BENDING SHALL BE FIELD VERIFIED FOR CORRECT FIT SUCH THAT NO TWISTING OR SIDE FORCES ARE APPLIED TO FITTINGS AFTER INSTALLATION.

SYMBOL	ZONE	DESCRIPTION	DATE	BY

REVISIONS

HYDROELECTRIC DESIGN CENTER
PORTLAND, OR

U.S. ARMY ENGINEER DISTRICT
CORPS OF ENGINEERS
SAVANNAH, GEORGIA

HARTWELL MAJOR REHABILITATION - PHASE 2
HARTWELL DAM AND LAKE
SWITCHYARD UPGRADE
SWITCHYARD BAYS 2, 4, 7
NEW EQUIPMENT
SAVANNAH RIVER GEORGIA AND S. CAROLINA

SIZE	SOLICITATION NO.	FILE NO.	PLATE
F	DACW21-03-B-0007	HAR0157	E-45

SCALE: SHEET 61

20 Dec 2002
13:46:25

HAP103TB.DGN HAP103E45.DGN

...\Har0157\03B07w\HAP103E45.dgn 03/24/2003 11:29:26 AM

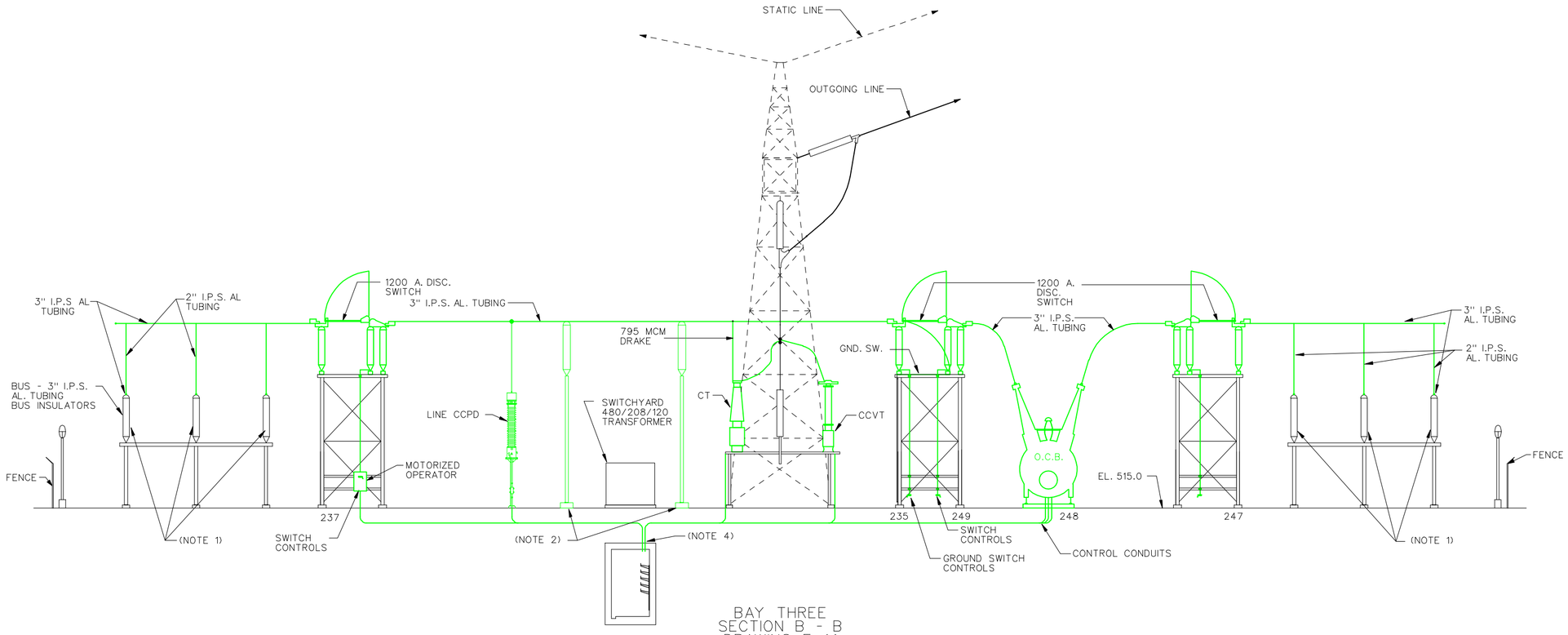

BAY THREE
SECTION B - B
DRAWING E-41

SCALE: 1/8" = 1'-0"

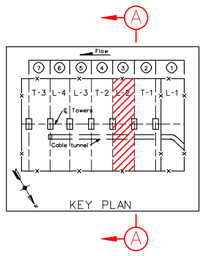

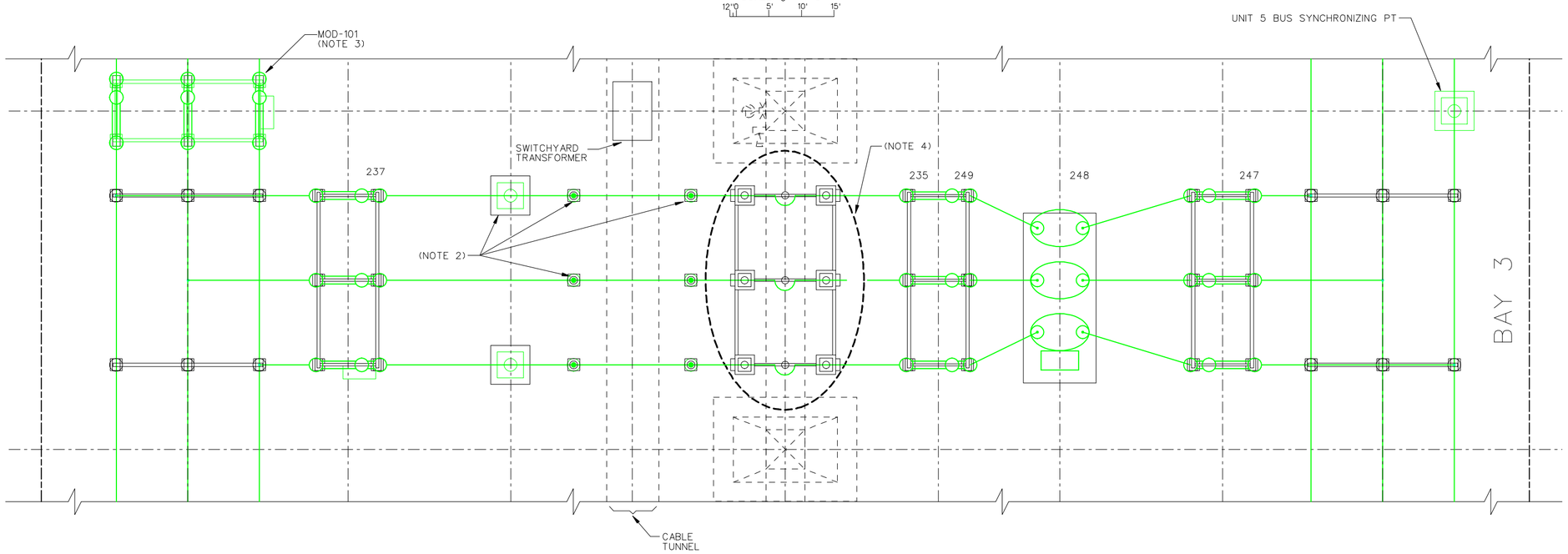

BAY THREE
PLAN VIEW

SCALE: 1/8" = 1'-0"

LEGEND:

- (GREEN LINE) EQUIPMENT WITH ITEMS TO BE REMOVED, REPLACED, OR DISPOSED OF BY CONTRACTOR
- (RED LINE) EQUIPMENT WITH ITEMS FURNISHED AND/OR INSTALLED BY CONTRACTOR
- (BLUE LINE) GOVERNMENT FURNISHED EQUIPMENT INSTALLED THIS CONTRACT.
- (BLACK LINE) EXISTING FEATURE

NOTES:

1. EXISTING BUS INSULATORS SHALL BE CLEANED AND TESTED AS PER SECTION 16050 AND REUSED.
2. EXISTING CONCRETE FOOTINGS SHALL BE REMOVED FOR EQUIPMENT BEING REMOVED OR RELOCATED.
3. MOD-101 SHALL BE REMOVED WITH ALL CONTROLS, SUPPORTS, FOOTINGS, AND CABLES.
4. 5. EXISTINIG CONDUITS BETWEEN TUNNEL AND EXISTING EQUIPMENT SHALL BE REMOVED AND NEW CONDUITS INSTALLED BETWEEN EQUIPMENT AND TUNNEL. EXISTING CONDUITS SHALL BE DRILLED OUT OF TUNNEL ROOF, NEW CONDUITS INSTALLED AND SEALED WITH POR-CRAX HP AS PER DETAIL DRAWING E-54
6. EQUIPMENT NOT SHOWN, WORK WITH DRAWING E-52.

SYMBOL	ZONE	DESCRIPTION	DATE	BY

REVISIONS

HYDROELECTRIC DESIGN CENTER
PORTLAND, OR

U.S. ARMY ENGINEER DISTRICT
CORPS OF ENGINEERS
SAVANNAH, GEORGIA

HARTWELL MAJOR REHABILITATION - PHASE 2
HARTWELL DAM AND LAKE
SWITCHYARD UPGRADE
SWITCHYARD BAY 3
EQUIPMENT REMOVAL
SAVANNAH RIVER GEORGIA AND S. CAROLINA

SIZE	SOLICITATION NO.	FILE NO.	PLATE
F	DACW21-03-B-0007	HAR0157	E-46

SCALE: SHEET 62

25 Feb 2003 14:09:23

HAP103TB.DGN HAP103E46.DGN

...\Har0157\03B07w\HAP103E46.DGN 03/24/2003 11:30:00 AM

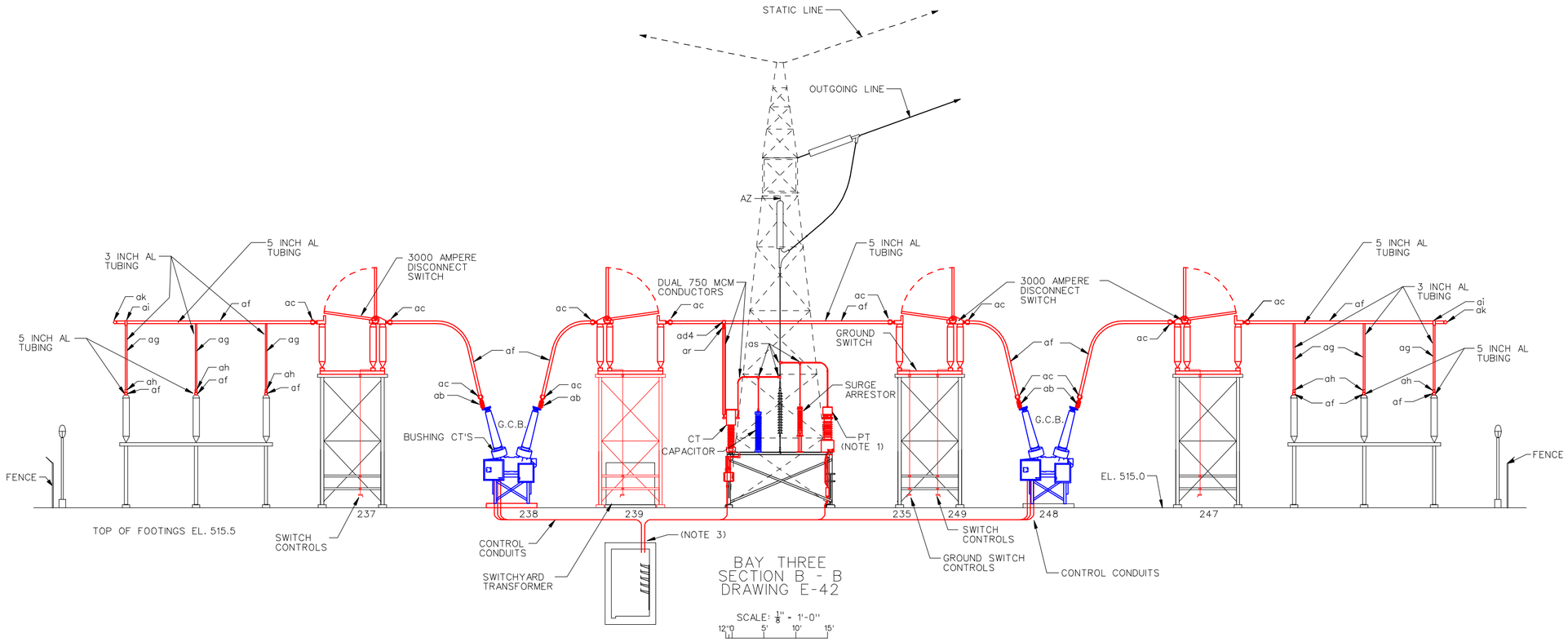

BAY THREE
SECTION B - B
DRAWING E-42

SCALE: 1/8" = 1'-0"
12"0 5' 10' 15'

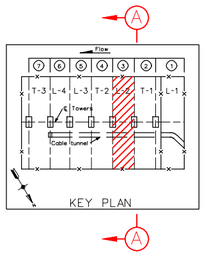

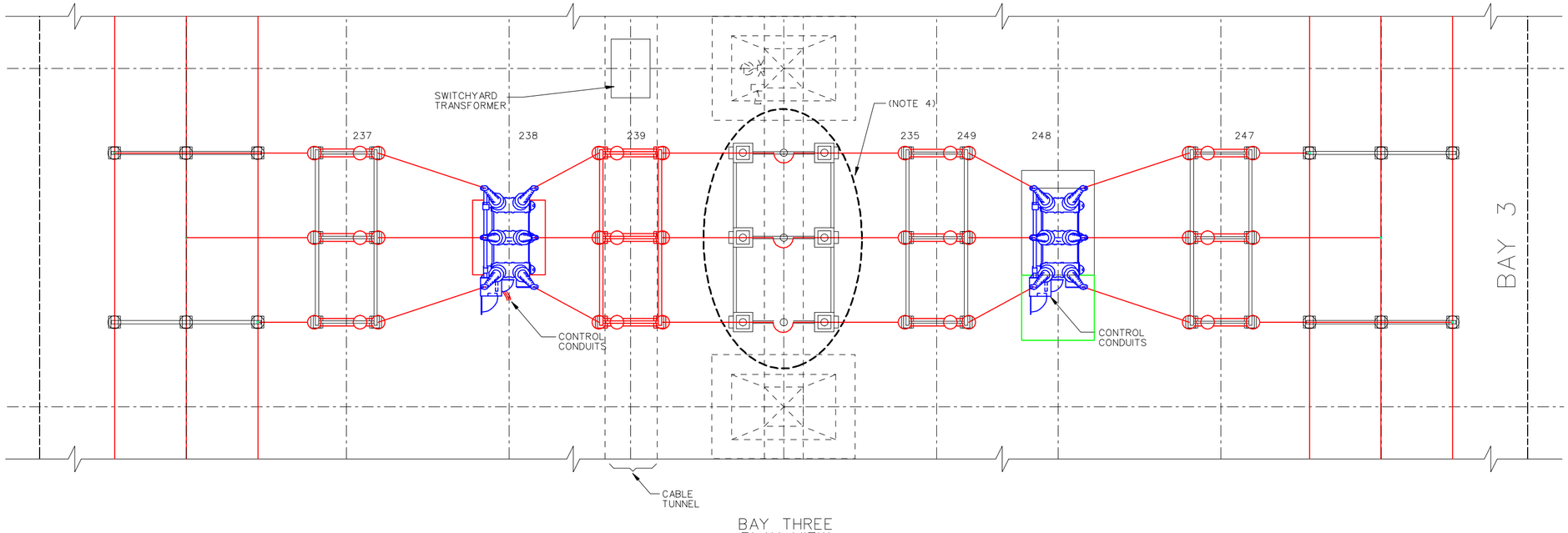

BAY THREE
PLAN VIEW

SCALE: 1/8" = 1'-0"
12"0 5' 10' 15'

LEGEND:

- (GREEN LINE) EQUIPMENT WITH ITEMS TO BE REMOVED, REPLACED, OR DISPOSED OF BY CONTRACTOR
- (RED LINE) EQUIPMENT WITH ITEMS FURNISHED AND/OR INSTALLED BY CONTRACTOR
- (BLUE LINE) GOVERNMENT FURNISHED EQUIPMENT INSTALLED BY THE CONTRACTOR UNDER THIS CONTRACT.
- (BLACK LINE) EXISTING FEATURE

NOTES:

1. PT'S INSTALLED PHASES A, B, AND C. SEE DRAWING E-52 FOR DETAILS.
2. FOR BUS FITTINGS AND PIECES SEE MATERIALS LIST DRAWING E-55.
3. EXISTING CONDUITS BETWEEN TUNNEL AND EXISTING OCB'S SHALL BE REMOVED AND NEW CONDUITS ROUTED BETWEEN GCB'S AND TUNNEL. EXISTING CONDUITS SHALL BE DRILLED OUT OF TUNNEL ROOF, NEW CONDUITS INSTALLED AND SEALED WITH POR-CRAX HP AS PER DETAIL DRAWING E-54.
4. EQUIPMENT NOT SHOWN, WORK WITH DRAWING E-52.

SYMBOL	ZONE	DESCRIPTION	DATE	BY

REVISIONS

HYDROELECTRIC DESIGN CENTER
PORTLAND, OR

U.S. ARMY ENGINEER DISTRICT
CORPS OF ENGINEERS
SAVANNAH, GEORGIA

HARTWELL MAJOR REHABILITATION - PHASE 2
HARTWELL DAM AND LAKE
SWITCHYARD UPGRADE
SWITCHYARD BAY 3
NEW EQUIPMENT
SAVANNAH RIVER GEORGIA AND S. CAROLINA

SIZE	SOLICITATION NO.	FILE NO.	PLATE
F	DACW21-03-B-0007	HAR0157	E-47

SCALE: SHEET 63

23-Feb-2003
BG&SH

HAP103TB.DGN HAP103E47.DGN

...\Har0157\03B07w\HAP103E47.dgn 03/24/2003 11:30:57 AM

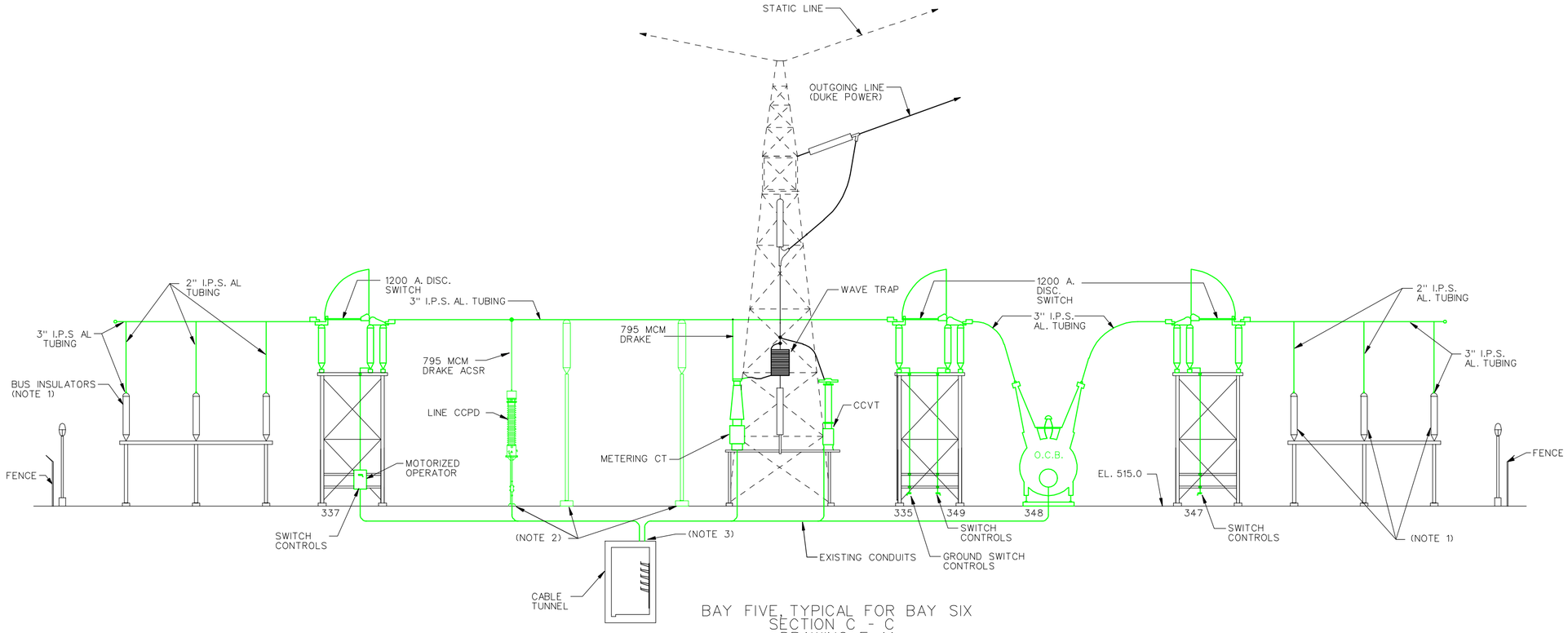

BAY FIVE, TYPICAL FOR BAY SIX
SECTION C - C
DRAWING E-41

SCALE: 1/8" = 1'-0"

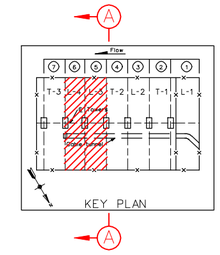

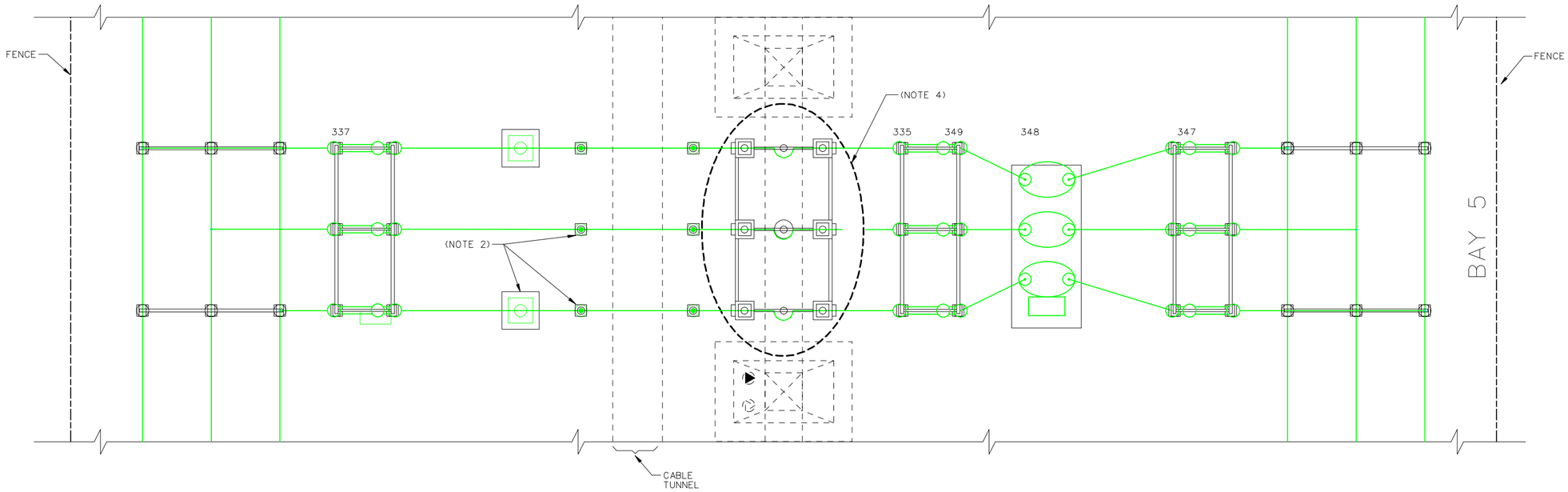

BAY FIVE, TYPICAL FOR BAY SIX
PLAN VIEW

SCALE: 1/8" = 1'-0"

LEGEND:

- (GREEN LINE) EQUIPMENT WITH ITEMS TO BE REMOVED, REPLACED, OR DISPOSED OF BY CONTRACTOR
- (RED LINE) EQUIPMENT WITH ITEMS FURNISHED AND/OR INSTALLED BY CONTRACTOR
- (BLUE LINE) GOVERNMENT FURNISHED EQUIPMENT INSTALLED THIS CONTRACT.
- (BLACK LINE) EXISTING FEATURE

NOTES:

1. EXISTING BUS INSULATORS SHALL BE CLEANED AND TESTED AS PER SECTION 16050 AND REUSED.
2. EXISTING CONCRETE FOOTINGS SHALL BE REMOVED WITH STRUCTURES AND SUPPORTS.
3. EXISTING CONDUITS BETWEEN TUNNEL AND EXISTING EQUIPMENT SHALL BE REMOVED AND NEW CONDUITS INSTALLED BETWEEN EQUIPMENT AND TUNNEL. EXISTING CONDUITS SHALL BE DRILLED OUT OF TUNNEL ROOF, NEW CONDUITS INSTALLED AND SEALED PER DETAIL DRAWING E-54
4. EQUIPMENT NOT SHOWN, WORK WITH E-53.

SYMBOL	ZONE	DESCRIPTION	DATE	BY

REVISIONS

HYDROELECTRIC DESIGN CENTER
PORTLAND, OR

U.S. ARMY ENGINEER DISTRICT
CORPS OF ENGINEERS
SAVANNAH, GEORGIA

HARTWELL MAJOR REHABILITATION - PHASE 2
HARTWELL DAM AND LAKE
SWITCHYARD UPGRADE

SWITCHYARD BAYS 5 AND 6
EQUIPMENT REMOVAL

SAVANNAH RIVER GEORGIA AND S. CAROLINA

SIZE	SOLICITATION NO.	FILE NO.	PLATE
F	DACW21-03-B-0007	HAR0157	E-48

SCALE: SHEET 64

25 Feb 2003
15:14:24

HAP103TB.DGN HAP103E48.DGN

...\Har0157\03B07w\HAP103E48.dgn 03/24/2003 11:31:30 AM

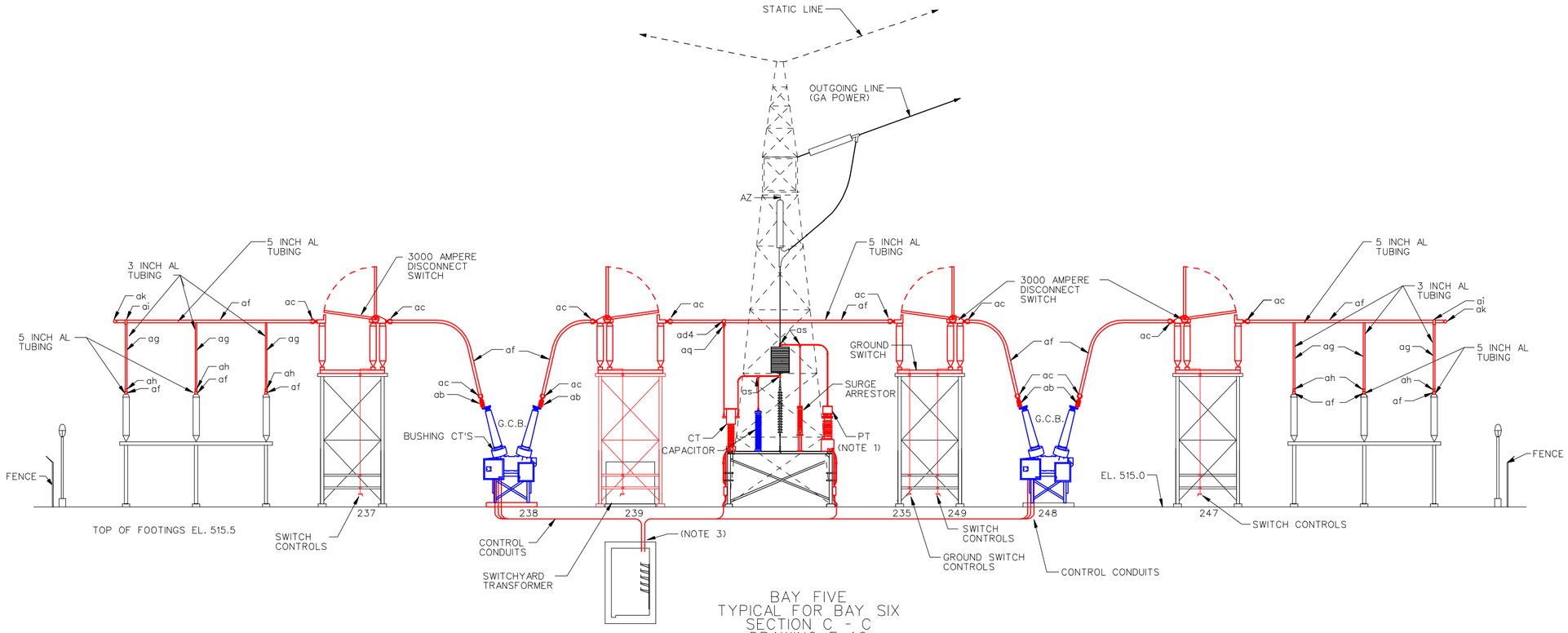

BAY FIVE
TYPICAL FOR BAY SIX
SECTION C - C
DRAWING E-42
SCALE: 1/8" = 1'-0"
12"0 5' 10' 15'

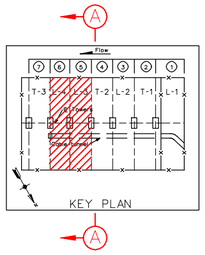

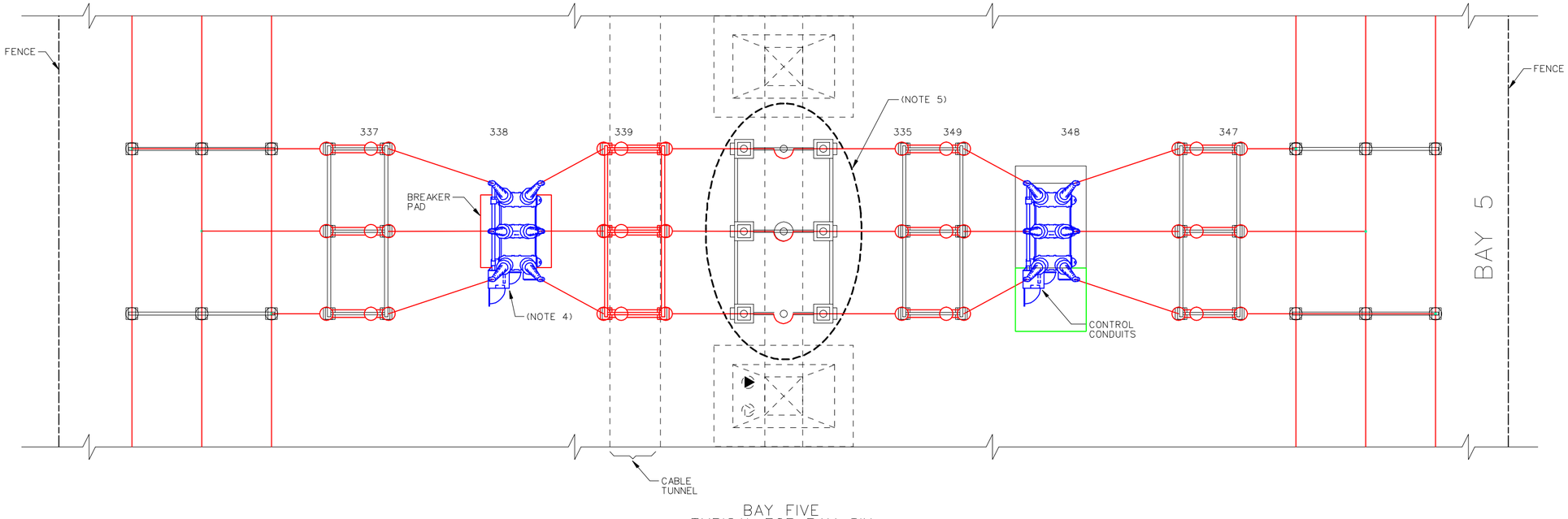

BAY FIVE
TYPICAL FOR BAY SIX
PLAN VIEW
SCALE: 1/8" = 1'-0"
12"0 5' 10' 15'

LEGEND:

- (GREEN LINE) EQUIPMENT WITH ITEMS TO BE REMOVED, REPLACED, OR DISPOSED OF BY CONTRACTOR
- (RED LINE) EQUIPMENT WITH ITEMS FURNISHED AND/OR INSTALLED BY CONTRACTOR
- (BLUE LINE) GOVERNMENT FURNISHED EQUIPMENT INSTALLED BY THE CONTRACTOR UNDER THIS CONTRACT.
- (BLACK LINE) EXISTING FEATURE

NOTES:

1. PT'S INSTALLED PHASES A AND C. CCVT INSTALLED PHASE B. SEE DRAWING E-53 FOR DETAILS.
2. FOR BUS FITTINGS AND PIECES SEE MATERIALS LIST DRAWING E-55.
3. CONDUITS BETWEEN TUNNEL AND NEW GCB'S SHALL BE ROUTED BETWEEN GCB'S AND TUNNEL. EXISTING CONDUITS SHALL BE DRILLED OUT OF TUNNEL ROOF, NEW CONDUITS INSTALLED AND SEALED PER DETAIL DRAWING E-54.
4. SEE DETAIL DRAWING E-54 FOR PROPOSED CONDUIT ROUTING TO NEW GCB CONTROL BOX.
5. EQUIPMENT NOT SHOWN, WORK WITH E-53.

SYMBOL	ZONE	DESCRIPTION	DATE	BY
		REVISIONS		

HYDROELECTRIC DESIGN CENTER
PORTLAND, OR

U.S. ARMY ENGINEER DISTRICT
CORPS OF ENGINEERS
SAVANNAH, GEORGIA

HARTWELL MAJOR REHABILITATION - PHASE 2
HARTWELL DAM AND LAKE
SWITCHYARD UPGRADE
SWITCHYARD BAYS FIVE AND SIX
NEW EQUIPMENT
SAVANNAH RIVER GEORGIA AND S. CAROLINA

SIZE	SOLICITATION NO.	FILE NO.	PLATE
F	DACW21-03-B-0007	HAR0157	E-49

SCALE: SHEET 65

25-Feb-2003
15:14:03

HAP103TB.DGN HAP103E49.DGN

...\Har0157\03B07w\HAP103E49.dgn 03/24/2003 11:31:59 AM

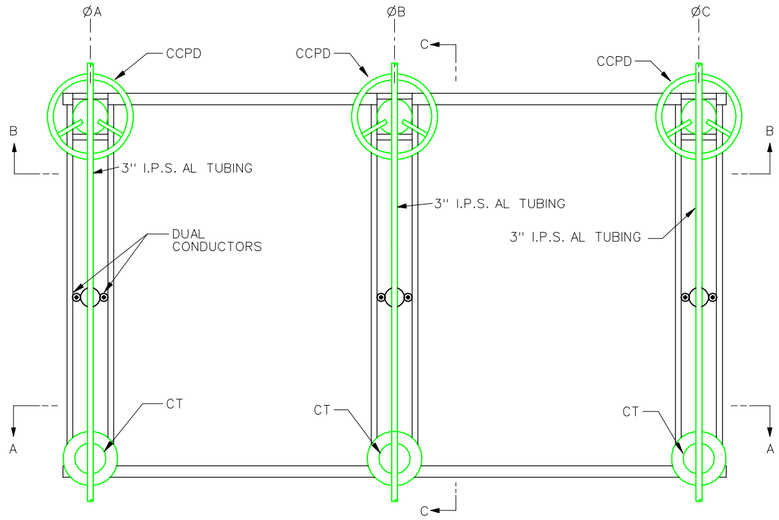

PLAN - COUPLING CAPACITOR POTENTIAL DEVICES AND CURRENT TRANSFORMERS

NTS

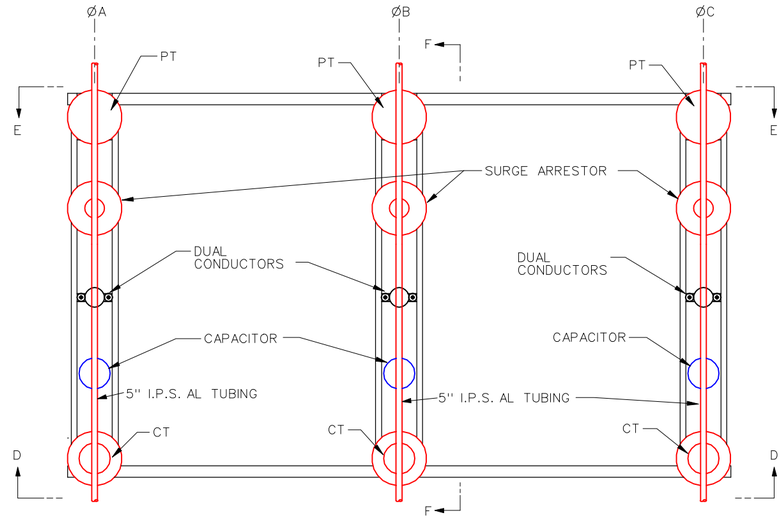

PLAN - POTENTIAL TRANSFORMERS AND CURRENT TRANSFORMERS

NTS

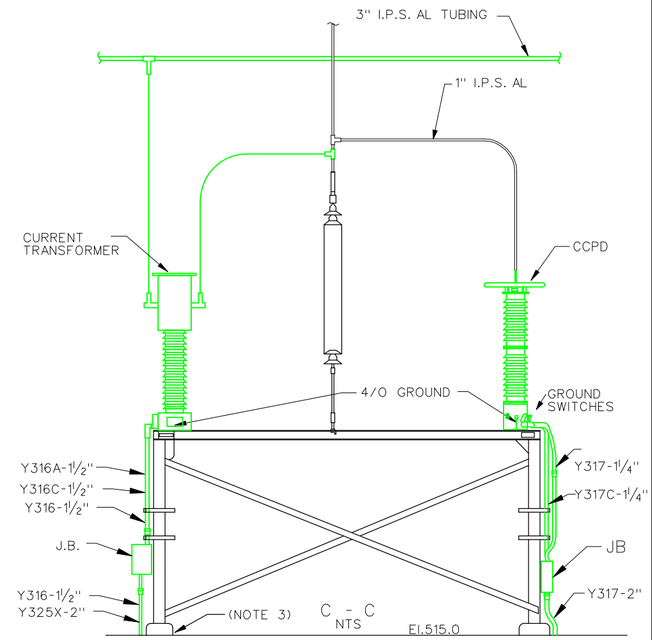

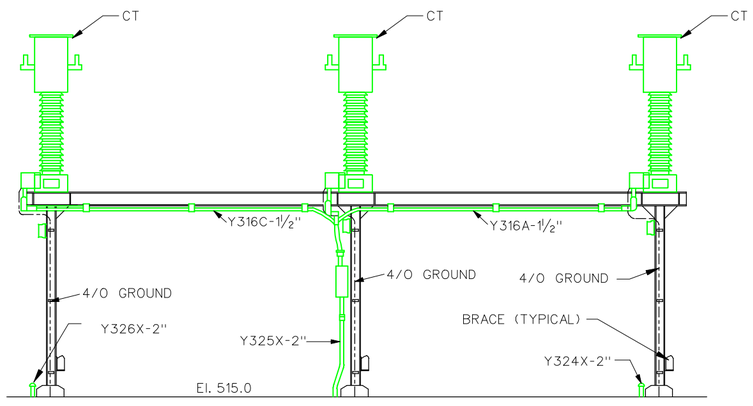

A - A

NTS

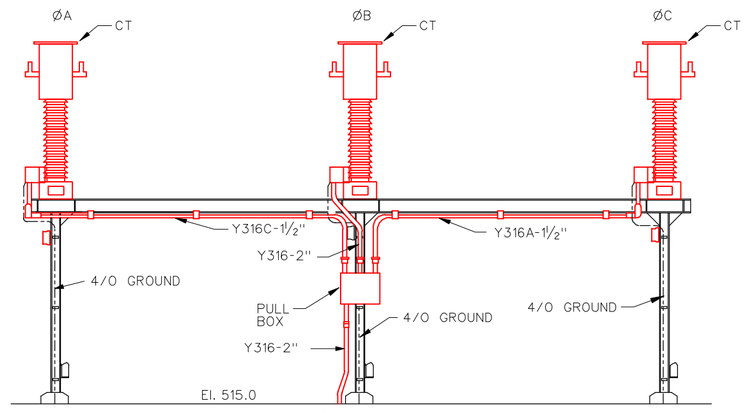

D - D

NTS

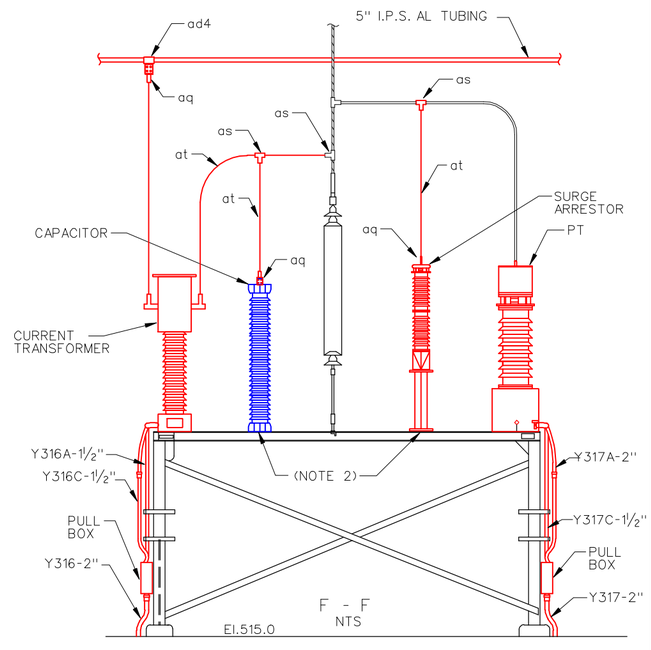

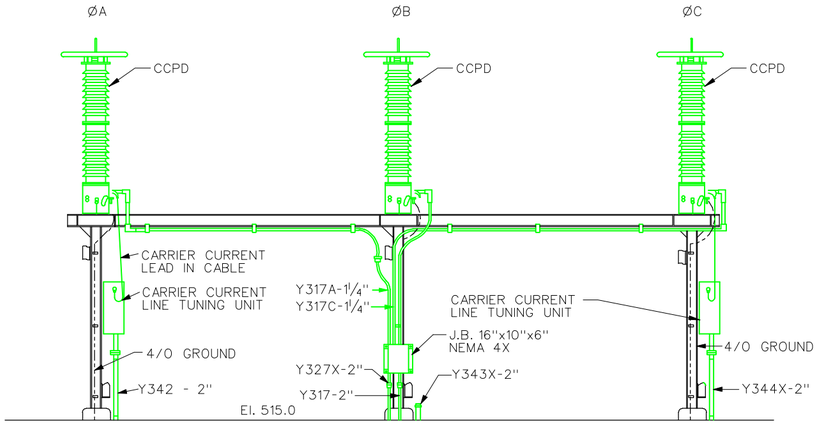

B - B

NTS

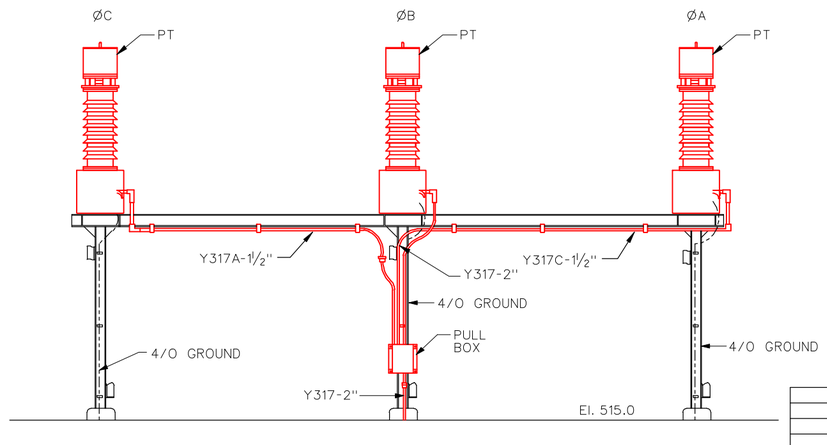

E - E

NTS

NOTES:

1. EXISTING CONDUITS AND PULL BOXES SHALL BE REPLACED AS PER SECTION 16050.
2. CONTRACTOR SHALL VERIFY MOUNTING WITH EQUIPMENT BEING SUPPLIED TO SECURE TO EXISTING STRUCTURE.
3. ALL CONNECTIONS TO GROUND SHALL BE VERIFIED BY THE COR AND REPLACED AS NECESSARY.
4. SEE BILL OF MATERIALS DRAWING E-55.

SYMBOL	ZONE	DESCRIPTION	DATE	BY

REVISIONS

HYDROELECTRIC DESIGN CENTER
PORTLAND, OR

U.S. ARMY ENGINEER DISTRICT
CORPS OF ENGINEERS
SAVANNAH, GEORGIA

HARTWELL MAJOR REHABILITATION - PHASE 2
HARTWELL DAM AND LAKE
SWITCHYARD UPGRADE
BAY 3, LINE 2
EXISTING AND NEW EQUIPMENT
SAVANNAH RIVER GEORGIA AND S. CAROLINA

SIZE	SOLICITATION NO.	FILE NO.	PLATE
F	DACW21-03-B-0007	HAR0157	E-52

SCALE: | SHEET 68

25 Feb 2003
15:46:06

HAP103TB.DGN HAP103E52.DGN

...\Har0157\03B07w\HAP103E52.dgn 03/24/2003 11:33:26 AM

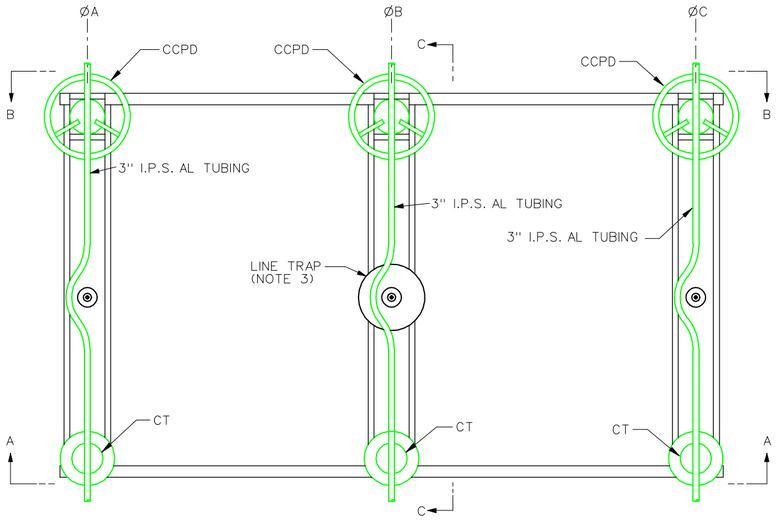

PLAN - COUPLING CAPACITOR POTENTIAL DEVICES AND CURRENT TRANSFORMERS

NTS

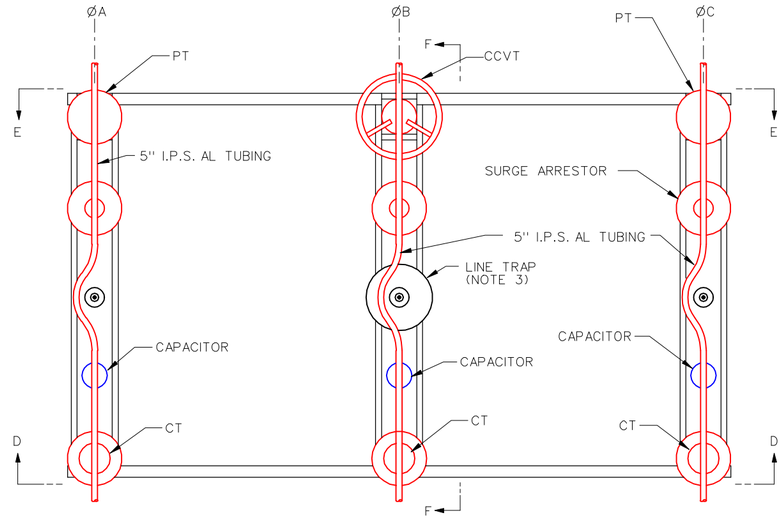

PLAN - COUPLING CAPACITOR POTENTIAL DEVICES AND CURRENT TRANSFORMERS

NTS

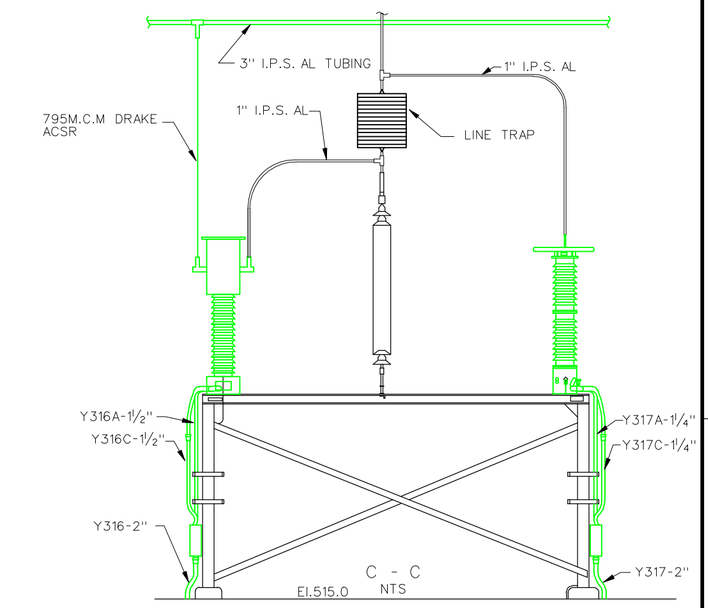

C - C

NTS

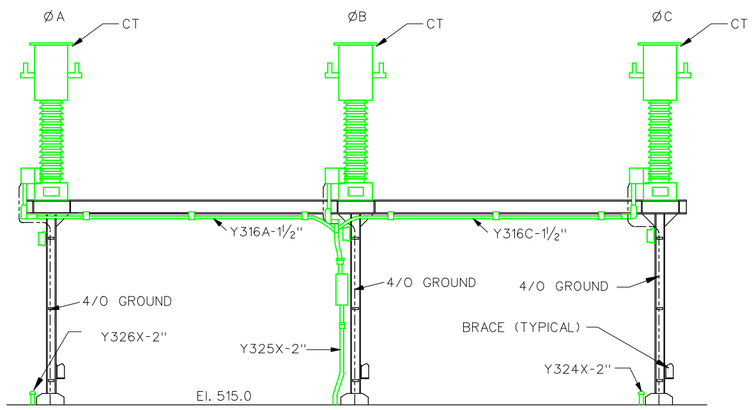

A - A

NTS

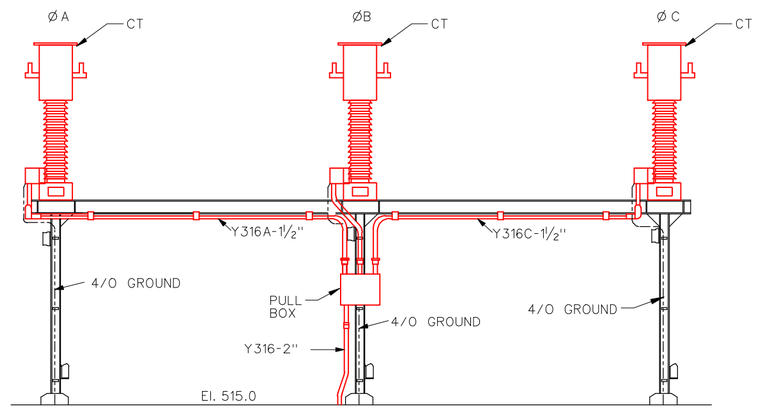

D - D

NTS

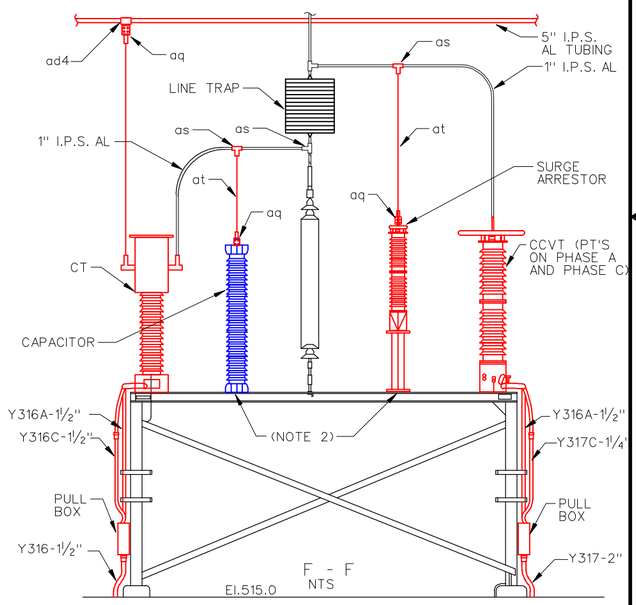

F - F

NTS

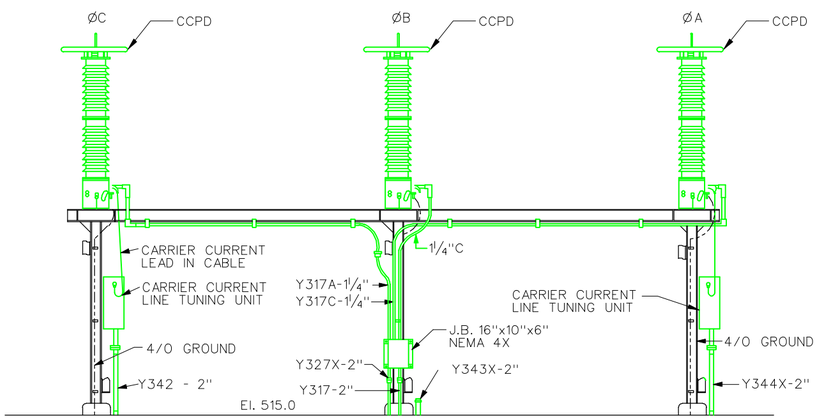

B - B

NTS

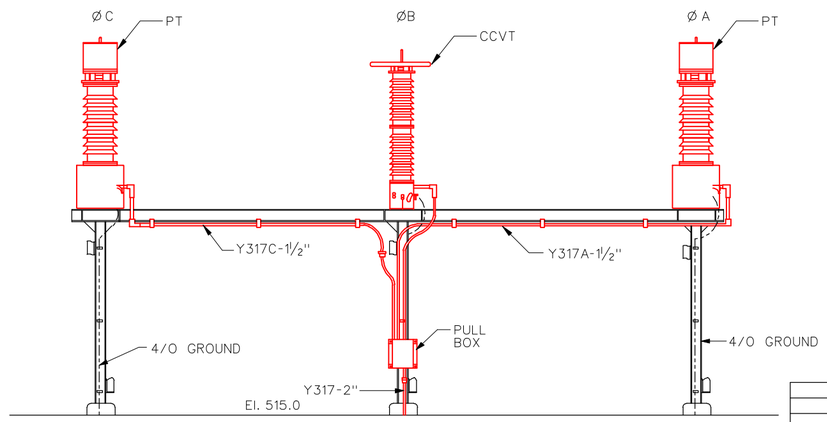

E - E

NTS

NOTES:

1. EXISTING CONDUITS AND PULL BOXES SHALL BE REPLACED AS PER SECTION 16050.
2. CONTRACTOR SHALL VERIFY MOUNTING WITH EQUIPMENT BEING SUPPLIED TO SECURE TO EXISTING STRUCTURE.
3. EXISTING LINE TRAP SHALL NOT BE REPLACED.
4. ALL CONNECTIONS TO GROUND SHALL BE VERIFIED BY THE COR AND REPLACED AS NECESSARY.
5. CONDUIT NUMBERS FOR BAY 5 AND BAY 6 ARE SIMILAR, SEE CONDUIT SCHEDULE.
6. SEE BILL OF MATERIALS DRAWING E-55.

SYMBOL	ZONE	DESCRIPTION	DATE	BY

REVISIONS

HYDROELECTRIC DESIGN CENTER
PORTLAND, OR

U.S. ARMY ENGINEER DISTRICT
CORPS OF ENGINEERS
SAVANNAH, GEORGIA

HARTWELL MAJOR REHABILITATION - PHASE 2
HARTWELL DAM AND LAKE
SWITCHYARD UPGRADE
BAYS 5 AND 6, LINES 3 AND 4
EXISTING AND NEW EQUIPMENT
SAVANNAH RIVER GEORGIA AND S. CAROLINA

SIZE	SOLICITATION NO.	FILE NO.	PLATE
F	DACW21-03-B-0007	HAR0157	E-53

SCALE: | SHEET 69

25 Feb 2003
15:17:00

HAP103TB.DGN HAP103E53.DGN

...\Har0157\03B07w\HAP103E53.dgn 03/24/2003 11:34:49 AM

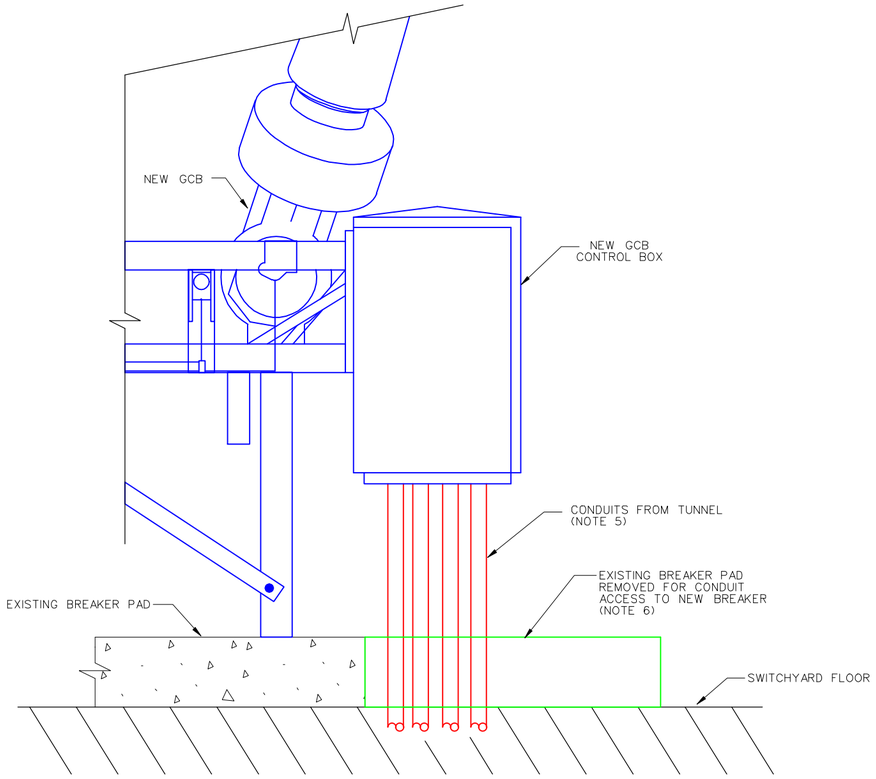

NEW GCB CONDUIT ROUTING
USING EXISTING BREAKER PAD

NTS

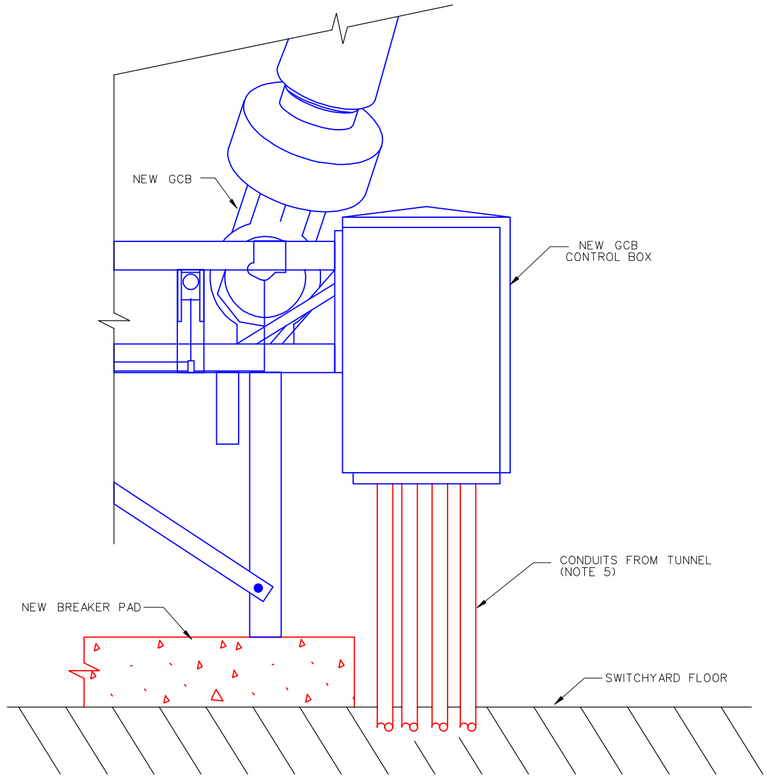

NEW GCB CONDUIT ROUTING
USING NEW BREAKER PAD

NTS

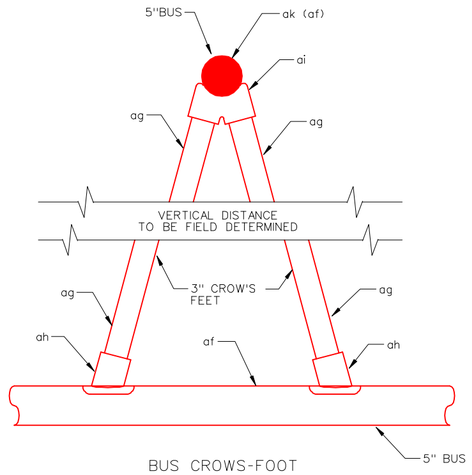

BUS CROWS-FOOT

NTS

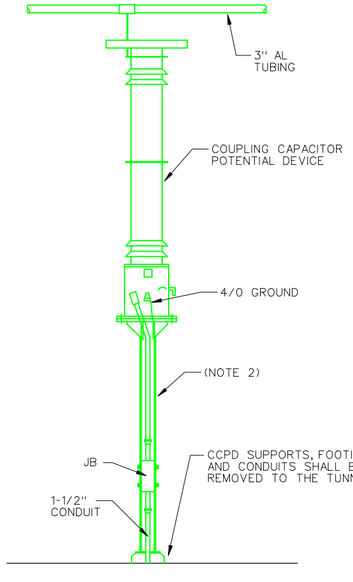

MAIN BUS COUPLING CAPACITOR
POTENTIAL DEVICE

NTS

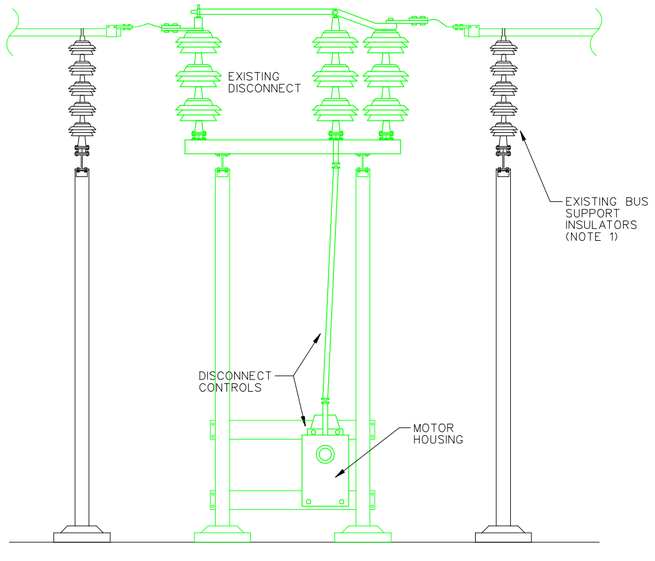

MOD 101 REMOVAL
SEE DRAWING E-41

NTS

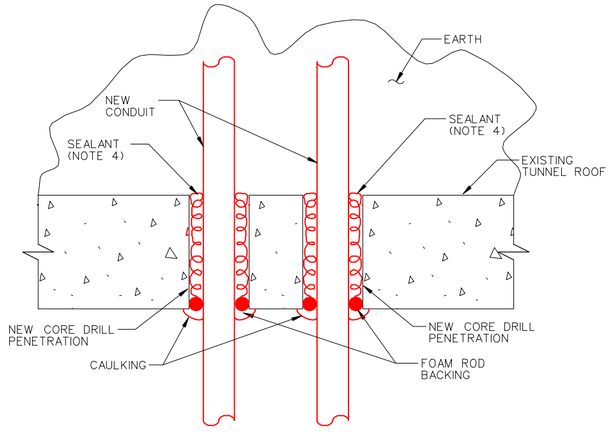

TUNNEL PENETRATIONS

NOTE: THIS IS A SUGGESTED METHOD OF THE CONDUIT/PENETRATION INSTALLATION IN THE TUNNEL ROOF. THE CONTRACTOR MAY SUBMIT OTHER METHODS OF INSTALLATION FOR APPROVAL.

NTS

NOTES:

1. EXISTING BUS SUPPORT INSULATORS SHALL BE CLEANED, AND TESTED AS PER SPECIFICATION SECTION 16050 BEFORE REUSE.
2. EXISTING CCPD SUPPORT STRUCTURES MAY BE REUSED BUT NEW FOOTINGS SHALL BE INSTALLED AT NEW CCPD LOCATION. SUPPORT STRUCTURE MAY REQUIRE SHORTENING TO FIT CCPD UNDER BUS.
3. HEIGHT OF PULL BOX ABOVE BREAKER PAD AND SWITCHYARD FLOOR SHALL BE DETERMINED BY THE CONTRACOTR TO ALLOW EASE OF CONDUIT INSTALLATION.
4. SEALANT SHALL BE A WEATHER, MOISTURE, CHEMICAL RESISTANT SUBSTANCE SUITABLE FOR SEALING EMBEDDED CONCRETE PENETRATIONS. "REVERE X-JT SEAL AND F-126 JOINT FILLER" ARE SUITABLE SEALANT MATERIALS. CONTRACTOR SHALL SUBMIT FOR APPROVAL.
5. REFER TO CONDUIT AND CABLE SCHEDULES FOR REQUIRED CONDUITS TO NEW GCB'S.
6. CONTRACTOR SHALL REMOVE END OF EXISTING BREAKER PADS TO ALLOW ACCESS TO CONTROL BOX BY CONDUITS BELOW. SUFFICIENT CONCRETE SHALL REMAIN FOR BREAKER SUPPORT AS WITH NEW CONCRETE PADS.

SYMBOL	ZONE	DESCRIPTION	DATE	BY

REVISIONS

HYDROELECTRIC DESIGN CENTER
PORTLAND, OR

U.S. ARMY ENGINEER DISTRICT
CORPS OF ENGINEERS
SAVANNAH, GEORGIA

HARTWELL MAJOR REHABILITATION - PHASE 2
HARTWELL DAM AND LAKE
SWITCHYARD UPGRADE
VIEWS AND DETAILS
SHEET 1
SAVANNAH RIVER GEORGIA AND S. CAROLINA

SIZE	SOLICITATION NO.	FILE NO.	PLATE
F	DACW21-03-B-0007	HAR0157	E-54

SCALE: SHEET 70

25 Feb 2003
BA/PSD

HAP103TB.DGN HAP103E54.DGN

...\Har0157\03B07w\HAP103E54.DGN 03/24/2003 11:35:22 AM

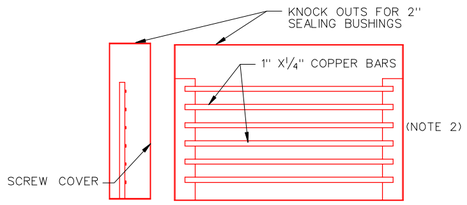

DETAIL - A
C.T. BUS DIFFIFFERENTIAL
EXISTING BOX Y-4 AND NEW Y-5

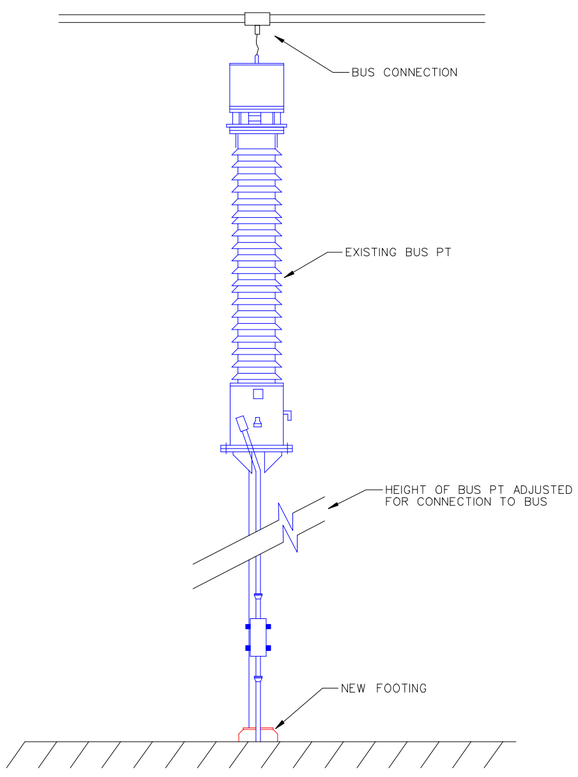

SWITCHYARD BUS PT

(NOTE 3)

ITEM NO.	DESCRIPTION	MANUFACTURER	PART NO.	
aa	LIGHTNING ARRESTOR DOBLE TEST TERMINAL; 4-HOLE TO	LAPP	B64033-70	
ab	DOBLE TEST TERMINAL, BUSHING; 4-HOLE TO 4-HOLE,	LAPP	B-63037	
ac	TERMINAL CONNECTOR, WELD-ON, 4-HOLE TO END OF 5 INCH	SEFCOR	WFT-67-4B	
ad4	WELD-ON TEE CONNECTOR; 4-HOLE TO 5 INCH TUBE	SEFCOR	WTF-6269-4B	
ad2	WELD-ON TEE CONNECTOR; 2-HOLE TO 5 INCH TUBE	SEFCOR	WTF-6269-2B	
ae	BUS SUPPORT, SLIP, 5 INCH	SEFCOR	WTSI-67-5	
af	5 INCH AL TUBING			
ag	3 INCH AL TUBING			
ah	ANGLE WELDMENT, 15 DEGREE; BOTTOM OF CROW'S FOOT	SEFCOR	WFTT15-6762	
ai	ANGLE WELDMENT, 15 DEGREE; TOP OF CROW'S FOOT	SEFCOR	WFVT15-6762	
aj	WELDMENT EXPANSION SOUPLER; 5 INCH TUBING	SEFCOR	WXCF-6767	
ak	WELDED INTERNAL FIT CORONA BELL	SEFCOR	ABIR-67	
al	TEE, CABLE TO FLAT, 2-HOLE	SEFCOR	ACF-34-2B	
am	TEE, CABLE TO FLAT, 4-HOLE	SEFCOR	ACF-34-4B	
an	TEE WELDMENT, 5 INCH MAIN TO 3 INCH TAP	SEFCOR	WFTT-6762	
ao	HORIZONTAL BUS SUPPORT WELDMENT, WELD TO MAIN BUS	SEFCOR	WCTI-67-5	
ap	TERMINAL CONNECTOR, WELD-ON, 3 INCH TUBE TO 2-HOLE PAD; WELD TO END OF 3 INCH TUBE	SEFCOR	WFT-62-2B	
aq	TERMINAL, CABLE TO 4-HOLE	SEFCOR	AFN-34-4B	
ar	TERMINAL, 2-CABLE TO 4-HOLE FLAT PAD	SEFCOR	AFNC2-34-4B	
as	TEE, CABLE TO CABLE,	SEFCOR	ACRCT-3434	
at	750 AWG AL CABLE			

SWITCHYARD BUS AND FITTINGS
BILL OF MATERIALS

(NOTE 1)

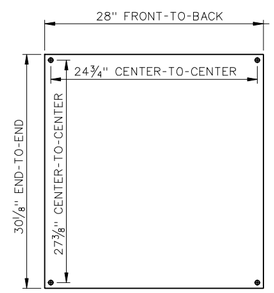

LINE NO. 4 PT BASE LAYOUT
SQUARE-D PT'S

NTS

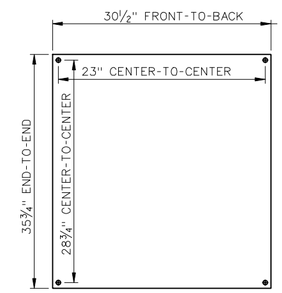

LINE NO. 2 AND 3 PT BASE LAYOUT
ABB PT'S

NTS

NOTES:

1. ITEMS IN BILL OF MATERIALS ARE A SUGGESTED FITTING OR PIECE OF EQUIPMENT THAT WILL WORK FOR THIS APPLICATION. THE CONTRACTOR SHALL SUBMIT FOR APPROVAL ALL EQUIPMENT TO BE INSTALLED UNDER THIS CONTRACT.
2. SEE DRAWING E-56 FOR LOCATION OF CT CONNECTION BOXES IN CABLE TUNNEL.
3. SUPPORTS FOR RELOCATED BUS PT'S MAY REQUIRE ADJUSTMENT TO ALLOW FOR A CLEAN CONNECTION TO THE BUS TUBBING ABOVE.

SYMBOL	ZONE	DESCRIPTION	DATE	BY

REVISIONS

HYDROELECTRIC DESIGN CENTER
PORTLAND, OR

U.S. ARMY ENGINEER DISTRICT
CORPS OF ENGINEERS
SAVANNAH, GEORGIA

HARTWELL MAJOR REHABILITATION - PHASE 2
HARTWELL DAM AND LAKE
SWITCHYARD UPGRADE
VIEWS AND DETAILS
SHEET 2
SAVANNAH RIVER GEORGIA AND S. CAROLINA

SIZE	SOLICITATION NO.	FILE NO.	PLATE
F	DACW21-03-B-0007	HAR0157	E-55

SCALE: SHEET 71

26 Feb 2003
09:20:02

HAP103TB.DGN HAP103E55.DGN

...\Har0157\03B07w\HAP103E55.dgn 03/24/2003 11:36:03 AM

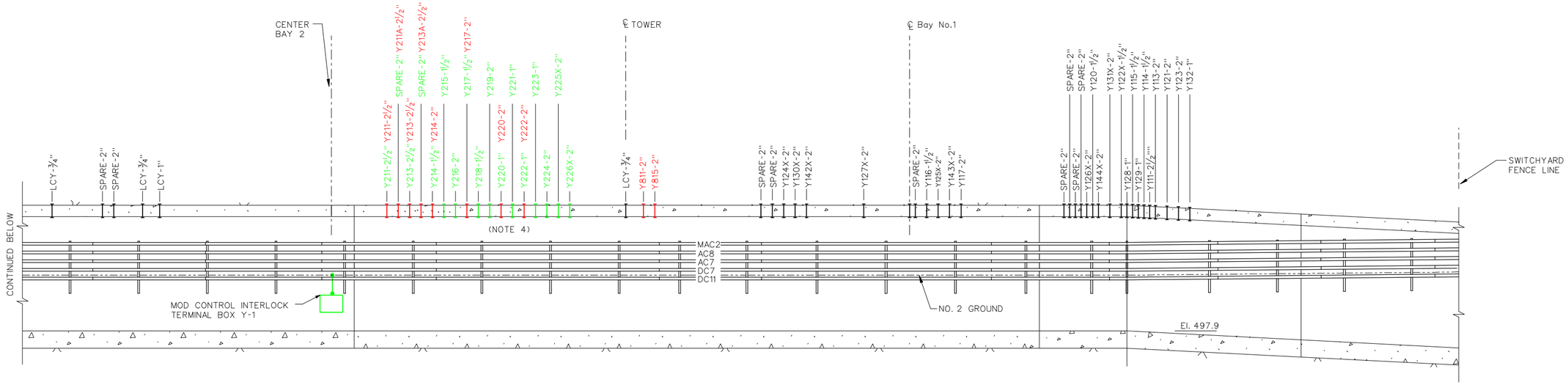

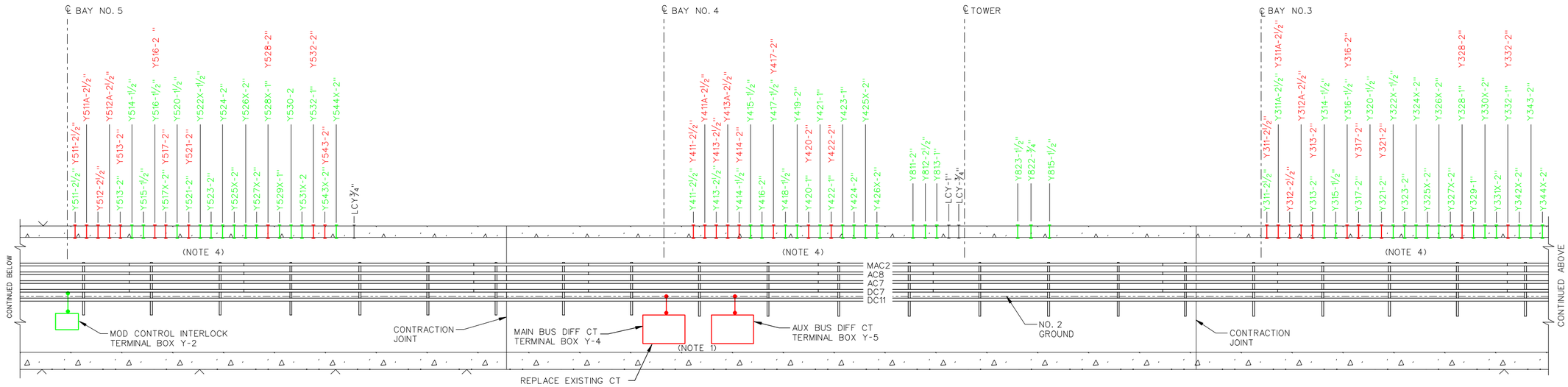

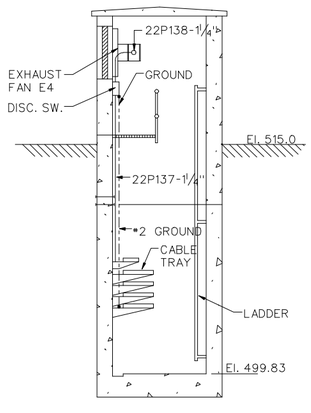

VIEW C - C

SCALE: ¼"=1'-0"

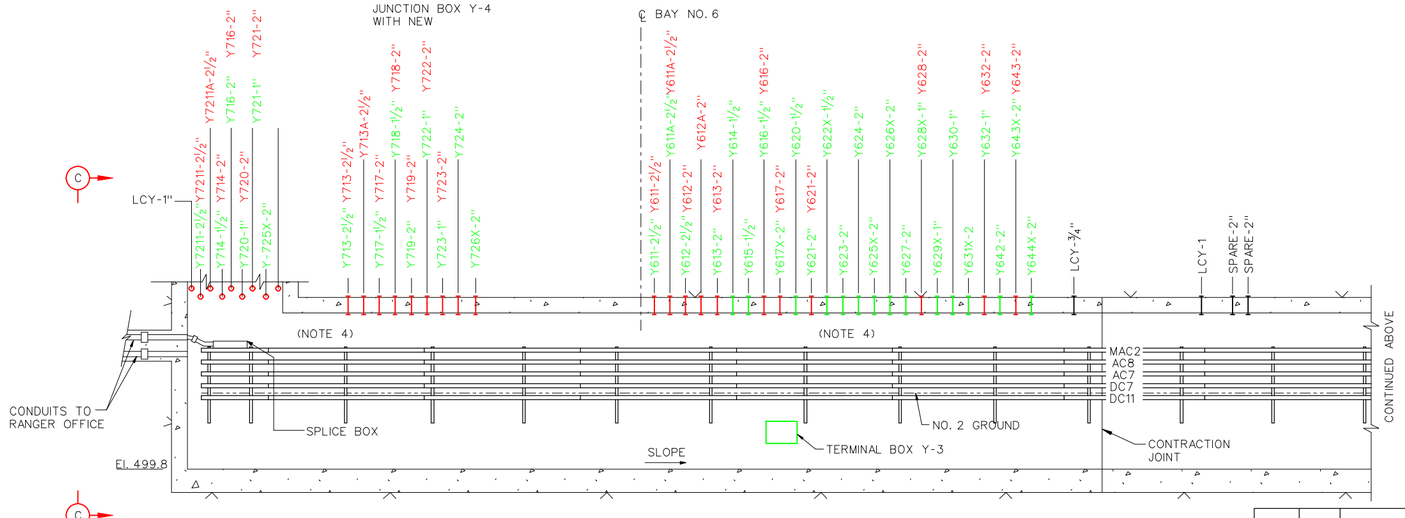

TUNNEL CONDUIT ROUTING

SCALE: 1/4"= 1'-0"

12" 0 5'

NOTES:

1. BOXES SHALL BE CONTRUCTED OF NO. 10 GAUGE GALVANIZED SHEET STEEL AND PROVIDED WITH GASKETS FOR WATER-TITE SEAL. REAR OF BOXES SHALL BE PAINTED WITH TWO COATS OF RUST INHIBITING PAINT.
2. ALL NEW CONDUITS SHALL BE THREADED AND SIZED AS INDICATED ON THE CONDUIT AND CABLE SCHEDULES. STUB OUT 2 INCHES WITH BUSHINGS OR IF UNUSED, CAP CONDUIT.
3. GREEN COLOR INDICATES EQUIPMENT TO BE REMOVED, RED COLOR INDICATES EQUIPMENT INSTALLED UNDER THIS CONTRACT.
4. EXISTING CONDUITS THAT HAVE CABLES REMOVED AND THE CONDUIT NOT REUSED, SHALL BE REMOVED TO THE ROOF OF THE TUNNEL AND SEALED TO PREVENT LEAKING EITHER INSIDE OR OUTSIDE THE CONDUIT.

SYMBOL	ZONE	DESCRIPTION	DATE	BY

REVISIONS

HYDROELECTRIC DESIGN CENTER PORTLAND, OR

U.S. ARMY ENGINEER DISTRICT CORPS OF ENGINEERS SAVANNAH, GEORGIA

HARTWELL MAJOR REHABILITATION - PHASE 2
HARTWELL DAM AND LAKE
SWITCHYARD UPGRADE
SWITCHYARD TUNNEL CONDUIT ROUTING
SAVANNAH RIVER GEORGIA AND S. CAROLINA

SIZE	SOLICITATION NO.	FILE NO.	PLATE
F	DACW21-03-B-0007	HAR0157	E-56

SCALE: SHEET 72

HAP103TB.DGN HAP103E56.DGN

...\Har0157\03B07w\HAP103E56.DGN 03/24/2003 11:36:44 AM

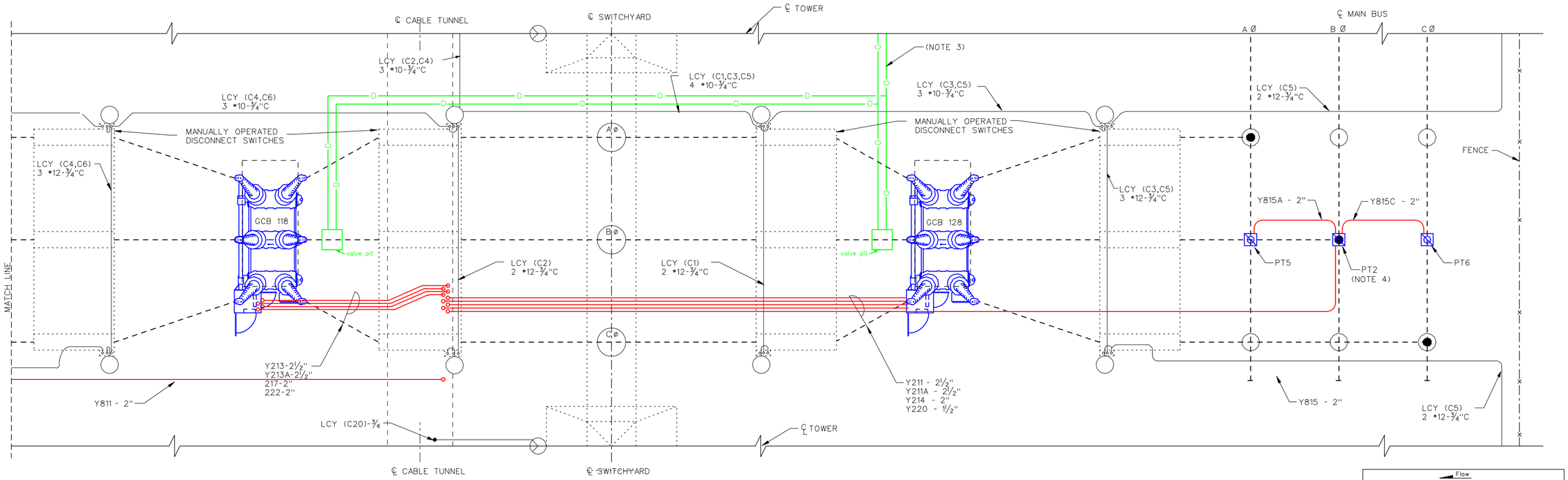

PLAN VIEW
BAY NO.2 - TRANS. NO.1

SCALE: 3/16" = 1'-0"
12"0 5' 10'

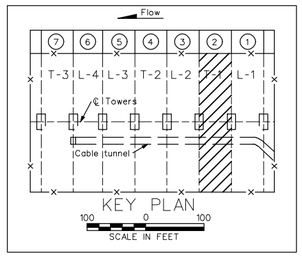

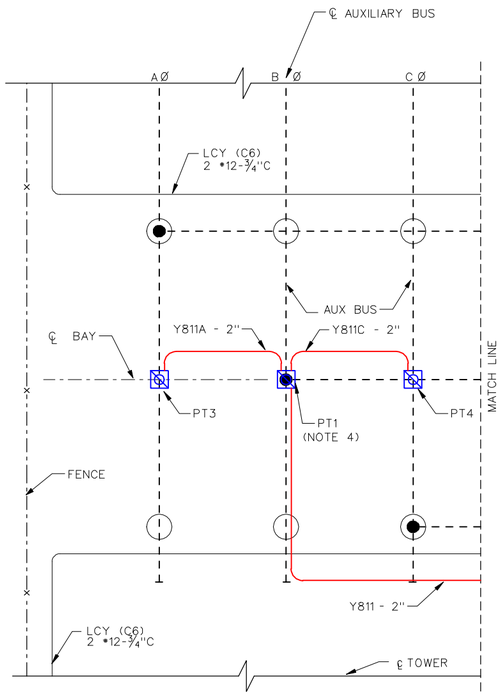

FLOW

NOTES:

1. EXISTING CONDUITS SHALL BE REMOVED AND NEW CONDUITS INSTALLED AS REQUIRED COORDINATION WITH CONDUIT AND CABLE SCHEDULE REQUIRED.
2. EXTREME CAUTION SHALL BE EXERCISED BY THE CONTRACTOR WHILE EXCAVATING EXISTING CONDUITS. LIGHTING AND GROUNDING CONDUCTORS MAY NOT BE WHERE EXISTING DRAWINGS SHOW. ANY DAMAGE CAUSED SHALL BE THE RESPONSIBILITY OF THE CONTRACTOR.
3. EXISTING OCB OIL PIPING SHALL BE REMOVED AS PER THE SPECIFICATIONS SECTION 16050.
4. SEE DRAWING E-41 AND E-42 EXISTING PT'S ARE RELOCATED ON NEW SUPPORTS UNDER THE ENDS OF THE MAIN AND AUXILLIARY BUS.

SYMBOL	ZONE	DESCRIPTION	DATE	BY

REVISIONS

HYDROELECTRIC DESIGN CENTER
PORTLAND, OR

U.S. ARMY ENGINEER DISTRICT
CORPS OF ENGINEERS
SAVANNAH, GEORGIA

HARTWELL MAJOR REHABILITATION - PHASE 2
HARTWELL DAM AND LAKE
SWITCHYARD UPGRADE
BAY 2
CONDUIT ROUTING
SAVANNAH RIVER GEORGIA AND S. CAROLINA

SIZE	SOLICITATION NO.	FILE NO.	PLATE
F	DACW21-03-B-0007	HAR0157	E-57

SCALE: SHEET 73

03 Mar 2003
12:24:07

HAP103TB.DGN HAP103E57.DGN

...\Har0157\03B07w\HAP103E57.DGN 03/24/2003 11:37:29 AM

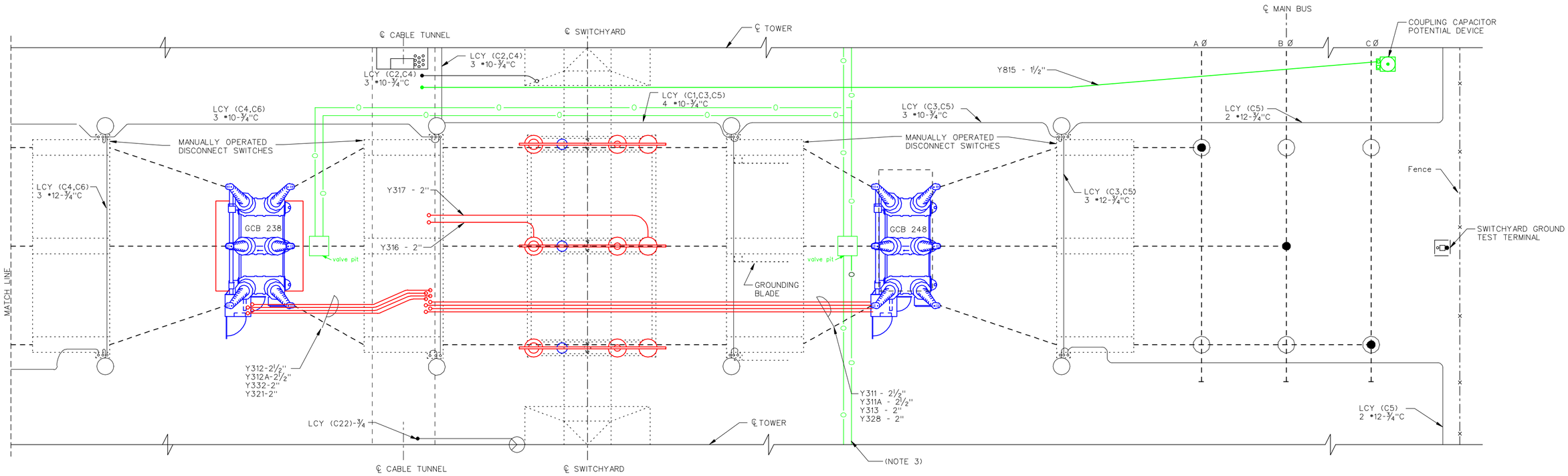

PLAN VIEW
BAY NO.3 - LINE NO.2
(GEORGIA POWER)

SCALE: 3/16" = 1'-0"
12"0 5' 10'

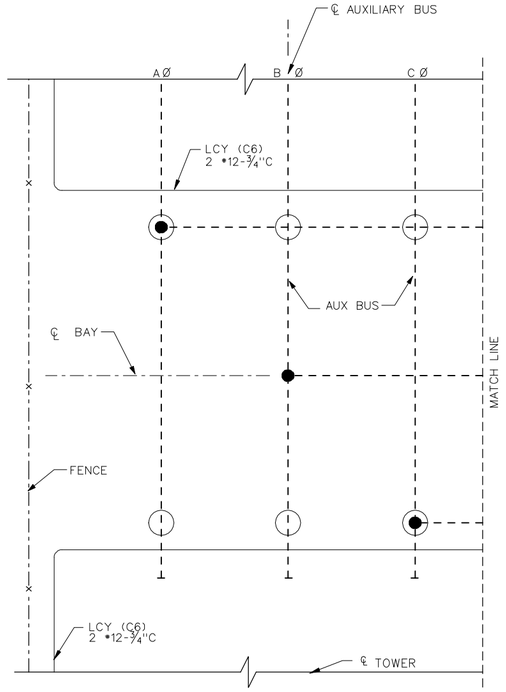

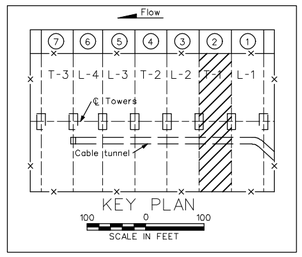

NOTES:

1. EXISTING CONDUITS SHALL BE REMOVED AND NEW CONDUITS INSTALLED AS REQUIRED COORDINATION WITH CONDUIT AND CABLE SCHEDULE REQUIRED.
2. EXTREME CAUTION SHALL BE EXERCISED BY THE CONTRACTOR WHILE EXCAVATING EXISTING CONDUITS. LIGHTING AND GROUNDING CONDUCTORS MAY NOT BE WHERE EXISTING DRAWINGS SHOW. ANY DAMAGE CAUSED SHALL BE THE RESPONSIBILITY OF THE CONTRACTOR.
3. EXISTING OIL PIPING SHALL BE REMOVED AND BECOME THE PROPERTY OF THE CONTRACTOR AS PER SPECIFICATIONS SECTION 16050.

SYMBOL	ZONE	DESCRIPTION	DATE	BY

REVISIONS

HYDROELECTRIC DESIGN CENTER
PORTLAND, OR

U.S. ARMY ENGINEER DISTRICT
CORPS OF ENGINEERS
SAVANNAH, GEORGIA

HARTWELL MAJOR REHABILITATION - PHASE 2
HARTWELL DAM AND LAKE
SWITCHYARD UPGRADE
BAY 3
CONDUIT ROUTING
SAVANNAH RIVER GEORGIA AND S. CAROLINA

SIZE	SOLICITATION NO.	FILE NO.	PLATE
F	DACW21-03-B-0007	HAR0157	E-58

SCALE: SHEET 74

03 MAR 2003
TO.JOB

HAP103TB.DGN HAP103E58.DGN

...\Har0157\03B07w\HAP103E58.dgn 03/24/2003 11:38:06 AM

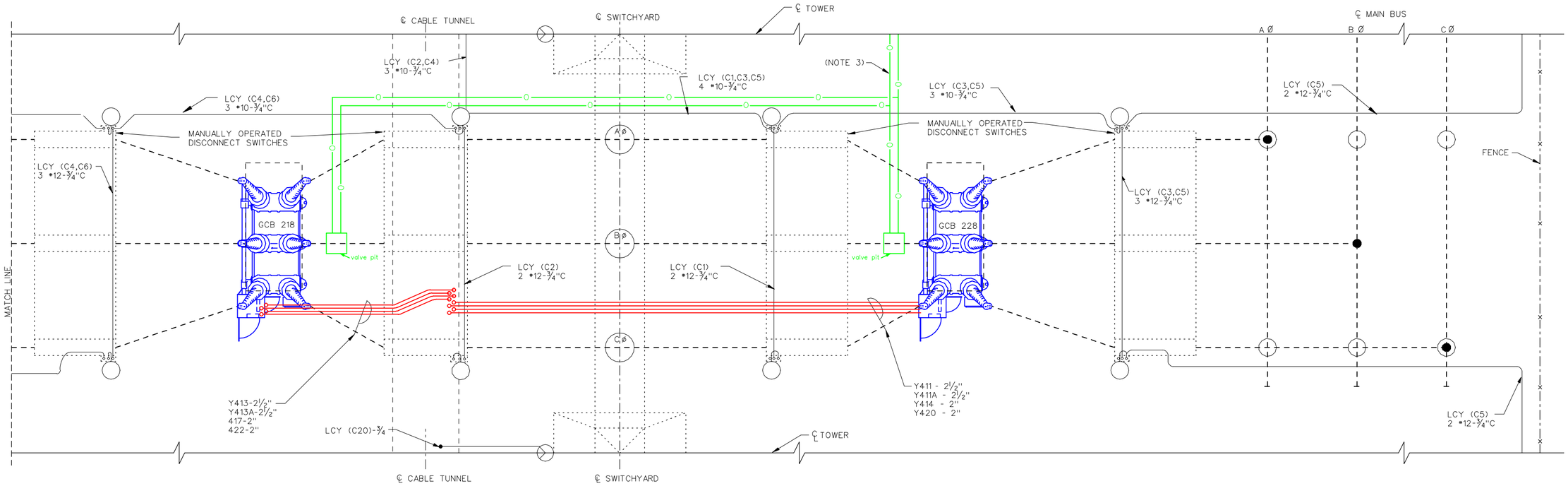

PLAN VIEW
BAY NO.4 - TRANSFORMER NO.2

SCALE: 3/16" = 1'-0"
12"0 6' 10'

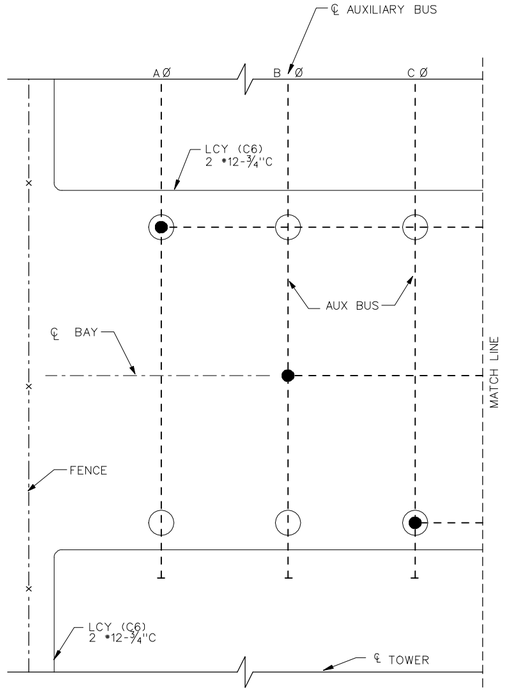

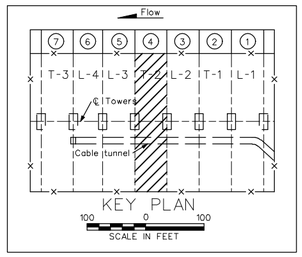

NOTES:

1. EXISTING CONDUITS SHALL BE REMOVED AND NEW CONDUITS INSTALLED AS REQUIRED COORDINATION WITH CONDUIT AND CABLE SCHEDULE REQUIRED.
2. EXTREME CAUTION SHALL BE EXERCISED BY THE CONTRACTOR WHILE EXCAVATING EXISTING CONDUITS. LIGHTING AND GROUNDING CONDUCTORS MAY NOT BE WHERE EXISTING DRAWINGS SHOW. ANY DAMAGE CAUSED SHALL BE THE RESPONSIBILITY OF THE CONTRACTOR.
3. EXISTING OCB OIL PIPING SHALL BE REMOVED AS PER THE SPECIFICATIONS SECTION 16050.

SYMBOL	ZONE	DESCRIPTION	DATE	BY

REVISIONS

HYDROELECTRIC DESIGN CENTER
PORTLAND, OR

U.S. ARMY ENGINEER DISTRICT
CORPS OF ENGINEERS
SAVANNAH, GEORGIA

HARTWELL MAJOR REHABILITATION - PHASE 2
HARTWELL DAM AND LAKE
SWITCHYARD UPGRADE
BAY 4
CONDUIT ROUTING
SAVANNAH RIVER GEORGIA AND S. CAROLINA

SIZE	SOLICITATION NO.	FILE NO.	PLATE
F	DACW21-03-B-0007	HAR0157	E-59

SCALE: SHEET 75

03 Mar 2003
11:15:24

HAP103TB.DGN HAP103E59.DGN

...\Har0157\03B07w\HAP103E59.dgn 03/24/2003 11:39:00 AM

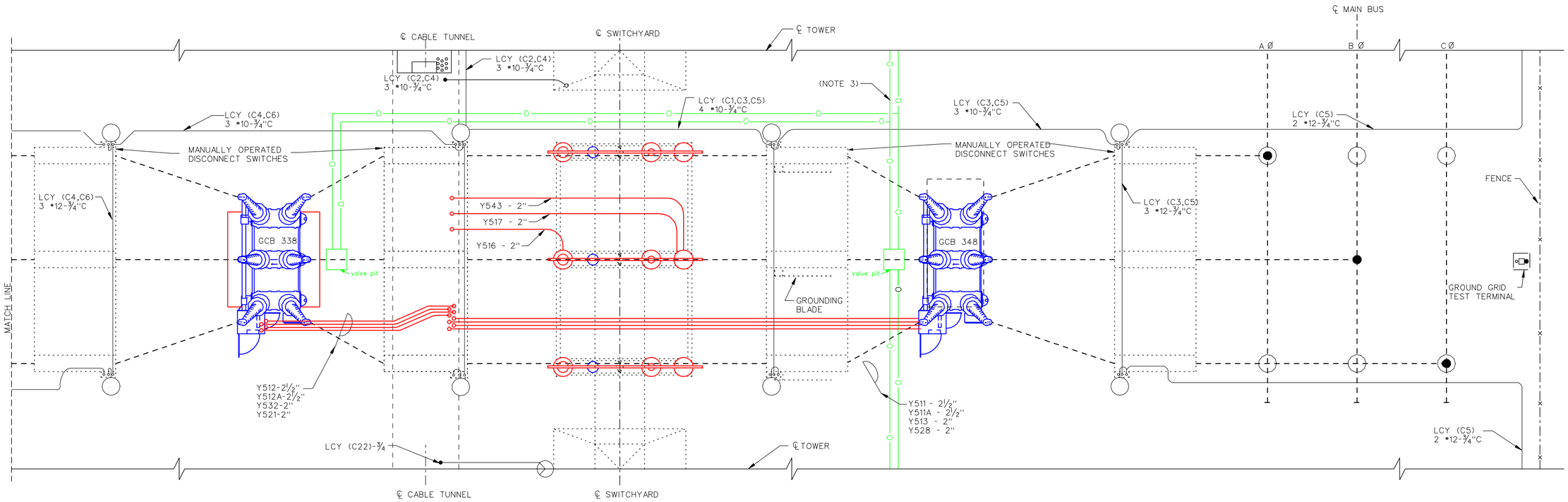

PLAN VIEW
BAY NO.5 - LINE NO.3
(DUKE POWER)

SCALE: 3/16" = 1'-0"
12"0 5' 10'

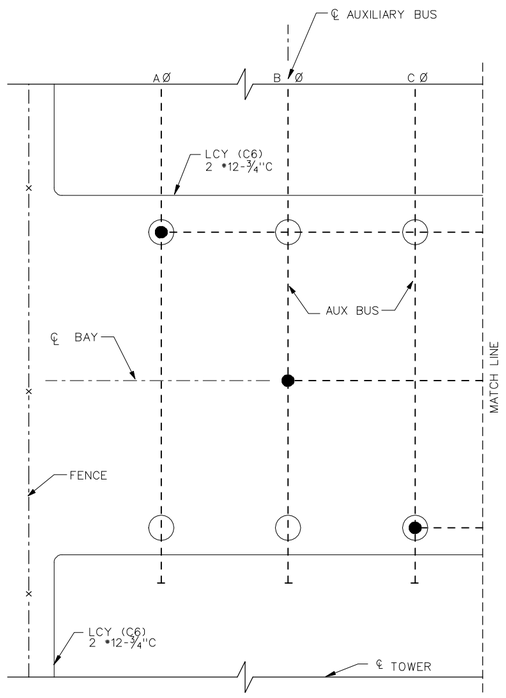

Flow

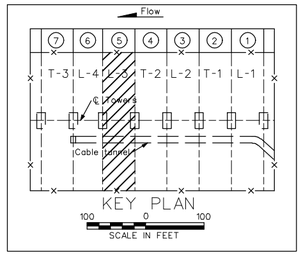

NOTES:

1. EXISTING CONDUITS SHALL BE REMOVED AND NEW CONDUITS INSTALLED AS REQUIRED COORDINATION WITH CONDUIT AND CABLE SCHEDULE REQUIRED.
2. EXTREME CAUTION SHALL BE EXERCISED BY THE CONTRACTOR WHILE EXCAVATING EXISTING CONDUITS. LIGHTING AND GROUNDING CONDUCTORS MAY NOT BE WHERE EXISTING DRAWINGS SHOW. ANY DAMAGE CAUSED SHALL BE THE RESPONSIBILITY OF THE CONTRACTOR.
3. EXISTING OIL PIPING SHALL BE REMOVED AS PER SPECIFICATION SECTION 16050.

SYMBOL	ZONE	DESCRIPTION	DATE	BY

REVISIONS

HYDROELECTRIC DESIGN CENTER
PORTLAND, OR

U.S. ARMY ENGINEER DISTRICT
CORPS OF ENGINEERS
SAVANNAH, GEORGIA

HARTWELL MAJOR REHABILITATION - PHASE 2
HARTWELL DAM AND LAKE
SWITCHYARD UPGRADE
BAY 5
CONDUIT ROUTING
SAVANNAH RIVER GEORGIA AND S. CAROLINA

SIZE	SOLICITATION NO.	FILE NO.	PLATE
F	DACW21-03-B-0007	HAR0157	E-60

SCALE: SHEET 76

03 Mar 2003
19:40

HAP103TB.DGN HAP103E60.DGN

...\Har0157\03B07w\HAP103E60.dgn 03/24/2003 11:39:40 AM

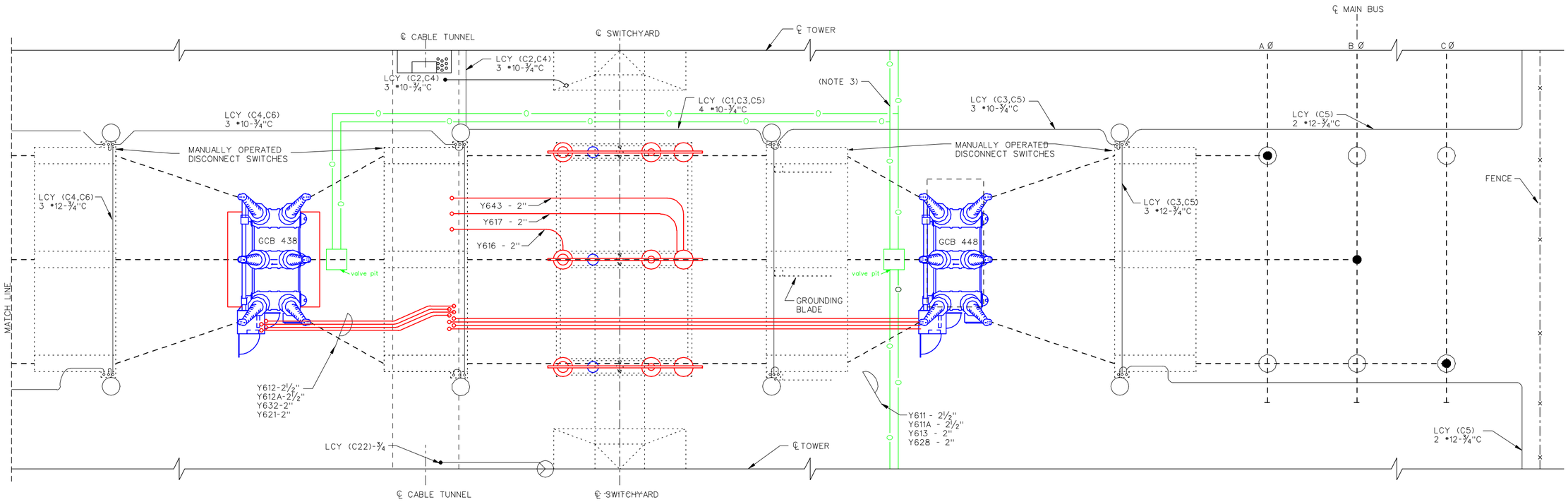

PLAN VIEW
BAY NO.6 - LINE NO.4
(DUKE POWER)

SCALE: 3/16" = 1'-0"
12"0 5' 10'

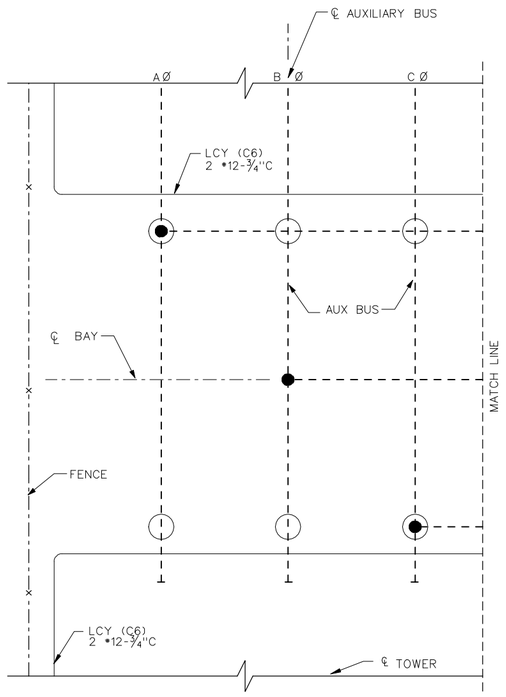

Flow

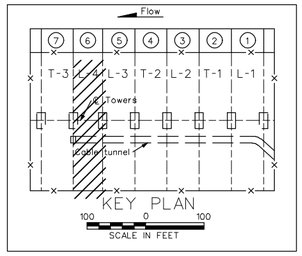

NOTES:

1. EXISTING CONDUITS SHALL BE REMOVED AND NEW CONDUITS INSTALLED AS REQUIRED COORDINATION WITH CONDUIT AND CABLE SCHEDULE REQUIRED.
2. EXTREME CAUTION SHALL BE EXERCISED BY THE CONTRACTOR WHILE EXCAVATING EXISTING CONDUITS. LIGHTING AND GROUNDING CONDUCTORS MAY NOT BE WHERE EXISTING DRAWINGS SHOW. ANY DAMAGE CAUSED SHALL BE THE RESPONSIBILITY OF THE CONTRACTOR.
3. EXISTING OIL PIPING SHALL BE REMOVED AS PER SPECIFICATION SECTION 16050.

SYMBOL	ZONE	DESCRIPTION	DATE	BY

REVISIONS

HYDROELECTRIC DESIGN CENTER
PORTLAND, OR

U.S. ARMY ENGINEER DISTRICT
CORPS OF ENGINEERS
SAVANNAH, GEORGIA

HARTWELL MAJOR REHABILITATION - PHASE 2
HARTWELL DAM AND LAKE
SWITCHYARD UPGRADE
BAY 6
CONDUIT ROUTING
SAVANNAH RIVER GEORGIA AND S. CAROLINA

SIZE	SOLICITATION NO.	FILE NO.	PLATE
F	DACW21-03-B-0007	HAR0157	E-61

SCALE: SHEET 77

03 Mar 2003
10:24:15

HAP103TB.DGN HAP103E61.DGN

...\Har0157\03B07w\HAP103E61.dgn 03/24/2003 11:48:17 AM

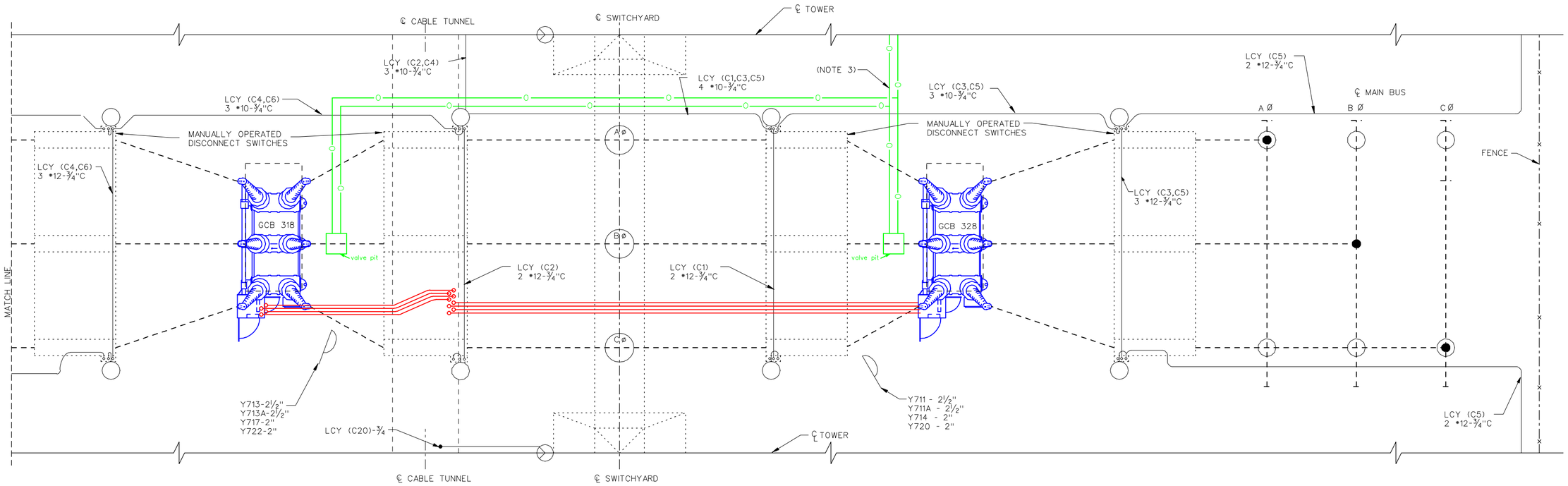

PLAN VIEW
BAY NO.7 - TRANSFORMER NO.3

SCALE: 3/16" = 1'-0"
12"0 5' 10'

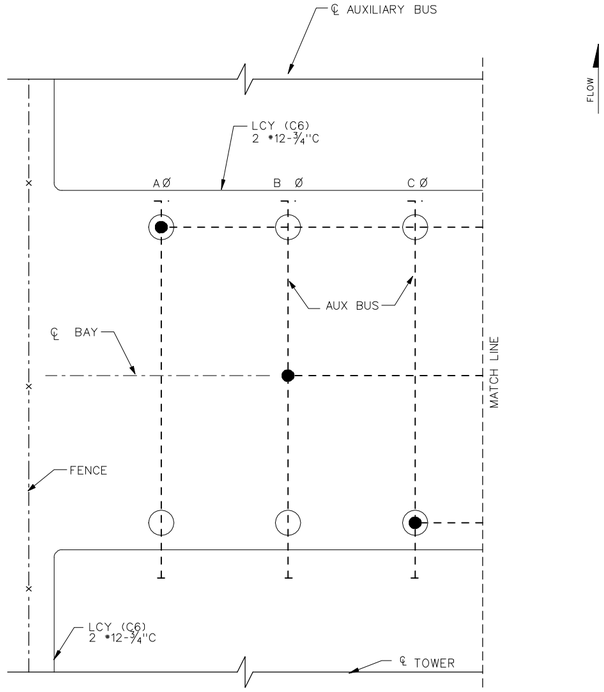

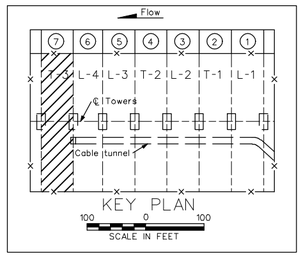

NOTES:

1. EXISTING CONDUITS SHALL BE REMOVED AND NEW CONDUITS INSTALLED AS REQUIRED COORDINATION WITH CONDUIT AND CABLE SCHEDULE REQUIRED.
2. EXTREME CAUTION SHALL BE EXERCISED BY THE CONTRACTOR WHILE EXCAVATING EXISTING CONDUITS. LIGHTING AND GROUNDING CONDUCTORS MAY NOT BE WHERE EXISTING DRAWINGS SHOW. ANY DAMAGE CAUSED SHALL BE THE RESPONSIBILITY OF THE CONTRACTOR.
3. EXISTING OIL PIPING SHALL BE REMOVED AS PER SPECIFICATION SECTION 16050.

SYMBOL	ZONE	DESCRIPTION	DATE	BY

REVISIONS

HYDROELECTRIC DESIGN CENTER
PORTLAND, OR

U.S. ARMY ENGINEER DISTRICT
CORPS OF ENGINEERS
SAVANNAH, GEORGIA

HARTWELL MAJOR REHABILITATION - PHASE 2
HARTWELL DAM AND LAKE
SWITCHYARD UPGRADE
BAY 7
CONDUIT ROUTING
SAVANNAH RIVER GEORGIA AND S. CAROLINA

SIZE	SOLICITATION NO.	FILE NO.	PLATE
F	DACW21-03-B-0007	HAR0157	E-62

SCALE: SHEET 78

HAP103TB.DGN HAP103E62.DGN

03 Mar 2003
153,746

...\Har0157\03B07w\HAP103E62.dgn 03/24/2003 11:50:00 AM

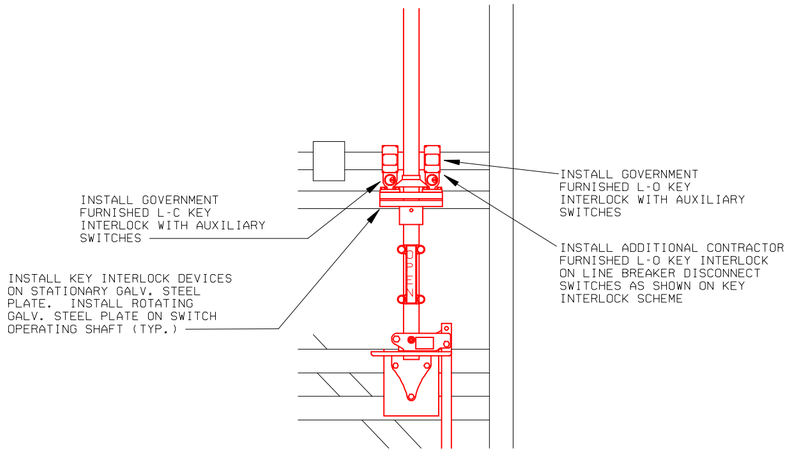

DETAIL A

TYPICAL BREAKER DISCONNECT SWITCH
KEY INTERLOCK INSTALLATION

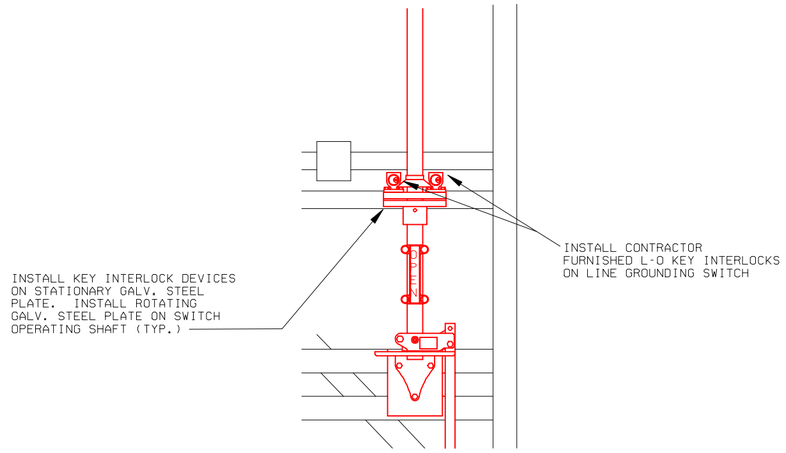

DETAIL B

TYPICAL LINE GROUNDING SWITCH
KEY INTERLOCK INSTALLATION

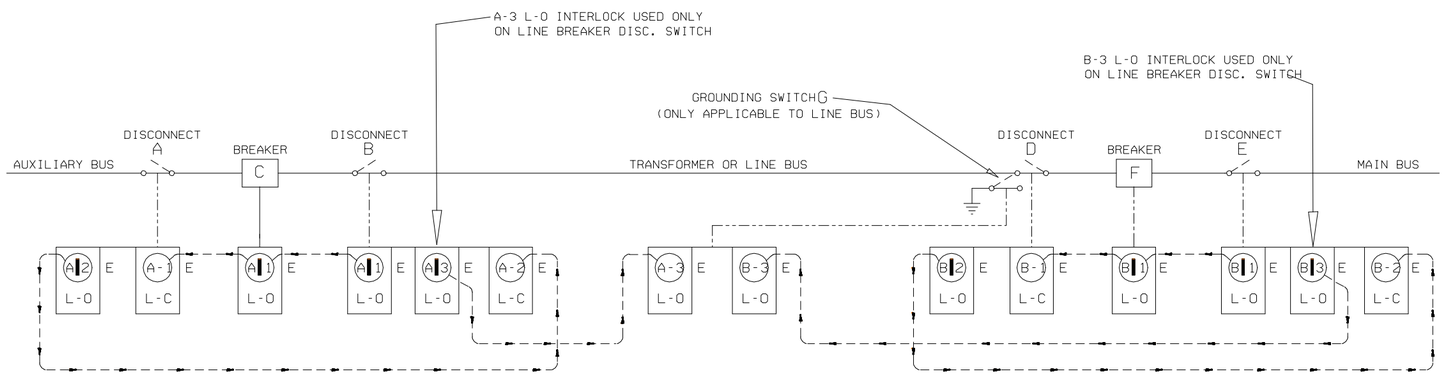

BREAKER C AND DISCONNECTS A AND B SHOWN CLOSED. ONE KEY A-1 IS HELD IN BREAKER L-O INTERLOCK AND OTHER KEY A-1 HELD IN L-O INTERLOCK ON DISCONNECT B. KEY A-2 IS HELD IN L-O INTERLOCK ON DISCONNECT A. KEY A-3 IS HELD IN L-O INTERLOCK ON DISCONNECT B.

1- OPEN BREAKER.
2- TURN KEY A-1 IN L-O INTERLOCK ON BREAKER TO LOCK OPEN. KEY A-1 IS NOW FREE.
3- INSERT KEY A-1 IN L-C INTERLOCK ON DISCONNECT A AND TURN TO UNLOCK. KEY A-1 IS NOW HELD.
4- OPEN DISCONNECT A.
5- TURN KEY A-2 IN L-O INTERLOCK ON DISCONNECT A TO LOCK OPEN. KEY A-2 IS NOW FREE.
6- INSERT KEY A-2 IN L-C INTERLOCK ON DISCONNECT B AND TURN TO UNLOCK. KEY A-2 IS NOW HELD.
7- OPEN DISCONNECT B.
8- TURN KEY A-1 IN L-O INTERLOCK ON DISCONNECT B TO LOCK OPEN. KEY A-1 IS NOW FREE.
9- IN CASE OF LINE BREAKER. TURN KEY A-3 IN L-O INTERLOCK ON DISCONNECT B TO LOCK OPEN. KEY A-3 IS NOW FREE.

IN CASE OF LINE BREAKERS. IF LINE IS TO BE GROUNDED:

10- INSERT KEY A-3 IN GROUNDING SWITCH G L-O INTERLOCK AND TURN TO UNLOCK FOR CLOSING GROUNDING SWITCH. (BOTH GROUNDING SWITCH KEY INTERLOCKS MUST BE UNLOCKED TO CLOSE GROUNDING SWITCH)

11- INSERT KEY A-1 IN BREAKER L-O INTERLOCK AND TURN TO UNLOCK FOR OPERATION DURING SERVICING.

REVERSE OPERATION TO RESTORE SERVICE.

BREAKER F AND DISCONNECTS D AND E SHOWN CLOSED. ONE KEY B-1 IS HELD IN BREAKER L-O INTERLOCK AND OTHER KEY B-1 HELD IN L-O INTERLOCK ON DISCONNECT E. KEY B-2 IS HELD IN L-O INTERLOCK ON DISCONNECT D. KEY B-3 IS HELD IN L-O INTERLOCK ON DISCONNECT E.

1- OPEN BREAKER.
2- TURN KEY B-1 IN L-O INTERLOCK ON BREAKER TO LOCK OPEN. KEY B-1 IS NOW FREE.
3- INSERT KEY B-1 IN L-C INTERLOCK ON DISCONNECT D AND TURN TO UNLOCK. KEY B-1 IS NOW HELD.
4- OPEN DISCONNECT D.
5- TURN KEY B-2 IN L-O INTERLOCK ON DISCONNECT D TO LOCK OPEN. KEY B-2 IS NOW FREE.
6- INSERT KEY B-2 IN L-C INTERLOCK ON DISCONNECT E AND TURN TO UNLOCK. KEY B-2 IS NOW HELD.
7- OPEN DISCONNECT E.
8- TURN KEY B-1 IN L-O INTERLOCK ON DISCONNECT E TO LOCK OPEN. KEY B-1 IS NOW FREE.
9- IN CASE OF LINE BREAKER. TURN KEY B-3 IN L-O INTERLOCK ON DISCONNECT E TO LOCK OPEN. KEY B-3 IS NOW FREE.

IN CASE OF LINE BREAKERS. IF LINE IS TO BE GROUNDED:

10- INSERT KEY B-3 IN GROUNDING SWITCH G L-O INTERLOCK AND TURN TO UNLOCK FOR CLOSING GROUNDING SWITCH. (BOTH GROUNDING SWITCH KEY INTERLOCKS MUST BE UNLOCKED TO CLOSE GROUNDING SWITCH)

11- INSERT KEY B-1 IN BREAKER L-O INTERLOCK AND TURN TO UNLOCK FOR OPERATION DURING SERVICING.

REVERSE OPERATION TO RESTORE SERVICE.

TYPICAL KEY INTERLOCK SCHEME

SYMBOL	ZONE	DESCRIPTION	DATE	BY

REVISIONS

HYDROELECTRIC DESIGN CENTER
PORTLAND, OR

U.S. ARMY ENGINEER DISTRICT
CORPS OF ENGINEERS
SAVANNAH, GEORGIA

HARTWELL MAJOR REHABILITATION - PHASE 2
HARTWELL DAM AND LAKE
SWITCHYARD UPGRADE
KEY INTERLOCK SCHEME
AND DETAILS
SAVANNAH RIVER GEORGIA AND S. CAROLINA

SIZE	SOLICITATION NO.	FILE NO.	PLATE
F	DACW21-03-B-0007	HAR0157	E-65

SCALE: SHEET 81

HAP103TB.DGN HAP103E65.DGN

...\Har0157\03B07w\HAP103E65.DGN 03/24/2003 11:50:48 AM

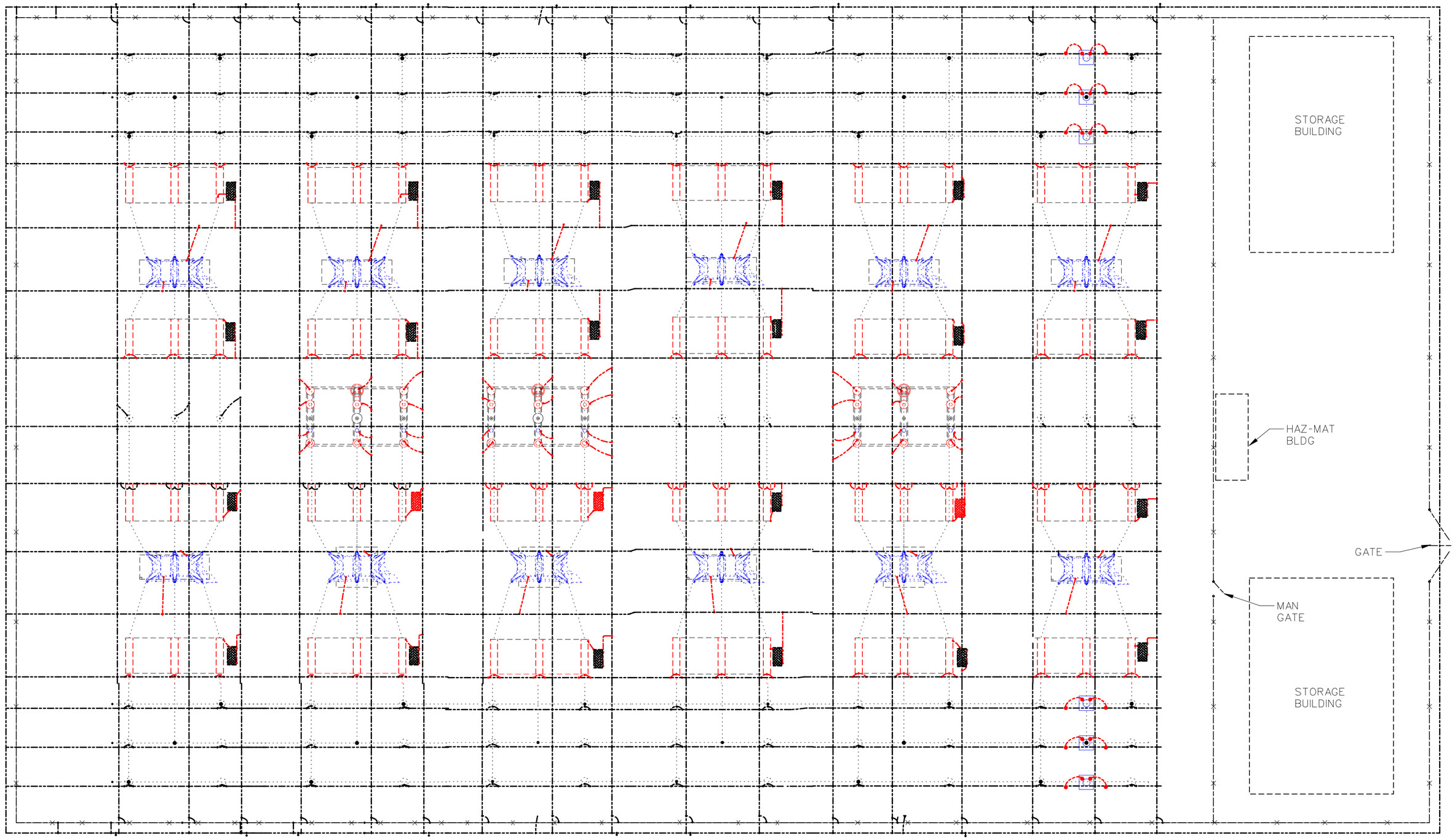

NOTES:

1. NOT ALL GROUND CONNECTIONS ARE SHOWN FOR CLARITY AND DOES NOT RELEASE THE CONTRACTOR'S RESPONSIBILITY FOR ALL GROUND CONNECTIONS AS INDICATED IN THE SPECIFICATIONS.
2. ALL NEW GROUND CONDUCTORS TO EQUIPMENT INSTALLED UNDER THIS CONTRACT SHALL BE NEW AND CONTINUOUS FROM THE EQUIPMENT TO THE SWITCHYARD GRID.
3. REFER TO APPENDIX 'A' SECTION 16050.
4. THE MINIMUM GOUNDING CONDUCTOR SIZE FOR ALL NEW EQUIPMENT OR FOR REPLACING AN EXISTING GROUND SHALL BE NO. 4/0 AWG AS PER SECTION 16050.

SYMBOL	ZONE	DESCRIPTION	DATE	BY

REVISIONS

HYDROELECTRIC DESIGN CENTER
PORTLAND, OR

U.S. ARMY ENGINEER DISTRICT
CORPS OF ENGINEERS
SAVANNAH, GEORGIA

HARTWELL MAJOR REHABILITATION - PHASE 2
HARTWELL DAM AND LAKE
SWITCHYARD UPGRADE
SWITCHYARD
GROUNDING PLAN
SAVANNAH RIVER GEORGIA AND S. CAROLINA

SIZE	SOLICITATION NO.	FILE NO.	PLATE
F	DACW21-03-B-0007	HAR0157	E-66

SCALE: SHEET 82

10 Mar 2003
13:45:47

HAP103TB.DGN HAP103E66.DGN

...\Har0157\03B07w\HAP103E66.dgn 03/24/2003 11:52:02 AM

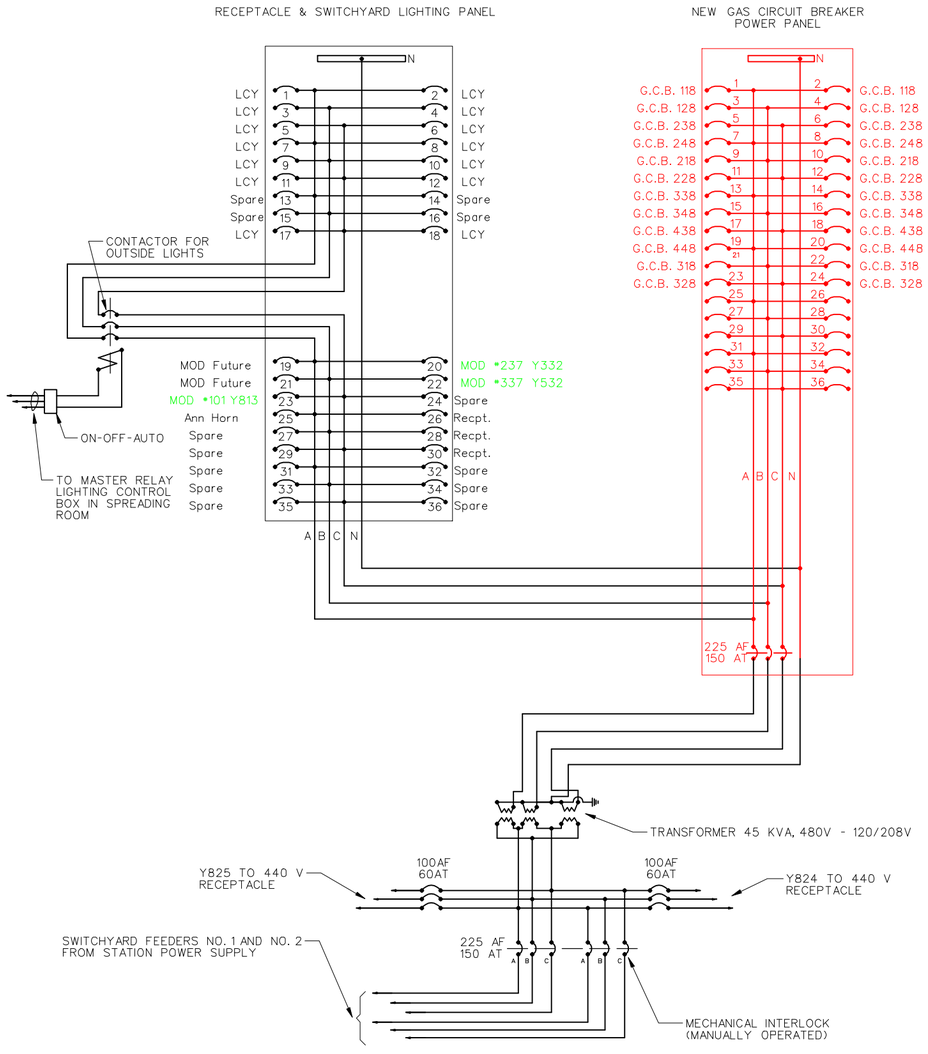

LOAD CENTER WIRING DIAGRAM
NOT TO SCALE

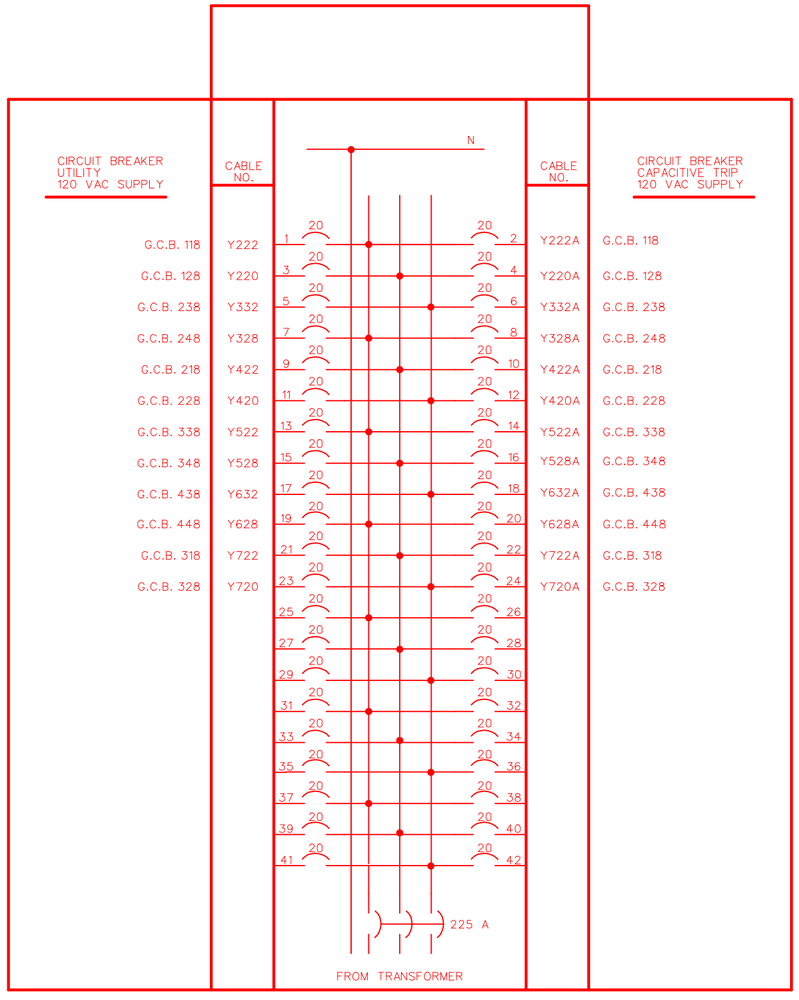

PANELBOARD, 3-PHASE 4-WIRE
480 - 208Y/120 VAC
WITH 225A MAIN BREAKER

NEW SWITCHYARD POWER PANEL LAYOUT

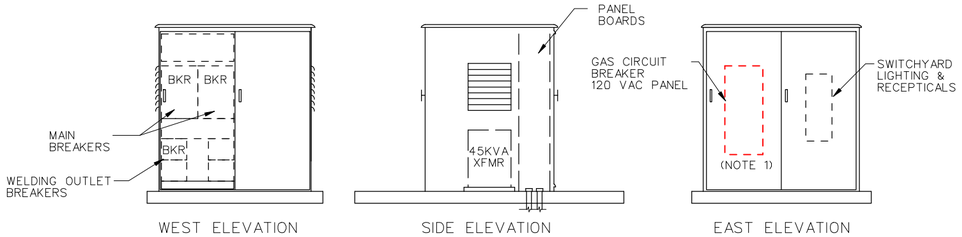

WEST ELEVATION

SIDE ELEVATION
45 KVA LOAD CENTER

EAST ELEVATION

NOTES:

1. EXISTING OCB POWER PANEL SHALL BE REPLACED WITH A NEW POWER PANEL TO SUPPLY 120 VAC TO THE NEW GCB HEATERS AND CAPACITIVE TRIP DEVICES.

SYMBOL	ZONE	DESCRIPTION	DATE	BY
		REVISIONS		

HYDROELECTRIC DESIGN CENTER
PORTLAND, OR

U.S. ARMY ENGINEER DISTRICT
CORPS OF ENGINEERS
SAVANNAH, GEORGIA

HARTWELL MAJOR REHABILITATION - PHASE 2
HARTWELL DAM AND LAKE
SWITCHYARD UPGRADE
SWITCHYARD POWER
480 / 208 VAC TRANSFORMER
SAVANNAH RIVER GEORGIA AND S. CAROLINA

SIZE	SOLICITATION NO.	FILE NO.	PLATE
F	DACW21-03-B-0007	HAR0157	E-67

SCALE: | SHEET 83

HAP103TB.DGN HAP103E67.DGN

...\Har0157\03B07w\HAP103E67.DGN 03/24/2003 11:54:52 AM

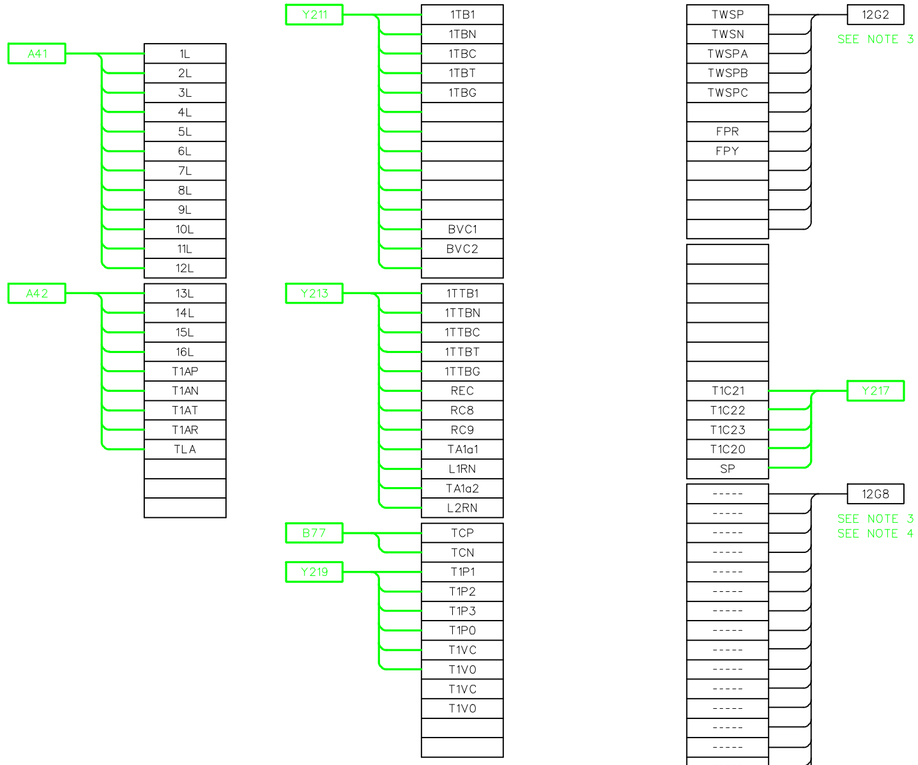

PANEL 6F
CONNECTIONS
EXISTING

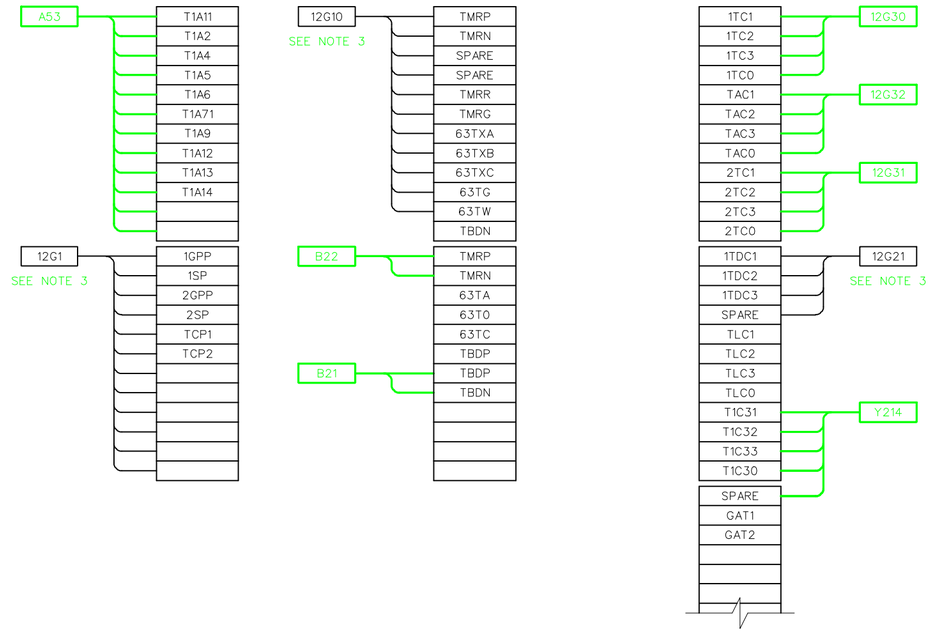

PANEL 6R
CONNECTIONS
EXISTING

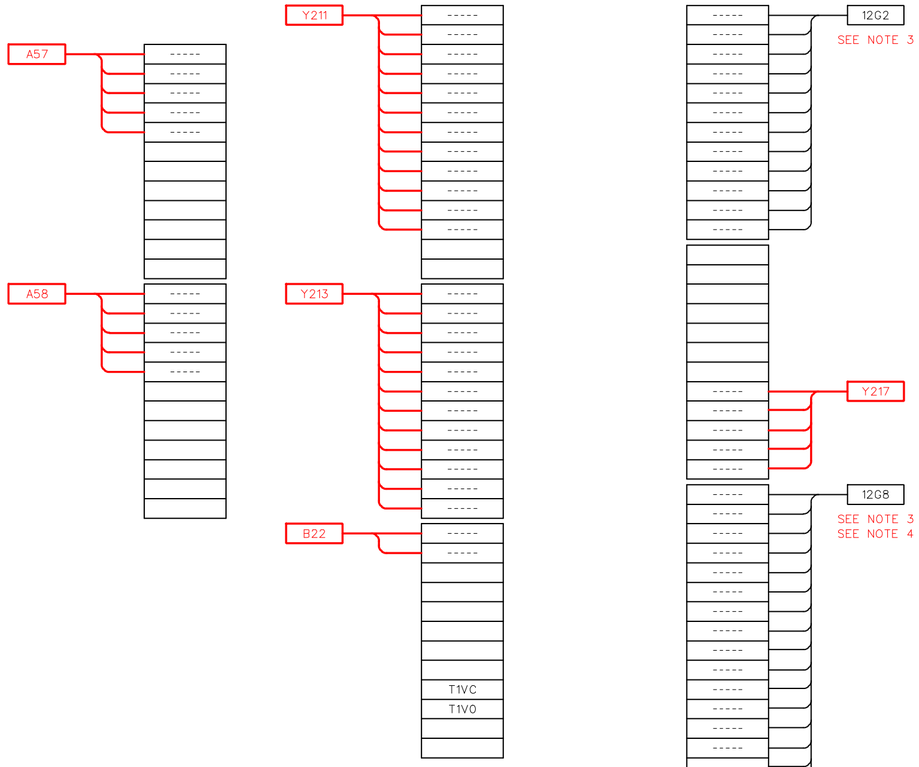

PANEL 6F
CONNECTIONS
NEW

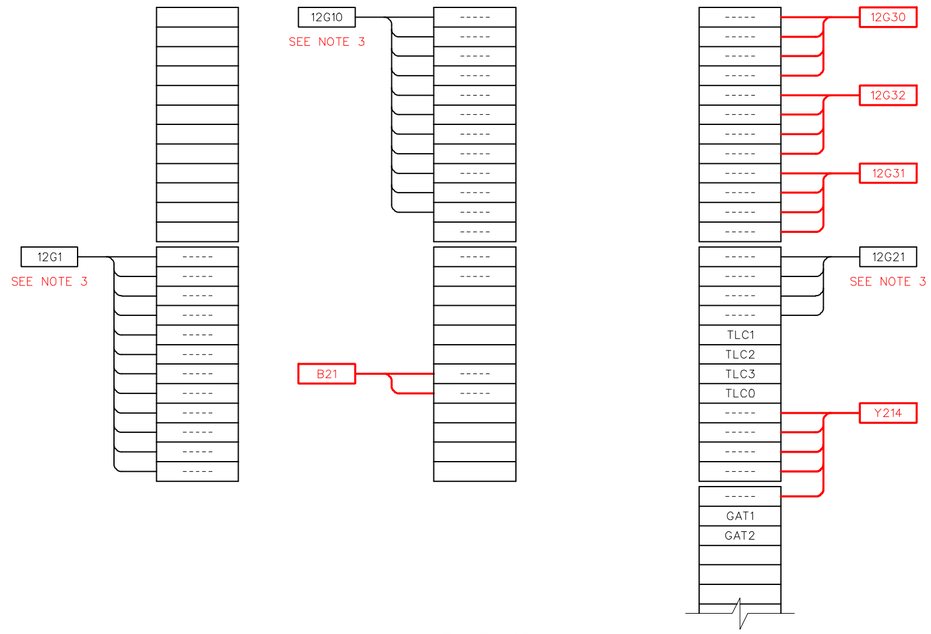

PANEL 6R
CONNECTIONS
NEW

REFERENCE DRAWINGS

KIRKHOF ELECTRIC E1592 SH. 19

NOTES:

1. VARIOUS EDITIONS OF THE REFERENCE DRAWINGS SHOW CONFLICTING WIRE DESIGNATIONS. THIS DRAWING IS BASED ON THE LATEST KNOWN EDITION OF THE REFERENCE DRAWINGS. FIELD VERIFY ALL CONNECTIONS AND WIRE DESIGNATIONS PRIOR TO STARTING WORK. PROVIDE AS-BUILT CORRECTIONS TO THIS DRAWING UPON COMPLETION OF WORK. SEE CONDUIT AND CABLE SCHEDULES SHEETS 1, 2, 16, 17, AND 18.
2. THIS DRAWING DEPICTS EXTERNAL CABLE CONNECTIONS TO THE PANELS. INTERNAL CABLE CONNECTIONS (CABLES WITHIN PANELS AND BETWEEN PANELS) ARE NOT SHOWN, AND SHALL BE THE RESPONSIBILITY OF THE CONTRACTOR.
3. DISCONNECT AND RECONNECT EXISTING WIRING, RELABEL IF NECESSARY, FIELD VERIFY.
4. FIELD VERIFY THIS TERMINAL BLOCK AND CABLE IN THE PANEL, NOT SHOWN ON REFERENCE DRAWING.

SYMBOL	ZONE	DESCRIPTION	DATE	BY

REVISIONS

HYDROELECTRIC DESIGN CENTER
PORTLAND, OR

U.S. ARMY ENGINEER DISTRICT
CORPS OF ENGINEERS
SAVANNAH, GEORGIA

HARTWELL MAJOR REHABILITATION - PHASE 2
HARTWELL DAM AND LAKE
SWITCHYARD UPGRADE
PANELS 6F & 6R
CONNECTION DIAGRAMS
SAVANNAH RIVER GEORGIA AND S. CAROLINA

SIZE	SOLICITATION NO.	FILE NO.	PLATE
F	DACW21-03-B-0007	HAR0157	E68

SCALE: SHEET 84

20 Feb 2003
112357

HAP103TB.DGN HAP103E68.DGN

...\Har0157\03B07w\HAP103E68.dgn 03/24/2003 11:55:30 AM