INDEX OF DRAWINGS

PLATE NO.	SHEET NO.	DGN FILE	TITLE	
			SWITCHYARD UPGRADE DRAWINGS	
			GENERAL	
G-01	1	HAP103G01	COVER SHEET	
G-02	2	HAP103G02	DRAWING INDEX	SHEET ONE
G-03	3	HAP103G03	DRAWING INDEX	SHEET TWO
G-04	4	HAP103G04	PROJECT LOCATION	AND VICINITY MAP
G-05	5	HAP103G05	PROJECT SITE MAP	AND GENERAL PLAN
G-06	6	HAP103G06	CONTRACTOR STAGING AREA	AND STORAGE PLAN
G-07	7	HAP103G07	WORK LOCATION	POWERHOUSE EL 515.0
G-08	8	HAP103G08	WORK LOCATION	POWERHOUSE EL 498.5
G-09	9	HAP103G09	NOTES AND LEGEND	
G-10	10	HAP103G10	NOMENCLATURE	
			STRUCTURAL	
S-01	11	HAP103S01	STRUCTURAL GENERAL NOTES	
S-02	12	HAP103S02	DEMOLITION	
S-03	13	HAP103S03	FOUNDATION AND TOP STEEL FRAMING PLAN	
S-04	14	HAP103S04	STRUCTURAL DETAILS	SHEET 1
S-05	15	HAP103S05	STRUCTURAL DETAILS	SHEET 2
S-06	16	HAP103S06	STRUCTURAL DETAILS	SHEET 3
S-07	16A	HAP103S07	PT STEEL SUPORT FOUNDATION	PLAN AND DETAILS
S-08	16B	HAP103S08	STRUCTURAL DETAILS	
			ELECTRICAL	
E-01	17	HAP103E01	MAIN ONE-LINE DIAGRAM	EQUIPMENT REMOVAL
E-02	18	HAP103E02	MAIN ONE-LINE DIAGRAM	NEW EQUIPMENT
E-03	19	HAP103E03	MAIN THREE-LINE, BAYS 2 AND 3	EQUIPMENT REMOVAL
E-04	20	HAP103E04	MAIN THREE-LINE, BAYS 2 AND 3	NEW EQUIPMENT
E-05	21	HAP103E05	MAIN THREE-LINE, BAYS 4 AND 5	EQUIPMENT REMOVAL
E-06	22	HAP103E06	MAIN THREE-LINE, BAYS 4 AND 5	NEW EQUIPMENT
E-07	23	HAP103E07	MAIN THREE-LINE, BAYS 6 AND 7	EQUIPMENT REMOVAL
E-08	24	HAP103E08	MAIN THREE-LINE, BAYS 6 AND 7	NEW EQUIPMENT
E-09	25	HAP103E09	LINE METERING THREE-LINE DIAGRAM	EQUIPMENT REMOVAL
E-10	26	HAP103E10	LINE METERING THREE-LINE DIAGRAM	NEW EQUIPMENT
E-11	27	HAP103E11	XFMR METERING THREE-LINE DIAGRAM	EQUIPMENT REMOVAL
E-12	28	HAP103E12	XFMR METERING THREE-LINE DIAGRAM	NEW EQUIPMENT
E-13	29	HAP103E13	LINE AND BUS RELAYING	EQUIPMENT REMOVAL
E-14	30	HAP103E14	LINE AND BUS RELAYING	NEW EQUIPMENT
E-15	31	HAP103E15	TRANSFORMER RELAYING, SH.1	EQUIPMENT REMOVAL
E-16	32	HAP103E16	TRANSFORMER RELAYING, SH.2	EQUIPMENT REMOVAL
E-17	33	HAP103E17	TRANSFORMER RELAYING, SH.1	NEW EQUIPMENT
E-18	34	HAP103E18	TRANSFORMER RELAYING, SH.2	NEW EQUIPMENT
E-19	35	HAP103E19	BREAKER SYNCHRONIZING SCHEMATIC	EQUIPMENT REMOVAL
E-20	36	HAP103E20	BREAKER SYNCHRONIZING SCHEMATIC	NEW EQUIPMENT
E-21	37	HAP103E21	BREAKER & MOD SCHEMATICS, SH.1	EQUIPMENT REMOVAL
E-22	38	HAP103E22	BREAKER & MOD SCHEMATICS, SH.2	EQUIPMENT REMOVAL
E-23	39	HAP103E23	BREAKER CONTROL SCHEMATICS, SH.1	NEW EQUIPMENT
E-24	40	HAP103E24	BREAKER CONTROL SCHEMATICS, SH.2	NEW EQUIPMENT
E-25	41	HAP103E25	ANNUNCIATOR SCHEDULE	EQUIPMENT REMOVAL
E-26	42	HAP103E26	ANNUNCIATOR SCHEDULE	NEW EQUIPMENT
E-27	43	HAP103E27	MAIN CONTROL BOARD	EQUIPMENT REMOVAL
E-28	44	HAP103E28	MAIN CONTROL BOARD	NEW EQUIPMENT
E-29	45	HAP103E29	MAIN RELAY BOARD	EQUIPMENT REMOVAL
E-30	46	HAP103E30	MAIN RELAY BOARD	NEW EQUIPMENT
E-31	47		NOT USED	

PLATE NO.	SHEET NO.	DGN FILE	TITLE	
E-32	48		NOT USED	
E-33	49		NOT USED	
E-34	50		NOT USED	
E-35	51	HAP103E35	BREAKERS NO. 118 AND 128	CT CONNECTIONS
E-36	52	HAP103E36	BREAKERS NO. 238 AND 248	CT CONNECTIONS
E-37	53	HAP103E37	BREAKERS NO. 218 AND 228	CT CONNECTIONS
E-38	54	HAP103E38	BREAKERS NO. 338 AND 348	CT CONNECTIONS
E-39	55	HAP103E39	BREAKERS NO. 438 AND 448	CT CONNECTIONS
E-40	56	HAP103E40	BREAKERS NO. 318 AND 328	CT CONNECTIONS
E-41	57	HAP103E41	SWITCHYARD PLAN	EXISTING CONFIGURATION
E-42	58	HAP103E42	SWITCHYARD PLAN	NEW CONFIGURATION
E-43	59	HAP103E43	SWITCHYARD WORK SEQUENCE	PHASE 1 - PHASE 8
E-44	60	HAP103E44	SWYD BAYS 2, 4, 7	EQUIPMENT REMOVAL
E-45	61	HAP103E45	SWYD BAYS 2, 4, 7	NEW EQUIPMENT
E-46	62	HAP103E46	SWITCHYARD BAY 3	EQUIPMENT REMOVAL
E-47	63	HAP103E47	SWITCHYARD BAY 3	NEW EQUIPMENT
E-48	64	HAP103E48	SWITCHYARD BAYS 5, 6	EQUIPMENT REMOVAL
E-49	65	HAP103E49	SWITCHYARD BAYS 5, 6	NEW EQUIPMENT
E-50	66		NOT USED	
E-51	67		NOT USED	
E-52	68	HAP103E52	BAY 3 LINE 2	EXISTING AND NEW EQUIPMENT
E-53	69	HAP103E53	BAYS 5 AND 6, LINES 2 AND 3	EXISTING AND NEW EQUIPMENT
E-54	70	HAP103E54	VIEWS AND DETAILS	SHEET ONE
E-55	71	HAP103E55	VIEWS AND DETAILS	SHEET TWO
E-56	72	HAP103E56	SWITCHYARD TUNNEL	CONDUIT ROUTING
E-57	73	HAP103E57	BAY TWO	CONDUIT ROUTING
E-58	74	HAP103E58	BAY THREE	CONDUIT ROUTING
E-59	75	HAP103E59	BAY FOUR	CONDUIT ROUTING
E-60	76	HAP103E60	BAY FIVE	CONDUIT ROUTING
E-61	77	HAP103E61	BAY SIX	CONDUIT ROUTING
E-62	78	HAP103E62	BAY SEVEN	CONDUIT ROUTING
E-63	79		NOT USED	
E-64	80		NOT USED	
E-65	81	HAP103E65	KIRK KEY INTERLOCK DIAGRAM	
E-66	82	HAP103E66	SWITCHYARD GROUNDING PLAN	
E-67	83	HAP103E67	SWITCHYARD POWER	480 / 208 VAC TRANSFORMER
E-68	84	HAP103E68	PANELS 6F & 6R	CONNECTION DIAGRAMS
E-69	85	HAP103E69	PANELS 5F & 5R	CONNECTION DIAGRAMS
E-70	86	HAP103E70	PANELS 4F & 4R	CONNECTION DIAGRAMS
E-71	87	HAP103E71	PANELS 3F & 3R	CONNECTION DIAGRAMS
E-72	88	HAP103E72	PANELS 2F & 2R	CONNECTION DIAGRAMS
E-73	89	HAP103E73	PANELS 1F & 1R	CONNECTION DIAGRAMS
E-74	90	HAP103E74	CONDUIT AND CABLE SCHEDULE	SHEET 1
E-75	91	HAP103E75	CONDUIT AND CABLE SCHEDULE	SHEET 2
E-76	92	HAP103E76	CONDUIT AND CABLE SCHEDULE	SHEET 3
E-77	93	HAP103E77	CONDUIT AND CABLE SCHEDULE	SHEET 4
E-78	94	HAP103E78	CONDUIT AND CABLE SCHEDULE	SHEET 5
E-79	95	HAP103E79	CONDUIT AND CABLE SCHEDULE	SHEET 6
E-80	96	HAP103E80	CONDUIT AND CABLE SCHEDULE	SHEET 7
E-81	97	HAP103E81	CONDUIT AND CABLE SCHEDULE	SHEET 8
E-82	98	HAP103E82	CONDUIT AND CABLE SCHEDULE	SHEET 9
E-83	99	HAP103E83	CONDUIT AND CABLE SCHEDULE	SHEET 10
E-84	100	HAP103E84	CONDUIT AND CABLE SCHEDULE	SHEET 11
E-85	101	HAP103E85	CONDUIT AND CABLE SCHEDULE	SHEET 12
E-86	102	HAP103E86	CONDUIT AND CABLE SCHEDULE	SHEET 13
E-87	103	HAP103E87	CONDUIT AND CABLE SCHEDULE	SHEET 14
E-88	104	HAP103E88	CONDUIT AND CABLE SCHEDULE	SHEET 15
E-89	105	HAP103E89	CONDUIT AND CABLE SCHEDULE	SHEET 16
E-90	106	HAP103E90	CONDUIT AND CABLE SCHEDULE	SHEET 17
E-91	107	HAP103E91	CONDUIT AND CABLE SCHEDULE	SHEET 18
E-92	108	HAP103E92	CONDUIT AND CABLE SCHEDULE	SHEET 19

SECTION SYMBOLS

SECTIONS OR ELEVATIONS REFERING TO A DRAWING IN SAME SERIES OF DRAWINGS IS SHOWN THUS:

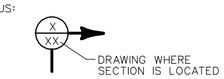

SECTION OR ELEVATION SHOWN ON SAME DRAWING IS SHOWN THUS:

MATERIAL INDICATIONS

- EARTH (ORIGINAL GRADE)
- EARTH (COMPACTED FILL)
- GRAVEL
- MORTAR - CEMENT - PLASTER - STUCCO
- CONCRETE MASONRY UNITS (C.M.U., SMALL SCALE - PLAN)
- CONCRETE MASONRY UNITS (C.M.U., LARGE SCALE - SECTION)
- CONCRETE MASONRY UNITS OR HOLLOW TILE (SMALL SCALE - SECTION)
- METAL (ELEVATION)
- STEEL (CROSS SECTION)
- INSULATION (RIGID)
- INSULATION (LOOSE OR BATT)
- BRICK
- WOOD (BLOCKING)
- WOOD (FINISH)
- CONCRETE

STANDARD ABBREVIATIONS

A	
A.C.	AIR CONDITIONED
A.D.	AREA DRAIN
A.H.U.	AIR HANDLING UNIT
ALT.	ALTERNATE
ALUM.	ALUMINUM
AMP., A.	AMPERES
A.O.	ACCESS OPENING
APPROX.	APPROXIMATELY
ARCH.	ARCHITECTURAL
A.T.	ASPHALT TILE
A.T.C.	ACOUSTIC TILE CEILING
B	
BAL.	BALANCE
BD.	BOARD
BLDG.	BUILDING
BLK.	BLANK
BM.	BEAM
BOT.	BOTTOM
BRG.	BEARING
B.T.U.H.	BRITISH THERMO UNIT/HOUR
C	
CAB.	CABINET
CAP.	CAPACITY
C/B	CIRCUIT BREAKER
C.D.	CEILING DIFFUSER
CEM.	CEMENT
CER.	CERAMIC
C.F.M.	CUBIC FEET/MINUTE
CIRC.	CIRCULATING
C.J.	CONTROL JOINT
CK'D	CHECKERED
CKT.	CIRCUIT
℄	CENTER LINE
CEIL.	CEILING
CL.	CLOSET
C.M.U.	CONCRETE MASONRY UNIT
C.O.	CLEAN OUT
COL.	COLUMN
CONC.	CONCRETE
COND.	CONDENSATE
CONN.	CONNECTION
CONST.	CONSTRUCTION
CONT.	CONTINUOUS
CONTR. JT.	CONTRACTION JOINT
C.T.	CERAMIC TILE
C.T.B.	CERAMIC TILE BASE
C. TO C.	CENTER TO CENTER
D	
DET.	DETAIL
DIA.	DIAMETER
DIFF.	DIFFUSER
DIM.	DIMENSION
DISC.	DISCONNECT
D.J.	DUMMY JOINT
DN.	DOWN
DR.	DRAIN
D.S.	DOWN SPOUT
DWG.(S)	DRAWING(S)
E	
EA.	EACH
E.C.	EMPTY CONDUIT
E.F.	EXHAUST FAN
EL.	ELEVATION
ELEC.	ELECTRIC
EQUIP.	EQUIPMENT
E.W.C.	ELECTRIC WATER COOLER
EXH.	EXHAUST
EXP. JT.	EXPANSION JOINT
EXT.	EXTERIOR
EXIST.	EXISTING
F	
F.A.	FIRE ALARM
F.C.	FLEXIBLE CONNECTION
F.D.	FLOOR DRAIN
F.E.C.	FIRE EXTINGUISHER CABINET
FIN.	FINISH
FL.	FLOOR
FT.	FOOT, FEET
FTG.	FOOTING
G	
GA.	GAGE
GAL.	GALLON
GALV.	GALVANIZED
G.F.E.	GOVERNMENT FURNISHED EQUIPMENT
GL.	GLASS
GND.	GROUND
GOV'T	GOVERNMENT
G.P.H.	GALLONS/HOUR
G.P.M.	GALLONS/MINUTE
GR.	GRILLE
G.W.B.	GYPSUM WALL BOARD
GYP.	GYPSUM
H	
H.	HIGH
H.B.	HOSE BIBB
H.C.	HOLLOW CORE
HT.	HEIGHT
H.M.	HOLLOW METAL
H.P.	HORSE POWER
HR.	HOUR
HTG.	HEATING
HTR.	HEATER
H.&V.	HEATING AND VENTILATING
HW.	HARDWARE
HYD.	HYDRANT
I	
I.D.	INSIDE DIAMETER
I.E.	INVERT ELEVATION
IN.	INCHES
INCAND.	INCANDESCENT
INSUL.	INSULATION
INT.	INTERIOR
J	
J.B.	JUNCTION BOX
JCT.	JUNCTION
JT.	JOINT
K	
KVA	KILOVOLT AMPERE
KW	KILOWATT
L	
LB.,#	POUND
LG.	LONG
L.P.	LIGHTING PANEL
LTG.	LIGHTING
M	
M.	MOTOR
MAINT.	MAINTENANCE
MAX.	MAXIMUM
M.D.P.	MAIN DISTRIBUTION PANEL
MECH.	MECHANICAL
MTL.	METAL
MIN.	MINIMUM
MISC.	MISCELLANEOUS
M.O.	MASONRY OPENING
M.T.	METAL THRESHOLD
MTD.	MOUNTED
MTG.	MOUNTING
M.V.	MECHANICAL VENTILATION
M.G.T.	MATT GLAZE TILE
N	
N.A.	NOT APPLICABLE
N.I.C.	NOT IN CONTRACT
NO.	NUMBER
O	
O.A.	OUTDOOR AIR
O.C.	ON CENTER
O.D.	OUTSIDE DIAMETER
OH.	OVERHEAD
OL.	OVERLOAD
OPNG.	OPENING
OPP.	OPPOSITE
O.S.D.	OPEN SIGHT DRAIN
P	
P.	PAPER
PART.	PARTITION
PER.	PERIMETER
ℙ, PL.	PLATE
PLBG.	PLUMBING
PLYWD	PLYWOOD
PNL.	PANEL
PRESS.	PRESSURE
PSF	POUNDS/SQUARE FOOT
PSI	POUNDS/SQUARE INCH
PSIG	POUNDS/SQUARE INCH GAGE
PT.	POINT
PTD.	PAINTED
Q	
QTR.	QUARTER
QUAN.	QUANTITY
R	
R.	RISER
R.A.	RETURN AIR
RAD.	RADIUS
RD.	ROUND
REC'D.	RECESSED
RECIRC.	RECIRCULATING
RECP.	RECEPTACLE
REG.	REGISTER
REINF.	REINFORCING
REQ.	REQUIRED
RET.	RETURN
R.G.	RETURN GRILLE
RM.	ROOM
R.P.M.	REVOLUTION/MINUTE
S	
S.	SUPPLY
S.A.	SUPPLY AIR
SCH.	SCHEDULE
SECT.	SECTION
SERV.	SERVICE
SHT.	SHEET
S.J.	SLIP JOINT
SPEC.	SPECIFICATIONS
SQ. FT.	SQUARE FEET
ST.	STEEL
STOR.	STORAGE
STRUC.	STRUCTURAL
SUSP.	SUSPENDED
SW.	SWITCH
T	
T.	TOILET
TEL.	TELEPHONE
TEMP.	TEMPERATURE
THK.	THICKNESS
THD.	THRESHOLD
TOIL.	TOILET
TYP.	TYPICAL
V	
V.	VOLT
V.A.T.	VINYL ASBESTOS TILE
VENT.	VENTILATION
VERT.	VERTICAL
VTR	VENT THRU ROOF
W	
W.	WATT
W/	WITH
WD.	WOOD
W.D.	WINDOW DIMENSION
WF	WIDE FLANGE
W.G.	WATER GAGE
WP.	WEATHERPROOF
WTR.	
W.W.F.	WELDED WIRE FABRIC

SYMBOL	ZONE	DESCRIPTION	DATE	BY
C	B-5	GENERAL REVISIONS: AMENDMENT 0005	27 MAY 03	
1	C-5	GENERAL REVISIONS: AMENDMENT 0002	18 APR 03	

REVISIONS

HYDROELECTRIC DESIGN CENTER
PORTLAND, OR

U.S. ARMY ENGINEER DISTRICT
CORPS OF ENGINEERS
SAVANNAH, GEORGIA

HARTWELL MAJOR REHABILITATION - PHASE 2
HARTWELL DAM AND LAKE
SWITCHYARD UPGRADE
DRAWING INDEX
SHEET 1
SAVANNAH RIVER GEORGIA AND S. CAROLINA

SIZE	SOLICITATION NO.	FILE NO.	PLATE
F	DACW21-03-B-0007	HAR0157	G-02

SCALE: NONE SHEET 2

HAP103TB.DGN HAP103G02.DGN

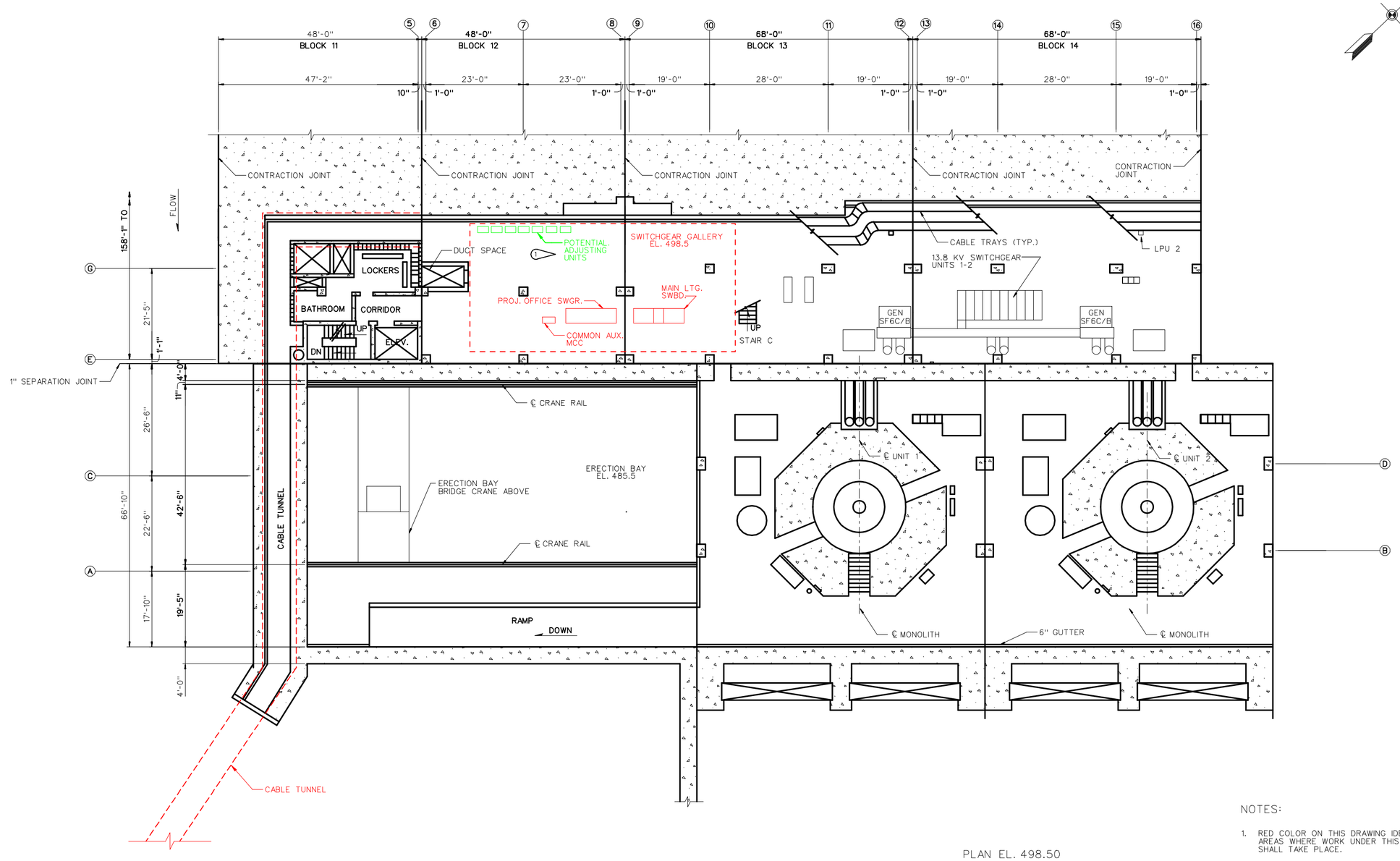

PLAN EL. 498.50

SCALE: 1" = 10'

10' 0 10'

NOTES:

1. RED COLOR ON THIS DRAWING IDENTIFIES AREAS WHERE WORK UNDER THIS CONTRACT SHALL TAKE PLACE.
2. WORK IN THESE AREAS SHALL BE COORDINATED WITH THE COR, NOT ALL EQUIPMENT SHOWN FOR PURPOSE OF CLARITY.

SYMBOL	ZONE	DESCRIPTION	DATE	BY
1	C-3	ADDED LINE TUNERS: AMENDMENT 0005	27 MAY 03	

REVISIONS

HYDROELECTRIC DESIGN CENTER
PORTLAND, OR

U.S. ARMY ENGINEER DISTRICT
CORPS OF ENGINEERS
SAVANNAH, GEORGIA

HARTWELL MAJOR REHABILITATION - PHASE 2
HARTWELL DAM AND LAKE
SWITCHYARD UPGRADE
WORK LOCATIONS
POWERHOUSE EL 498.5
SAVANNAH RIVER GEORGIA AND S. CAROLINA

SIZE	SOLICITATION NO.	FILE NO.	PLATE
F	DACW21-03-B-0007	HAR0157	G-08

SCALE: SHEET 8

HAP103TB.DGN HAP103G08.DGN

...\Har0157\amd5\HAP103G08.dgn 05/29/2003 08:29:20 AM

GRAPHIC SYMBOLS LEGEND

- 230 KV SWITCHYARD CIRCUIT BREAKER
- 90 — AIR CIRCUIT BREAKER, NUMBER INDICATES TRIP RATING IN AMPERES.
- DISCONNECT SWITCH
- DISCONNECTING DEVICE, DISCONNECTING CONTACT
- 200-5 — CURRENT TRANSFORMER, 200 TO 5 CURRENT RATIO
- 3 — POTENTIAL OR CONTROL TRANSFORMER, 3 TOTAL (ONE LINE DIAGRAM)
- POWER TRANSFORMER (ONE LINE DIAGRAM)
- TRANSFORMER (CONTROL DIAGRAM)
- RESISTOR
- BUSHING CURRENT TRANSFORMER (ONE LINE DIAGRAM)
- FUSE
- CONTACTS (NORMALLY CLOSED)
- CONTACTS (NORMALLY OPEN)
- R — INDICATING LIGHT, LETTER INDICATES COLOR
- SURGE ARRESTER
- CONNECTION TO GROUND BUS
- TB — TEST BLOCK
- AS — AMMETER SWITCH
- VS — VOLTMETER SWITCH
- EQUIPMENT ENCLOSURE

EXAMPLES

- X OR X — AUXILIARY RELAY
- 23 OR 23 — 42 OR 42 — NUMBER OR LETTERS INDICATE DEVICE FUNCTION AS NOTED
- 42X OR 42X — SUFFIX X INDICATES ASSOCIATED AUXILIARY RELAY
- 42-1 OR 42-1 — 42DP OR 42DP — SUFFIX USED FOR IDENTIFICATION

CONDUIT, PIPING, AND GROUNDING LEGEND

- CONDUIT EXPOSED
- CONDUIT EMBEDDED IN FLOOR OR WALL
- CONDUIT TURNED TOWARD OBSERVER
- CONDUIT TURNED AWAY FROM OBSERVER
- O — OIL PIPING

CONTROL DEVICE FUNCTION

1	CONTROL SWITCH
2	TIME DELAY RELAY GT - GENERATOR BACKUP TRIP RELAY TC - TRIP COIL FAILURE RELAY TQ - TRANSFORMER OIL PUMP
3T	BREAKER INTERLOCKING RELAY
4X	TRANSFORMER CENTRALIZED CONTROL RELAY
5C	COMPLETE SHUTDOWN RELAY
5P	PARTIAL SHUTDOWN RELAY
20	ELECTRICALLY OPERATED VALVE TW - TRANS. WATER SPRAY
26	THERMAL DEVICE QT - TRANSFORMER OIL
27	UNDERVOLTAGE RELAY: T-TRANS.
27-1	OIL PUMP UNDERVOLTAGE RELAY
42TQ	TRANSFORMER OIL PUMP CONTACTOR
43	CONTROL TRANSFER SWITCH
43RT	RELAY TRANSFER SWITCH: L2-LINE NO.2, L3-LINE NO. 3
45	GAS DETECTOR RELAY
45M	DISSOLVED GAS ANALYZER
49	TEMPERATURE RELAY
51N	GROUND OVERCURRENT RELAY: T-TRANS.
52	A-C CIRCUIT BREAKER
52A	BREAKER AUXILIARY (CLOSED WHEN BREAKER CLOSED)
52B	BREAKER AUXILIARY (CLOSED WHEN BREAKER OPEN)
62	TIME DELAY OPENING RELAY: T-TRANS. OIL PUMP
63	PRESSURE OR FLOW SWITCH GDR - GAS DETECTOR RELAY L - LINE OCB PHA - P.H. AUX. OCB PHM - P.H. MAIN OCB PR - PRESSURE RELIEF DEVICE T - TRANS. SUDDEN PRESSURE
69CS	MOD PERMISSIVE SWITCH
71Q	OIL LEVEL GAUGE (CONSERVATOR TANK)
74	ALARM RELAY
80	FLOW SWITCH: Q-OIL, TO-TRANS. OIL, X-AUX. RELAY
85/CO	CARRIER CUTOFF SWITCH
85/TS	CARRIER TEST SWITCH
86	LOCKOUT RELAY
87	DIFFERENTIAL RELAY B - BUS L - POWERHOUSE LINE T - TRANSFORMER TZ - WATER SPRAY RELEASE X - AUXILIARY
94	AUXILIARY TRIP RELAY
121	DIRECTIONAL DISTANCE RELAY
121X	TIMING RELAY: T1,T2,T3-TIMER ZONE TARGETS
125	SYNCHRONISM CHECK RELAY
127	UNDERVOLTAGE RELAY: B-BUS, L-LINE
129	MOTOR OPERATED DISCONNECT SWITCH (MOD): A-AUXILIARY SWITCH CLOSED WHEN BREAKER IS CLOSED, B-AUXILIARY SWITCH CLOSED WHEN BREAKER IS OPEN. C-CONTACTOR CLOSING COIL, O-CONTACTOR OPENING COIL
129A	230 KV AUXILIARY BUS MOD
129L	230 KV LINE MOD: 2-LINE NO. 2, 3-LINE NO. 3, 4-LINE NO. 4
151	PHASE OVERCURRENT RELAY
151N	GROUND OVERCURRENT RELAY
152	OIL CIRCUIT BREAKER: A-AUXILIARY SWITCH CLOSED WHEN BREAKER IS CLOSED, B-AUXILIARY SWITCH CLOSED WHEN BREAKER IS OPEN.
152BF	OIL CIRCUIT BREAKER FAILURE RELAY
152LM	230KV LINE MAIN OCB: 2-LINE NO. 2, 3-LINE NO. 3, 4-LINE NO. 4
152TA	230KV TRANSFORMER AUXILIARY OCB: 1-TRANS NO. 1, 2-TRANS NO. 2, 3-TRANS NO. 3
152TM	230KV TRANSFORMER MAIN OCB: 1-TRANS NO. 1 , 2-TRANS NO. 2, 3-TRANS NO. 3
167CG	CARRIER DIRECTIONAL GROUND RELAY
167G	DIRECTIONAL GROUND RELAY: D-DIRECTIONAL UNIT
179	RECLOSING RELAY
185	CARRIER CURRENT AUXILIARY RELAY
194	AUXILIARY TRIP RELAY
A	AIR, AUTOMATIC, AUXILIARY
ANN	ANNUNCIATION
B	BACKUP, BUS
C	CLOSE
CC	CLOSING COIL
CCVT	COUPLING CAPACITOR VOLTAGE TRANSFORMER
CS	CONTROL SWITCH
DACS	RTD DATA ACQUISITION COMPUTER
G	GENERATOR, GREEN, GROUND
GCB	GAS CIRCUIT BREAKER
HR	HAND RESET
L	LOWER, LOCAL, LINE
LCO	LAMP CUTOUT
LPR	LINE PROTECTION RELAY
LS	LIMIT SWITCH
M	MANUAL, METER, MAIN
MF	MULTIFUNCTION
MOD	MOTOR OPERATED DISCONNECT
N	NORMAL, NEUTRAL
O	OPEN
OCB	OIL CIRCUIT BREAKER
P	PRIMARY
PLC	POWER-LINE CARRIER
PS	PRESSURE SWITCH
Q	OIL
R	RAISE, RED, REMOTE
RCO	RECLOSER CUTOUT SWITCH
SCADA	SUPERVISORY CONTROL AND DATA ACQUISITION
SS	SYNCHRONIZING SWITCH
T	TEST, TRIP, TRANSFORMER
TC	TRIP COIL
TD	TIME DELAY
TD	TEMPERATURE RECORDER: T-TRANS. WINDING
T/R	TRANSMITTER/RECEIVER
TS	TEST SWITCH
W	WHITE
X	AUXILIARY RELAY
Y	AUXILIARY RELAY
Z	AUXILIARY RELAY

THE FOLLOWING COLORS REPRESENT UNLESS OTHERWISE NOTED:

- (GREEN LINE) EQUIPMENT WITH ITEMS TO BE REMOVED, REPLACED, OR DISPOSED OF BY CONTRACTOR
- (RED LINE) EQUIPMENT WITH ITEMS FURNISHED, INSTALLED AND/OR MODIFIED BY CONTRACTOR
- (BLUE LINE) GOVERNMENT FURNISHED EQUIPMENT INSTALLED BY CONTRACTOR UNDER THIS CONTRACT. (GFE)
- (BLACK LINE) EXISTING EQUIPMENT

NOTES:

1. CONDUITS AND BOXES ARE DIMENSIONED TO CENTERLINES UNLESS NOTED.
2. TYPICAL ITEMS SHOWN ON THIS DRAWINGS NOT ALL NECESSARILY REFERENCED ON FOLLOWING INDIVIDUAL DRAWINGS.
3. CONTROL DIAGRAMS SHOW CONTROL AND TRANSFER SWITCHES WITH CONTACTS IN THE DE-ENERGIZED POSITION OR WHEN QUANTITIES TO WHICH THEY RESPOND ARE OF THE LOWEST VALUE.
4. SYMBOLS, DEVICE NUMBERS AND LEGEND SHOWN ON THIS DRAWING ARE APPLICABLE FOR ALL DRAWINGS. HOWEVER, IF SYMBOLS, DEVICE NUMBERS AND LEGEND APPEAR ON AN INDIVIDUAL DRAWING AND DIFFERS FROM THIS DRAWING, THE INFORMATION ON THE INDIVIDUAL DRAWING SHALL GOVERN.
5. CONDUIT ROUTING SHOWN ON THESE DRAWINGS MAY NOT ABSOLUTELY BE THE MOST PRACTICABLE ROUTING; THEREFORE, SLIGHT MODIFICATION MAY BE MADE TO FACILITATE A BETTER INSTALLATION AFTER PERMISSION FROM THE CONTRACTING OFFICER'S REPRESENTATIVE HAS BEEN GRANTED.
6. THE ELECTRICAL DRAWINGS ARE BASED ON DRAWINGS PREPARED FOR THE PROCUREMENT OF GOVERNMENT FURNISHED EQUIPMENT AND MAY BE SUPERSEDED BY MANUFACTURER'S SHOP DRAWINGS WHEN AVAILABLE.
7. AT THIS PROJECT, THE ORIGINAL DRAWINGS USED AS "REFERENCE DRAWINGS" OFTEN REFER TO THE 'AUXILLIARY BUS" AS THE "TRANSFER BUS". IN THIS CONTRACT, THE SWITCHYARD USES A "MAIN BUS" AND AN "AUXILLIARY BUS".

SYMBOL	ZONE	DESCRIPTION	DATE	BY
1	D-1	GENERAL REVISIONS: AMENDMENT 0005	27 MAY 03	

REVISIONS

HYDROELECTRIC DESIGN CENTER
PORTLAND, OR

U.S. ARMY ENGINEER DISTRICT
CORPS OF ENGINEERS
SAVANNAH, GEORGIA

HARTWELL MAJOR REHABILITATION - PHASE 2
HARTWELL DAM AND LAKE
SWITCHYARD UPGRADE

NOTES & LEGEND

SAVANNAH RIVER GEORGIA AND S. CAROLINA

SIZE	SOLICITATION NO.	FILE NO.	PLATE
F	DACW21-03-B-0007	HAR0157	G-09

SCALE: | SHEET 9

HAP103TB.DGN HAP103G09.DGN

...\Har0157\amd5\HAP103G09.dgn 05/29/2003 08:28:04 AM

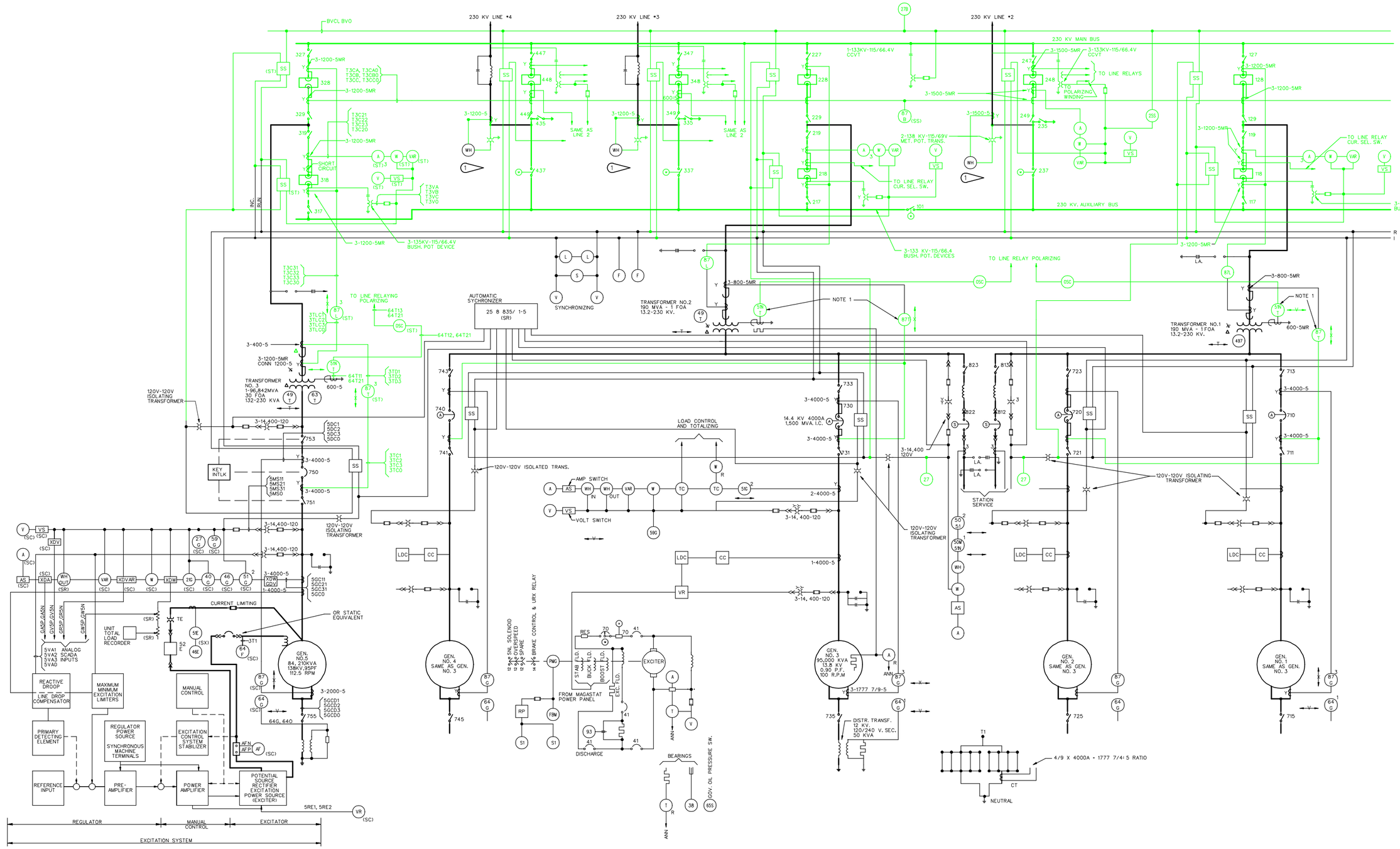

SYMBOLS:

- INDICATING INSTRUMENTS: A-AMPS, V-VOLTS, VAR-VARS, W-WATTS, F-FREQUENCY, S-SYNCHROSCOPE, WH-WATTHOUR, SI-SPEED INDICATOR
- INSTRUMENT TEST PLUG
- RECORDING INSTRUMENTS, VAR- VARS, W-WATTS, T-TEMPERATURE, F-FREQUENCY, V-VOLTS
- TC THERMAL CONVERTER
- INSTRUMENT SWITCH: A-AMMETER, VS-VOLTMETER SW, SS-SYNCHRONIZING SW
- RELAY NUMBER: ASA DEVICE FUNCTION NUMBER
- PMG PERMANENT MAGNET GENERATOR
- FBM FLY BALL MOTOR
- VR VOLTAGE REGULATOR
- LDC LINE DROP COMPENSATOR
- CC CROSS CURRENT COMPENSATOR
- RP RECTIFIER-RESISTOR PACK
- U25 SYNCHRONISM- LIVE BUS- DEAD LINE, LIVE LINE-DEAD BUS CHECK RELAY
- AIR CIRCUIT BREAKER, S-SOLENOID OPERATED, A-PNEUMATIC
- CURRENT TRANSFORMER
- BUSHING TYPE CURRENT TRANFORMER
- BUSHING POTENTIAL DEVICE
- SSG SPEED SIGNAL GENERATOR
- S1 SPEED INDICATOR
- XDW WATT TRANSDUCER
- EXISTING ELECTRICAL EQUIPMENT OR STRUCTURE
- NEW ADDITIONS
- ELECTRICAL EQUIPMENT OR STRUCTURE TO BE REMOVED

NOTES:

1. 87T/51NT RELAY FOR TRANSFORMERS 1 AND 2 SHALL BE RE-USED. SEE DRAWING E-02.

SYMBOL	ZONE	DESCRIPTION	DATE	BY
1	D-2	GENERAL REVISIONS: AMENDMENT 0005	27 MAY 03	

REVISIONS

HYDROELECTRIC DESIGN CENTER PORTLAND, OR

U.S. ARMY ENGINEER DISTRICT CORPS OF ENGINEERS SAVANNAH, GEORGIA

HARTWELL MAJOR REHABILITATION - PHASE 2
HARTWELL DAM AND LAKE
SWITCHYARD UPGRADE
MAIN ONE-LINE DIAGRAM
EQUIPMENT REMOVAL
SAVANNAH RIVER GEORGIA AND S. CAROLINA

SIZE	SOLICITATION NO.	FILE NO.	PLATE
F	DACW21-03-B-0007	HAR0157	E-01

SCALE: SHEET 17

HAP103TB.DGN HAP103E01.DGN

...\Har0157\amd5\HAP103E01.dgn 05/29/2003 08:31:58 AM

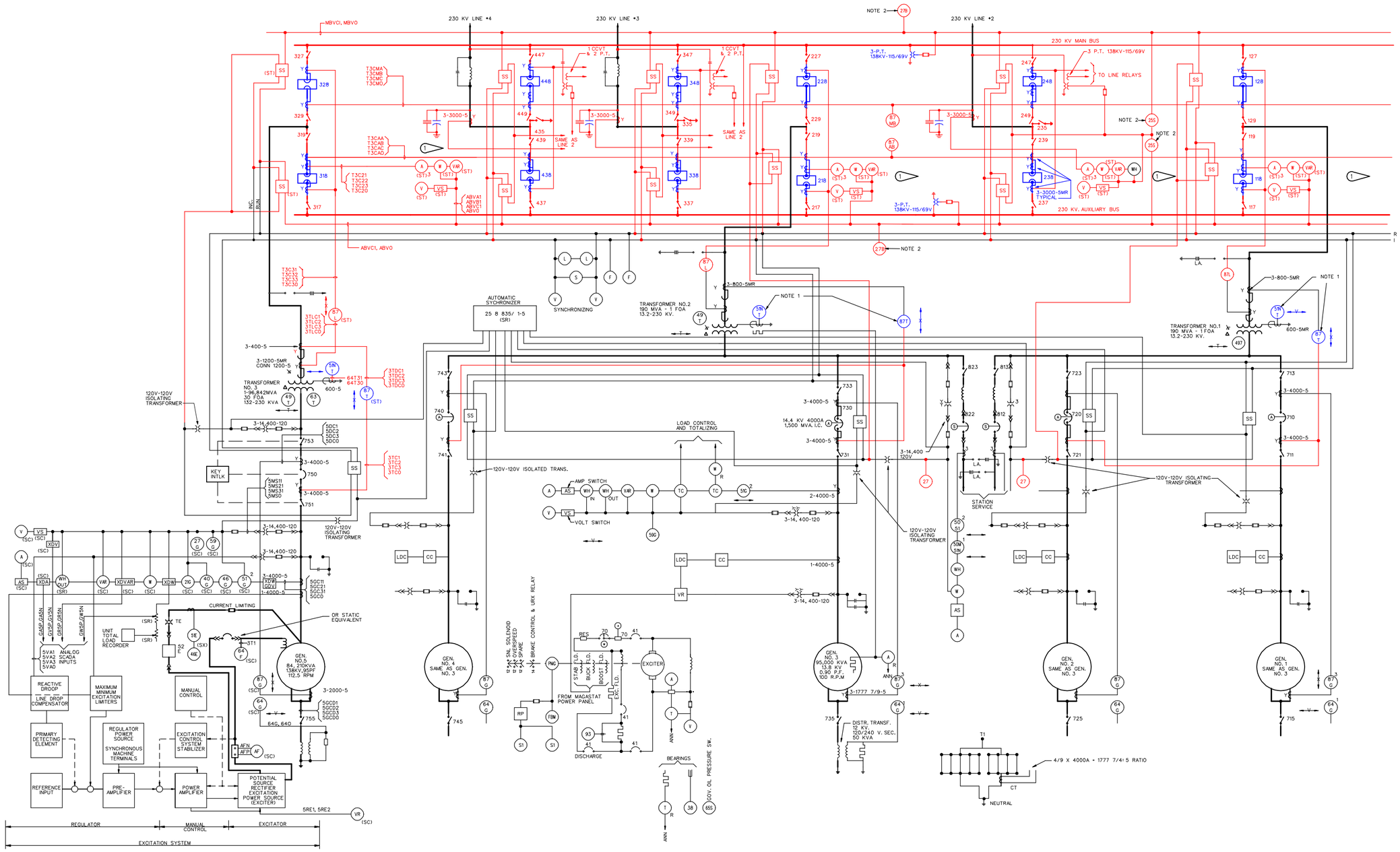

SYMBOLS:

- INDICATING INSTRUMENTS: A-AMPS, V-VOLTS, VAR-VARS, W-WATTS, F-FREQUENCY, S-SYNCHROSCOPE, WH-WATTHOUR, SI-SPEED INDICATOR, MF - MULTIFUNCTION
- TC THERMAL CONVERTER
- PMG PERMANENT MAGNET GENERATOR
- LDC LINE DROP COMPENSATOR
- U25 SYNCHRONISM- LIVE BUS- DEAD LINE, LIVE LINE-DEAD BUS CHECK RELAY
- BUSHING TYPE CURRENT TRANFORMER
- S1 SPEED INDICATOR
- NEW ADDITIONS
- SSC INSTRUMENT TEST PLUG
- INSTRUMENT SWITCH: A-AMMETER, VS-VOLTMETER SW, SS-SYNCHRONIZING SW
- FBM FLY BALL MOTOR
- CC CROSS CURRENT COMPENSATOR
- AIR CIRCUIT BREAKER, S-SOLENOID OPERATED, A-PNEUMATIC
- BUSHING POTENTIAL DEVICE
- XDW WATT TRANSDUCER
- ELECTRICAL EQUIPMENT OR STRUCTURE TO BE REMOVED
- RECORDING INSTRUMENTS, VAR- VARS, W-WATTS, T-TEMPERATURE, F-FREQUENCY, V-VOLTS
- RELAY NUMBER: ASA DEVICE FUNCTION NUMBER
- VR VOLTAGE REGULATOR
- RP RECTIFIER-RESISTOR PACK
- CURRENT TRANSFORMER
- SSG SPEED SIGNAL GENERATOR
- EXISTING ELECTRICAL EQUIPMENT OR STRUCTURE

NOTES:

1. 87T/51NT RELAY FOR TRANSFORMERS 1 AND 2 SHALL BE RE-USED. SEE DRAWING E-01.
2. THE 27B AND 25S FUNCTIONALITY SHALL BE IN THE MULTIFUNCTION LINE PROTECTION RELAYS.

SYMBOL	ZONE	DESCRIPTION	DATE	BY
1	D-2	GENERAL REVISIONS: AMENDMENT 0005	27 MAY 03	

REVISIONS

HYDROELECTRIC DESIGN CENTER
PORTLAND, OR

U.S. ARMY ENGINEER DISTRICT
CORPS OF ENGINEERS
SAVANNAH, GEORGIA

HARTWELL MAJOR REHABILITATION - PHASE 2
HARTWELL DAM AND LAKE
SWITCHYARD UPGRADE
MAIN ONE-LINE DIAGRAM
NEW EQUIPMENT
SAVANNAH RIVER GEORGIA AND S. CAROLINA

SIZE	SOLICITATION NO.	FILE NO.	PLATE
F	DACW21-03-B-0007	HAR0157	E-02

SCALE: SHEET 18

HAP103TB.DGN HAP103E02.DGN

...\Har0157\amd5\HAP103E02.dgn 05/29/2003 08:32:54 AM

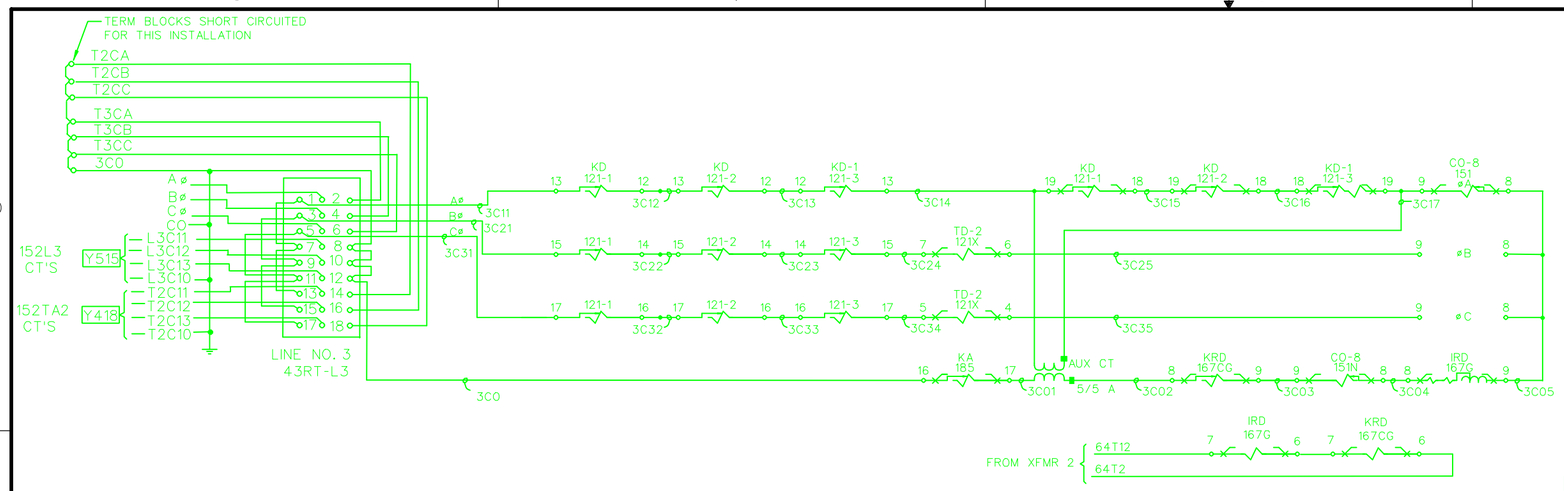

LINE NO. 3 RELAYING

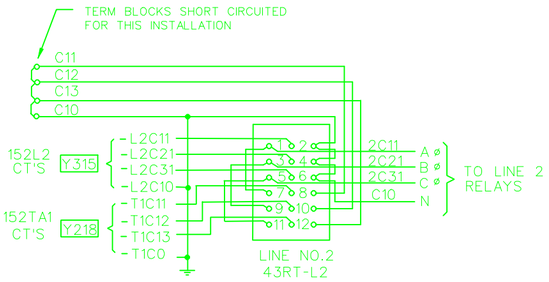

LINE NO. 2 RELAYING

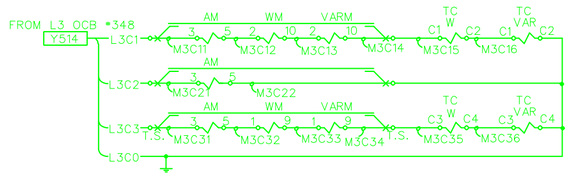

LINE NO. 3 CURRENT METERING

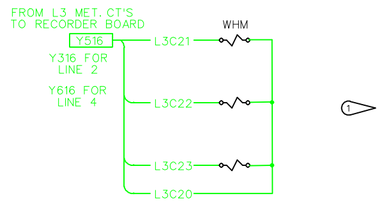

LINE NO. 3 CURRENT METERING (WHM'S)
(SIM. FOR LINES 2 & 4)

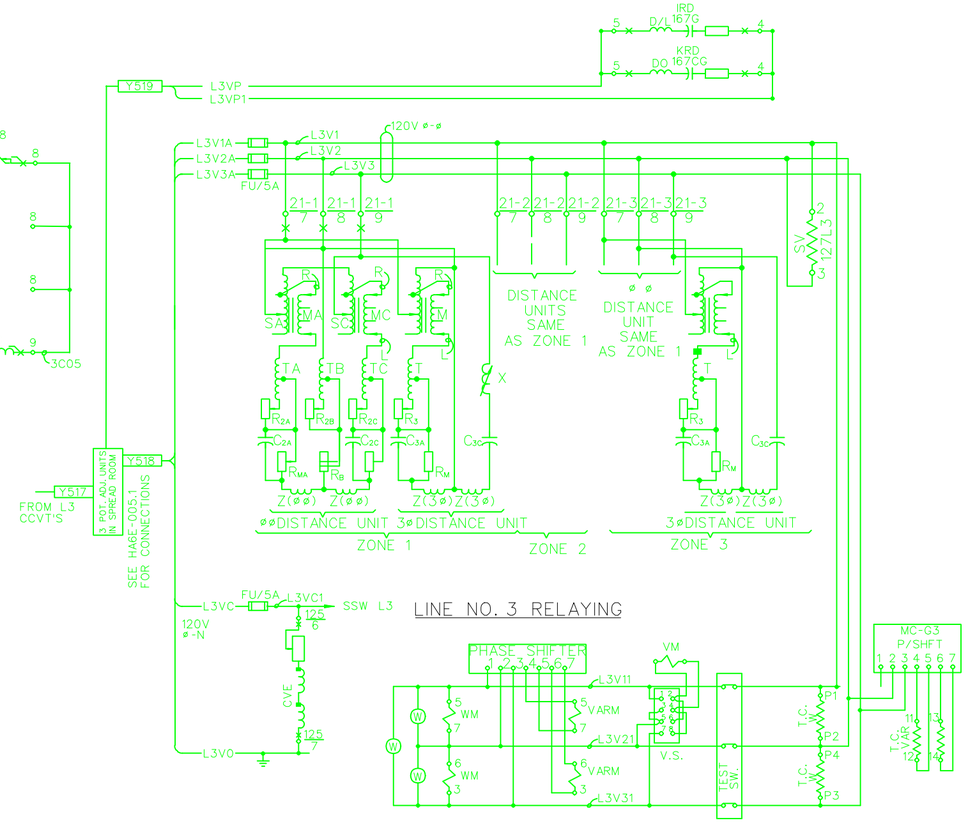

LINE NO. 3 RELAYING

LINE NO. 3 POTENTIAL METERING

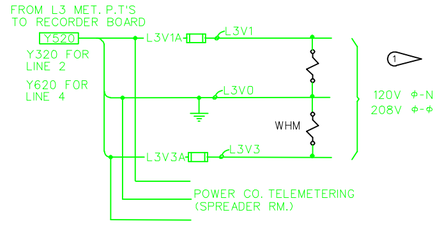

LINE NO. 3 POTENTIAL METERING (WHM'S)
(SIM. FOR LINES 2 & 4)

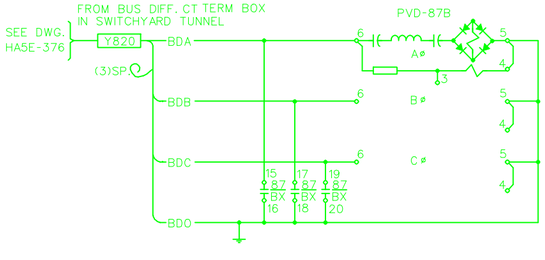

BUS DIFF. RELAYING CT'S.

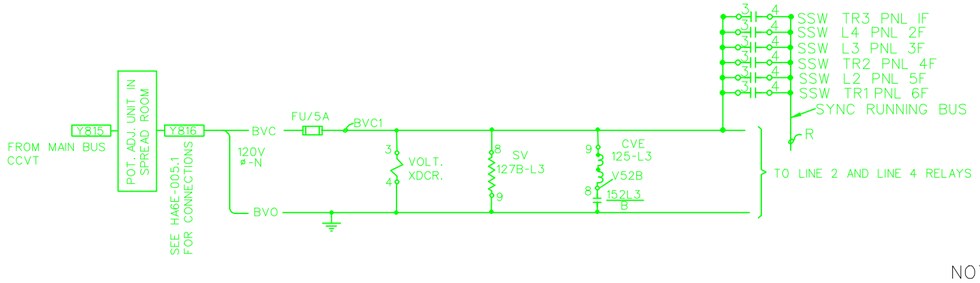

BUS POTENTIAL
ALL EQUIP. ON MAIN CONT. SWBD.

NOTES:

1. REFER TO LEGEND ON DRAWING G-09.

REFERENCE DRAWINGS:

KIRKHOF:

E1591, SH. 11 SCHEMATIC DIAGRAM 230 KV SWITCHYARD

UNIT ELECTRIC CONTROL:

7569C-2 AC ELEMENTARY WIRING DIAGRAM

SYMBOL	ZONE	DESCRIPTION	DATE	BY
1	B-1	GENERAL REVISIONS: AMENDMENT 0005	27 MAY 03	

REVISIONS

HYDROELECTRIC DESIGN CENTER PORTLAND, OR

U.S. ARMY ENGINEER DISTRICT CORPS OF ENGINEERS SAVANNAH, GEORGIA

HARTWELL MAJOR REHABILITATION - PHASE 2
HARTWELL DAM AND LAKE
SWITCHYARD UPGRADE
LINE METERING THREE-LINE DIAGRAM
EQUIPMENT REMOVAL
SAVANNAH RIVER GEORGIA AND S. CAROLINA

SIZE	SOLICITATION NO.	FILE NO.	PLATE
F	DACW21-03-B-0007	HAR0157	E-09

SCALE: SHEET 25

HAP103TB.DGN HAP103E09.DGN

...\Har0157\amd5\HAP103E09.dgn 05/29/2003 08:34:06 AM

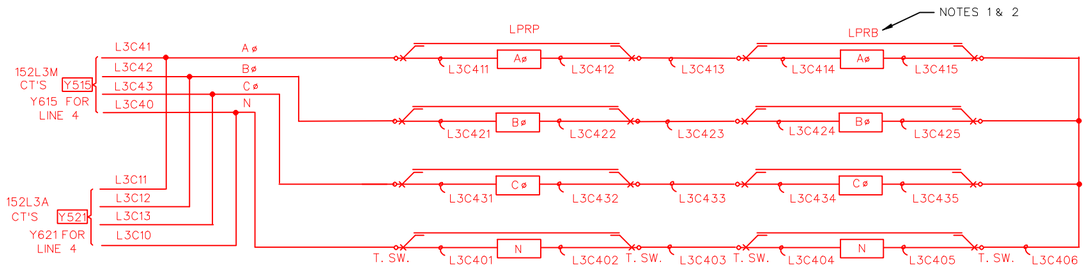

LINE NO. 3 RELAYING
(SIM. FOR LINE 4)

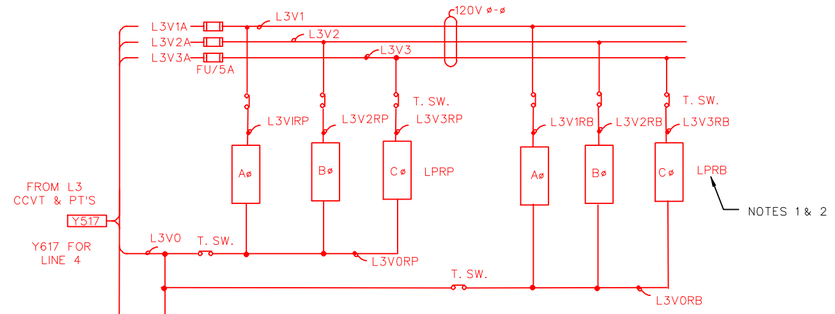

LINE NO. 3 RELAYING
(SIM. FOR LINE 4)

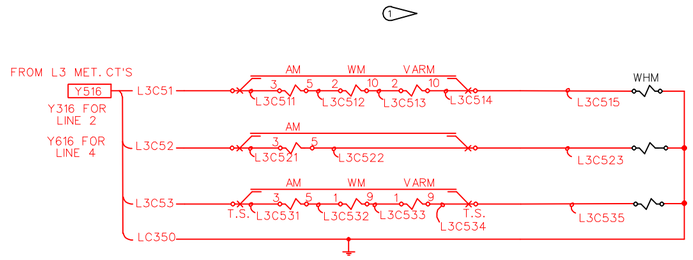

LINE NO. 3 CURRENT METERING
(SIM. FOR LINES 2 & 4)

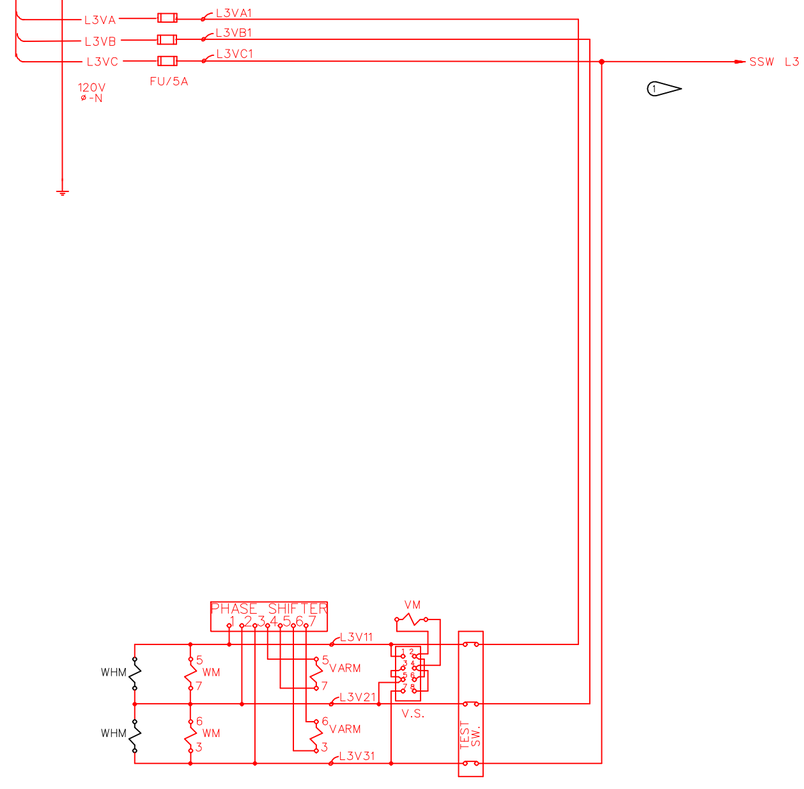

LINE NO. 3 POTENTIAL METERING
(SIM. FOR LINES 2 & 4)

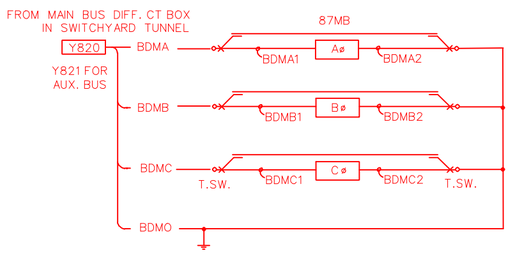

MAIN BUS DIFF. RELAYING CT'S.
(SIM. FOR AUX. BUS)

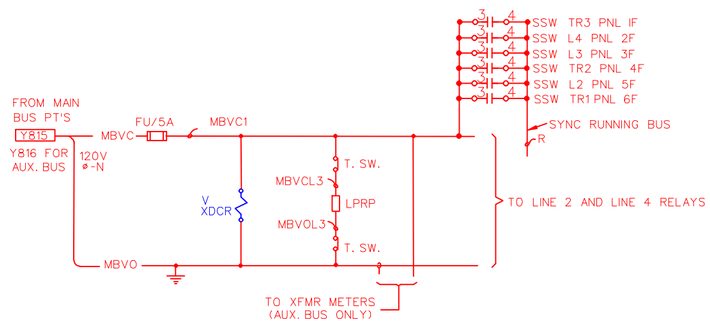

MAIN BUS POTENTIAL
(SIM. FOR AUX. BUS)

NOTES:

1. FOR LINE 2, EXISTING HCB AND LCB II RELAYS SHALL BE USED INSTEAD OF THE MULTIFUNCTION LPRB.
2. LPRB IS GFE FOR LINE 4.

SYMBOL	ZONE	DESCRIPTION	DATE	BY
1	C-3	GENERAL REVISIONS: AMENDMENT 0005	27 MAY 03	

REVISIONS

HYDROELECTRIC DESIGN CENTER
PORTLAND, OR

U.S. ARMY ENGINEER DISTRICT
CORPS OF ENGINEERS
SAVANNAH, GEORGIA

HARTWELL MAJOR REHABILITATION - PHASE 2
HARTWELL DAM AND LAKE
SWITCHYARD UPGRADE
LINE METERING THREE-LINE DIAGRAM
NEW EQUIPMENT
SAVANNAH RIVER GEORGIA AND S. CAROLINA

SIZE	SOLICITATION NO.	FILE NO.	PLATE
F	DACW21-03-B-0007	HAR0157	E-10

SCALE: SHEET 26

HAP103TB.DGN HAP103E10.DGN

...\Har0157\amd5\HAP103E10.dgn 05/29/2003 08:35:56 AM

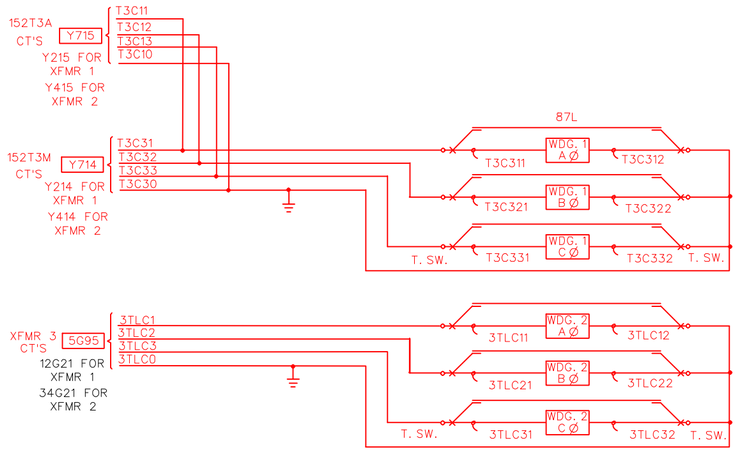

POWERHOUSE LINE NO. 3
DIFFERENTIAL RELAYING
(SIM. FOR POWERHOUSE LINES 1 & 2)

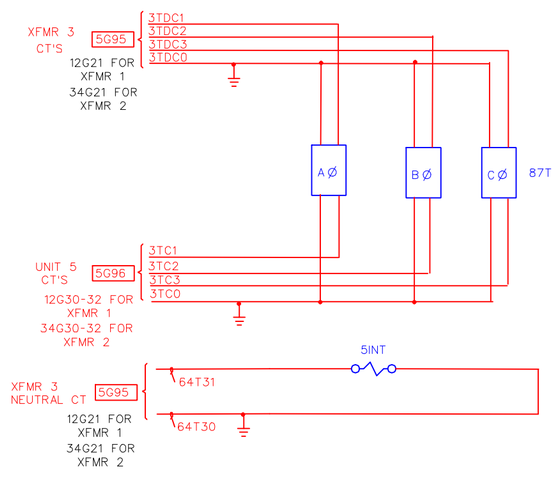

TRANSFORMER NO. 3 RELAYING
(SIM. FOR TRANSFORMERS 1 & 2)

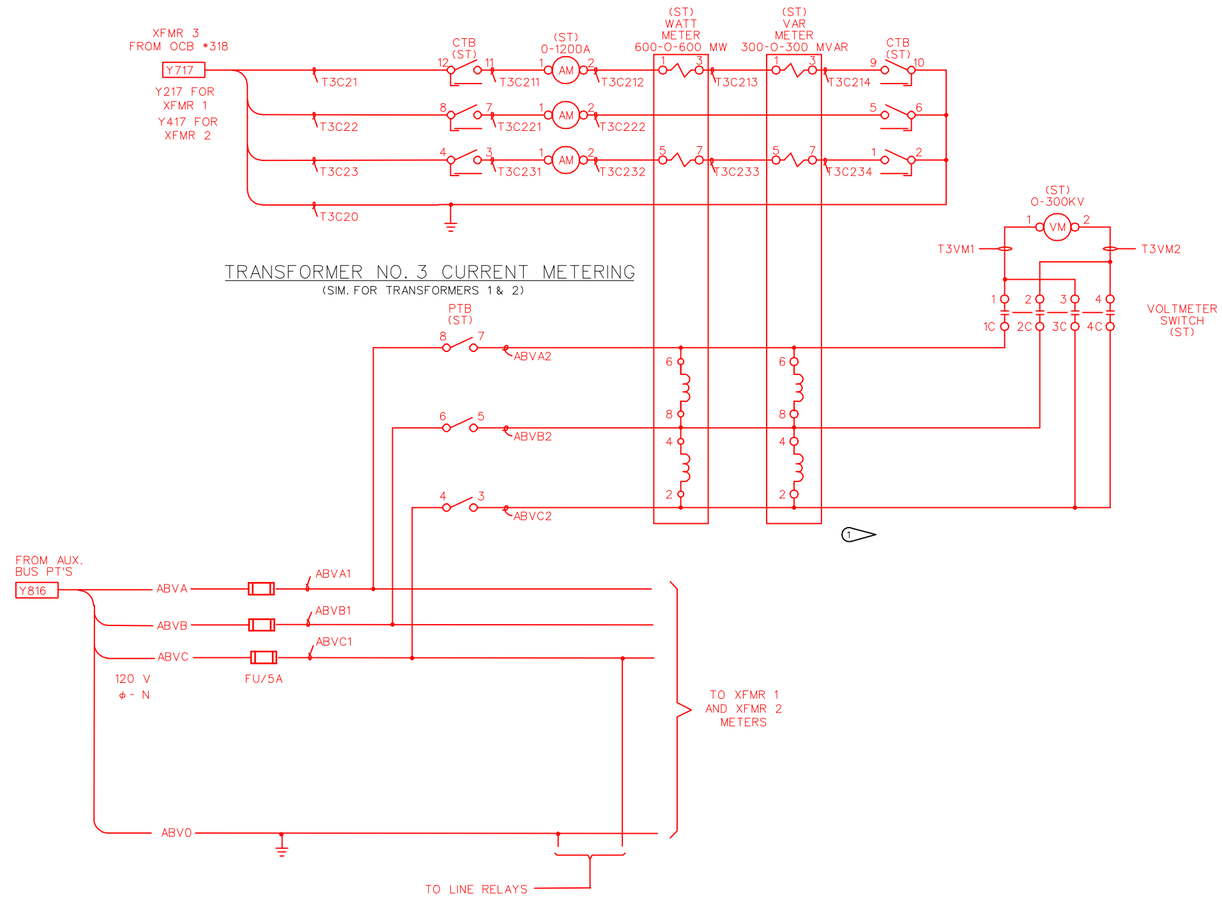

TRANSFORMER NO. 3 CURRENT METERING
(SIM. FOR TRANSFORMERS 1 & 2)

TRANSFORMER NO. 3 POTENTIAL METERING

NOTES:

1. REFER TO LEGEND ON DRAWING G-09.

SYMBOL	ZONE	DESCRIPTION	DATE	BY
1	C-2	GENERAL REVISIONS: AMENDMENT 0005	27 MAY 03	

REVISIONS

HYDROELECTRIC DESIGN CENTER
PORTLAND, OR

U.S. ARMY ENGINEER DISTRICT
CORPS OF ENGINEERS
SAVANNAH, GEORGIA

HARTWELL MAJOR REHABILITATION - PHASE 2
HARTWELL DAM AND LAKE
SWITCHYARD UPGRADE
XFMR. METERING THREE-LINE DIAGRAM
NEW EQUIPMENT
SAVANNAH RIVER GEORGIA AND S. CAROLINA

SIZE F | SOLICITATION NO. DACW21-03-B-0007 | FILE NO. HAR0157 | PLATE E-12

SCALE: | SHEET 28

HAP103TB.DGN HAP103E12.DGN

...\Har0157\amd5\HAP103E12.dgn 05/29/2003 08:36:59 AM

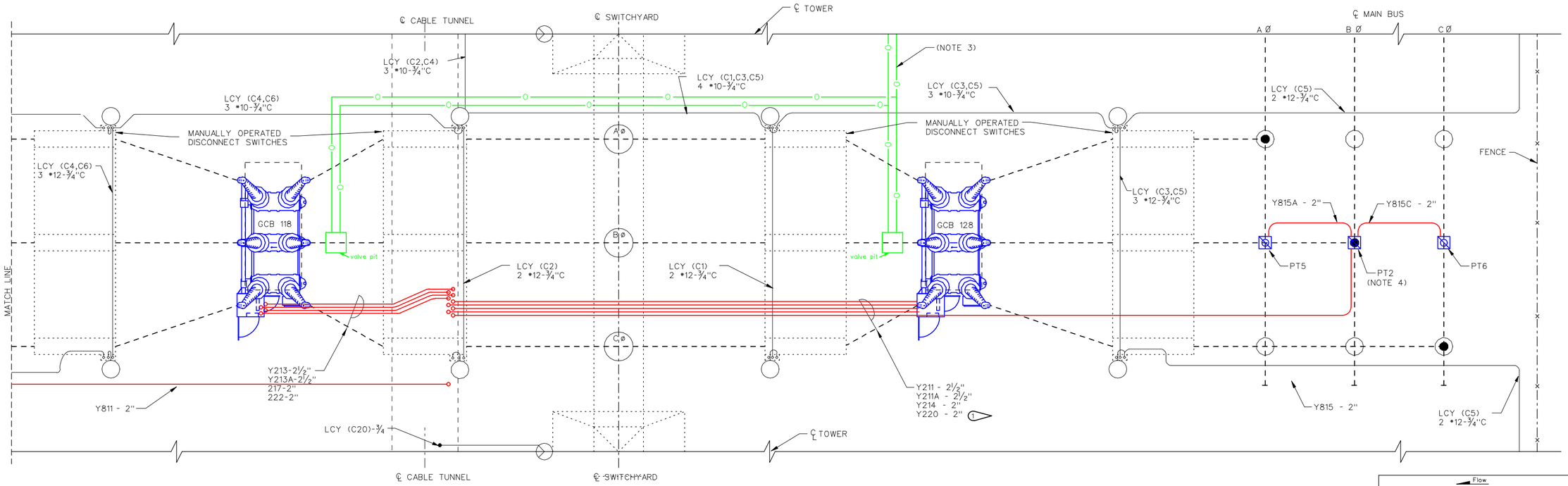

PLAN VIEW
BAY NO.2 - TRANS. NO.1

SCALE: 3/16" = 1'-0"
12"0 5' 10'

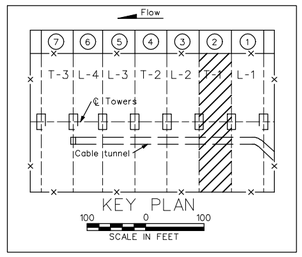

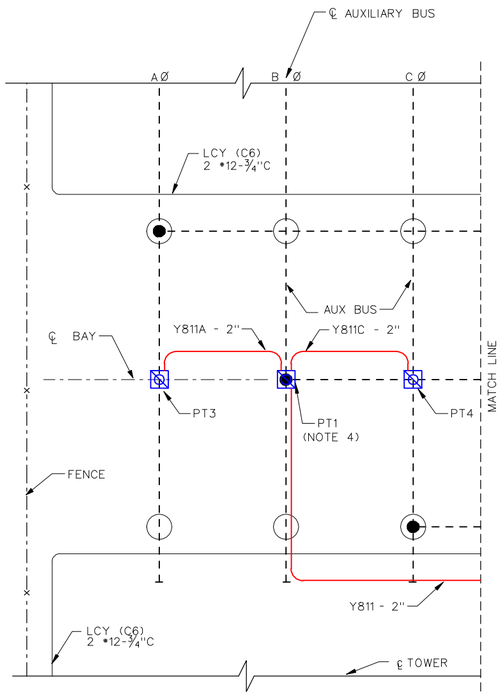

FLOW

NOTES:

1. EXISTING CONDUITS SHALL BE REMOVED AND NEW CONDUITS INSTALLED AS REQUIRED COORDINATION WITH CONDUIT AND CABLE SCHEDULE REQUIRED.
2. EXTREME CAUTION SHALL BE EXERCISED BY THE CONTRACTOR WHILE EXCAVATING EXISTING CONDUITS. LIGHTING AND GROUNDING CONDUCTORS MAY NOT BE WHERE EXISTING DRAWINGS SHOW. ANY DAMAGE CAUSED SHALL BE THE RESPONSIBILITY OF THE CONTRACTOR.
3. EXISTING OCB OIL PIPING SHALL BE REMOVED AS PER THE SPECIFICATIONS SECTION 16050.
4. SEE DRAWING E-41 AND E-42 EXISTING PT'S ARE RELOCATED ON NEW SUPPORTS UNDER THE ENDS OF THE MAIN AND AUXILLIARY BUS.

SYMBOL	ZONE	DESCRIPTION	DATE	BY
1	C-2	GENERAL REVISIONS: AMENDMENT 0005	27 MAY 03	

REVISIONS

HYDROELECTRIC DESIGN CENTER
PORTLAND, OR

U.S. ARMY ENGINEER DISTRICT
CORPS OF ENGINEERS
SAVANNAH, GEORGIA

HARTWELL MAJOR REHABILITATION - PHASE 2
HARTWELL DAM AND LAKE
SWITCHYARD UPGRADE
BAY 2
CONDUIT ROUTING
SAVANNAH RIVER GEORGIA AND S. CAROLINA

SIZE	SOLICITATION NO.	FILE NO.	PLATE
F	DACW21-03-B-0007	HAR0157	E-57

SCALE: SHEET 73

HAP103TB.DGN HAP103E57.DGN

...\Har0157\amd5\HAP103E57.dgn 05/29/2003 08:38:48 AM

BAY 4
XFMR 2

CONDUIT NUMBER	CONDUIT SIZE	CONDUIT LGTH	CABLE NUMBER	CABLE NO. COND.	CABLE GAUGE	CABLE INSUL	CABLE RUN LGTH	DESCRIPTION OP-VOLT	DESCRIPTION CABLE FUNCTION	DESCRIPTION FROM	DESCRIPTION TO	ROUTING AND REMARKS
Y411	2	68								OCB NO. 228 CNTL CAB	CABLE TUNNEL	
			Y411	12	19/25		740		TRANSFORMER NO. 2 MAIN BUS OCB CONTROL	OCB NO. 228 CNTL CAB	MAIN CNTL SWBD PNL 4F	Y411, TRAY DC7, DC5, AC34
1 Y411	2 1/2	68								GCB NO. 228 CNTL CAB	CABLE TUNNEL	
			Y411	12	12		740		TRANSFORMER NO. 2 MAIN BUS GCB CONTROL	GCB NO. 228 CNTL CAB	MAIN CNTL SWBD PNL 4F	Y411, TRAY DC7, DC5, AC34
			B32	2	10		850		TRANSFORMER NO. 2 MAIN BUS GCB DC POWER	OCB NO. 228 CNTL CAB	125 VDC DIST SWBD	TRAY DC03, 10, 11, Y411
			A61	5	12		740		ANNUNCIATION	GCB NO. 228 CNTL CAB	MAIN CNTL SWBD PNL 4F	TRAY DC11, Y411
1 Y411A	2 1/2	68							SPARE	GCB NO. 228 CNTL CAB	CABLE TUNNEL	
Y413	2 1/2	28								OCB NO. 218 CNTL CAB	CABLE TUNNEL	
			Y413	12	19/25		710		TRANSFORMER NO. 2 AUX BUS OCB CONTROL	OCB NO. 218 CNTL CAB	MAIN CNTL SWBD PNL 4F	Y413, TRAY DC7, DC5, AC34
Y413	2 1/2	28								GCB NO. 218 CNTL CAB	CABLE TUNNEL	
			Y413	12	12		710		TRANSFORMER NO. 2 AUX BUS GCB CONTROL	GCB NO. 218 CNTL CAB	MAIN CNTL SWBD PNL 4F	Y413, TRAY DC7, DC5, AC34
			B33	2	10		800		TRANSFORMER NO. 2 AUX BUS GCB DC POWER	GCB NO. 218 CNTL CAB	125 VDC DIST SWBD	TRAY DC03, 10, 11, Y413
			A60	5	12		710		ANNUNCIATION	GCB NO. 218 CNTL CAB	MAIN CNTL SWBD PNL 4F	TRAY DC11, Y413
Y413A	2 1/2	28							SPARE	GCB NO. 218 CNTL CAB	CABLE TUNNEL	
Y414	1 1/2	68								OCB NO. 228 CNTL CAB	CABLE TUNNEL	
			Y414	5	19/22		740		POWERHOUSE LINE DIFFERENTIAL RELAY CT LEADS	OCB NO. 228 CNTL CAB	MAIN CNTL SWBD PNL 4R	Y414, TRAY AC7, AC5
1 Y414	2	68								GCB NO. 228 CNTL CAB	CABLE TUNNEL	
			Y414	5	10		740		POWERHOUSE LINE DIFFERENTIAL RELAY CT LEADS	GCB NO. 228 CNTL CAB	MAIN CNTL SWBD PNL 4R	Y414, TRAY AC7, AC5
			Y415	5	10		105		POWERHOUSE LINE DIFFERENTIAL RELAY CT LEADS	GCB 218 CNTL CAB	GCB 228 CNTL CAB	Y414
			Y416	5	10		93		MAIN BUS DIFFERENTIAL RELAY CT LEADS	GCB NO. 228 CNTL CAB	MAIN BUS DIFF CT BOX Y4	Y416, TRAY AC8
Y415	1 1/2	85								OCB 218 CNTL CAB	CABLE TUNNEL	
			Y415	5	19/22		105		POWERHOUSE LINE DIFFERENTIAL RELAY CT LEADS	OCB 218 CNTL CAB	OCB 228 CNTL CAB	Y415
Y416	2	68								OCB NO. 228 CNTL CAB	CABLE TUNNEL	
			Y416	7	19/22		93		BUS DIFFERENTIAL RELAY CT LEADS	OCB NO. 228 CNTL CAB	BUS DIFF CT BOX Y4	Y416, TRAY AC8
Y417	1 1/2	28								OCB NO. 218 CNTL CAB	CABLE TUNNEL	
			Y417	5	19/22		710		TRANSFORMER NO. 2 METERING CT LEADS	OCB NO. 218 CNTL CAB	MAIN CNTL SWBD PNL 4F	Y417, TRAY AC7, AC5
1 Y417	2	28								GCB NO. 218 CNTL CAB	CABLE TUNNEL	
			Y417	5	10		710		TRANSFORMER NO. 2 METERING CT LEADS	GCB NO. 218 CNTL CAB	MAIN CNTL SWBD PNL 4F	Y414, TRAY AC7, AC5
			Y415	5	10		105		POWERHOUSE LINE DIFFERENTIAL RELAY CT LEADS	GCB 218 CNTL CAB	GCB 228 CNTL CAB	Y417, Y414
			Y418	5	10		60		AUX BUS DIFFERENTIAL RELAY CT LEADS	GCB NO. 218 CNTL CAB	AUX BUS DIFF CT BOX Y5	Y417, TRAY AC7, AC5
Y418	1 1/2	28								OCB NO. 218 CNTL CAB	CABLE TUNNEL	
			Y418	5	19/22		710		TRANSFORMER NO. 2 LINE RELAY CT LEADS	OCB NO. 218 CNTL CAB	MAIN CNTL SWBD PNL 3F	Y418, TRAY AC7, AC5

SYMBOL	ZONE	DESCRIPTION	DATE	BY
1	D-5	GENERAL REVISIONS: AMENDMENT 0005	27 MAY 03	

REVISIONS

HYDROELECTRIC DESIGN CENTER
PORTLAND, OR

U.S. ARMY ENGINEER DISTRICT
CORPS OF ENGINEERS
SAVANNAH, GEORGIA

HARTWELL MAJOR REHABILITATION - PHASE 2
HARTWELL DAM AND LAKE
SWITCHYARD UPGRADE
CONDUIT AND CABLE SCHEDULE
SHEET 6
SAVANNAH RIVER GEORGIA AND S. CAROLINA

SIZE F | SOLICITATION NO. DACW21-03-B-0007 | FILE NO. HAR0157 | PLATE E-79
SCALE: NONE | SHEET 95

103TBLK.HAP HAP103E79.DGN

...\Har0157\amd5\HAP103E79.dgn 05/29/2003 08:44:00 AM

BAY 4
XFMR 2

CONDUIT NUMBER	CONDUIT SIZE	CONDUIT LGTH	CABLE NUMBER	NO. COND.	GAUGE	INSUL	RUN LGTH	OP-VOLT	DESCRIPTION CABLE FUNCTION	FROM	TO	ROUTING AND REMARKS
Y419	2	28								OCB NO. 218 CNTL CAB	CABLE TUNNEL	
			Y419	9	19/22		710		TRANSFORMER NO. 2 METERING PT LEADS	OCB NO. 218 CNTL CAB	MAIN CNTL SWBD PNL 4F	Y419, TRAY AC7, AC5
Y420	1	68								OCB NO. 228 CNTL CAB	CABLE TUNNEL	
			Y420	4	10		300		TRANSFORMER NO. 2 MAIN BUS OCB AC POWER	OCB NO. 228 CNTL CAB	SWYD LOAD CENTER	Y420, TRAY AC7
1 Y420	2	68								GCB NO. 228 CNTL CAB	CABLE TUNNEL	
			Y420	2	10		95		TRANSFORMER NO. 2 MAIN BUS GCB AUXILLIARIES AC POWER	GCB NO. 228 CNTL CAB	SWYD LOAD CENTER	Y420, TRAY AC7
			Y420A	2	10		95		TRANSFORMER NO. 2 MAIN BUS GCB CAPACITIVE TRIP AC POWER	GCB NO. 228 CNTL CAB	SWYD LOAD CENTER	Y420, TRAY AC7
Y421	1	68								OCB NO. 228 CNTL CAB	CABLE TUNNEL	
			B32						TRANSFORMER NO. 2 MAIN BUS OCB DC POWER	OCB NO. 228 CNTL CAB	125 VDC DIST SWBD	SEE CABLE B32
Y422	1	28								OCB NO. 218 CNTL CAB	CABLE TUNNEL	
			Y422	4	10		200		TRANSFORMER NO. 2 AUX BUS OCB AC POWER	OCB NO. 218 CNTL CAB	SWYD LOAD CENTER	Y422, TRAY AC7
1 Y422	2	28								GCB NO. 218 CNTL CAB	CABLE TUNNEL	
			Y422	2	10		50		TRANSFORMER NO. 2 AUX BUS GCB AUXILLIARIES AC POWER	GCB NO. 218 CNTL CAB	SWYD LOAD CENTER	Y422, TRAY AC7
			Y422A	2	10		50		TRANSFORMER NO. 2 AUX BUS GCB CAPACITIVE TRIP AC POWER	GCB NO. 218 CNTL CAB	SWYD LOAD CENTER	Y422, TRAY AC7
Y423	1	28								OCB NO. 218 CNTL CAB	CABLE TUNNEL	
			B33						TRANSFORMER NO. 2 AUX BUS OCB DC POWER	OCB NO. 218 CNTL CAB	125 VDC DIST SWBD	SEE CABLE B33
Y424	2	28								OCB NO. 218 CNTL CAB	CABLE TUNNEL	
			Y424	7	19/25		92		MOD INTERLOCKS	OCB NO. 218 CNTL CAB	TERM BOX Y2	Y424, TRAY DC11
Y425	2	68								OCB NO. 228 CNTL CAB	CABLE TUNNEL	
			A61						ANNUNCIATION			SEE CABLE A61
Y426	2	68								OCB NO. 218 CNTL CAB	CABLE TUNNEL	
			A60						ANNUNCIATION			SEE CABLE A60

SYMBOL	ZONE	DESCRIPTION	DATE	BY
1	D-5	GENERAL REVISIONS: AMENDMENT 0005	27 MAY 03	

REVISIONS

HYDROELECTRIC DESIGN CENTER
PORTLAND, OR

U.S. ARMY ENGINEER DISTRICT
CORPS OF ENGINEERS
SAVANNAH, GEORGIA

HARTWELL MAJOR REHABILITATION - PHASE 2
HARTWELL DAM AND LAKE
SWITCHYARD UPGRADE
CONDUIT AND CABLE SCHEDULE
SHEET 7
SAVANNAH RIVER GEORGIA AND S. CAROLINA

SIZE F | SOLICITATION NO. DACW21-03-B-0007 | FILE NO. HAR0157 | PLATE E-80
SCALE: NONE | SHEET 96

103TBLK.HAP HAP103E80.DGN

...\Har0157\amd5\HAP103E80.dgn 05/29/2003 08:45:47 AM