INDEX OF DRAWINGS

PLATE NO.	SHEET NO.	CAD FILE NO.	TITLE		PLATE NO.	SHEET NO.	CAD FILE NO.	TITLE	
					E-32	48		NOT USED	
			SWITCHYARD UPGRADE DRAWINGS		E-33	49		NOT USED	
					E-34	50		NOT USED	
			GENERAL		E-35	51	HAP103E35	BREAKERS NO. 118 AND 128	CT CONNECTIONS
					E-36	52	HAP103E36	BREAKERS NO. 238 AND 248	CT CONNECTIONS
G-01	1	HAP103G01	COVER SHEET		E-37	53	HAP103E37	BREAKERS NO. 218 AND 228	CT CONNECTIONS
G-02	2	HAP103G02	DRAWING INDEX	SHEET ONE	E-38	54	HAP103E38	BREAKERS NO. 338 AND 348	CT CONNECTIONS
G-03	3	HAP103G03	DRAWING INDEX	SHEET TWO	E-39	55	HAP103E39	BREAKERS NO. 438 AND 448	CT CONNECTIONS
G-04	5	HAP103G04	PROJECT LOCATION	AND VICINITY MAP	E-40	56	HAP103E40	BREAKERS NO. 318 AND 328	CT CONNECTIONS
G-05	4	HAP103G05	PROJECT SITE MAP	AND GENERAL PLAN	E-41	57	HAP103E41	SWITCHYARD PLAN	EXISTING CONFIGURATION
G-06	6	HAP103G06	CONTRACTOR STAGING AREA	AND STORAGE PLAN	E-42	58	HAP103E42	SWITCHYARD PLAN	NEW CONFIGURATION
G-07	7	HAP103G07	WORK LOCATION	POWERHOUSE EL 515.0	E-43	59	HAP103E43	SWITCHYARD WORK SEQUENCE	PHASE 1 - PHASE 8
G-08	8	HAP103G08	WORK LOCATION	POWERHOUSE EL 498.5	E-44	60	HAP103E44	SWYD BAYS 2, 4, 7	EQUIPMENT REMOVAL
G-09	9	HAP103G09	NOTES AND LEGEND		E-45	61	HAP103E45	SWYD BAYS 2, 4, 7	NEW EQUIPMENT
G-10	10	HAP103G10	NOMENCLATURE		E-46	62	HAP103E46	SWITCHYARD BAY 3	EQUIPMENT REMOVAL
					E-47	63	HAP103E47	SWITCHYARD BAY 3	NEW EQUIPMENT
			STRUCTURAL		E-48	64	HAP103E48	SWITCHYARD BAYS 5, 6	EQUIPMENT REMOVAL
					E-49	65	HAP103E49	SWITCHYARD BAYS 5, 6	NEW EQUIPMENT
S-01	11	HAP103S01	STRUCTURAL GENERAL NOTES		E-50	66		NOT USED	
S-02	12	HAP103S02	DEMOLITION		E-51	67		NOT USED	
S-03	13	HAP103S03	FOUNDATION AND TOP STEEL FRAMING PLAN		E-52	68	HAP103E52	BAY 3 LINE 2	EXISTING AND NEW EQUIPMENT
S-04	14	HAP103S04	STRUCTURAL DETAILS	SHEET 1	E-53	69	HAP103E53	BAYS 5 AND 6, LINES 2 AND 3	EXISTING AND NEW EQUIPMENT
S-05	15	HAP103S05	STRUCTURAL DETAILS	SHEET 2	E-54	70	HAP103E54	VIEWS AND DETAILS	SHEET ONE
S-06	16	HAP103S06	STRUCTURAL DETAILS	SHEET 3	E-55	71	HAP103E55	VIEWS AND DETAILS	SHEET TWO
S-07	16A	HAP103S07	PT STEEL SUPORT FOUNDATION	PLAN AND DETAILS	E-56	72	HAP103E56	SWITCHYARD TUNNEL	CONDUIT ROUTING
S-08	16B	HAP103S08	STRUCTURAL DETAILS		E-57	73	HAP103E57	BAY TWO	CONDUIT ROUTING
					E-58	74	HAP103E58	BAY THREE	CONDUIT ROUTING
					E-59	75	HAP103E59	BAY FOUR	CONDUIT ROUTING
			ELECTRICAL		E-60	76	HAP103E60	BAY FIVE	CONDUIT ROUTING
					E-61	77	HAP103E61	BAY SIX	CONDUIT ROUTING
E-01	17	HAP103E01	MAIN ONE-LINE DIAGRAM	EQUIPMENT REMOVAL	E-62	78	HAP103E62	BAY SEVEN	CONDUIT ROUTING
E-02	18	HAP103E02	MAIN ONE-LINE DIAGRAM	NEW EQUIPMENT	E-63	79		NOT USED	
E-03	19	HAP103E03	MAIN THREE-LINE, BAYS 2 AND 3	EQUIPMENT REMOVAL	E-64	80		NOT USED	
E-04	20	HAP103E04	MAIN THREE-LINE, BAYS 2 AND 3	NEW EQUIPMENT	E-65	81	HAP103E65	KIRK KEY INTERLOCK DIAGRAM	
E-05	21	HAP103E05	MAIN THREE-LINE, BAYS 4 AND 5	EQUIPMENT REMOVAL	E-66	82	HAP103E66	SWITCHYARD GROUNDING PLAN	
E-06	22	HAP103E06	MAIN THREE-LINE, BAYS 4 AND 5	NEW EQUIPMENT	E-67	83	HAP103E67	SWITCHYARD POWER	480 / 208 VAC TRANSFORMER
E-07	23	HAP103E07	MAIN THREE-LINE, BAYS 6 AND 7	EQUIPMENT REMOVAL	E-68	84	HAP103E68	PANELS 6F & 6R	CONNECTION DIAGRAMS
E-08	24	HAP103E08	MAIN THREE-LINE, BAYS 6 AND 7	NEW EQUIPMENT	E-69	85	HAP103E69	PANELS 5F & 5R	CONNECTION DIAGRAMS
E-09	25	HAP103E09	LINE METERING THREE-LINE DIAGRAM	EQUIPMENT REMOVAL	E-70	86	HAP103E70	PANELS 4F & 4R	CONNECTION DIAGRAMS
E-10	26	HAP103E10	LINE METERING THREE-LINE DIAGRAM	NEW EQUIPMENT	E-71	87	HAP103E71	PANELS 3F & 3R	CONNECTION DIAGRAMS
E-11	27	HAP103E11	XFMR METERING THREE-LINE DIAGRAM	EQUIPMENT REMOVAL	E-72	88	HAP103E72	PANELS 2F & 2R	CONNECTION DIAGRAMS
E-12	28	HAP103E12	XFMR METERING THREE-LINE DIAGRAM	NEW EQUIPMENT	E-73	89	HAP103E73	PANELS 1F & 1R	CONNECTION DIAGRAMS
E-13	29	HAP103E13	LINE AND BUS RELAYING	EQUIPMENT REMOVAL	E-74	90	HAP103E74	CONDUIT AND CABLE SCHEDULE	SHEET 1
E-14	30	HAP103E14	LINE AND BUS RELAYING	NEW EQUIPMENT	E-75	91	HAP103E75	CONDUIT AND CABLE SCHEDULE	SHEET 2
E-15	31	HAP103E15	TRANSFORMER RELAYING, SH.1	EQUIPMENT REMOVAL	E-76	92	HAP103E76	CONDUIT AND CABLE SCHEDULE	SHEET 3
E-16	32	HAP103E16	TRANSFORMER RELAYING, SH.2	EQUIPMENT REMOVAL	E-77	93	HAP103E77	CONDUIT AND CABLE SCHEDULE	SHEET 4
E-17	33	HAP103E17	TRANSFORMER RELAYING, SH.1	NEW EQUIPMENT	E-78	94	HAP103E78	CONDUIT AND CABLE SCHEDULE	SHEET 5
E-18	34	HAP103E18	TRANSFORMER RELAYING, SH.2	NEW EQUIPMENT	E-79	95	HAP103E79	CONDUIT AND CABLE SCHEDULE	SHEET 6
E-19	35	HAP103E19	BREAKER SYNCHRONIZING SCHEMATIC	EQUIPMENT REMOVAL	E-80	96	HAP103E80	CONDUIT AND CABLE SCHEDULE	SHEET 7
E-20	36	HAP103E20	BREAKER SYNCHRONIZING SCHEMATIC	NEW EQUIPMENT	E-81	97	HAP103E81	CONDUIT AND CABLE SCHEDULE	SHEET 8
E-21	37	HAP103E21	BREAKER & MOD SCHEMATICS, SH.1	EQUIPMENT REMOVAL	E-82	98	HAP103E82	CONDUIT AND CABLE SCHEDULE	SHEET 9
E-22	38	HAP103E22	BREAKER & MOD SCHEMATICS, SH.2	EQUIPMENT REMOVAL	E-83	99	HAP103E83	CONDUIT AND CABLE SCHEDULE	SHEET 10
E-23	39	HAP103E23	BREAKER CONTROL SCHEMATICS, SH.1	NEW EQUIPMENT	E-84	100	HAP103E84	CONDUIT AND CABLE SCHEDULE	SHEET 11
E-24	40	HAP103E24	BREAKER CONTROL SCHEMATICS, SH.2	NEW EQUIPMENT	E-85	101	HAP103E85	CONDUIT AND CABLE SCHEDULE	SHEET 12
E-25	41	HAP103E25	ANNUNCIATOR SCHEDULE	EQUIPMENT REMOVAL	E-86	102	HAP103E86	CONDUIT AND CABLE SCHEDULE	SHEET 13
E-26	42	HAP103E26	ANNUNCIATOR SCHEDULE	NEW EQUIPMENT	E-87	103	HAP103E87	CONDUIT AND CABLE SCHEDULE	SHEET 14
E-27	43	HAP103E27	MAIN CONTROL BOARD	EQUIPMENT REMOVAL	E-88	104	HAP103E88	CONDUIT AND CABLE SCHEDULE	SHEET 15
E-28	44	HAP103E28	MAIN CONTROL BOARD	NEW EQUIPMENT	E-89	105	HAP103E89	CONDUIT AND CABLE SCHEDULE	SHEET 16
E-29	45	HAP103E29	MAIN RELAY BOARD	EQUIPMENT REMOVAL	E-90	106	HAP103E90	CONDUIT AND CABLE SCHEDULE	SHEET 17
E-30	46	HAP103E30	MAIN RELAY BOARD	NEW EQUIPMENT	E-91	107	HAP103E91	CONDUIT AND CABLE SCHEDULE	SHEET 18
E-31	47	HAP103E31	RECORDER BOARD	EQUIPMENT REMOVAL	E-92	108	HAP103E92	CONDUIT AND CABLE SCHEDULE	SHEET 19

STANDARD ABBREVIATIONS

A	
A.C.	AIR CONDITIONED
A.D.	AREA DRAIN
A.H.U.	AIR HANDLING UNIT
ALT.	ALTERNATE
ALUM.	ALUMINUM
AMP., A.	AMPERES
A.O.	ACCESS OPENING
APPROX.	APPROXIMATELY
ARCH.	ARCHITECTURAL
A.T.	ASPHALT TILE
A.T.C.	ACOUSTIC TILE CEILING
B	
BAL.	BALANCE
BD.	BOARD
BLDG.	BUILDING
BLK.	BLANK
BM.	BEAM
BOT.	BOTTOM
BRG.	BEARING
B.T.U.H.	BRITISH THERMO UNIT/HOUR
C	
CAB.	CABINET
CAP.	CAPACITY
C/B	CIRCUIT BREAKER
C.D.	CEILING DIFFUSER
CEM.	CEMENT
CER.	CERAMIC
C.F.M.	CUBIC FEET/MINUTE
CIRC.	CIRCULATING
C.J.	CONTROL JOINT
CK'D	CHECKERED
CKT.	CIRCUIT
℄	CENTER LINE
CEIL.	CEILING
CL.	CLOSET
C.M.U.	CONCRETE MASONRY UNIT
C.O.	CLEAN OUT
COL.	COLUMN
CONC.	CONCRETE
COND.	CONDENSATE
CONN.	CONNECTION
CONST.	CONSTRUCTION
CONT.	CONTINUOUS
CONTR. JT.	CONTRACTION JOINT
C.T.	CERAMIC TILE
C.T.B.	CERAMIC TILE BASE
C. TO C.	CENTER TO CENTER
D	
DET.	DETAIL
DIA.	DIAMETER
DIFF.	DIFFUSER
DIM.	DIMENSION
DISC.	DISCONNECT
D.J.	DUMMY JOINT
DN.	DOWN
DR.	DRAIN
D.S.	DOWN SPOUT
DWG.(S)	DRAWING(S)
E	
EA.	EACH
E.C.	EMPTY CONDUIT
E.F.	EXHAUST FAN
EL.	ELEVATION
ELEC.	ELECTRIC
EQUIP.	EQUIPMENT
E.W.C.	ELECTRIC WATER COOLER
EXH.	EXHAUST
EXP. JT.	EXPANSION JOINT
EXT.	EXTERIOR
EXIST.	EXISTING
F	
F.A.	FIRE ALARM
F.C.	FLEXIBLE CONNECTION
F.D.	FLOOR DRAIN
F.E.C.	FIRE EXTINGUISHER CABINET
FIN.	FINISH
FL.	FLOOR
FT.	FOOT, FEET
FTG.	FOOTING
G	
GA.	GAGE
GAL.	GALLON
GALV.	GALVANIZED
G.F.E.	GOVERNMENT FURNISHED EQUIPMENT
GL.	GLASS
GND.	GROUND
GOV'T	GOVERNMENT
G.P.H.	GALLONS/HOUR
G.P.M.	GALLONS/MINUTE
GR.	GRILLE
G.W.B.	GYPSUM WALL BOARD
GYP.	GYPSUM
H	
H.	HIGH
H.B.	HOSE BIBB
H.C.	HOLLOW CORE
HT.	HEIGHT
H.M.	HOLLOW METAL
H.P.	HORSE POWER
HR.	HOUR
HTG.	HEATING
HTR.	HEATER
H.&V.	HEATING AND VENTILATING
HW.	HARDWARE
HYD.	HYDRANT
I	
I.D.	INSIDE DIAMETER
I.E.	INVERT ELEVATION
IN.	INCHES
INCAND.	INCANDESCENT
INSUL.	INSULATION
INT.	INTERIOR
J	
J.B.	JUNCTION BOX
JCT.	JUNCTION
JT.	JOINT
K	
KVA	KILOVOLT AMPERE
KW	KILOWATT
L	
LB.,•	POUND
L.G.	LONG
L.P.	LIGHTING PANEL
LTG.	LIGHTING
M	
M.	MOTOR
MAINT.	MAINTENANCE
MAX.	MAXIMUM
M.D.P.	MAIN DISTRIBUTION PANEL
MECH.	MECHANICAL
MTL.	METAL
MIN.	MINIMUM
MISC.	MISCELLANEOUS
M.O.	MASONRY OPENING
M.T.	METAL THRESHOLD
MTD.	MOUNTED
MTG.	MOUNTING
M.V.	MECHANICAL VENTILATION
M.G.T.	MATT GLAZE TILE
N	
N.A.	NOT APPLICABLE
N.I.C.	NOT IN CONTRACT
NO.	NUMBER
O	
O.A.	OUTDOOR AIR
O.C.	ON CENTER
O.D.	OUTSIDE DIAMETER
OH.	OVERHEAD
OL.	OVERLOAD
OPNG.	OPENING
OPP.	OPPOSITE
O.S.D.	OPEN SIGHT DRAIN
P	
P.	PAPER
PART.	PARTITION
PER.	PERIMETER
ℙ, PL.	PLATE
PLBG.	PLUMBING
PLY'W'D	PLYWOOD
PNL.	PANEL
PRESS.	PRESSURE
PSF	POUNDS/SQUARE FOOT
PSI	POUNDS/SQUARE INCH
PSIG	POUNDS/SQUARE INCH GAGE
PT.	POINT
PTD.	PAINTED
Q	
QTR.	QUARTER
QUAN.	QUANTITY
R	
R.	RISER
R.A.	RETURN AIR
RAD.	RADIUS
RD.	ROUND
REC'D.	RECESSED
RECIRC.	RECIRCULATING
RECP.	RECEPTACLE
REG.	REGISTER
REINF.	REINFORCING
REQ'D.	REQUIRED
RET.	RETURN
R.G.	RETURN GRILLE
RM.	ROOM
R.P.M.	REVOLUTION/MINUTE
S	
S.	SUPPLY
S.A.	SUPPLY AIR
SCH.	SCHEDULE
SECT.	SECTION
SERV.	SERVICE
SHT.	SHEET
S.J.	SLIP JOINT
SPEC.	SPECIFICATIONS
SQ. FT.	SQUARE FEET
ST.	STEEL
STOR.	STORAGE
STRUC.	STRUCTURAL
SUSP.	SUSPENDED
SW.	SWITCH
T	
T.	TOILET
TEL.	TELEPHONE
TEMP.	TEMPERATURE
THK.	THICKNESS
THD.	THRESHOLD
TOIL.	TOILET
TYP.	TYPICAL
V	
V.	VOLT
V.A.T.	VINYL ASBESTOS TILE
VENT.	VENTILATION
VERT.	VERTICAL
VTR	VENT THRU ROOF
W	
W.	WATT
W/	WITH
WD.	WOOD
W.D.	WINDOW DIMENSION
WF	WIDE FLANGE
W.G.	WATER GAGE
WP.	WEATHERPROOF
WTR.	
W.W.F.	WELDED WIRE FABRIC

SECTION SYMBOLS

SECTIONS OR ELEVATIONS REFERING TO A DRAWING IN SAME SERIES OF DRAWINGS IS SHOWN THUS:

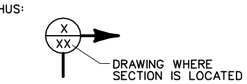

SECTION OR ELEVATION SHOWN ON SAME DRAWING IS SHOWN THUS:

MATERIAL INDICATIONS

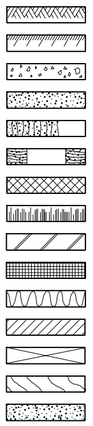

SYMBOL	ZONE	REVISIONS: DESCRIPTION	DATE	BY
	C-5	REVISED IN ACCORDANCE WITH AMENDMENT NO. 0002	18 APR 03	

HYDROELECTRIC DESIGN CENTER
PORTLAND, OR

U.S. ARMY ENGINEER DISTRICT
CORPS OF ENGINEERS
SAVANNAH, GEORGIA

HARTWELL MAJOR REHABILITATION - PHASE 2
HARTWELL DAM AND LAKE
SWITCHYARD UPGRADE
DRAWING INDEX
SHEET 1
SAVANNAH RIVER GEORGIA AND S. CAROLINA

SIZE	INVITATION NO.	FILE NO.	PLATE
F	DACW21-03-B-0007	HAR0157	G-02

SCALE: NONE SHEET 2

HAP103TB.DGN HAP103G02.DGN

...\ebs_dgn\Har0157\HAP103G02.dgn 04/28/2003 03:39:02 PM

INDEX OF DRAWINGS (CONTINUATION)

PLATE NO.	SHEET NO.	CAD FILE NO.	TITLE	
			REFERENCE DRAWINGS	
			ARRANGEMENT	
R-1	109	HA5A-405.1	PLAN EL. 498.5	SHEET 1
R-2	110	HA5E-264	PLAN EL. 498.5	
R-3	111	HA5A-407.1	PLAN EL. 512 AND 515	SHEET 1
			ELECTRICAL	
R-4	112	HA5E-007.3	CONTROL SCHEMATICS	GENERATING UNITS 1-4 AND XFMR'S
R-5	113	HA5E-009.3	SWITCHYARD SCHEMATIC DIAGRAM	
R-6	114	HA5E-010.7	STATION SERVICE	CONTROL SCHEMATIC DIAGRAM
R-7	115	HA5E-014.2	GENERATOR FULL LINE DIAGRAM	
R-8	116	HA5E-015.2	MAIN AND AUXILIARY TRANSFORMER	FULL LINE DIAGRAM
R-9	117	HA5E-017.2	ANNUNCIATOR SCHEMATIC DIAGRAM	
R-10	118	HA5E-210.6	125 VDC AND 120 VAC SINGLE PHASE	DISTRIBUTION SWITCHBOARD
R-11	119	HA5E-211.4	PROJECT OFFICE TRANS. AND SWITCHGEAR	& LOAD CENTERS
R-12	120	HA5E-219.1	SPREADING ROOM TRAY ARRANGEMENT	SHEET 1
R-13	121	HA5E-220.1	SPREADING ROOM TRAY ARRANGEMENT	SHEET 2
R-14	122	HA5E-221.1	SPREADING ROOM TRAY ARRANGEMENT	SHEET 3
R-15	123	HA5E-227.1	CABLE TUNNEL TO SWITCHYARD	TRAY ARRANGEMENT-SHEET 1
R-16	124	HA5E-228.1	CABLE TUNNEL TO SWITCHYARD	TRAY ARRANGEMENT-SHEET 2
R-17	125	HA5E-229.1	CABLE TUNNEL TO SWITCHYARD	TRAY ARRANGEMENT-SHEET 3
R-18	126	HA5E-348	125 VDC AND 120 VAC SINGLE PHASE	ONE LINE DIAGRAM
R-19	127	HA5E-349	GENERATOR NO. 5 AND XFMR NO. 3	SCHEMATIC DIAGRAM SHEET 1
R-20	128	HA5E-352	BREAKER SYNCHRONIZING	SCHEMATIC DIAGRAM
R-21	129	HA5E-356	ANNUNCIATOR SCHEMATIC DIAGRAM	UNITS 1-4
R-22	130	HA5E-357	ANNUNCIATOR SCHEMATIC DIAGRAM	UNIT 5
R-23	131	HA5E-365	RECORDER BOARD	
R-24	132	HA5E-366	MAIN CONTROL SWITCHBOARD	
R-25	133	HA5E-368	GEN., EXCITER AND MISC., TERM.	BOX CONNECTION DIAGRAM
R-26	134	HA5E-372	MISC. EXTERNAL CONNECTIONS	
R-27	135	HA5E-373	TRANSFORMER NO. 3 SWITCHBOARD	EXTERNAL CONNECTIONS
R-28	136	HA5E-376	FULL LINE DIAGRAM SWITCHYARD	
R-29	137	HA5E-377	GENERAL ARRANGEMENT SWITCHYARD	
R-30	138	HA5E-382	SWITCHYARD EXTERNAL CONNECTIONS	
R-31	139	HA5E-413.1	MAIN ONE LINE DIAGRAM	
R-32	140	HA6E-004.2	CONNECTION AND WIRING DIAGRAM	OCB'S AND MOD'S
R-33	141	HA6E-005.1	CONNECTION AND WIRING DIAGRAM	PTS, CTS, COUP. CAP, & MISC. EQUIP.
R-34	142	lcb2&hcb-3	LCB II AND HCB	DC ELEMENTARY
R-35	143	lcb2&hcb-5	LINE 2 REAR SWITCHBOARD PANEL	WIRING DIAGRAM
			KIRKHOF ELECTRIC CO.	
R-36	144	E1591, SH.11	SCHEMATIC DIAGRAM	230 KV SWITCHYARD
R-37	145	E1592, SH.16	WIRING DIAGRAM LINE NO. 3	PANELS 3F & 3R
R-38	146	E1592, SH.17	WIRING DIAGRAM TRANSFORMER BANK NO. 2	PANELS 4F & 4R
R-39	147	E1592, SH.18	WIRING DIAGRAM LINE NO. 2	PANELS 5F & 5R
R-40	148	E1592, SH.19	WIRING DIAGRAM TRANSFORMER BANK NO. 1	PANELS 6F & 6R
			UNIT ELECTRIC CONTROL INC.	
R-41	149	7569C-1	NO. 4 LINE RELAY PANEL	
R-42	150	7569C-2	NO. 4 LINE RELAY PANEL	A.C. ELEMENTARY WIRING DIAGRAM
R-43	151	7569C-3	NO. 4 LINE RELAY PANEL	D.C. ELEMENTARY WIRING DIAGRAM
R-44	152	7569C-4	NO. 4 LINE RELAY PANEL	WIRING DIAGRAM 2F
R-45	153	7569C-5	NO. 4 LINE RELAY PANEL	WIRING DIAGRAM 2R
			WASHINGTON ELECTRIC CONTROLS, INC.	
R-46	154	81223-S, SH. 2	TRANSFORMER NO. 3	THREE LINE DIAGRAM
R-47	155	81223-S, SH. 3	GEN. NO. 5 & TRANSF. NO. 3	DC SCHEMATIC - SHEET 1
R-48	156	81223-S, SH. 4	GEN. NO. 5 & TRANSF. NO. 3	DC SCHEMATIC - SHEET 2
R-49	157	81223-S, SH. 13	OCB 318 & 328	THREE LINE DIAGRAM
			STRUCTURAL	
R-50	158	HA2C-022.4	PROJECT LOCATION AND SITE MAP	
R-51	159	HA5C-005.1	GENERAL, YARD - SHEET 1	
R-52	160	HA5S-108	CABLE TUNNEL - OUTLINE, SHEET 2	
R-53	161	HA6S-001.1	SWITCHYARD, FOOTING LOCAITON PLAN AND DETAILS	
R-54	162	HA6S-001.2	SWITCHYARD FOOTING AND MISCELLANEOUS STRUCTURE DETAILS	
R-55	163	HA6S-301.2	SWITCHYARD, STRUCTURAL STEEL - SHEET 1	
R-56	164	HA6S-304.1	SWITCHYARD, STRUCTURAL STEEL - SHEET 4	
R-57	165	HA6S-305.1	SWITCHYARD, STRUCTURAL STEEL - SHEET 5	
1 R-58	166	9970372	SCHEMATICS	
1 R-59	167	9970372	SCHEMATICS	
1 R-60	168	9970372	SCHEMATICS	
1 R-61	169	9970372	SCHEMATICS	
1 R-62	170	9970372	SCHEMATICS	
1 R-63	171	8880-5-0312	SCHEMATICS	
1 R-64	172	HA6S-304.1	SCHEMATICS	
1 R-65	173	9970372	SCHEMATICS	
1 R-66	174	HA5E-350	STRUCTURAL STEEL - SHEET 2	

PLATE NO.	SHEET NO.	CAD FILE NO.	TITLE
1 R-67	175	HA5E-351	SCHEMATICS
1 R-68	176	HAR0157	SHOP DRAWING I-T-E CIRCUIT BREAKER COMPANY
1 R-69	177	ID61169	SHOP DRAWING WESTINGHOUSE OCB 318
1 R-70	178	HAR0157	SHOP DRAWING WESTINGHOUSE OCB 338

SYMBOL	ZONE	REVISIONS DESCRIPTION	DATE	BY
1	-	REVISED IN ACCORDANCE WITH AMENDMENT NO. 0002	18APR03	

HYDROELECTRIC DESIGN CENTER
PORTLAND, OR

U.S. ARMY ENGINEER DISTRICT
CORPS OF ENGINEERS
SAVANNAH, GEORGIA

HARTWELL MAJOR REHABILITATION - PHASE 2
HARTWELL DAM AND LAKE
SWITCHYARD UPGRADE
DRAWING INDEX
SHEET 2
SAVANNAH RIVER GEORGIA AND S. CAROLINA

SIZE	INVITATION NO.	FILE NO.	PLATE
F	DACW21-03-B-0007	HAR0157	G-03

SCALE: NONE SHEET 3

102TBLK.HAP HAP103G03.DGN

...\ebs_dgn\Har0157\HAP103G03.DGN 04/28/2003 03:39:56 PM

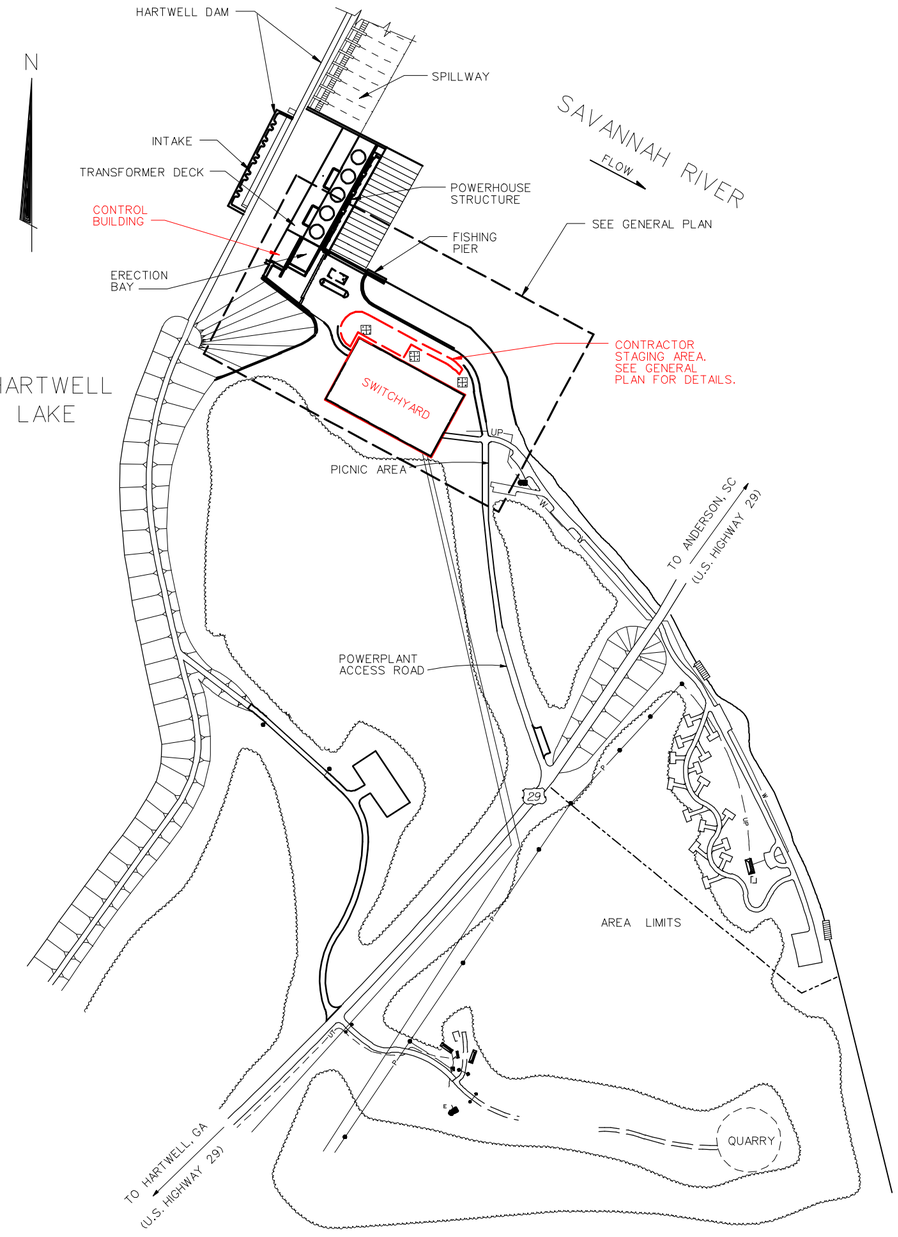

SITE MAP

SCALE: 1" = 200'

200' 0 200'

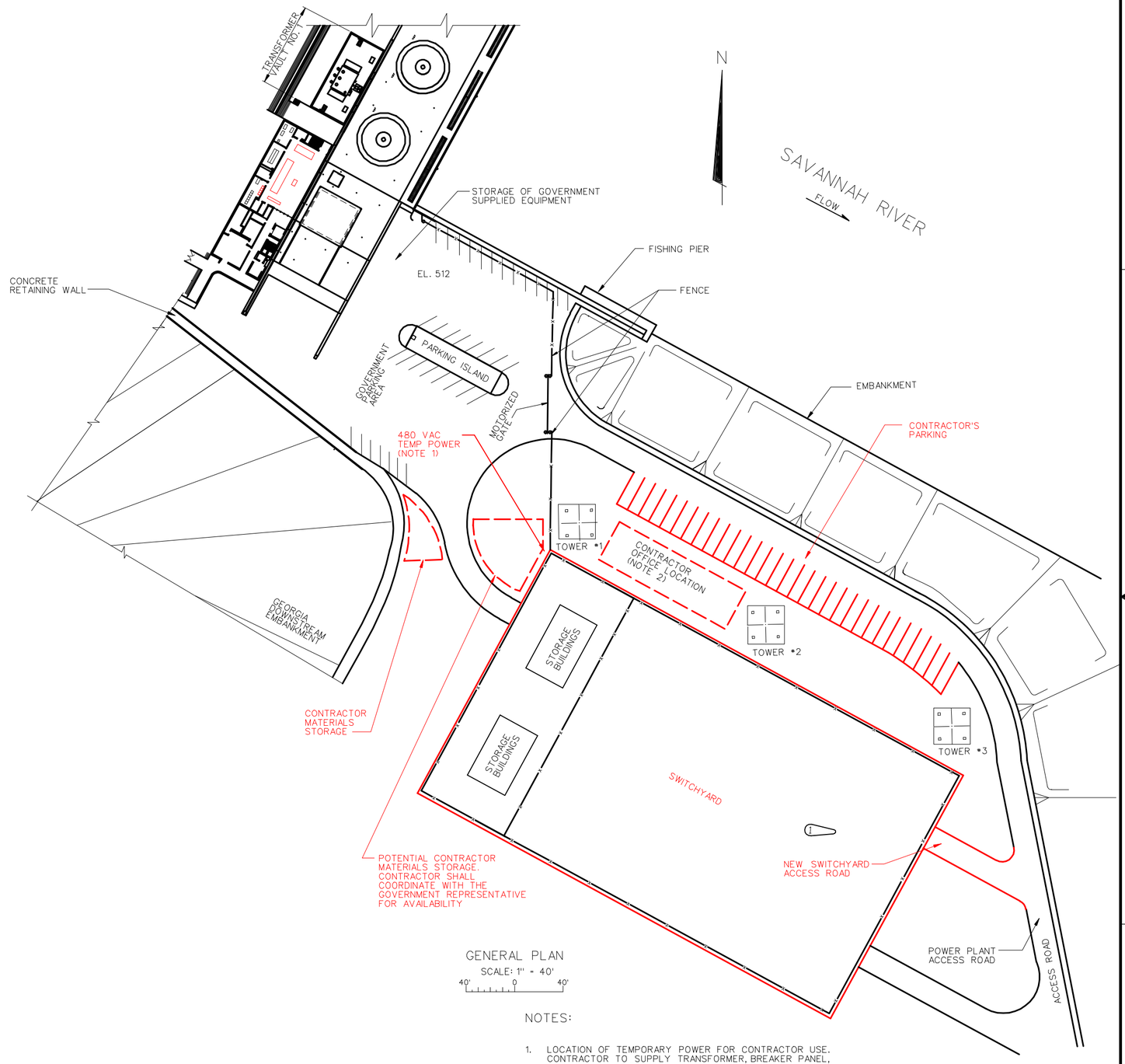

GENERAL PLAN

SCALE: 1" = 40'

40' 0 40'

NOTES:

1. LOCATION OF TEMPORARY POWER FOR CONTRACTOR USE. CONTRACTOR TO SUPPLY TRANSFORMER, BREAKER PANEL, 460 VAC, 30 A., 3-PHASE.
2. EXACT LOCATION OF CONTRACTOR EQUIPMENT SHALL BE COORDINATED WITH THE COR.

SYMBOL	ZONE	DESCRIPTION	DATE	BY
	C-5	REVISED IN ACCORDANCE WITH AMENDMENT NO. 0002	18 APR 03	

REVISIONS

HYDROELECTRIC DESIGN CENTER
PORTLAND, OR

U.S. ARMY ENGINEER DISTRICT
CORPS OF ENGINEERS
SAVANNAH, GEORGIA

HARTWELL MAJOR REHABILITATION - PHASE 2
HARTWELL DAM AND LAKE
SWITCHYARD UPGRADE

CONTRACTOR STAGING AREA AND STORAGE PLAN

SAVANNAH RIVER GEORGIA AND S. CAROLINA

SIZE	INVITATION NO.	FILE NO.	PLATE
F	DACW21-03-B-0007	HAR0157	G-06

SCALE: | SHEET 6

25-Feb-2003 10:04:10

HAP103TB.DGN HAP103G06.DGN

...\ebs_dgn\Har0157\HAP103G06.dgn 04/21/2003 01:12:08 PM

GENERAL

1. ALL MATERIALS AND WORKMANSHIP SHALL CONFORM TO THE PROJECT SPECIFICATIONS AND THE 2000 EDITION OF "INTERNATIONAL BUILDING CODE" (IBC 2000).
2. SEE PROJECT SPECIFICATIONS FOR ADDITIONAL REQUIREMENTS.
3. STRUCTURES' ELEVATION 0'-0" EQUALS SWITCHYARD EXISTING FINISH GRADE ELEVATION 515'-0". CONTRACTOR IS RESPONSIBLE FOR FIELD VERIFICATION OF SWITCHYARD EXISTING FINISH GRADE.
4. LIVE LOAD: NONE. STRUCTURES ARE DESIGNED FOR SUPPORTING THE EQUIPMENT ONLY.
5. WIND FORCE:
   A. IBC 2000 BASIC WIND SPEED (3-SECOND GUST) = 90 MPH
   B. EXPOSURE CATEGORIES: D
   C. IMPORTANCE FACTOR I = 1.15
6. SEISMIC FORCE (ZIP CODE 30643):
   A. BASE SHEAR PER SECTION 1622 OF IBC 2000
   B. SEISMIC USE GROUP: III
   C. IMPORTANCE FACTOR I = 1.50
   D. SITE CLASS: D (ASSUMED) FOR SWITCHYARD ONLY
   E. THE MAXIMUM CONSIDERED EARTHQUAKE SPECTRAL RESPONSE ACCELERATIONS FOR SHORT PERIOD OF 0.2 SECOND, Sms = 0.569g WITH A SOIL FACTOR OF 1.50
   F. THE MAXIMUM CONSIDERED EARTHQUAKE SPECTRAL RESPONSE ACCELERATIONS FOR 1 SECOND PERIOD, Sm1 = 0.303g WITH A SOIL FACTOR OF 2.26
7. THE CONTRACTOR SHALL BE RESPONSIBLE FOR STRUCTURAL STABILITY DURING THE CONSTRUCTION. THE STRUCTURES SHOWN ON THE DRAWINGS HAVE BEEN DESIGNED FOR STABILITY UNDER THEIR FINAL CONFIGURATIONS ONLY.
8. THE CONTRACTOR SHALL SHORE ALL CONSTRUCTION LOADS. THE CONTRACTOR IS RESPONSIBLE FOR SHORING DESIGN AND CONSTRUCTION.
9. THIS CONTRACT WORK OCCURS WITHIN A GOVERNMENT HYDROELECTRIC POWER PLANT FACILITY. CONTRACTOR SHALL COORDINATE ALL CONSTRUCTION ACCESS AND OPERATIONS WITH THE GOVERNMENT TO AVOID ANY DISRUPTION TO ONGOING FACILITY OPERATIONS.

FOUNDATIONS

1. SOIL INVESTIGATION REPORT IS NOT AVAILABLE FOR THIS PROJECT. GROUNDWATER TABLE IS UNKNOWN.
2. SHORE ALL EXCAVATIONS AS REQUIRED TO PREVENT SUBSIDENCE OR DAMAGE TO ADJACENT EXISTING STRUCTURES AND UTILITIES. THE CONTRACTOR IS RESPONSIBLE FOR DESIGN AND SHORING.
3. ALL SPREAD FOOTINGS ARE DESIGNED FOR AN ALLOWABLE BEARING PRESSURE OF 1,500 PSF.
4. ALL FOOTINGS, RE-USE FOOTINGS AND PADS SHALL BE CONSTRUCTED ON 9" MINIMUM, 12" MAXIMUM THICK BASE OF COMPACTED GRANULAR FILL MATERIAL. COMPACT FILL MATERIAL TO A MINIMUM OF 90% MODIFIED PROCTOR IN ACCORDANCE WITH ASTM D 1557-00. SEE SECTION 02315 OF SPECS FOR ADDITIONAL REQUIREMENTS.
5. CONTRACTOR SHALL INFORM THE GOVERNMENT FOR QUESTIONABLE SOIL, PREVIOUS CONSTRUCTION DEBRIS, COBBLES AND BOULDERS ENCOUNTERED DURING THE EXCAVATION.

CONCRETE FORMWORK

1. FORMWORK, SHORING AND RESHORING SHALL BE IN ACCORDANCE WITH ACI 301-99 "SPECIFICATIONS FOR STRUCTURAL CONCRETE" AND ACI 347-01 "GUIDE TO FORMWORK FOR CONCRETE".
2. THE CONTRACTOR SHALL BE RESPONSIBLE FOR DESIGN AND CONSTRUCTION OF FORMWORK, SHORING AND RESHORING.
3. REMOVE FORMS ONLY WHEN CONCRETE IS SUFFICIENT HARD TO PREVENT DAMAGE BY FORM REMOVAL AND THE CONCRETE HAS ATTAINED SUFFICIENT STRENGTH TO SAFELY SUPPORT DEAD AND ANY SUPERIMPOSED LOAD WHICH MAY BE APPLIED AS SUBSTANTIATED BY FIELD CURED TEST CYLINDERS.
4. CHAMFER ALL EXPOSED CONCRETE EDGE 3/4" TYP UN.

CONCRETE

1. CONCRETE COMPRESSIVE STRENGTH SHALL BE 3,000 PSI MINIMUM AT 28 DAYS WITH SLUMP OF 4" PLUS OR MINUS 1" AT PLACEMENT.
2. CONCRETE SHALL BE NORMAL WEIGHT CONCRETE OF 145 PCF. CONCRETE MATERIAL AND QUALITY SHALL BE IN ACCORDANCE WITH ACI 318-99 "BUILDING CODE REQUIREMENTS FOR STRUCTURAL CONCRETE". CONTRACTOR SHALL SUBMIT CONCRETE MIXTURE DESIGN TO THE GOVERNMENT FOR REVIEW.
3. CONCRETE PLACEMENT AND CURING SHALL BE IN ACCORDANCE WITH ACI 301-99 "SPECIFICATIONS FOR STRUCTURAL CONCRETE".
4. ALL EXTERIOR CONCRETE SHALL BE AIR ENTRAINED IN ACCORDANCE WITH THE SPECS.
5. TYPICAL CONCRETE FINISH:
   A. FORMED SURFACES:
      1. EXPOSED TO VIEW: CLASS C.
      2. NOT EXPOSED TO VIEW: CLASS D.

REINFORCING STEEL

1. ALL REINFORCING STEEL SHALL BE ASTM A615/A615M-01b GRADE 60 DEFORMED BARS EXCEPT REINFORCING STEEL TO BE WELDED AND AS OTHERWISE NOTED ON THE DRAWINGS SHALL BE ASTM A706/A706M-01 GRADE 60 DEFORMED BARS.
2. FABRICATION AND PLACEMENT OF REINFORCING STEEL SHALL BE IN ACCORDANCE WITH CRSI MSP "MANUAL OF STANDARD PRACTICE" AND ACI 301-99 "SPECIFICATIONS OF STRUCTURAL CONCRETE".
3. CONCRETE COVER OVER REINFORCING STEEL SHALL BE AS FOLLOWS TYP UN:
   A. CAST AGAINST EARTH: 3"
   B. EXPOSED TO EARTH OR WEATHER: 2"
4. UNLESS OTHERWISE NOTED, ALL HOOPS AND HOOKS SHALL CONFORM TO CHAPTER 21 OF ACI 318-99.

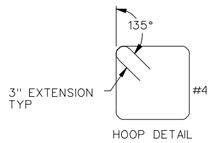

HOOP DETAIL

STRUCTURAL STEEL

1. ALL STEEL SHAPES, PLATES AND BARS SHALL BE ASTM A36/A36M-01 Fy = 36 KSI UNLESS OTHERWISE NOTED ON THE DRAWINGS. DUAL CERTIFIED STEEL (Fy = 36 KSI & Fy = 50 KSI) IS ACCEPTABLE FOR THE PROJECT.
2. SQUARE AND RECTANGULAR HOLLOW STRUCTURAL SECTIONS (HSS) SHALL BE ASTM A500-01a GRADE B Fy = 46 KSI.
3. FABRICATION AND CONSTRUCTION SHALL BE IN ACCORDANCE WITH THE AISC 1989 EDITION OF "SPECIFICATION FOR STRUCTURAL STEEL BUILDINGS" , 2000 EDITION OF "CODE OF STANDARD PRACTICE FOR STEEL BUILDINGS AND BRIDGES" AND 1997 EDITION OF "SEISMIC PROVISIONS FOR STRUCTURAL STEEL BUILDINGS". THE CONTRACTOR IS RESPONSIBLE FOR THE DESIGN AND CONSTRUCTION OF TEMPORARY BRACING OR SHORING FOR SAFELY SUPPORTING STEEL PRIOR TO COMPLETION OF CONSTRUCTION.
4. ALL BOLTS SHALL BE ASTM A325-02 HIGH STRENGTH BOLTS. BOLT DIAMETERS ARE AS SHOWN ON THE DWGS. BOLT HOLES SHALL BE STANDARD ROUND HOLES (DIA+1/16").
5. INSTALLATION AND TIGHTENING OF BOLTS: ALL INSTALLATION AND TIGHTENING OF HIGH STRENGTH BOLTS ASTM A325 SHALL BE IN ACCORDANCE WITH AISC 1994 EDITION OF "SPECIFICATION FOR STRUCTURAL JOINTS USING ASTM A325 OR A490 BOLTS". THERE ARE TWO TYPES OF BOLTING CONNECTIONS. ONE IS A325SC AS SHOWN ON THE DWGS THAT REPRESENTS THE SLIP-CRITICAL CONNECTION AND THE OTHER IS A325N AS SHOWN ON THE DWGS THAT REPRESENTS THE SNUG TIGHT CONNECTION.
   a. A325SC, SLIP-CRITICAL CONNECTIONS AS SHOWN ON THE DWGS, SHALL BE USED FOR ALL BRACE FRAMES AS SHOWN ON THE DWGS. ALL A325SC BOLTS SHALL BE FULLY TENSIONED. ALL FAYING SURFACES SHALL BE PREPARED AS REQUIRED FOR CLASS A OR BETTER SLIP-CRITICAL JOINTS.
   b. A325N, SNUG TIGHT CONNECTIONS AS SHOWN ON THE DWGS, REQUIRES THAT ALL A325N BOLTS SHALL BE TIGHTENED TO THE SNUG TIGHT CONDITION. THE SNUG TIGHT CONDITION IS DEFINED AS THE TIGHTNESS THAT EXISTS WHEN ALL PLIES ARE IN FIRM CONTACT. THIS MAY USUALLY BE ATTAINED BY A FEW IMPACTS OF AN IMPACT WRENCH OR THE FULL EFFORT OF A MAN USING AN ORDINARY SPUD WRENCH.
6. ANCHOR BOLTS SHALL BE ASTM F 1554-99 GRADE 55. USE TEMPLATES TO INSTALL ANCHOR BOLTS.
7. WELDING SHALL BE IN ACCORDANCE WITH AWS D1.1/D1.1M-02 "STRUCTURAL WELDING CODE-STEEL". WELDING FILLER METAL SHALL BE AWS A5.1-91 OR A5.5-96 E70XX LOW HYDROGEN ELECTRODES. ALL WELDERS SHALL BE AWS QUALIFIED. SURFACE TO BE WELDED SHALL BE WIRE BRUSHED CLEAN PRIOR TO WELDING.

STEEL FABRICATIONS

1. ALL STEEL FABRICATIONS SHALL BE IN ACCRODACE WITH THE NOTES UNDER THE STRUCTURAL STEEL TYP UN.
2. ALL EXTERIOR STEEL FABRICATIONS INCLUDING ALL STEEL BEAMS, COLUMNS, EXPOSED STEEL BOLTS, ANCHORS, WASHERS, NUTS AND OTHER EXPOSED STEELS SHALL BE ZINC COATED HOT-DIP GALVANIZED TYP.

DEMOLITIONS

1. EXISTING STRUCTURES AND THEIR FOOTINGS THAT ARE REQUIRED TO BE REMOVED ARE SHOWN OR INDICATED ON THE INFORMATIONAL OR DESIGN DRAWINGS. THE CONTRACTOR SHALL FIELD VERIFY ALL THESE STRUCTURES PRIOR TO DEMOLITIONS.
2. THE CONTRACTOR IS RESPONSIBLE FOR SAFELY REMOVING OF STRUCTURES AND THEIR FOOTINGS AS REQUIRED WITHOUT CAUSING ANY DISRUPTION TO THE ON GOING HYDROELECTRIC POWER PLANT AND ITS SWITCHYARD OPERATION.
3. THE CONTRACTOR SHALL TAKE PROPER MEASURES TO PROTECT EXISTING EMBEDDED GROUNDING, CONDUITS, UTILITY LINES, ADJACENT STRUCTURES AND THEIR FTGS FROM ANY DAMAGE DURING THE DEMOLITIONS AND CONSTRUCTION.
4. AFTER FOOTINGS' REMOVAL, CONTRACTOR SHALL PLACE BACKFILL MATERIAL INCLUDING GRAVEL TO THE EL OF THE EXST FINISH GRADE. THE BACKFILL MATERIAL IS TO REPLACE ALL REMOVED FOOTINGS AND IT SHALL BE FREE OF ORGANIC MATERIAL, CONSTRUCTION DEBRIS, COBBLES AND BOULDERS. THE BACKFILL SHALL BE PLACED IN LIFTS AND COMPACTED. SEE FOUNDATIONS AND PROJECT SPECS FOR ADDITIONAL REQUIREMENTS.

(1)

(1) STRUCTURAL NOMENCLATURE

SYMBOL	DESCRIPTION
AB	ANCHOR BOLT
ACI	AMERICAN CONCRETE INSTITUTE
ADDL	ADDITIONAL
ADJ	ADJACENT
AISC	AMERICAN INSTITUTE OF STEEL CONSTRUCTION
AL	ALUMINUM
ALT	ALTERNATE
ANC	ANCHOR
ARCH	ARCHITECT, ARCHITECTURAL
ASTM	AMERICAN SOCIETY OF TESTING AND MATERIAL
AWS	AMERICAN WELDING SOCIETY
@	AT
BAL	BALANCE
BLDG	BUILDING
BM	BEAM
BOT	BOTTOM
BRG	BEARING
BTWN	BETWEEN
CC	CENTER TO CENTER
CHKD	CHECKERED
CIP	CAST IN PLACE
CJ	CONSTRUCTION/CONTROL JOINT
CL	CENTER LINE
CLR	CLEAR, CLEARANCE
CMU	CONCRETE MASONRY UNIT
COL	COLUMN
CONC	CONCRETE
CONN	CONNECTION
CONT	CONTINUOUS
CRSI	CONCRETE REINFORCING STEEL INSTITUTE
CTR	CENTER
CTRD	CENTERED
CTSK	COUNTERSINK
DBA	DEFORMED BAR ANCHOR
DBL	DOUBLE
DIA.	DIAMETER
DL	DEAD LOAD
DN	DOWN
DWG(S)	DRAWING(S)
DWL(S)	DOWEL(S)
D/S	DOWNSTREAM
EA	EACH
ECS	EPOXY CAOATED STEEL
EE	EACH END
EF	EACH FACE
EL	ELEVATION
EQ	EQUAL
EQUIP	EQUIPMENT
EW	EACH WAY
EXP	EXPANSION
EXST	EXISTING
EXT	EXTERIOR
FD	FLOOR DRAIN
FDN	FOUNDATION
FT (')	FOOT (FEET)
FIN	FINISH
FLG	FLANGE
FLR	FLOOR
FOM	FACE OF MASONRY
FOS	FACE OF STUD
FRMG	FRAMING
FRP	FIBER REINFORCED PLASTIC
FS	FAR SIDE
FTG	FOOTING
FV	FIELD VERIFICATION
GA	GAUGE, GAGE
GALV	GALVANIZED
GB	GRADE BEAM
GRTG	GRATING
HCA	HEADED CONCRETE ANCHOR
HORIZ	HORIZONTAL
HSB	HIGH STRENGTH BOLT
HT	HEIGHT
I.E.	INVERT OF TRENCH
I.F.	INSIDE FACE
IN (")	INCH(S)
INFO	INFORMATION
ID	INSIDE DIAMETER
JT	JOINT
KSI	KIPS PER SQUARE INCH
L	ANGLE
LBS	POUNDS
LL	LIVE LOAD
LONGIT	LONGITUDINAL
LLH	LONG LEG HORIZONTAL
LLV	LONG LEG VERTICAL
LSH	LONG SLOTTED HOLE
MFR	MANUFACTURER
MAX	MAXIMUM
MB	MACHINE BOLT
MECH	MECHANICAL
MIN	MINIMUM
MTL	METAL
NDT	NOT-DESTRUCTIVE TEST
NIC	NOT IN CONTRACT
NO.	NUMBER
#	NUMBER
NS	NEAR SIDE
NTS	NOT TO SCALE
OC	ON CENTER
O.F.	OUTSIDE FACE
O-O	OUT TO OUT
OPNG	OPENING
OPP	OPPOSITE
OSH	OVERSIZED HOLE
/	PER
%	PERCENT
PC	PRECAST
PEN	PENETRATION
PLACS	PLACES
PJF	PREMOLDED JOINT FILLER
PL	PLATE
PROJ	PROJECTION
PSF	POUND PER SQUARE FOOT
PSI	POUND PER SQUARE INCH
PT	POINT
PVC	POLYVINYL CHLORIDE
R	RADIUS
RD	ROOF DRAIN

SYMBOL	DESCRIPTION
REINF	REINFORCE/REINFORCING
REF	REFERENCE
REQD	REQUIRED
RO	ROUGH OPENING
RTN	RETURN
SC	SLIP CRITICAL
SCHED	SCHEDULE
SHT	SHEET
SIB	STRUCTURAL ISOLATION BREAK
SIM	SIMILAR
SPCG	SPACING
SPECS	SPECIFICATIONS
SQ	SQUARE
SS	STAINLESS STEEL
SSH	SHORT SLOTTED HOLE
STA	STATION
STD	STANDARD
STIF	STIFFENER
STL	STEEL
STRUCT	STRUCTURAL
SYM	SYMMETRICAL
T&B	TOP AND BOTTOM
TEMP	TEMPORARY
THK	THICK
T.O.	TOP OF
TOC	TOP OF CONCRETE
TOF	TOP OF FOOTING
TOS	TOP OF STEEL
TOW	TOP OF WALL
TRANS	TRANSVERSE
TYP	TYPICAL
UN	UNLESS NOTED
U/S	UPSTREAM
VERT	VERTICAL
W	WIDE FLANGE BEAM
W/	WITH
W/O	WITHOUT
WP	WORK POINT
WS	WATERSTOP
WT	WEIGHT
WWF	WELDED WIRE FABRIC

LEGEND

X / X — SECTION DESIGNATION, NUMBER OR LETTER
SECTION IS SHOWN ON THE SAME DRAWING/PLATE

X / X-X — SECTION DESIGNATION, NUMBER OR LETTER
DRAWING/PLATE THAT THE SECTION IS SHOWN ON

X / — DETAIL NUMBER
DETAIL IS SHOWN ON THE SAME DRAWING/PLATE

X / X — DETAIL NUMBER
DRAWING/PLATE THAT THE DETAIL IS SHOWN ON

BRACED BAY ABOVE FRAMING LEVEL SHOWN

BRACED BAY BELOW FRAMING LEVEL SHOWN

(GREEN LINE) EXISTING STRUCTURES REMOVED OR RELOCATED BY THE CONTRACTOR

(RED LINE) STRUCTURES PROVIED BY THE CONTRACTOR.

(BLACK LINE) EXISTING STRUCTURES.

MATERIAL SYMBOLS

EARTH — STEEL
GRAVEL — SAND FILL
ROCK — CMU
CONCRETE
EXISTING CONCRETE

SYMBOL	ZONE	DESCRIPTION	DATE	BY
1	C-5	REVISED IN ACCORDANCE WITH AMENDMENT NO. 0002	18 APR 03	

REVISIONS

HYDROELECTRIC DESIGN CENTER
PORTLAND, OR

U.S. ARMY ENGINEER DISTRICT
CORPS OF ENGINEERS
SAVANNAH, GEORGIA

HARTWELL MAJOR REHABILITATION - PHASE 2
HARTWELL DAM AND LAKE
SWITCHYARD UPGRADE
STRUCTURAL

STRUCTURAL GENERAL NOTES

SAVANNAH RIVER GEORGIA AND S. CAROLINA

SIZE	INVITATION NO.	FILE NO.	PLATE
F	DACW21-03-B-0007	HAR0157	S-01

SCALE: AS SHOWN — SHEET 11

18 Apr 2003 09:44:0

HAP103TB.DGN — HAP103S01.DGN

...\ebs_dgn\Har0157\HAP103S01.dgn 04/21/2003 01:17:09 PM

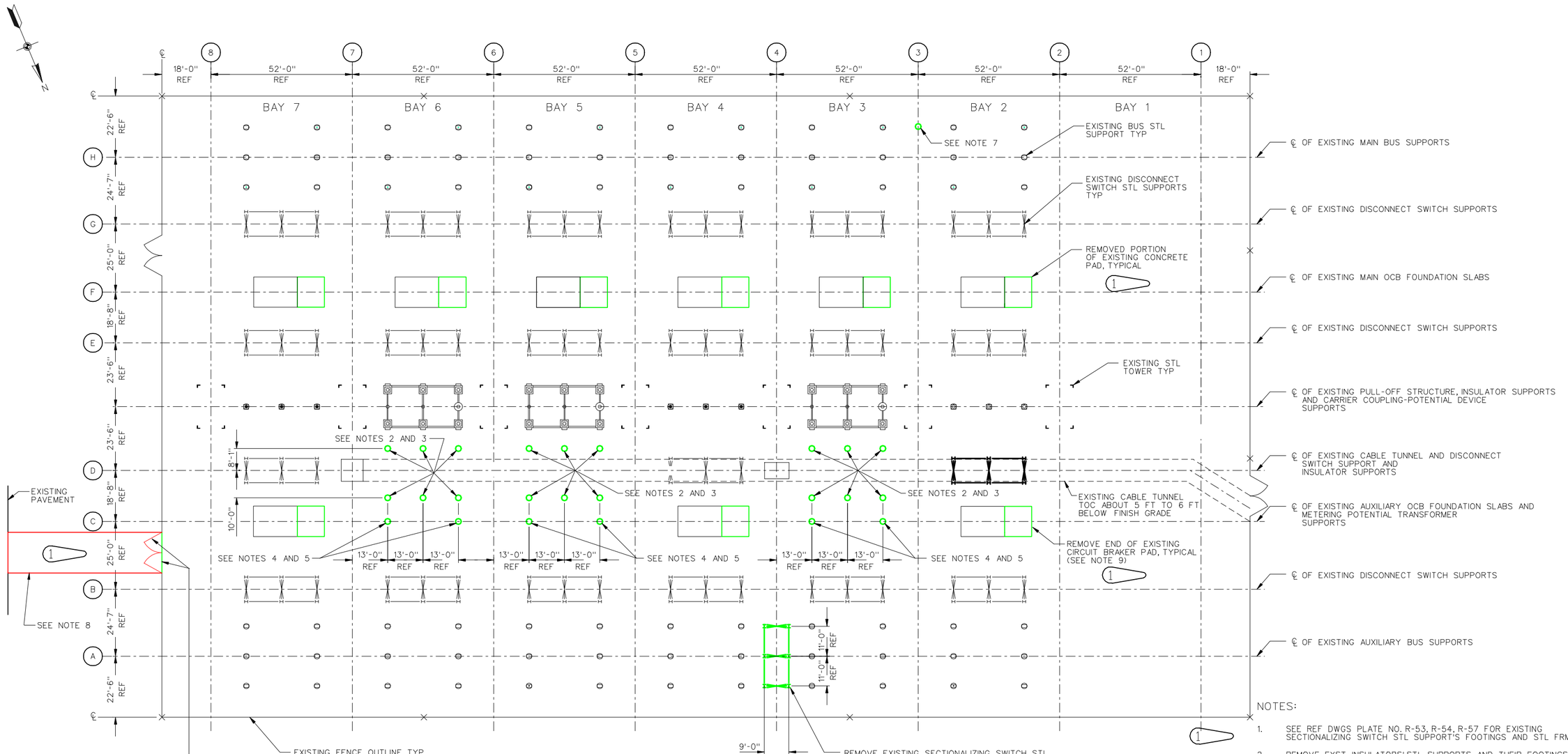

REMOVE EXISTING FENCE AS REQUIRED PROVIDE AND INSTALL A DOUBLE GATE (20' W X 8' H) AND POSTS THAT MATCH THE EXISTING GATE AND POSTS ALONG THE SAME SIDE BETWEEN THE GRID LINE (F) AND (G).

THE CONTRACTOR SHALL SUBMIT DESIGN, DWGS AND DETAILS OF THE GATE, POSTS AND FTGS TO THE COR FOR REVIEW AND APPROVAL PRIOR TO CONSTRUCTION.

DEMOLITION PLAN (PLAN OF EXST SWITCHYARD STRUCTURES AT THE FINISH GRADE EL 0'-0")

SCALE: 1/16" = 1'-0"

2'0 10' 20' 30'

NOTES:

1. SEE REF DWGS PLATE NO. R-53, R-54, R-57 FOR EXISTING SECTIONALIZING SWITCH STL SUPPORT'S FOOTINGS AND STL FRMG DETAILS.
2. REMOVE EXST INSULATORS' STL SUPPORTS AND THEIR FOOTINGS, 18 TOTAL. BACKFILL IS REQD AFTER REMOVAL OF FTG.
3. SEE REFERENCE DWGS PLATES R-53, R-54, R-56 FOR EXISTING INSULATOR SUPPORTS' FOOTINGS AND STL PIPE DETAILS.
4. REMOVE EXISTING METERING POTENTIAL TRANSFORMER STEEL SUPPORTS. AND THEIR CONCRETE FOOTINGS. SIX (6) TOTAL.

(TEXT REMOVED)

5. SEE REF DWGS PLATE NO. R-53, R-54, R-57 FOR EXISTING METERING POTENTIAL TRANSFORMER SUPPORTS' FOOTINGS AND STL PIPE DETAILS.
6. SEE PROJECT SPECS AND DEMOLITIONS SECTION OF STRUCTURAL GENERAL NOTES SHT FOR ADDITIONAL REQUIREMENTS.
7. REMOVE EXISTING COUP. CAP POT. DEVICE STEEL SUPPORT AND ITS FTG. BACKFILL IS REQD AFTER REMOVAL OF FTG.
8. THE CONTRACTOR SHALL DESIGN AND BUILD A RIGID OR FLEXIBLE PAVEMENT OF 20 FT WIDE X 100 FT LONG PER AASHTO STANDARD TRUCK LOADING OF HS20-44. THE PAVEMENT DESIGN SHALL BE SUBMITTED TO THE COR FOR REVIEW AND APPROVAL PRIOR TO CONSTRUCTION. THE CONTRACTOR SHALL PROTECT AND PREVENT EXISTING UTILITY LINES UNDER THE PAVEMENT FROM DAMAGE.
9. SEE DRAWING E-42, NOTE 5 FOR MORE INFORMATION.

SYMBOL	ZONE	DESCRIPTION	DATE	BY
		REVISIONS		
1		REVISED IN ACCORDANCE WITH AMENDMENT NO. 0002	18 APR 03	

HYDROELECTRIC DESIGN CENTER
PORTLAND, OR

U.S. ARMY ENGINEER DISTRICT
CORPS OF ENGINEERS
SAVANNAH, GEORGIA

HARTWELL MAJOR REHABILITATION - PHASE 2
HARTWELL DAM AND LAKE
SWITCHYARD UPGRADE
DEMOLITION, NEW GATE
AND NEW PAVEMENT PLAN
SAVANNAH RIVER GEORGIA AND S. CAROLINA

SIZE	INVITATION NO.	FILE NO.	PLATE
F	DACW21-03-B-0007	HAR0157	S-02

SCALE: SHEET 12

18-APR-2003 09:59:19

HAP103TB.DGN HAP103S02.DGN

...\ebs_dgn\Har0157\HAP103S02.dgn 04/21/2003 01:27:09 PM

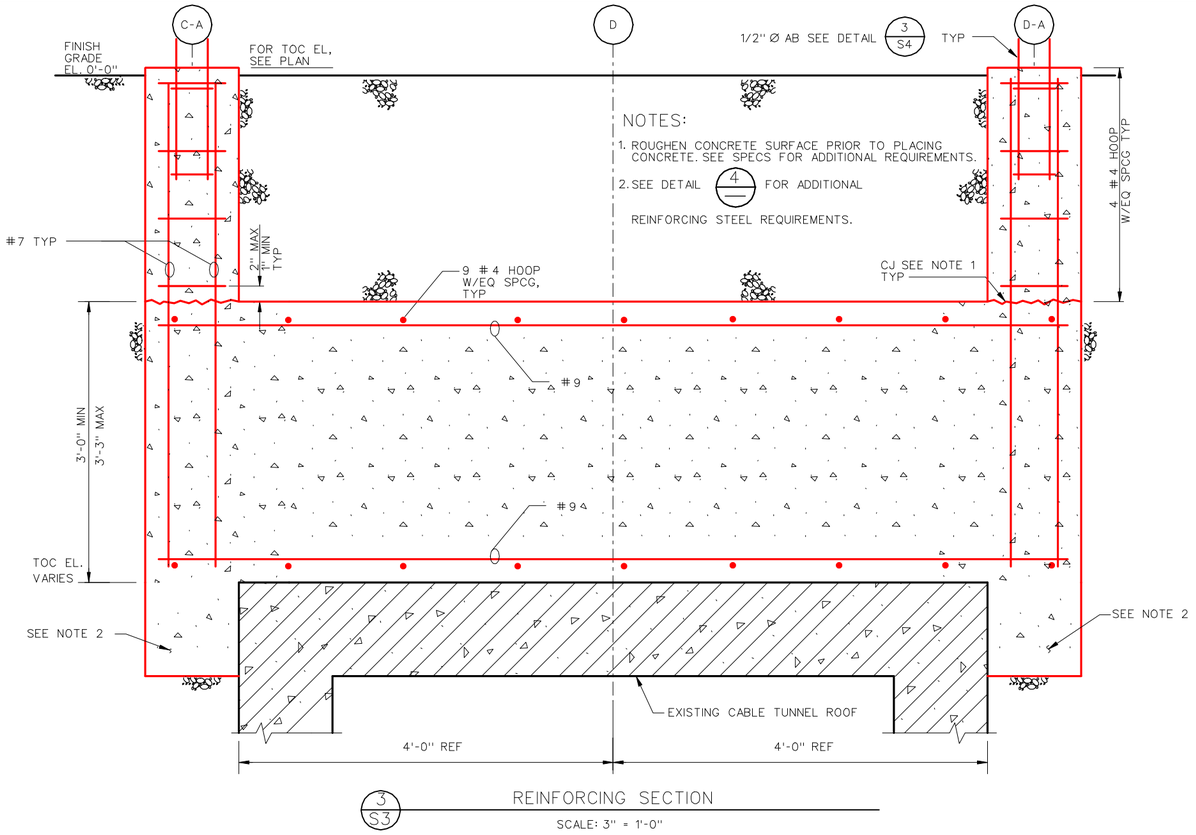

3/S3 REINFORCING SECTION

SCALE: 3" = 1'-0"

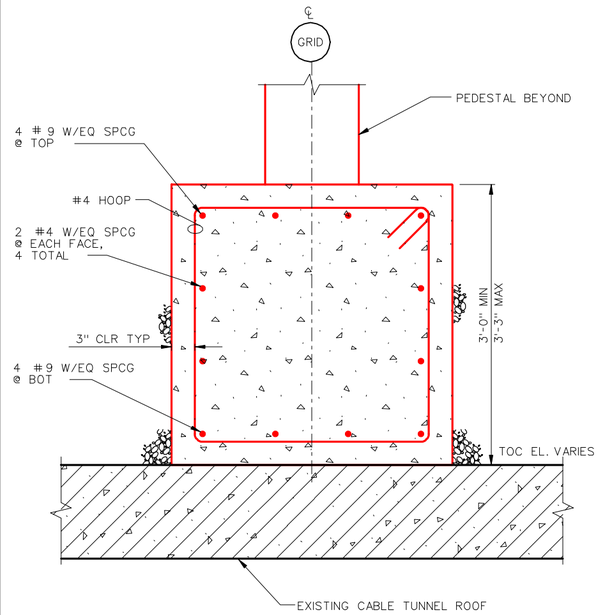

1/S3 REINFORCING SECTION

SCALE: 3" = 1'-0"

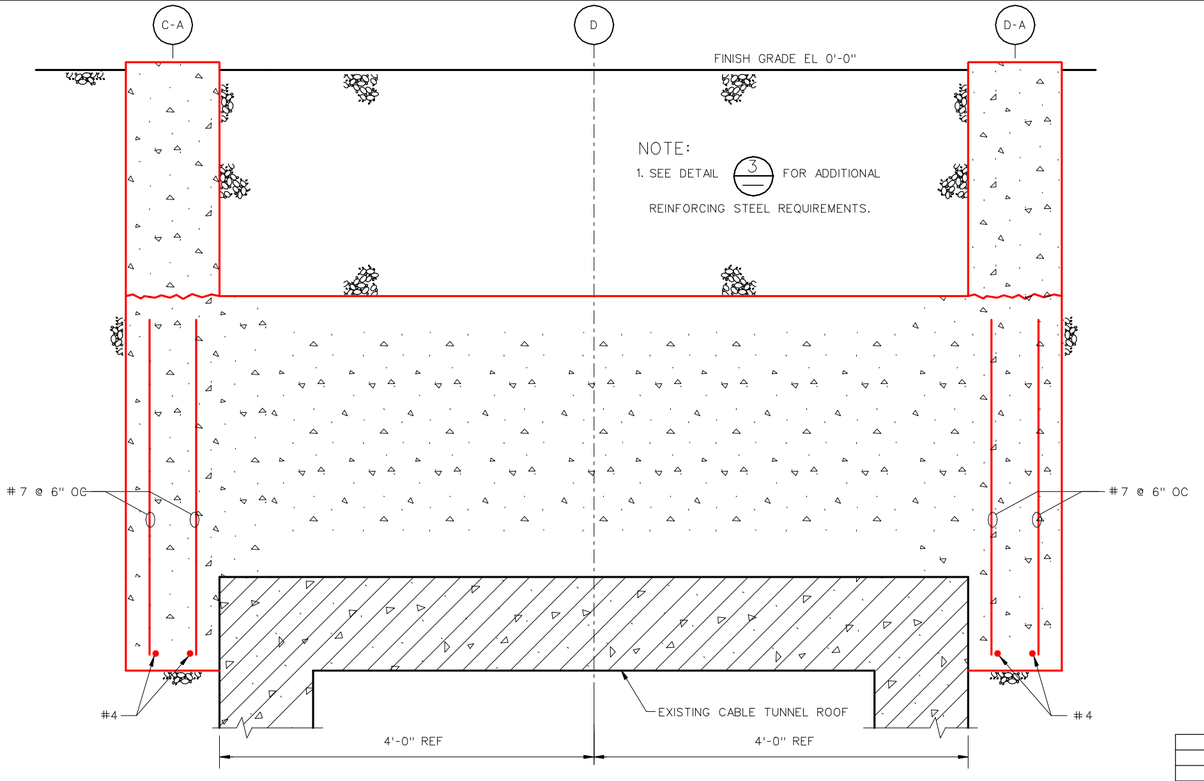

4/— REINFORCING SECTION

SCALE: 3" = 1'-0"

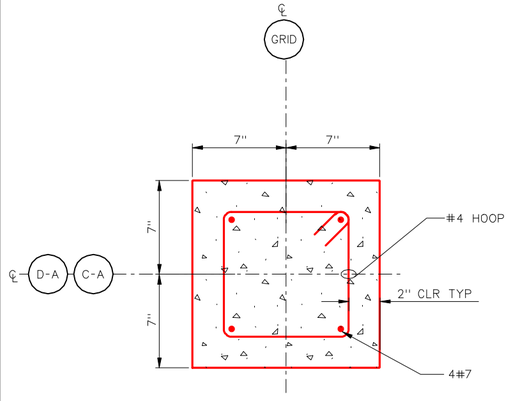

2/S3 TYPICAL PEDESTAL REINFORCING DETAIL

SCALE: 3" = 1'-0"

SYMBOL	ZONE	DESCRIPTION	DATE	BY
1	C-5,B-5	REVISED IN ACCORDANCE WITH AMENDMENT NO. 0002	18 APR 03	

REVISIONS

HYDROELECTRIC DESIGN CENTER
PORTLAND, OR

U.S. ARMY ENGINEER DISTRICT
CORPS OF ENGINEERS
SAVANNAH, GEORGIA

HARTWELL MAJOR REHABILITATION - PHASE 2
HARTWELL DAM AND LAKE
SWITCHYARD UPGRADE

STRUCTURAL DETAILS

SAVANNAH RIVER GEORGIA AND S. CAROLINA

SIZE	INVITATION NO.	FILE NO.	PLATE
F	DACW21-03-B-0007	HAR0157	S-06

SCALE: | SHEET 16

HAP103TB.DGN HAP103S06.DGN

...\ebs_dgn\Har0157\HAP103S06.dgn 04/21/2003 01:29:57 PM

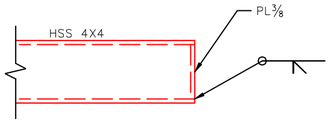

3 TYP DETAIL OF HSS 4X4 END PL CONN

SCALE: 3" = 1'-0"

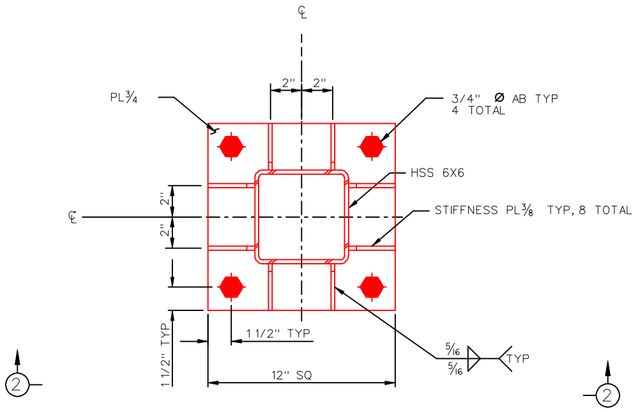

PT STEEL SUPPORT HSS 6X6 BASE PLATE PLAN

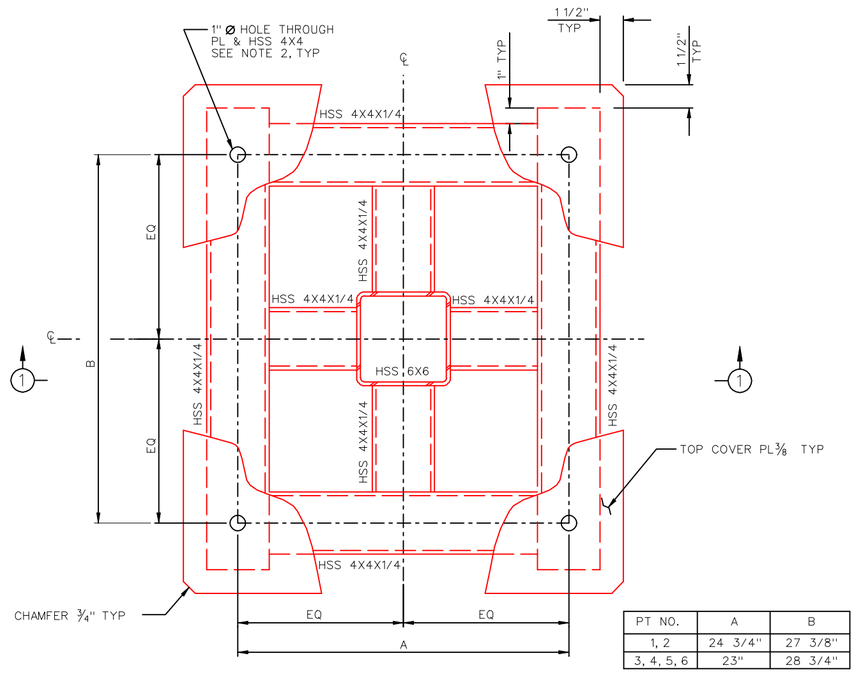

PT NO.	A	B
1, 2	24 3/4"	27 3/8"
3, 4, 5, 6	23"	28 3/4"

PT STEEL SUPPORT HSS 6X6 TOP PLAN (SEE NOTE 3)

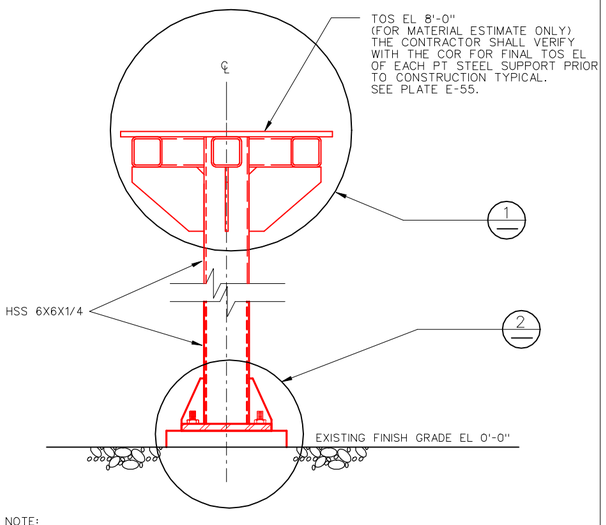

NOTE:

PT STEEL SUPPORT FTG IS NOT SHOWN FOR CLARITY.

FOR PT STEEL SUPPORT FTG F2, SEE PLATE S-07.

4 TYP PT STEEL SUPPORT ELEVATION (PT1 - PT6)

SCALE: NTS (6 TOTAL)

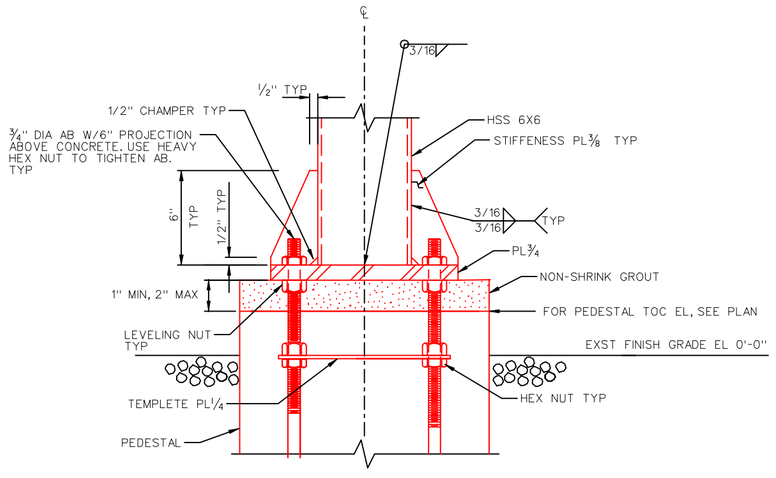

SECTION 2 - 2

2 TYP PT STEEL SUPPORT HSS 6X6 BASE PLATE DETAIL

SCALE: 3" = 1'-0"

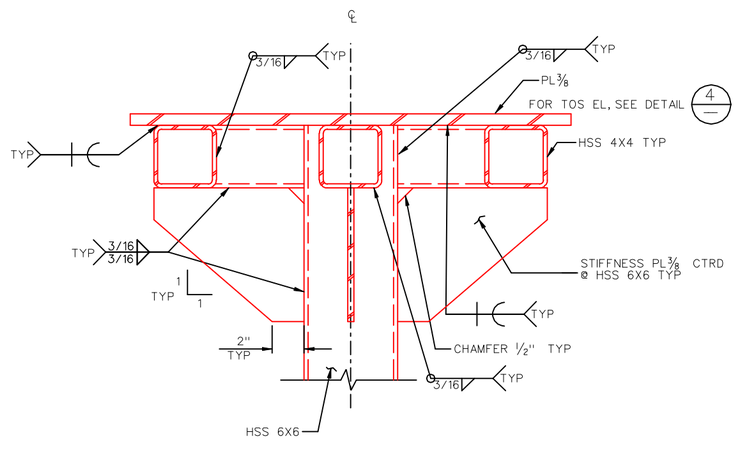

SECTION 1 - 1

NOTES:

1. FOR TS4X4 END PL CONN, SEE DETAIL 3 TYP.
2. THE CONTRACTOR SHALL COORDINATE WITH THE COR AND THE EQUIPMENT MANUFACTURER FOR ANCHOR BOLT HOLE DIAMETERS.
3. THE CONTRACTOR SHALL COORDINATE WITH THE COR FOR ORIENTATION OF TOP PL OF EACH PT SUPPORT TYP.

1 PT STEEL SUPPORT FRAMING CONN DETAIL

SCALE: 3" = 1'-0"

SYMBOL	ZONE	DESCRIPTION	DATE	BY
		SHEET ADDED BY AMENDMENT NO. 0002	18 APR 03	

REVISIONS

HYDROELECTRIC DESIGN CENTER
PORTLAND, OR

U.S. ARMY ENGINEER DISTRICT
CORPS OF ENGINEERS
SAVANNAH, GEORGIA

HARTWELL MAJOR REHABILITATION - PHASE 2
HARTWELL DAM AND LAKE
SWITCHYARD UPGRADE

STRUCTURAL DETAILS

SAVANNAH RIVER GEORGIA AND S. CAROLINA

SIZE	INVITATION NO.	FILE NO.	PLATE
F	DACW21-03-B-0007	HAR0157	S-08

SCALE: | SHEET 16B

18 Apr 2003
10:36:47

HAP103TB.DGN HAP103S08.DGN

...\ebs_dgn\Har0157\HAP103S08.dgn 04/21/2003 03:48:27 PM

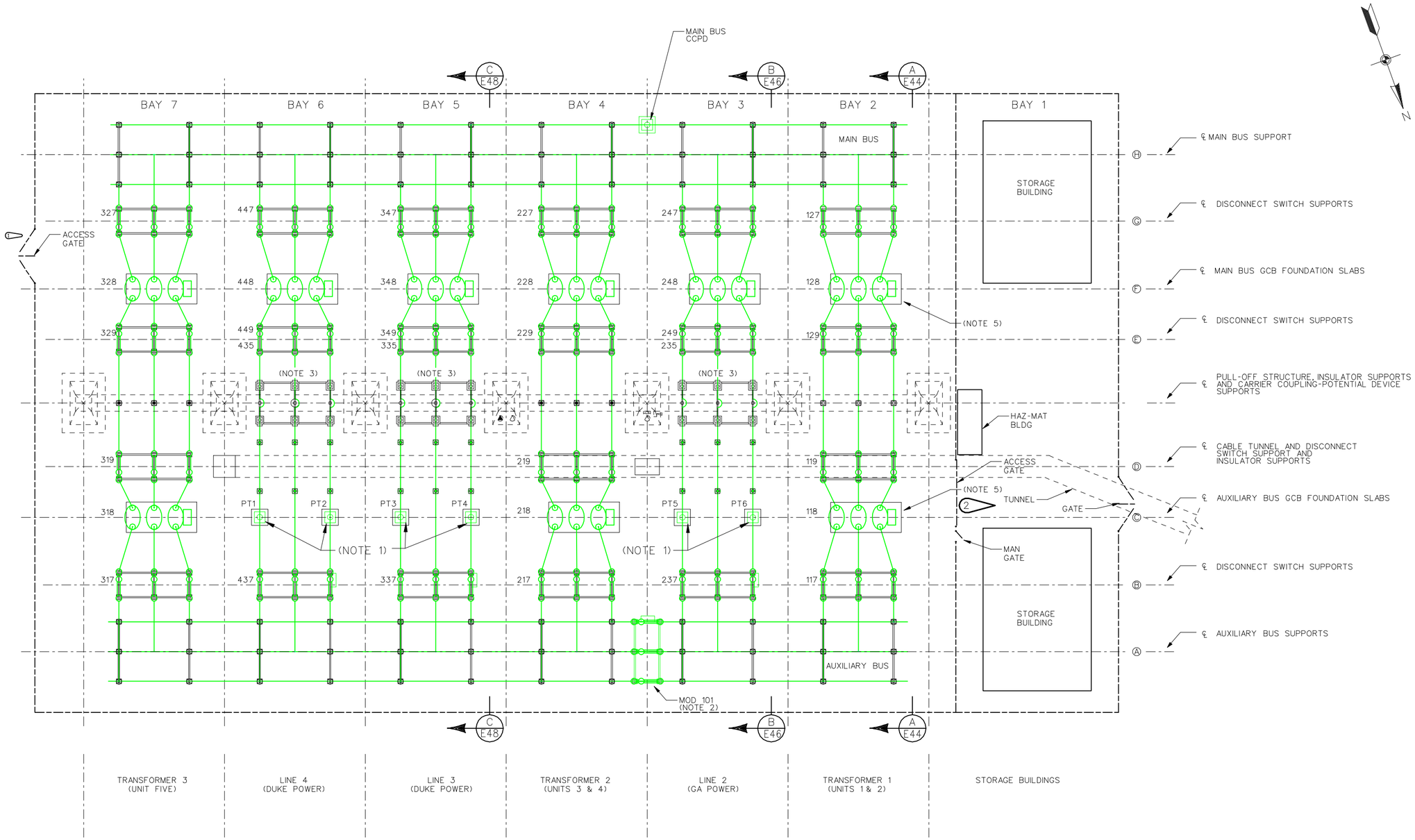

PLAN - SWITCHYARD LAYOUT
EQUIPMENT REMOVAL

LEGEND:

(GREEN LINE) EQUIPMENT WITH ITEMS TO BE REMOVED, REPLACED, OR DISPOSED OF BY CONTRACTOR

(RED LINE) EQUIPMENT WITH ITEMS FURNISHED AND/OR INSTALLED BY CONTRACTOR

(BLUE LINE) GOVERNMENT FURNISHED EQUIPMENT INSTALLED BY THE CONTRACTOR UNDER THIS CONTRACT.

(BLACK LINE) EXISTING FEATURE

NOTES:

1. LINE PT'S SHALL BE RELOCATED UNDER THE EAST END OF THE MAIN AND AUXILIARY BUS. SEE DRAWING E-42.
2. SEE DRAWING E-54 FOR EQUIPMENT REMOVAL DETAILS.
3. LINE METERING EQUIMENT DETAILS ARE SHOWN ON DRAWINGS E-52 AND E-53
4. FOOTINGS FOR EQUIPMENT BEING REMOVED OR RELOCATED ARE ALSO TO BE REMOVED.
5. SEE DRAWING E-54 FOR PAD CHANGES REQUIRED.

SYMBOL	ZONE	DESCRIPTION	DATE	BY
		REVISIONS		
1	D-5,C-3	REVISED IN ACCORDANCE WITH AMENDMENT NO. 0002	18 APR 03	

HYDROELECTRIC DESIGN CENTER
PORTLAND, OR

U.S. ARMY ENGINEER DISTRICT
CORPS OF ENGINEERS
SAVANNAH, GEORGIA

HARTWELL MAJOR REHABILITATION - PHASE 2
HARTWELL DAM AND LAKE
SWITCHYARD UPGRADE
SWITCHYARD PLAN
EXISTING CONFIGURATION
SAVANNAH RIVER GEORGIA AND S. CAROLINA

SIZE	INVITATION NO.	FILE NO.	PLATE
F	DACW21-03-B-0007	HAR0157	E-41
SCALE:		SHEET 57	

07 Apr 2003
11:46:14

HAP103TB.DGN HAP103E41.DGN

...\ebs_dgn\Har0157\HAP103E41.dgn 04/21/2003 12:46:49 PM

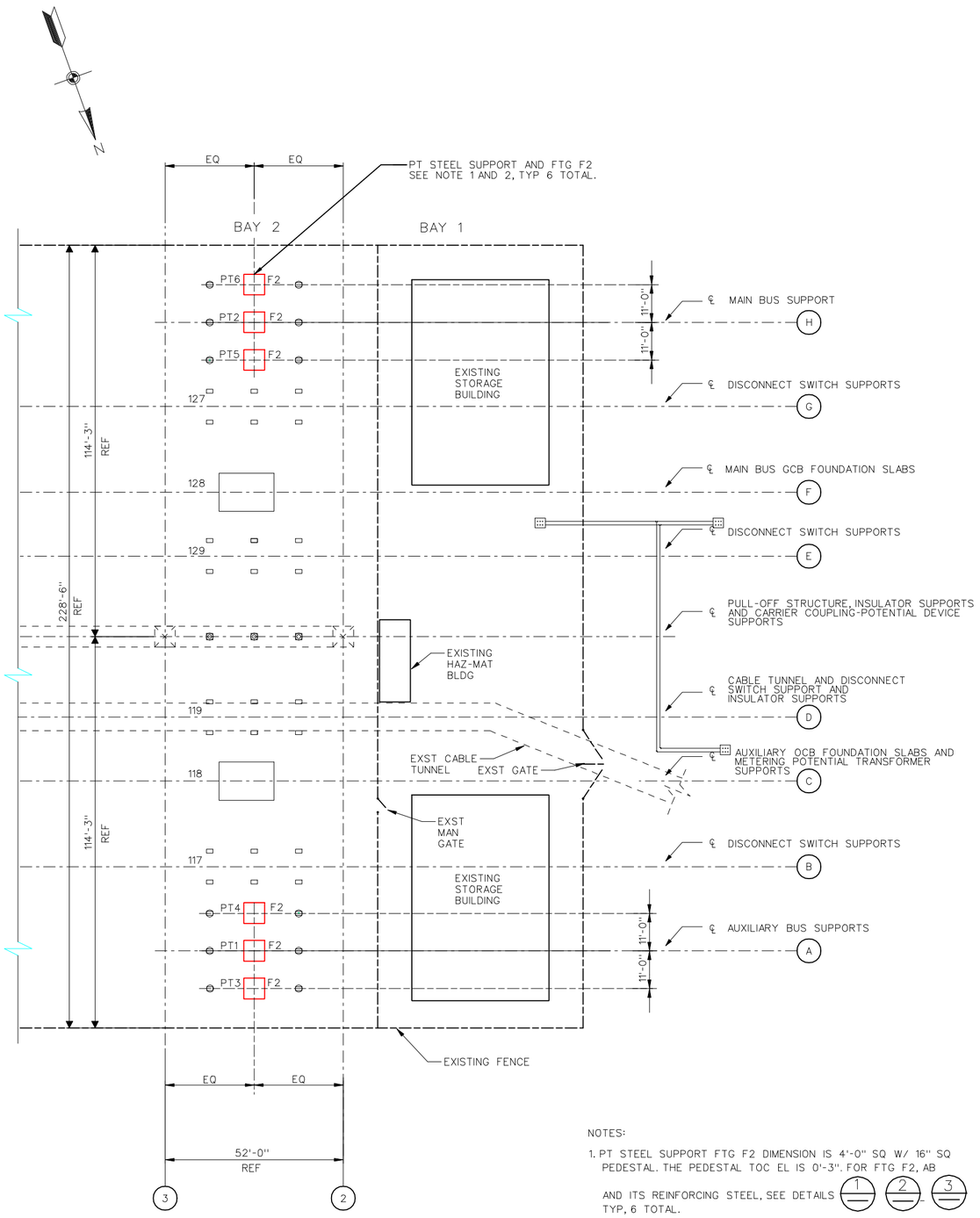

PT STEEL SUPPORT FOUNDATION PLAN

SCALE: 1/16" = 1'-0"
2'0 10' 20' 30'

NOTES:

1. PT STEEL SUPPORT FTG F2 DIMENSION IS 4'-0" SQ W/ 16" SQ PEDESTAL. THE PEDESTAL TOC EL IS 0'-3". FOR FTG F2, AB AND ITS REINFORCING STEEL, SEE DETAILS 1 2 3 TYP, 6 TOTAL.
2. FOR PT STEEL SUPPORT, SEE DETAIL 4/S8 TYP 6 TOTAL.
3. FOR FTG F2 PEDESTAL, THE TOC HORIZ SURFACE FLATNESS TOLERANCE IS MINUS 0'-0" AND PLUS 0'-3/16". SEE SPECS FOR TOC FLATNESS REQUIREMENT. TYP
4. FOR FTGS BASE PREPARATION REQUIREMENTS, SEE FOUNDATION IN STRUCTURAL GENERAL NOTES AND THE SPECS, TYP.

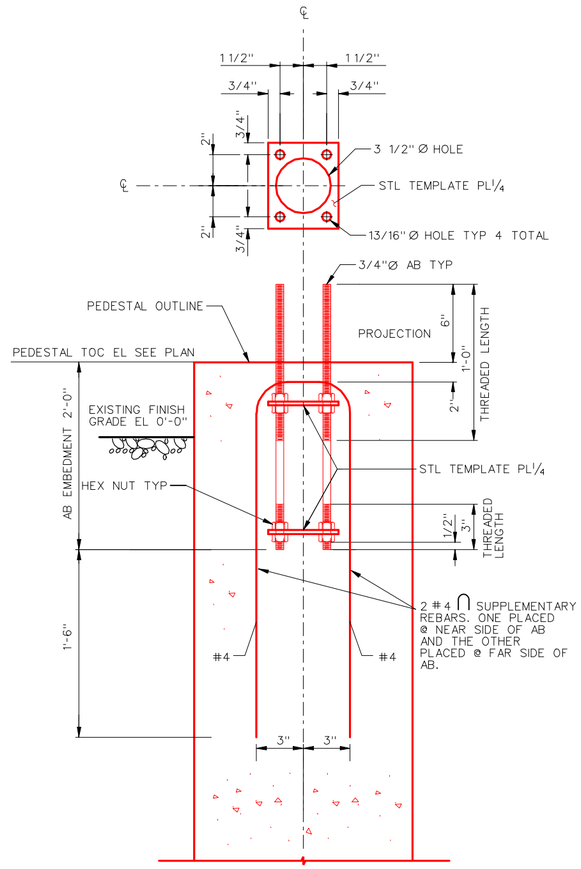

2 TYP PT STEEL SUPPORT AB ASSEMBLY DETAIL

SCALE: NTS

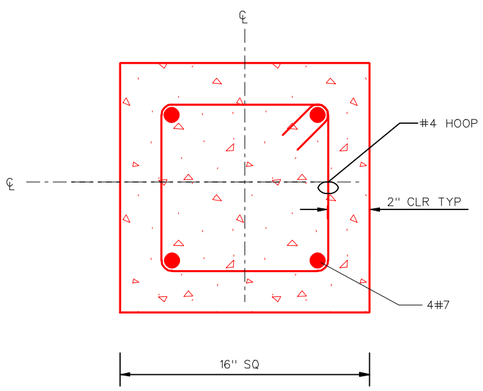

3 TYP FTG F2 PEDESTAL REINFORCING STEEL DETAIL

SCALE: NTS

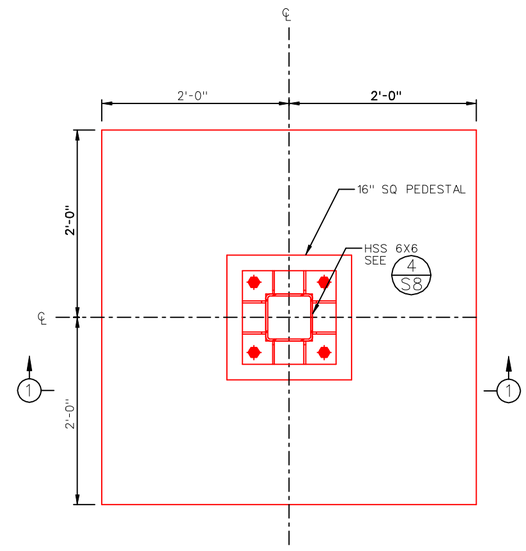

FTG F2 PLAN

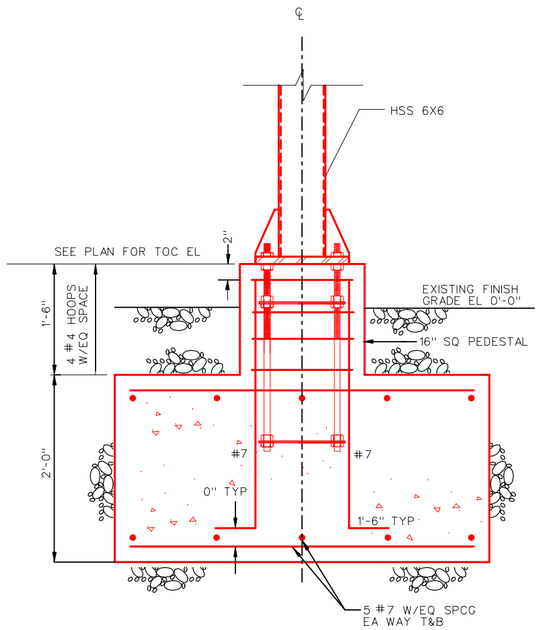

SECTION 1 - 1

NOTES:

1. FOR ANCHOR BOLTS, SEE DETAIL 2 TYP
2. FOR PEDESTAL REINFORCEMENT, SEE DETAIL 3 TYP

1 PT STEEL SUPPORT FTG F2 DETAIL

SCALE: NTS

SYMBOL	ZONE	DESCRIPTION	DATE	BY
		REVISIONS		
		SHEET ADDED BY AMENDMENT NO. 0002	18 APR 03	

HYDROELECTRIC DESIGN CENTER
PORTLAND, OR

U.S. ARMY ENGINEER DISTRICT
CORPS OF ENGINEERS
SAVANNAH, GEORGIA

HARTWELL MAJOR REHABILITATION - PHASE 2
HARTWELL DAM AND LAKE
SWITCHYARD UPGRADE

PT STEEL SUPPORT FOUNDATION
PLAN AND DETAILS

SAVANNAH RIVER GEORGIA AND S. CAROLINA

SIZE	INVITATION NO.	FILE NO.	PLATE
F	DACW21-03-B-0007	HAR0157	S-07
SCALE:		SHEET 16A	

18-Apr-2003
10:29:4

HAP103TB.DGN HAP103S07.DGN

...\ebs_dgn\Har0157\HAP103S07.dgn 04/21/2003 03:35:03 PM

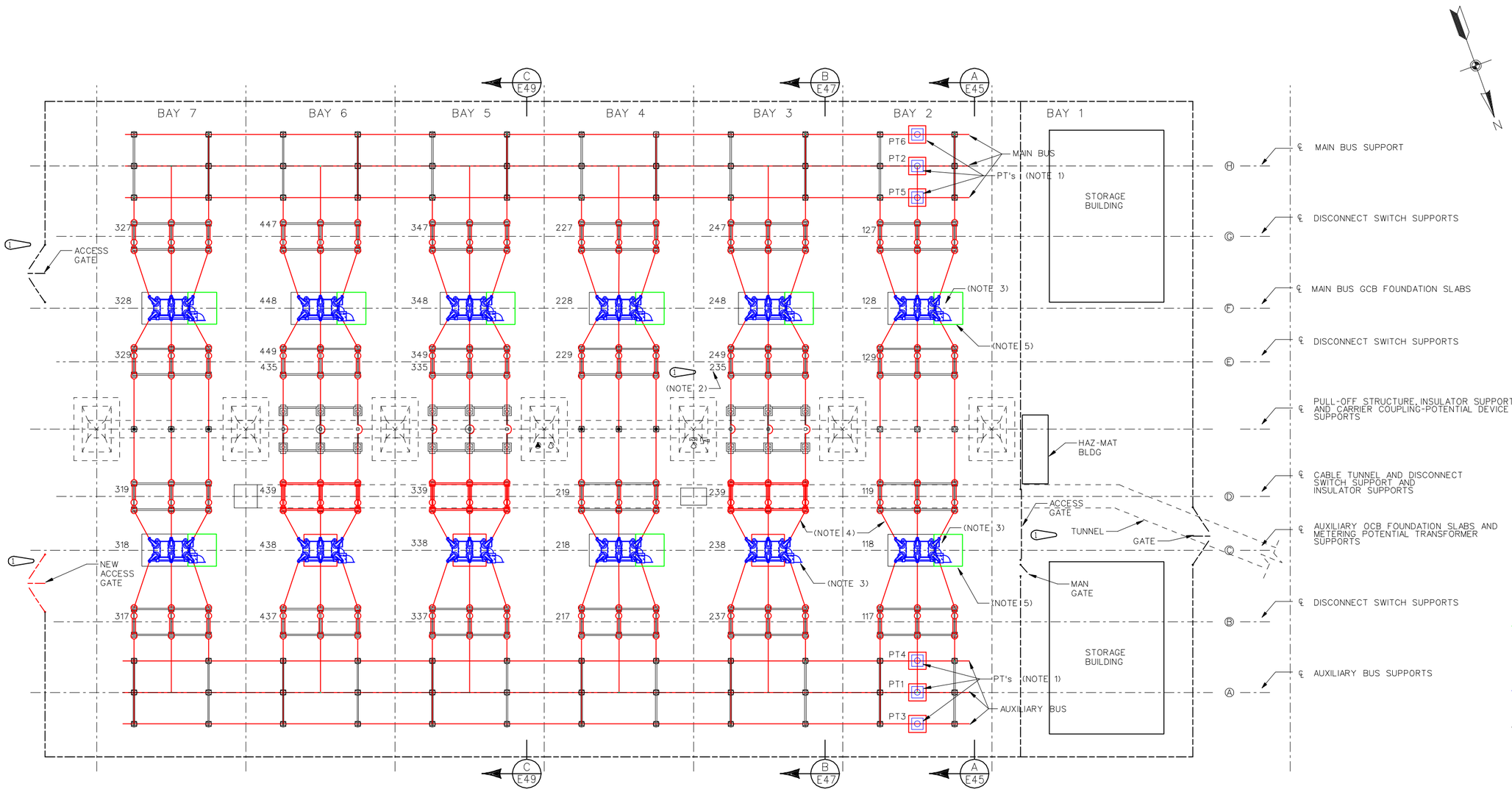

PLAN-SWITCHYARD LAYOUT

SCALE: 1/16" = 1'-0"
2'0 10' 20' 30'

BREAKER SERIAL NO.	CT'S ON 1,3,5 SIDE	CT'S ON 2,4,6 SIDE	BREAKER ASSIGNMENT
4378	1	2	118
4379	1	1	128
4380A	1	2	238
4380B	1	2	218
4381A	1	1	228
4381B	1	1	328
4382A	2	1	248
4382B	2	1	348
4383A	2	1	448
4383B	1	2	338
4384A	1	2	438
4384B	1	2	318

GAS CIRCUIT BREAKER ASSIGNMENT BY SERIAL NUMBER AND CT ARRANGEMENT

LEGEND:

(GREEN LINE) EQUIPMENT WITH ITEMS TO BE REMOVED, REPLACED, OR DISPOSED OF BY CONTRACTOR

(RED LINE) EQUIPMENT WITH ITEMS FURNISHED AND/OR INSTALLED BY CONTRACTOR

(BLUE LINE) GOVERNMENT FURNISHED EQUIPMENT INSTALLED BY THE CONTRACTOR UNDER THIS CONTRACT.

(BLACK LINE) EXISTING EQUIPMENT

NOTES:

1. SYNCHRONIZING PT'S RELOCATED FROM LINE BUS TO EAST END OF MAIN AND AUXILIARY BUSES. PT'S NO. 1 AND 2 SHALL BE INSTALLED ON PHASE B. SEE DRAWING E41. NEW STEEL PEDESTAL AND CONCRETE FOOTINGS REQUIRED.
2. DEVICE NUMBERS 235, 335, AND 435 IDENTIFY THE GROUNDING SWITCH.
3. CONTROL CONDUITS SHALL BE INSTALLED AS SHOWN IN DETAILS ON DRAWING E-54.
4. TEMPORARY CONNECTIONS BETWEEN NEW GCB'S AND EXISTING DISCONNECTS SHALL BE USED UNTIL THE DISCONNECTS ARE REPLACED, SHALL BE 750MCM STINGER CABLES. PERMANENT BUS TUBING SHALL BE INSTALLED AT THESE LOCATIONS WHEN NEW DISCONNECTS ARE INSTALLED.
5. A SECTION OF THE EXISTING CONCRETE BREAKER PAD SHALL BE REMOVED TO FACILITATE CONDUIT ROUTING FROM THE TUNNEL TO THE NEW BREAKER CONTROL BOX AS DONE IN BAYS THREE, FIVE, AND SIX WITH THE NEW BREAKER PADS. SEE DRAWING E-54 FOR MORE INFORMATION.

SYMBOL	ZONE	DESCRIPTION	DATE	BY
1	D-5,C-3	REVISED IN ACCORDANCE WITH AMENDMENT NO. 0002	18 APR 03	

REVISIONS

HYDROELECTRIC DESIGN CENTER
PORTLAND, OR

U.S. ARMY ENGINEER DISTRICT
CORPS OF ENGINEERS
SAVANNAH, GEORGIA

HARTWELL MAJOR REHABILITATION - PHASE 2
HARTWELL DAM AND LAKE
SWITCHYARD UPGRADE
SWITCHYARD PLAN
NEW CONFIGURATION
SAVANNAH RIVER GEORGIA AND S. CAROLINA

SIZE	INVITATION NO.	FILE NO.	PLATE
F	DACW21-03-B-0007	HAR0157	E-42

SCALE: SHEET 58

HAP103TB.DGN HAP103E42.DGN

...\ebs_dgn\Har0157\HAP103E42.dgn 04/21/2003 12:49:42 PM

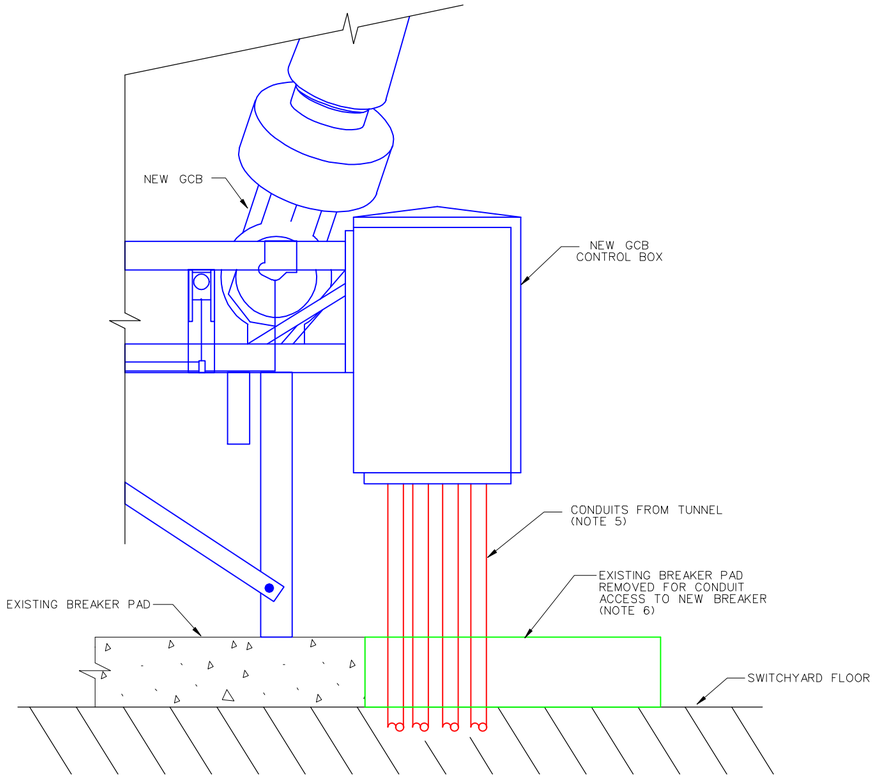

NEW GCB CONDUIT ROUTING
USING EXISTING BREAKER PAD

NTS

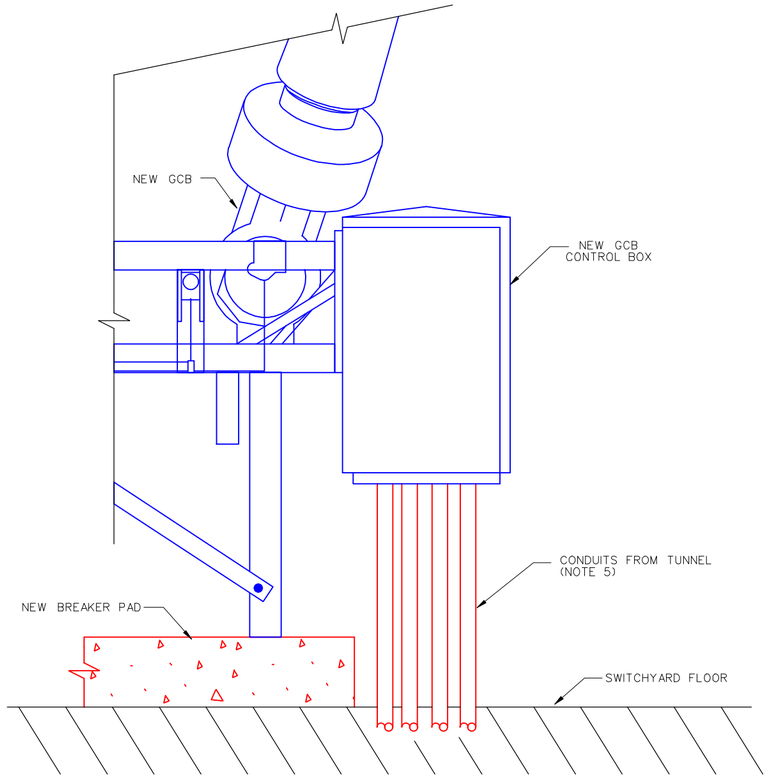

NEW GCB CONDUIT ROUTING
USING NEW BREAKER PAD

NTS

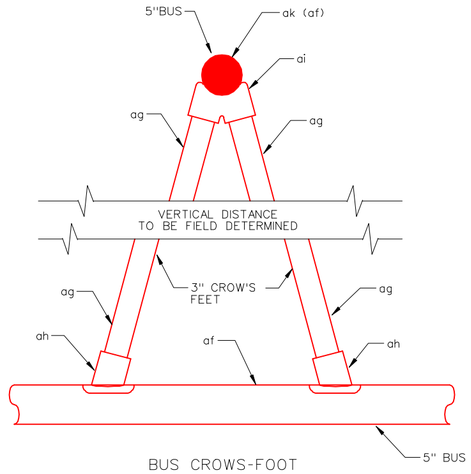

BUS CROWS-FOOT

NTS

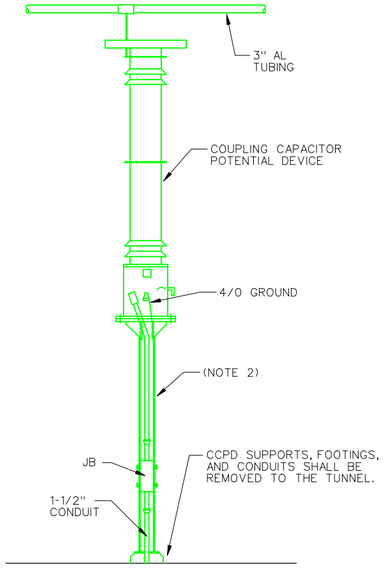

MAIN BUS COUPLING CAPACITOR
POTENTIAL DEVICE

NTS

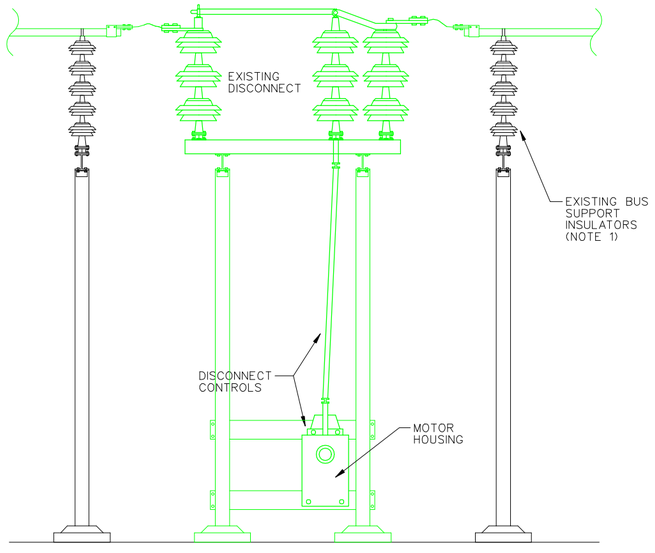

MOD 101 REMOVAL
SEE DRAWING E-41

NTS

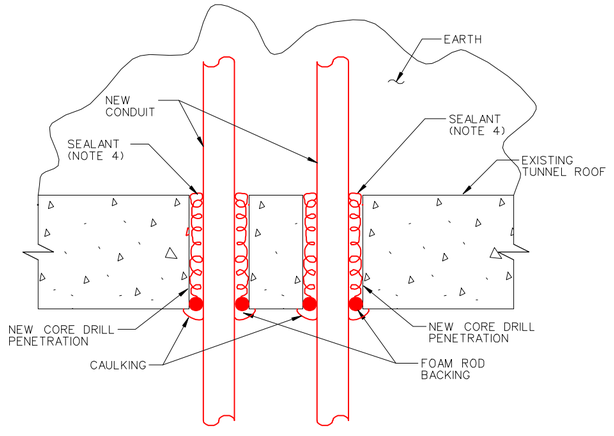

TUNNEL PENETRATIONS

NOTE: THIS IS A SUGGESTED METHOD OF THE CONDUIT/PENETRATION INSTALLATION IN THE TUNNEL ROOF, THE CONTRACTOR MAY SUBMIT OTHER METHODS OF INSTALLATION FOR APPROVAL.

NTS

NOTES:

1. EXISTING BUS SUPPORT INSULATORS SHALL BE CLEANED, AND TESTED AS PER SPECIFICATION SECTION 16050 BEFORE REUSE.
2. AFTER EQUIPMENT IS REMOVED, REMOVE EXISTING CONDUIT BACK TO THE TUNNEL. SEAL AND ABANDON PENETRATION INTO TUNNEL. (1)
3. HEIGHT OF PULL BOX ABOVE BREAKER PAD AND SWITCHYARD FLOOR SHALL BE DETERMINED BY THE CONTRACOTR TO ALLOW EASE OF CONDUIT INSTALLATION.
4. SEALANT SHALL BE A WEATHER, MOISTURE, CHEMICAL RESISTANT SUBSTANCE SUITABLE FOR SEALING EMBEDDED CONCRETE PENETRATIONS. "REVERE X-JT SEAL AND F-126 JOINT FILLER" ARE SUITABLE SEALANT MATERIALS. CONTRACTOR SHALL SUBMIT FOR APPROVAL.
5. REFER TO CONDUIT AND CABLE SCHEDULES FOR REQUIRED CONDUITS TO NEW GCB'S.
6. CONTRACTOR SHALL REMOVE END OF EXISTING BREAKER PADS TO ALLOW ACCESS TO CONTROL BOX BY CONDUITS BELOW. SUFFICIENT CONCRETE SHALL REMAIN FOR BREAKER SUPPORT AS WITH NEW CONCRETE PADS.

SYMBOL	ZONE	DESCRIPTION	DATE	BY
		REVISIONS		
(1)	B-1	REVISED IN ACCORDANCE WITH AMENDMENT NO. 0002	18 APR 03	

HYDROELECTRIC DESIGN CENTER
PORTLAND, OR

U.S. ARMY ENGINEER DISTRICT
CORPS OF ENGINEERS
SAVANNAH, GEORGIA

HARTWELL MAJOR REHABILITATION - PHASE 2
HARTWELL DAM AND LAKE
SWITCHYARD UPGRADE
VIEWS AND DETAILS
SHEET 1
SAVANNAH RIVER GEORGIA AND S. CAROLINA

SIZE	INVITATION NO.	FILE NO.	PLATE
F	DACW21-03-B-0007	HAR0157	E-54
SCALE:		SHEET 70	

17 Apr 2003
142501

HAP103TB.DGN HAP103E54.DGN

...\ebs_dgn\Har0157\HAP103E54.dgn 04/21/2003 12:55:12 PM

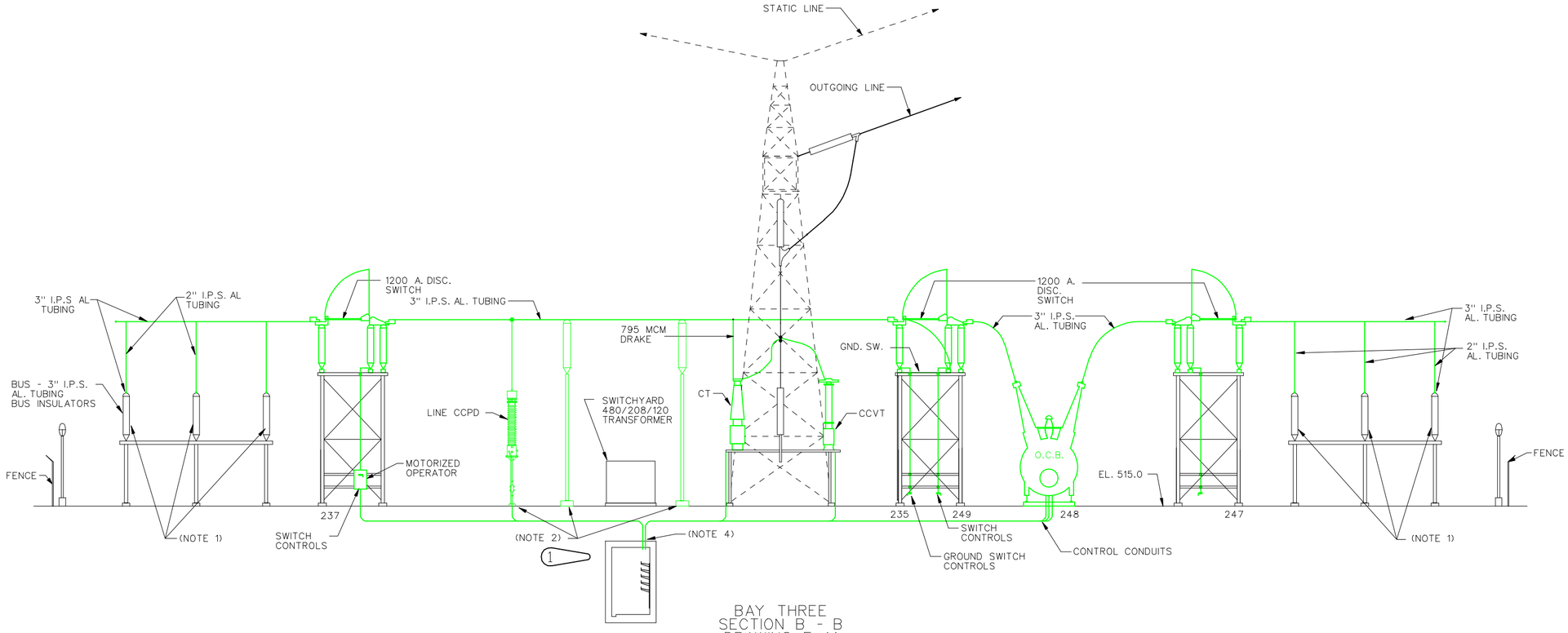

BAY THREE
SECTION B - B
DRAWING E-41

SCALE: 1/8" = 1'-0"
12"0 5' 10' 15'

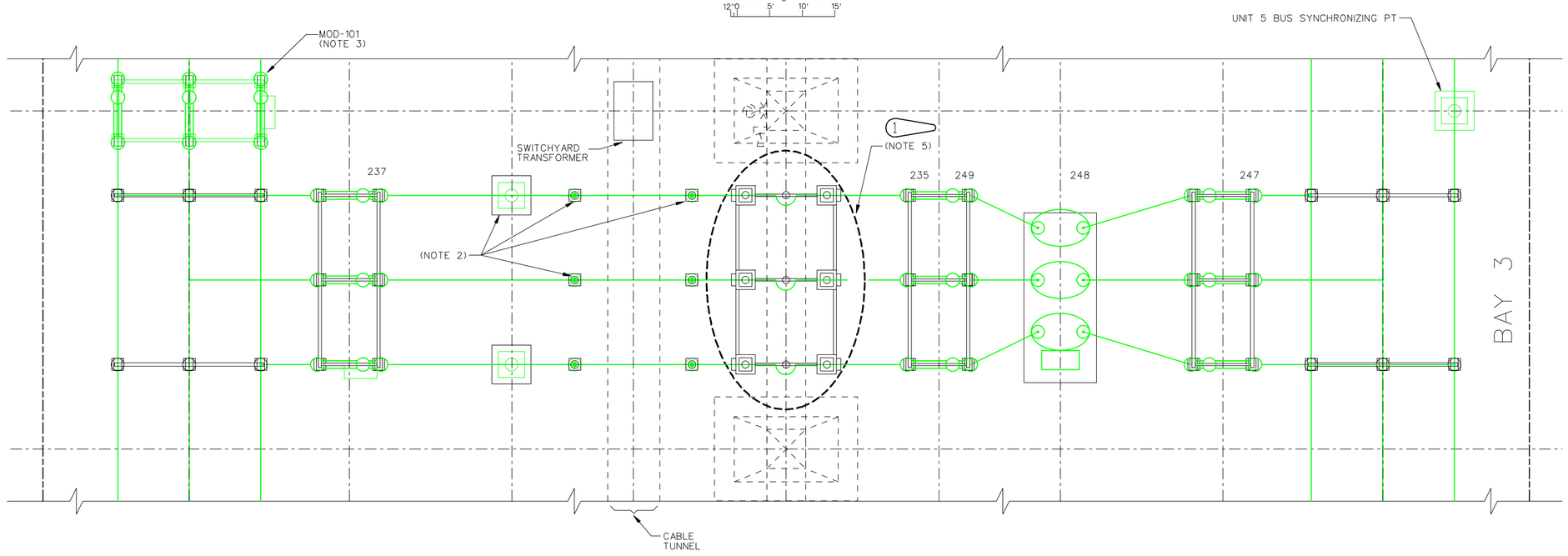

BAY THREE
PLAN VIEW

SCALE: 1/8" = 1'-0"
12"0 5' 10' 15'

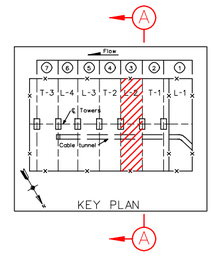

LEGEND:

(GREEN LINE) EQUIPMENT WITH ITEMS TO BE REMOVED, REPLACED, OR DISPOSED OF BY CONTRACTOR

(RED LINE) EQUIPMENT WITH ITEMS FURNISHED AND/OR INSTALLED BY CONTRACTOR

(BLUE LINE) GOVERNMENT FURNISHED EQUIPMENT INSTALLED THIS CONTRACT.

(BLACK LINE) EXISTING FEATURE

NOTES:

1. EXISTING BUS INSULATORS SHALL BE CLEANED AND TESTED AS PER SECTION 16050 AND REUSED.
2. EXISTING CONCRETE FOOTINGS SHALL BE REMOVED FOR EQUIPMENT BEING REMOVED OR RELOCATED.
3. MOD-101 SHALL BE REMOVED WITH ALL CONTROLS, SUPPORTS, FOOTINGS, AND CABLES.
4. EXISTINIG CONDUITS BETWEEN TUNNEL AND EXISTING EQUIPMENT SHALL BE REMOVED AND NEW CONDUITS INSTALLED BETWEEN EQUIPMENT AND TUNNEL. EXISTING CONDUITS SHALL BE DRILLED OUT OF TUNNEL ROOF, NEW CONDUITS INSTALLED AND SEALED WITH POR-CRAX HP AS PER DETAIL DRAWING E-54

1

5. EQUIPMENT NOT SHOWN, WORK WITH DRAWING E-52.

SYMBOL	ZONE	DESCRIPTION	DATE	BY
1	A-1,B-3 C-4	REVISED IN ACCORDANCE WITH AMENDMENT NO. 0002	18 APR 03	

REVISIONS

HYDROELECTRIC DESIGN CENTER
PORTLAND, OR

U.S. ARMY ENGINEER DISTRICT
CORPS OF ENGINEERS
SAVANNAH, GEORGIA

HARTWELL MAJOR REHABILITATION - PHASE 2
HARTWELL DAM AND LAKE
SWITCHYARD UPGRADE
SWITCHYARD BAY 3
EQUIPMENT REMOVAL
SAVANNAH RIVER GEORGIA AND S. CAROLINA

SIZE	INVITATION NO.	FILE NO.	PLATE
F	DACW21-03-B-0007	HAR0157	E-46

SCALE: SHEET 62

17 Apr 2003
12:52:43

HAP103TB.DGN HAP103E46.DGN

...\ebs_dgn\Har0157\HAP103E46.dgn 04/21/2003 12:52:43 PM

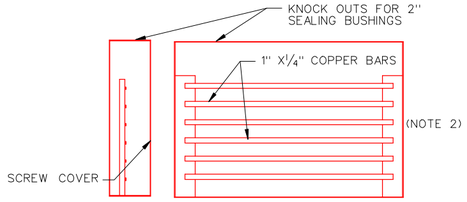

DETAIL - A
C.T. BUS DIFFIFFERENTIAL
EXISTING BOX Y-4 AND NEW Y-5

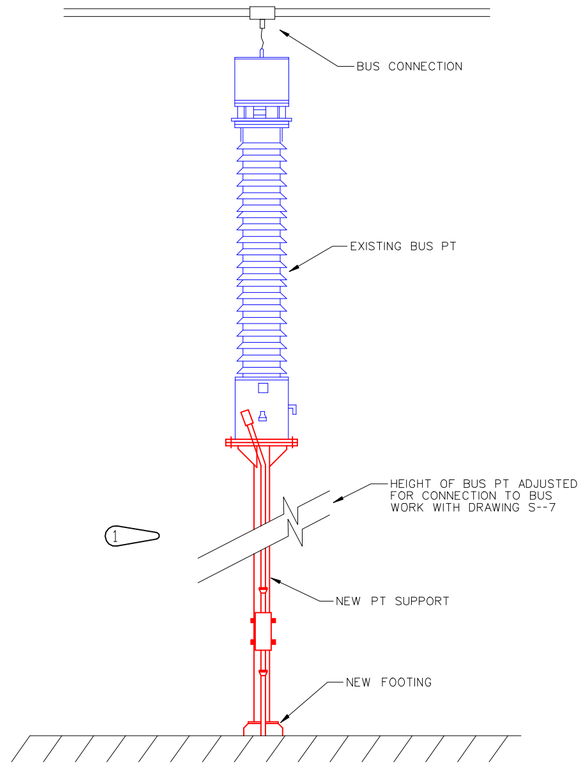

SWITCHYARD BUS PT

(NOTE 3)

ITEM NO.	DESCRIPTION	MANUFACTURER	PART NO.	
aa	LIGHTNING ARRESTOR DOBLE TEST TERMINAL: 4-HOLE TO	LAPP	B64033-70	
ab	DOBLE TEST TERMINAL, BUSHING: 4-HOLE TO 4-HOLE,	LAPP	B-63037	
ac	TERMINAL CONNECTOR, WELD-ON, 4-HOLE TO END OF 5 INCH	SEFCOR	WFT-67-4B	
ad4	WELD-ON TEE CONNECTOR: 4-HOLE TO 5 INCH TUBE	SEFCOR	WTF-6269-4B	
ad2	WELD-ON TEE CONNECTOR: 2-HOLE TO 5 INCH TUBE	SEFCOR	WTF-6269-2B	
ae	BUS SUPPORT, SLIP, 5 INCH	SEFCOR	WTSI-67-5	
af	5 INCH AL TUBING			
ag	3 INCH AL TUBING			
ah	ANGLE WELDMENT, 15 DEGREE; BOTTOM OF CROW'S FOOT	SEFCOR	WFTT15-6762	
ai	ANGLE WELDMENT, 15 DEGREE; TOP OF CROW'S FOOT	SEFCOR	WFVT15-6762	
aj	WELDMENT EXPANSION SOUPLER: 5 INCH TUBING	SEFCOR	WXCF-6767	
ak	WELDED INTERNAL FIT CORONA BELL	SEFCOR	ABIR-67	
al	TEE, CABLE TO FLAT, 2-HOLE	SEFCOR	ACF-34-2B	
am	TEE, CABLE TO FLAT, 4-HOLE	SEFCOR	ACF-34-4B	
an	TEE WELDMENT, 5 INCH MAIN TO 3 INCH TAP	SEFCOR	WFTT-6762	
ao	HORIZONTAL BUS SUPPORT WELDMENT, WELD TO MAIN BUS	SEFCOR	WCTI-67-5	
ap	TERMINAL CONNECTOR, WELD-ON, 3 INCH TUBE TO 2-HOLE PAD; WELD TO END OF 3 INCH TUBE	SEFCOR	WFT-62-2B	
aq	TERMINAL, CABLE TO 4-HOLE	SEFCOR	AFN-34-4B	
ar	TERMINAL, 2-CABLE TO 4-HOLE FLAT PAD	SEFCOR	AFNC2-34-4B	
as	TEE, CABLE TO CABLE,	SEFCOR	ACRCT-3434	
at	750 AWG AL CABLE			

SWITCHYARD BUS AND FITTINGS
BILL OF MATERIALS
(NOTE 1)

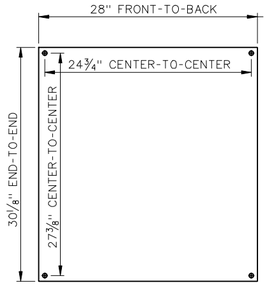

LINE NO. 4 PT BASE LAYOUT
SQUARE-D PT'S

NTS

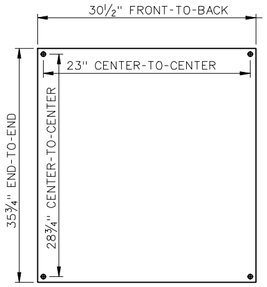

LINE NO. 2 AND 3 PT BASE LAYOUT
ABB PT'S

NTS

NOTES:

1. ITEMS IN BILL OF MATERIALS ARE A SUGGESTED FITTING OR PIECE OF EQUIPMENT THAT WILL WORK FOR THIS APPLICATION. THE CONTRACTOR SHALL SUBMIT FOR APPROVAL ALL EQUIPMENT TO BE INSTALLED UNDER THIS CONTRACT.
2. SEE DRAWING E-56 FOR LOCATION OF CT CONNECTION BOXES IN CABLE TUNNEL.
3. SUPPORTS FOR RELOCATED BUS PT'S MAY REQUIRE ADJUSTMENT TO ALLOW FOR A CLEAN CONNECTION TO THE BUS TUBBING ABOVE.
4. NEW PT SUPPORTS USE BASE PLATES AS INDICATED. SUPPORT HEIGHT ADJUSTED TO ALLOW FOR CONNECTION TO BUS TUBING. WORK THIS DRAWING WITH DRAWING S-07.

1

SYMBOL	ZONE	DESCRIPTION	DATE	BY
		REVISIONS		
1	A-5,A-1	REVISED IN ACCORDANCE WITH AMENDMENT NO. 0002	18 APR 03	

HYDROELECTRIC DESIGN CENTER
PORTLAND, OR

U.S. ARMY ENGINEER DISTRICT
CORPS OF ENGINEERS
SAVANNAH, GEORGIA

HARTWELL MAJOR REHABILITATION - PHASE 2
HARTWELL DAM AND LAKE
SWITCHYARD UPGRADE
VIEWS AND DETAILS
SHEET 2
SAVANNAH RIVER GEORGIA AND S. CAROLINA

SIZE	INVITATION NO.	FILE NO.	PLATE
F	DACW21-03-B-0007	HAR0157	E-55
SCALE:		SHEET 71	

17 APR 2003 14:43:37

HAP103TB.DGN HAP103E55.DGN

...\ebs_dgn\Har0157\HAP103E55.dgn 04/21/2003 12:59:43 PM

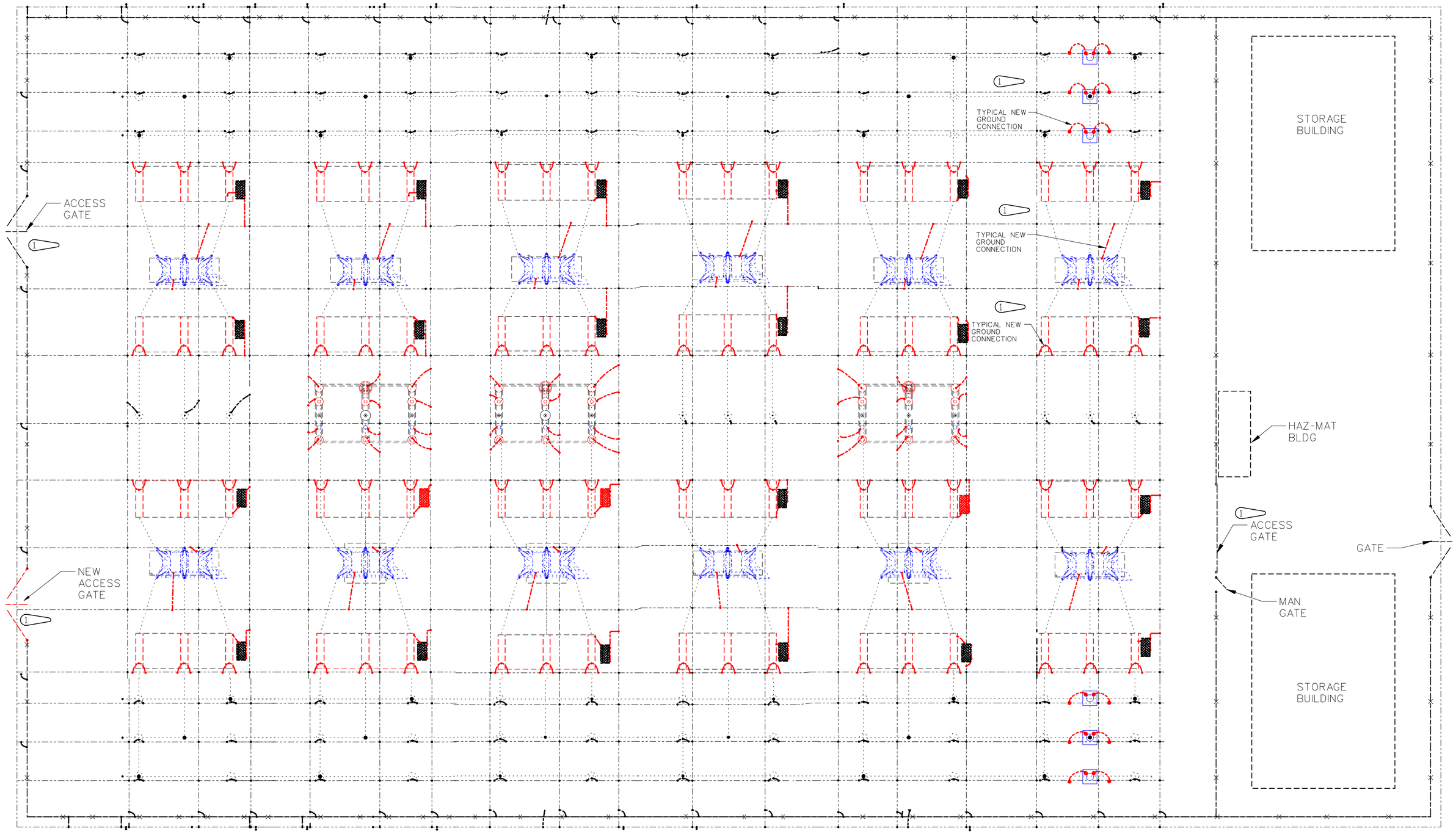

LEGEND:

- EXISTING GROUND GRID CONDUCTORS
- NEW GROUND CONNECTIONS FOR EQUIPMENT INSTALLED UNDER THIS CONTRACT.
- NEW GROUND CONNECTIONS INSTALLED UNDER THIS CONTRACT.
- NEW STEP POTENTIAL GRATES INSTALLED UNDER THIS CONTRACT.

NOTES:

1. NOT ALL GROUND CONNECTIONS ARE SHOWN FOR CLARITY AND DOES NOT RELEASE THE CONTRACTOR'S RESPONSIBILITY FOR ALL GROUND CONNECTIONS AS INDICATED IN THE SPECIFICATIONS.
2. ALL NEW GROUND CONDUCTORS TO EQUIPMENT INSTALLED UNDER THIS CONTRACT SHALL BE NEW AND CONTINUOUS FROM THE EQUIPMENT TO THE SWITCHYARD GRID.
3. REFER TO APPENDIX 'A' SECTION 16050.
4. THE MINIMUM GOUNDING CONDUCTOR SIZE FOR ALL NEW EQUIPMENT OR FOR REPLACING AN EXISTING GROUND SHALL BE NO. 4/0 AWG AS PER SECTION 16050.

SYMBOL	ZONE	DESCRIPTION	DATE	BY
1	C-5	REVISED IN ACCORDANCE WITH AMENDMENT NO. 0002	18 APR 03	

REVISIONS

HYDROELECTRIC DESIGN CENTER
PORTLAND, OR

U.S. ARMY ENGINEER DISTRICT
CORPS OF ENGINEERS
SAVANNAH, GEORGIA

HARTWELL MAJOR REHABILITATION - PHASE 2
HARTWELL DAM AND LAKE
SWITCHYARD UPGRADE
SWITCHYARD
GROUNDING PLAN
SAVANNAH RIVER GEORGIA AND S. CAROLINA

SIZE	INVITATION NO.	FILE NO.	PLATE
F	DACW21-03-B-0007	HAR0157	E-66

SCALE: SHEET 82

18 Apr 2003
08:21:56

HAP103TB.DGN HAP103E66.DGN

...\ebs_dgn\Har0157\HAP103E66.dgn 04/21/2003 01:02:51 PM

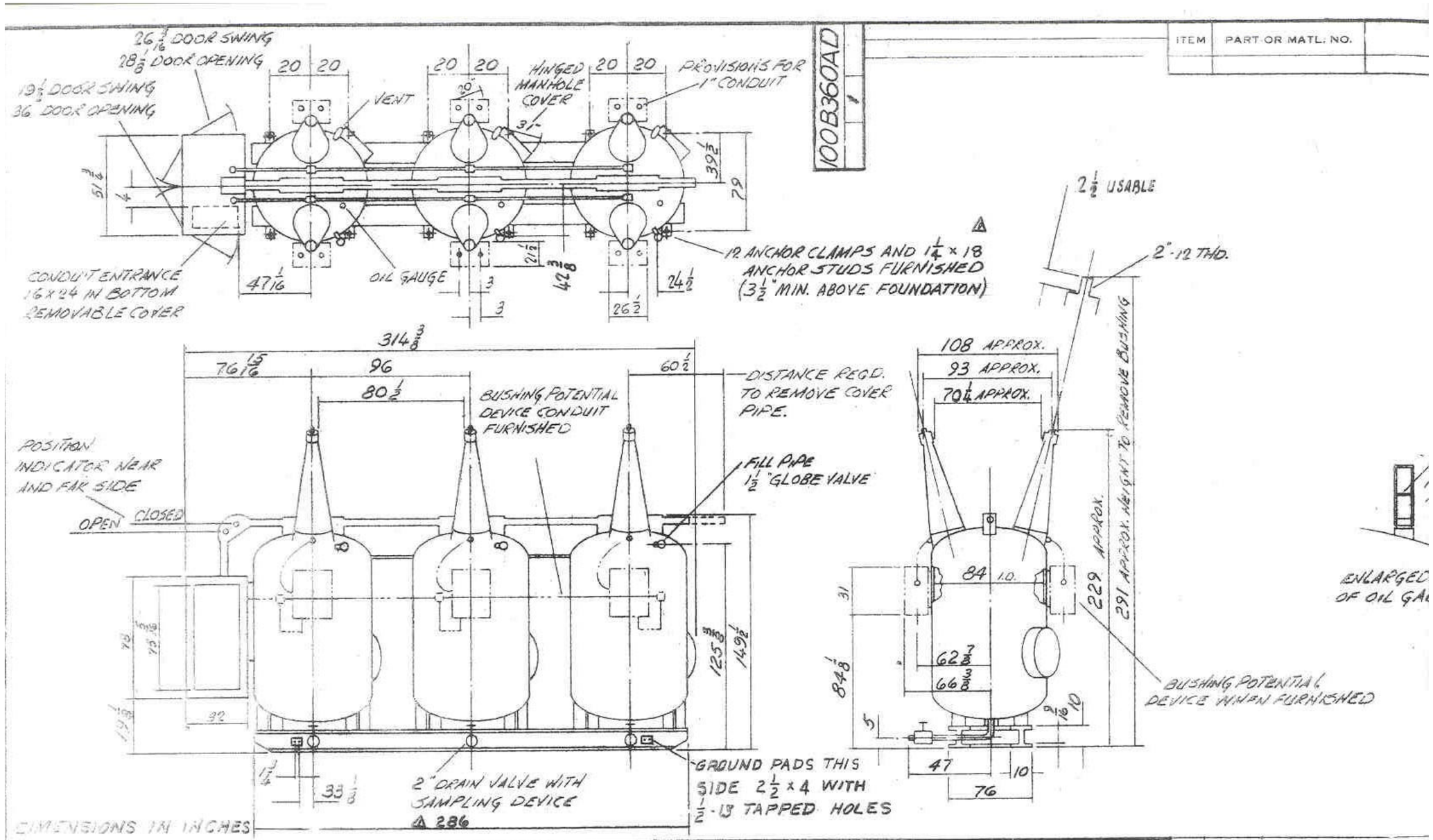

100B360AD

ITEM	PART OR MATL. NO.

TYPE	230 K 10000-16
VOLTAGE KV	230
CURRENT AMPS.	1600
INTERRUPTING MVA	10000
INTERRUPTING CURRENT KA	25
IMPULSE WITHSTAND KV	900
BREAKER STROKE	17 ± 1/4
WEIGHT WITH OIL LBS.	96173
WEIGHT LESS OIL LBS.	45300
WEIGHT LESS OIL & SUPPORTING LBS.	36500
OIL PER TANK GALS.	2261

IF NOT OTHERWISE SPECIFIED
TOLERANCE ON DECIMAL DIM. ± .005" ON FRACTIONAL DIM. ± 1/64. FOR MACH., ± 1/32 FOR STRUCTURAL; ANGULAR DIM. FOR MACH. ± 10' OTHERWISE ± 1/2°

NO.	DATE	REVISION
1	12-30-60	ADD DIMS-286

DRAWN	CHECKED	APPROVED
DAW	RR	
SCALE	DATE	S.O.
	11-21-60	L-3124

TITLE: OUTLINE OF OIL CIRCUIT BREAKER 118 & 218

I-T-E CIRCUIT BREAKER COMPANY
POWER CIRCUIT BREAKER DIVISION
1087 NORTH MAIN STREET, LOS ANGELES 12, CALIFORNIA

SYMBOL	ZONE	DESCRIPTION	DATE	BY
		SHEET ADDED BY AMENDMENT NO. 0002	18 APR 03	

REVISIONS

HYDROELECTRIC DESIGN CENTER, PORTLAND, OR
U.S. ARMY ENGINEER DISTRICT, CORPS OF ENGINEERS, SAVANNAH, GEORGIA

HARTWELL MAJOR REHABILITATION - PHASE 2
HARTWELL DAM AND LAKE
SWITCHYARD
I-T-E CIRCUIT BREAKER COMPANY
SHOP DRAWING
SAVANNAH RIVER GEORGIA AND S. CAROLINA

SIZE	INVITATION NO.	FILE NO.	PLATE
F	DACW21-03-B-0007	HAR0157	R-68

SCALE: | SHEET 176

23 APR 2003

ITE_OCB.TIF | ITE_OCB.DGN

...\Har0157\shopdgns\ITE_OCB.dgn 04/28/2003 01:06:37 PM

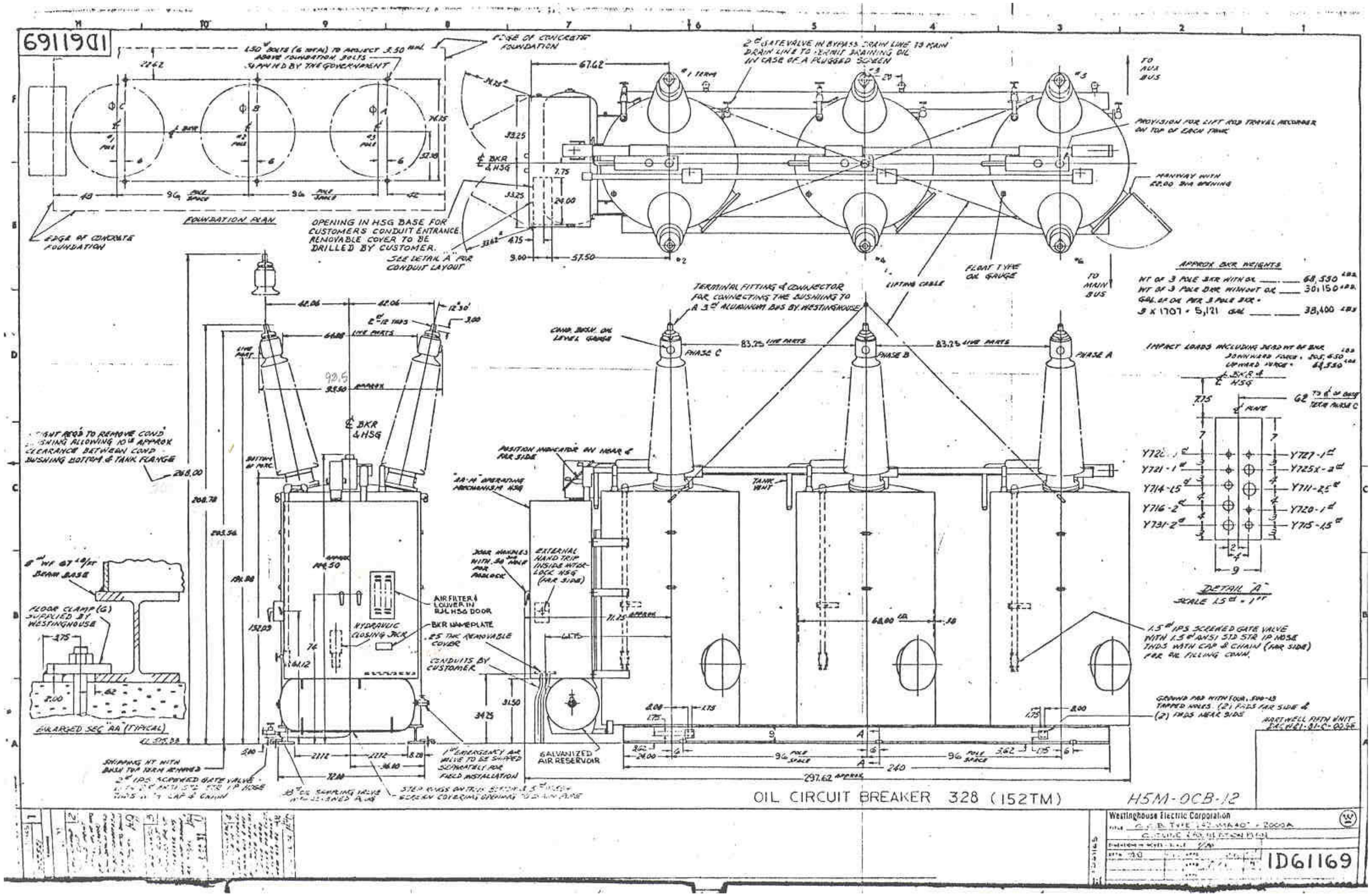

SYMBOL	ZONE	DESCRIPTION	DATE	BY
		SHEET ADDED BY AMENDMENT 0002	18 APR 03	

REVISIONS

HYDROELECTRIC DESIGN CENTER
PORTLAND, OR

U.S. ARMY ENGINEER DISTRICT
CORPS OF ENGINEERS
SAVANNAH, GEORGIA

HARTWELL MAJOR REHABILITATION - PHASE 2
HARTWELL DAM AND LAKE
SWITCHYARD
WESTINGHOUSE OCB 318
SHOP DRAWING
SAVANNAH RIVER GEORGIA AND S. CAROLINA

SIZE	INVITATION NO.	FILE NO.	PLATE
F	DACW21-03-B-0007	HAR0157	R-69

SCALE: SHEET 177

23 Apr 2003
08:30:20

WESTINGHOUSE 319_OCB.TIF WH_OCB_318.DGN

...\shopdgns\WH_OCB_318.DGN 04/28/2003 01:04:57 PM

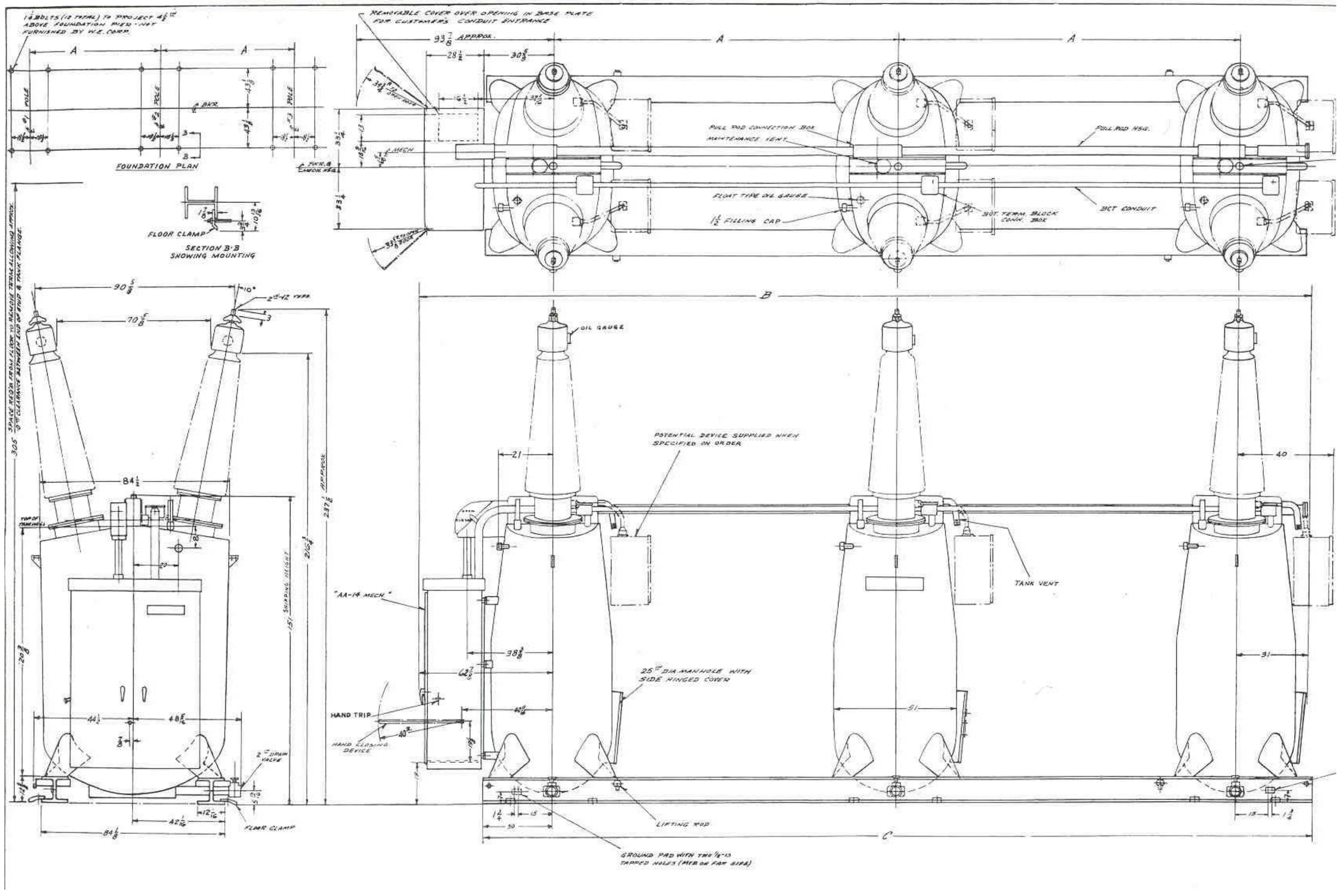

SYMBOL	ZONE	DESCRIPTION	DATE	BY
		SHEET ADDED BY AMENDMENT NO. 0002	18 APR 03	

REVISIONS

HYDROELECTRIC DESIGN CENTER
PORTLAND, OR

U.S. ARMY ENGINEER DISTRICT
CORPS OF ENGINEERS
SAVANNAH, GEORGIA

HARTWELL MAJOR REHABILITATION - PHASE 2
HARTWELL DAM AND LAKE
SWITCHYARD
WESTINGHOUSE OCB 448
SHOP DRAWING
SAVANNAH RIVER GEORGIA AND S. CAROLINA

SIZE	INVITATION NO.	FILE NO.	PLATE
F	DACW21-03-B-0007	HAR0157	R-70

SCALE: SHEET 178

23 Apr 2003
08:34:45

WESTINGHOUSE 448_OCB.TIF WH_OCB_448.DGN

...\shopdgns\WH_OCB_448.DGN.dgn 04/28/2003 01:05:55 PM