US Army Corps
of Engineers
Savannah District

Seymour Johnson AFB
North Carolina

Solicitation Number
W912HN-04-R-0035
Fire/Crash Rescue Station
Volume II of III
Technical Provisions - Divisions 3 through 13
FY-04, Line Item VKAG973004
June 2004

THIS SOLICITATION IS UNRESTRICTED PURSUANT TO THE
"BUSINESS OPPORTUNITY DEVELOPMENT REFORM ACT OF 1988"
(PUBLIC LAW 100-656)

U.S. ARMY ENGINEER DISTRICT, SAVANNAH
CORPS OF ENGINEERS
100 WEST OGLETHORPE AVENUE
SAVANNAH, GEORGIA 31401-3640

PROJECT TABLE OF CONTENTS

DIVISION 01 - GENERAL REQUIREMENTS

01312A QUALITY CONTROL SYSTEM (QCS)
01330 SUBMITTAL PROCEDURES
01335 SUSTAINABLE DESIGN AND DEVELOPMENT
01355A ENVIRONMENTAL PROTECTION
01420 SOURCES FOR REFERENCE PUBLICATIONS
01451A CONTRACTOR QUALITY CONTROL
01452A SPECIAL INSPECTION FOR SEISMIC-RESISTING SYSTEMS
01500 TEMPORARY CONSTRUCTION FACILITIES
01572 CONSTRUCTION AND DEMOLITION WASTE MANAGEMENT
01670 RECYCLED / RECOVERED MATERIALS
01780A CLOSEOUT SUBMITTALS
01781 OPERATION AND MAINTENANCE DATA

DIVISION 02 - SITE CONSTRUCTION

02091 PCB BALLASTS, TRANSFORMERS AND HAZARDOUS WASTE LAMP REMOVAL AND RECYCLING
02220 DEMOLITION
02231 CLEARING AND GRUBBING
02300 EARTHWORK
02315 EXCAVATION, FILLING AND BACKFILLING FOR BUILDINGS
02316 EXCAVATION, TRENCHING, AND BACKFILLING FOR UTILITIES SYSTEMS
02364 TERMITICIDE TREATMENT MEASURES FOR SUBTERRANEAN TERMITE CONTROL
02510A WATER DISTRIBUTION SYSTEM
02531 SANITARY SEWERS
02547 BITUMINOUS PAVEMENT WITH BASE COURSE
02555A PREFABRICATED UNDERGROUND HEATING/COOLING DISTRIBUTION SYSTEM
02630A STORM-DRAINAGE SYSTEM
02754A CONCRETE PAVEMENTS FOR SMALL PROJECTS
02760A *2 FIELD MOLDED SEALANTS FOR SEALING JOINTS IN RIGID PAVEMENTS
02763A PAVEMENT MARKINGS
02770A CONCRETE SIDEWALKS AND CURBS AND GUTTERS
02840A ACTIVE VEHICLE BARRIERS
02870 SITE FURNISHINGS
02921A SEEDING
02922A SODDING
02930A EXTERIOR PLANTING

DIVISION 03 - CONCRETE

03100A STRUCTURAL CONCRETE FORMWORK
03150A EXPANSION JOINTS, AND CONTRACTION JOINTS
03200A CONCRETE REINFORCEMENT
03300A CAST-IN-PLACE STRUCTURAL CONCRETE

DIVISION 04 - MASONRY

04200 MASONRY
04215 PREFACED CONCRETE MASONRY UNITS

DIVISION 05 - METALS

05120 STRUCTURAL STEEL
05210A STEEL JOISTS
05310 STEEL DECKS

05400 COLD-FORMED METAL FRAMING
05450 PRE-ENGINEERED LIGHT GAUGE STEEL TRUSSED FRAMES
05500A MISCELLANEOUS METAL

DIVISION 06 - WOOD AND PLASTICS

06100A ROUGH CARPENTRY
06200A FINISH CARPENTRY
06410A LAMINATE CLAD ARCHITECTURAL CASEWORK

DIVISION 07 - THERMAL AND MOISTURE PROTECTION

07141N FLUID-APPLIED WATERPROOFING
07413A METAL SIDING
07416A STRUCTURAL STANDING SEAM METAL ROOF (SSSMR) SYSTEM
07600 FLASHING AND SHEET METAL
07840 FIRESTOPPING
07900A JOINT SEALING

DIVISION 08 - DOORS AND WINDOWS

08110 STEEL DOORS AND FRAMES
08120 ALUMINUM DOORS AND FRAMES
08210 WOOD DOORS
08331A METAL ROLLING COUNTER DOOR (FIRE SHUTTER)
08361 SECTIONAL OVERHEAD DOORS
08520A ALUMINUM AND ENVIRONMENTAL CONTROL ALUMINUM WINDOWS
08633 FIBERGLASS-SANDWICH-PANEL SYSTEMS
08710 DOOR HARDWARE
08810A GLASS AND GLAZING

DIVISION 09 - FINISHES

09100N METAL SUPPORT ASSEMBLIES
09250 GYPSUM BOARD
09310 CERAMIC TILE, AND PAVER TILE
09510 ACOUSTICAL CEILINGS
09620A RESILIENT ATHLETIC FLOORING
09650 RESILIENT FLOORING
09670 FLUID-APPLIED FLOORING
09680 CARPET
09900 PAINTS AND COATINGS

DIVISION 10 - SPECIALTIES

10100A VISUAL COMMUNICATIONS SPECIALTIES
10153 TOILET PARTITIONS
10201N METAL WALL LOUVERS
10270A RAISED FLOOR SYSTEM
10440 INTERIOR SIGNAGE
10505N STEEL CLOTHING AND GEAR LOCKERS
10650A OPERABLE PARTITIONS
10716N STORM SHUTTERS
10800 TOILET ACCESSORIES

DIVISION 11 - EQUIPMENT

11400A FOOD SERVICE EQUIPMENT

DIVISION 12 - FURNISHINGS

12320A CABINETS AND COUNTERTOPS
12490A WINDOW TREATMENT
12600A THEATER CHAIRS

DIVISION 13 - SPECIAL CONSTRUCTION

13038 SAUNAS
13080 SEISMIC PROTECTION FOR MISCELLANEOUS EQUIPMENT
13100A LIGHTNING PROTECTION SYSTEM
13200 UNDERGROUND WATER TANKS
13280A ASBESTOS ABATEMENT
13851A FIRE DETECTION AND ALARM SYSTEM, ADDRESSABLE
13930A WET PIPE SPRINKLER SYSTEM, FIRE PROTECTION
13965A WET CHEMICAL FIRE EXTINGUISHING SYSTEM

DIVISION 15 - MECHANICAL

15070A SEISMIC PROTECTION FOR MECHANICAL EQUIPMENT
15080A THERMAL INSULATION FOR MECHANICAL SYSTEMS
15181A CHILLED AND CONDENSER WATER PIPING AND ACCESSORIES
15182 REFRIGERANT PIPING
15190A GAS PIPING SYSTEMS
15400A PLUMBING, GENERAL PURPOSE
15566A WARM AIR HEATING SYSTEMS
15569A WATER AND STEAM HEATING; OIL, GAS OR BOTH; UP TO 20 MBTUH
15620A LIQUID CHILLERS
15700A UNITARY HEATING AND COOLING EQUIPMENT
15895 AIR SUPPLY, DISTRIBUTION, VENTILATION, AND EXHAUST SYSTEM
15951A DIRECT DIGITAL CONTROL FOR HVAC
15990A TESTING, ADJUSTING, AND BALANCING OF HVAC SYSTEMS
15995A COMMISSIONING OF HVAC SYSTEMS

DIVISION 16 - ELECTRICAL

16070A SEISMIC PROTECTION FOR ELECTRICAL EQUIPMENT
16263A DIESEL-GENERATOR SET STATIONARY 100-2500 KW, WITH AUXILIARIES
16370A ELECTRICAL DISTRIBUTION SYSTEM, AERIAL
16375A ELECTRICAL DISTRIBUTION SYSTEM, UNDERGROUND
16410A AUTOMATIC TRANSFER SWITCH AND BY-PASS/ISOLATION SWITCH
16415A ELECTRICAL WORK, INTERIOR
16528A EXTERIOR LIGHTING INCLUDING SECURITY AND CCTV APPLICATIONS
16710A PREMISES DISTRIBUTION SYSTEM
16711A TELEPHONE SYSTEM, OUTSIDE PLANT
16815A CABLE TELEVISION PREMISES DISTRIBUTION SYSTEM
16900 MASS NOTIFICATION SYSTEM

-- End of Project Table of Contents --

SECTION TABLE OF CONTENTS

DIVISION 03 - CONCRETE

SECTION 03100A

STRUCTURAL CONCRETE FORMWORK

02/04

PART 1 GENERAL

1.1 REFERENCES
1.2 SUBMITTALS
1.3 DESIGN

PART 2 PRODUCTS

2.1 FORM MATERIALS
2.1.1 Forms For Class B Finish
2.1.2 Forms For Class C Finish
2.1.3 Forms For Class D Finish
2.1.4 Retain-In-Place Metal Forms
2.1.5 Form Ties
2.1.6 Form Releasing Agents

PART 3 EXECUTION

3.1 INSTALLATION
3.1.1 Formwork
3.2 CHAMFERING
3.3 COATING
3.4 REMOVAL OF FORMS

-- End of Section Table of Contents --

UFGS-03100A (February 2004)

SECTION 03100A

STRUCTURAL CONCRETE FORMWORK
02/04

PART 1 GENERAL

1.1 REFERENCES

The publications listed below form a part of this specification to the extent referenced. The publications are referred to within the text by the basic designation only.

ACI INTERNATIONAL (ACI)

ACI 347R (2001) Guide to Formwork for Concrete

AMERICAN HARDBOARD ASSOCIATION (AHA)

AHA A135.4 (1995) Basic Hardboard

U.S. DEPARTMENT OF COMMERCE (DOC)

PS1 (1995) Construction and Industrial Plywood (APA V995)

1.2 SUBMITTALS

Government approval is required for submittals with a "G" designation; submittals not having a "G" designation are for information only or as otherwise designated. When used, a designation following the "G" designation identifies the office that will review the submittal for the Government. The following shall be submitted in accordance with Section 01330 SUBMITTAL PROCEDURES:

SD-03 Product Data

Form Materials

Manufacturer's data including literature describing form materials, accessories, and form releasing agents.

Form Releasing Agents

Manufacturer's recommendation on method and rate of application of form releasing agents.

1.3 DESIGN

Formwork shall be designed in accordance with methodology of ACI 347R for anticipated loads, lateral pressures, and stresses. Forms shall be capable of producing a surface which meets the requirements of the class of finish specified in Section 03300A CAST-IN-PLACE STRUCTURAL CONCRETE. Forms shall be capable of withstanding the pressures resulting from placement and vibration of concrete.

PART 2 PRODUCTS

2.1 FORM MATERIALS

2.1.1 Forms For Class B Finish

Forms for Class B finished surfaces shall be plywood panels conforming to PS1, Grade B-B concrete form panels, Class I or II. Other form materials or liners may be used provided the smoothness and appearance of concrete produced will be equivalent to that produced by the plywood concrete form panels.

2.1.2 Forms For Class C Finish

Forms for Class C finished surfaces shall be shiplap lumber; plywood conforming to PS1, Grade B-B concrete form panels, Class I or II; tempered concrete form hardboard conforming to AHA A135.4; other approved concrete form material; or steel, except that steel lining on wood sheathing shall not be used.

2.1.3 Forms For Class D Finish

Forms for Class D finished surfaces, except where concrete is placed against earth, shall be wood or steel or other approved concrete form material.

2.1.4 Retain-In-Place Metal Forms

Retain-in-place metal forms for concrete slabs and roofs shall be as specified in Section 05310 STEEL DECKS.

2.1.5 Form Ties

Form ties shall be factory-fabricated metal ties, shall be of the removable or internal disconnecting or snap-off type, and shall be of a design that will not permit form deflection and will not spall concrete upon removal. Solid backing shall be provided for each tie. Except where removable tie rods are used, ties shall not leave holes in the concrete surface less than 1/4 inch nor more than 1 inch deep and not more than 1 inch in diameter. Removable tie rods shall be not more than 1-1/2 inches in diameter.

2.1.6 Form Releasing Agents

Form releasing agents shall be commercial formulations that will not bond with, stain or adversely affect concrete surfaces. Agents shall not impair subsequent treatment of concrete surfaces depending upon bond or adhesion nor impede the wetting of surfaces to be cured with water or curing compounds.

PART 3 EXECUTION

3.1 INSTALLATION

3.1.1 Formwork

Forms shall be mortar tight, properly aligned and adequately supported to produce concrete surfaces meeting the surface requirements specified in Section 03300A CAST-IN-PLACE STRUCTURAL CONCRETE and conforming to

construction tolerance given in TABLE 1. Where concrete surfaces are to have a Class B finish, joints in form panels shall be arranged as approved. Where forms for continuous surfaces are placed in successive units, the forms shall fit over the completed surface to obtain accurate alignment of the surface and to prevent leakage of mortar. Forms shall not be reused if there is any evidence of surface wear and tear or defects which would impair the quality of the surface. Surfaces of forms to be reused shall be cleaned of mortar from previous concreting and of all other foreign material before reuse. Form ties that are to be completely withdrawn shall be coated with a nonstaining bond breaker.

3.2 CHAMFERING

Except as otherwise shown, external corners that will be exposed shall be chamfered, beveled, or rounded by moldings placed in the forms.

3.3 COATING

Forms for Class B finished surfaces shall be coated with a form releasing agent before the form or reinforcement is placed in final position. The coating shall be used as recommended in the manufacturer's printed or written instructions. Forms for Class C and D finished surfaces may be wet with water in lieu of coating immediately before placing concrete, except that in cold weather with probable freezing temperatures, coating shall be mandatory. Surplus coating on form surfaces and coating on reinforcing steel and construction joints shall be removed before placing concrete.

3.4 REMOVAL OF FORMS

Forms shall be removed preventing injury to the concrete and ensuring the complete safety of the structure. Formwork for columns, sides of beams and lintels and other parts not supporting the weight of concrete may be removed when the concrete has attained sufficient strength to resist damage from the removal operation but not before at least 24 hours has elapsed since concrete placement. Supporting forms and shores shall not be removed from beams and lintels, until the structural units are strong enough to carry their own weight and any other construction or natural loads. Supporting forms or shores shall not be removed before the concrete strength has reached 70 percent of design strength, as determined by field cured cylinders or other approved methods. This strength shall be demonstrated by job-cured test specimens, and by a structural analysis considering the proposed loads in relation to these test strengths and the strength of forming and shoring system. The job-cured test specimens for form removal purposes shall be provided in numbers as directed and shall be in addition to those required for concrete quality control. The specimens shall be removed from molds at the age of 24 hours and shall receive, insofar as possible, the same curing and protection as the structures they represent.

TABLE 1

TOLERANCES FOR FORMED SURFACES

1. Variations from the plumb:	In any 10 feet of length ---------- 1/4 inch
a. In the lines and surfaces of columns, piers, walls and	Maximum for entire length ---------- 1 inch

TABLE 1

TOLERANCES FOR FORMED SURFACES

in arises	
b. For exposed corner columns,control-joint grooves, and other conspicuous lines	In any 20 feet of length ---------- ---- 1/4 inch Maximum for entire length---------- 1/2 inch
2. Variation from the level or from the grades indicated on the drawings:	In any 10 feet of length ----------1/4 inch In any bay or in any 20 feet of length---------- 3/8 inch
a. In slab soffits, ceilings, beam soffits, and in arises, measured before removal of supporting shores	Maximum for entire length ---------- 3/4 inch
b. In exposed lintels, sills, parapets, horizontal grooves, and other conspicuous lines	In any bay or in any 20 feet of length ---------- ----- 1/4 inch Maximum for entire length---------- 1/2 inch
3. Variation of the linear building lines from established position in plan	In any 20 feet --------- 1/2 inch Maximum ----------1 inch
4. Variation of distance between walls, columns, partitions	1/4 inch per 10 feet of distance, but not more than 1/2 inch in any one bay,and not more than 1 inch total variation
5. Variation in the sizes and locations of sleeves, floor openings, and wall opening	Minus ---------- 1/4 inch Plus ---------- 1/2 inch
6. Variation in cross-sectional dimensions of columns and beams and in the thickness of slabs and walls	Minus ---------- 1/4 inch Plus ---------- 1/2 inch
7. Footings:	
a. Variation of dimensions in plan	Minus ---------- 1/2 inch Plus ---------- 2 inches when formed or plus 3 inches when placed against unformed excavation
b. Misplacement of eccentricity	2 percent of the footing width in the direction of

TABLE 1

TOLERANCES FOR FORMED SURFACES

		misplacement but not more than 2 inches
c. Reduction in thickness of specified thickness	Minus	5 percent
8. Variation in steps:	Riser	1/8 inch
a. In a flight of stairs	Tread	1/4 inch
b. In consecutive steps	Riser	1/16 inch
	Tread	1/8 inch

-- End of Section --

SECTION TABLE OF CONTENTS

DIVISION 03 - CONCRETE

SECTION 03150A

EXPANSION JOINTS, AND CONTRACTION JOINTS

09/03

PART 1 GENERAL

1.1 REFERENCES
1.2 SUBMITTALS
1.3 DELIVERY AND STORAGE

PART 2 PRODUCTS

2.1 CONTRACTION JOINT STRIPS
2.2 PREFORMED EXPANSION JOINT FILLER
2.3 SEALANT
2.3.1 Preformed Polychloroprene Elastomeric Type
2.3.2 Lubricant for Preformed Compression Seals
2.3.3 Field-Molded Type
2.3.4 Hot-Applied Jet-Fuel Resistant Type

PART 3 EXECUTION

3.1 JOINTS
3.1.1 Contraction Joints
3.1.1.1 Sawed Joints
3.1.2 Expansion Joints
3.1.3 Joint Sealant
3.1.3.1 Joints With Preformed Compression Seals
3.1.3.2 Joints With Field-Molded Sealant
3.2 CONSTRUCTION JOINTS

-- End of Section Table of Contents --

UFGS-03150A (September 2003)

SECTION 03150A

EXPANSION JOINTS, AND CONTRACTION JOINTS
09/03

PART 1 GENERAL

1.1 REFERENCES

The publications listed below form a part of this specification to the extent referenced. The publications are referred to within the text by the basic designation only.

AMERICAN HARDBOARD ASSOCIATION (AHA)

AHA A135.4	(1995) Basic Hardboard

ASTM INTERNATIONAL (ASTM)

ASTM C 919	(2002) Use of Sealants in Acoustical Applications
ASTM C 920	(2002) Elastomeric Joint Sealants
ASTM D 1751	(1999) Preformed Expansion Joint Filler for Concrete Paving and Structural Construction (Nonextruding and Resilient Bituminous Types)
ASTM D 1752	(1984; R 1996e1) Preformed Sponge Rubber and Cork Expansion Joint Fillers for Concrete Paving and Structural Construction
ASTM D 1854	(2002) Jet-Fuel-Resistant Concrete Joint Sealer, Hot-Applied Elastic Type
ASTM D 2628	(1991; R 1998) Preformed Polychloroprene Elastomeric Joint Seals for Concrete Pavements
ASTM D 2835	(1989; R 1998) Lubricant for Installation of Preformed Compression Seals in Concrete Pavements
ASTM D 5249	(1995; R 2000) Backer Material for Use with Cold-and Hot-Applied Joint Sealants in Portland-Cement Concrete and Asphalt Joints
ASTM D 5329	(1996) Sealants and Fillers, Hot-Applied, for Joints and Cracks in Asphaltic and Portland Cement Concrete Pavements

1.2 SUBMITTALS

Government approval is required for submittals with a "G" designation; submittals not having a "G" designation are for information only or as otherwise designated. When used, a designation following the "G" designation identifies the office that will review the submittal for the Government. The following shall be submitted in accordance with Section 01330 SUBMITTAL PROCEDURES:

SD-03 Product Data

Preformed Expansion Joint Filler
Sealant

Manufacturer's literature, including safety data sheets, for preformed fillers and the lubricants used in their installation; field-molded sealants and primers (when required by sealant manufacturer); preformed compression seals. Manufacturer's recommended instructions for installing preformed fillers, field-molded sealants; preformed compression seals.

SD-04 Samples

Lubricant for Preformed Compression Seals

Specimens identified to indicate the manufacturer, type of material, size and quantity of material, and shipment or lot represented. Each sample shall be a piece not less than 9 ft of 1 inch nominal width or wider seal or a piece not less than 12 ft of compression seal less than 1 inch nominal width. One quart of lubricant shall be provided.

Field-Molded Type

One gallon of field-molded sealant and one quart of primer (when primer is recommended by the sealant manufacturer) identified to indicate manufacturer, type of material, quantity, and shipment or lot represented.

SD-07 Certificates

Preformed Expansion Joint Filler
Sealant

Certificates of compliance stating that the joint filler and sealant materials conform to the requirements specified.

1.3 DELIVERY AND STORAGE

Material delivered and placed in storage shall be stored off the ground and protected from moisture, dirt, and other contaminants. Sealants shall be delivered in the manufacturer's original unopened containers. Sealants whose shelf life has expired shall be removed from the site.

PART 2 PRODUCTS

2.1 CONTRACTION JOINT STRIPS

Contraction joint strips shall be 1/8 inch thick tempered hardboard

conforming to AHA A135.4, Class 1. In lieu of hardboard strips, rigid polyvinylchloride (PVC) or high impact polystyrene (HIPS) insert strips specifically designed to induce controlled cracking in slabs on grade may be used. Such insert strips shall have removable top section.

2.2 PREFORMED EXPANSION JOINT FILLER

Expansion joint filler shall be preformed material conforming to ASTM D 1751 or ASTM D 1752. Unless otherwise indicated, filler material shall be 3/8 inch thick and of a width applicable for the joint formed. Backer material, when required, shall conform to ASTM D 5249.

2.3 SEALANT

Joint sealant shall conform to the following:

2.3.1 Preformed Polychloroprene Elastomeric Type

ASTM D 2628.

2.3.2 Lubricant for Preformed Compression Seals

ASTM D 2835.

2.3.3 Field-Molded Type

ASTM C 920, Type M, Grade P or NS, Class 25, Use T for horizontal joints. Type M, Grade NS, Class 25, Use NT for vertical joints. Bond breaker material shall be polyethylene tape, coated paper, metal foil or similar type materials. The back-up material shall be compressible, non-shrink, nonreactive with sealant, and non-absorptive material type such as extruded butyl or polychloroprene rubber.

2.3.4 Hot-Applied Jet-Fuel Resistant Type

ASTM D 1854 tested in accordance with ASTM D 5329.

PART 3 EXECUTION

3.1 JOINTS

Joints shall be installed at locations indicated and as authorized.

3.1.1 Contraction Joints

Contraction joints may be constructed by cutting the concrete with a saw after concrete has set. Joints shall be approximately 1/8 inch wide and shall extend into the slab one-fourth the slab thickness, minimum, but not less than 1 inch.

3.1.1.1 Sawed Joints

Joint sawing shall be early enough to prevent uncontrolled cracking in the slab, and late enough that this can be accomplished without appreciable spalling; but in no case later than 8 hours after concrete has been placed. Concrete sawing machines shall be adequate in number and power, and with sufficient replacement blades to complete the sawing at the required rate. Joints shall be cut to true alignment and shall be cut in sequence of concrete placement. Sludge and cutting debris shall be removed.

3.1.2 Expansion Joints

Preformed expansion joint filler shall be used in expansion and isolation joints in slabs around columns and between slabs on grade and vertical surfaces where indicated. The filler shall extend the full slab depth, unless otherwise indicated. The edges of the joint shall be neatly finished with an edging tool of 1/8 inch radius, except where a resilient floor surface will be applied. Where the joint is to receive a sealant, the filler strips shall be installed at the proper level below the finished floor with a slightly tapered, dressed and oiled wood strip temporarily secured to the top to form a recess to the size shown on the drawings. The wood strip shall be removed after the concrete has set. Contractor may opt to use a removable expansion filler cap designed and fabricated for this purpose in lieu of the wood strip. The groove shall be thoroughly cleaned of laitance, curing compound, foreign materials, protrusions of hardened concrete, and any dust which shall be blown out of the groove with oil-free compressed air.

3.1.3 Joint Sealant

Sawed contraction joints and expansion joints in slabs shall be filled with joint sealant, unless otherwise shown. Joint surfaces shall be clean, dry, and free of oil or other foreign material which would adversely affect the bond between sealant and concrete. Joint sealant shall be applied as recommended by the manufacturer of the sealant.

3.1.3.1 Joints With Preformed Compression Seals

Compression seals shall be installed with equipment capable of installing joint seals to the prescribed depth without cutting, nicking, twisting, or otherwise distorting or damaging the seal or concrete and with no more than 5 percent stretching of the seal. The sides of the joint and, if necessary, the sides of the compression seal shall be covered with a coating of lubricant. Butt joints shall be coated with liberal applications of lubricant.

3.1.3.2 Joints With Field-Molded Sealant

Joints shall not be sealed when the sealant material, ambient air, or concrete temperature is less than 40 degrees F. When the sealants are meant to reduce the sound transmission characteristics of interior walls, ceilings, and floors the guidance provided in ASTM C 919 shall be followed. Joints requiring a bond breaker shall be coated with curing compound or with bituminous paint. Bond breaker and back-up material shall be installed where required. Joints shall be primed and filled flush with joint sealant in accordance with the manufacturer's recommendations.

3.2 CONSTRUCTION JOINTS

Construction joints are specified in Section 03300A CAST-IN-PLACE STRUCTURAL CONCRETE except that construction joints coinciding with expansion and contraction joints shall be treated as expansion or contraction joints as applicable.

-- End of Section --

SECTION TABLE OF CONTENTS

DIVISION 03 - CONCRETE

SECTION 03200A

CONCRETE REINFORCEMENT

02/04

PART 1 GENERAL

1.1 REFERENCES
1.2 SUBMITTALS
1.3 DELIVERY AND STORAGE

PART 2 PRODUCTS

2.1 DOWELS
2.2 REINFORCING STEEL
2.3 WELDED WIRE FABRIC
2.4 WIRE TIES
2.5 SUPPORTS
2.6 SYNTHETIC FIBER REINFORCEMENT

PART 3 EXECUTION

3.1 REINFORCEMENT
3.1.1 Placement
3.1.2 Splicing
3.2 WELDED-WIRE FABRIC PLACEMENT
3.3 DOWEL INSTALLATION
3.4 SYNTHETIC FIBER REINFORCED CONCRETE
3.5 SPECIAL INSPECTION AND TESTING FOR SEISMIC-RESISTING SYSTEMS

-- End of Section Table of Contents --

UFGS-03200A (February 2004)

SECTION 03200A

CONCRETE REINFORCEMENT
02/04

PART 1 GENERAL

1.1 REFERENCES

The publications listed below form a part of this specification to the extent referenced. The publications are referred to within the text by the basic designation only.

ACI INTERNATIONAL (ACI)

ACI 318/318R	(2002) Building Code Requirements for Structural Concrete and Commentary

ASTM INTERNATIONAL (ASTM)

ASTM A 185	(2002) Steel Welded Wire Reinforcement, Plain, for Concrete
ASTM A 53	(1999b) Pipe, Steel, Black and Hot-Dipped, Zinc-Coated, Welded and Seamless **
ASTM A 615/A 615M	(2003a) Deformed and Plain Billet-Steel Bars for Concrete Reinforcement
ASTM A 675/A 675M	(1990a; R 2000) Steel Bars, Carbon, Hot-Wrought, Special Quality, Mechanical Properties
ASTM C 1116	(2003) Fiber-Reinforced Concrete and Shotcrete

CONCRETE REINFORCING STEEL INSTITUTE (CRSI)

CRSI 1MSP	(2001) Manual of Standard Practice

1.2 SUBMITTALS

Government approval is required for submittals with a "G" designation; submittals not having a "G" designation are for information only or as otherwise designated. When used, a designation following the "G" designation identifies the office that will review the submittal for the Government. The following shall be submitted in accordance with Section 01330 SUBMITTAL PROCEDURES:

SD-02 Shop Drawings

Reinforcement; G

Detail drawings showing reinforcing steel placement, schedules, sizes, grades, and splicing and bending details. Drawings shall

show support details including types, sizes and spacing.

SD-07 Certificates

Reinforcing Steel

Certified copies of mill reports attesting that the reinforcing steel furnished contains no less than 25 percent recycled scrap steel and meets the requirements specified herein, prior to the installation of reinforcing steel.

1.3 DELIVERY AND STORAGE

Reinforcement and accessories shall be stored off the ground on platforms, skids, or other supports.

PART 2 PRODUCTS

2.1 DOWELS

Dowels shall conform to ASTM A 675/A 675M, Grade 80. Steel pipe conforming to ASTM A 53, Schedule 80, may be used as dowels provided the ends are closed with metal or plastic inserts or with mortar.

2.2 REINFORCING STEEL

Reinforcing steel shall be deformed bars conforming to ASTM A 615/A 615M , grades and sizes as indicated.

2.3 WELDED WIRE FABRIC

Welded wire fabric shall conform to ASTM A 185.

2.4 WIRE TIES

Wire ties shall be 16 gauge or heavier black annealed steel wire.

2.5 SUPPORTS

Bar supports for formed surfaces shall be designed and fabricated in accordance with CRSI 1MSP and shall be steel or precast concrete blocks. Precast concrete blocks shall have wire ties and shall be not less than 4 inches square when supporting reinforcement on ground. Precast concrete block shall have compressive strength equal to that of the surrounding concrete. Where concrete formed surfaces will be exposed to weather or where surfaces are to be painted, steel supports within 1/2 inch of concrete surface shall be galvanized, plastic protected or of stainless steel. Concrete supports used in concrete exposed to view shall have the same color and texture as the finish surface. For slabs on grade, supports shall be precast concrete blocks, plastic coated steel fabricated with bearing plates, or specifically designed wire-fabric supports fabricated of plastic.

2.6 SYNTHETIC FIBER REINFORCEMENT

Synthetic fiber shall be polypropylene with a denier less than 100 and a nominal fiber length of 2 inches.

PART 3 EXECUTION

3.1 REINFORCEMENT

Reinforcement shall be fabricated to shapes and dimensions shown and shall conform to the requirements of ACI 318/318R. Reinforcement shall be cold bent unless otherwise authorized. Bending may be accomplished in the field or at the mill. Bars shall not be bent after embedment in concrete. Safety caps shall be placed on all exposed ends of vertical concrete reinforcement bars that pose a danger to life safety. Wire tie ends shall face away from the forms.

3.1.1 Placement

Reinforcement shall be free from loose rust and scale, dirt, oil, or other deleterious coating that could reduce bond with the concrete. Reinforcement shall be placed in accordance with ACI 318/318R at locations shown plus or minus one bar diameter. Reinforcement shall not be continuous through expansion joints and shall be as indicated through construction or contraction joints. Concrete coverage shall be as indicated or as required by ACI 318/318R. If bars are moved more than one bar diameter to avoid interference with other reinforcement, conduits or embedded items, the resulting arrangement of bars, including additional bars required to meet structural requirements, shall be approved before concrete is placed.

3.1.2 Splicing

Splices of reinforcement shall conform to ACI 318/318R and shall be made only as required or indicated. Splicing shall be by lapping. Lapped bars shall be placed in contact and securely tied or spaced transversely apart to permit the embedment of the entire surface of each bar in concrete. Lapped bars shall not be spaced farther apart than one-fifth the required length of lap or 6 inches.

3.2 WELDED-WIRE FABRIC PLACEMENT

Welded-wire fabric shall be placed in slabs as indicated. Fabric placed in slabs on grade shall be continuous between expansion, construction, and contraction joints. Fabric placement at joints shall be as indicated. Lap splices shall be made in such a way that the overlapped area equals the distance between the outermost crosswires plus 2 inches. Laps shall be staggered to avoid continuous laps in either direction. Fabric shall be wired or clipped together at laps at intervals not to exceed 4 feet. Fabric shall be positioned by the use of supports.

3.3 DOWEL INSTALLATION

Dowels shall be installed in slabs on grade at locations indicated and at right angles to joint being doweled. Dowels shall be accurately positioned and aligned parallel to the finished concrete surface before concrete placement. Dowels shall be rigidly supported during concrete placement. One end of dowels shall be coated with a bond breaker.

3.4 SYNTHETIC FIBER REINFORCED CONCRETE

Fiber reinforcement shall be added to the concrete mix in accordance with the applicable sections of ASTM C 1116 and the recommendations of the manufacturer, and in an amount of 0.1 percent by volume.

3.5 SPECIAL INSPECTION AND TESTING FOR SEISMIC-RESISTING SYSTEMS

Special inspections and testing for seismic-resisting systems and components shall be done in accordance with Section 01452A SPECIAL INSPECTION FOR SEISMIC-RESISTING SYSTEMS.

-- End of Section --

SECTION TABLE OF CONTENTS

DIVISION 03 - CONCRETE

SECTION 03300A

CAST-IN-PLACE STRUCTURAL CONCRETE

11/01

PART 1 GENERAL

1.1 REFERENCES
1.2 LUMP SUM CONTRACT
1.3 SUBMITTALS
1.4 QUALIFICATIONS
1.5 GENERAL REQUIREMENTS
1.5.1 Tolerances
1.5.1.1 Floors
1.5.1.2 Floors by the F-Number System
1.5.2 Strength Requirements and w/c Ratio
1.5.2.1 Strength Requirements
1.5.2.2 Water-Cement Ratio
1.5.3 Air Entrainment
1.5.4 Slump
1.5.5 Concrete Temperature
1.5.6 Size of Coarse Aggregate
1.5.7 Special Properties and Products
1.5.7.1 Reflectivity of Concrete
1.6 MIXTURE PROPORTIONS
1.6.1 Proportioning Studies
1.6.2 Average Compressive Strength Required for Mixtures
1.6.2.1 Computations from Test Records
1.6.2.2 Computations without Previous Test Records
1.7 STORAGE OF MATERIALS
1.8 GOVERNMENT ASSURANCE INSPECTION AND TESTING
1.8.1 Materials
1.8.2 Fresh Concrete
1.8.3 Hardened Concrete
1.8.4 Inspection

PART 2 PRODUCTS

2.1 CEMENTITIOUS MATERIALS
2.1.1 Portland Cement
2.1.2 Pozzolan (Fly Ash)
2.1.3 Ground Granulated Blast-Furnace (GGBF) Slag
2.2 AGGREGATES
2.2.1 Fine Aggregate
2.2.2 Coarse Aggregate
2.3 CHEMICAL ADMIXTURES
2.3.1 Air-Entraining Admixture
2.3.2 Accelerating Admixture
2.3.3 Water-Reducing or Retarding Admixture
2.3.4 High-Range Water Reducer
2.3.5 Expanding Admixture
2.3.6 Other Chemical Admixtures
2.4 CURING MATERIALS

2.4.1 Impervious-Sheet
2.4.2 Membrane-Forming Compound
2.4.3 Burlap and Cotton Mat
2.5 WATER
2.6 NONSHRINK GROUT
2.7 LATEX BONDING AGENT
2.8 EPOXY RESIN
2.9 EMBEDDED ITEMS
2.10 FLOOR HARDENER
2.11 PERIMETER INSULATION
2.12 VAPOR BARRIER
2.13 JOINT MATERIALS
2.13.1 Joint Fillers, Sealers
2.13.2 Contraction Joints in Slabs
2.14 SYNTHETIC FIBERS FOR REINFORCING

PART 3 EXECUTION

3.1 PREPARATION FOR PLACING
3.1.1 Foundations
3.1.1.1 Concrete on Earth Foundations
3.1.1.2 Excavated Surfaces in Lieu of Forms
3.1.2 Preparation of Previously Placed Concrete
3.1.3 Vapor Barrier
3.1.4 Perimeter Insulation
3.1.5 Embedded Items
3.2 CONCRETE PRODUCTION
3.2.1 Batching, Mixing, and Transporting Concrete
3.2.1.1 General
3.2.1.2 Batching Equipment
3.2.1.3 Scales
3.2.1.4 Batching Tolerances
3.2.1.5 Moisture Control
3.2.1.6 Concrete Mixers
3.2.1.7 Stationary Mixers
3.2.1.8 Truck Mixers
3.3 FIBER REINFORCED CONCRETE
3.4 TRANSPORTING CONCRETE TO PROJECT SITE
3.5 CONVEYING CONCRETE ON SITE
3.5.1 Buckets
3.5.2 Trucks
3.5.3 Chutes
3.5.4 Concrete Pumps
3.6 PLACING CONCRETE
3.6.1 Depositing Concrete
3.6.2 Consolidation
3.6.3 Cold Weather Requirements
3.6.4 Hot Weather Requirements
3.6.5 Prevention of Plastic Shrinkage Cracking
3.6.6 Placing Concrete in Congested Areas
3.6.7 Placing Flowable Concrete
3.7 JOINTS
3.7.1 Construction Joints
3.7.2 Contraction Joints in Slabs on Grade
3.7.3 Expansion Joints
3.7.4 Dowels and Tie Bars
3.8 FINISHING FORMED SURFACES
3.8.1 Class B Finish
3.8.2 Class C Finish

3.9 REPAIRS
3.9.1 Damp-Pack Mortar Repair
3.9.2 Repair of Major Defects
3.9.2.1 Surface Application of Mortar Repair
3.9.2.2 Repair of Deep and Large Defects
3.10 FINISHING UNFORMED SURFACES
3.10.1 General
3.10.2 Rough Slab Finish
3.10.3 Floated Finish
3.10.4 Troweled Finish
3.10.5 Non-Slip Finish
3.10.5.1 Broomed
3.11 FLOOR HARDENER
3.12 CURING AND PROTECTION
3.12.1 General
3.12.2 Moist Curing
3.12.3 Membrane Forming Curing Compounds
3.12.4 Cold Weather Curing and Protection
3.13 SETTING BASE PLATES AND BEARING PLATES
3.13.1 Nonshrink Grout
3.13.1.1 Mixing and Placing of Nonshrink Grout
3.13.1.2 Treatment of Exposed Surfaces
3.14 TESTING AND INSPECTION FOR CONTRACTOR QUALITY CONTROL
3.14.1 Grading and Corrective Action
3.14.1.1 Fine Aggregate
3.14.1.2 Coarse Aggregate
3.14.2 Quality of Aggregates
3.14.3 Scales, Batching and Recording
3.14.4 Batch-Plant Control
3.14.5 Concrete Mixture
3.14.6 Inspection Before Placing
3.14.7 Placing
3.14.8 Vibrators
3.14.9 Curing Inspection
3.14.10 Cold-Weather Protection
3.14.11 Mixer Uniformity
3.14.12 Reports

-- End of Section Table of Contents --

UFGS-03300A (November 2001)

SECTION 03300A

CAST-IN-PLACE STRUCTURAL CONCRETE
11/01

PART 1 GENERAL

1.1 REFERENCES

The publications listed below form a part of this specification to the extent referenced. The publications are referred to in the text by basic designation only.

ACI INTERNATIONAL (ACI)

ACI 117	(1990) Standard Tolerances for Concrete Construction and Materials & Commentary
ACI 211.1	(1991) Standard Practice for Selecting Proportions for Normal, Heavyweight, and Mass Concrete
ACI 214.3R	(1988; R 1997) Simplified Version of the Recommended Practice for Evaluation of Strength Test Results of Concrete
ACI 305R	(1999) Hot Weather Concreting
ACI 306R	(1988) Cold Weather Concreting
ACI 318/318R	(2002) Building Code Requirements for Structural Concrete and Commentary

AMERICAN ASSOCIATION OF STATE HIGHWAY AND TRANSPORTATION OFFICIALS (AASHTO)

AASHTO M 182	(1991; R 2000) Burlap Cloth Made from Jute or Kenaf

ASTM INTERNATIONAL (ASTM)

ASTM C 1017/C 1017M	(1998) Chemical Admixtures for Use in Producing Flowing Concrete
ASTM C 1059	(1999) Latex Agents for Bonding Fresh to Hardened Concrete
ASTM C 1064/C 1064M	(20031) Temperature of Freshly Mixed Portland Cement Concrete
ASTM C 1077	(2003) Laboratories Testing Concrete and Concrete Aggregates for Use in Construction and Criteria for Laboratory Evaluation

ASTM C 1107	(2002) Packaged Dry, Hydraulic-Cement Grout(Nonshrink)
ASTM C 1116	(2003) Fiber-Reinforced Concrete and Shotcrete
ASTM C 136	(2001) Sieve Analysis of Fine and Coarse Aggregates
ASTM C 143/C 143M	(2003) Slump of Hydraulic Cement Concrete
ASTM C 150	(2002ae1) Portland Cement
ASTM C 171	(2003) Sheet Materials for Curing Concrete
ASTM C 172	(1999) Sampling Freshly Mixed Concrete
ASTM C 192/C 192M	(2002) Making and Curing Concrete Test Specimens in the Laboratory
ASTM C 231	(2003) Air Content of Freshly Mixed Concrete by the Pressure Method
ASTM C 260	(2001) Air-Entraining Admixtures for Concrete
ASTM C 309	(2003) Liquid Membrane-Forming Compounds for Curing Concrete
ASTM C 31/C 31M	(2003a) Making and Curing Concrete Test Specimens in the Field
ASTM C 33	(2003) Concrete Aggregates
ASTM C 39/C 39M	(2003) Compressive Strength of Cylindrical Concrete Specimens
ASTM C 42/C 42M	(2003) Obtaining and Testing Drilled Cores and Sawed Beams of Concrete
ASTM C 494/C 494M	(1999ae1) Chemical Admixtures for Concrete
ASTM C 552	(2000e1) Cellular Glass Thermal Insulation
ASTM C 578	(2003a) Rigid, Cellular Polystyrene Thermal Insulation
ASTM C 591	(2001) Unfaced Preformed Rigid Cellular Polyisocyanurate Thermal Insulation
ASTM C 618	(2003) Coal Fly Ash and Raw or Calcined Natural Pozzolan for Use as a Mineral Admixture in Concrete
ASTM C 78	(2002) Flexural Strength of Concrete (Using Simple Beam With Third-Point Loading)
ASTM C 881	(1999) Epoxy-Resin-Base Bonding Systems

	for Concrete **
ASTM C 937	(1997) Grout Fluidifier for Preplaced-Aggregate Concrete
ASTM C 94/C 94M	(2003a) Ready-Mixed Concrete
ASTM C 940	(1998a) Expansion and Bleeding of Freshly Mixed Grouts for Preplaced-Aggregate Concrete in the Laboratory
ASTM C 989	(1999) Ground Granulated Blast-Furnace Slag for Use in Concrete and Mortars
ASTM D 1752	(1984; R 1996e1) Preformed Sponge Rubber and Cork Expansion Joint Fillers for Concrete Paving and Structural Construction
ASTM D 75	(2003) Sampling Aggregates
ASTM E 1155	(1996; R 2001) Determining Floor Flatness and Floor Levelness Numbers
ASTM E 96	(2000e1) Water Vapor Transmission of Materials

NATIONAL INSTITUTE OF STANDARDS AND TECHNOLOGY (NIST)

NIST HB 44	(2003) NIST Handbook 44: Specifications, Tolerances, and other Technical Requirements for Weighing and Measuring Devices

NATIONAL READY MIXED CONCRETE ASSOCIATION (NRMCA)

NRMCA CPMB 100	(2000) Concrete Plant Standards
NRMCA QC 3	(2002) Quality Control Manual: Section 3, Plant Certifications Checklist: Certification of Ready Mixed Concrete Production Facilities
NRMCA TMMB 100	(2001) Truck Mixer, Agitator and Front Discharge Concrete Carrier Standards

U.S. ARMY CORPS OF ENGINEERS (USACE)

COE CRD-C 104	(1980) Method of Calculation of the Fineness Modulus of Aggregate
COE CRD-C 400	(1963) Requirements for Water for Use in Mixing or Curing Concrete
COE CRD-C 521	(1981) Standard Test Method for Frequency and Amplitude of Vibrators for Concrete
COE CRD-C 540	(2001) Standard Specification for Nonbituminous Inserts for Contraction Joints in Portland Cement Concrete

	Airfield Pavements, Sawable Type
COE CRD-C 572	(1974) Specifications for Polyvinylchloride Waterstops

1.2 LUMP SUM CONTRACT

Under this type of contract concrete items will be paid for by lump sum and will not be measured. The work covered by these items consists of furnishing all concrete materials, reinforcement, miscellaneous embedded materials, and equipment, and performing all labor for the forming, manufacture, transporting, placing, finishing, curing, and protection of concrete in these structures.

1.3 SUBMITTALS

Government approval is required for submittals with a "G" designation; submittals not having a "G" designation are for information only. When used, a designation following the "G" designation identifies the office that will review the submittal for the Government. The following shall be submitted in accordance with Section 01330 SUBMITTAL PROCEDURES:

SD-03 Product Data

Mixture Proportions; G

The results of trial mixture design studies along with a statement giving the maximum nominal coarse aggregate size and the proportions of ingredients that will be used in the manufacture of each strength or class of concrete, at least 14 days prior to commencing concrete placing operations. Aggregate weights shall be based on the saturated surface dry condition. The statement shall be accompanied by test results from an approved independent commercial testing laboratory, showing that mixture design studies have been made with materials proposed for the project and that the proportions selected will produce concrete of the qualities indicated. No substitutions shall be made in the materials used in the mixture design studies without additional tests to show that the quality of the concrete is satisfactory.

SD-06 Test Reports

Testing and Inspection for Contractor Quality Control

Certified copies of laboratory test reports, including mill tests and all other test data, for portland cement, pozzolan, ground granulated blast furnace slag, aggregate, admixtures, and curing compound proposed for use on this project.

SD-07 Certificates

Qualifications

Written documentation for Contractor Quality Control personnel.

SD-07 Certificates

Recycled Content

Certification and calculations attesting to the actual content of recycled material utilized in the manufacture of the concrete used in the Project

1.4 QUALIFICATIONS

Contractor Quality Control personnel assigned to concrete construction shall be American Concrete Institute (ACI) Certified Workmen in one of the following grades or shall have written evidence of having completed similar qualification programs:

Concrete Field Testing Technician, Grade I
Concrete Laboratory Testing Technician, Grade I or II
Concrete Construction Inspector, Level II

Concrete Transportation Construction Inspector or
Reinforced Concrete Special Inspector, Jointly certified by American Concrete Institute (ACI), Building Official and Code Administrators International (BOCA), International Conference of Building Officials (ICBO), and Southern Building Code Congress International (SBCCI).

The foreman or lead journeyman of the flatwork finishing crew shall have similar qualification for ACI Concrete Flatwork Technician/Finisher or equal, with written documentation.

1.5 GENERAL REQUIREMENTS

1.5.1 Tolerances

Except as otherwise specified herein, tolerances for concrete batching, mixture properties, and construction as well as definition of terms and application practices shall be in accordance with ACI 117. Level and grade tolerance measurements of slabs shall be made as soon as possible after finishing; when forms or shoring are used, the measurements shall be made prior to removal.

1.5.1.1 Floors

For the purpose of this Section the following terminology correlation between ACI 117 and this Section shall apply:

Floor Profile Quality Classification From ACI 117	This Section
Conventional Bullfloated	Same
Conventional Straightedged	Same
Flat	Float Finish or Trowel Finish
Very Flat	Same. Use only with F-system

Levelness tolerance shall not apply where design requires floors to be sloped to drains or sloped for other reasons.

1.5.1.2 Floors by the F-Number System

The flatness and levelness of floors shall be carefully controlled and the tolerances shall be measured by the F-Number system of Paragraph 4.5.6 and 4.5.6.1 of ACI 117. The Contractor shall furnish an approved floor

profilograph or other equipment capable of measuring the floor flatness (FF) number and the floor levelness (FL) number in accordance with ASTM E 1155. The Contractor shall perform the tolerance measurements within 72 hours after floor slab construction while being observed by the Contracting Officer. The tolerances of surfaces beyond the limits of ASTM E 1155 (the areas within 24 inches of embedments and construction joints) shall be acceptable to the Contracting Officer. Tolerances of the following areas shall meet the requirements for the listed surfaces as specified in paragraphs 4.5.6 and 4.5.6.1 of ACI 117.

Bullfloated-	Areas recessed for mortar setting beds.
Float Finish-	Areas not otherwise noted.
Trowel Finish-	Areas exposed to view in completed structure

1.5.2 Strength Requirements and w/c Ratio

1.5.2.1 Strength Requirements

Specified compressive strength (f'c) shall be as follows:

COMPRESSIVE STRENGTH	STRUCTURE OR PORTION OF STRUCTURE
4000 psi at 28 days	slabs subject to vehicle traffic, exterior walks and pavements
3000 psi at 28 days	all concrete not otherwise noted.

Compressive strength shall be determined in accordance with ASTM C 39/C 39M.

a. Evaluation of Concrete Compressive Strength. Compressive strength specimens (6 by 12 inch cylinders) shall be fabricated by the Contractor and laboratory cured in accordance with ASTM C 31/C 31M and tested in accordance with ASTM C 39/C 39M. The strength of the concrete will be considered satisfactory so long as the average of all sets of three consecutive test results equals or exceeds the specified compressive strength f'c and no individual test result falls below the specified strength f'c by more than 500 psi. A "test" is defined as the average of two companion cylinders, or if only one cylinder is tested, the results of the single cylinder test. Additional analysis or testing, including taking cores and/or load tests may be required at the Contractor's expense when the strength of the concrete in the structure is considered potentially deficient.

b. Investigation of Low-Strength Compressive Test Results. When any strength test of standard-cured test cylinders falls below the specified strength requirement by more than 500 psi or if tests of field-cured cylinders indicate deficiencies in protection and curing, steps shall be taken to assure that the load-carrying capacity of the structure is not jeopardized. When the strength of concrete in place is considered potentially deficient, cores shall be obtained and tested in accordance with ASTM C 42/C 42M. At least three representative cores shall be taken from each member or area of concrete in place that is considered potentially deficient. The location of cores will be determined by the Contracting Officer to least impair the strength of the structure. Concrete in the area represented by the core testing will be considered adequate if the average strength of the cores is equal

to at least 85 percent of the specified strength requirement and if no single core is less than 75 percent of the specified strength requirement. Non-destructive tests (tests other than test cylinders or cores) shall not be used as a basis for acceptance or rejection. The Contractor shall perform the coring and repair the holes. Cores will be tested by the Government.

c. Load Tests. If the core tests are inconclusive or impractical to obtain or if structural analysis does not confirm the safety of the structure, load tests may be directed by the Contracting Officer in accordance with the requirements of ACI 318/318R. Concrete work evaluated by structural analysis or by results of a load test as being understrength shall be corrected in a manner satisfactory to the Contracting Officer. All investigations, testing, load tests, and correction of deficiencies shall be performed by and at the expense of the Contractor and must be approved by the Contracting Officer, except that if all concrete is found to be in compliance with the drawings and specifications, the cost of investigations, testing, and load tests will be at the expense of the Government.

1.5.2.2 Water-Cement Ratio

Maximum water-cement ratio (w/c) for concrete shall be as follows:

WATER-CEMENT RATIO, BY WEIGHT	STRUCTURE OR PORTION OF STRUCTURE
0.40	- slabs on grade subject to vehicle traffic
0.45	- all other slabs on grade
0.50	- all other concrete

These w/c's may cause higher strengths than that required above for compressive strength. The maximum w/c required will be the equivalent w/c as determined by conversion from the weight ratio of water to cement plus pozzolan, and ground granulated blast furnace slag (GGBF slag) by the weight equivalency method as described in ACI 211.1. In the case where GGBF slag is used, the weight of the GGBF slag shall be included in the equations of ACI 211.1 for the term P which is used to denote the weight of pozzolan.

1.5.3 Air Entrainment

All concrete shall be air entrained to contain between 4 and 7 percent total air, except that when the nominal maximum size coarse aggregate is 3/4 inch or smaller it shall be between 4.5 and 7.5 percent. Specified air content shall be attained at point of placement into the forms. Air content shall be determined in accordance with ASTM C 231.

1.5.4 Slump

Slump of the concrete, as delivered to the point of placement into the forms, shall be within the following limits. Slump shall be determined in accordance with ASTM C 143/C 143M.

Structural Element	Slump Minimum	Slump Maximum
Columns and beams	2 in.	4 in.

Structural Element	Slump Minimum	Slump Maximum
Footings, slabs	1 in.	3 in.
Any structural concrete approved for placement by pumping:		
At pump	2 in.	6 in.
At discharge of line	1 in.	4 in.

When use of a plasticizing admixture conforming to ASTM C 1017/C 1017M or when a Type F or G high range water reducing admixture conforming to ASTM C 494/C 494M is permitted to increase the slump of concrete, concrete shall have a slump of 2 to 4 inches before the admixture is added and a maximum slump of 8 inches at the point of delivery after the admixture is added.

1.5.5 Concrete Temperature

The temperature of the concrete as delivered shall not exceed 90 degrees F. When the ambient temperature during placing is 40 degrees F or less, or is expected to be at any time within 6 hours after placing, the temperature of the concrete as delivered shall be between 55 and 75 degrees F.

1.5.6 Size of Coarse Aggregate

The largest feasible nominal maximum size aggregate (NMSA) specified in paragraph AGGREGATES shall be used in each placement. However, nominal maximum size of aggregate shall not exceed any of the following: three-fourths of the minimum cover for reinforcing bars, three-fourths of the minimum clear spacing between reinforcing bars, one-fifth of the narrowest dimension between sides of forms, or one-third of the thickness of slabs or toppings.

1.5.7 Special Properties and Products

Concrete may contain admixtures other than air entraining agents, such as water reducers, superplasticizers, or set retarding agents to provide special properties to the concrete, if specified or approved. Any of these materials to be used on the project shall be used in the mix design studies.

*2
1.5.7.1 Reflectivity of Concrete

Concrete for exterior slabs exposed to view in tbe finished work shall be so constituted as to have a reflectivity (albedo) of not less than 0.35. Colors of aggregates and cementitious materials shall be selected to achieve this property in the cured concrete.

1.6 MIXTURE PROPORTIONS

Concrete shall be composed of portland cement, other cementitious and pozzolanic materials as specified, aggregates, water and admixtures as specified.

1.6.1 Proportioning Studies

Trial design batches, mixture proportioning studies, and testing

requirements for various classes and types of concrete specified shall be the responsibility of the Contractor. Mixture proportions shall be based on compressive strength as determined by test specimens fabricated in accordance with ASTM C 192/C 192M and tested in accordance with ASTM C 39/C 39M. Samples of all materials used in mixture proportioning studies shall be representative of those proposed for use in the project and shall be accompanied by the manufacturer's or producer's test reports indicating compliance with these specifications. Trial mixtures having proportions, consistencies, and air content suitable for the work shall be made based on methodology described in ACI 211.1, using at least three different water-cement ratios for each type of mixture, which will produce a range of strength encompassing those required for each class and type of concrete required on the project. The maximum water-cement ratios required in subparagraph Water-Cement Ratio will be the equivalent water-cement ratio as determined by conversion from the weight ratio of water to cement plus pozzolan, and ground granulated blast furnace slag (GGBF slag) by the weight equivalency method as described in ACI 211.1. In the case where or GGBF slag is used, the weight of the and GGBF slag shall be included in the equations in ACI 211.1 for the term P, which is used to denote the weight of pozzolan. If pozzolan is used in the concrete mixture, the minimum pozzolan content shall be 15 percent by weight of the total cementitious material, and the maximum shall be 35 percent. Laboratory trial mixtures shall be designed for maximum permitted slump and air content. Separate sets of trial mixture studies shall be made for each combination of cementitious materials and each combination of admixtures proposed for use. No combination of either shall be used until proven by such studies, except that, if approved in writing and otherwise permitted by these specifications, an accelerator or a retarder may be used without separate trial mixture study. Separate trial mixture studies shall also be made for concrete for any conveying or placing method proposed which requires special properties and for concrete to be placed in unusually difficult placing locations. The temperature of concrete in each trial batch shall be reported. For each water-cement ratio, at least three test cylinders for each test age shall be made and cured in accordance withASTM C 192/C 192M. They shall be tested at 7 and 28 days in accordance with ASTM C 39/C 39M. From these test results, a curve shall be plotted showing the relationship between water-cement ratio and strength for each set of trial mix studies. In addition, a curve shall be plotted showing the relationship between 7 day and 28 day strengths. Each mixture shall be designed to promote easy and suitable concrete placement, consolidation and finishing, and to prevent segregation and excessive bleeding.

1.6.2 Average Compressive Strength Required for Mixtures

The mixture proportions selected during mixture design studies shall produce a required average compressive strength (f'cr) exceeding the specified compressive strength (f'c) by the amount indicated below. This required average compressive strength, f'cr, will not be a required acceptance criteria during concrete production. However, whenever the daily average compressive strength at 28 days drops below f'cr during concrete production, or daily average 7-day strength drops below a strength correlated with the 28-day f'cr, the mixture shall be adjusted, as approved, to bring the daily average back up to f'cr. During production, the required f'cr shall be adjusted, as appropriate, based on the standard deviation being attained on the job.

1.6.2.1 Computations from Test Records

Where a concrete production facility has test records, a standard deviation

shall be established in accordance with the applicable provisions of ACI 214.3R. Test records from which a standard deviation is calculated shall represent materials, quality control procedures, and conditions similar to those expected; shall represent concrete produced to meet a specified strength or strengths (f'c) within 1,000 psi of that specified for proposed work; and shall consist of at least 30 consecutive tests. A strength test shall be the average of the strengths of two cylinders made from the same sample of concrete and tested at 28 days. Required average compressive strength f'cr used as the basis for selection of concrete proportions shall be the larger of the equations that follow using the standard deviation as determined above:

f'cr = f'c + 1.34S where units are in psi

f'cr = f'c + 2.33S - 500 where units are in psi

Where S = standard deviation

Where a concrete production facility does not have test records meeting the requirements above but does have a record based on 15 to 29 consecutive tests, a standard deviation shall be established as the product of the calculated standard deviation and a modification factor from the following table:

NUMBER OF TESTS	MODIFICATION FACTOR FOR STANDARD DEVIATION
15	1.16
20	1.08
25	1.03
30 or more	1.00

1.6.2.2 Computations without Previous Test Records

When a concrete production facility does not have sufficient field strength test records for calculation of the standard deviation, the required average strength f'cr shall be determined as follows:

a. If the specified compressive strength f'c is less than 3,000 psi,

f'cr = f'c + 1000 psi

b. If the specified compressive strength f'c is 3,000 to 5,000 psi,

f'cr = f'c + 1,200 psi

c. If the specified compressive strength f'c is over 5,000 psi,

f'cr = f'c + 1,400 psi

1.7 STORAGE OF MATERIALS

Cement and other cementitious materials shall be stored in weathertight buildings, bins, or silos which will exclude moisture and contaminants and keep each material completely separated. Aggregate stockpiles shall be arranged and used in a manner to avoid excessive segregation and to prevent contamination with other materials or with other sizes of aggregates. Aggregate shall not be stored directly on ground unless a sacrificial layer is left undisturbed. Reinforcing bars and accessories shall be stored

above the ground on platforms, skids or other supports. Other materials shall be stored in such a manner as to avoid contamination and deterioration. Admixtures which have been in storage at the project site for longer than 6 months or which have been subjected to freezing shall not be used unless retested and proven to meet the specified requirements. Materials shall be capable of being accurately identified after bundles or containers are opened.

1.8 GOVERNMENT ASSURANCE INSPECTION AND TESTING

Day-to day inspection and testing shall be the responsibility of the Contractor Quality Control (CQC) staff. However, representatives of the Contracting Officer can and will inspect construction as considered appropriate and will monitor operations of the Contractor's CQC staff. Government inspection or testing will not relieve the Contractor of any of his CQC responsibilities.

1.8.1 Materials

The Government will sample and test aggregates, cementitious materials, other materials, and concrete to determine compliance with the specifications as considered appropriate. The Contractor shall provide facilities and labor as may be necessary for procurement of representative test samples. Samples of aggregates will be obtained at the point of batching in accordance with ASTM D 75. Other materials will be sampled from storage at the jobsite or from other locations as considered appropriate. Samples may be placed in storage for later testing when appropriate.

1.8.2 Fresh Concrete

Fresh concrete will be sampled as delivered in accordance with ASTM C 172 and tested in accordance with these specifications, as considered necessary.

1.8.3 Hardened Concrete

Tests on hardened concrete will be performed by the Government when such tests are considered necessary.

1.8.4 Inspection

Concrete operations may be tested and inspected by the Government as the project progresses. Failure to detect defective work or material will not prevent rejection later when a defect is discovered nor will it obligate the Government for final acceptance.

PART 2 PRODUCTS

2.1 CEMENTITIOUS MATERIALS

Cementitious Materials shall be portland cement, or portland cement in combination with pozzolan or ground granulated blast furnace slag and shall conform to appropriate specifications listed below. Use of cementitious materials in concrete which will have surfaces exposed in the completed structure shall be restricted so there is no change in color, source, or type of cementitious material.

2.1.1 Portland Cement

ASTM C 150, Type I with a maximum 15 percent amount of tricalcium aluminate, or Type II including false set requirements.

2.1.2 Pozzolan (Fly Ash)

ASTM C 618, Class F with the optional requirements for multiple factor, drying shrinkage, and uniformity from Table 2A of ASTM C 618. . If pozzolan is used, it shall never be less than 15 percent nor more than 35 percent by weight of the total cementitious material. The Contractor shall comply with EPA requirements in accordance with Section 01670 RECYCLED / RECOVERED MATERIALS. Percentage of posr-industrual recycled material shall be sufficient to result in a 5 perdent recycled content in concrete containing flu ash.

2.1.3 Ground Granulated Blast-Furnace (GGBF) Slag

ASTM C 989, Grade 120.

2.2 AGGREGATES

Aggregates shall conform to the following.

2.2.1 Fine Aggregate

Fine aggregate shall conform to the quality and gradation requirements of ASTM C 33.

2.2.2 Coarse Aggregate

Coarse aggregate shall conform to ASTM C 33, Class 5S, size designation 57.

2.3 CHEMICAL ADMIXTURES

Chemical admixtures, when required or permitted, shall conform to the appropriate specification listed. Admixtures shall be furnished in liquid form and of suitable concentration for easy, accurate control of dispensing.

2.3.1 Air-Entraining Admixture

ASTM C 260 and shall consistently entrain the air content in the specified ranges under field conditions.

2.3.2 Accelerating Admixture

ASTM C 494/C 494M, Type C or E, except that calcium chloride or admixtures containing calcium chloride shall not be used.

2.3.3 Water-Reducing or Retarding Admixture

ASTM C 494/C 494M, Type A, B, or D, except that the 6-month and 1-year compressive and flexural strength tests are waived.

2.3.4 High-Range Water Reducer

ASTM C 494/C 494M, Type F or G, except that the 6-month and 1-year strength requirements are waived. The admixture shall be used only when approved in writing, such approval being contingent upon particular mixture control as

described in the Contractor's Quality Control Plan and upon performance of separate mixture design studies.

2.3.5 Expanding Admixture

Aluminum powder type expanding admixture conforming to ASTM C 937.

2.3.6 Other Chemical Admixtures

Chemical admixtures for use in producing flowing concrete shall comply with ASTM C 1017/C 1017M, Type I or II. These admixtures shall be used only when approved in writing, such approval being contingent upon particular mixture control as described in the Contractor's Quality Control Plan and upon performance of separate mixture design studies.

2.4 CURING MATERIALS

2.4.1 Impervious-Sheet

Impervious-sheet materials shall conform to ASTM C 171, type optional, except, that polyethylene sheet shall not be used.

2.4.2 Membrane-Forming Compound

Membrane-Forming curing compound shall conform to ASTM C 309, Type 1-D or 2, except that only a styrene acrylate or chlorinated rubber compound meeting Class B requirements shall be used for surfaces that are to be painted or are to receive bituminous roofing, or waterproofing, or floors that are to receive adhesive applications of resilient flooring. The curing compound selected shall be compatible with any subsequent paint, roofing, waterproofing, or flooring specified. Nonpigmented compound shall contain a fugitive dye, and shall have the reflective requirements in ASTM C 309 waived.

2.4.3 Burlap and Cotton Mat

Burlap and cotton mat used for curing shall conform to AASHTO M 182.

2.5 WATER

Water for mixing and curing shall be fresh, clean, potable, and free of injurious amounts of oil, acid, salt, or alkali, except that non-potable water may be used if it meets the requirements of COE CRD-C 400.

2.6 NONSHRINK GROUT

Nonshrink grout shall conform to ASTM C 1107, Grade B, and shall be a non-metallic commercial formulation suitable for the proposed application.

2.7 LATEX BONDING AGENT

Latex agents for bonding fresh to hardened concrete shall conform to ASTM C 1059.

2.8 EPOXY RESIN

Epoxy resins for use in repairs shall conform to ASTM C 881, Type V, Grade 2. Class as appropriate to the existing ambient and surface temperatures.

2.9 EMBEDDED ITEMS

Embedded items shall be of the size and type indicated or as needed for the application. Dovetail slots shall be galvanized steel. Hangers for suspended ceilings shall be as specified in Section 09510 ACOUSTICAL CEILINGS. Inserts for shelf angles and bolt hangers shall be of malleable iron or cast or wrought steel.

2.10 FLOOR HARDENER

Floor hardener shall be a colorless aqueous solution containing zinc silicofluoride, magnesium silicofluoride, or sodium silicofluoride. These silicofluorides can be used individually or in combination. Proprietary hardeners may be used if approved in writing by the Contracting Officer. Provide where "sealed concrete" is indicated in Room Finish Schedule and for apparatus bays under base bid. Omit when bid otion of fluid-applied flooring is accepted.

2.11 PERIMETER INSULATION

Perimeter insulation shall be polystyrene conforming to ASTM C 578, Type II; polyurethane conforming to ASTM C 591, Type II; or cellular glass conforming to ASTM C 552, Type I or IV. The Contractor shall comply with EPA requirements in accordance with Section 01670 RECYCLED / RECOVERED MATERIALS.

2.12 VAPOR BARRIER

Vapor barrier shall be polyethylene sheeting with a minimum thickness of 6 mils or other equivalent material having a vapor permeance rating not exceeding 0.5 perms as determined in accordance with ASTM E 96.

2.13 JOINT MATERIALS

2.13.1 Joint Fillers, Sealers

Expansion joint fillers shall be preformed materials conforming to ASTM D 1752. Materials for and sealing of joints shall conform to the requirements of Section 07900A JOINT SEALING.

2.13.2 Contraction Joints in Slabs

Sawable type contraction joint inserts shall conform to COE CRD-C 540. Nonsawable joint inserts shall have sufficient stiffness to permit placement in plastic concrete without undue deviation from a straight line and shall conform to the physical requirements of COE CRD-C 540, with the exception of Section 3.4 "Resistance to Sawing". Plastic inserts shall be polyvinyl chloride conforming to the materials requirements of COE CRD-C 572.

2.14 SYNTHETIC FIBERS FOR REINFORCING

Synthetic fibers shall conform to ASTM C 1116, Type III, Synthetic Fiber, and as follows. Fibers shall be 100 percent virgin polypropylene fibrillated fibers containing no reprocessed olefin materials. Fibers shall have a specific gravity of 0.9, a minimum tensile strength of 70 ksi graded per manufacturer, and specifically manufactured to an optimum gradation for use as concrete secondary reinforcement.

PART 3 EXECUTION

3.1 PREPARATION FOR PLACING

Before commencing concrete placement, the following shall be performed. Surfaces to receive concrete shall be clean and free from frost, ice, mud, and water. Forms shall be in place, cleaned, coated, and adequately supported, in accordance with Section 03100A STRUCTURAL CONCRETE FORMWORK. Reinforcing steel shall be in place, cleaned, tied, and adequately supported, in accordance with Section 03200A CONCRETE REINFORCEMENT. Transporting and conveying equipment shall be in-place, ready for use, clean, and free of hardened concrete and foreign material. Equipment for consolidating concrete shall be at the placing site and in proper working order. Equipment and material for curing and for protecting concrete from weather or mechanical damage shall be at the placing site, in proper working condition and in sufficient amount for the entire placement. When hot, windy conditions during concreting appear probable, equipment and material shall be at the placing site to provide windbreaks, shading, fogging, or other action to prevent plastic shrinkage cracking or other damaging drying of the concrete.

3.1.1 Foundations

3.1.1.1 Concrete on Earth Foundations

Earth (subgrade, base, or subbase courses) surfaces upon which concrete is to be placed shall be clean, damp, and free from debris, frost, ice, and standing or running water. Prior to placement of concrete, the foundation shall be well drained and shall be satisfactorily graded and uniformly compacted.

3.1.1.2 Excavated Surfaces in Lieu of Forms

Concrete for footings may be placed directly against the soil provided the earth or rock has been carefully trimmed, is uniform and stable, and meets the compaction requirements of Section 02300 EARTHWORK. The concrete shall be placed without becoming contaminated by loose material, and the outline of the concrete shall be within the specified tolerances.

3.1.2 Preparation of Previously Placed Concrete

Concrete surfaces to which other concrete is to be bonded shall be abraded in an approved manner that will expose sound aggregate uniformly without damaging the concrete. Laitance and loose particles shall be removed. Surfaces shall be thoroughly washed and shall be moist but without free water when concrete is placed.

3.1.3 Vapor Barrier

Vapor barrier shall be provided beneath the interior on-grade concrete floor slabs. The greatest widths and lengths practicable shall be used to eliminate joints wherever possible. Joints shall be lapped a minimum of 12 inches. Torn, punctured, or damaged vapor barrier material shall be removed and new vapor barrier shall be provided prior to placing concrete. For minor repairs, patches may be made using laps of at least 12 inches. Lapped joints shall be sealed and edges patched with pressure-sensitive adhesive or tape not less than 2 inches wide and compatible with the membrane. Vapor barrier shall be placed directly on underlying subgrade, base course, or capillary water barrier, unless it consists of crushed

material or large granular material which could puncture the vapor barrier. In this case, the surface shall be choked with a light layer of sand, as approved, before placing the vapor barrier. Concrete placement shall be controlled so as to prevent damage to the vapor barrier.

3.1.4 Perimeter Insulation

Perimeter insulation shall be installed at locations indicated. Adhesive shall be used where insulation is applied to the interior surface of foundation walls and may be used for exterior application.

3.1.5 Embedded Items

Before placement of concrete, care shall be taken to determine that all embedded items are firmly and securely fastened in place as indicated on the drawings, or required. Conduit and other embedded items shall be clean and free of oil and other foreign matter such as loose coatings or rust, paint, and scale. The embedding of wood in concrete will be permitted only when specifically authorized or directed. The embedding of aluminum in concrete is prohibited. Voids in sleeves, inserts, and anchor slots shall be filled temporarily with readily removable materials to prevent the entry of concrete into voids. Welding shall not be performed on embedded metals within 1 feet of the surface of the concrete except as indicated. Tack welding shall not be performed on or to embedded items.

3.2 CONCRETE PRODUCTION

3.2.1 Batching, Mixing, and Transporting Concrete

Concrete shall either be batched and mixed onsite or shall be furnished from a ready-mixed concrete plant. Ready-mixed concrete shall be batched, mixed, and transported in accordance with ASTM C 94/C 94M, except as otherwise specified. Truck mixers, agitators, and nonagitating transporting units shall comply with NRMCA TMMB 100. Ready-mix plant equipment and facilities shall be certified in accordance with NRMCA QC 3. Approved batch tickets shall be furnished for each load of ready-mixed concrete. Site-mixed concrete shall conform to the following subparagraphs.

3.2.1.1 General

The batching plant shall be located off site close to the project. The batching plant shall conform to the requirements of NRMCA CPMB 100 and as specified; however, rating plates attached to batch plant equipment are not required.

3.2.1.2 Batching Equipment

The batching controls shall be semiautomatic or automatic, as defined in NRMCA CPMB 100. A semiautomatic batching system shall be provided with interlocks such that the discharge device cannot be actuated until the indicated material is within the applicable tolerance. The batching system shall be equipped with accurate recorder or recorders that meet the requirements of NRMCA CPMB 100. The weight of water and admixtures shall be recorded if batched by weight. Separate bins or compartments shall be provided for each size group of aggregate and type of cementitious material, to prevent intermingling at any time. Aggregates shall be weighed either in separate weigh batchers with individual scales or, provided the smallest size is batched first, cumulatively in one weigh

batcher on one scale. Aggregate shall not be weighed in the same batcher with cementitious material. If both portland cement and other cementitious material are used, they may be batched cumulatively, provided that the portland cement is batched first. Water may be measured by weight or volume. Water shall not be weighed or measured cumulatively with another ingredient. Filling and discharging valves for the water metering or batching system shall be so interlocked that the discharge valve cannot be opened before the filling valve is fully closed. Piping for water and for admixtures shall be free from leaks and shall be properly valved to prevent backflow or siphoning. Admixtures shall be furnished as a liquid of suitable concentration for easy control of dispensing. An adjustable, accurate, mechanical device for measuring and dispensing each admixture shall be provided. Each admixture dispenser shall be interlocked with the batching and discharging operation of the water so that each admixture is separately batched and individually discharged automatically in a manner to obtain uniform distribution throughout the water as it is added to the batch in the specified mixing period. When use of truck mixers makes this requirement impractical, the admixture dispensers shall be interlocked with the sand batchers. Different admixtures shall not be combined prior to introduction in water and shall not be allowed to intermingle until in contact with the cement. Admixture dispensers shall have suitable devices to detect and indicate flow during dispensing or have a means for visual observation. The plant shall be arranged so as to facilitate the inspection of all operations at all times. Suitable facilities shall be provided for obtaining representative samples of aggregates from each bin or compartment, and for sampling and calibrating the dispensing of cementitious material, water, and admixtures. Filling ports for cementitious materials bins or silos shall be clearly marked with a permanent sign stating the contents.

3.2.1.3 Scales

The weighing equipment shall conform to the applicable requirements of CPMB Concrete Plant Standard, and of NIST HB 44, except that the accuracy shall be plus or minus 0.2 percent of scale capacity. The Contractor shall provide standard test weights and any other auxiliary equipment required for checking the operating performance of each scale or other measuring devices. The tests shall be made at the specified frequency in the presence of a Government inspector. The weighing equipment shall be arranged so that the plant operator can conveniently observe all dials or indicators.

3.2.1.4 Batching Tolerances

(A) Tolerances with Weighing Equipment

MATERIAL	PERCENT OF REQUIRED WEIGHT
Cementitious materials	0 to plus 2
Aggregate	plus or minus 2
Water	plus or minus 1
Chemical admixture	0 to plus 6

(B) Tolerances with Volumetric Equipment

For volumetric batching equipment used for water and admixtures, the

following tolerances shall apply to the required volume of material being batched:

MATERIAL	PERCENT OF REQUIRED MATERIAL
Water:	plus or minus 1 percent
Chemical admixtures:	0 to plus 6 percent

3.2.1.5 Moisture Control

The plant shall be capable of ready adjustment to compensate for the varying moisture content of the aggregates and to change the weights of the materials being batched.

3.2.1.6 Concrete Mixers

Mixers shall be stationary mixers or truck mixers. Mixers shall be capable of combining the materials into a uniform mixture and of discharging this mixture without segregation. The mixers shall not be charged in excess of the capacity recommended by the manufacturer. The mixers shall be operated at the drum or mixing blade speed designated by the manufacturer. The mixers shall be maintained in satisfactory operating condition, and the mixer drums shall be kept free of hardened concrete. Should any mixer at any time produce unsatisfactory results, its use shall be promptly discontinued until it is repaired.

3.2.1.7 Stationary Mixers

Concrete plant mixers shall be drum-type mixers of tilting, nontilting, horizontal-shaft, or vertical-shaft type, or shall be pug mill type and shall be provided with an acceptable device to lock the discharge mechanism until the required mixing time has elapsed. The mixing time and uniformity shall conform to all the requirements in ASTM C 94/C 94M applicable to central-mixed concrete.

3.2.1.8 Truck Mixers

Truck mixers, the mixing of concrete therein, and concrete uniformity shall conform to the requirements of ASTM C 94/C 94M. A truck mixer may be used either for complete mixing (transit-mixed) or to finish the partial mixing done in a stationary mixer (shrink-mixed). Each truck shall be equipped with two counters from which it is possible to determine the number of revolutions at mixing speed and the number of revolutions at agitating speed. Water shall not be added at the placing site unless specifically approved; and in no case shall it exceed the specified w/c. Any such water shall be injected at the base of the mixer, not at the discharge end.

3.3 FIBER REINFORCED CONCRETE

Fiber reinforced concrete shall conform to ASTM C 1116 and as follows, using the fibers specified in PART 2. A minimum of 1.5 pounds of fibers per cubic yard of concrete shall be used. Fibers shall be added at the batch plant. The services of a qualified technical representative shall be provided to instruct the concrete supplier in proper batching and mixing of materials to be provided.

3.4 TRANSPORTING CONCRETE TO PROJECT SITE

Concrete shall be transported to the placing site in truck mixers, or by approved pumping equipment.

3.5 CONVEYING CONCRETE ON SITE

Concrete shall be conveyed from mixer or transporting unit to forms as rapidly as possible and within the time interval specified by methods which will prevent segregation or loss of ingredients using following equipment. Conveying equipment shall be cleaned before each placement.

3.5.1 Buckets

The interior hopper slope shall be not less than 58 degrees from the horizontal, the minimum dimension of the clear gate opening shall be at least 5 times the nominal maximum-size aggregate, and the area of the gate opening shall not be less than 2 square feet.The maximum dimension of the gate opening shall not be greater than twice the minimum dimension. The bucket gates shall be essentially grout tight when closed and may be manually, pneumatically, or hydraulically operated except that buckets larger than 2 cubic yardsshall not be manually operated. The design of the bucket shall provide means for positive regulation of the amount and rate of deposit of concrete in each dumping position.

3.5.2 Trucks

Truck mixers operating at agitating speed or truck agitators used for transporting plant-mixed concrete shall conform to the requirements of ASTM C 94/C 94M. Nonagitating equipment shall be used only for transporting plant-mixed concrete over a smooth road and when the hauling time is less than 15 minutes. Bodies of nonagitating equipment shall be smooth, watertight, metal containers specifically designed to transport concrete, shaped with rounded corners to minimize segregation, and equipped with gates that will permit positive control of the discharge of the concrete.

3.5.3 Chutes

When concrete can be placed directly from a truck mixer, agitator, or nonagitating equipment, the chutes normally attached to this equipment by the manufacturer may be used. A discharge deflector shall be used when required by the Contracting Officer. Separate chutes and other similar equipment will not be permitted for conveying concrete.

3.5.4 Concrete Pumps

Concrete may be conveyed by positive displacement pump when approved. The pumping equipment shall be piston or squeeze pressure type; pneumatic placing equipment shall not be used. The pipeline shall be rigid steel pipe or heavy-duty flexible hose. The inside diameter of the pipe shall be at least 3 times the nominal maximum-size coarse aggregate in the concrete mixture to be pumped but not less than 4 inches. Aluminum pipe shall not be used.

3.6 PLACING CONCRETE

Mixed concrete shall be discharged within 1-1/2 hours or before the mixer drum has revolved 300 revolutions, whichever comes first after the introduction of the mixing water to the cement and aggregates. When the

concrete temperature exceeds 85 degrees F, the time shall be reduced to 45 minutes. Concrete shall be placed within 15 minutes after it has been discharged from the transporting unit. Concrete shall be handled from mixer or transporting unit to forms in a continuous manner until the approved unit of operation is completed. Adequate scaffolding, ramps and walkways shall be provided so that personnel and equipment are not supported by in-place reinforcement. Placing will not be permitted when the sun, heat, wind, or limitations of facilities furnished by the Contractor prevent proper consolidation, finishing and curing. Sufficient placing capacity shall be provided so that concrete can be kept free of cold joints.

3.6.1 Depositing Concrete

Concrete shall be deposited as close as possible to its final position in the forms, and there shall be no vertical drop greater than 5 feet except where suitable equipment is provided to prevent segregation and where specifically authorized. Depositing of the concrete shall be so regulated that it will be effectively consolidated in horizontal layers not more than 12 inches thick, except that all slabs shall be placed in a single layer. Concrete to receive other construction shall be screeded to the proper level. Concrete shall be deposited continuously in one layer or in layers so that fresh concrete is deposited on in-place concrete that is still plastic. Fresh concrete shall not be deposited on concrete that has hardened sufficiently to cause formation of seams or planes of weakness within the section. Concrete that has surface dried, partially hardened, or contains foreign material shall not be used. When temporary spreaders are used in the forms, the spreaders shall be removed as their service becomes unnecessary. Concrete shall not be placed in slabs over columns and walls until concrete in columns and walls has been in-place at least two hours or until the concrete begins to lose its plasticity. Concrete for beams, girders, brackets, column capitals, haunches, and drop panels shall be placed at the same time as concrete for adjoining slabs.

3.6.2 Consolidation

Immediately after placing, each layer of concrete shall be consolidated by internal vibrators, except for slabs 4 inches thick or less. The vibrators shall at all times be adequate in effectiveness and number to properly consolidate the concrete; a spare vibrator shall be kept at the jobsite during all concrete placing operations. The vibrators shall have a frequency of not less than 10,000 vibrations per minute, an amplitude of at least 0.025 inch, and the head diameter shall be appropriate for the structural member and the concrete mixture being placed. Vibrators shall be inserted vertically at uniform spacing over the area of placement. The distance between insertions shall be approximately 1-1/2 times the radius of action of the vibrator so that the area being vibrated will overlap the adjacent just-vibrated area by a reasonable amount. The vibrator shall penetrate rapidly to the bottom of the layer and at least 6 inches into the preceding layer if there is such. Vibrator shall be held stationary until the concrete is consolidated and then vertically withdrawn slowly while operating. Form vibrators shall not be used unless specifically approved and unless forms are constructed to withstand their use. Vibrators shall not be used to move concrete within the forms. Slabs 4 inches and less in thickness shall be consolidated by properly designed vibrating screeds or other approved technique. Frequency and amplitude of vibrators shall be determined in accordance with COE CRD-C 521. Grate tampers ("jitterbugs") shall not be used.

3.6.3 Cold Weather Requirements

Cold weather procedures shall conform to ACI 306R and the following special requirements. Special protection measures, approved by the Contracting Officer, shall be used if freezing temperatures are anticipated before the expiration of the specified curing period. The ambient temperature of the air where concrete is to be placed and the temperature of surfaces to receive concrete shall be not less than 40 degrees F. The temperature of the concrete when placed shall be not less than 50 degrees F nor more than 75 degrees F. Heating of the mixing water or aggregates will be required to regulate the concrete placing temperature. Materials entering the mixer shall be free from ice, snow, or frozen lumps. Salt, chemicals or other materials shall not be incorporated in the concrete to prevent freezing. Upon written approval, an accelerating admixture conforming to ASTM C 494/C 494M, Type C or E may be used, provided it contains no calcium chloride. Calcium chloride shall not be used.

3.6.4 Hot Weather Requirements

Hot weather procedures shall conform to ACI 305R and the following requirements. When the ambient temperature during concrete placing is expected to exceed 85 degrees F, the concrete shall be placed and finished with procedures previously submitted and as specified herein. The concrete temperature at time of delivery to the forms shall not exceed the temperature shown in the table below when measured in accordance with ASTM C 1064/C 1064M. Cooling of the mixing water or aggregates or placing concrete in the cooler part of the day may be required to obtain an adequate placing temperature. A retarder may be used, as approved, to facilitate placing and finishing. Steel forms and reinforcements shall be cooled as approved prior to concrete placement when steel temperatures are greater than 120 degrees F. Conveying and placing equipment shall be cooled if necessary to maintain proper concrete-placing temperature.

Maximum Allowable Concrete Placing Temperature

Relative Humidity, Percent, During Time of Concrete Placement	Maximum Allowable Concrete Temperature Degrees
Greater than 60	90 F
40-60	85 F
Less than 40	80 F

3.6.5 Prevention of Plastic Shrinkage Cracking

During hot weather with low humidity, and particularly with appreciable wind, as well as interior placements when space heaters produce low humidity, the Contractor shall be alert to the tendency for plastic shrinkage cracks to develop and shall institute measures to prevent this. Particular care shall be taken if plastic shrinkage cracking is potentially imminent and especially if it has developed during a previous placement. Periods of high potential for plastic shrinkage cracking can be anticipated by use of Fig. 2.1.5 of ACI 305R. In addition the concrete placement shall be further protected by erecting shades and windbreaks and by applying fog sprays of water, sprinkling, ponding or wet covering. Plastic shrinkage cracks that occur shall be filled by injection of epoxy resin as directed, after the concrete hardens. Plastic shrinkage cracks shall never be

troweled over or filled with slurry.

3.6.6 Placing Concrete in Congested Areas

Special care shall be used to ensure complete filling of the forms, elimination of all voids, and complete consolidation of the concrete when placing concrete in areas congested with reinforcing bars, embedded items, and other tight spacing. An appropriate concrete mixture shall be used, and the nominal maximum size of aggregate (NMSA) shall meet the specified criteria when evaluated for the congested area. Vibrators with heads of a size appropriate for the clearances available shall be used, and the consolidation operation shall be closely supervised to ensure complete and thorough consolidation at all points. Where necessary, splices of reinforcing bars shall be alternated to reduce congestion. Where two mats of closely spaced reinforcing are required, the bars in each mat shall be placed in matching alignment to reduce congestion.

3.6.7 Placing Flowable Concrete

If a plasticizing admixture conforming to ASTM C 1017/C 1017M is used or if a Type F or G high range water reducing admixture is permitted to increase the slump, the concrete shall meet all requirements of paragraph GENERAL REQUIREMENTS in PART 1. Extreme care shall be used in conveying and placing the concrete to avoid segregation. Consolidation and finishing shall meet all requirements of paragraphs Placing Concrete, Finishing Formed Surfaces, and Finishing Unformed Surfaces. No relaxation of requirements to accommodate flowable concrete will be permitted.

3.7 JOINTS

Joints shall be located and constructed as indicated or approved. Joints not indicated on the drawings shall be located and constructed to minimize the impact on the strength of the structure. In general, such joints shall be located near the middle of the spans of supported slabs and beams. Joints in columns shall be at the underside of beams and at the tops of footings. Joints shall be perpendicular to the main reinforcement. All reinforcement shall be continued across joints; except that reinforcement or other fixed metal items shall not be continuous through expansion joints, or through construction or contraction joints in slabs on grade. Reinforcement shall be 2 inches clear from each joint. Except where otherwise indicated, construction joints between interior slabs on grade and vertical surfaces shall consist of 30 pound asphalt-saturated felt, extending for the full depth of the slab. The perimeters of the slabs shall be free of fins, rough edges, spalling, or other unsightly appearance. Reservoir for sealant for construction and contraction joints in slabs shall be formed to the dimensions shown on the drawings by removing snap-out joint-forming inserts, by sawing sawable inserts, or by sawing to widen the top portion of sawed joints. Joints to be sealed shall be cleaned and sealed as indicated and in accordance with Section 07900A JOINT SEALING.

3.7.1 Construction Joints

Concrete shall be placed continuously so that each unit is monolithic in construction. Fresh concrete shall not be placed against adjacent hardened concrete until it is at least 24 hours old. Construction joints shall be located as indicated or approved. Where concrete work is interrupted by weather, end of work shift or other similar type of delay, location and type of construction joint shall be subject to approval of the Contracting

Officer. Unless otherwise indicated and except for slabs on grade, reinforcing steel shall extend through construction joints. Construction joints in slabs on grade shall be keyed or doweled as shown. Concrete columns shall be in place at least 2 hours, or until the concrete begins to lose its plasticity, before placing concrete for beams, thereon. Where horizontal construction joints in columns are required, a strip of 1 inch square-edge lumber, bevelled and oiled to facilitate removal, shall be tacked to the inside of the forms at the construction joint. Concrete shall be placed to a point 1 inch above the underside of the strip. The strip shall be removed 1 hour after the concrete has been placed, and any irregularities in the joint line shall be leveled off with a wood float, and all laitance shall be removed. Prior to placing additional concrete, horizontal construction joints shall be prepared as specified in paragraph Previously Placed Concrete.

3.7.2 Contraction Joints in Slabs on Grade

Contraction joints shall be located and detailed as shown on the drawings. Contraction Joints shall be produced by forming a weakened plane in the concrete slab by use of snap-out plastic joint forming inserts or sawing a continuous slot with a concrete saw. Regardless of method used to produce the weakened plane, it shall be 1/4 the depth of the slab thickness and between 1/8 and 3/16 inch wide. For saw-cut joints, cutting shall be timed properly with the set of the concrete. Cutting shall be started as soon as the concrete has hardened sufficiently to prevent raveling of the edges of the saw cut. Cutting shall be completed before shrinkage stresses become sufficient to produce cracking and no later than 8 hours after placement of concrete. Reservoir for joint sealant shall be formed as previously specified.

3.7.3 Expansion Joints

Installation of expansion joints and sealing of these joints shall conform to the requirements of Section 03150A EXPANSION JOINTS AND CONTRACTION JOINTS and Section 07900A JOINT SEALING.

3.7.4 Dowels and Tie Bars

Dowels and tie bars shall be installed at the locations shown on the drawings and to the details shown, using materials and procedures specified in Section 03200A CONCRETE REINFORCEMENT and herein. Conventional smooth "paving" dowels shall be installed in slabs using approved methods to hold the dowel in place during concreting within a maximum alignment tolerance of 1/8 inch in 12 inches. "Structural" type deformed bar dowels, or tie bars, shall be installed to meet the specified tolerances. Care shall be taken during placing adjacent to and around dowels and tie bars to ensure there is no displacement of the dowel or tie bar and that the concrete completely embeds the dowel or tie bar and is thoroughly consolidated.

3.8 FINISHING FORMED SURFACES

Forms, form materials, and form construction are specified in Section 03100A STRUCTURAL CONCRETE FORMWORK. Finishing of formed surfaces shall be as specified herein. Unless another type of architectural or special finish is specified, surfaces shall be left with the texture imparted by the forms except that defective surfaces shall be repaired. Unless painting of surfaces is required, uniform color of the concrete shall be maintained by use of only one mixture without changes in materials or proportions for any structure or portion of structure that requires a Class B finish. Except

for major defects, as defined hereinafter, surface defects shall be repaired as specified herein within 24 hours after forms are removed. Repairs of the so-called "plaster-type" will not be permitted in any location. Tolerances of formed surfaces shall conform to the requirements of ACI 117. These tolerances apply to the finished concrete surface, not to the forms themselves; forms shall be set true to line and grade. Form tie holes requiring repair and other defects whose depth is at least as great as their surface diameter shall be repaired as specified in paragraph Damp-Pack Mortar Repair. Defects whose surface diameter is greater than their depth shall be repaired as specified in paragraph Repair of Major Defects. Repairs shall be finished flush with adjacent surfaces and with the same surface texture. Concrete with excessive honeycomb, or other defects which affect the strength of the member, will be rejected. Repairs shall be demonstrated to be acceptable and free from cracks or loose or drummy areas at the completion of the contract and, for Class B Finishes, shall be inconspicuous. Repairs not meeting these requirements will be rejected and shall be replaced.

3.8.1 Class B Finish

Class B finish is required for all formed surfaces which are exposed or painted in the finished structure.Fins, ravelings, and loose material shall be removed, all surface defects over 1/2 inch in diameter or more than 1/2 inch deep, shall be repaired and, except as otherwise indicated or as specified in Section 03100A STRUCTURAL CONCRETE FORMWORK, holes left by removal of form ties shall be reamed and filled. Defects more than 1/2 inch in diameter shall be cut back to sound concrete, but in all cases at least 1 inch deep.

3.8.2 Class C Finish

Class C finish is required all formed surfaces which are not exposed or painted in the finished structure. Fins, ravelings, and loose material shall be removed, and, except as otherwise indicated or as specified in Section 03100A STRUCTURAL CONCRETE FORMWORK, holes left by removal of form ties shall be reamed and filled. Honeycomb and other defects more than 1/2 inch deep or more than 2 inches in diameter shall be repaired. Defects more than 2 inches in diameter shall be cut back to sound concrete, but in all cases at least 1 inch deep.

3.9 REPAIRS

3.9.1 Damp-Pack Mortar Repair

Form tie holes requiring repair and other defects whose depth is at least as great as their surface diameter but not over 4 inchesshall be repaired by the damp-pack mortar method. Form tie holes shall be reamed and other similar defects shall be cut out to sound concrete. The void shall then be thoroughly cleaned, thoroughly wetted, brush-coated with a thin coat of neat cement grout and filled with mortar. Mortar shall be a stiff mix of 1 part portland cement to 2 parts fine aggregate passing the No. 16 mesh sieve, and minimum amount of water. Only sufficient water shall be used to produce a mortar which, when used, will stick together on being molded into a ball by a slight pressure of the hands and will not exude water but will leave the hands damp. Mortar shall be mixed and allowed to stand for 30 to 45 minutes before use with remixing performed immediately prior to use. Mortar shall be thoroughly tamped in place in thin layers using a hammer and hardwood block. Holes passing entirely through walls shall be completely filled from the inside face by forcing mortar through to the

outside face. All holes shall be packed full. Damp-pack repairs shall be moist cured for at least 48 hours.

3.9.2 Repair of Major Defects

Major defects will be considered to be those more than 1/2 inch deep or, for Class B finish, more than 1/2 inch in diameter and, for Class C finish, more than 2 inches in diameter. Also included are any defects of any kind whose depth is over 4 inches or whose surface diameter is greater than their depth. Major defects shall be repaired as specified below.

3.9.2.1 Surface Application of Mortar Repair

Defective concrete shall be removed, and removal shall extend into completely sound concrete. Approved equipment and procedures which will not cause cracking or microcracking of the sound concrete shall be used. If reinforcement is encountered, concrete shall be removed so as to expose the reinforcement for at least 2 inches on all sides. All such defective areas greater than 12 square inchesshall be outlined by saw cuts at least 1 inch deep. Defective areas less than 12 square inches shall be outlined by a 1 inch deep cut with a core drill in lieu of sawing. All saw cuts shall be straight lines in a rectangular pattern in line with the formwork panels. After concrete removal, the surface shall be thoroughly cleaned by high pressure washing to remove all loose material. Surfaces shall be kept continually saturated for the first 12 of the 24 hours immediately before placing mortar and shall be damp but not wet at the time of commencing mortar placement. The Contractor, at his option, may use either hand-placed mortar or mortar placed with a mortar gun. If hand-placed mortar is used, the edges of the cut shall be perpendicular to the surface of the concrete. The prepared area shall be brush-coated with a thin coat of neat cement grout. The repair shall then be made using a stiff mortar, preshrunk by allowing the mixed mortar to stand for 30 to 45 minutes and then remixed, thoroughly tamped into place in thin layers. If hand-placed mortar is used, the Contractor shall test each repair area for drumminess by firm tapping with a hammer and shall inspect for cracks, both in the presence of the Contracting Officer's representative, immediately before completion of the contract, and shall replace any showing drumminess or cracking. If mortar placed with a mortar gun is used, the gun shall be a small compressed air-operated gun to which the mortar is slowly hand fed and which applies the mortar to the surface as a high-pressure stream, as approved. Repairs made using shotcrete equipment will not be accepted. The mortar used shall be the same mortar as specified for damp-pack mortar repair. If gun-placed mortar is used, the edges of the cut shall be beveled toward the center at a slope of 1:1. All surface applied mortar repairs shall be continuously moist cured for at least 7 days. Moist curing shall consist of several layers of saturated burlap applied to the surface immediately after placement is complete and covered with polyethylene sheeting, all held closely in place by a sheet of plywood or similar material rigidly braced against it. Burlap shall be kept continually wet.

3.9.2.2 Repair of Deep and Large Defects

Deep and large defects will be those that are more than 6 inches deep and also have an average diameter at the surface more than 18 inches or that are otherwise so identified by the Project Office. Such defects shall be repaired as specified herein or directed, except that defects which affect the strength of the structure shall not be repaired and that portion of the structure shall be completely removed and replaced. Deep and large defects

shall be repaired by procedures approved in advance including forming and placing special concrete using applied pressure during hardening. Preparation of the repair area shall be as specified for surface application of mortar. In addition, the top edge (surface) of the repair area shall be sloped at approximately 20 degrees from the horizontal, upward toward the side from which concrete will be placed. The special concrete shall be a concrete mixture with low water content and low slump, and shall be allowed to age 30 to 60 minutes before use. Concrete containing a specified expanding admixture may be used in lieu of the above mixture; the paste portion of such concrete mixture shall be designed to have an expansion between 2.0 and 4.0 percent when tested in accordance with ASTM C 940. A full width "chimney" shall be provided at the top of the form on the placing side to ensure filling to the top of the opening. A pressure cap shall be used on the concrete in the chimney with simultaneous tightening and revibrating the form during hardening to ensure a tight fit for the repair. The form shall be removed after 24 hours and immediately the chimney shall be carefully chipped away to avoid breaking concrete out of the repair; the surface of the repair concrete shall be dressed as required.

3.10 FINISHING UNFORMED SURFACES

The finish of all unformed surfaces shall meet the requirements of paragraph Tolerances in PART 1, when tested as specified herein.

3.10.1 General

The ambient temperature of spaces adjacent to unformed surfaces being finished and of the base on which concrete will be placed shall be not less than 50 degrees F. In hot weather all requirements of paragraphs Hot Weather Requirements and Prevention of Plastic Shrinkage Cracking shall be met. Unformed surfaces that are not to be covered by additional concrete or backfill shall have a float finish, with additional finishing as specified below, and shall be true to the elevation shown on the drawings. Surfaces to receive additional concrete or backfill shall be brought to the elevation shown on the drawings, properly consolidated, and left true and regular. Unless otherwise shown on the drawings, exterior surfaces shall be sloped for drainage, as directed. Where drains are provided, interior floors shall be evenly sloped to the drains. Joints shall be carefully made with a jointing or edging tool. The finished surfaces shall be protected from stains or abrasions. Grate tampers or "jitterbugs" shall not be used for any surfaces. The dusting of surfaces with dry cement or other materials or the addition of any water during finishing shall not be permitted. If bleedwater is present prior to finishing, the excess water shall be carefully dragged off or removed by absorption with porous materials such as burlap. During finishing operations, extreme care shall be taken to prevent over finishing or working water into the surface; this can cause "crazing" (surface shrinkage cracks which appear after hardening) of the surface. Any slabs with surfaces which exhibit significant crazing shall be removed and replaced. During finishing operations, surfaces shall be checked with a 10 foot straightedge, applied in both directions at regular intervals while the concrete is still plastic, to detect high or low areas.

3.10.2 Rough Slab Finish

As a first finishing operation for unformed surfaces and as final finish for slabs to receive mortar setting beds, the surface shall receive a rough slab finish prepared as follows. The concrete shall be uniformly placed

across the slab area, consolidated as previously specified, and then screeded with straightedge strikeoffs immediately after consolidation to bring the surface to the required finish level with no coarse aggregate visible. Side forms and screed rails shall be provided, rigidly supported, and set to exact line and grade. Allowable tolerances for finished surfaces apply only to the hardened concrete, not to forms or screed rails. Forms and screed rails shall be set true to line and grade. "Wet screeds" shall not be used.

3.10.3 Floated Finish

Slabs to receive more than a rough slab finish shall next be given a wood float finish. All slabs on grade not recessed for mortar setting beds, and all elevated floor slabs shall receive a floated finish. Floated finish shall be the final finish of all slabs not exposed to view in the finished structure. The screeding shall be followed immediately by darbying or bull floating before bleeding water is present, to bring the surface to a true, even plane. Then, after the concrete has stiffened so that it will withstand a man's weight without imprint of more than 1/4 inch and the water sheen has disappeared, it shall be floated to a true and even plane free of ridges. Floating shall be performed by use of suitable hand floats or power driven equipment. Sufficient pressure shall be used on the floats to bring a film of moisture to the surface. Hand floats shall be made of wood, magnesium, or aluminum. Concrete that exhibits stickiness shall be floated with a magnesium float. Care shall be taken to prevent over-finishing or incorporating water into the surface.

3.10.4 Troweled Finish

All slabs on grade and all elevated slabs exposed to view in the final structure shall receive a troweled finish. After floating is complete and after the surface moisture has disappeared, unformed surfaces shall be steel-troweled to a smooth, even, dense finish, free from blemishes including trowel marks. In lieu of hand finishing, an approved power finishing machine may be used in accordance with the directions of the machine manufacturer. Additional trowelings shall be performed, either by hand or machine until the surface has been troweled 4 times, with waiting period between each. Care shall be taken to prevent blistering and if such occurs, troweling shall immediately be stopped and operations and surfaces corrected. A final hard steel troweling shall be done by hand, with the trowel tipped, and using hard pressure, when the surface is at a point that the trowel will produce a ringing sound. The finished surface shall be thoroughly consolidated and shall be essentially free of trowel marks and be uniform in texture and appearance. The concrete mixture used for troweled finished areas shall be adjusted, if necessary, in order to provide sufficient fines (cementitious material and fine sand) to finish properly.

3.10.5 Non-Slip Finish

Non-slip floors shall be constructed in accordance with the following subparagraphs.

3.10.5.1 Broomed

Exterior walking surfaces and other areas as indicated on the drawings shall be given a broomed finish. After floating, the surface shall be lightly steel troweled, and then carefully scored by pulling a coarse fiber push-type broom across the surface. Brooming shall be transverse to

traffic or at right angles to the slope of the slab. After the end of the curing period, the surface shall be vigorously broomed with a coarse fiber broom to remove all loose or semi-detached particles.

3.11 FLOOR HARDENER

Areas as indicated on the drawings shall be treated with floor hardener. Floor hardener shall be applied after the concrete has been cured and then air dried for 28 days. Three coats shall be applied, each the day after the preceding coat was applied. For the first application, one pound of the silocofluoride shall be dissolved in one gallon of water. For subsequent applications, the solution shall be two pounds of silicofluoride to each gallon of water. Floor should be mopped with clear water shortly after the preceding application has dried to remove encrusted salts. Proprietary hardeners shall be applied in accordance with the manufacturer's instructions. During application, area should be well ventilated. Precautions shall be taken when applying silicofluorides due to the toxicity of the salts. Any compound that contacts glass or aluminum should be immediately removed with clear water.

3.12 CURING AND PROTECTION

3.12.1 General

Concrete shall be cured by an approved method for the period of 7 days.

Immediately after placement, concrete shall be protected from premature drying, extremes in temperatures, rapid temperature change, mechanical injury and damage from rain and flowing water for the duration of the curing period. Air and forms in contact with concrete shall be maintained at a temperature above 50 degrees F for the first 3 days and at a temperature above 32 degrees F for the remainder of the specified curing period. Exhaust fumes from combustion heating units shall be vented to the outside of the enclosure, and heaters and ducts shall be placed and directed so as not to cause areas of overheating and drying of concrete surfaces or to create fire hazards. Materials and equipment needed for adequate curing and protection shall be available and at the site prior to placing concrete. No fire or excessive heat, including welding, shall be permitted near or in direct contact with the concrete at any time. Except as otherwise permitted by paragraph Membrane Forming Curing Compounds, moist curing shall be provided for any areas to receive any paint or other applied coating, or to which other concrete is to be bonded. Except for plastic coated burlap, impervious sheeting alone shall not be used for curing.

3.12.2 Moist Curing

Concrete to be moist-cured shall be maintained continuously wet for the entire curing period, commencing immediately after finishing. If water or curing materials used stain or discolor concrete surfaces which are to be permanently exposed, the concrete surfaces shall be cleaned as approved. When wooden forms are left in place during curing, they shall be kept wet at all times. If steel forms are used in hot weather, nonsupporting vertical forms shall be broken loose from the concrete soon after the concrete hardens and curing water continually applied in this void. If the forms are removed before the end of the curing period, curing shall be carried out as on unformed surfaces, using suitable materials. Surfaces shall be cured by ponding, by continuous sprinkling, by continuously saturated burlap or cotton mats, or by continuously saturated plastic

coated burlap. Burlap and mats shall be clean and free from any contamination and shall be completely saturated before being placed on the concrete. The Contractor shall have an approved work system to ensure that moist curing is continuous 24 hours per day.

3.12.3 Membrane Forming Curing Compounds

Concrete may be cured with a nonpigmented curing compound containing a fugitive dye in lieu of moist curing. Membrane curing shall not be used on surfaces that are to receive any subsequent treatment depending on adhesion or bonding to the concrete, including surfaces to which a smooth finish is to be applied or other concrete to be bonded. However, a styrene acrylate or chlorinated rubber compound meeting ASTM C 309, Class B requirements, may be used for floors that are to receive adhesive applications of resilient flooring. The curing compound selected shall be compatible with any subsequent paint, roofing, waterproofing or flooring specified. Membrane curing compound shall not be used on surfaces that are maintained at curing temperatures with free steam. Curing compound shall be applied to formed surfaces immediately after the forms are removed and prior to any patching or other surface treatment except the cleaning of loose sand, mortar, and debris from the surface. All surfaces shall be thoroughly moistened with water. Curing compound shall be applied to slab surfaces as soon as the bleeding water has disappeared, with the tops of joints being temporarily sealed to prevent entry of the compound and to prevent moisture loss during the curing period. The curing compound shall be applied in a two-coat continuous operation by approved motorized power-spraying equipment operating at a minimum pressure of 75 psi, at a uniform coverage of not more than 400 square feet per gallon for each coat, and the second coat shall be applied perpendicular to the first coat. Concrete surfaces which have been subjected to rainfall within 3 hours after curing compound has been applied shall be resprayed by the method and at the coverage specified. Surfaces on which clear compound is used shall be shaded from direct rays of the sun for the first 3 days. Surfaces coated with curing compound shall be kept free of foot and vehicular traffic, and from other sources of abrasion and contamination during the curing period.

3.12.4 Cold Weather Curing and Protection

When the daily ambient low temperature is less than 32 degrees F the temperature of the concrete shall be maintained above 40 degrees F for the first seven days after placing. During the period of protection removal, the air temperature adjacent to the concrete surfaces shall be controlled so that concrete near the surface will not be subjected to a temperature differential of more than 25 degrees F as determined by suitable temperature measuring devices furnished by the Contractor, as required, and installed adjacent to the concrete surface and 2 inches inside the surface of the concrete. The installation of the thermometers shall be made by the Contractor as directed.

3.13 SETTING BASE PLATES AND BEARING PLATES

After being properly positioned, column base plates, bearing plates for beams and similar structural members, and machinery and equipment base plates shall be set to the proper line and elevation with nonshrink grout. The thickness of the grout shall be approximately 1/24 the width of the plate, but not less than 3/4 inch. Concrete and metal surfaces in contact with grout shall be clean and free of oil and grease, and concrete surfaces in contact with grout shall be damp and free of laitance when grout is placed.

3.13.1 Nonshrink Grout

Nonshrink grout shall be a ready-mixed material requiring only the addition of water. Water content shall be the minimum that will provide a flowable mixture and completely fill the space to be grouted without segregation, bleeding, or reduction of strength.

3.13.1.1 Mixing and Placing of Nonshrink Grout

Mixing and placing shall be in conformance with the material manufacturer's instructions and as specified therein. Ingredients shall be thoroughly dry-mixed before adding water. After adding water, the batch shall be mixed for 3 minutes. Batches shall be of size to allow continuous placement of freshly mixed grout. Grout not used within 30 minutes after mixing shall be discarded. The space between the top of the concrete or machinery-bearing surface and the plate shall be filled solid with the grout. Forms shall be of wood or other equally suitable material for completely retaining the grout on all sides and on top and shall be removed after the grout has set. The placed grout shall be carefully worked by rodding or other means to eliminate voids; however, overworking and breakdown of the initial set shall be avoided. Grout shall not be retempered or subjected to vibration from any source. Where clearances are unusually small, placement shall be under pressure with a grout pump. Temperature of the grout, and of surfaces receiving the grout, shall be maintained at 65 to 85 degrees F until after setting.

3.13.1.2 Treatment of Exposed Surfaces

Exposed surfaces shall have a smooth-dense finish and be left untreated. Curing shall comply with paragraph CURING AND PROTECTION.

3.14 TESTING AND INSPECTION FOR CONTRACTOR QUALITY CONTROL

The Contractor shall perform the inspection and tests described below and, based upon the results of these inspections and tests, shall take the action required and shall submit specified reports. When, in the opinion of the Contracting Officer, the concreting operation is out of control, concrete placement shall cease and the operation shall be corrected. The laboratory performing the tests shall be onsite and shall conform with ASTM C 1077. Materials may be subjected to check testing by the Government from samples obtained at the manufacturer, at transfer points, or at the project site. The Government will inspect the laboratory, equipment, and test procedures prior to start of concreting operations and at least once per 7 dsys thereafter for conformance with ASTM C 1077.

3.14.1 Grading and Corrective Action

3.14.1.1 Fine Aggregate

At least once during each shift when the concrete plant is operating, there shall be one sieve analysis and fineness modulus determination in accordance with ASTM C 136 and COE CRD-C 104 for the fine aggregate or for each fine aggregate if it is batched in more than one size or classification. The location at which samples are taken may be selected by the Contractor as the most advantageous for control. However, the Contractor is responsible for delivering fine aggregate to the mixer within specification limits. When the amount passing on any sieve is outside the specification limits, the fine aggregate shall be immediately resampled and

retested. If there is another failure on any sieve, the fact shall immediately reported to the Contracting Officer, concreting shall be stopped, and immediate steps taken to correct the grading.

3.14.1.2 Coarse Aggregate

At least once during each shift in which the concrete plant is operating, there shall be a sieve analysis in accordance with ASTM C 136 for each size of coarse aggregate. The location at which samples are taken may be selected by the Contractor as the most advantageous for production control. However, the Contractor shall be responsible for delivering the aggregate to the mixer within specification limits. A test record of samples of aggregate taken at the same locations shall show the results of the current test as well as the average results of the five most recent tests including the current test. The Contractor may adopt limits for control coarser than the specification limits for samples taken other than as delivered to the mixer to allow for degradation during handling. When the amount passing any sieve is outside the specification limits, the coarse aggregate shall be immediately resampled and retested. If the second sample fails on any sieve, that fact shall be reported to the Contracting Officer. Where two consecutive averages of 5 tests are outside specification limits, the operation shall be considered out of control and shall be reported to the Contracting Officer. Concreting shall be stopped and immediate steps shall be taken to correct the grading.

3.14.2 Quality of Aggregates

Thirty days prior to the start of concrete placement, the Contractor shall perform all tests for aggregate quality required by ASTM C 33. In addition, after the start of concrete placement, the Contractor shall perform tests for aggregate quality at least every three months, and when the source of aggregate or aggregate quality changes. Samples tested after the start of concrete placement shall be taken immediately prior to entering the concrete mixer.

3.14.3 Scales, Batching and Recording

The accuracy of the scales shall be checked by test weights prior to start of concrete operations and at least once every three months. Such tests shall also be made as directed whenever there are variations in properties of the fresh concrete that could result from batching errors. Once a week the accuracy of each batching and recording device shall be checked during a weighing operation by noting and recording the required weight, recorded weight, and the actual weight batched. At the same time, the Contractor shall test and ensure that the devices for dispensing admixtures are operating properly and accurately. When either the weighing accuracy or batching accuracy does not comply with specification requirements, the plant shall not be operated until necessary adjustments or repairs have been made. Discrepancies in recording accuracies shall be corrected immediately.

3.14.4 Batch-Plant Control

The measurement of concrete materials including cementitious materials, each size of aggregate, water, and admixtures shall be continuously controlled. The aggregate weights and amount of added water shall be adjusted as necessary to compensate for free moisture in the aggregates. The amount of air-entraining agent shall be adjusted to control air content within specified limits. A report shall be prepared indicating type and

source of cement used, type and source of pozzolan or slag used, amount and source of admixtures used, aggregate source, the required aggregate and water weights per cubic yard, amount of water as free moisture in each size of aggregate, and the batch aggregate and water weights per cubic yard for each class of concrete batched during each day's plant operation.

3.14.5 Concrete Mixture

a. Air Content Testing. Air content tests shall be made when test specimens are fabricated. In addition, at least two tests for air content shall be made on randomly selected batches of each separate concrete mixture produced during each 8-hour period of concrete production. Additional tests shall be made when excessive variation in workability is reported by the placing foreman or Government inspector. Tests shall be made in accordance with ASTM C 231. Test results shall be plotted on control charts which shall at all times be readily available to the Government and shall be submitted weekly. Copies of the current control charts shall be kept in the field by testing crews and results plotted as tests are made. When a single test result reaches either the upper or lower action limit, a second test shall immediately be made. The results of the two tests shall be averaged and this average used as the air content of the batch to plot on both the air content and the control chart for range, and for determining need for any remedial action. The result of each test, or average as noted in the previous sentence, shall be plotted on a separate control chart for each mixture on which an "average line" is set at the midpoint of the specified air content range from paragraph Air Entrainment. An upper warning limit and a lower warning limit line shall be set 1.0 percentage point above and below the average line, respectively. An upper action limit and a lower action limit line shall be set 1.5 percentage points above and below the average line, respectively. The range between each two consecutive tests shall be plotted on a secondary control chart for range where an upper warning limit is set at 2.0 percentage points and an upper action limit is set at 3.0 percentage points. Samples for air content may be taken at the mixer, however, the Contractor is responsible for delivering the concrete to the placement site at the stipulated air content. If the Contractor's materials or transportation methods cause air content loss between the mixer and the placement, correlation samples shall be taken at the placement site as required by the Contracting Officer, and the air content at the mixer controlled as directed.

b. Air Content Corrective Action. Whenever points on the control chart for percent air reach either warning limit, an adjustment shall immediately be made in the amount of air-entraining admixture batched. As soon as practical after each adjustment, another test shall be made to verify the result of the adjustment. Whenever a point on the secondary control chart for range reaches the warning limit, the admixture dispenser shall be recalibrated to ensure that it is operating accurately and with good reproducibility. Whenever a point on either control chart reaches an action limit line, the air content shall be considered out of control and the concreting operation shall immediately be halted until the air content is under control. Additional air content tests shall be made when concreting is restarted.

c. Slump Testing. In addition to slump tests which shall be made when test specimens are fabricated, at least four slump tests shall be made on randomly selected batches in accordance with ASTM C 143/C 143M for each separate concrete mixture produced during each 8-hour or less period of concrete production each day. Also, additional tests shall be made when excessive variation in workability is reported by the placing foreman or Government inspector. Test results shall be plotted on control charts which shall at all times be readily available to the Government and shall be submitted weekly. Copies of the current control charts shall be kept in the field by testing crews and results plotted as tests are made. When a single slump test reaches or goes beyond either the upper or lower action limit, a second test shall immediately be made. The results of the two tests shall be averaged and this average used as the slump of the batch to plot on both the control charts for slump and the chart for range, and for determining need for any remedial action. Limits shall be set on separate control charts for slump for each type of mixture. The upper warning limit shall be set at 1/2 inch below the maximum allowable slump specified in paragraph Slump in PART 1 for each type of concrete and an upper action limit line and lower action limit line shall be set at the maximum and minimum allowable slumps, respectively, as specified in the same paragraph. The range between each consecutive slump test for each type of mixture shall be plotted on a single control chart for range on which an upper action limit is set at 2 inches. Samples for slump shall be taken at the mixer. However, the Contractor is responsible for delivering the concrete to the placement site at the stipulated slump. If the Contractor's materials or transportation methods cause slump loss between the mixer and the placement, correlation samples shall be taken at the placement site as required by the Contracting Officer, and the slump at the mixer controlled as directed.

d. Slump Corrective Action. Whenever points on the control charts for slump reach the upper warning limit, an adjustment shall immediately be made in the batch weights of water and fine aggregate. The adjustments are to be made so that the total water content does not exceed that amount allowed by the maximum w/c ratio specified, based on aggregates which are in a saturated surface dry condition. When a single slump reaches the upper or lower action limit, no further concrete shall be delivered to the placing site until proper adjustments have been made. Immediately after each adjustment, another test shall be made to verify the correctness of the adjustment. Whenever two consecutive individual slump tests, made during a period when there was no adjustment of batch weights, produce a point on the control chart for range at or above the upper action limit, the concreting operation shall immediately be halted, and the Contractor shall take appropriate steps to bring the slump under control. Additional slump tests shall be made as directed.

e. Temperature. The temperature of the concrete shall be measured when compressive strength specimens are fabricated. Measurement shall be in accordance with ASTM C 1064/C 1064M. The temperature shall be reported along with the compressive strength data.

f. Strength Specimens. At least one set of test specimens shall be made, for compressive strength, on each different concrete mixture

placed during the day for each 500 cubic yards or portion thereof of that concrete mixture placed each day. Additional sets of test specimens shall be made, as directed by the Contracting Officer, when the mixture proportions are changed or when low strengths have been detected. A truly random (not haphazard) sampling plan shall be developed by the Contractor and approved by the Contracting Officer prior to the start of construction. The plan shall assure that sampling is done in a completely random and unbiased manner. A set of test specimens for concrete with a 28-day specified strength per paragraph Strength Requirements in PART 1 shall consist of four specimens, two to be tested at 7 days and two at 28 days. A set of test specimens for concrete with a 90-day strength per the same paragraph shall consist of six specimens, two tested at 7 days, two at 28 days, and two at 90 days. Test specimens shall be molded and cured in accordance with ASTM C 31/C 31M and tested in accordance with ASTM C 39/C 39M for test cylinders and ASTM C 78 for test beams. Results of all strength tests shall be reported immediately to the Contracting Officer. Quality control charts shall be kept for individual strength "tests", ("test" as defined in paragraph Strength Requirements in PART 1) moving average of last 3 "tests" for strength, and moving average for range for the last 3 "tests" for each mixture. The charts shall be similar to those found in ACI 214.3R.

3.14.6 Inspection Before Placing

Foundations, construction joints, forms, and embedded items shall be inspected by the Contractor in sufficient time prior to each concrete placement in order to certify to the Contracting Officer that they are ready to receive concrete. The results of each inspection shall be reported in writing.

3.14.7 Placing

The placing foreman shall supervise placing operations, shall determine that the correct quality of concrete or grout is placed in each location as specified and as directed by the Contracting Officer, and shall be responsible for measuring and recording concrete temperatures and ambient temperature hourly during placing operations, weather conditions, time of placement, volume placed, and method of placement. The placing foreman shall not permit batching and placing to begin until it has been verified that an adequate number of vibrators in working order and with competent operators are available. Placing shall not be continued if any pile of concrete is inadequately consolidated. If any batch of concrete fails to meet the temperature requirements, immediate steps shall be taken to improve temperature controls.

3.14.8 Vibrators

The frequency and amplitude of each vibrator shall be determined in accordance with COE CRD-C 521 prior to initial use and at least once a month when concrete is being placed. Additional tests shall be made as directed when a vibrator does not appear to be adequately consolidating the concrete. The frequency shall be determined while the vibrator is operating in concrete with the tachometer being held against the upper end of the vibrator head while almost submerged and just before the vibrator is withdrawn from the concrete. The amplitude shall be determined with the head vibrating in air. Two measurements shall be taken, one near the tip

and another near the upper end of the vibrator head, and these results averaged. The make, model, type, and size of the vibrator and frequency and amplitude results shall be reported in writing. Any vibrator not meeting the requirements of paragraph Consolidation, shall be immediately removed from service and repaired or replaced.

3.14.9 Curing Inspection

a. Moist Curing Inspections. At least once each shift, and not less than twice per day on both work and non-work days, an inspection shall be made of all areas subject to moist curing. The surface moisture condition shall be noted and recorded.

b. Moist Curing Corrective Action. When a daily inspection report lists an area of inadequate curing, immediate corrective action shall be taken, and the required curing period for those areas shall be extended by 1 day.

c. Membrane Curing Inspection. No curing compound shall be applied until the Contractor has verified that the compound is properly mixed and ready for spraying. At the end of each operation, the Contractor shall estimate the quantity of compound used by measurement of the container and the area of concrete surface covered, shall compute the rate of coverage in square feet per gallon, and shall note whether or not coverage is uniform.

d. Membrane Curing Corrective Action. When the coverage rate of the curing compound is less than that specified or when the coverage is not uniform, the entire surface shall be sprayed again.

e. Sheet Curing Inspection. At least once each shift and once per day on non-work days, an inspection shall be made of all areas being cured using impervious sheets. The condition of the covering and the tightness of the laps and tapes shall be noted and recorded.

f. Sheet Curing Corrective Action. When a daily inspection report lists any tears, holes, or laps or joints that are not completely closed, the tears and holes shall promptly be repaired or the sheets replaced, the joints closed, and the required curing period for those areas shall be extended by 1 day.

3.14.10 Cold-Weather Protection

At least once each shift and once per day on non-work days, an inspection shall be made of all areas subject to cold-weather protection. Any deficiencies shall be noted, corrected, and reported.

3.14.11 Mixer Uniformity

a. Stationary Mixers. Prior to the start of concrete placing and once every 6 months when concrete is being placed, or once for every 75,000 cubic yards of concrete placed, whichever results in the shortest time interval, uniformity of concrete mixing shall be determined in accordance with ASTM C 94/C 94M.

b. Truck Mixers. Prior to the start of concrete placing and at least once every 6 months when concrete is being placed, uniformity of concrete mixing shall be determined in accordance with ASTM C 94/C

94M. The truck mixers shall be selected randomly for testing. When satisfactory performance is found in one truck mixer, the performance of mixers of substantially the same design and condition of the blades may be regarded as satisfactory.

c. Mixer Uniformity Corrective Action. When a mixer fails to meet mixer uniformity requirements, either the mixing time shall be increased, batching sequence changed, batch size reduced, or adjustments shall be made to the mixer until compliance is achieved.

3.14.12 Reports

All results of tests or inspections conducted shall be reported informally as they are completed and in writing daily. A weekly report shall be prepared for the updating of control charts covering the entire period from the start of the construction season through the current week. During periods of cold-weather protection, reports of pertinent temperatures shall be made daily. These requirements do not relieve the Contractor of the obligation to report certain failures immediately as required in preceding paragraphs. Such reports of failures and the action taken shall be confirmed in writing in the routine reports. The Contracting Officer has the right to examine all contractor quality control records.

-- End of Section --

SECTION TABLE OF CONTENTS

DIVISION 04 - MASONRY

SECTION 04200

MASONRY

09/03

PART 1 GENERAL

1.1 REFERENCES
1.2 SUBMITTALS
1.3 SAMPLE MASONRY PANELS
1.3.1 Configuration
1.3.2 Composition
1.3.3 Construction Method
1.3.4 Usage
1.4 DELIVERY, HANDLING, AND STORAGE
1.4.1 Masonry Units
1.4.2 Reinforcement, Anchors, and Ties
1.4.3 Cementitious Materials, Sand and Aggregates
1.5 STRUCTURAL MASONRY
1.5.1 Special Inspection
1.5.2 Unit Strength Method
1.5.3 Seismic Requirement
1.6 QUALITY ASSURANCE
1.6.1 Testing
1.6.2 Spare Vibrator
1.6.3 Bracing and Scaffolding

PART 2 PRODUCTS

2.1 GENERAL REQUIREMENTS
2.2 CONCRETE MASONRY UNITS (CMU)
2.2.1 Aggregates
2.2.2 Kinds and Shapes
2.2.2.1 Architectural Units
2.2.3 Fire-Rated CMU
2.3 PRECAST CONCRETE ITEMS
2.3.1 Lintels
2.3.2 Sills and Copings
2.3.3 Splash Blocks
2.4 MORTAR FOR STRUCTURAL MASONRY
2.5 MASONRY MORTAR
2.5.1 Admixtures for Masonry Mortar
2.5.2 Colored Mortar
2.5.3 Hydrated Lime and Alternates
2.5.4 Cement
2.5.5 Sand and Water
2.6 WATER-REPELLANT ADMIXTURE
2.7 GROUT AND READY-MIXED GROUT
2.7.1 Admixtures for Grout
2.7.2 Grout Barriers
2.8 ANCHORS, TIES, AND BAR POSITIONERS
2.8.1 Wall Ties
2.8.2 Dovetail Anchors

2.8.3 Adjustable Anchors
2.8.4 Bar Positioners
2.9 JOINT REINFORCEMENT
2.10 REINFORCING STEEL BARS AND RODS
2.11 CONTROL JOINT KEYS
2.12 INSULATION
2.12.1 Rigid Board-Type Insulation
2.12.1.1 Insulation Thickness and Air Space
2.12.1.2 Aged R-Value
2.12.1.3 Recovered Material
2.12.2 Insulation Adhesive
2.13 EXPANSION-JOINT MATERIALS
2.14 FLASHING
2.15 WEEP HOLE VENTILATORS

PART 3 EXECUTION

3.1 PREPARATION
3.1.1 Hot Weather Installation
3.1.2 Cold Weather Installation
3.1.2.1 Protection
3.1.2.2 Completed Masonry and Masonry Not Being Worked On
3.1.3 Stains
3.1.4 Loads
3.1.5 Surfaces
3.2 LAYING MASONRY UNITS
3.2.1 Forms and Shores
3.2.2 Reinforced Concrete Masonry Units Walls
3.2.3 Concrete Masonry Units
3.2.4 Tolerances
3.2.5 Cutting and Fitting
3.2.6 Jointing
3.2.6.1 Flush Joints
3.2.6.2 Tooled Joints
3.2.6.3 Door and Window Frame Joints
3.2.7 Joint Widths
3.2.7.1 Concrete Masonry Units
3.2.7.2 Prefaced Concrete Masonry Units
3.2.8 Embedded Items
3.2.9 Unfinished Work
3.2.10 Masonry Wall Intersections
3.2.11 Partitions
3.3 ANCHORED VENEER CONSTRUCTION
3.4 WEEP HOLES
3.5 COMPOSITE WALLS
3.6 MORTAR
3.7 REINFORCING STEEL
3.7.1 Positioning Bars
3.7.2 Splices
3.8 JOINT REINFORCEMENT INSTALLATION
3.9 PLACING GROUT
3.9.1 Vertical Grout Barriers for Fully Grouted Walls
3.9.2 Horizontal Grout Barriers
3.9.3 Grout Holes and Cleanouts
3.9.3.1 Grout Holes
3.9.3.2 Cleanouts for Hollow Unit Masonry Construction
3.9.3.3 Cleanouts for Solid Unit Masonry Construction
3.9.4 Grouting Equipment
3.9.4.1 Grout Pumps

3.9.4.2 Vibrators
3.9.5 Grout Placement
3.9.5.1 Low-Lift Method
3.9.5.2 High-Lift Method
3.10 BOND BEAMS
3.11 CONTROL JOINTS
3.12 CONCRETE MASONRY VENEER JOINTS
3.13 SHELF ANGLES
3.14 LINTELS
3.14.1 Masonry Lintels
3.14.2 Precast Concrete and Steel Lintels
3.15 SILLS AND COPINGS
3.16 ANCHORAGE TO CONCRETE AND STRUCTURAL STEEL
3.16.1 Anchorage to Concrete
3.16.2 Anchorage to Structural Steel
3.17 INSULATION
3.18 SPLASH BLOCKS
3.19 POINTING AND CLEANING
3.19.1 Concrete Masonry Unit and
3.20 BEARING PLATES
3.21 PROTECTION
3.22 TEST REPORTS
3.22.1 Field Testing of Mortar
3.22.2 Field Testing of Grout
3.22.3 Prism Tests
3.23 SPECIAL INSPECTION AND TESTING FOR SEISMIC-RESISTING SYSTEMS

-- End of Section Table of Contents --

UFGS-04200 (September 2003)

SECTION 04200

MASONRY
09/03

PART 1 GENERAL

1.1 REFERENCES

The publications listed below form a part of this specification to the extent referenced. The publications are referred to within the text by the basic designation only.

ACI INTERNATIONAL (ACI)

ACI 530/530.1	(2000) Building Code Requirements for Masonry Structures
ACI 318M/318RM	(2002) Building Code Requirements for Structural Concrete and Commentary
ACI SP-66	(1994) ACI Detailing Manual

ASTM INTERNATIONAL (ASTM)

ASTM A 82	(2001) Steel Wire, Plain, for Concrete Reinforcement
ASTM A 153/A 153M	(2001a) Zinc Coating (Hot-Dip) on Iron and Steel Hardware
ASTM A 167	1999) Stainless and Heat-Resisting Chromium-Nickel Steel Plate, Sheet, and Strip
ASTM A 615/A 615M	(2001b) Deformed and Plain Billet-Steel Bars for Concrete Reinforcement
ASTM A 641/A 641M	(1998) Zinc-Coated (Galvanized) Carbon Steel Wire
ASTM B 370	(1998) Copper Sheet and Strip for Building Construction
ASTM C 90	(2002) Loadbearing Concrete Masonry Units
ASTM C 91	(2001) Masonry Cement
ASTM C 94/C 94M	(2000e2) Ready-Mixed Concrete
ASTM C 129	(2001) Nonloadbearing Concrete Masonry Units
ASTM C 140	(2002a) Sampling and Testing Concrete

	Masonry Units and Related Units
ASTM C 144	(2002) Aggregate for Masonry Mortar
ASTM C 150	(2002a) Portland Cement
ASTM C 207	(1991; R 1997) Hydrated Lime for Masonry Purposes
ASTM C 270	(2002) Mortar for Unit Masonry
ASTM C 476	(2002) Grout for Masonry
ASTM C 494/C 494M	(1999ae1) Chemical Admixtures for Concrete
ASTM C 578	(2001) Rigid, Cellular Polystyrene Thermal Insulation
ASTM C 641	(1998e1) Staining Materials in Lightweight Concrete Aggregates
ASTM C 744	(1999) Prefaced Concrete and Calcium Silicate Masonry Units
ASTM C 780	(2002) Preconstruction and Construction Evaluation of Mortars for Plain and Reinforced Unit Masonry
ASTM C 1019	(2002) Sampling and Testing Grout
ASTM C 1072	(2000a) Measurement of Masonry Flexural Bond Strength
ASTM C 1289	(2002) Faced Rigid Cellular Polyisocyanurate Thermal Insulation Board
ASTM D 2000	(2001) Rubber Products in Automotive Applications
ASTM D 2240	(2002a) Rubber Property - Durometer Hardness
ASTM D 2287	(1996; R 2001) Nonrigid Vinyl Chloride Polymer and Copolymer Molding and Extrusion Compounds
ASTM E 119	(2000a) Fire Tests of Building Construction and Materials
ASTM E 514	(2002) Water Penetration and Leakage Through Masonry

INTERNATIONAL CODE COUNCIL (ICC)

ICC IPC	(2000) International Plumbing Code

U.S. ARMY CORPS OF ENGINEERS (USACE)

TI 809-04	(1998) Seismic Design for Buildings

1.2 SUBMITTALS

Government approval is required for submittals with a "G" designation; submittals not having a "G" designation are for information only or as otherwise designated. When used, a designation following the "G" designation identifies the office that will review the submittal for the Government. The following shall be submitted in accordance with Section 01330 SUBMITTAL PROCEDURES:

SD-02 Shop Drawings

Structural Masonry; G, AE

Drawings including plans, elevations, and details of wall reinforcement; details of reinforcing bars at corners and wall intersections; offsets; tops, bottoms, and ends of walls; control and expansion joints; lintels; and wall openings. Bar splice locations shall be shown. Bent bars shall be identified on a bending diagram and shall be referenced and located on the drawings. Wall dimensions, bar clearances, and wall openings greater than one masonry unit in area shall be shown. No approval will be given to the shop drawings until the Contractor certifies that all openings, including those for mechanical and electrical service, are shown. If, during construction, additional masonry openings are required, the approved shop drawings shall be resubmitted with the additional openings shown along with the proposed changes. Location of these additional openings shall be clearly highlighted. The minimum scale for wall elevations shall be 1/4 inch per foot. Reinforcement bending details shall conform to the requirements of ACI SP-66.

SD-03 Product Data

Insulation
Flashing
Water-Repellant Admixture

Manufacturer's descriptive data.

Cold Weather Installation

Cold weather construction procedures.

SD-04 Samples

Concrete Masonry Units (CMU); G, RO

Color samples of three stretcher units and one unit for each type of special shape. Units shall show the full range of color and texture. Submit sample of colored mortar with applicable masonry unit.

SD-05 Design Data

Unit Strength Method

Calculations and certifications of masonry unit and mortar

strength.

SD-06 Test Reports

Field Testing of Mortar
Field Testing of Grout
Prism tests
Masonry Cement
Fire-rated CMU

Test reports from an approved independent laboratory. Test reports on a previously tested material shall be certified as the same as that proposed for use in this project.

Special Inspection

Copies of masonry inspector reports.

SD-07 Certificates

Concrete Masonry Units (CMU)
Control Joint Keys
Anchors, Ties, and Bar Positioners
Expansion-Joint Materials
Joint Reinforcement
Reinforcing Steel Bars and Rods
Masonry Cement
Mortar Coloring
Insulation
Precast Concrete Items
Admixtures for Masonry Mortar
Admixtures for Grout

Certificates of compliance stating that the materials meet the specified requirements.

Insulation

Certificate attesting that the polyurethane or polyisocyanurate insulation furnished for the project contains recovered material, and showing an estimated percent of such recovered material.

SD-08 Manufacturer's Instructions

Masonry Cement

When masonry cement is used, submit the manufacturer's printed instructions on proportions of water and aggregates and on mixing to obtain the type of mortar required.

1.3 SAMPLE MASONRY PANELS

After material samples are approved and prior to starting masonry work, a portable panel of clay or shale brick and sample masonry panels shall be constructed for each type and color of masonry required. At least 48 hours prior to constructing the sample panel or panels, the Contractor shall submit written notification to the Contracting Officer's Representative. Sample panels shall not be built in, or as part of the structure, but shall

be located where directed.

1.3.1 Configuration

Panels shall be L-shaped or otherwise configured to represent all of the wall elements. Panels shall be of the size necessary to demonstrate the acceptable level of workmanship for each type of masonry represented on the project. The minimum size of a straight panel or a leg of an L-shaped panel shall be 8 feet long by 6 feet high.

1.3.2 Composition

Panels shall show full color range, texture, and bond pattern of the masonry work. The Contractor's method for mortar joint tooling; grouting of reinforced vertical cores, collar joints, bond beams, and lintels; positioning, securing, and lapping of reinforcing steel; positioning and lapping of joint reinforcement (including prefabricated corners); and cleaning of masonry work shall be demonstrated during the construction of the panels. Installation or application procedures for anchors, wall ties, CMU control joints, insulation, flashing, shall be shown in the sample panels. The panels shall contain a masonry bonded corner that includes a bond beam corner. Panels shall show installation of electrical boxes and conduit. Panels that represent reinforced masonry shall contain a 2 by 2 foot opening placed at least 2 feet above the panel base and 2 feet away from all free edges, corners, and control joints. Required reinforcing shall be provided around this opening as well as at wall corners and control joints.

1.3.3 Construction Method

Where anchored veneer walls are required, the Contractor shall demonstrate and receive approval for the method of construction; i.e., either bring up the two wythes together or separately, with the insulation and appropriate ties placed within the specified tolerances across the cavity. Temporary provisions shall be demonstrated to preclude mortar or grout droppings in the cavity and to provide a clear open air space of the dimensions shown on the drawings. Where masonry is to be grouted, the Contractor shall demonstrate and receive approval on the method that will be used to bring up the masonry wythes; support the reinforcing bars; and grout cells, bond beams, lintels, and collar joints using the requirements specified herein. If sealer is specified to be applied to the masonry units, sealer shall be applied to the sample panels. Panels shall be built on a properly designed concrete foundation.

1.3.4 Usage

The completed panels shall be used as the standard of workmanship for the type of masonry represented. Masonry work shall not commence until the sample panel for that type of masonry construction has been completed and approved. Panels shall be protected from the weather and construction operations until the masonry work has been completed and approved. After completion of the work, the sample panels, including all foundation concrete, shall become the property of the Contractor and shall be removed from the construction site.

1.4 DELIVERY, HANDLING, AND STORAGE

Materials shall be delivered, handled, stored, and protected to avoid chipping, breakage, and contact with soil or contaminating material.

1.4.1 Masonry Units

Concrete masonry units shall be covered or protected from inclement weather. Store Type II, concrete masonry units at the site for a minimum of 28 days for air cured units, 10 days for atmospheric steam or water cured units, and 3 days for units cured with steam at a pressure of 120 to 150 psi and at a temperature of 350 to 365 degrees F for at least 5 hours. Protect moisture controlled units (Type I) from rain and ground water. Prefabricated lintels shall be marked on top sides to show either the lintel schedule number or the number and size of top and bottom bars.

1.4.2 Reinforcement, Anchors, and Ties

Steel reinforcing bars, coated anchors, ties, and joint reinforcement shall be stored above the ground. Steel reinforcing bars and uncoated ties shall be free of loose mill scale and rust.

1.4.3 Cementitious Materials, Sand and Aggregates

Cementitious and other packaged materials shall be delivered in unopened containers, plainly marked and labeled with manufacturers' names and brands. Cementitious material shall be stored in dry, weathertight enclosures or be completely covered. Cement shall be handled in a manner that will prevent the inclusion of foreign materials and damage by water or dampness. Sand and aggregates shall be stored in a manner to prevent contamination or segregation.

1.5 STRUCTURAL MASONRY

1.5.1 Special Inspection

A qualified masonry inspector approved by the Contracting Officer shall perform inspection of the masonry work. Minimum qualifications for the masonry inspector shall be 5 years of reinforced masonry inspection experience or acceptance by a State, municipality, or other governmental body having a program of examining and certifying inspectors for reinforced masonry construction. The masonry inspector shall be present during preparation of masonry prisms, sampling and placing of masonry units, placement of reinforcement (including placement of dowels in footings and foundation walls), inspection of grout space, immediately prior to closing of cleanouts, and during grouting operations. The masonry inspector shall assure Contractor compliance with the drawings and specifications. The masonry inspector shall keep a complete record of all inspections and shall submit daily written reports to the Quality Control Supervisory Representative reporting the quality of masonry construction.

1.5.2 Unit Strength Method

Compute compressive strength of masonry system "Unit Strength Method," ACI 530/530.1. Submit calculations and certifications of unit and mortar strength.

1.5.3 Seismic Requirement

In addition to design requirements of ICC IPC, the Contractor shall provide additional seismic reinforcement in accordance with TI 809-04. The total minimum reinforcing percentage for structural walls shall be 0.20 percent and non-structural walls shall be 0.15 percent. The maximum spacing of

reinforcing bars shall be as follows:

Wall Type	Vertical	Horizontal
Structural	24 inches	48 inches
Non-structural	48 inches	80 inches

Bond beams are required at the top of footings, at the bottom and top of openings at roof and floor levels, and at the top of parapet walls.

1.6 QUALITY ASSURANCE

1.6.1 Testing

Masonry strength shall be determined in accordance with ACI 530/530.1; submit test reports on three prisms as specified in ACI 530/530.1. The cost of testing shall be paid by the Contractor.

1.6.2 Spare Vibrator

Maintain at least one spare vibrator on site at all times.

1.6.3 Bracing and Scaffolding

Provide bracing and scaffolding necessary for masonry work. Design bracing to resist wind pressure as required by local code.

PART 2 PRODUCTS

2.1 GENERAL REQUIREMENTS

The source of materials which will affect the appearance of the finished work shall not be changed after the work has started except with Contracting Officer's approval.

2.2 CONCRETE MASONRY UNITS (CMU)

Cement shall have a low alkali content and be of one brand. Units shall be of modular dimensions and air, water, or steam cured. Exposed surfaces of units shall be smooth and of uniform texture. Exterior concrete masonry units shall have water-repellant admixture added during manufacture.

a. Hollow Load-Bearing Units: ASTM C 90, Type I or II, made with lightweight or normal weight aggregate. Provide load-bearing units for exterior walls, foundation walls, load-bearing walls, and shear walls.

b. Hollow Non-Load-Bearing Units: ASTM C 129, Type I or II, made with lightweight or normal weight aggregate. Load-bearing units may be provided in lieu of non-load-bearing units.

c. Solid Load-Bearing Units: ASTM C 90, Type I or II, lightweight or normal weight units. Provide solid units for masonry bearing under structural framing members.

2.2.1 Aggregates

Lightweight aggregates and blends of lightweight and heavier aggregates in

proportions used in producing the units, shall comply with the following requirements when tested for stain-producing iron compounds in accordance with ASTM C 641: by visual classification method, the iron stain deposited on the filter paper shall not exceed the "light stain" classification.

2.2.2 Kinds and Shapes

Units shall be modular in size and shall include closer, jamb, header, lintel, and bond beam units and special shapes and sizes to complete the work as indicated. In exposed interior masonry surfaces, units having a bullnose shall be used for vertical external corners except at door, window, and louver jambs. Radius of the bullnose shall be 1 inch. Units used in exposed masonry surfaces in any one building shall have a uniform fine to medium texture and a uniform color.

2.2.2.1 Architectural Units

Units shall have patterned face shell. Face shell pattern shall be vertical scored, split-face, or ground (smooth face) as indicated/. Units shall be integrally colored during manufacture. Color shall match Adams Ivory unless indicated otherwise on drawings
. Patterned face shell shall be properly aligned in the completed wall.

2.2.3 Fire-Rated CMU

Concrete masonry units used in fire-rated construction shown on the drawings shall be of minimum equivalent thickness for the fire rating indicated and the corresponding type of aggregates indicated in TABLE I. Units containing more than one of the aggregates listed in TABLE I will be rated on the aggregate requiring the greater minimum equivalent thickness to produce the required fire rating. Construction shall conform to ASTM E 119.

TABLE I

FIRE-RATED CONCRETE MASONRY UNITS

See note (a) below

Aggregate Type	Minimum equivalent thickness inches for fire rating of: 4 hours	3 hours	2 hours
Pumice	4.7	4.0	3.0
Expanded slag	5.0	4.2	3.3
Expanded clay, shale, or slate	5.7	4.8	3.7
Limestone, scoria, cinders or unexpanded slag	5.9	5.0	4.0
Calcareous gravel	6.2	5.3	4.2
Siliceous gravel	6.7	5.7	4.5

(a) Minimum equivalent thickness shall equal net volume as determined in conformance with ASTM C 140 divided by the product of the actual length and height of the face shell of the unit in inches. Where walls are to receive plaster or be faced with brick, or otherwise form an assembly; the thickness of plaster or brick or other material in the assembly will be included in determining the equivalent thickness.

2.3 PRECAST CONCRETE ITEMS

Trim, lintels, copings, splashblocks and door sills shall be factory-made units from a plant regularly engaged in producing precast concrete units. Unless otherwise indicated, concrete shall be 4,000 psi minimum conforming to Section 03300A CAST-IN-PLACE STRUCTURAL CONCRETE using 1/2 inch to No. 4 nominal-size coarse aggregate, and minimum reinforcement shall be the reinforcement required for handling of the units. Clearance of 3/4 inch shall be maintained between reinforcement and faces of units. Unless precast-concrete items have been subjected during manufacture to saturated-steam pressure of at least 120 psi for at least 5 hours, the items, after casting, shall be either damp-cured for 24 hours or steam-cured and shall then be aged under cover for 28 days or longer. Cast-concrete members weighing over 80 pounds shall have built-in loops of galvanized wire or other approved provisions for lifting and anchoring. Units shall have beds and joints at right angles to the face, with sharp true arises and shall be cast with drip grooves on the underside where units overhang walls. Exposed-to-view surfaces shall be free of surface voids, spalls, cracks, and chipped or broken edges. Precast units exposed-to-view shall be of uniform appearance and color. Unless otherwise specified, units shall have a smooth dense finish. Prior to use, each item shall be wetted and inspected for crazing. Items showing evidence of dusting, spalling, crazing, or having surfaces treated with a protective coating will be rejected.

2.3.1 Lintels

Precast lintels, unless otherwise shown, shall be of a thickness equal to the wall and reinforced with two No. 4 bars for the full length. Top of lintels shall be labeled "TOP" or otherwise identified and each lintel shall be clearly marked to show location in the structure. In reinforced masonry, lintels shall conform to ACI 318M/318RM for flexural and shear strength and shall have at least 8 inches bearing at each end. Concrete shall have a minimum 28 day compressive strength of 4000 psi using 1/2 inch to No. 4 nominal-size coarse aggregate. Reinforcement shall conform to ASTM A 615/A 615M Grade 60. Limit lintel deflection due to dead plus live load to L/600 or 0.3 inches. Provide top and bottom bars for lintels over 36 inches in length.

2.3.2 Sills and Copings

Sills and copings shall be cast with washes. Sills for windows having mullions shall be cast in sections with head joints at mullions and a 1/4 inch allowance for mortar joints. The ends of sills, except a 3/4 inch wide margin at exposed surfaces, shall be roughened for bond. Treads of door sills shall have rounded nosings. Reinforce sills with not less than two No. 4 bars.

2.3.3 Splash Blocks

Splash blocks shall be as detailed. Reinforcement shall be the

manufacturer's standard.

2.4 MORTAR FOR STRUCTURAL MASONRY

ASTM C 270, Type M and N. Strength (f'm) as indicated. Test in accordance with ASTM C 780. Use Type II or III portland cement. Use Masonry cement. Do not use admixtures containing chlorides. When structural reinforcement is incorporated, maximum air-content shall be 12 percent in cement-lime mortar and 18 percent in masonry cement mortar.

2.5 MASONRY MORTAR

Type M mortar shall conform to ASTM C 270 and shall be used for foundation walls. Mortar Type S shall conform to the proportion specification of ASTM C 270 except Type S cement-lime mortar proportions shall be 1 part cement, 1/2 part lime and 4-1/2 parts aggregate. Type N mortar shall be used for non-load-bearing, non-shear-wall interior masonry; and Type S for remaining masonry work; except where higher compressive strength is indicated on structural drawings. When masonry cement ASTM C 91 is used the maximum air content shall be limited to 12 percent and performance equal to cement-lime mortar shall be verified. Verification of masonry cement performance shall be based on ASTM C 780 and ASTM C 1072. Pointing mortar in showers and kitchens shall contain ammonium stearate, or aluminum tri-stearate, or calcium stearate in an amount equal to 3 percent by weight of cement used. Cement shall have a low alkali content and be of one brand. Aggregates shall be from one source.

2.5.1 Admixtures for Masonry Mortar

In cold weather, a non-chloride based accelerating admixture may be used subject to approval. Accelerating admixture shall be non-corrosive, shall contain less than 0.2 percent chlorides, and shall conform to ASTM C 494/C 494M, Type C.

2.5.2 Colored Mortar

Mortar coloring shall be added to the mortar used for exposed masonry veneer surfaces to produce a uniform color matching indicated. Quantity of pigment to cementitious content of the masonry cement shall not exceed 5 by weight; carbon black shall not exceed 1 percent by weight. Quantity of pigment to cementitious content of cement-lime mix shall not exceed 10 percent by weight, carbon black no more than 2 percent by weight. Mortar coloring shall be chemically inert, of finely ground limeproof pigment, and furnished in accurately pre-measured and packaged units that can be added to a measured amount of cement. Compressive strength of colored mortar shall equal that of uncolored mortar in similar uses.

2.5.3 Hydrated Lime and Alternates

Hydrated lime shall conform to ASTM C 207, Type S. Lime alternates which have a current ICBO, ICBO UBC, Evaluation Report number whose findings state it may be used as an alternate to lime for Type M, S, N, and O mortars will be deemed acceptable provided the user follows the manufacturer's proportions and mixing instructions as set forth in ICBO report.

2.5.4 Cement

Portland cement shall conform to ASTM C 150, Type I, II, or III, . Masonry

cement shall conform to ASTM C 91, Type S or M. Containers shall bear complete instructions for proportioning and mixing to obtain the required types of mortar.

2.5.5 Sand and Water

Sand shall conform to ASTM C 144. Water shall be clean, potable, and free from substances which could adversely affect the mortar.

2.6 WATER-REPELLANT ADMIXTURE

Polymeric type formulated to reduce porosity and water transmission. Construct panels of masonry units conforming to ASTM C 744 and mortar which contain the water-repellant admixture. When tested in accordance with ASTM C 1072, such panels shall have flexural strength not less than that specified or indicated. When tested in accordance with ASTM E 514, panels shall exhibit no water visible on back of test panel and no leaks through the panel after 24 hours, and not more than 25 percent of wall area shall be damp after 72 hours.

2.7 GROUT AND READY-MIXED GROUT

Grout shall conform to ASTM C 476, fine or coarse as required for space being grouted. Cement used in grout shall have a low alkali content. Grout slump shall be between 8 and 10 inches. Minimum grout strength shall be 2000 psi in 28 days, as tested by ASTM C 1019. Grout shall be used subject to the limitations of Table III. Proportions shall not be changed and materials with different physical or chemical characteristics shall not be used in grout for the work unless additional evidence is furnished that the grout meets the specified requirements. Ready-Mixed grout shall conform to ASTM C 94/C 94M.

2.7.1 Admixtures for Grout

In cold weather, a non-chloride based accelerating admixture may be used subject to approval; accelerating admixture shall be non-corrosive, shall contain less than 0.2 percent chlorides, and shall conform to ASTM C 494/C 494M, Type C. In general, air-entrainment, anti-freeze or chloride admixtures shall not be used except as approved by the Contracting Officer.

2.7.2 Grout Barriers

Grout barriers for vertical cores shall consist of fine mesh wire, fiberglass, or expanded metal.

2.8 ANCHORS, TIES, AND BAR POSITIONERS

Anchors and ties shall be fabricated without drips or crimps and shall be zinc-coated in accordance with ASTM A 153/A 153M, Class B-2. Steel wire used for anchors and ties shall be fabricated from steel wire conforming to ASTM A 82. Wire ties or anchors in exterior walls shall conform to ASTM A 641/A 641M. Joint reinforcement in interior walls, and in exterior or interior walls exposed to moist environment shall conform to ASTM A 641/A 641M; coordinate with paragraph JOINT REINFORCEMENT below. Anchors and ties shall be sized to provide a minimum of 5/8 inch mortar cover from either face.

2.8.1 Wall Ties

Wall ties shall be rectangular-shaped or Z-shaped fabricated of 3/16 inch diameter zinc-coated steel wire. Rectangular wall ties shall be no less than 4 inches wide. Wall ties may also be of a continuous type conforming to paragraph JOINT REINFORCEMENT. Adjustable type wall ties, if approved for use, shall consist of two essentially U-shaped elements fabricated of 3/16 inch diameter zinc-coated steel wire. Adjustable ties shall be of the double pintle to eye type and shall allow a maximum of 1/2 inch eccentricity between each element of the tie. Play between pintle and eye opening shall be not more than 1/16 inch. The pintle and eye elements shall be formed so that both can be in the same plane.

2.8.2 Dovetail Anchors

Dovetail anchors shall be of the flexible wire type, 3/16 inch diameter zinc-coated steel wire, triangular shaped, and attached to a 12 gauge or heavier steel dovetail section. These anchors shall be used for anchorage of veneer wythes or composite-wall facings extending over the face of concrete columns, beams, or walls. Cells within vertical planes of these anchors shall be filled solid with grout for full height of walls or partitions, or solid units may be used. Dovetail slots are specified in Section 03300A CAST-IN-PLACE STRUCTURAL CONCRETE.

2.8.3 Adjustable Anchors

Adjustable anchors shall be 3/16 inch diameter steel wire, triangular-shaped. Anchors attached to steel shall be 5/16 inch diameter steel bars placed to provide 1/16 inch play between flexible anchors and structural steel members. Spacers shall be welded to rods and columns. Equivalent welded-on steel anchor rods or shapes standard with the flexible-anchor manufacturer may be furnished when approved. Welds shall be cleaned and given one coat of zinc-rich touch up paint.

2.8.4 Bar Positioners

Bar positioners, used to prevent displacement of reinforcing bars during the course of construction, shall be factory fabricated from 9 gauge steel wire or equivalent, and coated with a hot-dip galvanized finish. Not more than one wire shall cross the cell.

2.9 JOINT REINFORCEMENT

Joint reinforcement shall be factory fabricated from steel wire conforming to ASTM A 82, welded construction. Tack welding will not be acceptable in reinforcement used for wall ties. Wire shall have zinc coating conforming to ASTM A 153/A 153M, Class B-2. All wires shall be a minimum of 9 gauge. Reinforcement shall be ladder type design, having one longitudinal wire in the mortar bed of each face shell for hollow units and one wire for solid units. Joint reinforcement shall be placed a minimum of 5/8 inch cover from either face. The distance between crosswires shall not exceed 16 inches. Joint reinforcement for straight runs shall be furnished in flat sections not less than 10 feet long. Joint reinforcement shall be provided with factory formed corners and intersections. If approved for use, joint reinforcement may be furnished with adjustable wall tie features.

2.10 REINFORCING STEEL BARS AND RODS

Reinforcing steel bars and rods shall conform to ASTM A 615/A 615M, Grade

60.

2.11 CONTROL JOINT KEYS

Control joint keys shall be a factory fabricated solid section of natural or synthetic rubber (or combination thereof) conforming to ASTM D 2000or polyvinyl chloride conforming to ASTM D 2287. The material shall be resistant to oils and solvents. The control joint key shall be provided with a solid shear section not less than 5/8 inchthick and 3/8 inch thick flanges, with a tolerance of plus or minus 1/16 inch. The control joint key shall fit neatly, but without forcing, in masonry unit jamb sash grooves. The control joint key shall be flexible at a temperature of minus 30 degrees F after five hours exposure, and shall have a durometer hardness of not less than 70 when tested in accordance with ASTM D 2240.

2.12 INSULATION

2.12.1 Rigid Board-Type Insulation

Rigid board-type insulation shall be extruded polystyrene, polyurethane, or polyisocyanurate. Polystyrene shall conform to ASTM C 578. Polyisocyanurate shall conform to ASTM C 1289, Type I, Class 1 or 2, faced with aluminum foil on both sides of the foam. The insulation shall be a standard product and shall be marked with not less than the manufacturer's trademark or name, the specification number, the permeance and R-values.

2.12.1.1 Insulation Thickness and Air Space

The cavity space shall allow for a maximum insulation thickness of 2 inches, and a minimum air space of 3/4 inch.

2.12.1.2 Aged R-Value

The insulation shall provide a minimum aged R-value of as indicatedfor the overall thickness. The aged R-value shall be determined at 75 degrees F in accordance with the appropriate referenced specification. The stated R-value of the insulation shall be certified by an independent testing laboratory or certified by an independent Registered Professional Engineer if tests are conducted in the manufacturer's laboratory.

2.12.1.3 Recovered Material

Contractor shall comply with EPA requirements in accordance with Section 01670 RECYCLED / RECOVERED MATERIALS. The polyurethane or polyisocyanurate foam shall have a minimum recovered material content of 20 percent by weight of the core material.

2.12.2 Insulation Adhesive

Insulation adhesive shall be specifically prepared to adhere the insulation to the masonry and, where applicable, to the thru-wall flashing. The adhesive shall not deleteriously affect the insulation, and shall have a record of satisfactory and proven performance for the conditions under which to be used.

2.13 EXPANSION-JOINT MATERIALS

Backer rod and sealant shall be adequate to accommodate joint compression equal to 50 percent of the width of the joint. The backer rod shall be

compressible rod stock of polyethylene foam, polyurethane foam, butyl rubber foam, or other flexible, nonabsorptive material as recommended by the sealant manufacturer. Sealant shall conform to Section 07900AJOINT SEALING.

2.14 FLASHING

Flashing shall be as specified in Section 07600 FLASHING AND SHEETMETAL. Provide one of the following types except that flashing indicated to terminate in reglets shall be metal or coated-metal flashing and except that the material shall be one which is not adversely affected by dampproofing material.

a. Coated-Copper Flashing: 7 ounce, electrolytic copper sheet, uniformly coated on both sides with acidproof, alkaliproof, elastic bituminous compound. Factory apply coating to a weight of not less than 6 ounces per square foot (approximately 3 ounces per square foot on each side).

b. Copper or Stainless Steel Flashing: Copper, ASTM B 370, minimum 16 ounce weight; stainless steel, ASTM A 167, Type 301, 302, 304, or 316, 0.015 inch thick, No. 2D finish. Provide with factory-fabricated deformations that mechanically bond flashing against horizontal movement in all directions. Deformations shall consist of dimples, diagonal corrugations, or a combination of dimples and transverse corrugations.

2.15 WEEP HOLE VENTILATORS

Weephole ventilators shall be prefabricated aluminum, plastic or wood blocking sized to form the proper size opening in head joints. Provide aluminum and plastic inserts with grill or screen-type openings designed to allow the passage of moisture from cavities and to prevent the entrance or insects. Ventilators shall be sized to match modular construction with a standard 3/8 inch mortar joint.

PART 3 EXECUTION

3.1 PREPARATION

Prior to start of work, masonry inspector shall verify the applicable conditions as set forth in ACI 530/530.1, inspection. The Contracting Officer will serve as inspector or will select a masonry inspector.

3.1.1 Hot Weather Installation

The following precautions shall be taken if masonry is erected when the ambient air temperature is more than 99 degrees F in the shade and the relative humidity is less than 50 percent or the ambient air temperature exceeds 90 degrees F and the wind velocity is more than 8 mph. All masonry materials shall be shaded from direct sunlight; mortar beds shall be spread no more than 4 feet ahead of masonry; masonry units shall be set within one minute of spreading mortar; and after erection, masonry shall be protected from direct exposure to wind and sun for 48 hours.

3.1.2 Cold Weather Installation

Before erecting masonry when ambient temperature or mean daily air temperature falls below 40 degrees F or temperature of masonry units is

below 40 degrees F, a written statement of proposed cold weather construction procedures shall be submitted for approval. The following precautions shall be taken during all cold weather erection.

3.1.2.1 Protection

Ice or snow formed on the masonry bed shall be thawed by the application of heat. Heat shall be applied carefully until the top surface of the masonry is dry to the touch. Sections of masonry deemed frozen and damaged shall be removed before continuing construction of those sections.

a. Air Temperature 40 to 32 Degrees F. Sand or mixing water shall be heated to produce mortar temperatures between 40 and 120 degrees F.

b. Air Temperature 32 to 25 Degrees F. Sand and mixing water shall be heated to produce mortar temperatures between 40 and 120 degrees F. Temperature of mortar on boards shall be maintained above freezing.

c. Air Temperature 25 to 20 Degrees F. Sand and mixing water shall be heated to provide mortar temperatures between 40 and 120 degrees F. Temperature of mortar on boards shall be maintained above freezing. Sources of heat shall be used on both sides of walls under construction. Windbreaks shall be employed when wind is in excess of 15 mph.

d. Air Temperature 20 Degrees F and below. Sand and mixing water shall be heated to provide mortar temperatures between 40 and 120 degrees F. Enclosure and auxiliary heat shall be provided to maintain air temperature above 32 degrees F. Temperature of units when laid shall not be less than 20 degrees F.

3.1.2.2 Completed Masonry and Masonry Not Being Worked On

a. Mean daily air temperature 40 to 32 degrees F. Masonry shall be protected from rain or snow for 24 hours by covering with weather-resistive membrane.

b. Mean daily air temperature 32 to 25 degrees F. Masonry shall be completely covered with weather-resistant membrane for 24 hours.

c. Mean Daily Air Temperature 25 to 20 degrees F. Masonry shall be completely covered with insulating blankets or equally protected for 24 hours.

d. Mean Daily Temperature 20 degrees F and Below. Masonry temperature shall be maintained above 32 degrees F for 24 hours by enclosure and supplementary heat, by electric heating blankets, infrared heat lamps, or other approved methods.

3.1.3 Stains

Protect exposed surfaces from mortar and other stains. When mortar joints are tooled, remove mortar from exposed surfaces with fiber brushes and wooden paddles. Protect base of walls from splash stains by covering adjacent ground with sand, sawdust, or polyethylene.

3.1.4 Loads

Do not apply uniform loads for at least 12 hours or concentrated loads for at least 72 hours after masonry is constructed. Provide temporary bracing as required.

3.1.5 Surfaces

Surfaces on which masonry is to be placed shall be cleaned of laitance, dust, dirt, oil, organic matter, or other foreign materials and shall be slightly roughened to provide a surface texture with a depth of at least 1/8 inch. Sandblasting shall be used, if necessary, to remove laitance from pores and to expose the aggregate.

3.2 LAYING MASONRY UNITS

Coordinate masonry work with the work of other trades to accommodate built-in items and to avoid cutting and patching. Masonry units shall be laid in the indicated bond pattern. Facing courses shall be level with back-up courses, unless the use of adjustable ties has been approved in which case the tolerances shall be plus or minus 1/2 inch. Each unit shall be adjusted to its final position while mortar is still soft and plastic. Units that have been disturbed after the mortar has stiffened shall be removed, cleaned, and relaid with fresh mortar. Air spaces, cavities, chases, expansion joints, and spaces to be grouted shall be kept free from mortar and other debris. Units used in exposed masonry surfaces shall be selected from those having the least amount of chipped edges or other imperfections detracting from the appearance of the finished work. Vertical joints shall be kept plumb. Units being laid and surfaces to receive units shall be free of water film and frost. Solid units shall be laid in a nonfurrowed full bed of mortar. Mortar for veneer wythes shall be beveled and sloped toward the center of the wythe from the cavity side. Units shall be shoved into place so that the vertical joints are tight. Vertical joints of brick and the vertical face shells of concrete masonry units, except where indicated at control, expansion, and isolation joints, shall be completely filled with mortar. Mortar will be permitted to protrude up to 1/2 inch into the space or cells to be grouted. Means shall be provided to prevent mortar from dropping into the space below. In double wythe construction, the inner wythe may be brought up not more than 16 inches ahead of the outer wythe. Collar joints shall be filled with mortar or grout during the laying of the facing wythe, and filling shall not lag the laying of the facing wythe by more than 8 inches.

3.2.1 Forms and Shores

Provide bracing and scaffolding as required. Design bracing to resist wind pressure as required by local codes. Forms and shores shall be sufficiently rigid to prevent deflections which may result in cracking or other damage to supported masonry and sufficiently tight to prevent leakage of mortar and grout. Supporting forms and shores shall not be removed in less than 10 days.

3.2.2 Reinforced Concrete Masonry Units Walls

Where vertical reinforcement occurs, fill cores solid with grout. Lay units in such a manner as to preserve the unobstructed vertical continuity of cores to be filled. Embed the adjacent webs in mortar to prevent leakage of grout. Remove mortar fins protruding from joints before placing grout. Minimum clear dimensions of vertical cores shall be 2 by 3 inches.

Position reinforcing accurately as indicated before placing grout. As masonry work progresses, secure vertical reinforcing in place at vertical intervals not to exceed 160 bar diameters. Use puddling rod or vibrator to consolidate the grout. Minimum clear distance between masonry and vertical reinforcement shall be not less than 1/2 inch. Unless indicated or specified otherwise, form splices by lapping bars not less than 40 bar diameters and wire tying them together.

3.2.3 Concrete Masonry Units

Units in piers, pilasters, columns, starting courses on footings, solid foundation walls, lintels, and beams, and where cells are to be filled with grout shall be full bedded in mortar under both face shells and webs. Other units shall be full bedded under both face shells. Head joints shall be filled solidly with mortar for a distance in from the face of the unit not less than the thickness of the face shell. Foundation walls below grade shall be grouted solid. Jamb units shall be of the shapes and sizes to conform with wall units. Solid units may be incorporated in the masonry work where necessary to fill out at corners, gable slopes, and elsewhere as approved. Double walls shall be stiffened at wall-mounted plumbing fixtures by use of strap anchors, two above each fixture and two below each fixture, located to avoid pipe runs, and extending from center to center of the double wall. Walls and partitions shall be adequately reinforced for support of wall-hung plumbing fixtures when chair carriers are not specified.

3.2.4 Tolerances

Masonry shall be laid plumb, true to line, with courses level. Bond pattern shall be kept plumb throughout. Corners shall be square unless noted otherwise. Except for walls constructed of prefaced concrete masonry units, masonry shall be laid within the following tolerances (plus or minus unless otherwise noted):

TABLE II

TOLERANCES

Variation from the plumb in the lines and surfaces of columns, walls and arises	
In adjacent masonry units	1/8 inch
In 10 feet	1/4 inch
In 20 feet	3/8 inch
In 40 feet or more	1/2 inch
Variations from the plumb for external corners, expansion joints, and other conspicuous lines	
In 20 feet	1/4 inch
In 40 feet or more	1/2 inch
Variations from the level for exposed lintels, sills, parapets, horizontal grooves, and other conspicuous lines	

TOLERANCES

In 20 feet	1/4 inch
In 40 feet or more	1/2 inch

Variation from level for bed joints and top surfaces of bearing walls

In 10 feet	1/4 inch
In 40 feet or more	1/2 inch

Variations from horizontal lines

In 10 feet	1/4 inch
In 20 feet	3/8 inch
In 40 feet or more	1/2 inch

Variations in cross sectional dimensions of columns and in thickness of walls

Minus	1/4 inch
Plus	1/2 inch

3.2.5 Cutting and Fitting

Full units of the proper size shall be used wherever possible, in lieu of cut units. Cutting and fitting, including that required to accommodate the work of others, shall be done by masonry mechanics using power masonry saws. Concrete masonry units may be wet or dry cut. Wet cut units, before being placed in the work, shall be dried to the same surface-dry appearance as uncut units being laid in the wall. Cut edges shall be clean, true and sharp. Openings in the masonry shall be made carefully so that wall plates, cover plates or escutcheons required by the installation will completely conceal the openings and will have bottoms parallel with the masonry bed joints. Reinforced masonry lintels shall be provided above openings over 12 inches wide for pipes, ducts, cable trays, and other wall penetrations, unless steel sleeves are used.

3.2.6 Jointing

Joints shall be tooled when the mortar is thumbprint hard. Horizontal joints shall be tooled last. Joints shall be brushed to remove all loose and excess mortar. Mortar joints shall be finished as follows:

3.2.6.1 Flush Joints

Joints in concealed masonry surfaces and joints at electrical outlet boxes in wet areas shall be flush cut. Flush cut joints shall be made by cutting off the mortar flush with the face of the wall. Joints in unparged masonry walls below grade shall be pointed tight. Flush joints for architectural units, such as fluted units, shall completely fill both the head and bed joints.

3.2.6.2 Tooled Joints

Joints in exposed exterior and interior masonry surfaces shall be tooled

slightly concave. Joints shall be tooled with a jointer slightly larger than the joint width so that complete contact is made along the edges of the unit. Tooling shall be performed so that the mortar is compressed and the joint surface is sealed. Jointer of sufficient length shall be used to obtain a straight and true mortar joint.

3.2.6.3 Door and Window Frame Joints

On the exposed interior side of exterior frames, joints between frames and abutting masonry walls shall be raked to a depth of 3/8 inch. On the exterior side of exterior frames, joints between frames and abutting masonry walls shall be raked to a depth of 3/8 inch.

3.2.7 Joint Widths

Joint widths shall be as follows:

3.2.7.1 Concrete Masonry Units

Concrete masonry units shall have 3/8 inch joints, except for prefaced concrete masonry units.

3.2.7.2 Prefaced Concrete Masonry Units

Prefaced concrete masonry units shall have a joint width of 3/8 inch wide on unfaced side and not less than 3/16 inch nor more than 1/4 inch wide on prefaced side.

3.2.8 Embedded Items

Spaces around built-in items shall be filled with mortar. Openings around flush-mount electrical outlet boxes in wet locations shall be pointed with mortar. Anchors, ties, wall plugs, accessories, flashing, pipe sleeves and other items required to be built-in shall be embedded as the masonry work progresses. Anchors, ties and joint reinforcement shall be fully embedded in the mortar. Cells receiving anchor bolts and cells of the first course below bearing plates shall be filled with grout.

3.2.9 Unfinished Work

Unfinished work shall be stepped back for joining with new work. Toothing may be resorted to only when specifically approved. Loose mortar shall be removed and the exposed joints shall be thoroughly cleaned before laying new work.

3.2.10 Masonry Wall Intersections

Each course shall be masonry bonded at corners and elsewhere as shown. Masonry walls shall be anchored or tied together at corners and intersections with bond beam reinforcement and prefabricated corner or tee pieces of joint reinforcement as shown.

3.2.11 Partitions

Partitions shall be continuous from floor to underside of floor or roof deck where shown. Openings in firewalls around joists or other structural members shall be filled as indicated or approved. Where suspended ceilings on both sides of partitions are indicated, the partitions other than those shown to be continuous may be stopped approximately 4 inches above the

ceiling level. An isolation joint shall be placed in the intersection between partitions and structural or exterior walls as shown. Interior partitions having 4 inch nominal thick units shall be tied to intersecting partitions of 4 inch units, 5 inches into partitions of 6 inch units, and 7 inches into partitions of 8 inch or thicker units. Cells within vertical plane of ties shall be filled solid with grout for full height of partition or solid masonry units may be used. Interior partitions having masonry walls over 4 inches thick shall be tied together with joint reinforcement. Partitions containing joint reinforcement shall be provided with prefabricated pieces at corners and intersections or partitions.

3.3 ANCHORED VENEER CONSTRUCTION

The inner and outer wythes shall be completely separated by a continuous airspace as shown on the drawings. Both the inner and the outer wythes shall be laid up together except when adjustable joint reinforcement assemblies are approved for use. When both wythes are not brought up together, through-wall flashings shall be protected from damage until they are fully enclosed in the wall. The airspace between the wythes shall be kept clear and free of mortar droppings by temporary wood strips laid on the wall ties and carefully lifted out before placing the next row of ties. A coarse gravel or drainage material shall be placed behind the weep holes in the cavity to a minimum depth of 4 inches of coarse aggregate or 10 inches of drainage material to keep mortar droppings from plugging the weep holes.

3.4 WEEP HOLES

Wherever through-wall flashing occurs, provide weep holes to drain flashing to exterior. Weep holes shall be open head joints. at 24 inches o.c. Weep holes shall be provided not more than 24 inches on centers in mortar joints of the exterior wythe above wall flashing, over foundations, bond beams, and any other horizontal interruptions of the cavity. Weep holes shall be constructed using weep hole ventilators. Other approved methods may be used for providing weep holes. Weep holes shall be kept free of mortar and other obstructions.

3.5 COMPOSITE WALLS

Masonry wythes shall be tied together with joint reinforcement or with unit wall ties. Facing shall be anchored to concrete backing with wire dovetail anchors set in slots built in the face of the concrete as specified in Section 03300A CAST-IN-PLACE STRUCTURAL CONCRETE. The facing wythe shall be anchored or tied to the backup at a maximum spacing of 16 inches on center vertically and 24 inches on center horizontally. Unit ties shall be spaced not over 24 inches on centers horizontally, in courses not over 16 inches apart vertically, staggered in alternate courses. Ties shall be laid not closer than 5/8 inch to either masonry face. Ties shall not extend through control joints. Collar joints between masonry facing and masonry backup shall be filled solidly with grout.

3.6 MORTAR

Mortar shall be mixed in a mechanically operated mortar mixer for at least 3 minutes, but not more than 5 minutes. Measurement of ingredients for mortar shall be by volume. Ingredients not in containers, such as sand, shall be accurately measured by the use of measuring boxes. Water shall be mixed with the dry ingredients in sufficient amount to provide a workable mixture which will adhere to the vertical surfaces of masonry units.

Mortar that has stiffened because of loss of water through evaporation shall be retempered by adding water to restore the proper consistency and workability. Mortar that has reached its initial set or that has not been used within 2-1/2 hours after mixing shall be discarded.

3.7 REINFORCING STEEL

Reinforcement shall be cleaned of loose, flaky rust, scale, grease, mortar, grout, or other coating which might destroy or reduce its bond prior to placing grout. Bars with kinks or bends not shown on the drawings shall not be used. Reinforcement shall be placed prior to grouting. Unless otherwise indicated, vertical wall reinforcement shall extend to within 2 inches of tops of walls.

3.7.1 Positioning Bars

Vertical bars shall be accurately placed within the cells at the positions indicated on the drawings. A minimum clearance of 1/2 inch shall be maintained between the bars and masonry units. Minimum clearance between parallel bars shall be one diameter of the reinforcement. Vertical reinforcing may be held in place using bar positioners located near the ends of each bar and at intermediate intervals of not more than 192 diameters of the reinforcement. Column and pilaster ties shall be wired in position around the vertical steel. Ties shall be in contact with the vertical reinforcement and shall not be placed in horizontal bed joints.

3.7.2 Splices

Bars shall be lapped a minimum of 48 diameters of the reinforcement. Welded or mechanical connections shall develop at least 125 percent of the specified yield strength of the reinforcement.

3.8 JOINT REINFORCEMENT INSTALLATION

Joint reinforcement shall be installed at 16 inches on center or as indicated. Reinforcement shall be lapped not less than 6 inches. Prefabricated sections shall be installed at corners and wall intersections. The longitudinal wires of joint reinforcement shall be placed to provide not less than 5/8 inch cover to either face of the unit.

3.9 PLACING GROUT

Cells containing reinforcing bars shall be filled with grout. Hollow masonry units in walls or partitions supporting plumbing, heating, or other mechanical fixtures, voids at door and window jambs, and other indicated spaces shall be filled solid with grout. Cells under lintel bearings on each side of openings shall be filled solid with grout for full height of openings. Walls below grade, lintels, and bond beams shall be filled solid with grout. Units other than open end units may require grouting each course to preclude voids in the units. Grout not in place within 1-1/2 hours after water is first added to the batch shall be discarded. Sufficient time shall be allowed between grout lifts to preclude displacement or cracking of face shells of masonry units. If blowouts, flowouts, misalignment, or cracking of face shells should occur during construction, the wall shall be torn down and rebuilt.

3.9.1 Vertical Grout Barriers for Fully Grouted Walls

Grout barriers shall be provided not more than 30 feet apart, or as

required, to limit the horizontal flow of grout for each pour.

3.9.2 Horizontal Grout Barriers

Grout barriers shall be embedded in mortar below cells of hollow units receiving grout.

3.9.3 Grout Holes and Cleanouts

3.9.3.1 Grout Holes

Grouting holes shall be provided in slabs, spandrel beams, and other in-place overhead construction. Holes shall be located over vertical reinforcing bars or as required to facilitate grout fill in bond beams. Additional openings spaced not more than 16 inches on centers shall be provided where grouting of all hollow unit masonry is indicated. Openings shall not be less than 4 inches in diameter or 3 by 4 inches in horizontal dimensions. Upon completion of grouting operations, grouting holes shall be plugged and finished to match surrounding surfaces.

3.9.3.2 Cleanouts for Hollow Unit Masonry Construction

Cleanout holes shall be provided at the bottom of every pour in cores containing vertical reinforcement when the height of the grout pour exceeds 5 feet. Where all cells are to be grouted, cleanout courses shall be constructed using bond beam units in an inverted position to permit cleaning of all cells. Cleanout holes shall be provided at a maximum spacing of 32 inches where all cells are to be filled with grout. A new series of cleanouts shall be established if grouting operations are stopped for more than 4 hours. Cleanouts shall not be less than 3 by 4 inch openings cut from one face shell. Manufacturer's standard cutout units may be used at the Contractor's option. Cleanout holes shall not be closed until masonry work, reinforcement, and final cleaning of the grout spaces have been completed and inspected. For walls which will be exposed to view, cleanout holes shall be closed in an approved manner to match surrounding masonry.

3.9.3.3 Cleanouts for Solid Unit Masonry Construction

Cleanouts for construction of walls consisting of a grout filled cavity between solid masonry wythes shall be provided at the bottom of every pour by omitting every other masonry unit from one wythe. A new series of cleanouts shall be established if grouting operations are stopped for more than 4 hours. Cleanout holes shall not be plugged until masonry work, reinforcement, and final cleaning of the grout spaces have been completed and inspected. For walls which will be exposed to view, cleanout holes shall be closed in an approved manner to match surrounding masonry.

3.9.4 Grouting Equipment

3.9.4.1 Grout Pumps

Pumping through aluminum tubes will not be permitted. Pumps shall be operated to produce a continuous stream of grout without air pockets, segregation, or contamination. Upon completion of each day's pumping, waste materials and debris shall be removed from the equipment, and disposed of outside the masonry.

3.9.4.2 Vibrators

Internal vibrators shall maintain a speed of not less than 5,000 impulses per minute when submerged in the grout. At least one spare vibrator shall be maintained at the site at all times. Vibrators shall be applied at uniformly spaced points not further apart than the visible effectiveness of the machine. Duration of vibration shall be limited to time necessary to produce satisfactory consolidation without causing segregation.

3.9.5 Grout Placement

Masonry shall be laid to the top of a pour before placing grout. Grout shall not be placed in two-wythe solid unit masonry cavity until mortar joints have set for at least 3 days during hot weather and 5 days during cold damp weather. Grout shall not be placed in hollow unit masonry until mortar joints have set for at least 24 hours. Grout shall be placed using a hand bucket, concrete hopper, or grout pump to completely fill the grout spaces without segregation of the aggregates. Vibrators shall not be inserted into lower pours that are in a semi-solidified state. The height of grout pours and type of grout used shall be limited by the dimensions of grout spaces as indicated in Table III. Low-lift grout methods may be used on pours up to and including 5 feet in height. High-lift grout methods shall be used on pours exceeding 5 feet in height.

3.9.5.1 Low-Lift Method

Grout shall be placed at a rate that will not cause displacement of the masonry due to hydrostatic pressure of the grout. Mortar protruding more than 1/2 inch into the grout space shall be removed before beginning the grouting operation. Grout pours 12 inches or less in height shall be consolidated by mechanical vibration or by puddling. Grout pours over 12 inches in height shall be consolidated by mechanical vibration and reconsolidated by mechanical vibration after initial water loss and settlement has occurred. Vibrators shall not be inserted into lower pours that are in a semi-solidified state. Low-lift grout shall be used subject to the limitations of Table III.

3.9.5.2 High-Lift Method

Mortar droppings shall be cleaned from the bottom of the grout space and from reinforcing steel. Mortar protruding more than 1/4 inch into the grout space shall be removed by dislodging the projections with a rod or stick as the work progresses. Reinforcing, bolts, and embedded connections shall be rigidly held in position before grouting is started. CMU units shall not be pre-wetted. Grout, from the mixer to the point of deposit in the grout space shall be placed as rapidly as practical by pumping and placing methods which will prevent segregation of the mix and cause a minimum of grout splatter on reinforcing and masonry surfaces not being immediately encased in the grout lift. The individual lifts of grout shall be limited to 4 feet in height. The first lift of grout shall be placed to a uniform height within the pour section and vibrated thoroughly to fill all voids. This first vibration shall follow immediately behind the pouring of the grout using an approved mechanical vibrator. After a waiting period sufficient to permit the grout to become plastic, but before it has taken any set, the succeeding lift shall be poured and vibrated 12 to 18 inches into the preceding lift. If the placing of the succeeding lift is going to be delayed beyond the period of workability of the preceding, each lift shall be reconsolidated by reworking with a second vibrator as soon as the grout has taken its settlement shrinkage. The

waiting, pouring, and reconsolidation steps shall be repeated until the top of the pour is reached. The top lift shall be reconsolidated after the required waiting period. The high-lift grouting of any section of wall between vertical grout barriers shall be completed to the top of a pour in one working day unless a new series of cleanout holes is established and the resulting horizontal construction joint cleaned. High-lift grout shall be used subject to the limitations in Table III.

TABLE III

POUR HEIGHT AND TYPE OF GROUT FOR VARIOUS GROUT SPACE DIMENSIONS

Maximum Grout Pour Height (feet) (4)	Grout Type	Grouting Procedure	Minimum Dimensions of the Total Clear Areas Within Grout Spaces and Cells (in.) (1,2) Multiwythe Masonry (3)	Hollow-unit Masonry
1	Fine	Low Lift	3/4	1-1/2 x 2
5	Fine	Low Lift	2	2 x 3
8	Fine	High Lift	2	2 x 3
12	Fine	High Lift	2-1/2	2-1/2 x 3
24	Fine	High Lift	3	3 x 3
1	Coarse	Low Lift	1-1/2	1-1/2 x 3
5	Coarse	Low Lift	2	2-1/2 x 3
8	Coarse	High Lift	2	3 x 3
12	Coarse	High Lift	2-1/2	3 x 3
24	Coarse	High Lift	3	3 x 4

Notes:

(1) The actual grout space or cell dimension must be larger than the sum of the following items:
a) The required minimum dimensions of total clear areas given in the table above;
b) The width of any mortar projections within the space;
c) The horizontal projections of the diameters of the horizontal reinforcing bars within a cross section of the grout space or cell.

(2) The minimum dimensions of the total clear areas shall be made up of one or more open areas, with at least one area being 3/4 inch or greater in width.

(3) For grouting spaces between masonry wythes.

(4) Where only cells of hollow masonry units containing reinforcement are grouted, the maximum height of the pour shall not exceed the distance between horizontal bond beams.

3.10 BOND BEAMS

Bond beams shall be filled with grout and reinforced as indicated on the drawings. Grout barriers shall be installed under bond beam units to retain the grout as required. Reinforcement shall be continuous, including around corners, except through control joints or expansion joints, unless otherwise indicated on the drawings. Where splices are required for continuity, reinforcement shall be lapped 48 bar diameters. A minimum clearance of 1/2 inch shall be maintained between reinforcement and

interior faces of units.

3.11 CONTROL JOINTS

Control joints shall be provided as indicated and shall be constructed by using sash jamb units with control joint key in accordance with the details shown on the drawings. Sash jamb units shall have a 3/4 by 3/4 inch groove near the center at end of each unit. The vertical mortar joint at control joint locations shall be continuous, including through all bond beams. This shall be accomplished by utilizing half blocks in alternating courses on each side of the joint. The control joint key shall be interrupted in courses containing continuous bond beam steel. In single wythe exterior masonry walls, the exterior control joints shall be raked to a depth of 3/4 inch; backer rod and sealant shall be installed in accordance with Section 07900A JOINT SEALING. Exposed interior control joints shall be raked to a depth of 1/4 inch. Concealed control joints shall be flush cut.

3.12 CONCRETE MASONRY VENEER JOINTS

concrete masonry veneer joints shall be provided and constructed as shown on the drawings. Joints shall be kept free of mortar and other debris.

3.13 SHELF ANGLES

Shelf angles shall be adjusted as required to keep the masonry level and at the proper elevation. Shelf angles shall be galvanized. Shelf angles shall be provided in sections not longer than 10 feet and installed with a 1/4 inch gap between sections. Shelf angles shall be mitered and welded at building corners with each angle not shorter than 4 feet, unless limited by wall configuration.

3.14 LINTELS

3.14.1 Masonry Lintels

Masonry lintels shall be constructed with lintel units filled solid with grout in all courses and reinforced with a minimum of two No. 4 bars in the bottom course unless otherwise indicated on the drawings. Lintel reinforcement shall extend beyond each side of masonry opening 40 bar diameters or 24 inches, whichever is greater. Reinforcing bars shall be supported in place prior to grouting and shall be located 1/2 inch above the bottom inside surface of the lintel unit.

3.14.2 Precast Concrete and Steel Lintels

Precast concrete and steel lintels shall be as shown on the drawings. Lintels shall be set in a full bed of mortar with faces plumb and true. Steel and precast lintels shall have a minimum bearing length of 8 inches unless otherwise indicated on the drawings.

3.15 SILLS AND COPINGS

Sills and copings shall be set in a full bed of mortar with faces plumb and true.

3.16 ANCHORAGE TO CONCRETE AND STRUCTURAL STEEL

3.16.1 Anchorage to Concrete

Anchorage of masonry to the face of concrete columns, beams, or walls shall be with dovetail anchors spaced not over 16 inches on centers vertically and 24 inches on center horizontally.

3.16.2 Anchorage to Structural Steel

Masonry shall be anchored to vertical structural steel framing with adjustable steel wire anchors spaced not over 16 inches on centers vertically, and if applicable, not over 24 inches on centers horizontally.

3.17 INSULATION

Anchored veneer walls shall be insulated, where shown, by installing board-type insulation on the cavity side of the inner wythe. Board type insulation shall be applied directly to the masonry or thru-wall flashing with adhesive. Insulation shall be neatly fitted between obstructions without impaling of insulation on ties or anchors. The insulation shall be applied in parallel courses with vertical joints breaking midway over the course below and shall be applied in moderate contact with adjoining units without forcing, and shall be cut to fit neatly against adjoining surfaces.

3.18 SPLASH BLOCKS

Splash blocks shall be located as shown.

3.19 POINTING AND CLEANING

After mortar joints have attained their initial set, but prior to hardening, mortar and grout daubs or splashings shall be completely removed from masonry-unit surfaces that will be exposed or painted. Before completion of the work, defects in joints of masonry to be exposed or painted shall be raked out as necessary, filled with mortar, and tooled to match existing joints. Immediately after grout work is completed, scum and stains which have percolated through the masonry work shall be removed using a high pressure stream of water and a stiff bristled brush. Masonry surfaces shall not be cleaned, other than removing excess surface mortar, until mortar in joints has hardened. Masonry surfaces shall be left clean, free of mortar daubs, dirt, stain, and discoloration, including scum from cleaning operations, and with tight mortar joints throughout. Metal tools and metal brushes shall not be used for cleaning.

3.19.1 Concrete Masonry Unit and

Exposed concrete masonry unit and shall be dry-brushed at the end of each day's work and after any required pointing, using stiff-fiber bristled brushes.

3.20 BEARING PLATES

Bearing plates for beams, joists, joist girders and similar structural members shall be set to the proper line and elevation with damp-pack bedding mortar, except where non-shrink grout is indicated. Bedding mortar and non-shrink grout shall be as specified in Section 03300A CAST-IN-PLACE STRUCTURAL CONCRETE.

3.21 PROTECTION

Facing materials shall be protected against staining. Top of walls shall be covered with nonstaining waterproof covering or membrane when work is not in progress. Covering of the top of the unfinished walls shall continue until the wall is waterproofed with a complete roof or parapet system. Covering shall extend a minimum of 2 feet down on each side of the wall and shall be held securely in place. Before starting or resuming, top surface of masonry in place shall be cleaned of loose mortar and foreign material.

3.22 TEST REPORTS

3.22.1 Field Testing of Mortar

At least three specimens of mortar shall be taken each day. A layer of mortar 1/2 to 5/8 inch thick shall be spread on the masonry units and allowed to stand for one minute. The specimens shall then be prepared and tested for compressive strength in accordance with ASTM C 780.

3.22.2 Field Testing of Grout

Field sampling and testing of grout shall be in accordance with the applicable provisions of ASTM C 1019. A minimum of three specimens of grout per day shall be sampled and tested. Each specimen shall have a minimum ultimate compressive strength of 2000 psi at 28 days.

3.22.3 Prism Tests

At least one prism test sample shall be made for each 5,000 square feet of wall but not less than three such samples shall be made for any building. Three prisms shall be used in each sample. Prisms shall be tested in accordance with ACI 530/530.1. Seven-day tests may be used provided the relationship between the 7- and 28-day strengths of the masonry is established by the tests of the materials used. Compressive strength shall not be less than the psi indicated in the structural drawingsat 28 days. If the compressive strength of any prism falls below the specified value by more than 500 psi, steps shall be taken to assure that the load-carrying capacity of the structure is not jeopardized. If the likelihood of low-strength masonry is confirmed and computations indicate that the load-carrying capacity may have been significantly reduced, tests of cores drilled, or prisms sawed, from the area in question may be required. In such case, three specimens shall be taken for each prism test more than 500 psi below the specified value. Masonry in the area in question shall be considered structurally adequate if the average compressive strength of three specimens is equal to at least 85 percent of the specified value, and if the compressive strength of no single specimen is less than 75 percent of the specified value. Additional testing of specimens extracted from locations represented by erratic core or prism strength test results shall be permitted.

3.23 SPECIAL INSPECTION AND TESTING FOR SEISMIC-RESISTING SYSTEMS

Special inspections and testing for seismic-resisting systems and components shall be done in accordance with Section 01452A SPECIAL INSPECTION FOR SEISMIC-RESISTING SYSTEMS.

-- End of Section --

SECTION TABLE OF CONTENTS

DIVISION 04 - MASONRY

SECTION 04215

PREFACED CONCRETE MASONRY UNITS

08/02

PART 1 GENERAL

1.1 REFERENCES
1.2 SUBMITTALS
1.3 DELIVERY, STORAGE, AND HANDLING

PART 2 PRODUCTS

2.1 SHAPES AND TOLERANCES
2.2 PREFACED CONCRETE MASONRY UNITS
2.3 MORTAR AND GROUT
2.3.1 Mortar
2.3.2 Grout
2.3.3 Water
2.4 ANCHORS AND TIES
2.4.1 Galvanizing
2.4.2 Rigid Anchors
2.4.3 Wire Ties
2.4.4 Horizontal Truss

PART 3 EXECUTION

3.1 PROTECTION
3.2 INSTALLATION
3.3 MORTAR
3.4 JOINTS
3.4.1 Tooled Joints
3.4.2 Control Joints
3.4.3 Other Work
3.4.4 BONDING AND ANCHORING
3.4.5 Anchor to Structural Elements
3.4.6 Double-Faced Bases or Partitions
3.4.7 Ends of Partitions
3.5 POINTING AND CLEANING

-- End of Section Table of Contents --

UFGS-04215 (August 2002)

SECTION 04215

PREFACED CONCRETE MASONRY UNITS
08/02

PART 1 GENERAL

1.1 REFERENCES

The publications listed below form a part of this specification to the extent referenced. The publications are referred to within the text by the basic designation only.

ASTM INTERNATIONAL (ASTM)

ASTM A 153/A 153M	(2003) Zinc Coating (Hot-Dip) on Iron and Steel Hardware
ASTM A 568/A 568M	(2003) Steel, Sheet, Carbon, and High-Strength, Low-Alloy, Hot-Rolled and Cold-Rolled, General Requirements for
ASTM A 82	(2002) Steel Wire, Plain, for Concrete Reinforcement
ASTM C 270	(2003) Mortar for Unit Masonry
ASTM C 476	(2002) Grout for Masonry
ASTM C 744	(1999) Prefaced Concrete and Calcium Silicate Masonry Units
ASTM C 90	(2003) Loadbearing Concrete Masonry Units

1.2 SUBMITTALS

Government approval is required for submittals with a "G" designation; submittals not having a "G" designation are for information only or as otherwise designated. When used, a designation following the "G" designation identifies the office that will review the submittal for the Government. The following shall be submitted in accordance with Section 01330 SUBMITTAL PROCEDURES:

SD-03 Product Data

Prefaced Concrete Masonry Units

Manufacturer's descriptive data.

SD-04 Samples

Prefaced Concrete Masonry Units; G, RO

Submit three individual units of each color showing texture and the extreme variations in each color. Submit one of each shaped

unit in each color.

Prefaced Concrete Masonry Units;G, RO

Before starting ceramic glazed structural clay facing tile and prefaced concrete masonry unit work, erect where directed, a sample panel, approximately 4 feet long by 4 feet high of each type of unit approved by the Contracting Officer. Show the workmanship, bond, jointing, range of color of units, and mortar color. Match workmanship of panels throughout the project with that of the approved sample.

SD-07 Certificates

Prefaced Concrete Masonry Units

Certificates of compliance stating that the materials meet the specified requirements.

1.3 DELIVERY, STORAGE, AND HANDLING

a. Prefaced masonry shall be packed in the manufacturer's standard paper cartons, trays, or shrink wrapped pallets with a divider between each unit. Do not stack pallets. Do not remove units from cartons until cartons are placed on scaffolds or in the location where units are to be laid.

b. Furnish packaged cementitious materials in bags displaying the manufacturer's trademark and type. Material shall be dry and free of lumps when delivered. Store material in dry, weathertight, and properly ventilated structures. Different brands or types of mortar shall be stored separately.

c. Store and handle aggregates in a manner that will prevent intermixing with foreign matter.

d. Store anchors and ties in containers, in a dry and weathertight structure.

PART 2 PRODUCTS

2.1 SHAPES AND TOLERANCES

a. Provide units of shapes indicated or necessary for proper installation. Unless indicated otherwise, vertical external corners, sills, jambs, and caps shall be bullnosed; lintels and internal corners shall be square. Bases shall be flush with the wall surface above.

b. Provide manufactured bond beam and open end units where required for placement of reinforcing.

2.2 PREFACED CONCRETE MASONRY UNITS

Prefaced concrete masonry units shall conform to ASTM C 744 using masonry units conforming to ASTM C 90. The facing shall turn over the edges and ends of the unit at least 3/8 inch in the direction of the thickness of the unit to form a lip at least 1/16 inch thick. Variation in color and texture shall not exceed that of the approved samples. All shapes and

sizes shall be provided for a complete installation. Bullnose units shall be used along sills and caps and at vertical external corners including door jambs, window jambs, and other such openings. Radius of the bullnose shall be 1 inch. Base units shall be coved to meet finished floor surfaces where ceramic tile floor occurs.

2.3 MORTAR AND GROUT

2.3.1 Mortar

ASTM C 270, Type M orS, Type I portland cement, Type IP blended hydraulic cement, or masonry cement, standard gray in color , except provide white portland cement shall be used for pointing mortar. Proportion to the requirements of Table 1, ASTM C 270. Admixtures containing calcium chloride, antifreeze liquids or salts will not be permitted. Mortar for structural masonry shall be as specified in Section 04200 MASONRY.

2.3.2 Grout

ASTM C 476, coarse, portland cement Type I or blended hydraulic cement Type IP.

2.3.3 Water

Water for mixing shall be potable.

2.4 ANCHORS AND TIES

2.4.1 Galvanizing

ASTM A 153/A 153M, B-2. Anchors and ties shall be galvanized.

2.4.2 Rigid Anchors

ASTM A 568/A 568M. Intersecting wall anchors shall be as indicated.

2.4.3 Wire Ties

ASTM A 82, 3/16 inch diameter minimum.

2.4.4 Horizontal Truss

ASTM A 82, minimum 9 gauge longitudinal and 12 gauge cross wires. Use at 16 inches o.c. or every other row.

PART 3 EXECUTION

3.1 PROTECTION

Protect work from damage by other trades at all times. Provide plywood barricades in heavy traffic areas. Protect cove base from damage by scaffold legs.

3.2 INSTALLATION

The ambient temperature where materials are to be installed shall be not less than 40 degrees F and rising, but not more than 85 degrees F. Maintain temperature requirements by methods approved by the Contracting Officer for the period the work is being performed and at least 48 hours

after the work is completed. Do not use admixtures or antifreeze compounds.

a. Lay work out in advance to determine jointing and cutting and to obtain uniformity in the finished work. Joints in glazed structural clay facing-tile shall be approximately 1/4 inch. Joints in pre-faced masonry units shall be 1/4 inch on exposed glazed face(s), allowing standard 3/8 inch joint between unglazed portions of the concrete masonry units.

b. Vertical joints shall be plumb from the top to the bottom of the panel, and courses level. Except where stack-bond or other special pattern is indicated, use running bond. Bond and interlock each course at corners and intersections. Exposed tile or masonry unit work shall be free from irregularities, waves, depressions, or other defects of workmanship.

c. Windows, door frames, loose lintels and miscellaneous steel, cabinets, mechanical and electrical work, expansion-joint material, flashing, anchors, ties, and accessories shall be built in as masonry work progresses. Fill spaces around metal door frames solidly with mortar. Solidly bed built-ins in mortar or grout.

3.3 MORTAR

a. Mix mortar in accordance with ASTM C 270. Mix mortar materials for at least 3 minutes in a mechanical batch mixer, with the minimum amount of water required to produce a working consistency.

b. Perform hand mixing, when permitted, in a tight mortar mixing box. Mixing time shall be not less than required to reproduce results obtained by machine mixing after the required amount of water has been added.

c. Place mortar in final position within 2 1/4 hours after mixing. Discard mortar not used within the specified time limit.

3.4 JOINTS

3.4.1 Tooled Joints

Except for joints to be sealed or raked, tool exposed joints to a dense concave profile, with surface and edges compacted and sealed. Perform tooling after joints are "thumbprint" hard.

3.4.2 Control Joints

Rake out joints to act as control joints to a depth of 1/2 inch, clean, and leave ready for filler and sealant.

3.4.3 Other Work

Rake out exterior and interior joints between metal frames and masonry, joints between mechanical equipment and masonry, and other joints as indicated to the required depth and leave ready for sealant.

3.4.4 BONDING AND ANCHORING

3.4.5 Anchor to Structural Elements

Anchor facing-tile or prefaced unit masonry panels to structural elements as indicated.

3.4.6 Double-Faced Bases or Partitions

Double-faced bases and partitions shall be of two-unit construction for clay units. Bond units by overlapping from opposite faces of the wall, 2 inches for 6 inch thick partitions and 4 inches for 8 inch thick or greater. A single wythe prefaced concrete masonry base or partition may be made with double faced units.

3.4.7 Ends of Partitions

Anchor ends of walls or partitions abutting columns, piers, or other walls as indicated. Intersecting walls shall have rigid tie anchors grouted into cells every course or the units shall be toothed into the other wall.

3.5 POINTING AND CLEANING

a. Remove excess mortar as work progresses.

b. Upon completion of the work, rake holes and defects in exposed mortar joints and fill with fresh mortar. Tool as previously specified. Replace cracked or defective blocks.

c. Facing tile shall be given a final cleaning with cleaning compound and method as recommended by the masonry manufacturer. Do not use muriatic acid on glazed finish.

d. Protect finished work from damage.

-- End of Section --

SECTION TABLE OF CONTENTS

DIVISION 05 - METALS

SECTION 05120

STRUCTURAL STEEL

08/03

PART 4 GENERAL

1.1 REFERENCES
1.2 SYSTEM DESCRIPTION
1.3 MODIFICATIONS TO REFERENCES
1.4 SUBMITTALS
1.5 AISC QUALITY CERTIFICATION
1.6 SEISMIC PROVISIONS
1.7 QUALITY ASSURANCE
1.7.1 Drawing Requirements
1.7.2 Certifications
1.7.2.1 Erection Plan
1.7.2.2 Welding Procedures and Qualifications

PART 2 PRODUCTS

2.1 STEEL
2.1.1 Structural Steel
2.1.2 Structural Shapes for Use in Building Framing
2.1.3 Structural Steel Tubing
2.1.4 Recycled Content
2.2 BOLTS, NUTS, AND WASHERS
2.2.1 Structural Steel
2.2.1.1 Bolts
2.2.1.2 Nuts
2.2.1.3 Washers
2.2.2 Structural Steel Tubing
2.2.2.1 Bolts
2.2.2.2 Nuts
2.2.2.3 Washers
2.2.3 Foundation Anchorage
2.2.3.1 Bolts
2.2.3.2 Nuts
2.2.3.3 Washers
2.2.4 Load Indicator Washers
2.2.5 Load Indicator Bolts
2.3 STRUCTURAL STEEL ACCESSORIES
2.3.1 Welding Electrodes and Rods
2.3.2 Nonshrink Grout
2.3.3 Welded Shear Stud Connectors
2.4 SHOP PRIMER
2.5 GALVANIZING
2.6 FABRICATION
2.6.1 Markings
2.6.2 Shop Primer
2.6.2.1 Cleaning
2.6.2.2 Primer
2.6.3 Coordination

PART 3 EXECUTION

3.1 FABRICATION
3.2 ERECTION
3.2.1 STORAGE
3.3 CONNECTIONS
3.3.1 Common Grade Bolts
3.3.2 High-Strength Bolts
3.3.2.1 Installation of Load Indicator Washers (LIW)
3.4 WELDING
3.4.1 Removal of Temporary Welds, Run-Off Plates, and Backing Strips
3.5 SHOP PRIMER REPAIR
3.5.1 Field Priming
3.6 GALVANIZING REPAIR
3.7 FIELD QUALITY CONTROL
3.7.1 Welds
3.7.1.1 Visual Inspection
3.7.2 Load Indicator Washers
3.7.2.1 Load Indicator Washer Compression
3.7.3 High-Strength Bolts
3.7.3.1 Testing Bolt, Nut, and Washer Assemblies
3.7.3.2 Inspection
3.7.3.3 Testing
3.8 SPECIAL INSPECTION AND TESTING FOR SEISMIC-RESISTING SYSTEMS

-- End of Section Table of Contents --

UFGS-05120 (August 2003)

SECTION 05120

STRUCTURAL STEEL
08/03

PART 4 GENERAL

1.1 REFERENCES

The publications listed below form a part of this specification to the extent referenced. The publications are referred to in the text by the basic designation only.

AMERICAN INSTITUTE OF STEEL CONSTRUCTION (AISC)

AISC FCD	(1995a) Quality Certification Program Description
AISC 316	(1989) ASD Manual of Steel Construction
AISC 317	(1992; Errata 1994) Connections
AISC 326	(2002) Detailing for Steel Construction
AISC 303	(2000) Steel Buildings and Bridges
AISC 348	(2000) Structural Joints Using ASTM A325 or A490 Bolts
AISC 335	(1989) Structural Steel Buildings Allowable Stress Design and Plastic Design
AISC S340	(1992) Metric Properties of Structural Shapes with Dimensions According to ASTM A6M
AISC 341	(1997) Seismic Provisions for Structural Steel Buildings

ASME INTERNATIONAL (ASME)

ASME B46.1	(2002) Surface Texture, (Surface Roughness, Waviness, and Lay)

AMERICAN SOCIETY FOR TESTING AND MATERIALS (ASTM)

ASTM A 6/A 6M	(2003) General Requirements for Rolled Structural Steel Bars, Plates, Shapes, and Sheet Piling
ASTM A 36/A 36M	(2002) Carbon Structural Steel
ASTM A 123/A 123M	(2002) Zinc (Hot-Dip Galvanized) Coatings on Iron and Steel Products

ASTM A 153/A 153M	(2003) Zinc Coating (Hot-Dip) on Iron and Steel Hardware
ASTM A 307	(2002) Carbon Steel Bolts and Studs, 60,000 psi Tensile Strength
ASTM A 325M	(2003) High-Strength Bolts for Structural Steel Joints (Metric)
ASTM A 325	(2002) Structural Bolts, Steel, Heat Treated, 120/105 ksi Minimum Tensile Strength
ASTM A 500	(2003) Cold-Formed Welded and Seamless Carbon Steel Structural Tubing in Rounds and Shapes
ASTM A 563	(2000) Carbon and Alloy Steel Nuts
ASTM A 780	(2001) Repair of Damaged and Uncoated Areas of Hot-Dip Galvanized Coatings
ASTM A 992/A 992M	(2002) Structural Steel Shapes
ASTM C 827	(2001; Rev A) Change in Height at Early Ages of Cylindrical Specimens from Cementitious Mixtures
ASTM C 1107	(2002) Packaged Dry, Hydraulic-Cement Grout (Nonshrink)
ASTM F 436	(2002) Hardened Steel Washers
ASTM F 844	(2000) Washers, Steel, Plain (Flat), Unhardened for General Use
ASTM F 959	(2002) Compressible-Washer-Type Direct Tension Indicators for Use with Structural Fasteners

AMERICAN WELDING SOCIETY (AWS)

AWS A2.4	(1998) Standard Symbols for Welding, Brazing and Nondestructive Examination
AWS D1.1/D1.1M	(2002) Structural Welding Code - Steel

STEEL STRUCTURES PAINTING COUNCIL (SSPC)

SSPC SP 3	(1982; R 2000) Power Tool Cleaning
SSPC SP 6	(2000) Commercial Blast Cleaning
SSPC Paint 25	(1997; R 2000) Zinc Oxide, Alkyd, Linseed Oil Primer for Use Over Hand Cleaned Steel Type I and Type II
SSPC PA 1	(2000) Shop, Field, and Maintenance

Painting

SSPC PS 13.01	(1982; R 2000) Epoxy-Polyamide Painting System

1.2 SYSTEM DESCRIPTION

Provide the structural steel system, including shop primer and galvanizing, complete and ready for use. Structural steel systems including design, materials, installation, workmanship, fabrication, assembly, erection, inspection, quality control, and testing shall be provided in accordance with AISC 316 and AISC 317 except as modified in this contract.

1.3 MODIFICATIONS TO REFERENCES

In AISC 316, AISC 317, AISC 335, AISC 303, AISC 348, and AISC S340, except as modified in this section, shall be considered a part of AISC 316 and AISC 317 and is referred to in this section as AISC 316 and AISC 317.

1.4 SUBMITTALS

Government approval is required for submittals with a "G" designation; submittals not having a "G" designation are for information only or as otherwise designated. When used, a designation following the "G" designation identifies the office that will review the submittal for the Government. The following shall be submitted in accordance with Section 01330 SUBMITTAL PROCEDURES:

SD-02 Shop Drawings

Erection Plan, including description of temporary supports; G, AE

Coordinate location of steel joist erection bolts with steel joist supplier. Submittals without evidence of coordination will be rejected.

Fabrication drawings including description of connections; G, AE

SD-03 Product Data

Shop primer

Load indicator washers

Load indicator bolts

SD-06 Test Reports

Bolts, nuts, and washers

Supply the certified manufacturer's mill reports which clearly show the applicable ASTM mechanical and chemical requirements together with the actual test results for the supplied fasteners.

SD-07 Certificates

Steel

Bolts, nuts, and washers

Shop primer

Welding electrodes and rods

Nonshrink grout

Galvanizing

AISC Quality Certification

Welding procedures and qualifications

Recycled Content

Certification and calculations attesting to the actual content of recycled material utilized in the manufacture of the structural steel in the Project

1.5 AISC QUALITY CERTIFICATION

Work shall be fabricated in an AISC certified Category Sbd fabrication plant.

1.6 SEISMIC PROVISIONS

In addition to AISC 316, the structural steel system shall be provided in accordance with AISC 341.

1.7 QUALITY ASSURANCE

1.7.1 Drawing Requirements

Submit fabrication drawings for approval prior to fabrication. Prepare in accordance with AISC 326, AISC 316 and AISC 317. Drawings shall not be reproductions of contract drawings. Include complete information for the fabrication and erection of the structure's components, including the location, type, and size of bolts, welds, member sizes and lengths, connection details, blocks, copes, and cuts. Use AWS A2.4 standard welding symbols. Shoring and temporary bracing shall be designed and sealed by a registered professional engineer and submitted for record purposes as part of the drawings.

1.7.2 Certifications

1.7.2.1 Erection Plan

Submit for record purposes. Indicate the sequence of erection, temporary shoring and bracing, and a detailed sequence of welding, including each welding procedure required.

1.7.2.2 Welding Procedures and Qualifications

Prior to welding, submit certification for each welder stating the type of welding and positions qualified for, the code and procedure qualified under, date qualified, and the firm and individual certifying the qualification tests. If the qualification date of the welding operator is more than one-year old, the welding operator's qualification certificate

shall be accompanied by a current certificate by the welder attesting to the fact that he has been engaged in welding since the date of certification, with no break in welding service greater than 6 months.

PART 2 PRODUCTS

2.1 STEEL

2.1.1 Structural Steel

ASTM A 36/A 36M.

2.1.2 Structural Shapes for Use in Building Framing

Wide flange shapes, ASTM A 992/A 992M.

2.1.3 Structural Steel Tubing

ASTM A 500, Grade B.

2.1.4 Recycled Content

Post-consumer recycled material shall account for 25 percent of the steel.

2.2 BOLTS, NUTS, AND WASHERS

Provide the following unless indicated otherwise.

2.2.1 Structural Steel

2.2.1.1 Bolts

ASTM A 325, Type 1. The bolt heads and the nuts of the supplied fasteners must be marked with the manufacturer's identification mark, the strength grade and type specified by ASTM specifications.

2.2.1.2 Nuts

ASTM A 563, Grade and Style for applicable ASTM bolt standard recommended.

2.2.1.3 Washers

ASTM F 844 washers for ASTM A 307 bolts, and ASTM F 436 washers for ASTM A 325 bolts.

2.2.2 Structural Steel Tubing

2.2.2.1 Bolts

ASTM A 325, Type 1.

2.2.2.2 Nuts

ASTM A 563, Grade and Style as specified in the applicable ASTM bolt standard.

2.2.2.3 Washers

ASTM F 436, plain carbon steel.

2.2.3 Foundation Anchorage

2.2.3.1 Bolts

ASTM A 307.

2.2.3.2 Nuts

ASTM A 563, Grade A, hex style.

2.2.3.3 Washers

ASTM F 844.

2.2.4 Load Indicator Washers

ASTM F 959.

2.2.5 Load Indicator Bolts

ASTM A 325, Type 1; with a manufactured notch between the bolt tip and threads. The bolt shall be designed to react to the opposing rotational torques applied by the installation wrench, with the bolt tip automatically shearing off when the proper tension is obtained.

2.3 STRUCTURAL STEEL ACCESSORIES

2.3.1 Welding Electrodes and Rods

AWS D1.1/D1.1M.

2.3.2 Nonshrink Grout

ASTM C 1107, with no ASTM C 827 shrinkage. Grout shall be nonmetallic.

2.3.3 Welded Shear Stud Connectors

AWS D1.1/D1.1M.

2.4 SHOP PRIMER

SSPC Paint 25, (alkyd primer) or SSPC PS 13.01 epoxy-polyamide, green primer (Form 150) type 1. Primer shall conform to Federal, State, and local VOC regulations. If flash rusting occurs, re-clean the surface prior to application of primer.

2.5 GALVANIZING

ASTM A 123/A 123M or ASTM A 153/A 153M, as applicable, unless specified otherwise. Galvanize after fabrication where practicable.

2.6 FABRICATION

2.6.1 Markings

Prior to erection, members shall be identified by a painted erection mark. Connecting parts assembled in the shop for reaming holes in field connections shall be match marked with scratch and notch marks. Do not locate erection markings on areas to be welded. Do not locate match markings in areas that will decrease member strength or cause stress concentrations. Affix embossed tags to hot-dipped galvanized members.

2.6.2 Shop Primer

Shop prime structural steel, except as modified herein, in accordance with SSPC PA 1. Do not prime steel surfaces embedded in concrete, galvanized surfaces, surfaces within 0.5 inch of the toe of the welds prior to welding (except surfaces on which metal decking is to be welded). Prior to assembly, prime surfaces which will be concealed or inaccessible after assembly. Do not apply primer in foggy or rainy weather; when the ambient temperature is below 45 degrees F or over 95 degrees F; or when the primer may be exposed to temperatures below 40 degrees F within 48 hours after application, unless approved otherwise by the Contracting Officer.

2.6.2.1 Cleaning

SSPC SP 6, except steel exposed in spaces above ceilings, attic spaces, furred spaces, and chases that will be hidden to view in finished construction may be cleaned to SSPC SP 3 when recommended by the shop primer manufacturer. Maintain steel surfaces free from rust, dirt, oil, grease, and other contaminants through final assembly.

2.6.2.2 Primer

Apply primer to a minimum dry film thickness of 2.0 mil. Repair damaged primed surfaces with an additional coat of primer.

2.6.3 Coordination

Provide holes and connections as indicated or as required for erection of steel joists. Coordinate with steel joist supplier.

PART 3 EXECUTION

3.1 FABRICATION

Fabrication shall be in accordance with the applicable provisions of AISC 316. Fabrication and assembly shall be done in the shop to the greatest extent possible. The fabricating plant shall be certified under the AISC FCD for Category SBd structural steelwork. Compression joints depending on contact bearing shall have a surface roughness not in excess of 500 micro inches as determined by ASME B46.1, and ends shall be square within the tolerances for milled ends specified in ASTM A 6/A 6M. Structural steelwork, except surfaces to be field welded shall be prepared for painting in accordance with endorsement "P" of AISC FCD and primed with the specified paint.

3.2 ERECTION

a: Erection of structural steel shall be in accordance with the

applicable provisions of AISC 316. Erection plan shall be reviewed, stamped and sealed by a licensed structural engineer.

Provide for drainage in structural steel. After final positioning of steel members, provide full bearing under base plates and bearing plates using nonshrink grout. Place nonshrink grout in accordance with the manufacturer's instructions.

3.2.1 STORAGE

Material shall be stored out of contact with the ground in such manner and location as will minimize deterioration.

3.3 CONNECTIONS

Except as modified in this section, connections not detailed shall be designed in accordance with AISC 335. Build connections into existing work. Do not tighten anchor bolts set in concrete with impact torque wrenches. Punch, subpunch and ream, or drill bolt holes. Bolts, nuts, and washers shall be clean of dirt and rust, and lubricated immediately prior to installation.

3.3.1 Common Grade Bolts

ASTM A 307 bolts shall be tightened to a "snug tight" fit. "Snug tight" is the tightness that exists when plies in a joint are in firm contact. If firm contact of joint plies cannot be obtained with a few impacts of an impact wrench, or the full effort of a man using a spud wrench, contact the Contracting Officer for further instructions.

3.3.2 High-Strength Bolts

ASTM A 325 bolts shall be fully tensioned to 70 percent of their minimum tensile strength. Provide load indicator bolts or washers in all ASTM A 325M bolted connections, except provide only load indicator washers for slip critical connections. Direct tension indicator tightening shall be the only acceptable tightening methods. Bolts shall be installed in connection holes and initially brought to a snug tight fit. After the initial tightening procedure, bolts shall then be fully tensioned, progressing from the most rigid part of a connection to the free edges.

3.3.2.1 Installation of Load Indicator Washers (LIW)

ASTM F 959. Where possible, the LIW shall be installed under the bolt head and the nut shall be tightened. If the LIW is installed adjacent to the turned element, provide a flat ASTM F 436 washer between the LIW and nut when the nut is turned for tightening, and between the LIW and bolt head when the bolt head is turned for tightening.

3.4 WELDING

AWS D1.1/D1.1M. Grind exposed welds smooth as indicated. Provide AWS D1.1/D1.1M qualified welders, welding operators, and tackers.

The contractor shall develop and submit the Welding Procedure Specifications (WPS) for all welding, including welding done using prequalified procedures. Prequalified procedures may be submitted for information only; however, procedures that are not prequalified shall be submitted for approval.

3.4.1 Removal of Temporary Welds, Run-Off Plates, and Backing Strips

Removal is not required.

3.5 SHOP PRIMER REPAIR

Repair shop primer in accordance with the paint manufacturer's recommendation for surfaces damaged by handling, transporting, cutting, welding, or bolting.

3.5.1 Field Priming

Field priming of steel exposed to the weather, or located in building areas without HVAC for control of relative humidity. After erection, the field bolt heads and nuts, field welds, and any abrasions in the shop coat shall be cleaned and primed with paint of the same quality as that used for the shop coat.

3.6 GALVANIZING REPAIR

Provide as indicated or specified. Galvanize after fabrication where practicable. Repair damage to galvanized coatings using ASTM A 780 zinc rich paint for galvanizing damaged by handling, transporting, cutting, welding, or bolting. Do not heat surfaces to which repair paint has been applied.

3.7 FIELD QUALITY CONTROL

Perform field tests, and provide labor, equipment, and incidentals required for testing, except that electric power for field tests will be furnished as set forth in Division 1. The Contracting Officer shall be notified in writing of defective welds, bolts, nuts, and washers within 7 working days of the date of weld inspection.

3.7.1 Welds

3.7.1.1 Visual Inspection

AWS D1.1/D1.1M. Furnish the services of AWS-certified welding inspectors for fabrication and erection inspection and testing and verification inspections. Welding inspectors shall visually inspect and mark welds, including fillet weld end returns.

3.7.2 Load Indicator Washers

3.7.2.1 Load Indicator Washer Compression

Load indicator washers shall be tested in place to verify that they have been compressed sufficiently to provide the 0.015 inch gap when the load indicator washer is placed under the bolt head and the nut is tightened, and to provide the 0.005 inch gap when the load indicator washer is placed under the turned element, as required by ASTM F 959.

3.7.3 High-Strength Bolts

3.7.3.1 Testing Bolt, Nut, and Washer Assemblies

Test a minimum of 3 bolt, nut, and washer assemblies from each mill

certificate batch in a tension measuring device at the job site prior to the beginning of bolting start-up. Demonstrate that the bolts and nuts, when used together, can develop tension not less than the provisions specified in AISC 348, Table 4, depending on bolt size and grade. The bolt tension shall be developed by tightening the nut. A representative of the manufacturer or supplier shall be present to ensure that the fasteners are properly used, and to demonstrate that the fastener assemblies supplied satisfy the specified requirements.

3.7.3.2 Inspection

Inspection procedures shall be in accordance with AISC 348, Section 9. Confirm and report to the Contracting Officer that the materials meet the project specification and that they are properly stored. Confirm that the faying surfaces have been properly prepared before the connections are assembled. Observe the specified job site testing and calibration, and confirm that the procedure to be used provides the required tension. Monitor the work to ensure the testing procedures are routinely followed on joints that are specified to be fully tensioned.

3.7.3.3 Testing

The Government has the option to perform nondestructive tests on 5 percent of the installed bolts to verify compliance with pre-load bolt tension requirements. The nondestructive testing will be done in-place using an ultrasonic measuring device or any other device capable of determining in-place pre-load bolt tension. The test locations shall be selected by the Contracting Officer. If more than 10 percent of the bolts tested contain defects identified by testing, then all bolts used from the batch from which the tested bolts were taken, shall be tested. Retest new bolts after installation.

3.8 SPECIAL INSPECTION AND TESTING FOR SEISMIC-RESISTING SYSTEMS

Special inspections and testing for seismic-resisting systems and components shall be done in accordance with Section 01452A SPECIAL INSPECTION FOR SEISMIC-RESISTING SYSTEMS.

-- End of Section --

SECTION TABLE OF CONTENTS

DIVISION 05 - METALS

SECTION 05210A

STEEL JOISTS

12/02

PART 1 GENERAL

1.1 REFERENCES
1.2 SUBMITTALS
1.3 GENERAL REQUIREMENTS
1.3.1 Recycled Content
1.4 DELIVERY AND STORAGE

PART 2 PRODUCTS

2.1 OPEN WEB STEEL JOISTS
2.2 LONGSPAN STEEL JOISTS
2.3 ACCESSORIES AND FITTINGS
2.4 SHOP PAINTING

PART 3 EXECUTION

3.1 ERECTION
3.2 BEARING PLATES

-- End of Section Table of Contents --

UFGS-05210A (December 2002)

SECTION 05210A

STEEL JOISTS
12/02

PART 1 GENERAL

1.1 REFERENCES

The publications listed below form a part of this specification to the extent referenced. The publications are referred to in the text by basic designation only.

STEEL JOIST INSTITUTE (SJI)

SJI Specs & Tables	(August 2002) Standard Specifications and Load Tables for Steel Joists and Joist Girders

1.2 SUBMITTALS

Government approval is required for submittals with a "G" designation; submittals not having a "G" designation are for information only. When used, a designation following the "G" designation identifies the office that will review the submittal for the Government. The following shall be submitted in accordance with Section 01330 SUBMITTAL PROCEDURES:

SD-02 Shop Drawings

Steel Joists; G, AE

Detail drawings shall include fabrication and erection details, specifications for shop painting, and identification markings of joists.

SD-07 Certificates

Steel Joists

Certificates stating that the steel joists have been designed and manufactured in accordance with SJI Specs & Tables. Complete engineering design computations may be submitted in lieu of the certification.

Recycled Content

Certification and calculations attesting to the actual content of recycled material utilized in the manufacture of the steel joists and accessories in the Project

1.3 GENERAL REQUIREMENTS

Steel joists are designated on the drawings in accordance with the standard

designations of the Steel Joist Institute. Joists of other standard designations or joists with properties other than those shown may be substituted for the joists designated provided the structural properties are equal to or greater than those of the joists shown and provided all other specified requirements are met.

1.3.1 Recycled Content

Post-consumer recycled material shall account for 25 percent of the steel.

1.4 DELIVERY AND STORAGE

Materials shall be delivered to the site in undamaged condition and stored off the ground in a well drained location, protected from damage, and easily accessible for inspection and handling.

PART 2 PRODUCTS

2.1 OPEN WEB STEEL JOISTS

Open web steel joists shall conform to SJI Specs & Tables, K-Series. Joists shall be designed to support the loads given in the standard load tables of SJI Specs & Tables.

2.2 LONGSPAN STEEL JOISTS

Deep longspan steel joists shall conform to SJI Specs & Tables, DLH-Series. Joists designated DLH shall be designed to support the loads given in the applicable standard load tables of SJI Specs & Tables.

2.3 ACCESSORIES AND FITTINGS

Accessories and fittings, including end supports and bridging, shall be in accordance with the standard specifications under which the members were designed.

2.4 SHOP PAINTING

Joists and accessories shall be shop painted with a rust-inhibiting primer paint. For joists which will be finish painted under Section 09900 PAINTING, GENERAL, the primer paint shall be limited to a primer which is compatible with the specified finish paint.

PART 3 EXECUTION

3.1 ERECTION

Installation of joists shall be in accordance with the standard specification under which the member was produced. Joists shall be handled in a manner to avoid damage. Damaged joists shall be removed from the site, except when field repair is approved and such repairs are satisfactorily made in accordance with the manufacturer's recommendations. Joists shall be accurately set, and end anchorage shall be in accordance with the standard specification under which the joists were produced. For spans over 40 ft through 60 ft one row of bridging nearest midspan shall be bolted diagonal bridging; for spans over 60 ft bolted diagonal bridging shall be used instead of welded horizontal bridging. Joist bridging and anchoring shall be secured in place prior to the application of any construction loads. Any temporary loads shall be distributed so that the

carrying capacity of any joist is not exceeded. Loads shall not be applied to bridging during construction or in the completed work. Abraded, corroded, and field welded areas shall be cleaned and touched up with the same type of paint used in the shop painting.

3.2 BEARING PLATES

Bearing plates shall be provided with full bearing after the supporting members have been plumbed and properly positioned, but prior to placing superimposed loads. The area under the plate shall be damp-packed solidly with nonshrink grout. Grout shall be as specified in Section 05120 STRUCTURAL STEEL.

-- End of Section --

SECTION TABLE OF CONTENTS

DIVISION 05 - METALS

SECTION 05310

STEEL DECKS

10/03

PART 1 GENERAL

1.1 REFERENCES
1.2 SUBMITTALS
1.3 QUALITY ASSURANCE
1.3.1 Deck Units
1.3.2 Certification of Piston Tool Operator
1.3.3 Qualification of Welders
1.3.4 Regulatory Requirements
1.3.4.1 Wind Storm Resistance
1.3.5 Fabrication Drawings
1.4 DELIVERY, STORAGE, AND HANDLING

PART 2 PRODUCTS

2.1 MATERIALS
2.1.1 Steel Sheet
2.1.2 Steel Coating
2.1.3 Recycled Content
2.2 ACCESSORIES
2.2.1 Adjusting Plates
2.2.2 End Closures
2.2.3 Partition Closures
2.2.4 Sheet Metal Collar
2.2.5 Mechanical Fasteners
2.2.6 Miscellaneous Accessories
2.3 FABRICATION
2.3.1 Deck Units
2.3.2 Roof Deck
2.3.3 Form Deck
2.3.4 Touch-Up Paint

PART 3 EXECUTION

3.1 EXAMINATION
3.2 INSTALLATION
3.2.1 Attachment
3.2.1.1 Welding
3.2.1.2 Fastening
3.2.2 Openings
3.2.3 Deck Damage
3.2.4 Accessory Installation
3.2.4.1 Adjusting Plates
3.2.4.2 End Closures
3.2.4.3 Closures Above Partitions
3.2.5 Concrete Work
3.3 FIELD QUALITY CONTROL
3.3.1 Decks Not Receiving Concrete

-- End of Section Table of Contents --

UFGS-05310 (October 2003)

SECTION 05310

STEEL DECKS
10/03

PART 1 GENERAL

1.1 REFERENCES

The publications listed below form a part of this specification to the extent referenced. The publications are referred to in the text by the basic designation only.

AMERICAN IRON AND STEEL INSTITUTE (AISI)

AISI SG-973	(1996) Cold-Formed Steel Design Manual

ASTM INTERNATIONAL (ASTM)

ASTM A 653/A 653M	(2001a) Steel Sheet, Zinc-Coated (Galvanized) or Zinc-Iron Alloy-Coated (Galvannealed) by the Hot-Dip Process
ASTM A 780	(2001) Repair of Damaged and Uncoated Areas of Hot-Dipped Galvanized Coatings

AMERICAN WELDING SOCIETY (AWS)

AWS D1.1/D1.1M	(2000) Structural Welding Code - Steel
AWS D1.3	(1998) Structural Welding Code - Sheet Steel

FM GLOBAL (FM)

FM DS 1-28	(2002) Design Wind Loads

STEEL DECK INSTITUTE (SDI)

SDI 30	(2001) Design Manual for Composite Decks, Form Decks, and Roof Decks
SDI DDM02	(1991) Diaphragm Design Manual
SDI DDP	(1987; R 2000) Deck Damages and Penetration
SDI MOC1	(1992) Manual of Construction with Steel Deck

THE SOCIETY FOR PROTECTIVE COATINGS (SSPC)

SSPC Paint 20	(2002) Zinc-Rich Coating (Type I - "Inorganic" and Type II - "Organic")

UNDERWRITERS LABORATORIES (UL)

UL 580	(1994; Rev thru Feb 1998) Tests for Uplift Resistance of Roof Assemblies

U.S. DEPARTMENT OF DEFENSE (DOD)

UFC 3-310-01	(2000) Load Assumptions for Buildings

1.2 SUBMITTALS

Government approval is required for submittals with a "G" designation; submittals not having a "G" designation are for information only or as otherwise designated. When used, a designation following the "G" designation identifies the office that will review the submittal for the Government. The following shall be submitted in accordance with Section 01330 SUBMITTAL PROCEDURES:

SD-02 Shop Drawings

Fabrication Drawings; G, AE

SD-03 Product Data

Deck Units

Accessories

Mechanical Fasteners

SD-05 Design Data

Deck Units

Submit manufacturer's design calculations, or applicable published literature for the structural properties of the proposed deck units.

SD-07 Certificates

Recycled Content

Certification and calculations attesting to the actual content of recycled material utilized in the manufacture of the structural steel in the Project

Deck Units

Accessories

Qualification of Welders

Wind Storm Resistance

1.3 QUALITY ASSURANCE

1.3.1 Deck Units

Deck units and accessories shall be products of a manufacturer regularly engaged in manufacture of steel decking. Provide manufacturer's certificates attesting that the decking material meets the specified requirements.

1.3.2 Certification of Piston Tool Operator

Manufacturer's certificate attesting that the operators are authorized to use the low velocity piston tool.

1.3.3 Qualification of Welders

Provide welder qualification procedures, welder qualifications, and duration of qualification period in accordance with AWS D1.1/D1.1M and AWS D1.3.

1.3.4 Regulatory Requirements

1.3.4.1 Wind Storm Resistance

The roof construction assembly shall be capable of withstanding an uplift pressure of 90 pounds per square foot when tested in accordance with the uplift pressure test described in the FM DS 1-28 or as described in UL 580 and in general compliance with UFC 3-310-01.

1.3.5 Fabrication Drawings

Show type and location of units, location and sequence of connections, bearing on supports, methods of anchoring, attachment of accessories, adjusting plate details, size and location of holes to be cut and reinforcement to be provided, the manufacturer's erection instructions and other pertinent details.

1.4 DELIVERY, STORAGE, AND HANDLING

Deliver deck units to the site in a dry and undamaged condition. Store and handle steel deck in a manner to protect it from corrosion, deformation, and other types of damage. Do not use decking for storage or as working platform until units have been fastened into position. Exercise care not to damage material or overload decking during construction. The maximum uniform distributed storage load shall not exceed the design live load. Stack decking on platforms or pallets and cover with weathertight ventilated covering. Elevate one end during storage to provide drainage. Maintain deck finish at all times to prevent formation of rust. Repair deck finish using touch-up paint. Replace damaged material.

PART 2 PRODUCTS

2.1 MATERIALS

2.1.1 Steel Sheet

Flat rolled carbon steel sheets of structural quality, thickness not less than indicated before coating, meeting the requirements of AISI SG-973, except as modified herein.

2.1.2 Steel Coating

ASTM A 653/A 653M designation G60 galvanized. Apply coating to both sides of sheet.

2.1.3 Recycled Content

Post-consumer recycled material shall account for 25 percent of the steel.

2.2 ACCESSORIES

Provide accessories of same material as deck, unless specified otherwise. Provide manufacturer's standard type accessories, as specified.

2.2.1 Adjusting Plates

Provide adjusting plates, or segments of deck units, of same thickness and configuration as deck units in locations too narrow to accommodate full size units. Provide factory cut plates of predetermined size where possible.

2.2.2 End Closures

Fabricated of sheet metal by the deck manufacturer. Provide end closures minimum 0.028 inch thick to close open ends at exposed edges of floors, and openings through floor deck.

2.2.3 Partition Closures

Provide closures for closing voids above interior walls and partitions that are perpendicular to the direction of the configurations. Provide rubber, plastic, or sheet steel closures above typical partitions. Provide minimum one inch thick soft composition rubber closures above walls and partitions contiguous to acoustical steel deck. Provide sheet steel closures above fire-resistant interior walls and partitions located on both sides of wall or partition.

2.2.4 Sheet Metal Collar

Where deck is cut for passage of pipes, ducts, columns, etc., and deck is to remain exposed, provide a neatly cut sheet metal collar to cover edges of deck. Do not cut deck until after installation of supplemental supports.

2.2.5 Mechanical Fasteners

Provide mechanical fasteners, such as powder actuated or pneumatically driven fasteners, for anchoring the deck to structural supports and adjoining units that are designed to meet the loads indicated. Provide positive locking-type fasteners standard with the Steel Deck Institute and the steel deck manufacturer, as approved by the Contracting Officer. Fasteners shall be approved for use in metal deck diaphragms in accordance with SDI DDM02.

2.2.6 Miscellaneous Accessories

The manufacturer's standard accessories shall be furnished as necessary to complete the deck installation. Metal accessories shall be of the same material as the deck and have minimum design thickness as follows: saddles,

0.0474 inch; welding washers, 0.0598 inch; cant strip, 0.0295 inch; other metal accessories, 0.0358 inch; unless otherwise indicated. Accessories shall include but not be limited to saddles, welding washers, fasteners, cant strips, butt cover plates, underlapping sleeves, and ridge, hip and valley plates.

2.3 FABRICATION

2.3.1 Deck Units

Deck units shall conform to SDI 30. Form and non-cellular decking and accessories shall conform to ASTM A 653/A 653M, SQ, Grade 230, Grade 33. Panels of maximum possible lengths shall be used to minimize end laps. Deck units shall be fabricated in lengths to span 3 or more supports with flush, telescoped, or nested 2 inch laps at ends, and interlocking, or nested side laps, unless otherwise indicated. Deck with cross-sectional configuration differing from the units indicated may be used, provided that the properties of the proposed units, determined in accordance with AISI SG-973, are equal to or greater than the properties of the units indicated and that the material will fit the space provided without requiring revisions to adjacent materials or systems. Floor deck system design is based on unshored construction.

2.3.2 Roof Deck

Roof deck units shall be fabricated of the steel design thickness required by the design drawings and shall be galvanized.

2.3.3 Form Deck

Deck used as formwork for concrete shall conform to ASTM A 653/A 653M. Form deck shall be fabricated of the steel design thickness required by the design drawings. Zinc-coat in conformance with ASTM A 653/A 653M, G60 coating class.

2.3.4 Touch-Up Paint

Touch-up paint for zinc-coated units shall be an approved galvanizing repair paint with a high-zinc dust content. Welds shall be touched-up with paint conforming to SSPC Paint 20 in accordance with ASTM A 780. Finish of deck units and accessories shall be maintained by using touch-up paint whenever necessary to prevent the formation of rust.

PART 3 EXECUTION

3.1 EXAMINATION

Prior to installation of decking units and accessories, examine worksite to verify that as-built structure will permit installation of decking system without modification.

3.2 INSTALLATION

Install steel deck units in accordance with SDI 30SDI DDM02 and approved shop drawings. Place units on structural supports, properly adjusted, leveled, and aligned at right angles to supports before permanently securing in place. Damaged deck and accessories including material which is permanently stained or contaminated, deformed, or with burned holes

shall not be installed. Extend deck units over three or more supports unless absolutely impractical. Report inaccuracies in alignment or leveling to the Contracting Officer and make necessary corrections before permanently anchoring deck units. Locate deck ends over supports only. Do not use unanchored deck units as a work or storage platform. Do not fill unanchored deck with concrete. Permanently anchor units placed by the end of each working day. Do not support suspended ceilings, light fixtures, ducts, utilities, or other loads by steel deck unless indicated. Loads shall be distributed by appropriate means to prevent damage.

3.2.1 Attachment

Immediately after placement and alignment, and after correcting inaccuracies, permanently fasten steel deck units to structural supports and to adjacent deck units by welding with normal 5/8 inch diameter puddle welds or fastened with screws, powder-actuated fasteners, or pneumatically driven fasteners as indicated on the design drawings and in accordance with manufacturer's recommended procedure and SDI 30. Clamp or weight deck units to provide firm contact between deck units and structural supports while performing welding or fastening. Attachment of adjacent deck units by button-punching is prohibited.

3.2.1.1 Welding

Perform welding in accordance with AWS D1.3 using methods and electrodes recommended by the manufacturers of the base metal alloys being used. Ensure only operators previously qualified by tests prescribed in AWS D1.1/D1.1M and AWS D1.3 make welds. Immediately recertify, or replace with qualified welders, welders that have passed qualification tests but are producing unsatisfactory welding. Location, size, and spacing of fastening shall be as indicated. Welding washers shall not be used except at the connections of the floor form deck to supports. Welding washers shall not be used at sidelaps. Holes and similar defects will not be acceptable. Deck ends shall be lapped 2 inches. All partial or segments of deck units shall be attached to structural supports in accordance with Section 2.5 of SDI DDM02. . Immediately clean welds by chipping and wire brushing. Heavily coat welds, cut edges and damaged portions of coated finish with zinc-dust paint conforming to ASTM A 780.

3.2.1.2 Fastening

Anchor deck to structural supports and adjoining units with mechanical deck fasteners as recommended by the Steel Deck Institute and the steel deck manufacturer, as approved by the Contracting Officer. Powder-actuated fasteners shall be driven with a low-velocity piston tool by an operator authorized by the manufacturer of the piston tool. Pneumatically driven fasteners shall be driven with a low-velocity fastening tool and shall comply with the manufacturer's recommendations.

3.2.2 Openings

All holes and openings required shall be cut or drilled holes and be coordinated with the drawings, specifications, and other trades. Frame and reinforce openings through the deck in conformance with SDI DDP. Holes and openings 6 to 12 inches across shall be reinforced by 0.0474 inch thick steel sheet at least 12 inches wider and longer than the opening and be fastened to the steel deck at each corner of the sheet and at a maximum of 6 inches on center. Holes and openings larger than 12 inches shall be reinforced by steel framing as indicated.

3.2.3 Deck Damage

SDI MOC1, for repair of deck damage.

3.2.4 Accessory Installation

3.2.4.1 Adjusting Plates

Install as shown on shop drawings.

3.2.4.2 End Closures

Provide end closure to close open ends of cells at columns, walls, and openings in deck.

3.2.4.3 Closures Above Partitions

Provide for closing voids between cells over partitions that are perpendicular to direction of cells. Provide a one-piece closure strip for partitions 4 inches nominal or less in thickness and two-piece closure strips for wider partitions. Provide sheet metal closures above fire-rated partitions at both sides of partition with space between filled with fiberglass insulation. Provide flexible rubber closures above acoustic-rated partitions at both sides of partition with space between filled with blanket insulation.

3.2.5 Concrete Work

Prior to placement of concrete, inspect installed decking to ensure that there has been no permanent deflection or other damage to decking. Replace decking which has been damaged or permanently deflected as approved by the Contracting Officer. Place concrete on metal deck in accordance with Construction Practice of SDI 30. Concrete fill over metal deck is specified in Section 03300A CAST-IN-PLACE STRUCTURAL CONCRETE.

3.3 FIELD QUALITY CONTROL

3.3.1 Decks Not Receiving Concrete

Inspect the decking top surface for distortion after installation. For roof decks not receiving concrete, verify distortion by placing a straight edge across three adjacent top flanges. The maximum allowable gap between the straight edge and the top flanges is 1/16 inch; when gap is more than 1/16 inch, provide corrective measures or replacement. Reinspect decking after performing corrective measures or replacement.

-- End of Section --

SECTION TABLE OF CONTENTS

DIVISION 05 - METALS

SECTION 05400

COLD-FORMED METAL FRAMING

10/03

PART 1 GENERAL

1.1 REFERENCES
1.2 SUBMITTALS
1.3 DELIVERY, STORAGE, AND HANDLING
1.4 LOAD-BEARING COLD-FORMED METAL FRAMING
1.5 MAXIMUM DEFLECTION
1.6 QUALITY ASSURANCE
1.6.1 Drawing Requirements
1.6.2 Design Data Required

PART 2 PRODUCTS

2.1 STEEL STUDS, JOISTS, TRACKS, BRACING, BRIDGING AND ACCESSORIES
2.1.1 Studs and Joists of 16 Gage (0.0598 Inch) and Heavier
2.1.2 Studs and Joists of 18 Gage (0.0478 Inch) and Lighter
2.1.3 Sizes, Gages, Section Modulus, and Other Structural Properties
2.2 MARKINGS
2.3 CONNECTIONS
2.4 PLASTIC GROMMETS

PART 3 EXECUTION

3.1 FASTENING
3.1.1 Welds
3.1.2 Screws
3.1.3 Anchors
3.2 INSTALLATION
3.2.1 Tracks
3.2.2 Studs
3.2.3 Rafters
3.2.4 Erection Tolerances
3.2.5 Special Inspection and Testing for Seismic-Resisting Systems

-- End of Section Table of Contents --

UFGS-05400N (October 2003)

SECTION 05400

COLD-FORMED METAL FRAMING
10/03

PART 1 GENERAL

1.1 REFERENCES

The publications listed below form a part of this specification to the extent referenced. The publications are referred to in the text by the basic designation only.

AMERICAN IRON AND STEEL INSTITUTE (AISI)

AISI SG-973	(1996) Cold-Formed Steel Design Manual
AISI SG02-1	(2001) Design of Cold-Formed Steel Structural Members

ASTM INTERNATIONAL (ASTM)

ASTM A 123/A 123M	(2002) Zinc (Hot-Dip Galvanized) Coatings on Iron and Steel Products
ASTM A 153/A 153M	(2001a) Zinc Coating (Hot-Dip) on Iron and Steel Hardware
ASTM A 370	(2002) Mechanical Testing of Steel Products
ASTM A 653/A 653M	(2002) Steel Sheet, Zinc-Coated (Galvanized) or Zinc-Iron Alloy-Coated (Galvannealed) by the Hot-Dip Process
ASTM B 633	(1998e1) Electrodeposited Coatings of Zinc on Iron and Steel
ASTM C 955	(2001) Load-Bearing (Transverse and Axial) Steel Studs, Runners (Tracks), and Bracing or Bridging for Screw Application of Gypsum Panel Products and Metal Plaster Bases
ASTM E 329	(2002) Agencies Engaged in the Testing and/or Inspection of Materials Used in Construction

AMERICAN WELDING SOCIETY (AWS)

AWS D1.3	(1998) Structural Welding Code - Sheet Steel

SOCIETY OF AUTOMOTIVE ENGINEERS INTERNATIONAL (SAE)

SAE J78	(1998) Steel Self Drilling Tapping Screws

1.2 SUBMITTALS

Government approval is required for submittals with a "G" designation; submittals not having a "G" designation are for information only or as otherwise designated. When used, a designation following the "G" designation identifies the office that will review the submittal for the Government. The following shall be submitted in accordance with Section 01330 SUBMITTAL PROCEDURES:

SD-02 Shop Drawings

Framing Components; G, AE

a. Cross sections, plans, and/or elevations showing component types and locations for each framing application; including shop coatings and material thicknesses for each framing component.

b. Connection details showing fastener type, quantity, location, and other information to assure proper installation.

c. Drawings depicting panel configuration, dimensions, components, locations, and construction sequence if the Contractor elects to install prefabricated/prefinished frames.

SD-03 Product Data

Steel studs, joists, tracks, bracing, bridging and accessories

SD-05 Design Data

Metal framing calculations; G, AE

SD-07 Certificates

Load-bearing cold-formed metal framing

Mill certificates or test reports from independent testing agency, qualified in accordance with ASTM E 329, showing that the steel sheet used in the manufacture of each cold-formed component complies with the minimum yield strengths and uncoated steel thickness specified. Test reports shall be based on the results of three coupon tests in accordance with ASTM A 370.

Welds

Certified copies of welder qualifications test records showing qualification in accordance with AWS D1.3.

1.3 DELIVERY, STORAGE, AND HANDLING

Deliver materials to job site and store in adequately ventilated, dry locations. Storage area shall permit easy access for inspection and handling. If necessary to store materials outside, stack off the ground, support on a level platform, and protect from the weather as approved. Handle materials to prevent damage. Finish of the framing members shall be

maintained at all times, using an approved high zinc dust content, galvanizing repair paint whenever necessary to prevent the formation of rust. Replace damaged items with new, as directed by the Contracting Officer.

1.4 LOAD-BEARING COLD-FORMED METAL FRAMING

Include top and bottom tracks, bracing, fastenings, and other accessories necessary for complete installation. Framing members shall have the structural properties indicated. Where physical structural properties are not indicated, they shall be as necessary to withstand all imposed loads. Design framing in accordance with AISI SG-973. Non-load-bearing metal framing, furring, and ceiling suspension systems are specified in Section 09100N, "Metal Support Assemblies." Metal suspension systems for acoustical ceilings are specified in Section 09510, "Acoustical Ceilings." Pre-engineered light gage steel trussed frames are specified in Section 05450 PRE-ENGINEERED LIGHT GAGE STEEL TRUSSED FRAMES.

1.5 MAXIMUM DEFLECTION

a. Interior Load-bearing Studs:

Deflection Criteria	Finish
L/240	Gypsum board

Wall deflections shall be computed on the basis that studs withstand all lateral forces independent of any composite action from sheathing materials. Studs abutting windows or louvers shall also be designed not to exceed 1/4 inch maximum deflection.

b. Roof Rafters:

L/240 - Live load only

1.6 QUALITY ASSURANCE

1.6.1 Drawing Requirements

Submit framing components to show sizes, thicknesses, layout, material designations, methods of installation, and accessories.

1.6.2 Design Data Required

Submit metal framing calculations to verify sizes, gages, and spacing of members and connections. Show methods and practices used in installation.

PART 2 PRODUCTS

2.1 STEEL STUDS, JOISTS, TRACKS, BRACING, BRIDGING AND ACCESSORIES

Framing components shall comply with ASTM C 955 and the following.

2.1.1 Studs and Joists of 16 Gage (0.0598 Inch) and Heavier

Galvanized steel, ASTM A 653/A 653M, SS Grade 50, G60.

2.1.2 Studs and Joists of 18 Gage (0.0478 Inch) and Lighter

Studs and Joists of 18 Gage (0.0478 Inch) and Lighter, Track, and Accessories (All Gages): Galvanized steel, ASTM A 653/A 653M, SS, Grade 50 33,000 psi G60.

2.1.3 Sizes, Gages, Section Modulus, and Other Structural Properties

Size and gage as indicated.

2.2 MARKINGS

Studs and track shall have product markings stamped on the web of the section. The markings shall be repeated throughout the length of the member at a maximum spacing of 4 feet on center and shall be legible and easily read. The product marking shall include the following:

a. An ICBO number.

b. Manufacturer's identification.

c. Minimum delivered uncoated steel thickness.

d. Protective coating designator.

e. Minimum yield strength.

2.3 CONNECTIONS

Screws for steel-to-steel connections shall be self-drilling tapping in compliance with SAE J78 of the type, size, and location as shown on the drawings. Electroplated screws shall have a Type II coating in accordance with ASTM B 633. Screws, bolts, and anchors shall be hot-dipped galvanized in accordance with ASTM A 123/A 123M or ASTM A 153/A 153M as appropriate.

2.4 PLASTIC GROMMETS

Supply plastic grommets, recommended by stud manufacturer, to protect electrical wires. Prevent metal to metal contact for plumbing pipes.

PART 3 EXECUTION

3.1 FASTENING

Fasten framing members together by welding or by using self-drilling or self-tapping screws. Electrodes and screw connections shall be as required and indicated in the design calculations.

3.1.1 Welds

All welding shall be performed in accordance with AWS D1.3, as modified by AISI SG02-1. All welders, welding operations, and welding procedures shall be qualified according to AWS D1.3. All welds shall be cleaned and coated with rust inhibitive galvanizing paint. Do not field weld materials lighter than 18 gage.

3.1.2 Screws

Screws shall be of the self-drilling self-tapping type, size, and location

shown on the drawings or approved shop drawings. Screw penetration through joined materials shall not be less than three exposed threads. Minimum spacings and edge distances for screws shall be as specified in AISI SG02-1. Screws covered by sheathing materials shall have low profile heads.

3.1.3 Anchors

Anchors shall be of the type, size, and location shown on the drawings.

3.2 INSTALLATION

3.2.1 Tracks

Provide accurately aligned runners at top and bottom of partitions. Anchor tracks as indicated in design calculations. Butt weld joints in tracks or splice with stud inserts. Fasteners shall be at least 3 inches from the edge of concrete slabs.

3.2.2 Studs

Cut studs square and set with firm bearing against webs of top and bottom tracks. Position studs vertically in tracks and space as indicated in design. Do not splice studs. Provide at least two studs at openings 2 feet wide or larger. Provide jack studs over openings, as necessary, to maintain indicated stud spacing. Provide tripled studs at corners, positioned to receive finishes. Fasten studs to top and bottom tracks by welding or screwing both flanges to the tracks. Framed wall openings shall include headers and supporting components as shown on the drawings. Headers shall be installed in all openings that are larger than the stud spacing in a wall. Provide horizontal bracing in accordance with the design calculations and AISI SG-973, consisting of, as a minimum, runner channel cut to fit between and welded to the studs or hot- or cold-rolled steel channels inserted through cutouts in web of each stud and secured to studs with welded clip angles. Bracing shall be not less than the following:

LOAD	HEIGHT	BRACING
Axial load	Up to 10 feet	Two rows at 1/3 points
	Over 10 feet	Rows 3'-4" o.c. maximum

3.2.3 Rafters

Locate each rafter directly above a stud. Rafters shall have at least 2.50 inches of bearing on steel, 4 inches on masonry, and shall be reinforced over bearings where required to prevent web crippling. Splice rafters over bearings only. Lap and weld splices as indicated. Provide manufacturer's standard bridging which shall not be less than the following:

CLEAR SPAN	BRIDGING
Up to 14 feet	One row near center
14 to 20 feet	Two rows at 1/3 points
20 to 26 feet	Three rows at 1/4 points
26 to 32 feet	Four rows at 1/5 points

Temporary bracing shall be provided and remain in place until work is permanently stabilized.

3.2.4 Erection Tolerances

a. Framing members which will be covered by finishes such as gypsum board or wallboard, shall be within the following limits:

(1) Layout of walls and partitions: 1/4 inch from intended position;

(2) Plates and runners: 1/4 inch in 8 feet from a straight line;

(3) Studs: 1/4 inch in 8 feet out of plumb, not cumulative; and

(4) Face of framing members: 1/4 inch in 8 feet from a true plane.

3.2.5 Special Inspection and Testing for Seismic-Resisting Systems

Special inspections and testing for seismic-resisting systems and components shall be done in accordance with Section 01452A SPECIAL INSPECTION FOR SEISMIC-RESISTING SYSTEMS.

-- End of Section --

SECTION TABLE OF CONTENTS

DIVISION 05 - METALS

SECTION 05450

PRE-ENGINEERED LIGHT GAUGE STEEL TRUSSED FRAMES

09/97

PART 1 GENERAL

1.1 SCOPE
1.2 REFERENCES
1.3 FABRICATOR'S QUALIFICATIONS
1.4 SUBMITTALS
1.5 DELIVERY, STORAGE AND HANDLING

PART 2 PRODUCTS

2.1 FRAMING COMPONENTS
2.1.1 Available Manufacturer
2.1.2 Design, Analysis and Computation
2.1.3 Galvanized Structural Members
2.1.4 Steel Members
2.2 FASTENERS

PART 3 EXECUTION

3.1 FABRICATION
3.2 ERECTION

-- End of Section Table of Contents --

SAVH-05450 (09/97)

SECTION 05450

PRE-ENGINEERED LIGHT GAUGE STEEL TRUSSED FRAMES
09/97

PART 1 GENERAL

1.1 SCOPE

The work under this section consists of furnishing and installing all pre-engineered light gauge trusses as shown on drawings and as specified herein including headers, outriggers, supplemental trusses and rafters for over-framing and incidental framing for a complete assembly within the extent shown on the drawings.

Pre-engineered light gauge steel trusses include planar structural units consisting of welded, screwed or bolted connected members which are fabricated, cut and assembled prior to delivery or at the job site.

Types of prefabricated trusses include:

Gable-shaped trusses.
Monopitch trusses.
Irregular shaped trusses.
Supplemental headers, studs and other incidental framed assemblies.

1.2 REFERENCES

The publications listed below form a part of this specification to the extent referenced. The publications are referred to in the text by basic designation only.

ASTM INTERNATIONAL(ASTM)

ASTM A 123/A 123M	(2002) Zinc (Hot-Dip Galvanized) Coatings on Iron and Steel Products
ASTM A 653/A 653M	(2003) Steel Sheet, Zinc-Coated (Galvanized) or Zinc-Iron Alloy-Coated (Galvannealed) by the Hot-Dip Process

1.3 FABRICATOR'S QUALIFICATIONS

Trusses shall be designed, fabricated, and erected by a firm which has a record including a minimum of 5 years of successfully fabricating trussed assemblies similar to scope required and which practices a quality control program which includes inspection by an independent inspection and testing agency.

1.4 SUBMITTALS

Government approval is required for submittals with a "G" designation; submittals not having a "G" designation are for information only. When

used, a designation following the "G" designation identifies the office that will review the submittal for the Government. The following shall be submitted in accordance with Section 01330 SUBMITTAL PROCEDURES:

SD-02 Shop Drawings

Shop Drawings; G, AE

Submit shop drawings showing shapes and dimensions of members to be used including pitch, span, camber configuration and spacing for each type or configuration of truss required. Show all bearing and anchorage details. Specify and detail all supplemental strapping, bracing clips and other accessories required for proper installation. Shop drawings shall include all placement sequences and instructions.

SD-03 Product Data

Product Data

Submit fabricator's technical data covering materials, shapes, hardware, fabrication process, handling and erection.

Design Analysis; G, AE

To the extent engineering design considerations are indicated as fabricator's responsibility, submit design analysis and test reports indicating loading, section properties, allowable stress, stress diagrams and calculations, and similar information needed for analysis and to ensure trusses comply with requirements. All designs shall bear the name and seal of a structural engineer licensed to practice in the state where trusses are to be erected.

SD-07 Certificates

Certificate of Compliance

Submit certificate, signed by an officer of fabricating firm, indicating trusses and related assemblies to be supplied for this project comply with all indicated requirements.

1.5 DELIVERY, STORAGE AND HANDLING

Handle and store truss materials and accessories, and in accordance with manufacturer's instructions to avoid damage from bending, overturning or other cause for which truss is not designed to resist or endure. Storage shall be off-ground in a dry ventilated space or protect with waterproof coverings.

Time fabrication and erection of trusses to avoid extended on-site storage and to avoid delaying work of other trades whose work must follow erection of trusses.

PART 2 PRODUCTS

2.1 FRAMING COMPONENTS

2.1.1 Available Manufacturer

Subject to compliance with requirements, framing shapes and components for

pre-engineered light gauge prefabricated steel trusses shall be as manufactured or recommended by approved manufacturer.

2.1.2 Design, Analysis and Computation

Design, analysis, and computation of section properties shall be in conformance with the specification for the Design of Cold-Formed Steel Structural Members of the American Iron and Steel Institute.

2.1.3 Galvanized Structural Members

All galvanized structural members shall be formed from steel that corresponds to the requirements of ASTM A 653/A 653M, Grade A (minimum yield of 33 ksi) for (18 gauge) steel or lighter and ASTM A 653/A 653M, Grade D (minimum yield of 50 ksi) for (16 gauge) or heavier.

2.1.4 Steel Members

All steel members shall be galvanized with a G60 coating minimum in accordance with ASTM A 123/A 123M. All truss top and bottom chord members and rafters shall be 16 gauge minimum.

2.2 FASTENERS

Framing components shall be fastened to each other by screws or welding as recommended by approved manufacturer.

PART 3 EXECUTION

3.1 FABRICATION

Light gauge steel prefabricated trusses shall be fabricated either on or off site prior to erection.

All metal framing shall be erected in accordance with the current printed instructions of the approved subcontractor or his fabricator.

All framing components shall be straight and true prior to fabrication. Flattening or straightening of components shall be done by a process not injurious to materials.

All framing components shall be cut neatly to fit squarely against abutting members.

No splices will be allowed in trusses except at joints.

Provide all angles, clips, and other miscellaneous pieces necessary to attach light gauge framing panels to building structure or to attach other materials to light gauge framing panels.

All components shall be set square in line and shall be held firmly in position until properly fastened.

All panel components shall be joined by screws or welding.

Finished assemblies shall be free from twists, bends, kinks, or open joints with all members straight, square, and true to line.

3.2 ERECTION

Prefabricated trusses shall be braced against racking. Lifting of trusses shall be done so as to not cause local distortion in any member.

All light gauge steel framing shall be erected by approved methods using equipment of adequate capacity to safely perform the work.

The Contractor is responsible for checking dimensions and assuring fit of all members and panels before erection begins.

All work shall be erected plumb and level and to dimensions, spacings and elevations indicated on drawings.

Members shall be of size and spacing shown on the approved shop drawings.

Provide web stiffeners and reinforcement at reaction points where required by analysis or to suit details.

Hoist units in place by means of lifting equipment suited to sizes and types of trusses required, applied at designated lift points as recommended by fabricator, exercising care not to damage truss members or joists by out-of-plane end or other causes.

Provide temporary bracing as required to maintain trusses plumb, parallel and in location indicated, until permanent bracing is installed.

Anchor trusses securely at all bearing points to comply with methods and details indicated.

Install permanent bracing and related components to enable trusses to maintain design spacing, withstand live and dead loads including lateral loads, and to comply with other indicated requirements.

Do not cut or remove truss members.

-- End of Section --

SECTION TABLE OF CONTENTS

DIVISION 05 - METALS

SECTION 05500A

MISCELLANEOUS METAL

01/02

PART 1 GENERAL

1.1 REFERENCES
1.2 SUBMITTALS
1.3 GENERAL REQUIREMENTS
1.4 DISSIMILAR MATERIALS
1.5 WORKMANSHIP
1.6 ANCHORAGE
1.7 ALUMINUM FINISHES
1.8 SHOP PAINTING

PART 2 PRODUCTS

2.1 ACCESS DOORS AND PANELS
2.2 CORNER GUARDS AND SHIELDS
2.3 PIPE GUARDS (BOLLARDS)
2.4 COUNTERTOP COVERS
2.5 DOWNSPOUT BOOTS
2.6 EXPANSION JOINT COVERS
2.7 DELETED
2.8 GATES
2.8.1 Vertical Panels
2.8.2 Frame Members
2.8.3 Posts and Hardware
2.8.3.1 Finishes
2.8.3.2 Design Standard
2.9 HANDRAILS AND GUARDRAILS
2.9.1 Steel Handrails and Guardrails, Including Carbon Steel Inserts
2.10 MISCELLANEOUS
2.10.1 Hanging Rods
2.10.2 Supports
2.10.2.1 Projector Support Structure
2.11 ROLL-UP FLOOR MATS (WALK-OFF MATS)
2.12 SAFETY NOSING
2.13 VENTILATED SHELVING
2.14 STEEL STAIRS
2.15 FIRE EXTINGUISHER AND CABINETS

PART 3 EXECUTION

3.1 GENERAL INSTALLATION REQUIREMENTS
3.2 REMOVABLE ACCESS PANELS
3.3 INSTALLATION OF PIPE GUARDS
3.4 INSTALLATION OF DOWNSPOUT BOOTS
3.5 DELETED
3.6 ATTACHMENT OF HANDRAILS AND GUARDRAILS
3.6.1 Installation of Steel Handrails
3.7 RECESSED FLOOR MATS

3.8 INSTALLATION OF SAFETY NOSINGS
3.9 INSTALLATION OF FIRE EXTINGUISHER CABINETS

-- End of Section Table of Contents --

UFGS-05500A (January 2002)

SECTION 05500A

MISCELLANEOUS METAL
01/02

PART 1 GENERAL

1.1 REFERENCES

The publications listed below form a part of this specification to the extent referenced. The publications are referred to in the text by basic designation only.

ALUMINUM ASSOCIATION (AA)

AA DAF-45	(1997) Designation System for Aluminum Finishes

ASTM INTERNATIONAL (ASTM)

ASTM A 123/A 123M	(2001) Zinc (Hot-Dip Galvanized) Coatings on Iron and Steel Products
ASTM A 36/A 36M	(2000a) Carbon Structural Steel
ASTM A 446	(1989) Specification for Steel sheet, Zinc Coated (Galvanized) by the Hot-Dip Process, Physical (Structural) Quality Grade A, Fy = 230 MPa (33 ksi): 1.21 mm (18 gauge) and lighter Grade D, Fy = 345 MPa (50 ksi): 1.52 mm (16 gauge) and heavier Grade E, Fy = 550 MPa (80 ksi) Galvanizing: G60 and G90 coating class
ASTM A 500	(1999) Cold-Formed Welded and Seamless Carbon Steel Structural Tubing in Rounds and Shapes
ASTM A 53/A 53M	(2001) Pipe, Steel, Black and Hot-Dipped, Zinc-Coated, Welded and Seamless
ASTM A 653/A 653M	(2000) Steel Sheet, Zinc-Coated (Galvanized) or Zinc-Iron Alloy-Coated (Galvannealed) by the Hot-Dip Process
ASTM A 666	(2000) Annealed or Cold-Worked Austenitic Stainless Steel Sheet, Strip, Plate, and Flat Bar
ASTM A 924/A 924M	(1999) General Requirements for Steel Sheet, Metallic-Coated by the Hot-Dip

	Process
ASTM E 814	(2000) Fire Tests of Through-Penetration Fire Stops

AMERICAN WELDING SOCIETY (AWS)

AWS D1.1/D1.1M	(2000) Structural Welding Code - Steel

NATIONAL FIRE PROTECTION ASSOCIATION (NFPA)

NFPA 10	(1998; Errata 10-98-1) Portable Fire Extinguishers

U.S. GENERAL SERVICES ADMINISTRATION (GSA)

CID A-A-344	(Rev B) Lacquer, Clear Gloss, Exterior, Interior

1.2 SUBMITTALS

Government approval is required for submittals with a "G" designation; submittals not having a "G" designation are for information only. When used, a designation following the "G" designation identifies the office that will review the submittal for the Government. The following shall be submitted in accordance with Section 01330 SUBMITTAL PROCEDURES:

SD-02 Shop Drawings

Miscellaneous Metal Items

Detail drawings indicating material thickness, type, grade, and class; dimensions; and construction details. Drawings shall include catalog cuts, erection details, manufacturer's descriptive data and installation instructions, and templates. Detail drawings for the following items: Corner guards and shields, bollards, countertop covers, gates, handrails and guardrails, miscellaneous framing and supports, and steel stairs.

SD-03 Product Data

Peovide manufactirer's catalog data and installation instructions for the following: Access doors and frames, downspout boots, expansion joint covers, safety nosings, ventilated shelving, and fire extinguisher cabinets.

1.3 GENERAL REQUIREMENTS

The Contractor shall verify all measurements and shall take all field measurements necessary before fabrication. Welding to or on structural steel shall be in accordance with AWS D1.1/D1.1M. Items specified to be galvanized, when practicable and not indicated otherwise, shall be hot-dip galvanized after fabrication. Galvanizing shall be in accordance with ASTM A 123/A 123M, ASTM A 653/A 653M, or ASTM A 924/A 924M, as applicable. Exposed fastenings shall be compatible materials, shall generally match in color and finish, and shall harmonize with the material to which fastenings are applied. Materials and parts necessary to complete each item, even though such work is not definitely shown or specified, shall be included. Poor matching of holes for fasteners shall be cause for rejection.

Fastenings shall be concealed where practicable. Thickness of metal and details of assembly and supports shall provide strength and stiffness. Joints exposed to the weather shall be formed to exclude water.

1.4 DISSIMILAR MATERIALS

Where dissimilar metals are in contact, or where aluminum is in contact with concrete, mortar, masonry, wet or pressure-treated wood, or absorptive materials subject to wetting, the surfaces shall be protected with a coat of bituminous paint or asphalt varnish.

1.5 WORKMANSHIP

Miscellaneous metalwork shall be well formed to shape and size, with sharp lines and angles and true curves. Drilling and punching shall produce clean true lines and surfaces. Welding shall be continuous along the entire area of contact except where tack welding is permitted. Exposed connections of work in place shall not be tack welded. Exposed welds shall be ground smooth. Exposed surfaces of work in place shall have a smooth finish, and unless otherwise approved, exposed riveting shall be flush. Where tight fits are required, joints shall be milled. Corner joints shall be coped or mitered, well formed, and in true alignment. Work shall be accurately set to established lines and elevations and securely fastened in place. Installation shall be in accordance with manufacturer's installation instructions and approved drawings, cuts, and details.

1.6 ANCHORAGE

Anchorage shall be provided where necessary for fastening miscellaneous metal items securely in place. Anchorage not otherwise specified or indicated shall include slotted inserts made to engage with the anchors, expansion shields, and power-driven fasteners when approved for concrete; toggle bolts and through bolts for masonry; machine and carriage bolts for steel; and lag bolts and screws for wood.

1.7 ALUMINUM FINISHES

Unless otherwise specified, aluminum items shall have anodized finish. The thickness of the coating shall be not less than that specified for protective and decorative type finishes for items used in interior locations or architectural Class I type finish for items used in exterior locations in AA DAF-45. Items to be anodized shall receive a polished satin finish. Aluminum surfaces to be in contact with plaster or concrete during construction shall be protected with a field coat conforming to CID A-A-344.

1.8 SHOP PAINTING

Surfaces of ferrous metal except galvanized surfaces, shall be cleaned and shop coated with the manufacturer's standard protective coating unless otherwise specified. Surfaces of items to be embedded in concrete shall not be painted. Items to be finish painted shall be prepared according to manufacturer's recommendations or as specified.

PART 2 PRODUCTS

2.1 ACCESS DOORS AND PANELS

Doors and panels shall be flush type unless otherwise indicated. Frames

for access doors shall be fabricated of not lighter than 16 gauge steel with welded joints and finished with anchorage for securing into construction. Access doors shall be a minimum of 14 by 20 inches and of not lighter than 14 gauge steel, with stiffened edges, complete with attachments. Access doors shall be hinged to frame and provided with a flush face, screw driver operated latch. Exposed metal surfaces shall have a baked enamel finish.

2.2 CORNER GUARDS AND SHIELDS

Corner guards and shields for jambs and sills of openings and edges of platforms shall be steel shapes and plates anchored in masonry or concrete with welded steel straps or end weld stud anchors. Corner guards for use with glazed or ceramic tile finish elsewhere and as indicated on walls shall be formed of 0.0625 inch thick corrosion-resisting steel with polished or satin finish, shall extend 5 feet above the top of cove base or to the top of the wainscot, whichever is less, and shall be securely anchored to the supporting wall. Corner guards on exterior shall be galvanized.

2.3 PIPE GUARDS (BOLLARDS)

Pipe guards shall be extra-heavy duty steel pipe conforming to ASTM A 53/A 53M, Type E or S, weight XS, black finish.

2.4 COUNTERTOP COVERS

Countertop covers where indicated shall be brake-formed from 18 gage stainless steel conforming to ASTM A 666,Type 304. Cover shall be fastened to wood substrate with concealed countersunk stainless steel screws.

2.5 DOWNSPOUT BOOTS

Downspout boots shall be cast iron with receiving bells sized to fit downspouts.

2.6 EXPANSION JOINT COVERS

Expansion joint covers shall be constructed of extruded aluminum with anodized satin finish for walls and ceilings and with standard mill finish for floor covers and exterior covers. Plates, backup angles, expansion filler strip and anchors shall be designed as indicated. Expansion joint system shall provide a 2 hour fire rating and movement as indicated. Indicated expansion joints shall be designed and fabricated for seismic conditions.

*2

2.7 ~~FLAGPOLE~~DELETED

~~2.7.1 Pole Construction, General~~

~~Construct poles and ship to Project site in one piece, if possible. If more than one piece is necessary, provide snug-fitting, weathertight, hairline joints.~~

~~2.7.1.1 Aluminum Flagpoles~~

~~Aluminum flagpoles shall be cone-tapered and fabricated from seamless, extruded tubing complying with ASTM B 241 (ASTM B 241M), alloy 6063, with a minimum wall thickness of 0.188 inch, heat treated after fabrication to~~

~~comply with ASTM B 597, temper T. Nominal height of pole above grade shall be 20 feet.~~

~~2.7.2 Baseplate~~

~~Cast metal shoe base of same metal and finish as flagpole, and furnished with anchor bolts for mounting.~~

2.8 GATES

Gates for mechanical equipment, and dumpster enclosures shall as far as practicable, match the existing gates or nearby buildings. Gates shall be constructed of roll-formed hat-shaped pickets assembled alternately on either side of a horizontal rail system, including diagonal bracing for swing gates.

2.8.1 Vertical Panels

Vertical panels shall be 5 inches wide by 1-1/4 inches deep after forming. Material shall be ASTM A 446 Grade E steel, 0.170 inch thick minimum, hot dip galvanized to G90 Class.

2.8.2 Frame Members

Frame members shall be 0.074 inch thick steel cold-formed channels, 1-1/4 by 1-1/2 inches. Top channel shall be same material as vertical panels.

2.8.3 Posts and Hardware

Posts shall be ASTM A 53 steel pipe, nominal 4 inch diameter, Schedule 40, galvanized, with cast or ductile iron top cap. Hinges shall be manufacturer's standard for size of gate. Each leaf shall be provided with drop rod, configured to accept padlock accessible from outside the enclosure.

2.8.3.1 Finishes

Finishes of all components shall be factory applied 2-coat fluoropolymer, 1.0 mil total thickness. Color shall be as indicated.

2.8.3.2 Design Standard

Gate shall be similar and equivalent to Privacy Panel Gate by ROHN.

2.9 HANDRAILS AND GUARDRAILS

Handrails and guardrails shall be designed to resist a concentrated load of 200 pounds in any direction at any point of the top of the rail or 20 pounds per foot applied horizontally to top of the rail, whichever is more severe.

2.9.1 Steel Handrails and Guardrails, Including Carbon Steel Inserts

Steel railings, including inserts in concrete, shall be steel pipe conforming to ASTM A 53/A 53M or structural tubing conforming to ASTM A 500, Grade A or B of equivalent strength. Steel railings shall be 1-1/2 inch nominal size. Railings shall be hot-dip galvanized. Pipe collars shall be hot-dip galvanized steel.

a. Joint posts, rail, and corners shall be fabricated by one of the following methods:

(1) Flush type rail fittings of commercial standard, welded and ground smooth with railing splice locks secured with 3/8 inch hexagonal recessed-head setscrews.

(2) Mitered and welded joints by fitting post to top rail and intermediate rail to post, mitering corners, groove welding joints, and grinding smooth. Railing splices shall be butted and reinforced by a tight fitting interior sleeve not less than 6 inches long.

(3) Railings may be bent at corners in lieu of jointing, provided bends are made in suitable jigs and the pipe is not crushed.

b. Removable sections, toe-boards, and brackets shall be provided as indicated.

c. Railing infill panels shall be constructed of woven steel wire in frames of hot-rolled or cold-formed steel shapes. Woven-wire panels shall be of 8 gauge, 2-inch mesh secured through weaving bar to 3/8 inch round or 1 inch channel frame. Corners of frames shall be mitered and welded or mortised and tenoned.

2.10 MISCELLANEOUS

Miscellaneous plates and shapes for items that do not form a part of the structural steel framework, such as lintels, sill angles, miscellaneous mountings, and frames, shall be provided to complete the work.

2.10.1 Hanging Rods

Hanging rods shall be provided where indicated. Rods shall be stainless steel pipe or tubing 1-1/2 inches in diameter. Rods shall be set parallel with the floor, and shall be supported at each end by suitable sockets, and by intermediate brackets spaced at not more than 4 foot centers.

2.10.2 Supports

Provide supporting structures as shown for such items as toilet partitions and urinal screens, monitors and projectors, projection screens, and operable partitions.

2.10.2.1 Projector Support Structure

Commercial support system utilizing single mast mounted through ceiling to structure above, complete with all necessary braces and stabilizer bars for fully functioning installation.

2.11 ROLL-UP FLOOR MATS (WALK-OFF MATS)

Roll-up mats shall be of aluminum construction with abrasive surface. Roll-up mats shall be for use in recessed area. Construction details of recessed areas shall be shown on the drawings.

2.12 SAFETY NOSING

Safety nosings shall be of cast or extruded aluminum with plain, abrasive

surface. Nosing shall be 3 inches wide and terminating at not more than 6 inches from the ends of treads, except nosing for metal pan cement-filled treads shall extend the full length of the tread. Safety nosings shall be provided with anchors not less than 3/4 inch long. Integrally cast mushroom anchors are not acceptable.

2.13 VENTILATED SHELVING

Ventilated shelving shall be a complete modular system of epoxy-coated wire shelves, with brackets, clips and anchors as necessary for a complete and functioning installation. Shelf assemblies shall be designed for a load capacity of 110 kg per meter for a nominal deep- shelf.

2.14 STEEL STAIRS

Steel stairs shall be complete with structural or formed channel stringers, metal pan cement-filled treads, landings, columns, handrails, and necessary bolts and other fastenings as indicated. Structural steel shall conform to ASTM A 36/A 36M. Stairs and accessories shall be galvanized. Risers on stairs with metal pan treads shall be deformed to form a sanitary cove to retain the tread concrete. Integral nosings shall have braces extended into the concrete fill.

2.15 FIRE EXTINGUISHER AND CABINETS

Fire extinguishers shall be UL-rated 20A; 120B; C (20 lb.). Cabinets to be located in fire-rated walls shall be fire-rated type, fabricated in accordance with ASTM E 814, and shall be listed by an approved testing agency for 1- and 2-hour combustible and non-combustible wall systems. The testing agency's seal shall be affixed to each fire-rated cabinet. Cabinets shall be of the semi-recessed type suitable for 20 pound extinguishers. Box and trim shall be of heavy gage rolled steel. Door shall be a rigid frame with full length piano type hinge and double strength (DSA) glass panel. Door and panel shall have the manufacturer's standard white baked enamel finish inside and out.

PART 3 EXECUTION

3.1 GENERAL INSTALLATION REQUIREMENTS

All items shall be installed at the locations shown and according to the manufacturer's recommendations. Items listed below require additional procedures as specified.

3.2 REMOVABLE ACCESS PANELS

A removable access panel not less than 12 by 12 inches shall be installed directly below each valve, flow indicator, damper, or air splitter that is located above the ceiling, other than an acoustical ceiling, and that would otherwise not be accessible.

3.3 INSTALLATION OF PIPE GUARDS

Pipe guards shall be set vertically in concrete piers. Piers shall be constructed of, and the hollow cores of the pipe filled with, concrete specified in Section 03300A CAST-IN-PLACE STRUCTURAL CONCRETE.

3.4 INSTALLATION OF DOWNSPOUT BOOTS

Downspouts shall be secured to building through integral lips with appropriate fasteners.

*2

3.5 ~~INSTALLATION OF FLAGPOLE~~DELETED

~~Baseplate Installation: Install baseplate on washers placed over leveling nuts on anchor bolts and adjust until flagpole is plumb. After flagpole is plumb, tighten retaining nuts and fill space under baseplate solidly with nonshrink, nonmetallic grout. Finish exposed grout surfaces smooth and slope 45 deg rees away from edges of baseplate.~~

3.6 ATTACHMENT OF HANDRAILS AND GUARDRAILS

Toeboards and brackets shall be installed where indicated. Splices, where required, shall be made at expansion joints. Removable sections shall be installed as indicated.

3.6.1 Installation of Steel Handrails

Installation shall be base plates welded to stringers or structural steel framework or embedded steel plates. Rail ends shall be secured by steel pipe flanges anchored by expansion shields and bolts.

3.7 RECESSED FLOOR MATS

Contractor shall verify field measurements prior to releasing materials for fabrication by the manufacturer. A mat frame shall be used to ensure recess accuracy in size, shape and depth. Drain pit shall be formed by blocking out concrete when frames are installed. Pit shall be dampproofed after concrete has set. Frames shall be assembled onsite and installed so that upper edge will be level with finished floor surface. A cement base shall be screeded inside the mat recess frame area using the edge provided by the frame as a guide. The frame shall be anchored into the cement with anchor pins a minimum of 24 inches on centers.

3.8 INSTALLATION OF SAFETY NOSINGS

Nosing shall be completely embedded in concrete before the initial set of the concrete occurs and shall finish flush with the top of the concrete surface.

3.9 INSTALLATION OF FIRE EXTINGUISHER CABINETS

Metal fire extinguisher cabinets shall be furnished and installed in accordance with NFPA 10 where shown on the drawings or specified.

-- End of Section --

SECTION TABLE OF CONTENTS

DIVISION 06 - WOOD AND PLASTICS

SECTION 06100A

ROUGH CARPENTRY

02/02

PART 1 GENERAL

1.1 REFERENCES
1.2 SUBMITTALS
1.3 DELIVERY AND STORAGE

PART 2 PRODUCTS

2.1 CERTIFIED WOOD
2.2 LUMBER
2.2.1 Grading and Marking
2.2.1.1 Lumber Products
2.2.2 Sizes
2.2.3 Treatment
2.2.3.1 Lumber
2.2.3.2 Plywood
2.2.4 Moisture Content
2.2.5 Fire-Retardant Treatment
2.2.6 Subflooring
2.2.6.1 Plywood
2.2.6.2 Wood Structural Panels
2.2.7 Miscellaneous Wood Members
2.2.7.1 Nonstress Graded Members
2.2.7.2 Blocking
2.2.7.3 Rough Bucks and Frames
2.3 ACCESSORIES AND NAILS
2.3.1 Anchor Bolts
2.3.2 Bolts: Lag, Toggle, and Miscellaneous Bolts and Screws
2.3.3 Clip Angles
2.3.4 Expansion Shields
2.3.5 Nails and Staples
2.4 INSULATION
2.4.1 Batt or Blanket
2.4.1.1 Glass Fiber Batts and Rolls

PART 3 EXECUTION

3.1 INSTALLATION OF FRAMING
3.1.1 General
3.2 INSTALLATION OF MISCELLANEOUS WOOD MEMBERS
3.2.1 Blocking
3.2.2 Nailers and Nailing Strips
3.2.3 Wood Grounds
3.2.4 Furring Strips
3.2.5 Rough Bucks and Frames
3.3 INSTALLATION OF INSULATION
3.4 TABLES

-- End of Section Table of Contents --

UFGS-06100A (February 2002)

SECTION 06100A

ROUGH CARPENTRY
02/02

PART 1 GENERAL

1.1 REFERENCES

The publications listed below form a part of this specification to the extent referenced. The publications are referred to in the text by basic designation only.

AMERICAN FOREST & PAPER ASSOCIATION (AF&PA)

AF&PA T101	(1991; Supple 1993; Addenda Apr 1997; Supple T02) National Design Specification for Wood Construction
AF&PA T11	(1988) Manual for Wood Frame Construction

AMERICAN INSTITUTE OF TIMBER CONSTRUCTION (AITC)

AITC 111	(1979) Recommended Practice for Protection of Structural Glued Laminated Timber During Transit, Storage and Erection

AMERICAN SOCIETY FOR TESTING AND MATERIALS (ASTM)

ASTM A 307	(2000) Carbon Steel Bolts and Studs, 60 000 PSI Tensile Strength
ASTM C 518	(1998) Steady-State Heat Flux Measurements and Thermal Transmission Properties by Means of the Heat Flow Meter Apparatus
ASTM C 665	(1998) Mineral-Fiber Blanket Thermal Insulation for Light Frame Construction and Manufactured Housing
ASTM D 2898	(1994; R 1999) Accelerated Weathering of Fire-Retardant-Treated Wood for Fire Testing
ASTM F 547	(1977; R 1995) Definitions of Terms Relating to Nails for Use with Wood and Wood-Based Materials

AMERICAN WOOD-PRESERVERS' ASSOCIATION (AWPA)

AWPA C2	(2000) Lumber, Timber, Bridge Ties and Mine Ties - Preservative Treatment by Pressure Processes
AWPA C20	(1999) Structural Lumber Fire-Retardant

	Pressure Treatment
AWPA C27	(1999) Plywood - Fire-Retardant Pressure Treatment
AWPA C9	(1997) Plywood - Preservative Treatment by Pressure Processes
AWPA M4	(1999) Standard for the Care of Preservative-Treated Wood Products
AWPA P5	(2000) Standards for Waterborne Preservatives

APA - THE ENGINEERED WOOD ASSOCIATION (APA)

APA EWS R540C	(1996) Builder Tips Proper Storage and Handling of Glulam Beams
APA E445R	(1980; Rev Jan 1996) Performance Standards and Policies for Structural-Use Panels

FACTORY MUTUAL ENGINEERING AND RESEARCH (FM)

FM LPDS 1-49	(1995) Loss Prevention Data Sheet - Perimeter Flashing

NATIONAL HARDWOOD LUMBER ASSOCIATION (NHLA)

NHLA Rules	(1994) Rules for the Measurement & Inspection of Hardwood & Cypress

NORTHEASTERN LUMBER MANUFACTURERS ASSOCIATION (NELMA)

NELMA Grading Rules	(1997) Standard Grading Rules for Northeastern Lumber

REDWOOD INSPECTION SERVICE (RIS)

RIS Grade Use	(1997) Grades of California Redwood Lumber

SOUTHERN CYPRESS MANUFACTURERS ASSOCIATION (SCMA)

SCMA Spec	(1986; Supple No. 1, Aug 1993) Standard Specifications for Grades of Southern Cypress

SOUTHERN PINE INSPECTION BUREAU (SPIB)

SPIB 1003	(1994; Supple 8 thru 11) Standard Grading Rules for Southern Pine Lumber

U.S. DEPARTMENT OF COMMERCE (DOC)

PS1	(1995) Construction and Industrial Plywood
PS2	(1993) Wood-Base Structural-Use Panels

WEST COAST LUMBER INSPECTION BUREAU (WCLIB)

WCLIB 17	(1996; Supp. VII & VIII) Standard Grading and Dressing Rules for Douglas Fir, Western Hemlock, Western Red Cedar, White Fir, Sitka Spruce Lumber

WESTERN WOOD PRODUCTS ASSOCIATION (WWPA)

WWPA Grading Rules	(1999) Western Lumber Grading Rules 95

1.2 SUBMITTALS

Government approval is required for submittals with a "G" designation; submittals not having a "G" designation are for information only. When used, a designation following the "G" designation identifies the office that will review the submittal for the Government. The following shall be submitted in accordance with Section 01330 SUBMITTAL PROCEDURES:

SD-07 Certificates

Grading and Marking

Manufacturer's certificates (approved by an American Lumber Standards approved agency) attesting that lumber and material not normally grade marked meet the specified requirements. Certificate of Inspection for grade marked material by an American Lumber Standards Committee (ALSC) recognized inspection agency prior to shipment.

Insulation

Certificate attesting that the cellulose, perlite, glass and mineral fiber,glass mat gypsum roof board, polyurethane, or polyisocyanurate insulation furnished for the project contains recovered material, and showing an estimated percent of such recovered material.

Certified Wood;G, RO

*2

Certificate attesting to percentage (50 minimum)of use of certified wood in wood under this section.

1.3 DELIVERY AND STORAGE

Materials shall be delivered to the site in undamaged condition, stored off ground in fully covered, well ventilated areas, and protected from extreme changes in temperature and humidity. Laminated timber shall be handled and stored in accordance with AITC 111 or APA EWS R540C.

PART 2 PRODUCTS

*2

2.1 CERTIFIED WOOD

The term "certified wood" denotes forest products incorporated into lumber and panel products that is either regionally harvested or produced in managed forests, as specified in Section 01335 SUSTAINABLE DESIGN AND DEVELOPMENT and Section 01670 RECYCLED / RECOVERED MATERIALS.

2.2 LUMBER

2.2.1 Grading and Marking

Wood Wood

At least 50 percent of wood and wood products shall be locally harvested or from managed forests and be certified as such.

2.2.1.1 Lumber Products

Solid sawn and finger-jointed lumber shall bear an authorized gradestamp or grademark recognized by ALSC, or an ALSC recognized certification stamp, mark, or hammerbrand. Surfaces that are to be exposed to view shall not bear grademarks, stamps, or any type of identifying mark. Hammer marking will be permitted on timbers when all surfaces will be exposed to view.

2.2.2 Sizes

Lumber and material sizes shall conform to requirements of the rules or standards under which produced. Unless otherwise specified, lumber shall be surfaced on four sides. Unless otherwise specified, sizes indicated are nominal sizes, and actual sizes shall be within manufacturing tolerances allowed by the standard under which the product is produced.

2.2.3 Treatment

Exposed areas of treated wood that are cut or drilled after treatment shall receive a field treatment in accordance with AWPA M4. Items of all-heart material of cedar, cypress, or redwood will not require preservative treatment, except when in direct contact with soil. Except as specified for all-heart material of the previously mentioned species, the following items shall be treated:

a. Wood members in contact with or within 18 inches of soil.

b. Wood members in contact with water.

c. Wood members exposed to the weather and those used in roofing systems or as nailing strips or nailers over fiberboard or gypsum-board wall sheathing as a base for wood siding.

d. Wood members set into concrete regardless of location, including flush-with-deck wood nailers for roofs.

e. Wood members in contact with concrete that is in contact with soil or water or that is exposed to weather.

2.2.3.1 Lumber

Lumber shall be treated in accordance with AWPA C2 with waterborne preservatives listed in AWPA P5 to a retention level as follows:

a. 0.25 pcf intended for above ground use.

b. 0.40 pcf intended for ground contact and fresh water use.

2.2.3.2 Plywood

Plywood shall be treated in accordance with AWPA C9 with waterborne preservatives listed in AWPA P5 to a retention level as follows:

a. 0.25 pcf intended for above ground use.

b. 0.40 pcf intended for ground contact and fresh water use.

2.2.4 Moisture Content

At the time lumber and other materials are delivered and when installed in the work their moisture content shall be as follows:

a. Treated and Untreated Lumber: 4 inches or less, nominal thickness, 19 percent maximum. 5 inches or more, nominal thickness, 23 percent maximum in a 3 inch perimeter of the timber cross-section.

b.. Materials Other Than Lumber: In accordance with standard under which product is produced.

2.2.5 Fire-Retardant Treatment

Fire-retardant treated wood shall be pressure treated in accordance with AWPA C20 for lumber and AWPA C27 for plywood. Material use shall be defined in AWPA C20 and AWPA C27 for Interior Type A and Exterior Type. Treatment and performance inspection shall be by an independent and qualified testing agency that establishes performance ratings. Each piece or bundle of treated material shall bear identification of the testing agency to indicate performance in accordance with such rating. Treated materials to be exposed to rain wetting shall be subjected to an accelerated weathering technique in accordance with ASTM D 2898 prior to being tested for compliance with AWPA C20 or AWPA C27. Items to be treated are indicated on the drawings.

2.2.6 Subflooring

2.2.6.1 Plywood

Plywood shall conform to PS1, APA E445R or PS2; Grade C-D or Sheathing grade with exterior glue for uses not otherwise specified; Grade C-D or sheathing grade with exterior glue for reception of underlayment or wood flooring; underlayment grade with exterior glue, or C-C (plugged) exterior grade for use as a combination subfloor-underlayment under resilient flooring. Minimum span rating for subflooring shall be 24/16 for supports 16 inches on center, and 48/24 for supports 24 inches on center. Minimum span rating for combination subfloor-underlayment shall be 16/O for supports 16 inches on center and 24/O for supports at 24 inches on center.

2.2.6.2 Wood Structural Panels

Rated wood structural panels shall be qualified for subflooring or combination subfloor-underlayment under APA E445R or PS2. Subflooring shall be rated sheathing with a span rating of 24/16 or greater for supports 16 inches on center and shall have span rating of 48/24 or greater for supports 24 inches on center. Combination subfloor-underlayment shall have a span rating of 16/O or greater for supports 16 inches on center and shall have span rating for 24/O or greater for supports 24 inches on center.

2.2.7 Miscellaneous Wood Members

2.2.7.1 Nonstress Graded Members

Members shall include bridging, corner bracing, furring, grounds, and nailing strips. Members shall be in accordance with TABLE I for the species used. Sizes shall be as follows unless otherwise shown:

Member	Size (inch)
Bridging	1 x 3 or 1 x 4 for use between members 2 x 12 and smaller; 2 x 4 for use between members larger than 2 x 12.
Corner bracing	1 x 4.
Furring	1 x 2 .
Grounds	Plaster thickness by 1-1/2.
Nailing strips	1 x 3 or 1 x 4 when used as shingle base or interior finish, otherwise 2 inch stock.

2.2.7.2 Blocking

Blocking shall be standard or number 2 grade.

2.2.7.3 Rough Bucks and Frames

Rough bucks and frames shall be straight standard or number 2 grade.

2.3 ACCESSORIES AND NAILS

Markings shall identify both the strength grade and the manufacturer. Accessories and nails shall conform to the following:

2.3.1 Anchor Bolts

ASTM A 307, size as indicated, complete with nuts and washers.

2.3.2 Bolts: Lag, Toggle, and Miscellaneous Bolts and Screws

Type, size, and finish best suited for intended use. Finish options include zinc compounds, cadmium, and aluminum paint impregnated finishes.

2.3.3 Clip Angles

Steel, 3/16 inch thick, size best suited for intended use; or zinc-coated steel or iron commercial clips designed for connecting wood members.

2.3.4 Expansion Shields

Type and size best suited for intended use.

2.3.5 Nails and Staples

ASTM F 547, size and type best suited for purpose; staples shall be as recommended by the manufacturer of the materials to be joined. For sheathing and subflooring, length of nails shall be sufficient to extend 1 inch into supports. In general, 8-penny or larger nails shall be used for nailing through 1 inch thick lumber and for toe nailing 2 inch thick lumber; 16-penny or larger nails shall be used for nailing through 2 inch thick lumber. Nails used with treated lumber and sheathing shall be galvanized. Nailing shall be in accordance with the recommended nailing schedule contained in AF&PA T11. Where detailed nailing requirements are not specified, nail size and spacing shall be sufficient to develop an adequate strength for the connection. The connection's strength shall be verified against the nail capacity tables in AF&PA T101. Reasonable judgement backed by experience shall ensure that the designed connection will not cause the wood to split. If a load situation exceeds a reasonable limit for nails, a specialized connector shall be used.

2.4 INSULATION

Thermal resistance of insulation shall be not less than the R-values shown. R-values shall be determined at 75 degrees F in accordance with ASTM C 518. Contractor shall comply with EPA requirements in conformance with Section 01670 RECYCLED / RECOVERED MATERIALS. Insulation shall be the standard product of a manufacturer and factory marked or identified with manufacturer's name or trademark and R-value. Identification shall be on individual pieces or individual packages. Materials containing more than one percent asbestos will not be allowed.

2.4.1 Batt or Blanket

2.4.1.1 Glass Fiber Batts and Rolls

Glass fiber batts and rolls shall conform to ASTM C 665, Type II kraft faced insulation. Insulation shall have a 10 mil thick, white, puncture resistant woven-glass cloth with vinyl facing on one side. Width and length shall suit construction conditions.

PART 3 EXECUTION

3.1 INSTALLATION OF FRAMING

3.1.1 General

General framing shall be in accordance with AF&PA T11.Members shall be closely fitted, accurately set to required lines and levels, and rigidly secured in place. Members shall be framed for passage of ducts. Members shall be cut, notched, or bored in accordance with applicable requirements of AF&PA T101 for the passage of pipes, wires, or conduits. Rafters, purlins, and joists shall be set with crown edge up. Framing shall be kept at least 2 inches away from chimneys and 4 inches away from fireplace backwalls. When joists, beams, and girders are placed on masonry or concrete, a wood base plate shall be positioned and leveled with grout. The joist, beam, or girder shall then be placed on the plate. When joists, beams, and girders are set into masonry or concrete, a pocket shall be formed into the wall. The joist, beam, or girder shall then be placed into the pocket and leveled with a steel shim.

3.2 INSTALLATION OF MISCELLANEOUS WOOD MEMBERS

3.2.1 Blocking

Blocking shall be provided as necessary for application of siding, sheathing, subflooring, wallboard, and other materials or building items, and to provide firestopping. Blocking for firestopping shall ensure a maximum dimension of 8 feet for any concealed space. Blocking shall be cut to fit between framing members and rigidly nailed thereto.

3.2.2 Nailers and Nailing Strips

Nailers and nailing strips shall be provided as necessary for the attachment of finish materials. Nailers used in conjunction with roof deck installation shall be installed flush with the roof deck system. Stacked nailers shall be assembled with spikes or nails spaced not more than 18 inches on center and staggered. Beginning and ending nails shall not be more than 6 inches for nailer end. Ends of stacked nailers shall be offset approximately 12 inches in long runs and alternated at corners. Anchors shall extend through the entire thickness of the nailer. Strips shall be run in lengths as long as practicable, butt jointed, cut into wood framing members when necessary, and rigidly secured in place. Nailers and nailer installation for Factory Mutual wind uplift rated roof systems specified in other Sections of these specifications shall conform to the recommendations contained in FM LPDS 1-49.

3.2.3 Wood Grounds

Wood grounds shall be provided as necessary for attachment of trim, finish, and other work to plaster. Grounds shall be run in lengths as long as practicable, butt jointed, and rigidly secured in place.

3.2.4 Furring Strips

Furring strips shall be provided at the locations shown. Furring strips shall be installed at 16 inches on center unless otherwise shown, run in lengths as long as practicable, butt jointed and rigidly secured in place.

3.2.5 Rough Bucks and Frames

Rough bucks shall be set straight, true, and plumb, and secured with anchors near top and bottom of each wood member and at intermediate intervals of not more than 3 feet. Anchors for concrete shall be expansion bolts, and anchors for masonry shall be 3/16 x 1-1/4 inch steel straps extending not less than 8 inches into the masonry and turned down 2 inches into the masonry.

3.3 INSTALLATION OF INSULATION

Insulation shall be installed after construction has advanced to a point that the installed insulation will not be damaged by remaining work. For thermal insulation the actual installed thickness shall provide the R-values shown. For acoustical insulation the installed thickness shall be as shown. Insulation shall be installed on the weather side of such items as electrical boxes and water lines. Unless otherwise specified, installation shall be in accordance with the manufacturer's recommendation.

3.4 TABLES

TABLE I. SPECIES AND GRADE

Subflooring, Roof Sheathing, Wall Sheathing, Furring

Grading Rules	Species	Const Standard	No. 2 Comm	No. 2 Board Comm	No. 3 Comm
NHLA Rules					
	Cypress			X	
NELMA Grading Rules					
	Northern White Cedar				X
	Eastern White Pine	X			
	Northern Pine	X			
	Balsam Fir				X
	Eastern Hemlock-Tamarack				X
RIS Grade Use					
	Redwood		X		
SCMA Spec					
	Cypress			X	
SPIB 1003					
	Southern Pine		X		
WCLIB 17					
	Douglas Fir-Larch	X			
	Hem-Fir	X			
	Sitka Spruce	X			
	Mountain Hemlock	X			
	Western Cedar	X			
WWPA Grading Rules					
	Douglas Fir-Larch	X			
	Hem-Fir	X			
	Idaho White Pine	X			
	Lodgepole Pine			X	
	Ponderosa Pine			X	
	Sugar Pine			X	
	Englemann Spruce			X	
	Douglas Fir South			X	
	Mountain Hemlock			X	
	Subalpine Fir			X	
	Western Cedar			X	

TABLE II. SPECIES AND GRADE

Wood Bumpers

Grading Rules	Species	No. 1	No. 2
NHLA Rules			

TABLE II. SPECIES AND GRADE

Wood Bumpers

Grading Rules	Species	No. 1	No. 2
	Red Oak	X	
NELMA Grading Rules			
	Northern Pine		X
	Eastern Hemlock-Tamarack		X
SPIB 1003			
	Southern Pine	X	
WCLIB 17			
	Douglas Fir-Larch		X
	Hem-Fir		X
WWPA Grading Rules			
	Douglas Fir-Larch		X
	Hem-Fir		X
	Douglas Fir-South		X

-- End of Section --

SECTION TABLE OF CONTENTS

DIVISION 06 - WOOD AND PLASTICS

SECTION 06200A

FINISH CARPENTRY

11/01

PART 1 GENERAL

1.1 REFERENCES
1.2 SUBMITTALS
1.3 DELIVERY AND STORAGE

PART 2 PRODUCTS

2.1 WOOD ITEMS, AND TRIM
2.1.1 Certified Wood
2.1.2 Grading and Marking
2.1.3 Sizes and Patterns
2.1.4 Moisture Content
2.1.5 Preservative Treatment
2.1.5.1 Plywood
2.1.6 Moldings
2.1.7 Woodwork Items
2.1.7.1 Bulletin Boards
2.1.7.2 Utility Shelving
2.2 NAILS

PART 3 EXECUTION

3.1 GENERAL
3.2 MOLDING AND INTERIOR TRIM
3.3 WOODWORK ITEMS
3.3.1 Bulletin Boards and Chalkboards
3.3.2 Shelving
3.3.3 Clothes Hanger Rods
3.4 TABLES

-- End of Section Table of Contents --

UFGS-06200A (November 2001)

SECTION 06200A

FINISH CARPENTRY
11/01

PART 1 GENERAL

1.1 REFERENCES

The publications listed below form a part of this specification to the extent referenced. The publications are referred to in the text by basic designation only.

AMERICAN SOCIETY FOR TESTING AND MATERIALS (ASTM)

ASTM F 547	(1977; R 1995) Definitions of Terms Relating to Nails for Use with Wood and Wood-Based Materials

AMERICAN WOOD-PRESERVERS' ASSOCIATION (AWPA)

AWPA C9	(1997) Plywood - Preservative Treatment by Pressure Processes
AWPA P5	(2000) Standards for Waterborne Preservatives

NORTHEASTERN LUMBER MANUFACTURERS ASSOCIATION (NELMA)

NELMA Grading Rules	(1997) Standard Grading Rules for Northeastern Lumber

REDWOOD INSPECTION SERVICE (RIS)

RIS Grade Use	(1987) Grades of California Redwood Lumber

SOUTHERN CYPRESS MANUFACTURERS ASSOCIATION (SCMA)

SCMA Spec	(1986; Supple No. 1, Aug 1993) Standard Specifications for Grades of Southern Cypress

SOUTHERN PINE INSPECTION BUREAU (SPIB)

SPIB 1003	(1994; Supple 8 thru 11) Standard Grading Rules for Southern Pine Lumber

WEST COAST LUMBER INSPECTION BUREAU (WCLIB)

WCLIB 17	(1996; Supples VII(A-E), VIII(A-C)) Grading Rules for West Coast Lumber

WESTERN WOOD PRODUCTS ASSOCIATION (WWPA)

WWPA Grading Rules	(1999) Western Lumber Grading Rules 95

1.2 SUBMITTALS

Government approval is required for submittals with a "G" designation; submittals not having a "G" designation are for information only. When used, a designation following the "G" designation identifies the office that will review the submittal for the Government. The following shall be submitted in accordance with Section 01330 SUBMITTAL PROCEDURES:

SD-03 Product Data

Wood Items, and Trim

Manufacturer's printed data indicating the usage of engineered or recycled wood products, and environmentally safe preservatives.

*2

SD-07 Certificates

Certified Wood;G, RO

Certificate attesting to percentage (50 minimum) of use of certified wood in wood and wood products under this section.

1.3 DELIVERY AND STORAGE

Materials shall be delivered to the site in undamaged condition, stored off ground in fully covered, well-ventilated areas, and protected from extreme changes in temperature and humidity.

PART 2 PRODUCTS

2.1 WOOD ITEMS, AND TRIM

The Contractor shall furnish products which optimize design by reducing the amount of wood used (engineered wood), by using recycled wood products and preservatives without arsenic or chromium when the products and methods are competitive in price or directed by the Contracting Officer. The Contractor shall comply with EPA requirements in accordance with Section 01670 RECYCLED / RECOVERED MATERIALS, and Section 01335 SUSTAINABLE DESIGN AND DEVELOPMENT.

*2

2.1.1 Certified Wood

The term "certified wood" denotes forest products incorporated into lumber and panel products that is either regionally harvested or produced in managed forests, as specified in Section 01335 SUSTAINABLE DESIGN AND DEVELOPMENT and Section 01670 RECYCLED / RECOVERED MATERIALS.

2.1.2 Grading and Marking

Materials shall bear the grademark, stamp or other identifying marks indicating grades of material and rules or standards under which produced. Such identifying marks on a material shall be in accordance with the rule or standard under which the material is produced, including requirements for qualifications and authority of the inspection organization, usage of authorized identification, and information included in the identification. The inspection agency for lumber shall be certified by the Board of Review, American Lumber Standards Committee, to grade the species used. Except for

plywood, wood structural panels, and lumber, bundle marking will be permitted in lieu of marking each individual piece. Surfaces that are to be architecturally exposed to view shall not bear grademarks, stamps, or other types of identifying marks.

2.1.3 Sizes and Patterns

Lumber sizes and patterns shall conform to rules or standards under which produced. Unless otherwise specified, lumber shall be surfaced on four sides. Sizes and patterns for materials other than lumber shall conform to requirements of the rules or standards under which produced. Size references, unless otherwise specified, are nominal sizes, and actual sizes shall be within manufacturing tolerances allowed by the standard under which the product is produced.

2.1.4 Moisture Content

The maximum moisture content of untreated trim and wood siding shall be 15 percent at the time of delivery to the jobsite and when installed. Moisture content of all other material shall be in accordance with the standard under which the product is produced.

2.1.5 Preservative Treatment

2.1.5.1 Plywood

Plywood shall be treated in accordance with AWPA C9 with waterborne preservatives listed in AWPA P5 to a retention level as follows:

a. 0.25 pcf intended for above ground use.

b. 0.4 pcf intended for ground contact and fresh water use.

2.1.6 Moldings

Moldings shall be of the pattern indicated and shall be of a grade compatible with the finish specified.

2.1.7 Woodwork Items

2.1.7.1 Bulletin Boards

Bulletin boards shall have a hardwood or aluminum frame, 1/4 inch thick plywood or hardboard back; and a 1/4 inch thick, dense, smooth faced corkboard face securely cemented to the back.

2.1.7.2 Utility Shelving

Utility shelving shall be a suitable species equal to or exceeding requirements of No. 3 Common white fir under WWPA Grading Rules, 1 inch thick; or plywood, interior type, Grade A-B, 1/2 inch thick, any species group.

2.2 NAILS

Nails shall be the size and type best suited for the purpose and shall conform to ASTM F 547. Nails shall be hot-dip galvanized or aluminum when used on exterior work. For siding, length of nails shall be sufficient to extend 1-1/2 inches into supports, including wood sheathing over framing.

Screws for use where nailing is impractical shall be size best suited for purpose.

PART 3 EXECUTION

3.1 GENERAL

3.2 MOLDING AND INTERIOR TRIM

Molding and interior trim shall be installed straight, plumb, level and with closely fitted joints. Exposed surfaces shall be machine sanded at the mill. Molded work shall be coped at returns and interior angles and mitered at external corners. Intersections of flatwork shall be shouldered to ease any inherent changes in plane. Window and door trim shall be provided in single lengths. Blind nailing shall be used to the extent practicable, and face nailing shall be set and stopped with a nonstaining putty to match the finish applied. Screws shall be used for attachment to metal; setting and stopping of screws shall be of the same quality as required where nails are used.

3.3 WOODWORK ITEMS

3.3.1 Bulletin Boards and Chalkboards

Items shall be installed in accordance with the manufacturer's recommendation.

3.3.2 Shelving

Shelving shall be anchored to supporting construction. Unless otherwise indicated, shelves shall be supported by wall-supported brackets not more than 24 inches on center or as required to limit deflection to 1/4 inch between supports with a load of 35 lb per lineal foot. Adjustable shelf hardware shall be steel standards, channel shaped, with 1 inch adjustment slots and brackets designed for attachment to standards.

3.3.3 Clothes Hanger Rods

Rods shall be provided where indicated and in all closets having hook strips. Rods shall be aluminum pipe or tubing 1 inch in diameter. Rods shall be set parallel with the front edges of the shelving, and shall be supported at each end by suitable sockets, and by intermediate brackets spaced at not more than 4 foot centers.

3.4 TABLES

TABLE I. SPECIES AND GRADE TABLES

Grading Rules	Species	Choice	Clear	C Select	C & Better
NELMA Grading Rules					
	Eastern Cedar				X
	Eastern Hemlock		X		
	Tamarack				X
	Eastern W. Pine				X

TABLE I. SPECIES AND GRADE TABLES

Grading Rules	Species	Choice	Clear	C Select	C & Better
	Northern Pine				X
	Eastern Spruce			X	
	Balsam Fir		X		
RIS Grade Use	Redwood			X	
SCMA Spec	Cypress			X	
SPIB 1003	Southern Pine				X
WCLIB 17	Douglas Fir			X	
	Larch				X
	Hemlock Fir				X
	Mountain Hemlock				X
	Sitka Spruce				X
WWPA Grading Rules					
	Douglas Fir				X
	Larch				X
	Hemlock Fir		X		
	Mountain Hemlock				X
	Western Larch		X		
	Idaho White Pine	X			
	Lodgepole Pine		X		
	Ponderosa Pine		X		
	Sugar Pine		X		
	Englemann Spruce		X		
	Douglas Fir South		X		
	Subalpine Fir		X		

NOTE 1: Western Cedar under WCLIB 17 shall be Grade B; and under WWPA Grading Rules, Western Cedar shall be Grade B bevel for siding and Grade A for trim.

NOTE 2: Except as specified in NOTE 3 below, siding and exterior trim shall be any of the species listed above. Interior trim shall be any one of the species listed above and the highest grade of the species for stain or natural finish and one grade below highest grade of species for paint finish.

NOTE 3: Southern Yellow Pine, Douglas Fir, Larch, Western Larch, and Tamarack shall not be used where painting is required and may be used on exterior work only when approved and stained with a preservative type stain.

-- End of Section --

SECTION TABLE OF CONTENTS

DIVISION 06 - WOOD AND PLASTICS

SECTION 06410A

LAMINATE CLAD ARCHITECTURAL CASEWORK

11/01

PART 1 GENERAL

1.1 REFERENCES
1.2 GENERAL DESCRIPTION
1.3 SUBMITTALS
1.4 QUALITY ASSURANCE
1.5 DELIVERY AND STORAGE
1.6 SEQUENCING AND SCHEDULING
1.7 PROJECT/SITE CONDITIONS

PART 2 PRODUCTS

2.1 WOOD MATERIALS
2.1.1 Certified Wood
2.1.2 Lumber
2.1.2.1 Standing and Running Trim
2.1.3 Panel Products
2.1.3.1 Plywood
2.1.3.2 Medium Density Fiberboard
2.2 HIGH PRESSURE DECORATIVE LAMINATE (HPDL)
2.2.1 Horizontal General Purpose Standard (HGS) Grade
2.2.2 Vertical General Purpose Standard (VGS) Grade
2.2.3 Cabinet Liner Standard (CLS) Grade
2.2.4 Backing Sheet (BK) Grade
2.3 THERMOSET DECORATIVE OVERLAYS (MELAMINE)
2.4 EDGE BANDING
2.5 CABINET HARDWARE
2.6 FASTENERS
2.7 ADHESIVES, CAULKS, AND SEALANTS
2.7.1 Adhesives
2.7.2 Caulk
2.7.3 Sealant
2.8 WOOD FINISHES
2.9 ACCCESSORIES
2.9.1 Glass and Glazing
2.9.2 Grommets
2.10 FABRICATION
2.10.1 Base and Wall Cabinet Case Body
2.10.1.1 Joinery Method for Case Body Members
2.10.2 Cabinet Floor Base
2.10.3 Cabinet Door and Drawer Fronts
2.10.4 Drawer Assembly
2.10.4.1 Drawer Assembly Joinery Method
2.10.5 Shelving
2.10.5.1 Shelf Support System
2.10.6 Laminate Clad Countertops
2.10.6.1 Edge Style
2.10.6.2 Laminate Clad Splashes

2.10.7 Laminate Application
2.10.7.1 Tolerances
2.10.8 Finishing
2.10.8.1 Filling
2.10.8.2 Sanding
2.10.8.3 Coatings

PART 3 EXECUTION

3.1 INSTALLATION
3.1.1 Anchoring Systems
3.1.1.1 Floor
3.1.1.2 Wall
3.1.2 Countertops
3.1.2.1 Loose Splashes
3.1.3 Hardware
3.1.4 Doors, Drawers and Removable Panels
3.1.5 Plumbing Fixtures
3.1.6 Glass

-- End of Section Table of Contents --

UFGS-06410A (November 2001)

SECTION 06410A

LAMINATE CLAD ARCHITECTURAL CASEWORK
11/01

PART 1 GENERAL

1.1 REFERENCES

The publications listed below form a part of this specification to the extent referenced. The publications are referred to in the text by basic designation only.

AMERICAN NATIONAL STANDARDS INSTITUTE (ANSI)

ANSI A161.2	(1998) Decorative Laminate Countertops, Performance Standards for Fabricated High Pressure
ANSI A208.2	(1994) Medium Density Fiberboard (MDF)

AMERICAN SOCIETY FOR TESTING AND MATERIALS (ASTM)

ASTM F 547	(1977; R 1995) Definitions of Terms Relating to Nails for Use with Wood and Wood-Based Materials

ARCHITECTURAL WOODWORK INSTITUTE (AWI)

AWI Qual Stds	(1999) Architectural Woodwork Quality Standards

BUILDERS HARDWARE MANUFACTURERS ASSOCIATION (BHMA)

BHMA A156.9	(1994) Cabinet Hardware

NATIONAL ELECTRICAL MANUFACTURERS ASSOCIATION (NEMA)

NEMA LD 3	(1995) High-Pressure Decorative Laminates
NEMA LD 3.1	(1995) Performance, Application, Fabrication, and Installation of High-Pressure Decorative Laminates

1.2 GENERAL DESCRIPTION

*2

Work in this section includes laminate clad custom casework cabinets, counters, display cases, and wood clothing lockers, as shown on the drawings and as described in this specification. This Section includes high-pressure laminate surfacing and cabinet hardware. The Contractor shall comply with EPA requirements in accordance with Section 01670 RECYCLED / RECOVERED MATERIALS. All exposed and semi-exposed surfaces, whose finish is not otherwise noted on the drawings or finish schedule, shall be sanded smooth and shall receive a clear finish of polyurethane.

Wood finish may be shop finished or field applied in accordance with Section 09900 PAINTING, GENERAL.

1.3 SUBMITTALS

Government approval is required for submittals with a "G" designation; submittals not having a "G" designation are for information only. When used, a designation following the "G" designation identifies the office that will review the submittal for the Government. All items designated with a "G", including product literature, calculations, component data, certificates, diagrams, drawings, and samples shall be submitted concurrently in one complete system submittal. Omission of any required submittal item from the package shall be sufficient cause for disapproval of the entire submittal. Unless otherwise indicated in the submittal review commentary, disapproval of any item within the package shall require a re-submittal of the entire system package, in which all deficiencies shall be corrected. The following shall be submitted in accordance with Section 01330 SUBMITTAL PROCEDURES.

SD-02 Shop Drawings

Shop Drawings
Installation

Shop drawings showing all fabricated casework items in plan view, elevations and cross-sections to accurately indicate materials used, details of construction, dimensions, methods of fastening and erection, and installation methods proposed. Shop drawing casework items shall be clearly cross-referenced to casework items located on the project drawings. Shop drawings shall include a color schedule of all casework items to include all countertop, exposed, and semi-exposed cabinet finishes to include finish material manufacturer, pattern, and color.

SD-03 Product Data

Wood Materials
Wood Finishes

Descriptive data which provides narrative written verification of all types of construction materials and finishes, methods of construction, etc. not clearly illustrated on the submitted shop drawings. Data shall provide written verification of conformance with AWI Qual Stds for the quality indicated to include materials, tolerances, and types of construction. Both the manufacturer of materials and the fabricator shall submit available literature which describes re-cycled product content, operations and processes in place that support efficient use of natural resources, energy efficiency, emissions of ozone depleting chemicals, management of water and operational waste, indoor environmental quality, and other production techniques supporting sustainable design and products.

SD-04 Samples

Plastic Laminates

Two samples of each plastic laminate pattern and color. Samples shall be a minimum of 5 by 7 inches in size.

Cabinet Hardware

One sample of each cabinet hardware item specified to include hinges, pulls, drawer glides, and glass door rollers/track.

SD-07 Certificates

Quality Assurance
Laminate Clad Casework

A quality control statement which illustrates compliance with and understanding of AWI Qual Stds requirements, in general, and the specific AWI Qual Stds requirements provided in this specification. The quality control statement shall also certify a minimum of ten years contractor's experience in laminate clad casework fabrication and construction. The quality control statement shall provide a list of a minimum of five successfully completed projects of a similar scope, size, and complexity.

*2

SD-07 Certificates

Certified Wood;G, RO

Certificate attesting to percentage of use (50 minimum) of certified wood in wood and wood products under this section.

1.4 QUALITY ASSURANCE

Unless otherwise noted on the drawings, all materials, construction methods, and fabrication shall conform to and comply with the custom grade quality standards as outlined in AWI Qual Stds, Section 400G and Section 400B for laminate clad cabinets. These standards shall apply in lieu of omissions or specific requirements in this specification. Contractors and their personnel engaged in the work shall be able to demonstrate successful experience with work of comparable extent, complexity and quality to that shown and specified. Contractor must demonstrate knowledge and understanding of AWI Qual Stds requirements for the quality grade indicated.

1.5 DELIVERY AND STORAGE

Casework may be delivered knockdown or fully assembled. All units shall be delivered to the site in undamaged condition, stored off the ground in fully enclosed areas, and protected from damage. The storage area shall be well ventilated and not subject to extreme changes in temperature or humidity.

1.6 SEQUENCING AND SCHEDULING

Work shall be coordinated with other trades. Units shall not be installed in any room or space until painting, and ceiling installation are complete within the room where the units are located. Floor cabinets shall be installed before finished flooring materials are installed.

1.7 PROJECT/SITE CONDITIONS

Field measurements shall be verified as indicated in the shop drawings before fabrication.

PART 2 PRODUCTS

2.1 WOOD MATERIALS
*2
2.1.1 Certified Wood

The term "certified wood" denotes forest products incorporated into lumber and panel products that is either regionally harvested or produced in managed forests, as specified in Section 01335 SUSTAINABLE DESIGN AND DEVELOPMENT and Section 01670 RECYCLED / RECOVERED MATERIALS.

2.1.2 Lumber

All framing lumber shall be kiln-dried Grade III to dimensions as shown on the drawings. Frame front, where indicated on the drawings, shall be nominal 3/4 inch hardwood.

2.1.2.1 Standing and Running Trim

Standing or running trim casework components which are specified to receive a transparent finish shall be red oak hardwood species, plain sawn. AWI grade shall be custom. Location, shape, and dimensions shall be as indicated on the drawings.

2.1.3 Panel Products

2.1.3.1 Plywood

All plywood panels used for framing purposes shall be veneer core hardwood plywood, AWI Qual Stds Grade AA. Nominal thickness of plywood panels shall be as indicated in this specification and on the drawings.

2.1.3.2 Medium Density Fiberboard

Medium density fiberboard (MDF) shall be an acceptable panel substrate where noted on the drawings. Medium density fiberboard shall meet the minimum standards listed in ANSI A208.2.

2.2 HIGH PRESSURE DECORATIVE LAMINATE (HPDL)

All plastic laminates shall meet the requirements of NEMA LD 3 and ANSI A161.2 for high-pressure decorative laminates. Design, colors, surface finish and texture, and locations shall be as indicated on the drawings. Plastic laminate types and nominal minimum thicknesses for casework components shall be as indicated in the following paragraphs.

2.2.1 Horizontal General Purpose Standard (HGS) Grade

Horizontal general purpose standard grade plastic laminate shall be 0.048 inches (plus or minus 0.005 inches) in thickness. This laminate grade is intended for horizontal surfaces where postforming is not required.

2.2.2 Vertical General Purpose Standard (VGS) Grade

Vertical general purpose standard grade plastic laminate shall be 0.028 inches (plus or minus 0.004 inches) in thickness. This laminate grade is intended for exposed exterior vertical surfaces of casework components where postforming is not required.

2.2.3 Cabinet Liner Standard (CLS) Grade

Cabinet liner standard grade plastic laminate shall be 0.020 inches in thickness. This laminate grade is intended for light duty semi-exposed interior surfaces of casework components.

2.2.4 Backing Sheet (BK) Grade

Undecorated backing sheet grade laminate is formulated specifically to be used on the backside of plastic laminated panel substrates to enhance dimensional stability of the substrate. Backing sheet thickness shall be 0.020 inches. Backing sheets shall be provided for all laminated casework components where plastic laminate finish is applied to only one surface of the component substrate.

2.3 THERMOSET DECORATIVE OVERLAYS (MELAMINE)

Thermoset decorative overlays (melamine panels) shall be used for all semi-exposed surfaces.

2.4 EDGE BANDING

Edge banding for casework doors and drawer fronts shall be PVC vinyl and shall be 0.125 inch thick. Material width shall be as indicated on the drawings. Color and pattern shall match exposed door and drawer front laminate pattern and color.

2.5 CABINET HARDWARE

All hardware shall conform to BHMA A156.9, unless otherwise noted, and shall consist of the following components:

a. Door Hinges: concealed type.

b. Cabinet Pulls: knob type, design as selected, BHMA No. B12132.

c. Drawer Slide: Side mounted full suspension type, BHMA No. B85061 with full extension and a minimum 100 pound load capacity. Slides shall include an integral stop to avoid accidental drawer removal.

d. Adjustable Shelf Support System:

1) Recessed (mortised) metal standards, BHMA No. BO4071, finish: 652. Support clips for the standards shall be closed type, BHMA No. B04081, finish: 652 or

2) Multiple holes with metal pin supports.

2.6 FASTENERS

Nails, screws, and other suitable fasteners shall be the size and type best suited for the purpose and shall conform to ASTM F 547 where applicable.

2.7 ADHESIVES, CAULKS, AND SEALANTS

2.7.1 Adhesives

Adhesives shall be of a formula and type recommended by AWI. Adhesives shall be selected for their ability to provide a durable, permanent bond

and shall take into consideration such factors as materials to be bonded, expansion and contraction, bond strength, fire rating, and moisture resistance. Adhesives shall meet local regulations regarding VOC emissions and off-gassing. As far as practical, adhesives with the lowest emission levels shall be chosen.

2.7.2 Caulk

Caulk used to fill voids and joints between laminated components and between laminated components and adjacent surfaces shall be clear, 100 percent silicone.

2.7.3 Sealant

Sealant shall be of a type and composition recommended by the substrate manufacturer to provide a moisture barrier at sink cutouts and all other locations where unfinished substrate edges may be subjected to moisture.

2.8 WOOD FINISHES

Paint, stain, varnish and their applications required for laminate clad casework components shall be as indicated in the drawings. Color and location shall be as indicated on the drawings.

2.9 ACCCESSORIES

2.9.1 Glass and Glazing

Glass required in laminated casework shall be referenced by type in accordance with Section 08810A GLASS AND GLAZING. Glass shall be the following:

a. Safety glass: Clear; fully tempered; 1/4 inch thick minimum.

2.9.2 Grommets

Grommets shall be plastic material for cutouts with a diameter of 2 inches. Locations shall be as indicated on the drawings.

2.10 FABRICATION

Fabrication and assembly of components shall be accomplished at the shop site to the maximum extent possible. Construction and fabrication of cabinets and their components shall meet or exceed the requirements for AWI custom grade unless otherwise indicated in this specification. Cabinet style, in accordance with AWI Qual Stds, Section 400-G descriptions, shall be as indicated on the drawings.

2.10.1 Base and Wall Cabinet Case Body

Frame members shall be glued-together, kiln-dried hardwood lumber. Top corners, bottom corners, and cabinet bottoms shall be braced with either hardwood blocks or water-resistant glue and nailed in place metal or plastic corner braces. Cabinet components shall be constructed from the materials and of thicknesses conforming to the rferenced standards.

2.10.1.1 Joinery Method for Case Body Members

a. Tops, Exposed Ends, and Bottoms.

1) Steel "European" assembly screws (1-1/2 inch from end, 5 inch on center, fasteners will not be visible on exposed parts).

2) Doweled, glued under pressure (approx. 4 dowels per 12 inches of joint).

3) Stop dado, glued under pressure, and either nailed, stapled or screwed (fasteners will not be visible on exposed parts).

4) Spline or biscuit, glued under pressure.

b. Exposed End Corner and Face Frame Attachment.

1) For mitered joint: lock miter or spline or biscuit, glued under pressure (no visible fasteners).

2) For non-mitered joint (90 degree): butt joint glued under pressure (no visible fasteners).

3) Butt joint, glued and nailed.

c. Cabinet Backs (Wall Hung Cabinets): Wall hung cabinet backs must not be relied upon to support the full weight of the cabinet and its anticipated load for hanging/mounting purposes. Method of back joinery and hanging/mounting mechanisms should transfer the load to case body members. Fabrication method shall be:

1) Full bound, captured in grooves on cabinet sides, top, and bottom. Cabinet backs for floor standing cabinets shall be side bound, captured in grooves; glued and fastened to top and bottom.

2) Full overlay, plant-on backs with minimum back thickness of 1/2 inchand minimum No. 12 plated (no case hardened) screws spaced a minimum 3 inches on center. Edge of back shall not be exposed on finished sides. Anchor strips are not required when so attached.

3) Side bound, captured in groove or rabbetts; glued and fastened.

d. Cabinet Backs (Floor Standing Cabinets).

1) Side bound, captured in grooves; glued and fastened to top and bottom.

2) Full overlay, plant-on backs with minimum back thickness of 1/2 inch and minimum No. 12 plated (no case hardened) screws spaced a minimum 3 inches on center. Edge of back shall not be exposed on finished sides. Anchor strips are not required when so attached.

3) Side bound, placed in rabbetts; glued and fastened in rabbetts.

e. Wall Anchor Strips shall be required for all cabinets with backs less than 1/2 inch thick. Strips shall consist of minimum 1/2 inch thick lumber, minimum 2-1/2 inches width; securely attached to wall side of cabinet back - top and bottom for wall hung cabinets, top only

for floor standing cabinets.

2.10.2 Cabinet Floor Base

Floor cabinets shall be mounted on a base constructed of 3/4 inch veneer core exterior plywood. Base assembly components shall be a moisture-resistant panel product. Finished height for each cabinet base shall be as indicated on the drawings. Bottom edge of the cabinet door or drawer face shall extend below the top of the base as indicated on the drawings.

2.10.3 Cabinet Door and Drawer Fronts

Door and drawer fronts shall be fabricated from 3/4 inch medium density fiberboard (MDF. All door and drawer front edges shall be surfaced with high pressure plastic laminate PVC edgebanding, color and pattern to match exterior face laminate.

2.10.4 Drawer Assembly

Drawer components shall consist of a removable drawer front, sides, backs, and bottom. Drawer components shall be constructed of the following materials and thicknesses:

a. Drawer Sides and Backs For Transparent Finish: 1/2 inch thick 7-ply hardwood veneer core plywood (no voids), any species.

b. Drawer Sides and Backs For Laminate Finish: 1/2 inch thick 7-ply hardwood veneer core substrate.

c. Drawer Sides and Back For Thermoset Decorative Overlay (melamine) Finish: 1/2 inch thick medium density particleboard or MDF fiberboard substrate.

d. Drawer Bottom: 1/4 inch thick thermoset decorative overlay melamine panel product.

2.10.4.1 Drawer Assembly Joinery Method

a. Multiple dovetail (all corners) or French dovetail front/dadoed back, glued under pressure.

b. Doweled, glued under pressure.

c. Lock shoulder, glued and pin nailed.

d. Bottoms shall be set into sides, front, and back, 1/4 inch deep groove with a minimum 3/8 inch standing shoulder.

2.10.5 Shelving

Shelving shall be fabricated from 3/4 inch veneer core plywood. All shelving top and bottom surfaces shall be finished with thermoset decorative overlay (melamine). Shelf edges shall be finished in a thermoset decorative overlay (melamine).

2.10.5.1 Shelf Support System

The shelf support system shall be:

a. Recessed (mortised) metal shelf standards. Standards shall be mortised flush with the finishes surface of the cabinet interior side walls, two per side. Standards shall be positioned and spaced on the side walls to provide a stable shelf surface that eliminates tipping when shelf front is weighted. Standards shall be installed and adjusted vertically to provide a level, stable shelf surface when clips are in place.

2.10.6 Laminate Clad Countertops

Laminate countertop substrate shall be constructed of 3/4 inch medium density fiberboard (MDF). The substrate shall be moisture-resistant where countertops receive sinks, lavatories, or are subjected to liquids. All substrates shall have sink cutout edges sealed with appropriate sealant against moisture. No joints shall occur at any cutouts. A balanced backer sheet is required.

2.10.6.1 Edge Style

Front and exposed side countertop edges shall be in shapes and to dimensions as shown on the drawings. The countertop edge material shall be:

a. Plastic laminate Self Edge. Flat, 90 degree "self " edge. Edge must be applied before top. Laminate edge shall overlap countertop laminate and shall be eased to eliminate sharp corners.

2.10.6.2 Laminate Clad Splashes

Countertop splash substrate shall be 3/4 inch MDF fiberboard. Laminate clad backsplash shall be loose, to be installed at the time of countertop installation. Side splashes shall be straight profile and provided loose, to be installed at the time of countertop installation. Back and side splash laminate pattern and color shall match the adjacent countertop laminate.

2.10.7 Laminate Application

Laminate application to substrates shall follow the recommended procedures and instructions of the laminate manufacturer and NEMA LD 3.1, using tools and devices specifically designed for laminate fabrication and application. Provide a balanced backer sheet (Grade BK) wherever only one surface of the component substrate requires a plastic laminate finish. Apply required grade of laminate in full uninterrupted sheets consistent with manufactured sizes using one piece for full length only, using adhesives specified herein or as recommended by the manufacturer. Fit corners and joints hairline. All laminate edges shall be machined flush, filed, sanded, or buffed to remove machine marks and eased (sharp corners removed). Clean up at easing shall be such that no overlap of the member eased is visible. Fabrication shall conform to NEMA LD 3.1 and ANSI A161.2. Laminate types and grades for component surfaces shall be as follows unless otherwise indicated on the drawings:

a. Base/Wall Cabinet Case Body.

1) Exterior (exposed) surfaces to include exposed and semi-exposed face frame surfaces: HPDL Grade VGS.

2) Interior (semi-exposed) surfaces to include interior back wall,

bottom, and side walls: Thermoset Decorative Overlay (melamine).

b. Adjustable Shelving.

1) Top and bottom surfaces: Thermoset Decorative Overlay (melamine).

2) All edges: PVC edgebanding.

c. Fixed Shelving.

1) Top and bottom surfaces: Thermoset Decorative Overlay (melamine).

2) Exposed edges: PVC edgebanding.

d. Door, Drawer Fronts, Access Panels.

1) Exterior (exposed) and interior (semi-exposed) faces: HPDL Grade VGS

2) Edges: HPDL Grade VGS.

e. Drawer Assembly.

All interior and exterior surfaces: Thermoset Decorative Overlay (melamine).

f. Countertops and Splashes.

1) All exposed and semi-exposed surfaces: HPDL Grade HGS

2.10.7.1 Tolerances

Flushness, flatness, and joint tolerances of laminated surfaces shall meet the AWI Qual Stds custom grade requirements.

2.10.8 Finishing

2.10.8.1 Filling

No fasteners shall be exposed on laminated surfaces. All nails, screws, and other fasteners in non-laminated cabinet components shall be countersunk and the holes filled with wood filler consistent in color with the wood species.

2.10.8.2 Sanding

All surfaces requiring coatings shall be prepared by sanding with a grit and in a manner that scratches will not show in the final system.

2.10.8.3 Coatings

Types, method of application and location of casework finishes shall be in accordance with the finish schedule, drawings and Section 09900 PAINTING, GENERAL. All cabinet reveals shall be painted.

PART 3 EXECUTION

3.1 INSTALLATION

Installation shall comply with applicable requirements for AWI Qual Stds custom quality standards. Countertops and fabricated assemblies shall be installed level, plumb, and true to line, in locations shown on the drawings. Cabinets and other laminate clad casework assemblies shall be attached and anchored securely to the floor and walls with mechanical fasteners that are appropriate for the wall and floor construction.

3.1.1 Anchoring Systems

3.1.1.1 Floor

Base cabinets shall utilize a floor anchoring system as detailed on the drawings. Anchoring and mechanical fasteners shall not be visible from the finished side of the casework assembly. Cabinet assemblies shall be attached to anchored bases without visible fasteners as indicated in the drawings. Where assembly abutts a wall surface, anchoring shall include a minimum 1/2 inch thick lumber or panel product hanging strip, minimum 2-1/2 inch width; securely attached to the top of the wall side of the cabinet back.

3.1.1.2 Wall

Cabinet to be wall mounted shall utilize minimum 1/2 inch thick lumber or panel product hanging strips, minimum 2-1/2 inch width; securely attached to the wall side of the cabinet back, both top and bottom.

3.1.2 Countertops

Countertops shall be installed in locations as indicated on the drawings. Countertops shall be fastened to supporting casework structure with mechanical fasteners, hidden from view. All joints formed by the countertop or countertop splash and adjacent wall surfaces shall be filled with a clear silicone caulk.

3.1.2.1 Loose Splashes

Loose back or side splashes shall be adhered to both the countertop surface perimeter and the adjacent wall surface with adhesives appropriate for the type of materials to be adhered. Joints between the countertop surface and splash shall be filled with clear silicone caulk in a smooth consistent concave bead. Bead size shall be the minimum necessary to fill the joint and any surrounding voids or cracks.

3.1.3 Hardware

Casework hardware shall be installed in types and locations as indicated on the drawings. Where fully concealed European-style hinges are specified to be used with particleboard or fiberboard doors, the use of plastic or synthetic insertion dowels shall be used to receive 3/16 inch "Euroscrews". The use of wood screws without insertion dowels is prohibited.

3.1.4 Doors, Drawers and Removable Panels

The fitting of doors, drawers and removable panels shall be accomplished within target fitting tolerances for gaps and flushness in accordance with

AWI Qual Stds custom grade requirements.

3.1.5 Plumbing Fixtures

Sinks, sink hardware, and other plumbing fixtures shall be installed in locations as indicated on the drawings and in accordance with Section 15400A PLUMBING, GENERAL PURPOSE.

3.1.6 Glass

Glass and glazing shall be installed in the casework using methods and materials specified in Section 08810A GLASS AND GLAZING in locations as indicated on the drawings.

-- End of Section --

SECTION TABLE OF CONTENTS

DIVISION 07 - THERMAL AND MOISTURE PROTECTION

SECTION 07141N

FLUID-APPLIED WATERPROOFING

02/03

PART 1 GENERAL

1.1 REFERENCES
1.2 SUBMITTALS
1.3 PREWATERPROOFING CONFERENCE
1.4 DELIVERY, STORAGE, AND HANDLING
1.5 ENVIRONMENTAL CONDITIONS

PART 2 PRODUCTS

2.1 FLUID-APPLIED MEMBRANE
2.2 MEMBRANE PRIMER
2.3 SEALANT
2.4 SEALANT PRIMER
2.5 BACKING MATERIAL
2.6 JOINT FILLER
2.7 BOND BREAKER
2.8 PROTECTION BOARD

PART 3 EXECUTION

3.1 PREPARATION
3.1.1 Flashings
3.1.1.1 Penetrations and Projections
3.1.1.2 Walls and Vertical Surfaces
3.1.2 Cracks and Joints
3.1.3 Priming
3.2 SPECIAL PRECAUTIONS
3.3 APPLICATION
3.3.1 Work Sequence
3.3.2 Protection Board
3.4 FIELD QUALITY CONTROL
3.4.1 Moisture Test
3.4.2 Film Thickness
3.5 INFORMATION CARD

-- End of Section Table of Contents --

FCESA UFGS-07141N (February 2003)

SECTION 07141N

FLUID-APPLIED WATERPROOFING
02/03

PART 1 GENERAL

1.1 REFERENCES

The publications listed below form a part of this specification to the extent referenced. The publications are referred to in the text by the basic designation only.

AMERICAN SOCIETY FOR TESTING AND MATERIALS (ASTM)

ASTM C 836	(1995) High Solids Content, Cold Liquid-Applied Elastomeric Waterproofing Membrane for Use With Separate Wearing Course

1.2 SUBMITTALS

Government approval is required for submittals with a "G" designation; submittals not having a "G" designation are for information only or as otherwise designated. When used, a designation following the "G" designation identifies the office that will review the submittal for the Government. The following shall be submitted in accordance with Section 01330 SUBMITTAL PROCEDURES:

SD-03 Product Data

Fluid-applied membrane

Membrane primer

Solvent

Moisture meter

Protection board

Bond breaker

Submit material description and physical properties, application details, and recommendations regarding shelf life, application procedures, and precautions on flammability and toxicity.

1.3 PREWATERPROOFING CONFERENCE

Prior to starting application of waterproofing system, arrange and attend a prewaterproofing conference to ensure a clear understanding of drawings and specifications. Give the Contracting Officer 7 days advance written notice of the time and place of meeting. Ensure that the mechanical and electrical subcontractor, flashing and sheetmetal subcontractor, and other

trades that may perform other types of work on or over the membrane after installation, attend this conference.

1.4 DELIVERY, STORAGE, AND HANDLING

Deliver waterproofing materials in manufacturer's original, unopened containers, with labels intact and legible. Containers of materials covered by a referenced specification number shall bear the specification number, type, and class of the contents. Deliver materials in sufficient quantity to continue work without interruption. Store and protect materials in accordance with manufacturer's instructions, and use within their indicated shelf life. When hazardous materials are involved, adhere to special precautions of the manufacturer, unless precautions conflict with local, state, and federal regulations. Promptly remove from the site materials or incomplete work adversely affected by exposure to moisture or freezing. Store materials on pallets and cover from top to bottom with canvas tarpaulins.

1.5 ENVIRONMENTAL CONDITIONS

Apply materials when ambient temperature is 40 degrees F or above for a period of 24 hours prior to the application and when there is no ice, frost, surface moisture, or visible dampness on the substrate surface. Apply materials when air temperature is expected to remain above 40 degrees F during the cure period recommended by the manufacturer. Moisture test for substrate is specified under paragraph entitled "Moisture Test." Work may be performed within heated enclosures, provided the surface temperature of the substrate is maintained at a minimum of 40 degrees F for 24 hours prior to the application of the waterproofing, and remains above that temperature during the cure period recommended by the manufacturer.

PART 2 PRODUCTS

2.1 FLUID-APPLIED MEMBRANE

ASTM C 836.

2.2 MEMBRANE PRIMER

As recommended by the fluid-applied membrane manufacturer unless specifically prohibited by the manufacturer of the fluid-applied membrane.

2.3 SEALANT

As specified in Section07900A JOINT SEALING.

2.4 SEALANT PRIMER

As specified in Section07900A JOINT SEALING.

2.5 BACKING MATERIAL

Premolded, closed-cell, polyethylene, or polyurethane foam rod having a diameter 25 percent larger than joint width before being compressed into joint. Provide bond breaker of polyethylene film or other suitable material between backing material and sealant.

2.6 JOINT FILLER

As specified in Section 03300A, "Cast-In-Place Structural Concrete," .

2.7 BOND BREAKER

As recommended by the fluid-applied membrane manufacturer. Bond breaker shall not interfere with the curing process or other performance properties of the fluid-applied membrane.

2.8 PROTECTION BOARD

Premolded bitumen composition board, 1/8 inch minimum thickness or other composition board compatible with the fluid-applied membrane.

PART 3 EXECUTION

3.1 PREPARATION

Coordinate work with that of other trades to ensure that components to be incorporated into the waterproofing system are available when needed. Inspect and approve surfaces immediately before application of waterproofing materials. Remove laitance, loose aggregate, sharp projections, grease, oil, dirt, curing compounds, and other contaminants which could adversely affect the complete bonding of the fluid-applied membrane to the concrete surface.

3.1.1 Flashings

Make penetrations through sleeves in concrete slab watertight before application of waterproofing. After flashing is completed, cover elastomeric sheet with fluid-applied waterproofing during waterproofing application.

3.1.1.1 Penetrations and Projections

Flash penetrations and projections through structural slab with an elastomeric sheet adhered to the concrete slab and the penetration. Leave elastomeric sheet unadhered for one inch over joint between penetration and concrete slab. Adhere elastomeric sheet a minimum of 4 inches onto horizontal deck.

3.1.1.2 Walls and Vertical Surfaces

Flash wall intersections which are not of monolithic pour or constructed with reinforced concrete joints with an elastomeric sheet adhered to both vertical wall surfaces and concrete slab. Flash intersections which are monolithically poured or constructed with reinforced concrete joints with either an elastomeric sheet or a vertical grade of fluid-applied waterproofing adhered to vertical wall surfaces and concrete slab. Leave sheet unadhered for a distance of one inch from the corner on both vertical and horizontal surfaces.

3.1.2 Cracks and Joints

Prepare visible cracks and joints in substrate to receive fluid-applied waterproofing membrane by placing a bond breaker and an elastomeric slip sheet between membrane and substrate. Cracks that show movement shall receive a 2 inch bond breaker followed by an elastomeric sheet adhered to

the deck. Nonmoving cracks shall be double coated with fluid-applied waterproofing.

3.1.3 Priming

Prime surfaces to receive fluid-applied waterproofing membrane. Apply primer as required by membrane manufacturer's printed instructions.

3.2 SPECIAL PRECAUTIONS

Protect waterproofing materials during transport and application. Do not dilute primers and other materials, unless specifically recommended by materials manufacturer. Keep containers closed except when removing contents. Do not mix remains of unlike materials. Thoroughly remove residual materials before using application equipment for mixing and transporting materials. Do not permit equipment on the project site that has residue of materials used on previous projects. Use cleaners only for cleaning, not for thinning primers or membrane materials. Ensure that workers and others who walk on cured membrane wear clean, soft-soled shoes to avoid damaging the waterproofing materials.

3.3 APPLICATION

Over primed surfaces, provide a uniform, wet, monolithic coating of fluid-applied membrane, 60 mils thick, plus or minus 5 mils by following manufacturer's printed instructions. Apply material by trowel, squeegee, roller, brush, spray apparatus, or other method recommended by membrane manufacturer. Check wet film thickness as specified in paragraph entitled "Film Thickness" and adjust application rate as necessary to provide a uniform coating of the thickness specified. Where possible, mark off surface to be coated in equal units to facilitate proper coverage. At expansion joints, control joints, prepared cracks, flashing, and terminations, carry membrane over preformed elastomeric sheet in a uniform 60 mil thick, plus or minus 5 mils, wet thickness to provide a monolithic coating. If membrane cures before next application, wipe previously applied membrane with a solvent to remove dirt and dust that could inhibit adhesion of overlapping membrane coat. Use solvent recommended by the membrane manufacturer, as approved.

3.3.1 Work Sequence

Perform work so that protection board is installed prior to using the waterproofed surface. Do not permanently install protection board until the membrane has passed the flood test specified under paragraph entitled "Flood Test." Move material storage areas as work progresses to prevent abuse of membrane and overloading of structural deck.

3.3.2 Protection Board

Protect fluid-applied membrane by placing protection board over membrane at a time recommended by the membrane manufacturer. Protect membrane application when protection board is not placed immediately. Butt protection boards together and do not overlap.

3.4 FIELD QUALITY CONTROL

3.4.1 Moisture Test

Prior to application of fluid-applied waterproofing, measure moisture

content of substrate with a moisture meter in the presence of the Contracting Officer. An acceptable device is the Delmhorst Moisture Meter, Model BD7/2E/CS, Type 21 E. Similar meters by other manufacturers, which are suitable for the purpose, may be used as approved by the Contracting Officer. Do not begin application until meter reading indicates "dry" range.

3.4.2 Film Thickness

Measure wet film thickness every 100 square feetduring application by placing flat metal plates on the substrate or using a mil-thickness gage especially manufactured for the purpose.

3.5 INFORMATION CARD

Furnish a typewritten card containing information listed in the attached Form l, framed in a watertight frame under clear glass or plastic for each waterproofing installation. Furnish framed card and duplicate card.

FORM 1

FLUID-APPLIED WATERPROOFING SYSTEM COMPONENTS

1. Contract Number

2. Date Work Completed

3. Project Specification Designation

4. Substrate Material

5. Slope of Substrate

6. Drains Type/Manufacturer

7. Waterproofing
   a. Membrane
   b. Sealant
   c. Elastomeric Sheet
   d. Materials Manufacturer(s)

8. Protection Board
   a. Type
   b. Thickness
   c. Manufacturer's Name

9. Drainage Course Material Graduation

10. Insulation
    a. Type
    b. Thickness
    c. Manufacturer's Name

11. Protection Slab
    a. Material
    b. Thickness
    c. Support
    d. Joint System

12. Wearing Course
    a. Type
    b. Slope
    c. Joint System
    d. Sealant/Gasket Type

13. Wearing Surface Type
    Manufacturer's Name

14. Statement of Compliance or Exception

Contractor's Signature Date Signed

Inspector's Signature Date Signed

-- End of Section --

SECTION TABLE OF CONTENTS

DIVISION 07 - THERMAL AND MOISTURE PROTECTION

SECTION 07413A

METAL SIDING

10/03

PART 1 GENERAL

1.1 REFERENCES
1.2 GENERAL REQUIREMENTS
1.2.1 Design
1.2.2 Architectural Considerations
1.3 SUBMITTALS
1.4 DELIVERY AND STORAGE
1.5 WARRANTIES

PART 2 PRODUCTS

2.1 SIDING
2.1.1 Wall Panels
2.1.2 Steel Panels
2.1.3 Aluminum Panels
2.2 FACTORY COLOR FINISH
2.2.1 Salt Spray Test
2.2.2 Formability Test
2.2.3 Accelerated Weathering, Chalking Resistance and Color Change
2.2.4 Humidity Test
2.2.5 Impact Resistance
2.2.6 Abrasion Resistance Test
2.3 ACCESSORIES
2.4 FASTENERS
2.4.1 Screws
2.4.2 Blind Rivets
2.4.3 Bolts
2.5 INSULATION
2.6 VAPOR RETARDER
2.6.1 Vapor Retarders as Integral Facing
2.7 SEALANT
2.8 GASKETS AND INSULATING COMPOUNDS

PART 3 EXECUTION

3.1 INSTALLATION
3.1.1 Siding and Accessories
3.1.1.1 Concealed Fastener Wall Panels

-- End of Section Table of Contents --

UFGS-07413A (October 2003)

SECTION 07413A

METAL SIDING
10/03

PART 1 GENERAL

1.1 REFERENCES

The publications listed below form a part of this specification to the extent referenced. The publications are referred to in the text by basic designation only.

ALUMINUM ASSOCIATION (AA)

AA ADM	(2000) Aluminum Design Manual

AMERICAN IRON AND STEEL INSTITUTE (AISI)

AISI SG-973	(1996) Cold-Formed Steel Design Manual

AMERICAN SOCIETY OF CIVIL ENGINEERS (ASCE)

ASCE 7	(2002) Minimum Design Loads for Buildings and Other Structures

ASTM INTERNATIONAL (ASTM)

ASTM A 463/A 463M	(2002a) Steel Sheet, Aluminum-Coated, by the Hot-Dip Process
ASTM A 653/A 653M	(2003) Steel Sheet, Zinc-Coated (Galvanized) or Zinc-Iron Alloy-Coated (Galvannealed) by the Hot-Dip Process
ASTM A 792/A 792M	(2002) Steel Sheet, 55% Aluminum-Zinc Alloy-Coated by the Hot-Dip Process
ASTM B 209	(2002a) Aluminum and Aluminum-Alloy Sheet and Plate
ASTM C 518	(2002e1) Steady-State Thermal Transmission Properties by Means of the Heat Flow Meter Apparatus
ASTM D 1654	(1992; R 2000) Evaluation of Painted or Coated Specimens Subjected to Corrosive Environments
ASTM D 2244	(2002e1) Calculation of Color Tolerances and Color Differences from Instrumentally Measured Color Coordinates
ASTM D 2247	(2002) Testing Water Resistance of Coatings in 100% Relative Humidity

ASTM D 2794	(1993; R 1999el) Resistance of Organic Coatings to the Effects of Rapid Deformation (Impact)
ASTM D 3359	(2002) Measuring Adhesion by Tape Test
ASTM D 4214	(1998) Evaluating the Degree of Chalking of Exterior Paint Films
ASTM D 522	(1993a; R 2001) Mandrel Bend Test of Attached Organic Coatings
ASTM D 5894	(1996) Cyclic Salt Fog/UV Exposure of Painted Metal, (Alternating Exposures in a Fog/Dry Cabinet and a UV/Condensation Cabinet)
ASTM D 610	(2001) Evaluating Degree of Rusting on Painted Steel Surfaces
ASTM D 714	(2002) Evaluating Degree of Blistering of Paints
ASTM D 968	(1993; R 2001) Abrasion Resistance of Organic Coatings by Falling Abrasive
ASTM E 84	(2003) Surface Burning Characteristics of Building Materials
ASTM E 96	(2000e1) Water Vapor Transmission of Materials
ASTM G 154	(2000ae1) Operating Fluorescent Light Apparatus for UV Exposure of Nonmetallic Materials

1.2 GENERAL REQUIREMENTS

1.2.1 Design

Criteria, loading combinations, and definitions shall be in accordance with ASCE 7. Maximum calculated fiber stress shall not exceed the allowable value in the AISI or AA manuals; a one third overstress for wind is allowed. Midspan deflection under maximum design loads shall be limited to L/180. Contract drawings show the design wind loads and the extent and general assembly details of the metal siding. Members and connections not shown on the drawings shall be designed by the Contractor. Siding panels and accessories shall be the products of the same manufacturer. Steel siding design shall be in accordance with AISI SG-973. Aluminum siding design shall be in accordance with AA ADM.

1.2.2 Architectural Considerations

Panels profile shall be as shown on the drawings.

1.3 SUBMITTALS

Government approval is required for submittals with a "G" designation;

submittals not having a "G" designation are for information only. When used, a designation following the "G" designation identifies the office that will review the submittal for the Government. The following shall be submitted in accordance with Section 01330 SUBMITTAL PROCEDURES:

SD-02 Shop Drawings

Siding; G, AE

Drawings consisting of catalog cuts, design and erection drawings, shop coating and finishing specifications, and other data as necessary to clearly describe design, materials, sizes, layouts, construction details, fasteners, and erection. Drawings shall be accompanied by engineering design calculations for the siding panels.

SD-04 Samples

Accessories; G, RO

One sample of each type of flashing, trim, closure, cap and similar items. Size shall be sufficient to show construction and configuration.

Siding; G, RO

One piece of each type and finish (exterior and interior) to be used, 9 inches long, full width.

Fasteners; G, RO

Two samples of each type to be used with statement regarding intended use. If so requested, random samples of bolts, nuts, and washers as delivered to the jobsite shall be taken in the presence of the Contracting Officer and provided to the Contracting Officer for testing to establish compliance with specified requirements.

SD-07 Certificates

Siding
Installation
Accessories

Certificates attesting that the panels and accessories conform to the requirements specified. Certified laboratory test reports showing that the sheets to be furnished are produced under a continuing quality control program and that a representative sample consisting of not less than 5 pieces has been tested and has met the quality standards specified for factory color finish. Mill certification for structural bolts, siding, and wall liner panels.

1.4 DELIVERY AND STORAGE

Materials shall be delivered to the site in a dry and undamaged condition and stored out of contact with the ground. Materials shall be covered with weathertight coverings and kept dry. Storage accommodations for metal siding shall provide good air circulation and protection from surface staining.

1.5 WARRANTIES

The Contractor shall provide a weather tight warranty for the metal siding for a period of 20 years to include siding panel assembly, 10 years against the wear of color finish, and 10 years against the corrosion of fasteners caused by ordinary wear and tear by the elements. The warranties shall start upon final acceptance of the work or the date the Government takes possession, whichever is earlier.

PART 2 PRODUCTS

2.1 SIDING

Panels shall be steel or aluminum and shall have a factory color finish. Length of sheets shall be sufficient to cover the entire height of any unbroken wall surface. Width of sheets with interlocking ribs shall provide not less than 12 inches of coverage in place.

2.1.1 Wall Panels

Wall panels shall have interlocking ribs for securing adjacent sheets and show flush seams to the exterior. Wall panels shall be fastened to framework using concealed fasteners.

2.1.2 Steel Panels

Zinc-coated steel conforming to ASTM A 653/A 653M; aluminum-zinc alloy coated steel conforming to ASTM A 792/A 792M, AZ 55 coating; or aluminum-coated steel conforming to ASTM A 463/A 463M, Type 2, coating designation T2 65. Uncoated wall panels shall be 0.024 inchthick minimum. Panels that have become wet during shipment but have not started to oxidize shall be dried, retreated, and re-oiled.

2.1.3 Aluminum Panels

Alloy conforming to ASTM B 209, temper as required for the forming operation, minimum 0.032 inch thick.

2.2 FACTORY COLOR FINISH

Panels shall have a factory applied polyvinylidene fluoride finish on the exposed side. The exterior finish shall consist of a baked-on topcoat with an appropriate prime coat. Color shall match the color indicated on the drawings. . The exterior coating shall be a nominal 1 mil thickness consisting of a topcoat of not less than 0.7 mil dry film thickness and the paint manufacturer's recommended primer of not less than 0.2 mil thickness. The interior color finish shall consist of a 0.2 milthick prime coat. The exterior color finish shall meet the test requirements specified below.

2.2.1 Salt Spray Test

A sample of the sheets shall withstand a cyclic corrosion test for a minimum of 2016 hours in accordance with ASTM D 5894, including the scribe requirement in the test. Immediately upon removal of the panel from the test, the coating shall receive a rating of not less than 10, no blistering, as determined by ASTM D 714; 10, no rusting, as determined by ASTM D 610; and a rating of 6, 1/16 to 1/8 inch failure at scribe, as determined by ASTM D 1654.

2.2.2 Formability Test

When subjected to testing in accordance with ASTM D 522 Method B, 1/8 inch diameter mandrel, the coating film shall show no evidence of fracturing to the naked eye.

2.2.3 Accelerated Weathering, Chalking Resistance and Color Change

A sample of the sheets shall be tested in accordance with ASTM G 154, test condition UVA-340 lamp, 4h UV at 60 degrees C followed by 4h CON at 50 degrees C for 8 total hours. The coating shall withstand the weathering test without cracking, peeling, blistering, loss of adhesion of the protective coating, or corrosion of the base metal. Protective coating with an adhesion rating of less than 4B when tested in accordance with ASTM D 3359, Test Method B, shall be considered as an area indicating loss of adhesion. Following the accelerated weathering test, the coating shall have a chalk rating not less than No. 8 in accordance with ASTM D 4214 test procedures, and the color change shall not exceed 5 CIE or Hunter Lab color difference (delta E) units in accordance with ASTM D 2244. For sheets required to have a low gloss finish, the chalk rating shall be not less than No. 6 and the color difference shall be not greater than 7 units.

2.2.4 Humidity Test

When subjected to a humidity cabinet test in accordance with ASTM D 2247 for 1000 hours, a scored panel shall show no signs of blistering, cracking, creepage or corrosion.

2.2.5 Impact Resistance

Factory-painted sheet shall withstand direct and reverse impact in accordance with ASTM D 2794 0.500 inch diameter hemispherical head indenter, equal to 1.5 times the metal thickness in mils, expressed in inch-pounds, with no loss of adhesion.

2.2.6 Abrasion Resistance Test

When subjected to the falling sand test in accordance with ASTM D 968, Method A, the coating system shall withstand a minimum of 50 liters of sand before the appearance of the base metal. The term "appearance of base metal" refers to the metallic coating on steel or the aluminum base metal.

2.3 ACCESSORIES

Flashing, trim, metal closure strips, caps, and similar metal accessories shall be the manufacturer's standard products. Exposed metal accessories shall be finished to match the panels furnished. Molded closure strips shall be bituminous-saturated fiber, closed-cell or solid-cell synthetic rubber or neoprene, or polyvinyl chlorided premolded to match configuration of the panels and shall not absorb or retain water.

2.4 FASTENERS

Fasteners for steel panels shall be zinc-coated steel, aluminum, corrosion resisting steel, or nylon capped steel, type and size specified below or as otherwise approved for the applicable requirements. Fasteners for aluminum panels shall be aluminum or corrosion resisting steel. Fasteners for attaching wall panels to supports shall provide both tensile and shear

strength of not less than 750 pounds per fastener. Fasteners for accessories shall be the manufacturer's standard. Exposed wall fasteners shall be color finished or provided with plastic color caps to match the panels. Nonpenetrating fastener system for wall panels using concealed clips shall be manufacturer's standard for the system provided.

2.4.1 Screws

Screws shall be as recommended by the manufacturer.

2.4.2 Blind Rivets

Blind rivets shall be aluminum with 3/16 inch nominal diameter shank or stainless steel with 1/8 inch nominal diameter shank. Rivets shall be threaded stem type if used for other than the fastening of trim. Rivets with hollow stems shall have closed ends.

2.4.3 Bolts

Bolts shall be not less than 1/4 inch diameter, shouldered or plain shank as required, with proper nuts.

2.5 INSULATION

Thermal resistance of insulation shall be not less than the R-values shown on the contract drawings. R-values shall be determined at a mean temperature of 75 degrees F in accordance with ASTM C 518. Insulation shall be a standard product with the insulation manufacturer, factory-marked or identified with insulation manufacturer's name or trademark and R-value. Identification shall be on individual pieces or individual packages. Blanket insulation shall have a facing as specified in paragraph VAPOR RETARDER. Insulation , including facings, shall have a flame spread not in excess of 75 and a smoke developed rating not in excess of 450 when tested in accordance with ASTM E 84. The stated R-value of the insulation shall be certified by an independent Registered Professional Engineer if tests are conducted in the insulation manufacturer's laboratory. Contractor shall comply with EPA requirements in accordance with Section 01670 RECYCLED / RECOVERED MATERIALS.

2.6 VAPOR RETARDER

2.6.1 Vapor Retarders as Integral Facing

Insulation facing shall have a permeability of 0.02 perm or less when tested in accordance with ASTM E 96. Facing shall be reinforced polypropylene kraft laminate (PSK). Facings and finishes shall be factory applied.

2.7 SEALANT

Sealant shall be an elastomeric type containing no oil or asphalt. Exposed sealant shall be colored to match the applicable building color and shall cure to a rubberlike consistency.

2.8 GASKETS AND INSULATING COMPOUNDS

Gaskets and insulating compounds shall be nonabsorptive and suitable for insulating contact points of incompatible materials. Insulating compounds shall be nonrunning after drying.

PART 3 EXECUTION

3.1 INSTALLATION

Installation shall be in accordance with the manufacturer's erection instructions and drawings. Dissimilar materials which are not compatible when contacting each other shall be insulated from each other by means of gaskets or insulating compounds. Improper or mislocated drill holes shall be plugged with an oversize screw fastener and gasketed washer; however, panels with an excess of such holes or with such holes in critical locations shall not be used. Exposed surfaces and edges shall be kept clean and free from sealant, metal cuttings, hazardous burrs, and other foreign material. Stained, discolored, or damaged sheets shall be removed from the site.

3.1.1 Siding and Accessories

Siding shall be applied with the longitudinal configurations in the vertical position. Accessories shall be fastened into framing members, except as otherwise approved. Closure strips shall be provided as indicated and where necessary to provide weathertight construction.

3.1.1.1 Concealed Fastener Wall Panels

Panels shall be fastened to framing members with concealed fastening clips or other concealed devices standard with the manufacturer. Spacing of fastening clips and fasteners shall be in accordance with the manufacturer's written instructions. Spacing of fasteners and anchor clips along the panel interlocking ribs shall not exceed 12 incheson center except when otherwise approved. Fasteners shall not puncture metal sheets except as approved for flashing, closures, and trim; exposed fasteners shall be installed in straight lines. Interlocking ribs shall be sealed with factory-applied sealant. Joints at accessories shall be sealed.

-- End of Section --

SECTION TABLE OF CONTENTS

DIVISION 07 - THERMAL AND MOISTURE PROTECTION

SECTION 07416A

STRUCTURAL STANDING SEAM METAL ROOF (SSSMR) SYSTEM

11/01

PART 1 GENERAL

1.1 REFERENCES
1.2 GENERAL REQUIREMENTS
1.2.1 Structural Standing Seam Metal Roof (SSSMR) System
1.2.2 Manufacturer
1.2.3 Installer
1.3 DESIGN REQUIREMENTS
1.3.1 Design Criteria
1.3.2 Dead Loads
1.3.3 Live Loads
1.3.3.1 Concentrated Loads
1.3.3.2 Uniform Loads
1.3.4 Roof Snow Loads
1.3.5 Wind Loads
1.3.6 Thermal Loads
1.3.7 Framing Members Supporting the SSSMR System
1.3.8 Roof Fascia and Soffit Panels Design
1.3.9 Accessories and Their Fasteners
1.4 PERFORMANCE REQUIREMENTS
1.5 SUBMITTALS
1.6 DELIVERY AND STORAGE
1.7 WARRANTIES
1.7.1 Contractor's Weathertightness Warranty
1.7.2 Manufacturer's Material Warranties.
1.8 COORDINATION MEETING

PART 2 PRODUCTS

2.1 ROOF, FASCIA AND SOFFIT PANELS
2.1.1 Steel Panels
2.1.2 Aluminum Panels
2.2 CONCEALED ANCHOR CLIPS
2.3 ACCESSORIES
2.4 FASTENERS
2.4.1 Screws
2.4.2 Bolts
2.4.3 Structural Blind Fasteners
2.5 SUBPURLINS
2.6 FACTORY COLOR FINISH
2.6.1 Salt Spray Test
2.6.2 Formability Test
2.6.3 Accelerated Weathering, Chalking Resistance and Color Change
2.6.4 Humidity Test
2.6.5 Impact Resistance
2.6.6 Abrasion Resistance Test
2.6.7 Specular Gloss
2.6.8 Pollution Resistance

2.7 INSULATION
2.7.1 Polyisocyanurate Rigid Board Insulation for Use Above a Roof Deck
2.8 INSULATION RETAINERS
2.9 SEALANT
2.10 GASKETS AND INSULATING COMPOUNDS
2.11 VAPOR RETARDER (UNDERLAYMENT)
2.11.2 Vapor Retarders Separate from Insulation
2.12 EPDM RUBBER BOOTS

PART 3 EXECUTION

3.1 INSTALLATION
3.1.1 Field Forming of Panels for Unique Area
3.1.2 Subpurlins
3.1.3 Roof Panel Installation
3.1.4 Concealed Anchor Clips
3.2 INSULATION INSTALLATION
3.2.1 Board Insulation
3.3 VAPOR RETARDER INSTALLATION
3.3.1 Separate Vapor Retarder (Underlayment)
3.4 CLEANING AND TOUCH-UP

-- End of Section Table of Contents --

UFGS-07416A (November 2001)

SECTION 07416A

STRUCTURAL STANDING SEAM METAL ROOF (SSSMR) SYSTEM
11/01

PART 1 GENERAL

1.1 REFERENCES

The publications listed below form a part of this specification to the extent referenced. The publications are referred to in the text by basic designation only.

ALUMINUM ASSOCIATION (AA)

AA ADM	(2000) Aluminum Design Manual: Specification & Guidelines for Aluminum Structures

AMERICAN IRON AND STEEL INSTITUTE (AISI)

AISI SG-973	(1996) Cold-Formed Steel Design Manual

AMERICAN SOCIETY FOR TESTING AND MATERIALS (ASTM)

ASTM A 463/A 463M	(2000) Steel Sheet, Aluminum-Coated, by the Hot-Dip Process
ASTM A 653/A 653M	(2000) Steel Sheet, Zinc-Coated (Galvanized) or Zinc-Iron Alloy-Coated (Galvannealed) by the Hot-Dip Process
ASTM A 792/A 792M	(1999) Steel Sheet, 55% Aluminum-Zinc Alloy-Coated by the Hot-Dip Process
ASTM B 209	(2000) Aluminum and Aluminum-Alloy Sheet and Plate
ASTM C 1289	(1998) Faced Rigid Cellular Polyisocyanurate Thermal Insulation Board
ASTM C 518	(1998) Steady-State Heat Flux Measurements and Thermal Transmission Properties by Means of the Heat Flow Meter Apparatus
ASTM D 1308	(1987; R 1998) Effect of Household Chemicals on Clear and Pigmented Organic Finishes
ASTM D 1654	(1992) Evaluation of Painted or Coated Specimens Subjected to Corrosive Environments
ASTM D 2244	(1995) Calculation of Color Differences from Instrumentally Measured Color

	Coordinates
ASTM D 2247	(1999) Testing Water Resistance of Coatings in 100% Relative Humidity
ASTM D 2794	(1993; R 1999el) Resistance of Organic Coatings to the Effects of Rapid Deformation (Impact)
ASTM D 3359	(1997) Measuring Adhesion by Tape Test
ASTM D 4214	(1998) Evaluating Degree of Chalking of Exterior Paint Films
ASTM D 522	(1993a) Mandrel Bend Test of Attached Organic Coatings
ASTM D 523	(1989; R 1999) Specular Gloss
ASTM D 5894	(1996) Standard Practice for Cyclic Salt Fog/UV Exposure of Painted Metal, (Alternating Exposures in a Fog/Dry Cabinet and a UV/Condensation Cabinet)
ASTM D 610	(1995) Evaluating Degree of Rusting on Painted Steel Surfaces
ASTM D 714	(1987; R 1994el) Evaluating Degree of Blistering of Paints
ASTM D 968	(1993) Abrasion Resistance of Organic Coatings by Falling Abrasive
ASTM E 1592	(1998) Structural Performance of Sheet Metal Roof and Siding Systems by Uniform Static Air Pressure Difference
ASTM E 84	(2000a) Surface Burning Characteristics of Building Materials
ASTM G 154	(2000ael) Standard Practice for Operating Fluorescent Light Apparatus for UV Exposure of Nonmetallic Materials

AMERICAN SOCIETY OF CIVIL ENGINEERS (ASCE)

ASCE 7	(1998) Minimum Design Loads for Buildings and Other Structures

1.2 GENERAL REQUIREMENTS

The Contractor shall furnish a commercially available roofing system which satisfies all requirements contained herein and has been verified by load testing and independent design analyses to meet the specified design requirements.

1.2.1 Structural Standing Seam Metal Roof (SSSMR) System

The SSSMR system covered under this specification shall include the entire roofing system; the standing seam metal roof, fascia and soffit panels, fasteners, connectors, roof securement components, and assemblies tested and approved in accordance with ASTM E 1592. In addition, the system shall consist of panel finishes, slip sheet, insulation, vapor retarder, all accessories, components, and trim and all connections with roof, fascia and soffit panels. This includes roof penetration items such as vents, curbs, skylights; interior or exterior gutters and downspouts; eaves, ridge, hip, valley, rake, gable, wall, or other roof system flashings installed and any other components specified within this contract to provide a weathertight roof system.

1.2.2 Manufacturer

The SSSMR system shall be the product of a manufacturer who has been in the practice of manufacturing and designing SSSMR systems for a period of not less than 3 years and has been involved in at least five projects similar in size and complexity to this project.

1.2.3 Installer

The installer shall be certified by the SSSMR system manufacturer to have experience in installing at least three projects that are of comparable size, scope and complexity as this project for the particular roof system furnished. The installer may be either employed by the manufacturer or be an independent installer.

1.3 DESIGN REQUIREMENTS

The design of the SSSMR system shall be provided by the Contractor as a complete system. Members and connections not indicated on the drawings shall be designed by the Contractor. Roof, fascia and soffit panels, components, transitions, accessories, and assemblies shall be supplied by the same roofing system manufacturer.

1.3.1 Design Criteria

Design criteria shall be in accordance with ASCE 7.

1.3.2 Dead Loads

The dead load shall be the weight of the SSSMR system. Collateral loads such as sprinklers, mechanical and electrical systems, and ceilings shall not be attached to the panels.

1.3.3 Live Loads

1.3.3.1 Concentrated Loads

The panels and anchor clips shall be capable of supporting a 300 pound concentrated load. The concentrated load shall be applied at the panel midspan and will be resisted by a single standing seam metal roof panel assumed to be acting as a beam. The undeformed shape of the panel shall be used to determine the section properties.

1.3.3.2 Uniform Loads

The panels and concealed anchor clips shall be capable of supporting a minimum uniform live load of 20 psf.

1.3.4 Roof Snow Loads

The design roof snow loads shall be as shown on the contract drawings.

1.3.5 Wind Loads

The design wind uplift pressure for the roof system shall be as shown on the contract drawings. The design uplift force for each connection assembly shall be that pressure given for the area under consideration, multiplied by the tributary load area of the connection assembly. The safety factor listed below shall be applied to the design force and compared against the ultimate capacity. Prying shall be considered when figuring fastener design loads.

a. Single fastener in each connection.....3.0

b. Two or more fasteners in each connection...2.25

1.3.6 Thermal Loads

Roof panels shall be free to move in response to the expansion and contraction forces resulting from a total temperature range of 240 degrees F during the life of the structure.

1.3.7 Framing Members Supporting the SSSMR System

Any additions/revisions to framing members supporting the SSSMR system to accommodate the manufacturer/fabricator's design shall be the Contractor's responsibility and shall be submitted for review and approval. New or revised framing members and their connections shall be designed in accordance with AISI SG-973 . Maximum deflection under applied live load, snow, or wind load shall not exceed 1/180 of the span length.

1.3.8 Roof Fascia and Soffit Panels Design

Steel panels shall be designed in accordance with AISI SG-973. Aluminum panels shall be designed in accordance with AA ADM. The structural section properties used in the design of the panels shall be determined using the unloaded shape of the roof fascia and soffit panels. The calculated panel deflection from concentrated loads shall not exceed 1/180 of the span length. The calculated panel deflection under applied live load, snow, or wind load shall not exceed 1/180 times the span length. Deflections shall be based on panels being continuous across three or more supports. Deflection shall be calculated and measured along the major ribs of the panels.

1.3.9 Accessories and Their Fasteners

Accessories and their fasteners shall be capable of resisting the specified design wind uplift forces and shall allow for thermal movement of the roof panel system. Exposed fasteners shall not restrict free movement of the roof panel system resulting from thermal forces. There shall be a minimum of two fasteners per clip. Single fasteners with a minimum diameter of 3/8 inch will be allowed when the supporting structural members are prepunched

or predrilled.

1.4 PERFORMANCE REQUIREMENTS

The SSSMR shall be tested for wind uplift resistance in accordance with ASTM E 1592; SSSMR systems previously tested and approved by the Corps of Engineers' STANDARD TEST METHOD FOR STRUCTURAL PERFORMANCE OF SSMRS BY UNIFORM STATIC AIR PRESSURE DIFFERENCE may be acceptable. Two tests shall be performed. Test 1 shall simulate the edge condition with one end having crosswise restraint and other end free of crosswise restraint. The maximum span length for the edge condition shall be 30 inches. Test 2 shall simulate the interior condition with both ends free of crosswise restraint. The maximum span length for the interior condition shall be 5.0 feet. External reinforcement, such as clamps on the ribs, shall not be installed to improve uplift resistance. Bolts through seams shall not be installed.

1.5 SUBMITTALS

Government approval is required for submittals with a "G" designation; submittals not having a "G" designation are for information only. When used, a designation following the "G" designation identifies the office that will review the submittal for the Government. The following shall be submitted in accordance with Section 01330 SUBMITTAL PROCEDURES:

SD-02 Shop Drawings

Structural Standing Seam Metal Roof System; G, AE.

Metal roofing drawings and specifications and erection drawings; shop coating and finishing specifications; and other data as necessary to clearly describe design, materials, sizes, layouts, standing seam configuration, construction details, provisions for thermal movement, line of panel fixity, fastener sizes and spacings, sealants and erection procedures. Drawings shall reflect the intent of the architectural detailing using the manufacturer's proprietary products and fabricated items as required. The SSSMR system shop drawings shall be provided by the metal roofing manufacturer.

SD-03 Product Data

Design Analysis; G, AE.

Design analysis signed by a Registered Professional Engineer employed by the SSSMR manufacturer. The design analysis shall include a list of the design loads, and complete calculations for the support system (when provided by the Contractor), roofing system and its components; valley designs, gutter/downspout calculations, screw pullout test results, and shall indicate how expected thermal movements are accommodated.

Qualifications

Qualifications of the manufacturer and installer.

SD-04 Samples

Accessories;G, RO

One sample of each type of flashing, trim, closure, thermal spacer block, cap and similar items. Size shall be sufficient to show construction and configuration.

Roof,Fascia and Soffit Panels;G, RO

One piece of each type to be used, 9 inches long, full width.

Factory Color Finish;G, RO

Three 3 by 5 inches samples of each type and color.

Fasteners; G, RO

Two samples of each type to be used, with statement regarding intended use. If so requested, random samples of bolts, nuts, and washers as delivered to the job site shall be taken in the presence of the Contracting Officer and provided to the Contracting Officer for testing to establish compliance with specified requirements.

Concealed Anchor Clips;G, RO

Two samples of each type used.

SD-06 Test Reports

Test Report for Uplift Resistance of the SSSMR; G, AE.

The report shall include the following information:

a. Details of the SSSMR system showing the roof panel cross-section with dimensions and thickness.

b. Details of the anchor clip, dimensions, and thickness.

c. Type of fasteners, size, and the number required for each connection.

d. Purlins/subpurlins size and spacing used in the test.

e. Description of the seaming operation including equipment used.

f. Maximum allowable uplift pressures. These pressures are determined from the ultimate load divided by a factor of safety equal to 1.65.

g. Any additional information required to identify the SSSMR system tested.

h. Signature and seal of an independent registered engineer who witnessed the test.

SD-07 Certificates

Structural Standing Seam Metal Roof System

a. Certification that the actual thickness of uncoated sheets used in SSSMRS components including roofing panels, subpurlins, and concealed anchor clips complies with specified requirements.

b. Certification that materials used in the installation are mill certified.

c. Previous certification of SSSMR system tested under the Corps of Engineers' Standard Test Method in lieu of ASTM E 1592 testing.

d. Certification that the sheets to be furnished are produced under a continuing quality control program and that a representative sample consisting of not less than three pieces has been tested and has met the quality standards specified for factory color finish.

e. Certification of installer. Installer certification shall be furnished.

f. Warranty certificate. At the completion of the project the Contractor shall furnish signed copies of the 5-year Warranty for Structural Standing Seam Metal Roof (SSSMR) System, a sample copy of which is attached to this section, and the 20-year Manufacturer's Material Warranties, and the manufacturer's 20-year system weathertightness warranty.

Insulation

Certificate attesting that the polyisocyanurate insulation furnished for the project contains recovered material, and showing an estimated percent of such recovered material.

1.6 DELIVERY AND STORAGE

Materials shall be delivered to the site in a dry and undamaged condition and stored out of contact with the ground. Materials shall be covered with weathertight coverings and kept dry. Storage conditions shall provide good air circulation and protection from surface staining.

1.7 WARRANTIES

The SSSMR system shall be warranted as outlined below. Any emergency temporary repairs conducted by the owner shall not negate the warranties.

1.7.1 Contractor's Weathertightness Warranty

The SSSMR system shall be warranted by the Contractor on a no penal sum basis for a period of five years against material and workmanship deficiencies; system deterioration caused by exposure to the elements and/or inadequate resistance to specified service design loads, water leaks, and wind uplift damage. The SSSMR system covered under this warranty shall include the entire roofing system including, but not limited to, the standing seam metal roof, fascia and soffit panels, fasteners, connectors, roof securement components, and assemblies tested and approved in accordance with ASTM E 1592. In addition, the system shall consist of panel finishes, slip sheet, insulation, vapor retarder, all accessories, components, and trim and all connections with roof, fascia and soffit panels.

This includes roof penetration items such as vents, curbs, and skylights; interior or exterior gutters and downspouts; eaves, ridge, hip, valley, rake, gable, wall, or other roof system flashings installed and any other components specified within this contract to provide a weathertight roof system; and items specified in other sections of these specifications that are part of the SSSMR system. All material and workmanship deficiencies, system deterioration caused by exposure to the elements and/or inadequate resistance to specified design loads, water leaks and wind uplift damage shall be repaired as approved by the Contracting Officer. See the attached Contractor's required warranty for issue resolution of warrantable defects. This warranty shall warrant and cover the entire cost of repair or replacement, including all material, labor, and related markups. The Contractor shall supplement this warranty with written warranties from the installer and system manufacturer, which shall be submitted along with Contractor's warranty; however, the Contractor shall be ultimately responsible for this warranty. The Contractor's written warranty shall be as outlined in attached WARRANTY FOR STRUCTURAL STANDING SEAM METAL ROOF (SSSMR) SYSTEM, and shall start upon final acceptance of the facility. It is required that the Contractor provide a separate bond in an amount equal to the installed total roofing system cost in favor of the owner (Government) covering the Contractor's warranty responsibilities effective throughout the five year Contractor's warranty period for the entire SSSMR system as outlined above.

1.7.2 Manufacturer's Material Warranties.

The Contractor shall furnish, in writing, the following manufacturer's material warranties which cover all SSSMR system components such as roof panels, anchor clips and fasteners, flashing, accessories, and trim, fabricated from coil material:

a. A manufacturer's 20 year material warranty warranting that the aluminum, zinc-coated steel, aluminum-zinc alloy coated steel or aluminum-coated steel as specified herein will not rupture, structurally fail, fracture, deteriorate, or become perforated under normal design atmospheric conditions and service design loads. Liability under this warranty shall be limited exclusively to the cost of either repairing or replacing nonconforming, ruptured, perforated, or structurally failed coil material.

b. A manufacturer's 20 year exterior material finish warranty on the factory colored finish warranting that the finish, under normal atmospheric conditions at the site, will not crack, peel, or delaminate; chalk in excess of a numerical rating of eight, as determined by ASTM D 4214 test procedures; or change color in excess of five CIE or Hunter Lab color difference (delta E) units in accordance with ASTM D 2244. Liability under this warranty is exclusively limited to refinishing with an air-drying version of the specified finish or replacing the defective coated material.

c. A roofing system manufacturer's 20 year, non-prorated, system weathertightness warranty.

1.8 COORDINATION MEETING

A coordination meeting shall be held 30 days prior to the first submittal, for mutual understanding of the Structural Standing Seam Metal Roof (SSSMR) System contract requirements. This meeting shall take place at the building site and shall include representatives from the Contractor, the roof system manufacturer, the roofing supplier, the erector, the SSSMR

design engineer of record, and the Contracting Officer. All items required by paragraph SUBMITTALS shall be discussed, including applicable standard manufacturer shop drawings, and the approval process. The Contractor shall coordinate time and arrangements for the meeting.

PART 2 PRODUCTS

2.1 ROOF, FASCIA AND SOFFIT PANELS

Panels shall be steel or aluminum and shall have a factory color finish. Length of sheets shall be sufficient to cover the entire length of any unbroken roof slope for slope lengths that do not exceed 30 feet. When length of run exceeds 30 feet and panel laps are provided, each sheet in the run shall extend over three or more supports. Sheets longer than 100 feet may be furnished if approved by the Contracting Officer. Width of sheets shall provide not more than 24 inches of coverage in place. SSSMR system with roofing panels greater than 12 inches in width shall have standing seams rolled during installation by an electrically driven seaming machine. Height of standing seams shall be not less than 2 inches for rolled seam and 1-1/2 inches for seams that are not rolled. Fascia and soffit panels shall have flush seam configuration.

2.1.1 Steel Panels

Steel panels shall be zinc-coated steel conforming to ASTM A 653/A 653M; aluminum-zinc alloy coated steel conforming to ASTM A 792/A 792M, AZ 50 coating; or aluminum-coated steel conforming to ASTM A 463/A 463M, Type 2, coating designation T2 65. Zinc, zinc-aluminum alloy or aluminum coated panels shall be 0.023 inch thick minimum. Panels shall be within 95 percent of reported tested thickness as noted in wind uplift resistance testing required in paragraph PERFORMANCE REQUIREMENTS. Prior to shipment, mill finish panels shall be treated with a passivating chemical to inhibit the formation of oxide corrosion products. Panels that have become wet during shipment and have started to oxidize shall be rejected.

2.1.2 Aluminum Panels

Alloy conforming to ASTM B 209, temper as required for the forming operation, minimum 0.032 inch thick.

2.2 CONCEALED ANCHOR CLIPS

Concealed anchor clips shall be the same as the tested roofing system. Clip bases shall have factory punched or drilled holes for attachment. Clips shall be made from multiple pieces with the allowance for the total thermal movement required to take place within the clip. Single piece clips may be acceptable when the manufacturer can substantiate that the system can accommodate the thermal cyclic movement under sustained live or snow loads.

2.3 ACCESSORIES

Flashing, trim, metal closure strips, caps and similar metal accessories shall be the manufacturer's standard products. Exposed metal accessories shall be finished to match the panels furnished. Molded closure strips shall be bituminous-saturated fiber, closed-cell or solid-cell synthetic rubber or neoprene, or polyvinyl chloride premolded to match configuration of the panels and shall not absorb or retain water. Die cast metal closures shall be installed with double bead tape sealant and fasteners that stitch

the panel to a 16 gage preformed backer plate to ensure a positive compression of the tape sealant. The use of a continuous angle butted to the panel ends to form a closure will not be allowed.

2.4 FASTENERS

Fasteners for steel roof, fascia and soffit panels shall be zinc-coated steel, aluminum, corrosion resisting steel, or nylon capped steel, type and size specified below or as otherwise approved for the applicable requirements. Fasteners for aluminum roof, fascia and soffit panels shall be aluminum or corrosion resisting steel. Fasteners for structural connections shall provide both tensile and shear ultimate strengths of not less than 750 pounds per fastener. Fasteners for accessories shall be the manufacturer's standard. Exposed roof fasteners shall be sealed or have sealed washers on the exterior side of the roof to waterproof the fastener penetration. Washer material shall be compatible with the roofing; have a minimum diameter of 3/8 inch for structural connections; and gasketed portion of fasteners or washers shall be neoprene or other equally durable elastomeric material approximately 1/8 inch thick. Exposed fasteners for factory color finished panels shall be factory finished to match the color of the panels.

2.4.1 Screws

Screws for attaching anchor devices shall be not less than No. 14. Actual screw pull out test results shall be performed for the actual material gage and yield strength of the structural purlins or subpurlins to which the clip is to be anchored/attached. Other screws shall be as recommended by the manufacturer to meet the strength design requirements of the panels.

2.4.2 Bolts

Bolts shall be not less than 1/4 inch diameter, shouldered or plain shank as required, with locking washers and nuts.

2.4.3 Structural Blind Fasteners

Blind screw-type expandable fasteners shall be not less than 1/4 inch diameter. Blind (pop) rivets shall be not less than 9/32 inch minimum diameter.

2.5 SUBPURLINS

Cold formed supporting structural members/subpurlins shall have a minimum thickness of 0.059 inches and a minimum tensile yield strength of 50000 psi. Hot rolled structural members shall have a minimum thickness of 0.25 inches and a minimum tensile yield strength of 36000 psi. Subpurlins shall be galvanized.

2.6 FACTORY COLOR FINISH

Panels shall have a factory applied polyvinylidene fluoride finish on the exposed side. The exterior finish shall consist of a baked-on topcoat with an appropriate prime coat. Color shall match the color indicated on the drawings . The exterior coating shall be a nominal 1 mil thickness consisting of a topcoat of not less than 0.7 mil dry film thickness and the paint manufacturer's recommended primer of not less than 0.2 mil thickness. The interior color finish shall consist of a 0.2 mil thick prime coat. The exterior color finish shall meet the test requirements specified below.

2.6.1 Salt Spray Test

A sample of the sheets shall withstand a cyclic corrosion test for a minimum of 2016 hours in accordance with ASTM D 5894, including the scribe requirement in the test. Immediately upon removal of the panel from the test, the coating shall receive a rating of not less than 10, no blistering, as determined by ASTM D 714; 10, no rusting, as determined by ASTM D 610; and a rating of 6, over 21/16 to 1/8 inch failure at scribe, as determined by ASTM D 1654.

2.6.2 Formability Test

When subjected to testing in accordance with ASTM D 522 Method B, 1/8 inch diameter mandrel, the coating film shall show no evidence of cracking to the naked eye.

2.6.3 Accelerated Weathering, Chalking Resistance and Color Change

A sample of the sheets shall be tested in accordance with ASTM G 154, test condition UVA-340 lamp, 4h UV at 60 degrees C followed by 4h CON at 50 degrees C for 8 total hours. The coating shall withstand the weathering test without cracking, peeling, blistering, loss of adhesion of the protective coating, or corrosion of the base metal. Protective coating with an adhesion rating less than 4B when tested in accordance with ASTM D 3359, Test Method B, shall be considered as an area indicating loss of adhesion. Following the accelerated weathering test, the coating shall have a chalk rating not less than No. 8 in accordance with ASTM D 4214 test procedures, and the color change shall not exceed 5 CIE or Hunter Lab color difference (delta E) units in accordance with ASTM D 2244.

2.6.4 Humidity Test

When subjected to a humidity cabinet test in accordance with ASTM D 2247 for 1000 hours, a scored panel shall show no signs of blistering, cracking, creepage or corrosion.

2.6.5 Impact Resistance

Factory-painted sheet shall withstand direct and reverse impact in accordance with ASTM D 2794 0.500 inch diameter hemispherical head indenter, equal to 1.5 times the metal thickness in mils, expressed in inch-pounds, with no cracking.

2.6.6 Abrasion Resistance Test

When subjected to the falling sand test in accordance with ASTM D 968, Method A, the coating system shall withstand a minimum of 50 liters of sand before the appearance of the base metal. The term "appearance of base metal" refers to the metallic coating on steel or the aluminum base metal.

2.6.7 Specular Gloss

Finished roof surfaces shall have a specular gloss value of 10 or less at an angle of 85 degrees when measured in accordance with ASTM D 523.

2.6.8 Pollution Resistance

Coating shall show no visual effects when covered spot tested in a 10

percent hydrochloric acid solution for 24 hours in accordance with ASTM D 1308.

2.7 INSULATION

Thermal resistance of insulation shall be not less than the R-values shown on the contract drawings. R-values shall be determined at a mean temperature of 75 degrees F in accordance with ASTM C 518. Insulation shall be a standard product with the insulation manufacturer, factory marked or identified with insulation manufacturer's name or trademark and R-value. Identification shall be on individual pieces or individual packages. Insulation shall have a flame spread not in excess of 50 and a smoke developed rating not in excess of 450 when tested in accordance with ASTM E 84. The stated R-value of the insulation shall be certified by an independent Registered Professional Engineer if tests are conducted in the insulation manufacturer's laboratory. Contractor shall comply with EPA requirements in accordance with Section 01670 RECYCLED / RECOVERED MATERIALS.

2.7.1 Polyisocyanurate Rigid Board Insulation for Use Above a Roof Deck

Polyisocyanurate insulation shall conform to ASTM C 1289, Type II, (having a minimum recovered material content of 20 percent by weight of core material in the polyisocyanurate portion). For impermeable faced polyisocyanurate (Ex: aluminum foil), the maximum design R-value per 1 inch of insulation used shall be 7.2. Facings shall be non-asphaltic, glass fiber reinforced.

2.8 INSULATION RETAINERS

Insulation retainers shall be type, size, and design necessary to adequately hold the insulation and to provide a neat appearance. Metallic retaining members shall be nonferrous or have a nonferrous coating. Nonmetallic retaining members, including adhesives used in conjunction with mechanical retainers or at insulation seams, shall have a fire resistance classification not less than that permitted for the insulation.

2.9 SEALANT

Sealants shall be elastomeric type containing no oil or asphalt. Exposed sealant shall be clear and shall cure to a rubberlike consistency. Sealant placed in the roof panel standing seam ribs shall be provided in accordance with the manufacturer's recommendations.

2.10 GASKETS AND INSULATING COMPOUNDS

Gaskets and insulating compounds shall be nonabsorptive and suitable for insulating contact points of incompatible materials. Insulating compounds shall be nonrunning after drying.

2.11 VAPOR RETARDER (UNDERLAYMENT)

2.11.2 Vapor Retarders Separate from Insulation

Vapor retarder (underlayment) shall be rubberized asphalt sheet, self-adhering, with polyethylene strip sheet. Similar and equivalent to W. R. Grace Ice and Water Shield.

2.12 EPDM RUBBER BOOTS

Flashing devices around pipe penetrations shall be flexible, one-piece devices molded from weather-resistant EPDM rubber. Rubber boot material shall be as recommended by the manufacturer. The boots shall have base rings made of aluminum or corrosion resisting steel that conform to the contours of the roof panel to form a weather-tight seal.

PART 3 EXECUTION

3.1 INSTALLATION

Installation shall be in accordance with the manufacturer's erection instructions and drawings. Dissimilar materials which are not compatible when contacting each other shall be insulated by means of gaskets or insulating compounds. Molded closure strips shall be installed wherever roofing sheets terminate in open-end configurations, exclusive of flashings. The closure strip installation shall be weather-tight and sealed. Screws shall be installed with a clutching screw gun, to assure screws are not stripped. Field test shall be conducted on each gun prior to starting installation and periodically thereafter to assure it is adjusted properly to install particular type and size of screw as recommended by manufacturer's literature. Improper or mislocated drill holes shall be plugged with an oversize screw fastener and gasketed washer; however, sheets with an excess of such holes or with such holes in critical locations shall not be used. Exposed surfaces and edges shall be kept clean and free from sealant, metal cuttings, hazardous burrs, and other foreign material. Stained, discolored, or damaged sheets shall be removed from the site.

3.1.1 Field Forming of Panels for Unique Area

When roofing panels are formed from factory-color-finished steel coils at the project site, the same care and quality control measures that are taken in shop forming of roofing panels shall be observed. Rollformer shall be operated by the metal roofing manufacturer's representative. In cold weather conditions, preheating of the steel coils to be field formed shall be performed as necessary just prior to the rolling operations.

3.1.2 Subpurlins

Unless otherwise shown, subpurlins shall be anchored to the purlins or other structural framing members with bolts or screws. Attachment to the substrate (when provided) or to the panels is not permitted. The subpurlin spacing shall not exceed 30 inches on centers at the corner, edge and ridge zones, and 5 foot maximum on centers for the remainder of the roof. Corner, edge, and ridge zones are as defined in ASCE 7.

3.1.3 Roof Panel Installation

Roof panels shall be installed with the standing seams in the direction of the roof slope. The side seam connections for installed panels shall be completed at the end of each day's work. Method of applying joint sealant shall conform to the manufacturer's recommendation to achieve a complete weather-tight installation. End laps of panels shall be provided in accordance with the manufacturer's instructions. Closures, flashings, EPDM rubber boots, roof curbs, and related accessories shall be installed according to the manufacturer's drawings. Fasteners shall not puncture roofing sheets except as provided for in the manufacturer's instructions

for erection and installation. Expansion joints for the standing seam roof system shall be installed at locations indicated on the contract drawings and other locations indicated on the manufacturer's drawings.

3.1.4 Concealed Anchor Clips

Concealed anchor clips shall be fastened directly to the structural framing members. Attachment to the substrate (when provided) or to the metal deck is not permitted. The maximum distance, parallel to the seams, between clips shall be 30 inches on center at the corner, edge, and ridge zones, and 5 feet maximum on centers for the remainder of the roof.

3.2 INSULATION INSTALLATION

Insulation shall be continuous over entire roof surface. Where expansion joints, terminations, and other connections are made, the cavity shall be filled with batt insulation with vapor retarder providing equivalent R-value and perm rating as remaining insulation. Insulation shall be installed as indicated and in accordance with manufacturer's instructions.

3.2.1 Board Insulation

Rigid or semirigid board insulation shall be laid in close contact. Board shall be attached to the metal roof deck with bearing plates and fasteners, as recommended by the insulation manufacturer, so that the insulation joints are held tight against each other, and shall have a minimum of 1 fastener per 4 square feet. Layout and joint pattern of insulation and fasteners shall be indicated on the shop drawings. If more than one layer of insulation is required, joints in the second layer shall be offset from joints in the first layer.

3.3 VAPOR RETARDER INSTALLATION

3.3.1 Separate Vapor Retarder (Underlayment)

Underlayment shall be rolled out and adhered to the top of the rigid insulation and continue over the tops of the subpurlins. Make sure that membrane is continuous over entire roof.

3.4 CLEANING AND TOUCH-UP

Exposed SSSMR systems shall be cleaned at completion of installation. Debris that could cause discoloration and harm to the panels, flashings, closures and other accessories shall be removed. Grease and oil films, excess sealants, and handling marks shall be removed and the work shall be scrubbed clean. Exposed metal surfaces shall be free of dents, creases, waves, scratch marks, and solder or weld marks. Immediately upon detection, abraded or corroded spots on shop-painted surfaces shall be wire brushed and touched up with the same material used for the shop coat. Factory color finished surfaces shall be touched up with the manufacturer's recommended touch up paint.

CONTRACTOR'S FIVE (5) YEAR NO PENAL SUM WARRANTY
FOR
STRUCTURAL STANDING SEAM METAL ROOF (SSSMR) SYSTEM

FACILITY DESCRIPTION_____

BUILDING NUMBER:_____

CORPS OF ENGINEERS CONTRACT NUMBER:_____

CONTRACTOR

CONTRACTOR:_____

ADDRESS:_____

POINT OF CONTACT:_____

TELEPHONE NUMBER:_____

OWNER

OWNER:_____

ADDRESS:_____

POINT OF CONTACT:_____

TELEPHONE NUMBER:_____

CONSTRUCTION AGENT

CONSTRUCTION AGENT:_____

ADDRESS:_____

POINT OF CONTACT:_____

TELEPHONE NUMBER:_____

CONTRACTOR'S FIVE (5) YEAR NO PENAL SUM WARRANTY
FOR
STRUCTURAL STANDING SEAM METAL ROOF (SSSMR) SYSTEM
(continued)

THE SSSMR SYSTEM INSTALLED ON THE ABOVE NAMED BUILDING IS WARRANTED BY _____ FOR A PERIOD OF FIVE (5) YEARS AGAINST WORKMANSHIP AND MATERIAL DEFICIENCIES, WIND DAMAGE, STRUCTURAL FAILURE, AND LEAKAGE. THE SSSMR SYSTEM COVERED UNDER THIS WARRANTY SHALL INCLUDE, BUT SHALL NOT BE LIMITED TO, THE FOLLOWING: THE ENTIRE ROOFING SYSTEM, MANUFACTURER SUPPLIED FRAMING AND STRUCTURAL MEMBERS, METAL ROOF, FASCIA AND SOFFIT PANELS, FASTENERS, CONNECTORS, ROOF SECUREMENT COMPONENTS, AND ASSEMBLIES TESTED AND APPROVED IN ACCORDANCE WITH ASTM E 1592. IN ADDITION, THE SYSTEM PANEL FINISHES, SLIP SHEET, INSULATION, VAPOR RETARDER, ALL ACCESSORIES, COMPONENTS, AND TRIM AND ALL CONNECTIONS ARE INCLUDED. THIS INCLUDES ROOF PENETRATION ITEMS SUCH AS VENTS, CURBS, SKYLIGHTS; INTERIOR OR EXTERIOR GUTTERS AND DOWNSPOUTS; EAVES, RIDGE, HIP, VALLEY, RAKE, GABLE, WALL, OR OTHER ROOF SYSTEM FLASHINGS INSTALLED AND ANY OTHER COMPONENTS SPECIFIED WITHIN THIS CONTRACT TO PROVIDE A WEATHERTIGHT ROOF SYSTEM; AND ITEMS SPECIFIED IN OTHER SECTIONS OF THE SPECIFICATIONS THAT ARE PART OF THE SSSMR SYSTEM.

ALL MATERIAL DEFICIENCIES, WIND DAMAGE, STRUCTURAL FAILURE, AND LEAKAGE ASSOCIATED WITH THE SSSMR SYSTEM COVERED UNDER THIS WARRANTY SHALL BE REPAIRED AS APPROVED BY THE CONTRACTING OFFICER. THIS WARRANTY SHALL COVER THE ENTIRE COST OF REPAIR OR REPLACEMENT, INCLUDING ALL MATERIAL, LABOR, AND RELATED MARKUPS. THE ABOVE REFERENCED WARRANTY COMMENCED ON THE DATE OF FINAL ACCEPTANCE ON _____ AND WILL REMAIN IN EFFECT FOR STATED DURATION FROM THIS DATE.

SIGNED, DATED, AND NOTARIZED (BY COMPANY PRESIDENT)

_____

(Company President) (Date)

CONTRACTOR'S FIVE (5) YEAR NO PENAL SUM WARRANTY
FOR
STRUCTURAL STANDING SEAM METAL ROOF (SSSMR) SYSTEM
(continued)

THE CONTRACTOR SHALL SUPPLEMENT THIS WARRANTY WITH WRITTEN WARRANTIES FROM THE MANUFACTURER AND/OR INSTALLER OF THE SSSMR SYSTEM, WHICH SHALL BE SUBMITTED ALONG WITH THE CONTRACTOR'S WARRANTY. HOWEVER, THE CONTRACTOR WILL BE ULTIMATELY RESPONSIBLE FOR THIS WARRANTY AS OUTLINED IN THE SPECIFICATIONS AND AS INDICATED IN THIS WARRANTY EXAMPLE.

EXCLUSIONS FROM COVERAGE

1. NATURAL DISASTERS, ACTS OF GOD (LIGHTNING, FIRE, EXPLOSIONS, SUSTAINED WIND FORCES IN EXCESS OF THE DESIGN CRITERIA, EARTHQUAKES, AND HAIL).

2. ACTS OF NEGLIGENCE OR ABUSE OR MISUSE BY GOVERNMENT OR OTHER PERSONNEL, INCLUDING ACCIDENTS, VANDALISM, CIVIL DISOBEDIENCE, WAR, OR DAMAGE CAUSED BY FALLING OBJECTS.

3. DAMAGE BY STRUCTURAL FAILURE, SETTLEMENT, MOVEMENT, DISTORTION, WARPAGE, OR DISPLACEMENT OF THE BUILDING STRUCTURE OR ALTERATIONS MADE TO THE BUILDING.

4. CORROSION CAUSED BY EXPOSURE TO CORROSIVE CHEMICALS, ASH OR FUMES GENERATED OR RELEASED INSIDE OR OUTSIDE THE BUILDING FROM CHEMICAL PLANTS, FOUNDRIES, PLATING WORKS, KILNS, FERTILIZER FACTORIES, PAPER PLANTS, AND THE LIKE.

5. FAILURE OF ANY PART OF THE SSSMR SYSTEM DUE TO ACTIONS BY THE OWNER TO INHIBIT FREE DRAINAGE OF WATER FROM THE ROOF AND GUTTERS AND DOWNSPOUTS OR ALLOW PONDING WATER TO COLLECT ON THE ROOF SURFACE. CONTRACTOR'S DESIGN SHALL INSURE FREE DRAINAGE FROM THE ROOF AND NOT ALLOW PONDING WATER.

6. THIS WARRANTY APPLIES TO THE SSSMR SYSTEM. IT DOES NOT INCLUDE ANY CONSEQUENTIAL DAMAGE TO THE BUILDING INTERIOR OR CONTENTS WHICH IS COVERED BY THE WARRANTY OF CONSTRUCTION CLAUSE INCLUDED IN THIS CONTRACT.

7. THIS WARRANTY CANNOT BE TRANSFERRED TO ANOTHER OWNER WITHOUT WRITTEN CONSENT OF THE CONTRACTOR; AND THIS WARRANTY AND THE CONTRACT PROVISIONS WILL TAKE PRECEDENCE OVER ANY CONFLICTS WITH STATE STATUTES.

**

CONTRACTOR'S FIVE (5) YEAR NO PENAL SUM WARRANTY
FOR
STRUCTURAL STANDING SEAM METAL ROOF (SSSMR) SYSTEM
(continued)

**REPORTS OF LEAKS AND SSSMR SYSTEM DEFICIENCIES SHALL BE RESPONDED TO WITHIN 48 HOURS OF RECEIPT OF NOTICE, BY TELEPHONE OR IN WRITING, FROM EITHER THE OWNER OR CONTRACTING OFFICER. EMERGENCY REPAIRS TO PREVENT FURTHER ROOF LEAKS SHALL BE INITIATED IMMEDIATELY; A WRITTEN PLAN SHALL BE SUBMITTED FOR APPROVAL TO REPAIR OR REPLACE THIS SSSMR SYSTEM WITHIN SEVEN (7) CALENDAR DAYS. ACTUAL WORK FOR PERMANENT REPAIRS OR REPLACEMENT SHALL BE STARTED WITHIN 30 DAYS AFTER RECEIPT OF NOTICE, AND COMPLETED WITHIN A REASONABLE TIME FRAME. IF THE CONTRACTOR FAILS TO ADEQUATELY RESPOND TO THE WARRANTY PROVISIONS, AS STATED IN THE CONTRACT AND AS CONTAINED HEREIN, THE CONTRACTING OFFICER MAY HAVE THE SSSMR SYSTEM REPAIRED OR REPLACED BY OTHERS AND CHARGE THE COST TO THE CONTRACTOR.

IN THE EVENT THE CONTRACTOR DISPUTES THE EXISTENCE OF A WARRANTABLE DEFECT, THE CONTRACTOR MAY CHALLENGE THE OWNER'S DEMAND FOR REPAIRS AND/OR REPLACEMENT DIRECTED BY THE OWNER OR CONTRACTING OFFICER EITHER BY REQUESTING A CONTRACTING OFFICER'S DECISION UNDER THE CONTRACT DISPUTES ACT, OR BY REQUESTING THAT AN ARBITRATOR RESOLVE THE ISSUE. THE REQUEST FOR AN ARBITRATOR MUST BE MADE WITHIN 48 HOURS OF BEING NOTIFIED OF THE DISPUTED DEFECTS. UPON BEING INVOKED, THE PARTIES SHALL, WITHIN TEN (10) DAYS, JOINTLY REQUEST A LIST OF FIVE (5) ARBITRATORS FROM THE FEDERAL MEDIATION AND CONCILIATION SERVICE. THE PARTIES SHALL CONFER WITHIN TEN (10) DAYS AFTER RECEIPT OF THE LIST TO SEEK AGREEMENT ON AN ARBITRATOR. IF THE PARTIES CANNOT AGREE ON AN ARBITRATOR, THE CONTRACTING OFFICER AND THE PRESIDENT OF THE CONTRACTOR'S COMPANY WILL STRIKE ONE (1) NAME FROM THE LIST ALTERNATIVELY UNTIL ONE (1) NAME REMAINS. THE REMAINING PERSON SHALL BE THE DULY SELECTED ARBITRATOR. THE COSTS OF THE ARBITRATION, INCLUDING THE ARBITRATOR'S FEE AND EXPENSES, COURT REPORTER, COURTROOM OR SITE SELECTED, ETC., SHALL BE BORNE EQUALLY BETWEEN THE PARTIES. EITHER PARTY DESIRING A COPY OF THE TRANSCRIPT SHALL PAY FOR THE TRANSCRIPT. A HEARING WILL BE HELD AS SOON AS THE PARTIES CAN MUTUALLY AGREE. A WRITTEN ARBITRATOR'S DECISION WILL BE REQUESTED NOT LATER THAN 30 DAYS FOLLOWING THE HEARING. THE DECISION OF THE ARBITRATOR WILL NOT BE BINDING; HOWEVER, IT WILL BE ADMISSIBLE IN ANY SUBSEQUENT APPEAL UNDER THE CONTRACT DISPUTES ACT.

A FRAMED COPY OF THIS WARRANTY SHALL BE POSTED IN THE MECHANICAL ROOM OR OTHER APPROVED LOCATION DURING THE ENTIRE WARRANTY PERIOD.

-- End of Section --

SECTION TABLE OF CONTENTS

DIVISION 07 - THERMAL AND MOISTURE PROTECTION

SECTION 07600

FLASHING AND SHEET METAL

02/03

PART 1 GENERAL

1.1 REFERENCES
1.2 General Requirements
1.3 SUBMITTALS
1.4 DELIVERY, HANDLING, AND STORAGE

PART 2 PRODUCTS

2.1 MATERIALS
2.1.1 Exposed Sheet Metal Items
2.1.2 Drainage
2.1.3 Lead Sheet
2.1.4 Steel Sheet, Zinc-Coated (Galvanized)
2.1.4.1 Finish
2.1.5 Stainless Steel
2.1.6 Aluminum Alloy Sheet and Plate
2.1.6.1 Finish
2.1.7 Aluminum Alloy, Extruded Bars, Rods, Shapes, and Tubes
2.1.8 Solder
2.1.9 Polyvinyl Chloride Reglet
2.1.10 Bituminous Plastic Cement
2.1.11 Building Paper
2.1.12 Through-Wall Flashing
2.1.13 Fasteners

PART 3 EXECUTION

3.1 INSTALLATION
3.1.1 Workmanship
3.1.2 Nailing
3.1.3 Cleats
3.1.4 Bolts, Rivets, and Screws
3.1.5 Seams
3.1.5.1 Flat-lock Seams
3.1.5.2 Lap Seams
3.1.5.3 Loose-Lock Expansion Seams
3.1.5.4 Standing Seams
3.1.5.5 Flat Seams
3.1.6 Soldering
3.1.6.1 Edges
3.1.7 Welding and Mechanical Fastening
3.1.7.1 Mechanical Fastening of Aluminum
3.1.8 Protection from Contact with Dissimilar Materials
3.1.8.1 Aluminum
3.1.8.2 Metal Surfaces
3.1.8.3 Wood or Other Absorptive Materials
3.1.9 Expansion and Contraction

3.1.10 Counterflashing
3.1.11 Metal Reglets
3.1.11.1 Caulked Reglets
3.1.11.2 Friction Reglets
3.1.12 Polyvinyl Chloride Reglets
3.1.13 Metal Drip Edge
3.1.14 Gutters
3.1.15 Downspouts
3.1.15.1 Terminations
3.1.16 Sheet Metal Covering on Flat, Sloped, or Curved Surfaces
3.1.17 Flashing at Roof Penetrations and Equipment Supports
3.1.18 Single Pipe Vents
3.1.19 Copings
3.2 PAINTING
3.2.1 Aluminum Surfaces
3.3 CLEANING
3.4 REPAIRS TO FINISH

-- End of Section Table of Contents --

UFGS-07600 (February 2003)

SECTION 07600

FLASHING AND SHEET METAL
02/03

PART 1 GENERAL

1.1 REFERENCES

The publications listed below form a part of this specification to the extent referenced. The publications are referred to in the text by the basic designation only.

AMERICAN SOCIETY FOR TESTING AND MATERIALS (ASTM)

ASTM A 167	(1999) Stainless and Heat-Resisting Chromium-Nickel Steel Plate, Sheet, and Strip
ASTM A 653/A 653M	(2001, Rev A) Steel Sheet, Zinc-Coated (Galvanized) or Zinc-Iron Alloy-Coated (Galvannealed) by the Hot-Dip Process
ASTM B 32	(2000) Solder Metal
ASTM B 209	(2001) Aluminum and Aluminum Alloy Sheet and Plate
ASTM B 221	(2000) Aluminum and Aluminum-Alloy Extruded Bars, Rods, Wire, Profiles, and Tubes
ASTM D 226	(1997, Rev A) Asphalt-Saturated Organic Felt Used in Roofing and Waterproofing
ASTM D 1784	(1999, Rev A) Rigid Poly(Vinyl Chloride) (PVC) Compounds and Chlorinated Poly(Vinyl Chloride) (CPVC) Compounds
ASTM D 4586	(2000) Asphalt Roof Cement, Asbestos-Free

SHEET METAL & AIR CONDITIONING CONTRACTORS' NATIONAL ASSOCIATION (SMACNA)

SMACNA Arch. Manual	(1993) Architectural Sheet Metal Manual

1.2 General Requirements

Sheet metalwork shall be accomplished to form weathertight construction without waves, warps, buckles, fastening stresses or distortion, and shall allow for expansion and contraction. Cutting, fitting, drilling, and other operations in connection with sheet metal required to accommodate the work of other trades shall be performed by sheet metal mechanics. Installation of sheet metal items used in conjunction with roofing shall be coordinated with roofing work to permit continuous roofing operations. Sheet metalwork pertaining to heating, ventilating, and air conditioning is specified in

Section 15895 AIR SUPPLY, DISTRIBUTION, VENTILATION, AND EXHAUST SYSTEM.

1.3 SUBMITTALS

Government approval is required for submittals with a "G" designation; submittals not having a "G" designation are for information only or as otherwise designated. When used, a designation following the "G" designation identifies the office that will review the submittal for the Government. The following shall be submitted in accordance with Section 01330 SUBMITTAL PROCEDURES:

SD-02 Shop Drawings

Covering on flat, sloped, or curved surfaces

Gutters

Downspouts

Counterflashing

Flashing at roof penetrations

Reglets

Copings

Indicate thicknesses, dimensions, fastenings and anchoring methods, expansion joints, and other provisions necessary for thermal expansion and contraction. Scaled manufacturer's catalog data may be submitted for factory fabricated items.

SD-11 Closeout Submittals

Quality Control Plan

Submit for sheet metal work in accordance with paragraph entitled "Field Quality Control."

1.4 DELIVERY, HANDLING, AND STORAGE

Package and protect materials during shipment. Uncrate and inspect materials for damage, dampness, and wet-storage stains upon delivery to the job site. Remove from the site and replace damaged materials that cannot be restored to like-new condition. Handle sheet metal items to avoid damage to surfaces, edges, and ends. Store materials in dry, weather-tight, ventilated areas until immediately before installation.

PART 2 PRODUCTS

2.1 MATERIALS

Furnish sheet metal items in 8 to 10 foot lengths. Single pieces less than 8 feet long may be used to connect to factory-fabricated inside and outside corners, and at ends of runs. Factory fabricate corner pieces with minimum 12 inch legs. Provide accessories and other items essential to complete the sheet metal installation. These accessories shall be made of the same materials as the items to which they are applied. Fabricate sheet metal

items of the materials specified below and to the gage, thickness, or weight shown in Table I at the end of this section. Sheet metal items shall have mill finish unless specified otherwise. Where more than one material is listed for a particular item in Table I, each is acceptable and may be used except as follows:

2.1.1 Exposed Sheet Metal Items

Shall be of the same material. The following items shall be considered as exposed sheet metal: gutters, including hangers; downspouts; gravel stops and fascias; cap, valley, steeped, base, and eave flashings and related accessories.

2.1.2 Drainage

Do not use copper for an exposed item if drainage from that item will pass over exposed masonry, stonework or other metal surfaces. In addition to the metals listed in Table I, lead-coated copper may be used for such items.

2.1.3 Lead Sheet

Minimum weight 4 pounds per square foot.

2.1.4 Steel Sheet, Zinc-Coated (Galvanized)

ASTM A 653/A 653M.

2.1.4.1 Finish

Exposed exterior items of zinc-coated steel sheet shall have a baked-on, factory-applied color coating of polyvinylidene fluoride or other equivalent fluorocarbon coating applied after metal substrates have been cleaned and pretreated. Finish coating dry-film thickness shall be 0.8 to 1.3 mils and color shall be as indicated on the drawings.

2.1.5 Stainless Steel

ASTM A 167, Type 302 or 304, 2D Finish, fully annealed, dead-soft temper.

2.1.6 Aluminum Alloy Sheet and Plate

ASTM B 209, form alloy, and temper appropriate for use.

2.1.6.1 Finish

Exposed exterior sheet metal items of aluminum shall have a baked-on, factory-applied color coating of polyvinylidene fluoride (PVF2) or other equivalent fluorocarbon coating applied after metal substrates have been cleaned and pretreated. Finish coating dry-film thickness shall be 0.8 to 1.3 mils, and color shall be as indicated on the drawings.

2.1.7 Aluminum Alloy, Extruded Bars, Rods, Shapes, and Tubes

ASTM B 221.

2.1.8 Solder

ASTM B 32, 95-5 tin-antimony.

2.1.9 Polyvinyl Chloride Reglet

ASTM D 1784, Type II, Grade 1, Class 14333-D, 0.075 inch minimum thickness.

2.1.10 Bituminous Plastic Cement

ASTM D 4586, Type I.

2.1.11 Building Paper

ASTM D 226 Type I.

2.1.12 Through-Wall Flashing

Through-wall flashing for masonry is specified in Section 04200 MASONRY

2.1.13 Fasteners

Use the same metal or a metal compatible with the item fastened. Use stainless steel fasteners to fasten dissimilar materials.

PART 3 EXECUTION

3.1 INSTALLATION

3.1.1 Workmanship

Make lines, arrises, and angles sharp and true. Free exposed surfaces from visible wave, warp, and buckle, and tool marks. Fold back exposed edges neatly to form a 1/2 inch hem on the concealed side. Make sheet metal exposed to the weather watertight with provisions for expansion and contraction.

Make surfaces to receive sheet metal plumb and true, clean, even, smooth, dry, and free of defects and projections which might affect the application. For installation of items not shown in detail or not covered by specifications conform to the applicable requirements of SMACNA Arch. Manual, Architectural Sheet Metal Manual. Provide sheet metal flashing in the angles formed where roof decks abut walls, curbs, ventilators, pipes, or other vertical surfaces and wherever indicated and necessary to make the work watertight. Join sheet metal items together as shown in Table II.

3.1.2 Nailing

Confine nailing of sheet metal generally to sheet metal having a maximum width of 18 inches. Confine nailing of flashing to one edge only. Space nails evenly not over 3 inches on centers and approximately 1/2 inch from edge unless otherwise specified or indicated. Face nailing will not be permitted. Where sheet metal is applied to other than wood surfaces, include in shop drawings, the locations for sleepers and nailing strips required to secure the work. Sleepers and nailing strips are specified in Section 06100A, "Rough Carpentry."

3.1.3 Cleats

Provide cleats for sheet metal 18 inches and over in width. Space cleats

evenly not over 12 inches on centers unless otherwise specified or indicated. Unless otherwise specified, cleats shall be not less than 2 inches wide by 3 inches long and of the same material and thickness as the sheet metal being installed. Secure one end of the cleat with two nails and the cleat folded back over the nailheads. Lock the other end into the seam. Where the fastening is to be made to concrete or masonry, screws shall be used and shall be driven in expansion shields set in concrete or masonry. Pretin cleats for soldered seams.

3.1.4 Bolts, Rivets, and Screws

Install bolts, rivets, and screws where indicated or required. Provide compatible washers where required to protect surface of sheet metal and to provide a watertight connection. Joints in aluminum sheets 0.040 inch or less in thickness shall be mechanically made.

3.1.5 Seams

Straight and uniform in width and height with no solder showing on the face.

3.1.5.1 Flat-lock Seams

Finish not less than 3/4 inch wide.

3.1.5.2 Lap Seams

Finish soldered seams not less than one inch wide. Overlap seams not soldered, not less than 3 inches.

3.1.5.3 Loose-Lock Expansion Seams

Not less than 3 inches wide; provide minimum one inch movement within the joint. Completely fill the joints with the specified sealant, applied at not less than 1/8 inch thick bed. Sealants are specified in Section 07900A, "Joint Sealing".

3.1.5.4 Standing Seams

Not less than one inch high, double locked without solder.

3.1.5.5 Flat Seams

Make seams in the direction of the flow.

3.1.6 Soldering

Where soldering is specified, it shall apply to copper, terne-coated stainless steel, zinc-coated steel, and stainless steel items. Edges of sheet metal shall be pretinned before soldering is begun. Seal the joints in aluminum sheets of 0.040 inch or less in thickness with specified sealants. Do not solder aluminum.

3.1.6.1 Edges

Scrape or wire-brush the edges of lead-coated material to be soldered to produce a bright surface. Flux brush the seams in before soldering. Treat with soldering acid flux the edges of stainless steel to be pretinned. Seal the joints in aluminum sheets of 0.040 inch or less in thickness with specified sealants. Do not solder aluminum.

3.1.7 Welding and Mechanical Fastening

Use welding for aluminum of thickness greater than 0.040 inch. Aluminum 0.040 inch or less in thickness shall be butted and the space backed with formed flashing plate; or lock joined, mechanically fastened, and filled with sealant as recommended by the aluminum manufacturer.

3.1.7.1 Mechanical Fastening of Aluminum

Use No. 12, aluminum alloy, sheet metal screws or other suitable aluminum alloy or stainless steel fasteners. Drive fasteners in holes made with a No. 26 drill in securing side laps, end laps, and flashings. Space fasteners 12 inches maximum on centers. Where end lap fasteners are required to improve closure, locate the end lap fasteners not more than 2 inches from the end of the overlapping sheet.

3.1.8 Protection from Contact with Dissimilar Materials

3.1.8.1 Aluminum

Aluminum surfaces shall not directly contact other metals except stainless steel, zinc, or zinc coating. Where aluminum contacts another metal, paint the dissimilar metal with a primer followed by two coats of aluminum paint. Where drainage from a dissimilar metal passes over aluminum, paint the dissimilar metal with a non-lead pigmented paint.

3.1.8.2 Metal Surfaces

Paint surfaces in contact with mortar, concrete, or other masonry materials with alkali-resistant coatings such as heavy-bodied bituminous paint.

3.1.8.3 Wood or Other Absorptive Materials

Paint surfaces that may become repeatedly wet and in contact with metal with two coats of aluminum paint or a coat of heavy-bodied bituminous paint.

3.1.9 Expansion and Contraction

Provide expansion and contraction joints at not more than 32 foot intervals for aluminum and at not more than 40 foot intervals for other metals. Where the distance between the last expansion joint and the end of the continuous run is more than half the required interval, an additional joint shall be provided. Space joints evenly. Join extruded aluminum gravel stops and fascias by expansion and contraction joints spaced not more than 12 feet apart.

3.1.10 Counterflashing

Except where indicated or specified otherwise, insert counterflashing in reglets located from 9 to 10 inches above roof decks, extend down vertical surfaces over upturned vertical leg of base flashings not less than 3 inches. Fold the exposed edges of counterflashings 1/2 inch. Where stepped counterflashings are required, they may be installed in short lengths a minimum 8 inch by 10 inch or may be of the preformed one-piece type. Provide end laps in counterflashings not less than 3 inches and make it weathertight with plastic cement. Do not make lengths of metal counterflashings exceed 10 feet. Form the flashings to the required shapes before installation. Factory-form the corners not less than 12 inches

from the angle. Secure the flashings in the reglets with lead wedges and space not more than 18 inches apart; on short runs, place wedges closer together. Fill caulked-type reglets or raked joints which receive counterflashing with caulking compound. Caulking is covered in Section 07900A, "Joint Sealing". Turn up the concealed edge of counterflashings built into masonry or concrete walls not less than 1/4 inch and extend not less than 2 inches into the walls. Install counterflashing to provide a spring action against base flashing.

3.1.11 Metal Reglets

Caulked type or friction type reglets shall be factory fabricated with a minimum opening of 1/4 inch and a depth of 1 1/4 inches, as approved.

3.1.11.1 Caulked Reglets

Provide with rounded edges and metal strap brackets or other anchors for securing to the concrete forms. Provide reglets with a core to protect them from injury during the installation. Provide built-up mitered corner pieces for internal and external angles. Wedge the flashing in the reglets with lead wedges every 18 inches, caulked full and solid with an approved compound.

3.1.11.2 Friction Reglets

Provide with flashing receiving slots not less than 5/8 inch deep, one inch jointing tongues, and upper and lower anchoring flanges installed at 24 inches maximum snaplock receiver. Insert the flashing the full depth of the slot and lock by indentations made with a dull-pointed tool, wedges, and filled with a sealant. For friction reglets, install flashing snaplock receivers at 24 inches o.c. maximum. When the flashing has been inserted the full depth, caulk the slot and lock with wedges and fill with sealant.

3.1.12 Polyvinyl Chloride Reglets

Rigid polyvinyl chloride reglets ASTM D 1784, Type II, Grade 1, Class 14333-D, 0.075 inches minimum thickness may be provided in lieu of metal reglets for temporary construction.

3.1.13 Metal Drip Edge

Provide a metal drip, designed to allow water run-off to drip free of underlying construction, at eaves and rakes prior to the application of roofing shingles. Apply directly on the wood deck at the eaves and over the underlay along the rakes. Extend back from the edge of the deck not more than 3 inches and secure with compatible nails spaced not more than 10 inches on center along upper edge.

3.1.14 Gutters

The hung type of shape indicated and supported on underside by brackets that permit free thermal movement of the gutter. Provide gutters in sizes indicated complete with mitered corners, end caps, outlets, brackets, and other accessories necessary for installation. Bead with hemmed edge or reinforce the outer edge of gutter with a stiffening bar not less than 3/4 by 3/16 inch of material compatible with gutter. Fabricate gutters in sections not less than 8 feet. Lap the sections a minimum of one inch in the direction of flow or provide with concealed splice plate 6 inches minimum. Join the gutters, other than aluminum, by riveted and soldered joints. Aluminum gutters shall be joined with riveted sealed joints.

Provide expansion-type slip joints midway between outlets. Install gutters below slope line of the roof so that snow and ice can slide clear. Support gutters on as indicated. Adjust gutters to slope uniformly to outlets, with high points occurring midway between outlets. Fabricate hangers and fastenings from metals compatible with the gutters.

3.1.15 Downspouts

Supports for downspouts shall be spaced according to the manufacturer's recommendation for the masonry or steel substrate. Types, shapes and sizes are indicated. Provide complete including elbows and offsets. Provide downspouts in approximately 10 foot lengths. Provide end joints to telescope not less than 1/2 inch and lock longitudinal joints. Provide gutter outlets with wire ball strainers for each outlet. Provide strainers to fit tightly into outlets and be of the same material used for gutters. Keep downspouts not less than one inch away from walls. Fasten to the walls at top, bottom, and at an intermediate point not to exceed 5 feet on centers with leader straps or concealed rack-and-pin type fasteners. Form straps and fasteners of metal compatible with the downspouts.

3.1.15.1 Terminations

Neatly fit into the drainage connection the downspouts terminating in drainage lines and fill the joints with a portland cement mortar cap sloped away from the downspout.

3.1.16 Sheet Metal Covering on Flat, Sloped, or Curved Surfaces

Except as specified or indicated otherwise, cover and flash all minor flat, sloped, or curved surfaces such as crickets, bulkheads, dormers and small decks with metal sheets of the material used for flashing; maximum size of sheets, 16 by 18 inches. Fasten sheets to sheathing with metal cleats. Lock seams and solder. Lock aluminum seams and fill with sealer as recommended by aluminum manufacturer. Provide an underlayment of building paper for all sheet metal covering.

3.1.17 Flashing at Roof Penetrations and Equipment Supports

Provide metal flashing for all pipes, ducts, and conduits projecting through the roof surface and for equipment supports, guy wire anchors, and similar items supported by or attached to the roof deck.

3.1.18 Single Pipe Vents

See Table I, footnote (d). Set flange of sleeve in bituminous plastic cement and nail 3 inches on centers. Bend the top of sleeve over and extend down into the vent pipe a minimum of 2 inches. For long runs or long rises above the deck, where it is impractical to cover the vent pipe with lead, use a two-piece formed metal housing. Set metal housing with a metal sleeve having a 4 inch roof flange in bituminous plastic cement and nailed 3 inches on centers. Extend sleeve a minimum of 8 inches above the roof deck and lapped a minimum of 3 inches by a metal hood secured to the vent pipe by a draw band. Seal the area of hood in contact with vent pipe with an approved sealant. Sealants are covered under Section 07900A, "Joint Sealing".

3.1.19 Copings

Provide coping using copper sheets 8 or 10 feet long joined by a 3/4 inch

locked and soldered seam. Terminate outer edges in edge strips. Install with sealed standing seam joints as indicated.

3.2 PAINTING

Field-paint sheet metal for separation of dissimilar materials. Finish painting is specified in Section 09900, "Paints and Coatings."

3.2.1 Aluminum Surfaces

Shall be solvent cleaned and given one coat of zinc-molybdate primer and one coat of aluminum paint as specified in Section 09900, "Painting, General."

3.3 CLEANING

Clean exposed sheet metal work at completion of installation. Remove grease and oil films, handling marks, contamination from steel wool, fittings and drilling debris, and scrub-clean. Free the exposed metal surfaces of dents, creases, waves, scratch marks, and solder or weld marks.

3.4 REPAIRS TO FINISH

Scratches, abrasions, and minor surface defects of finish may be repaired in accordance with the manufacturer's printed instructions and as approved. Repair damaged surfaces caused by scratches, blemishes, and variations of color and surface texture. Replace items which cannot be repaired.

-- End of Section --

SECTION TABLE OF CONTENTS

DIVISION 07 - THERMAL AND MOISTURE PROTECTION

SECTION 07840

FIRESTOPPING

06/03

PART 1 GENERAL

1.1 REFERENCES
1.2 SUBMITTALS
1.3 GENERAL REQUIREMENTS
1.4 DELIVERY AND STORAGE
1.5 INSTALLER QUALIFICATIONS
1.6 COORDINATION

PART 2 PRODUCTS

2.1 FIRESTOPPING MATERIALS
2.1.1 Fire Hazard Classification
2.1.2 Toxicity
2.1.3 Fire Resistance Rating
2.1.3.1 Through-Penetrations
2.1.3.2 Construction Joints and Gaps

PART 3 EXECUTION

3.1 PREPARATION
3.2 INSTALLATION
3.2.1 Insulated Pipes and Ducts
3.2.2 Fire Dampers
3.2.3 Data and Communication Cabling
3.3 INSPECTION

-- End of Section Table of Contents --

UFGS-07840 (June 2003)

SECTION 07840

FIRESTOPPING
06/03

PART 1 GENERAL

1.1 REFERENCES

The publications listed below form a part of this specification to the extent referenced. The publications are referred to within the text by basic designation only.

ASTM INTERNATIONAL (ASTM)

ASTM E 84	(2001) Surface Burning Characteristics of Building Materials
ASTM E 119	(2000a) Fire Tests of Building Construction and Materials
ASTM E 814	(2002) Fire Tests of Through-Penetration Fire Stops
ASTM E 1399	(1997; R 2000) Cyclic Movement and Measuring the Minimum and Maximum Joint Widths of Architectural Joint Systems
ASTM E 1966	(2001) Fire-Resistive Joint Systems

FM GLOBAL (FM)

FM P7825a	(2003) Approval Guide Fire Protection
FM Standard 4991	(2003) FM Contractor Approval Standard

UNDERWRITERS LABORATORIES (UL)

UL 723	(1996; Rev thru Sep 2001) Test for Surface Burning Characteristics of Building Materials
UL 1479	(1994; Rev thru Aug 2000) Fire Tests of Through-Penetration Firestops
UL 2079	(1998) Tests for Fire Resistance of Building Joint Systems
UL Fire Resist Dir	(2001) Fire Resistance Directory (2 Vol.)

1.2 SUBMITTALS

Government approval is required for submittals with a "G" designation; submittals not having a "G" designation are for information only or as otherwise designated. When used, a designation following the "G"

designation identifies the office that will review the submittal for the Government. The following shall be submitted in accordance with Section 01330 SUBMITTAL PROCEDURES:

SD-02 Shop Drawings

Firestopping Materials.

Detail drawings including manufacturer's descriptive data, typical details conforming to UL Fire Resist Dir or other details certified by another nationally recognized testing laboratory, installation instructions or UL listing details for a firestopping assembly in lieu of fire-test data or report. For those firestop applications for which no UL tested system is available through a manufacturer, a manufacturer's engineering judgement, derived from similar UL system designs or other tests, shall be submitted for review and approval prior to installation. Submittal shall indicate the firestopping material to be provided for each type of application. When more than a total of 5 penetrations and/or construction joints are to receive firestopping, provide drawings that indicate location, "F" and "T" ratings, and type of application.

SD-07 Certificates

Firestopping Materials.

Certificates attesting that firestopping material complies with the specified requirements. In lieu of certificates, drawings showing UL classified materials as part of a tested assembly may be provided. Drawings showing evidence of testing by an alternate nationally recognized independent laboratory may be substituted.

Installer Qualifications.

Documentation of training and experience.

Inspection.

Manufacturer's representative certification stating that firestopping work has been inspected and found to be applied according to the manufacturer's recommendations and the specified requirements.

1.3 GENERAL REQUIREMENTS

Firestopping shall consist of furnishing and installing tested and listed firestop systems, combination of materials, or devices to form an effective barrier against the spread of flame, smoke and gases, and maintain the integrity of fire resistance rated walls, partitions, floors, and ceiling-floor assemblies, including through-penetrations and construction joints and gaps. Through-penetrations include the annular space around pipes, tubes, conduit, wires, cables and vents. Construction joints include those used to accommodate expansion, contraction, wind, or seismic movement; firestopping material shall not interfere with the required movement of the joint. Gaps requiring firestopping include gaps between the curtain wall and the floor slab and between the top of the fire-rated walls and the roof or floor deck above.

1.4 DELIVERY AND STORAGE

Materials shall be delivered in the original unopened packages or containers showing name of the manufacturer and the brand name. Materials shall be stored off the ground and shall be protected from damage and exposure to elements. Damaged or deteriorated materials shall be removed from the site.

1.5 INSTALLER QUALIFICATIONS

The Contractor shall engage an experienced Installer who is:

a. FM Research approved in accordance with FM Standard 4991, or

b. Certified, licensed, or otherwise qualified by the firestopping manufacturer as having the necessary staff, training, and a minimum of 3 years experience in the installation of manufacturer's products per specified requirements. A manufacturer's willingness to sell its firestopping products to the Contractor or to an installer engaged by the Contractor does not in itself confer qualification on the buyer. The Installer shall have been trained by a direct representative of the manufacturer (not distributor or agent) in the proper selection and installation procedures.

1.6 COORDINATION

The specified work shall be coordinated with other trades. Firestopping materials, at penetrations of pipes and ducts, shall be applied prior to insulating, unless insulation meets requirements specified for firestopping. Firestopping materials at building joints and construction gaps shall be applied prior to completion of enclosing walls or assemblies. Cast-in-place firestop devices shall be located and installed in place before concrete placement. Pipe, conduit or cable bundles shall be installed through cast-in-place device after concrete placement but before area is concealed or made inaccessible.

PART 2 PRODUCTS

2.1 FIRESTOPPING MATERIALS

Firestopping materials shall consist of commercially manufactured, asbestos-free, containing no water soluble intumescent imgredients, noncombustible products FM P7825a approved for use with applicable construction and penetrating items, complying with the following minimum requirements:

2.1.1 Fire Hazard Classification

Material shall have a flame spread of 25 or less, and a smoke developed rating of 50 or less, when tested in accordance with ASTM E 84 or UL 723. Material shall be an approved firestopping material as listed in UL Fire Resist Dir or by a nationally recognized testing laboratory.

2.1.2 Toxicity

Material shall be nontoxic to humans at all stages of application or during fire conditions.

2.1.3 Fire Resistance Rating

Firestop systems shall be UL Fire Resist Dir listed or FM P7825a approved with "F" rating at least equal to fire-rating of fire wall or floor in which penetraded openings are to be protected, except that "F" rating may be 3 hours in through-penetrations of 4 hour fire rated wall or floor. Firestop systems shall also have "T" rating where required.

2.1.3.1 Through-Penetrations

Firestopping materials for through-penetrations, as described in paragraph GENERAL REQUIREMENTS, shall provide "F" and "T" fire resistance ratings in accordance with ASTM E 814 or UL 1479. Fire resistance ratings shall be as follows:

a. Penetrations of Fire Resistance Rated Walls and Partitions: F Rating = Rating of wall or partition being penetrated.

b. Penetrations of Fire Resistance Rated Floors, Floor-Ceiling Assemblies and the ceiling membrane of Roof-Ceiling Assemblies: F Rating = 1 hour, T Rating = 1 hour.

2.1.3.2 Construction Joints and Gaps

Fire resistance ratings of construction joints, as described in paragraph GENERAL REQUIREMENTS, and gaps such as those between floor slabs or roof decks and curtain walls shall be the same as the construction in which they occur. Construction joints and gaps shall be provided with firestopping materials and systems that have been tested per ASTM E 119, ASTM E 1966 or UL 2079 to meet the required fire resistance rating. Systems installed at construction joints shall meet the cycling requirements of ASTM E 1399 or UL 2079.

PART 3 EXECUTION

3.1 PREPARATION

Areas to receive firestopping shall be free of dirt, grease, oil, or loose materials which may affect the fitting or fire resistance of the firestopping system. For cast-in-place firestop devices, formwork or metal deck to receive device prior to concrete placement shall be sound and capable of supporting device. Surfaces shall be prepared as recommended by the manufacturer.

3.2 INSTALLATION

Firestopping material shall completely fill void spaces regardless of geometric configuration, subject to tolerance established by the manufacturer. Firestopping systems for filling floor voids 4 inches or more in any direction shall be capable of supporting the same load as the floor is designed to support or shall be protected by a permanent barrier to prevent loading or traffic in the firestopped area. Firestopping shall be installed in accordance with manufacturer's written instructions. Tested and listed firestop systems shall be provided in the following locations, except in floor slabs on grade:

a. Penetrations of duct, conduit, tubing, cable and pipe through floors and through fire-resistance rated walls, partitions, and ceiling-floor assemblies.

b. Penetrations of vertical shafts such as pipe chases, elevator shafts, and utility chutes.

c. Gaps at the intersection of floor slabs and curtain walls, including inside of hollow curtain walls at the floor slab.

d. Gaps at perimeter of fire-resistance rated walls and partitions, such as between the top of the walls and the bottom of roof decks.

e. Construction joints in floors and fire rated walls and partitions.

f. Other locations where required to maintain fire resistance rating of the construction.

3.2.1 Insulated Pipes and Ducts

Thermal insulation shall be cut and removed where pipes or ducts pass through firestopping, unless insulation meets requirements specified for firestopping. Thermal insulation shall be replaced with a material having equal thermal insulating and firestopping characteristics.

3.2.2 Fire Dampers

Fire dampers shall be installed and firestopped in accordance with Section 15895 AIR SUPPLY, DISTRIBUTION, VENTILATION, AND EXHAUST SYSTEM.

3.2.3 Data and Communication Cabling

Cabling for data and communication applications shall be sealed with re-enterable firestopping products that do not cure over time. Firestopping shall be modular devices, containing built-in self-sealing intumescent inserts. Firestopping devices shall allow for cable moves, adds or changes without the need to remove or replace any firestop materials.

3.3 INSPECTION

For all projects, the remainder of the firestopped areas shall not be covered or enclosed until inspection is complete and approved by the manufacturer's technical representative. The manufacturer's representative shall inspect the applications initially to ensure adequate preparations (clean surfaces suitable for application, etc.) and periodically during the work to assure that the completed work has been accomplished according to the manufacturer's written instructions and the specified requirements. The Contractor shall submit written reports indicating locations of and types of penetrations and types of firestopping used at each location; type shall be recorded by UL listed printed numbers.

-- End of Section --

SECTION TABLE OF CONTENTS

DIVISION 07 - THERMAL AND MOISTURE PROTECTION

SECTION 07900A

JOINT SEALING

06/97

PART 1 GENERAL

1.1 REFERENCES
1.2 SUBMITTALS
1.3 ENVIRONMENTAL REQUIREMENTS
1.4 DELIVERY AND STORAGE

PART 2 PRODUCTS

2.1 BACKING
2.1.1 Rubber
2.1.2 Synthetic Rubber
2.1.3 Neoprene
2.2 BOND-BREAKER
2.3 PRIMER
2.4 CAULKING
2.5 SEALANT
2.5.1 LATEX
2.5.2 ELASTOMERIC
2.5.3 BUTYL
2.6 SOLVENTS AND CLEANING AGENTS

PART 3 EXECUTION

3.1 GENERAL
3.1.1 Surface Preparation
3.1.2 Concrete and Masonry Surfaces
3.1.3 Steel Surfaces
3.1.4 Aluminum Surfaces
3.1.5 Wood Surfaces
3.2 APPLICATION
3.2.1 Masking Tape
3.2.2 Backing
3.2.3 Bond-Breaker
3.2.4 Primer
3.2.5 Sealant
3.3 CLEANING

-- End of Section Table of Contents --

SECTION 07900A

JOINT SEALING
06/97

PART 1 GENERAL

1.1 REFERENCES

The publications listed below form a part of this specification to the extent referenced. The publications are referred to in the text by basic designation only.

AMERICAN SOCIETY FOR TESTING AND MATERIALS (ASTM)

ASTM C 509	(1994) Elastomeric Cellular Preformed Gasket and Sealing Material
ASTM C 570	(1995) Oil- and Resin-Base Caulking Compound for Building Construction
ASTM C 834	(1995) Latex Sealants
ASTM C 920	(1998) Elastomeric Joint Sealants
ASTM C 1085	(1991) Butyl Rubber-Based Solvent-Release Sealants
ASTM D 1056	(1998) Flexible Cellular Materials - Sponge or Expanded Rubber

1.2 SUBMITTALS

Government approval is required for submittals with a "G" designation; submittals not having a "G" designation are for information only. When used, a designation following the "G" designation identifies the office that will review the submittal for the Government. The following shall be submitted in accordance with Section 01330 SUBMITTAL PROCEDURES:

SD-03 Product Data

Backing.

Bond-Breaker.

Sealant.

Manufacturer's descriptive data including storage requirements, shelf life, curing time, instructions for mixing and application, and primer data (if required). A copy of the Material Safety Data Sheet shall be provided for each solvent, primer or sealant material.

SDD Data: Data and calculations of VOC content for inclusion in

<LED Compliance Notebook reguired under Section 01335 SUSTAINABLE DESIGN AND DEVELOPMENT.

SD-07 Certificates

Sealant.

Certificates of compliance stating that the materials conform to the specified requirements.

1.3 ENVIRONMENTAL REQUIREMENTS

The ambient temperature shall be within the limits of 40 to 90 degrees F when the sealants are applied.

1.4 DELIVERY AND STORAGE

Materials shall be delivered to the job in the manufacturer's original unopened containers. The container label or accompanying data sheet shall include the following information as applicable: manufacturer, name of material, formula or specification number, lot number, color, date of manufacture, mixing instructions, shelf life, and curing time at the standard conditions for laboratory tests. Materials shall be handled and stored to prevent inclusion of foreign materials. Materials shall be stored at temperatures between40 and 90 degrees F unless otherwise specified by the manufacturer.

PART 2 PRODUCTS

2.1 BACKING

Backing shall be 25 to 33 percent oversize for closed cell and 40 to 50 percent oversize for open cell material, unless otherwise indicated.

2.1.1 Rubber

Cellular rubber sponge backing shall be ASTM D 1056, Type 2, closed cell, Class B, round cross section.

2.1.2 Synthetic Rubber

Synthetic rubber backing shall be ASTM C 509, Option I, Type I preformed rods or tubes.

2.1.3 Neoprene

Neoprene backing shall be ASTM D 1056, closed cell expanded neoprene cord Type 2, Class C, Grade 2C2.

2.2 BOND-BREAKER

Bond-breaker shall be as recommended by the sealant manufacturer to prevent adhesion of the sealant to backing or to bottom of the joint.

2.3 PRIMER

Primer shall be non-staining type as recommended by sealant manufacturer for the application.

2.4 CAULKING

Oil- and resin-based caulking shall be ASTM C 570.

2.5 SEALANT

2.5.1 LATEX

Latex Sealant shall be ASTM C 834.

2.5.2 ELASTOMERIC

Elastomeric sealants shall conform to ASTM C 920 and the following:

a. Polysulfide Sealant: Type S, Grade NS, Class 25, Use NT, M A O.

b. Polyurethane sealant: Grade NS, Class 25, Use T NT M A O.

c. Silicone sealant: Type S, Grade NS, Class 12.5, Use NT, M G A O.

d. In accordance with Section 01335 SUSTAINABLE DESIGN AND DEVELOPMENT, to the greatest extent possible, whenever a choice shall be made between products or manufacturers, the products with the lowest level of emission of Volatile Organic Compounds (VOC's) shall be used.

2.5.3 BUTYL

Butyl sealant shall be ASTM C 1085.

2.6 SOLVENTS AND CLEANING AGENTS

Solvents, cleaning agents, and accessory materials shall be provided as recommended by the manufacturer.

PART 3 EXECUTION

3.1 GENERAL

3.1.1 Surface Preparation

The surfaces of joints to receive sealant or caulk shall be free of all frost, condensation and moisture. Oil, grease, dirt, chalk, particles of mortar, dust, loose rust, loose mill scale, and other foreign substances shall be removed from surfaces of joints to be in contact with the sealant. Oil and grease shall be removed with solvent and surfaces shall be wiped dry with clean cloths. For surface types not listed below, the sealant manufacturer shall be contacted for specific recommendations.

3.1.2 Concrete and Masonry Surfaces

Where surfaces have been treated with curing compounds, oil, or other such materials, the materials shall be removed by sandblasting or wire brushing. Laitance, efflorescence and loose mortar shall be removed from the joint cavity.

3.1.3 Steel Surfaces

Steel surfaces to be in contact with sealant shall be sandblasted or, if

sandblasting would not be practical or would damage adjacent finish work, the metal shall be scraped and wire brushed to remove loose mill scale. Protective coatings on steel surfaces shall be removed by sandblasting or by a solvent that leaves no residue.

3.1.4 Aluminum Surfaces

Aluminum surfaces to be in contact with sealants shall be cleaned of temporary protective coatings. When masking tape is used for a protective cover, the tape and any residual adhesive shall be removed just prior to applying the sealant. Solvents used to remove protective coating shall be as recommended by the manufacturer of the aluminum work and shall be non-staining.

3.1.5 Wood Surfaces

Wood surfaces to be in contact with sealants shall be free of splinters and sawdust or other loose particles.

3.2 APPLICATION

3.2.1 Masking Tape

Masking tape may be placed on the finish surface on one or both sides of a joint cavity to protect adjacent finish surfaces from primer or sealant smears. Masking tape shall be removed within 10 minutes after joint has been filled and tooled.

3.2.2 Backing

Backing shall be installed to provide the indicated sealant depth. The installation tool shall be shaped to avoid puncturing the backing.

3.2.3 Bond-Breaker

Bond-breaker shall be applied to fully cover the bottom of the joint without contaminating the sides where sealant adhesion is required.

3.2.4 Primer

Primer shall be used on concrete masonry units, wood, or other porous surfaces in accordance with instructions furnished with the sealant. Primer shall be applied to the joint surfaces to be sealed. Surfaces adjacent to joints shall not be primed.

3.2.5 Sealant

Sealant shall be used before expiration of shelf life. Multi-component sealants shall be mixed according to manufacturer's printed instructions. Sealant in guns shall be applied with a nozzle of proper size to fit the width of joint. Joints shall be sealed as detailed in the drawings. Sealant shall be forced into joints with sufficient pressure to expel air and fill the groove solidly. Sealant shall be installed to the indicated depth without displacing the backing. Unless otherwise indicated, specified, or recommended by the manufacturer, the installed sealant shall be dry tooled to produce a uniformly smooth surface free of wrinkles and to ensure full adhesion to the sides of the joint; the use of solvents, soapy water, etc., will not be allowed. Sealants shall be installed free of air pockets, foreign embedded matter, ridges and sags. Sealer shall be applied

over the sealant when and as specified by the sealant manufacturer.

3.3 CLEANING

The surfaces adjoining the sealed joints shall be cleaned of smears and other soiling resulting from the sealant application as work progresses.

-- End of Section --

SECTION TABLE OF CONTENTS

DIVISION 08 - DOORS AND WINDOWS

SECTION 08110

STEEL DOORS AND FRAMES

05/01

PART 1 GENERAL

1.1 REFERENCES
1.2 SUBMITTALS
1.3 DELIVERY, STORAGE, AND HANDLING

PART 2 PRODUCTS

2.1 STANDARD STEEL DOORS
2.1.1 Classification - Level, Performance, Model
2.1.1.1 Heavy Duty Doors
2.1.1.2 Extra Heavy Duty Doors
2.2 CUSTOM HOLLOW METAL DOORS
2.3 ACCESSORIES
2.3.1 Moldings
2.4 INSULATION CORES
2.5 STANDARD STEEL FRAMES
2.5.1 Welded Frames
2.5.2 Mullions and Transom Bars
2.5.3 Stops and Beads
2.5.4 Cased Openings
2.5.5 Anchors
2.5.5.1 Wall Anchors
2.5.5.2 Floor Anchors
2.6 FIRE DOORS AND FRAMES
2.6.1 Labels
2.6.2 Oversized Doors
2.6.3 Astragal on Fire Doors
2.7 WEATHERSTRIPPING
2.8 HARDWARE PREPARATION
2.9 FINISHES
2.9.1 Factory-Primed Finish
2.9.2 Hot-Dip Zinc-Coated and Factory-Primed Finish
2.10 FABRICATION AND WORKMANSHIP
2.10.1 Grouted Frames

PART 3 EXECUTION

3.1 INSTALLATION
3.1.1 Frames
3.1.2 Doors
3.1.3 Fire Doors and Frames
3.2 PROTECTION
3.3 CLEANING

-- End of Section Table of Contents --

UFGS-08110 (May 2001)

SECTION 08110

STEEL DOORS AND FRAMES

05/01

PART 1 GENERAL

1.1 REFERENCES

The publications listed below form a part of this specification to the extent referenced. The publications are referred to in the text by the basic designation only.

AMERICAN NATIONAL STANDARDS INSTITUTE (ANSI)

ANSI A250.6	(1997) Hardware on Standard Steel Doors (Reinforcement - Application)
ANSI A250.8	(1998) SDI-100 Recommended Specifications for Standard Steel Doors and Frames

ASTM INTERNATIONAL (ASTM)

ASTM A 653/A 653M	(2000) Steel Sheet, Zinc-Coated (Galvanized) or Zinc-Iron Alloy-Coated (Galvannealed) by the Hot-Dip Process
ASTM A 924/A 924M	(1999) General Requirements for Steel Sheet, Metallic-Coated by the Hot-Dip Process
ASTM C 578	(1995) Rigid, Cellular Polystyrene Thermal Insulation
ASTM C 591	(1994) Unfaced Preformed Rigid Cellular Polyisocyanurate Thermal Insulation
ASTM C 612	(1993) Mineral Fiber Block and Board Thermal Insulation
ASTM D 2863	(1997) Measuring the Minimum Oxygen Concentration to Support Candle-Like Combustion of Plastics (Oxygen Index)

DOOR AND HARDWARE INSTITUTE (DHI)

BHMA A115	(1991) Steel Door Preparation Standards (Consisting of A115.1 through A115.6 and A115.12 through A115.18)

HOLLOW METAL MANUFACTURERS ASSOCIATION (HMMA)

NAAMM HMMA HMM	(1992) Hollow Metal Manual

NATIONAL FIRE PROTECTION ASSOCIATION (NFPA)

NFPA 80	(1999) Fire Doors and Fire Windows
NFPA 252	(1999) Standard Methods of Fire Tests of Door Assemblies

INTERNATIONAL CODE COUNCIL (ICC)

ICC IBC	(2003) International Building Code

STEEL DOOR INSTITUTE (SDOI)

SDI 105	(1998) Recommended Erection Instructions for Steel Frames
SDI 111-F	Recommended Existing Wall Anchors for Standard Steel Doors and Frames
SDI 113	(1979) Apparent Thermal Performance of STEEL DOOR and FRAME ASSEMBLIES

UNDERWRITERS LABORATORIES (UL)

UL 10B	(1997) Fire Tests of Door Assemblies

1.2 SUBMITTALS

Submit the following in accordance with Section 01330, "Submittal Procedures."

SD-02 Shop Drawings

Doors; G, AE

Frames; G, AE

Accessories

Show elevations, construction details, metal gages, hardware provisions, method of glazing, and installation details.

Schedule of doors; G,AE

Schedule of frames; G, AE

Submit door and frame locations.

SD-03 Product Data

Doors; G, AE

Frames; G, AE

Accessories

Submit manufacturer's descriptive literature for doors, frames,

and accessories. Include data and details on door construction, panel (internal) reinforcement, insulation, and door edge construction. When "custom hollow metal doors" are provided in lieu of "standard steel doors," provide additional details and data sufficient for comparison to ANSI A250.8 requirements.

1.3 DELIVERY, STORAGE, AND HANDLING

Deliver doors, frames, and accessories undamaged and with protective wrappings or packaging. Provide temporary steel spreaders securely fastened to the bottom of each welded frame. Store doors and frames on platforms under cover in clean, dry, ventilated, and accessible locations, with 1/4 inch airspace between doors. Remove damp or wet packaging immediately and wipe affected surfaces dry. Replace damaged materials with new.

PART 2 PRODUCTS

2.1 STANDARD STEEL DOORS

ANSI A250.8, except as specified otherwise. Prepare doors to receive hardware specified in Section 08710, "Door Hardware." Undercut where indicated. Exterior doors shall have top edge closed flush and sealed to prevent water intrusion. Doors shall be 1 3/4 inches thick, unless otherwise indicated.

2.1.1 Classification - Level, Performance, Model

2.1.1.1 Heavy Duty Doors

ANSI A250.8, Level 2, physical performance Level B, Model 1, with core construction as required by the manufacturer for interior doors, of size(s) and design(s) indicated. Where vertical stiffener cores are required, the space between the stiffeners shall be filled with mineral board insulation.

2.1.1.2 Extra Heavy Duty Doors

ANSI A250.8, Level 3, physical performance Level A, Model 1 with core construction as required by the manufacturer for indicated exterior doors, of size(s) and design(s) indicated. Where vertical stiffenercores are required, the space between the stiffeners shall be filled with mineral board insulation.

2.2 CUSTOM HOLLOW METAL DOORS

Provide custom hollow metal doors where nonstandard steel doors are indicated. At the Contractor's option, custom hollow metal doors may be provided in lieu of standard steel doors. Door size(s), design, materials, construction, gages, and finish shall be as specified for standard steel doors and shall comply with the requirement of NAAMM HMMA HMM. Fill all spaces in doors with insulation. Close top and bottom edges with steel channels not lighter than 16 gage. Close tops of exterior doors flush with an additional channel and seal to prevent water intrusion. Prepare doors to receive hardware specified in Section 08710, "Door Hardware." Undercut doors where indicated. Doors shall be 1 3/4 inches thick, unless otherwise indicated. Frames for openings requiring an STC of 45 or greater shall be part of a total assembly of door, frame, and hardware specified in Section 08210 WOOD DOORS.

2.3 ACCESSORIES

2.3.1 Moldings

Provide moldings around glass of interior and exterior doors and louvers of interior doors. Provide nonremovable moldings on outside of exterior doors and on corridor side of interior doors. Other moldings may be stationary or removable. Secure inside moldings to stationary moldings, or provide snap-on moldings. Muntins shall interlock at intersections and shall be fitted and welded to stationary moldings.

2.4 INSULATION CORES

Insulated cores shall be of type specified, and provide an apparent U-factor of .48 in accordance with SDI 113 and shall conform to:

a. Rigid Polyurethane Foam: ASTM C 591, Type 1 or 2, foamed-in-place or in board form, with oxygen index of not less than 22 percent when tested in accordance with ASTM D 2863; or

b. Rigid Polystyrene Foam Board: ASTM C 578, Type I or II; or

c. Mineral board: ASTM C 612, Type I.

2.5 STANDARD STEEL FRAMES

ANSI A250.8, except as otherwise specified. Form frames to sizes and shapes indicated, with welded corners. Provide steel frames for doors, transoms, sidelights, mullions, cased openings, and interior glazed panels, unless otherwise indicated.

2.5.1 Welded Frames

Continuously weld frame faces at corner joints. Mechanically interlock or continuously weld stops and rabbets. Grind welds smooth.

2.5.2 Mullions and Transom Bars

Mullions and transom bars shall be closed or tubular construction and shall member with heads and jambs butt-welded thereto or knock-down for field assembly. Bottom of door mullions shall have adjustable floor anchors and spreader connections.

2.5.3 Stops and Beads

Form stops and beads from 20 gage steel. Provide for glazed and other openings in standard steel frames. Secure beads to frames with oval-head, countersunk Phillips self-tapping sheet metal screws or concealed clips and fasteners. Space fasteners approximately 12 to 16 inches on centers. Miter molded shapes at corners. Butt or miter square or rectangular beads at corners.

2.5.4 Cased Openings

Fabricate frames for cased openings of same material, gage, and assembly as specified for metal door frames, except omit door stops and preparation for hardware.

2.5.5 Anchors

Provide anchors to secure the frame to adjoining construction. Provide steel anchors, zinc-coated or painted with rust-inhibitive paint, not lighter than 18 gage.

2.5.5.1 Wall Anchors

Provide at least three anchors for each interior jamb and four anchors for each exterior jamb. For frames which are more than 7.5 feet in height, provide one additional anchor for each jamb for each additional 2.5 feet or fraction thereof.

a. Masonry: Provide anchors of corrugated or perforated steel straps or 3/16 inch diameter steel wire, adjustable or T-shaped;

b. Stud partitions: Weld or otherwise securely fasten anchors to backs of frames. Design anchors to be fastened to closed steel studs with sheet metal screws, and to open steel studs by wiring or welding;

c. Completed openings: Secure frames to previously placed concrete or masonry with expansion bolts in accordance with SDI 111-F; and

2.5.5.2 Floor Anchors

Provide floor anchors drilled for 3/8 inch anchor bolts at bottom of each jamb member. Where floor fill occurs, terminate bottom of frames at the indicated finished floor levels and support by adjustable extension clips resting on and anchored to the structural slabs.

2.6 FIRE DOORS AND FRAMES

NFPA 80, ICC IBC and this specification. The requirements of NFPA 80 shall take precedence over details indicated or specified.

2.6.1 Labels

Fire doors and frames shall bear the label of Underwriters Laboratories (UL), Factory Mutual Engineering and Research (FM), or Warnock Hersey International (WHI) attesting to the rating required. Testing shall be in accordance with NFPA 252 or UL 10B. Labels shall be metal with raised letters, and shall bear the name or file number of the door and frame manufacturer. Labels shall be permanently affixed at the factory to frames and to the hinge edge of the door. Door labels shall not be painted.

2.6.2 Oversized Doors

For fire doors and frames which exceed the size for which testing and labeling are available, furnish certificates stating that the doors and frames are identical in design, materials, and construction to a door which has been tested and meets the requirements for the class indicated.

2.6.3 Astragal on Fire Doors

On pairs of labeled fire doors, conform to NFPA 80 and UL requirements.

2.7 WEATHERSTRIPPING

As specified in Section 08710, "Door Hardware."

2.8 HARDWARE PREPARATION

Provide minimum hardware reinforcing gages as specified in ANSI A250.6. Drill and tap doors and frames to receive finish hardware. Prepare doors and frames for hardware in accordance with the applicable requirements of ANSI A250.8 and ANSI A250.6. For additional requirements refer to BHMA A115. Drill and tap for surface-applied hardware at the project site. Build additional reinforcing for surface-applied hardware into the door at the factory. Locate hardware in accordance with the requirements of ANSI A250.8, as applicable. Punch door frames , with the exception of frames that will have weatherstripping gasketing, to receive a minimum of two rubber or vinyl door silencers on lock side of single doors and one silencer for each leaf at heads of double doors. Set lock strikes out to provide clearance for silencers.

2.9 FINISHES

2.9.1 Factory-Primed Finish

All surfaces of doors and frames shall be thoroughly cleaned, chemically treated and factory primed with a rust inhibiting coating as specified in ANSI A250.8. , or paintable A25 galvannealed steel without primer. Where coating is removed by welding, apply touchup of factory primer.

2.9.2 Hot-Dip Zinc-Coated and Factory-Primed Finish

Fabricate exterior doors and frames from hot dipped zinc coated steel, alloyed type, that complies with ASTM A 924/A 924M and ASTM A 653/A 653M. The Coating weight shall meet or exceed the minimum requirements for coatings having 0.4 ounces per square foot, total both sides, i.e., A40. Repair damaged zinc-coated surfaces by the application of zinc dust paint. Thoroughly clean and chemically treat to insure maximum paint adhesion. Factory prime as specified in ANSI A250.8. Provide for exterior doors.

2.10 FABRICATION AND WORKMANSHIP

Finished doors and frames shall be strong and rigid, neat in appearance, and free from defects, waves, scratches, cuts, dents, ridges, holes, warp, and buckle. Molded members shall be clean cut, straight, and true, with joints coped or mitered, well formed, and in true alignment. Dress exposed welded and soldered joints smooth. Design door frame sections for use with the wall construction indicated. Corner joints shall be well formed and in true alignment. Conceal fastenings where practicable.

2.10.1 Grouted Frames

For frames to be installed in exterior walls and to be filled with mortar or grout, fill the stops with strips of rigid insulation to keep the grout out of the stops and to facilitate installation of stop-applied head and jamb seals.

PART 3 EXECUTION

3.1 INSTALLATION

3.1.1 Frames

Set frames in accordance with SDI 105. Plumb, align, and brace securely until permanent anchors are set. Anchor bottoms of frames with expansion bolts or powder-actuated fasteners. Build in or secure wall anchors to adjoining construction. Where frames require ceiling struts or overhead bracing, anchor frames to the struts or bracing. Backfill frames with mortar. When an additive is provided in the mortar, coat inside of frames with corrosion-inhibiting bituminous material. For frames in exterior walls, ensure that stops are filled with rigid insulation before grout is placed.

3.1.2 Doors

Hang doors in accordance with clearances specified in ANSI A250.8. After erection and glazing, clean and adjust hardware.

3.1.3 Fire Doors and Frames

Install fire doors and frames, including hardware, in accordance with NFPA 80.

3.2 PROTECTION

Protect doors and frames from damage. Repair damaged doors and frames prior to completion and acceptance of the project or replace with new, as directed. Wire brush rusted frames until rust is removed. Clean thoroughly. Apply an all-over coat of rust-inhibitive paint of the same type used for shop coat.

3.3 CLEANING

Upon completion, clean exposed surfaces of doors and frames thoroughly. Remove mastic smears and other unsightly marks.

-- End of Section --

SECTION TABLE OF CONTENTS

DIVISION 08 - DOORS AND WINDOWS

SECTION 08120

ALUMINUM DOORS AND FRAMES

09/99

PART 1 GENERAL

1.1 REFERENCES
1.2 PERFORMANCE REQUIREMENTS
1.2.1 Structural
1.2.1.1 Anti-terrorism/Force Protection Requirements
1.2.2 Air Infiltration
1.2.3 Water Penetration
1.3 SUBMITTALS
1.4 DELIVERY, STORAGE, AND HANDLING

PART 2 PRODUCTS

2.1 DOORS AND FRAMES
2.2 MATERIALS
2.2.1 Anchors
2.2.2 Weatherstripping
2.2.3 Aluminum Alloy for Doors and Frames
2.2.4 Fasteners
2.2.5 Structural Steel
2.2.6 Aluminum Paint
2.3 FABRICATION
2.3.1 Aluminum Frames
2.3.2 Aluminum Doors
2.3.2.1 Full Glazed Stile and Rail Doors
2.3.3 Welding and Fastening
2.3.4 Weatherstripping
2.3.5 Anchors
2.3.6 Provisions for Hardware
2.3.7 Provisions for Glazing
2.3.8 Finishes
2.3.8.1 Anodic Coating
2.3.8.2 Organic Coating

PART 3 EXECUTION

3.1 INSTALLATION
3.2 PROTECTION FROM DISSIMILAR MATERIALS
3.2.1 Dissimilar Metals
3.2.2 Drainage from Dissimilar Metals
3.2.3 Masonry and Concrete
3.2.4 Wood or Other Absorptive Materials
3.3 CLEANING
3.4 PROTECTION

-- End of Section Table of Contents --

UFGS-08120N (September 1999)

SECTION 08120

ALUMINUM DOORS AND FRAMES
09/99

PART 1 GENERAL

1.1 REFERENCES

The publications listed below form a part of this specification to the extent referenced. The publications are referred to in the text by the basic designation only.

ALUMINUM ASSOCIATION (AA)

AA DAF-45	(1980) Aluminum Finishes

AMERICAN ARCHITECTURAL MANUFACTURERS ASSOCIATION (AAMA)

AAMA 605.2	(1992; Addendum 1995) High Performance Organic Coatings on Architectural Extrusions and Panels

AMERICAN SOCIETY FOR TESTING AND MATERIALS (ASTM)

ASTM A 36/A 36M	(1997; Rev. A) Carbon Structural Steel
ASTM B 209	(1996) Aluminum and Aluminum-Alloy Sheet and Plate
ASTM B 221	(1996) Aluminum and Aluminum-Alloy Extruded Bars, Rods, Wire, Profiles, and Tubes
ASTM E 283	(1991) Rate of Air Leakage Through Exterior Windows, Curtain Walls, and Doors Under Specified Pressure Differences Across the Specimen
ASTM E 331	(1996) Water Penetration of Exterior Windows, Curtain Walls, and Doors by Uniform Static Air Pressure Difference

*2

UNIFIED FACILITIES CRITERIA (UFC)

UFC 4-010-01	(8 Oct 2003) Unified Facilities Criteria (UFC) DoD Minimum Anti-Terrorism Standards for Buildings

1.2 PERFORMANCE REQUIREMENTS

1.2.1 Structural

Shapes and thicknesses of framing members shall be sufficient to withstand

the design wind load indicated abd a blast load of 144 pounds per square foot, with a deflection of not more than 1/175 times the length of the member and a safety factor of not less than 1.65. Provide glazing beads, moldings, and trim of not less than 0.050 inch nominal thickness.

*2

1.2.1.1 Anti-terrorism/Force Protection Requirements

In addition to the requirements specified above, structural performance of windows shall meet the requirements of UFC 4-010-01.

1.2.2 Air Infiltration

When tested in accordance with ASTM E 283, air infiltration shall not exceed 0.06 cubic feet per minute per square foot of fixed area at a test pressure of 6.24 pounds per square foot (50 mile per hour wind).

1.2.3 Water Penetration

When tested in accordance with ASTM E 331, there shall be no water penetration at a pressure of 8 pounds per square foot of fixed area.

1.3 SUBMITTALS

Submit the following in accordance with Section 01330, "Submittal Procedures."

SD-02 Shop Drawings

Doors and frames; G, AE

Show elevations of each door type, size of doors and frames, metal gages, details of door and frame construction, methods of anchorage, glazing details, weatherstripping, provisions for and location of hardware, and details of installation.

SD-08 Manufacturer's Instructions

Doors and frames

Submit detail specifications and instructions for installation, adjustments, cleaning, and maintenance.

1.4 DELIVERY, STORAGE, AND HANDLING

Inspect materials delivered to the site for damage. Unload and store with minimum handling. Provide storage space in dry location with adequate ventilation, free from dust or water, and easily accessible for inspection and handling. Stack materials on nonabsorptive strips or wood platforms. Do not cover doors and frames with tarps, polyethylene film, or similar coverings. Protect finished surfaces during shipping and handling using manufacturer's standard method, except that no coatings or lacquers shall be applied to surfaces to which calking and glazing compounds must adhere.

PART 2 PRODUCTS

2.1 DOORS AND FRAMES

Swing-type aluminum doors and frames of size, design, and location indicated. Provide doors complete with frames, framing members , transoms,

adjoining sidelights, trim, and accessories.

2.2 MATERIALS

2.2.1 Anchors

Stainless steel or steel with hot-dipped galvanized finish.

2.2.2 Weatherstripping

Continuous wool pile, silicone treated, or type recommended by door manufacturer.

2.2.3 Aluminum Alloy for Doors and Frames

ASTM B 221, Alloy 6063-T5 for extrusions. ASTM B 209, alloy and temper best suited for aluminum sheets and strips.

2.2.4 Fasteners

Hard aluminum or stainless steel.

2.2.5 Structural Steel

ASTM A 36/A 36M.

2.2.6 Aluminum Paint

Type as recommended by aluminum door manufacturer.

2.3 FABRICATION

2.3.1 Aluminum Frames

Extruded aluminum shapes with contours approximately as indicated. Provide removable glass stops and glazing beads for frames accommodating fixed glass. Use countersunk stainless steel Phillips screws for exposed fastenings, and space not more than 12 inches o.c. Mill joints in frame members to a hairline fit, reinforce, and secure mechanically. All exterior framing shsll and interior framing may be of thermal break construction

2.3.2 Aluminum Doors

Of type, size, and design indicated and not less than 1 3/4 inches thick. Minimum wall thickness, 0.125 inch, except beads and trim, 0.050 inch. Door sizes shown are nominal and shall include standard clearances as follows: 0.093 inch at hinge and lock stiles, 0.125 inch between meeting stiles, 0.125 inch at top rails, 0.187 inch between bottom and threshold, and 0.687 inch between bottom and floor. Bevel single-acting doors 0.063 or 0.125 inch at lock, hinge, and meeting stile edges.

2.3.2.1 Full Glazed Stile and Rail Doors

Doors shall have wide stiles and rails as indicated. Fabricate from extruded aluminum hollow seamless tubes or from a combination of open-shaped members interlocked or welded together. Fasten top and bottom rail together by means of welding or by 3/8 or 1/2 inch diameter cadmium-plated tensioned steel tie rods. Provide an adjustable mechanism

of jack screws or other methods in the top rail to allow for minor clearance adjustments after installation.

2.3.3 Welding and Fastening

Where possible, locate welds on unexposed surfaces. Dress welds on exposed surfaces smoothly. Select welding rods, filler wire, and flux to produce a uniform texture and color in finished work. Remove flux and spatter from surfaces immediately after welding. Exposed screws or bolts will be permitted only in inconspicuous locations, and shall have countersunk heads. Weld concealed reinforcements for hardware in place.

2.3.4 Weatherstripping

Provide on stiles and rails of exterior doors. Fit into slots which are integral with doors or frames. Weatherstripping shall be replaceable without special tools, and adjustable at meeting rails of pairs of doors. Installation shall allow doors to swing freely and close positively. Air leakage of a single leaf weatherstripped door shall not exceed 1.25 cubic feet per minute of air per square foot of door area when tested in accordance with ASTM E 283.

2.3.5 Anchors

On the backs of subframes, provide anchors of the sizes and shapes indicated for securing subframes to adjacent construction. Anchor transom bars at ends and mullions at head and sill. Reinforce and anchor freestanding door frames to floor construction as indicated on approved shop drawings and in accordance with manufacturer's recommendation. Place anchors near top and bottom of each jamb and at intermediate points not more than 25 inches apart.

2.3.6 Provisions for Hardware

Hardware is specified in Section 08710, "Door Hardware." Deliver hardware templates and hardware (except field-applied hardware) to the door manufacturer for use in fabrication of aluminum doors and frames. Cut, reinforce, drill, and tap doors and frames at the factory to receive template hardware. Provide doors to receive surface-applied hardware, except push plates, kick plates, and mop plates, with reinforcing only; drill and tap in the field. Provide hardware reinforcements of stainless steel or steel with hot-dipped galvanized finish, and secure with stainless steel screws.

2.3.7 Provisions for Glazing

Provide extruded aluminum snap-in glazing beads on interior side of doors. Provide extruded aluminum, theft-proof, snap-in glazing beads or fixed glazing beads on exterior or security side of doors. Glazing beads shall have vinyl insert glazing gaskets. Design glazing beads to receive glass of thickness indicated or specified. Glazing beads, channels and stops shall provide a depth or "bite" of not less than one inch on all sides of glass. Glazing is specified in Section 08810A GLASS AND GLAZING.

2.3.8 Finishes

Provide exposed aluminum surfaces with factory finish of anodic coating or organic coating.

2.3.8.1 Anodic Coating

Clean exposed aluminum surfaces and provide an anodized finish conforming to AA DAF-45. Finish shall be integral color-anodized, designation AA-M10-C22-A42, Architectural Class I 0.7 mil or thicker or electrolytically deposited color-anodized, designation AA-M10-C22-A44, Architectural Class I 0.7 mil or thicker. Color shall be as indicated.

2.3.8.2 Organic Coating

Clean and prime exposed aluminum surfaces. Provide a high-performance finish in accordance with AAMA 605.2 with total dry film thickness of not less than 1.2 mils. The finish color shall be as indicated.

PART 3 EXECUTION

3.1 INSTALLATION

Plumb, square, level, and align frames and framing members to receive doors , transoms, adjoining sidelights, adjoining window walls. Anchor frames to adjacent construction as indicated and in accordance with manufacturer's printed instructions. Anchor bottom of each frame to rough floor construction with 3/32 inch thick stainless steel angle clips secured to back of each jamb and to floor construction; use stainless steel bolts and expansion rivets for fastening clip anchors. Seal metal-to-metal joints between framing members as specified in Section 07900A, "Joint Sealing". Hang doors to produce clearances specified in paragraph entitled "Aluminum Doors," of this section. After erection and glazing, adjust doors and hardware to operate properly.

3.2 PROTECTION FROM DISSIMILAR MATERIALS

3.2.1 Dissimilar Metals

Where aluminum surfaces come in contact with metals other than stainless steel, zinc, or small areas of white bronze, protect from direct contact by one or a combination of the following methods:

a. Paint the dissimilar metal with one coat of heavy-bodied bituminous paint.

b. Apply a good quality elastomeric sealant between the aluminum and the dissimilar metal.

c. Paint the dissimilar metal with one coat of primer and one coat of aluminum paint.

d. Use a nonabsorptive tape or gasket in permanently dry locations.

3.2.2 Drainage from Dissimilar Metals

In locations where drainage from dissimilar metals has direct contact with aluminum, provide protective paint, to prevent aluminum discoloration.

3.2.3 Masonry and Concrete

Provide aluminum surfaces in contact with mortar, concrete, or other masonry materials with one coat of heavy-bodied bituminous paint.

3.2.4 Wood or Other Absorptive Materials

Provide aluminum surfaces in contact with absorptive materials subject to frequent moisture, and aluminum surfaces in contact with treated wood, with two coats of aluminum paint or one coat of heavy-bodied bituminous paint. In lieu of painting the aluminum, the Contractor shall have the option of painting the wood or other absorptive surface with two coats of aluminum paint and sealing the joints with elastomeric sealant.

3.3 CLEANING

Upon completion of installation, clean door and frame surfaces in accordance with door manufacturer's recommended procedure. Do not use abrasive, caustic, or acid cleaning agents.

3.4 PROTECTION

Protect doors and frames from damage and from contamination by other materials such as cement mortar. Prior to completion and acceptance of the work, restore damaged doors and frames to original condition, or replace with new ones.

-- End of Section --

SECTION TABLE OF CONTENTS

DIVISION 08 - DOORS AND WINDOWS

SECTION 08210

WOOD DOORS

09/99

PART 1 GENERAL

1.1 REFERENCES
1.2 SUBMITTALS
1.3 DELIVERY, STORAGE, AND HANDLING
1.4 WARRANTY

PART 2 PRODUCTS

2.1 DOORS
2.1.1 Flush Doors
2.1.1.1 Interior Flush Doors
2.1.2 Acoustical Door Assemblies
2.1.2.1 Doors
2.1.2.2 Frames
2.1.2.3 Perimeter Seals
2.1.3 Composite-Type Fire Doors
2.2 ACCESSORIES
2.2.1 Door Light Openings
2.2.2 Additional Hardware Reinforcement
2.3 FABRICATION
2.3.1 Marking
2.3.2 Quality and Construction
2.3.3 Adhesives and Bonds
2.3.4 Prefitting
2.3.5 Finishes
2.3.5.1 Field Painting
2.4 SOURCE QUALITY CONTROL

PART 3 EXECUTION

3.1 INSTALLATION
3.1.1 Fire Doors
3.1.2 Acoustical Door Assemblies

-- End of Section Table of Contents --

UFGS-08210 (September 1999)

SECTION 08210

WOOD DOORS
09/99

PART 1 GENERAL

1.1 REFERENCES

The publications listed below form a part of this specification to the extent referenced. The publications are referred to in the text by the basic designation only.

ASTM INTERNATIONAL (ASTM)

ASTM E 90	(1997) Laboratory Measurement of Airborne Sound Transmission Loss of Building Partitions and Elements
ASTM E 152	(1981; Rev. A) Fire Tests of Door Assemblies

INTERNATIONAL CODE COUNCIL (ICC)

ICC IBC	(2003) International Building Code

NATIONAL FIRE PROTECTION ASSOCIATION (NFPA)

NFPA 80	(1995) Fire Doors and Fire Windows
NFPA 252	(1995) Fire Tests of Door Assemblies

WINDOW AND DOOR MANUFACTURERS ASSOCIATION (WDMA)

WDMA I.S. 1-A	(1993) Architectural Wood Flush Doors
WDMA TM-5	(1990) Split Resistance Test
WDMA TM-7	(1990) Cycle - Slam Test
WDMA TM-8	(1990) Hinge Loading Resistance Test

UNDERWRITERS LABORATORIES (UL)

UL 10B	(1997) Fire Tests of Door Assemblies

1.2 SUBMITTALS

Submit the following in accordance with Section 01330, "Submittal Procedures."

SD-02 Shop Drawings

Doors; G, AE

Submit drawings or catalog data showing each type of door unit . Drawings and data shall indicate door type and construction, sizes, thickness, methods of assembly, and glazing,.

SD-03 Product Data

Doors

Accessories

Sample warranty

Fire resistance rating

SD-06 Test Reports

Split resistance

Cycle-slam

Hinge loading resistance

Submit split resistance test report for doors tested in accordance with WDMA TM-5, cycle-slam test report for doors tested in accordance with WDMA TM-7, and hinge loading resistance test report for doors tested in accordance with WDMA TM-8.

SD-07 Certificates

Certified wood; G, RO

Certification from manufacturer attenting to the percentage of certified wood or wood products in the door construction

1.3 DELIVERY, STORAGE, AND HANDLING

Deliver doors to the site in an undamaged condition and protect against damage and dampness. Stack doors flat under cover. Support on blocking, a minimum of 4 inches thick, located at each end and at the midpoint of the door. Store doors in a well-ventilated building so that they will not be exposed to excessive moisture, heat, dryness, direct sunlight, or extreme changes of temperature and humidity. Do not store in a building under construction until concrete, masonry work, and plaster are dry. Replace defective or damaged doors with new ones.

1.4 WARRANTY

Warranty shall warrant doors free of defects as set forth in the door manufacturer's standard door warranty.

PART 2 PRODUCTS

2.1 DOORS

Provide doors of the types, sizes, and designs indicated and specified. Doors shall be constructed using local woods or wood from managed forests (" Certified Wood."

2.1.1 Flush Doors

Flush doors shall conform to WDMA I.S. 1-A. Stile edge bands of doors to receive natural finish shall be hardwood, compatible with face veneer. Stile edge bands of doors to be painted shall be mill option specie. No visible finger joints will be accepted in stile edge bands. When used, locate finger-joints under hardware. Fire rated doors shall also meet the requirements of ICC IBC for positive pressure and smoke seals.

2.1.1.1 Interior Flush Doors

Provide staved lumber or particleboard core, Type II flush doors conforming to WDMA I.S. 1-A with faces of premium grade natural birch. Hardwood veneers shall be rotary cut random matched.

2.1.2 Acoustical Door Assemblies

Acoustical door assemblies shall consist of wood doors, hollow metal frames, and adjustable perimeter seals. Assemblies shall be furnished as complete assemblies from a single vendor and shall have Sound Transmission Class (STC) rating equal to that of the surrounding wall, tested in accordance with ASTM E 90.

2.1.2.1 Doors

WDMA I.S. 1-A, solid core, constructed to provide Sound Transmission Class (STC) rating equal to the when tested in accordance with ASTM E 90.

2.1.2.2 Frames

Hollow steel, as specified in Section 08110STEEL DOORS AND FRAMES.

2.1.2.3 Perimeter Seals

As standard with the manufacturer of the door assembly to achieve indicated STC rating for the complete assembly.

2.1.3 Composite-Type Fire Doors

Doors specified or indicated to have a fire resistance rating shall conform to the requirements of UL 10B, ASTM E 152, or NFPA 252 for the class of door indicated. Affix a permanent metal label with raised or incised markings indicating testing agency's name and approved hourly fire rating to hinge edge of each door.

2.2 ACCESSORIES

2.2.1 Door Light Openings

Provide glazed openings with the manufacturer's standard wood moldings except that moldings for doors to receive natural finish shall be of the same specie and color as the face veneers. Moldings on exterior doors shall have sloped surfaces. Moldings for flush doors shall be lip type. Provide glazed openings in fire-rated doors with fire rated frames. Glazing is specified in Section 08810A GLASS AND GLAZING,

2.2.2 Additional Hardware Reinforcement

Provide fire rated doors with hardware reinforcement blocking. Top, bottom

and intermediate rail blocks shall measure 5 inches minimum by full core width. Reinforcement blocking shall be in compliance with the manufacturer's labeling requirements and shall not be mineral material similar to the core.

2.3 FABRICATION

2.3.1 Marking

Each door shall bear a stamp, brand, or other identifying mark indicating quality and construction of the door.

2.3.2 Quality and Construction

Identify the standard on which the construction of the door was based , identify the standard under which preservative treatment was made, and identify doors having a Type I glue bond.

2.3.3 Adhesives and Bonds

WDMA I.S. 1-A. Use Type I bond for exterior doors and Type II bond for interior doors. Adhesive for doors to receive a natural finish shall be nonstaining.

2.3.4 Prefitting

At the Contractor's option, doors may be provided factory pre-fit. Doors shall be sized and machined at the factory by the door manufacturer in accordance with the standards under which they are produced. The work shall include sizing, bevelling edges, mortising, and drilling for hardware and providing necessary beaded openings for glass and louvers. Provide the door manufacturer with the necessary hardware samples, and frame and hardware schedules as required to coordinate the work.

2.3.5 Finishes

2.3.5.1 Field Painting

Factory prime or seal doors, and field paint as specified in Section 09900, "Paints and Coatings."

2.4 SOURCE QUALITY CONTROL

Stiles of "B" and "C" label fire doors utilizing standard mortise leaf hinges shall meet the following performance criteria:

a. Split resistance: Average of ten test samples shall be not less than 500 pounds load when tested in accordance with WDMA TM-5.

b. Cycle-slam: 200,000 cycles with no loose hinge screws or other visible signs of failure when tested in accordance with the requirements of WDMA TM-7.

c. Hinge loading resistance: Average of ten test samples shall be not less than 700 pounds load when tested for direct screw withdrawal in accordance with WDMA TM-8 using a No. 12, 1 1/4 inch long, steel, fully threaded wood screw. Drill 5/32 inch pilot hole, use 1 1/2 inch opening around screw for bearing surface, and engage screw full, except for last 1/8 inch. Do not use a steel

plate to reinforce screw area.

PART 3 EXECUTION

3.1 INSTALLATION

Before installation, seal top and bottom edges of doors with the approved water-resistant sealer. Seal cuts made on the job immediately after cutting using approved water-resistant sealer. Fit, trim, and hang doors with a 1/16 inch minimum, 1/8 inch maximum clearance at sides and top, and a 3/16 inch minimum, 1/4 inch maximum clearance over thresholds. Provide 3/8 inch minimum, 7/16 inch maximum clearance at bottom where no threshold occurs. Bevel edges of doors at the rate of 1/8 inch in 2 inches. Door warp shall not exceed 1/4 inch when measured in accordance with WDMA I.S. 1-A.

3.1.1 Fire Doors

Install fire doors in accordance with NFPA 80. Do not paint over labels.

3.1.2 Acoustical Door Assemblies

Acousrical door assemblies shall be installed in accordance with the manufacturer's printed instructions. Hardware and perimeter seals shall be adjusted for proper operation.

-- End of Section --

SECTION TABLE OF CONTENTS

DIVISION 08 - DOORS AND WINDOWS

SECTION 08331A

METAL ROLLING COUNTER DOOR (FIRE SHUTTER)

12/03

PART 1 GENERAL

1.1 REFERENCES
1.2 SUBMITTALS
1.3 GENERAL REQUIREMENTS
1.4 DELIVERY AND STORAGE
1.5 WARRANTY

PART 2 PRODUCTS

2.1 BASIC COMPONENTS
2.1.1 Curtain
2.1.2 Jamb Guides
2.1.3 Counterbalance Shaft Assembly
2.1.4 Brackets
2.1.5 Hood
2.1.6 Locks
2.2 FIRE-RATED ROLLING COUNTER DOOR
2.3 OPERATION
2.3.1 Manual Operation
2.4 AUTOMATIC CLOSING DEVICE
2.5 FINISH

PART 3 EXECUTION

3.1 INSTALLATION
3.2 CLEANING
3.3 TESTS

-- End of Section Table of Contents --

UFGS-08331A (December 2003)

SECTION 08331A

METAL ROLLING COUNTER DOOR (FIRE SHUTTER)
12/03

PART 1 GENERAL

1.1 REFERENCES

The publications listed below form a part of this specification to the extent referenced. The publications are referred to within the text by the basic designation only.

ASTM INTERNATIONAL (ASTM)

ASTM A 240/A 240M	(2003c) Chromium and Chromium-Nickel Stainless Steel Plate, Sheet, and Strip for Pressure Vessels for General Applications
ASTM A 653/A 653M	(2003) Steel Sheet, Zinc-Coated (Galvanized) or Zinc-Iron Alloy-Coated (Galvannealed) by the Hot-Dip Process

NATIONAL FIRE PROTECTION ASSOCIATION (NFPA)

NFPA 80	(1999) Fire Doors and Fire Windows

1.2 SUBMITTALS

Government approval is required for submittals with a "G" designation; submittals not having a "G" designation are for information only or as otherwise designated. When used, a designation following the "G" designation identifies the office that will review the submittal for the Government. The following shall be submitted in accordance with Section 01330 SUBMITTAL PROCEDURES:

SD-02 Shop Drawings

Approved Detail Drawings

Drawings showing elevations of each door type, details of anchorage, details of construction, location and description of hardware, shape and thickness of materials, details of joints and connections, and details of guides and fittings. A schedule showing the location of each counter door shall be included with the drawings.

SD-03 Product Data

Rolling Counter Doors

Manufacturer's descriptive data and catalog cuts.

Installation

Cleaning

Manufacturer's preprinted installation and cleaning instructions.

SD-10 Operation and Maintenance Data

Operation

Six complete copies of maintenance instructions listing routine maintenance procedures, possible breakdowns and repairs, troubleshooting guides, and simplified diagrams for the equipment as installed. Spare parts data for each different item of material and equipment specified shall be supplied not later than 30 days prior to the date of beneficial occupancy. The data shall include a complete list of parts and supplies, with current unit prices and source of supply, and a list of the parts recommended by the manufacturer to be replaced after 3 years of service.

1.3 GENERAL REQUIREMENTS

Rolling counter doors shall be of the type, size, and design indicated on the drawings, and shall be the standard product of a manufacturer regularly engaged in the production of rolling counter doors. Each door shall be provided with a permanent label showing the manufacturer's name and address and the model number of the door.

1.4 DELIVERY AND STORAGE

Rolling counter doors shall be delivered to the jobsite wrapped in a protective covering with the brands and names clearly marked thereon. Rolling counter doors shall be stored in accordance with the manufacturer's instructions in a dry location that is adequately ventilated and free from dust, water, or other contaminants, and in a manner that permits easy access for inspecting and handling. Doors shall be handled carefully to prevent damage. Damaged items that cannot be restored to like-new condition shall be replaced.

1.5 WARRANTY

Manufacturer's standard performance guarantees or warranties that extend beyond a 1 year period shall be provided.

PART 2 PRODUCTS

2.1 BASIC COMPONENTS

2.1.1 Curtain

The curtain shall be fabricated of 22 gauge Type 304 stainless steel slats conforming to ASTM A 240/A 240M, Type 304 or Type 430, or 22 gauge galvanized steel slats conforming to ASTM A 653/A 653M, Coating Designation G60 as specified. Thickness of slat material shall be as required by width of opening or as required by specified fire-rating. Slats shall be approximately 1-1/4 to 1-1/2 inch wide with a depth of crown of 1/2 inch. Alternate slats shall be fitted with end locks to maintain curtain alignment. Bottom of curtain shall be provided with angle or tubular bar reinforcement matching the curtain, and fitted with a resilient bottom seal.

2.1.2 Jamb Guides

Guides shall be of 13 gauge minimum thickness stainless steel conforming to ASTM A 240/A 240M, Type 304 or Type 430or 13 gauge minimum thickness galvanized steel angles conforming to ASTM A 653/A 653M, Coating Designation G60, matching curtain material.

2.1.3 Counterbalance Shaft Assembly

The curtain shall be coiled around a steel tube of sufficient thickness and diameter to prevent deflection exceeding 0.03 inch per foot. The barrel shall contain oil tempered helical steel torsion springs capable of sufficient torque to counterbalance the weight of the curtain. Springs shall be calculated to provide a minimum of 7,500 operating cycles (one complete cycle of door operation will begin with the door in the closed position, move to the full open position and return to the closed position).

2.1.4 Brackets

Brackets shall be a minimum 12 gauge thickness steel if flat plate, or 16 gauge thickness if there are a minimum of 3 returns of 3/4 inch width.

2.1.5 Hood

The hood shall be of 24 gauge stainless steel conforming to ASTM A 240/A 240M, Type 304 or Type 430 or 24 gauge galvanized steel conforming to ASTM A 653/A 653M, Coating Designation G60.

2.1.6 Locks

The curtain shall be locked at both sides of bottom bar by a chrome-plated cylinder lock keyed into the building keying system. Lock shall be on the control room side of the counter door. Keying shall conform to Section 08710 DOOR HARDWARE.

2.2 FIRE-RATED ROLLING COUNTER DOOR

Fire-rated rolling counter doors shall be as shown and shall conform to the requirements specified and to NFPA 80 for the class indicated. Doors shall bear the labels of a recognized testing agency indicating the applicable fire resistance rating. The construction details necessary for labeled rolling counter doors shall take precedence over details indicated or specified herein. Door curtains, guides and hood shall be stainless steel or galvanized steel. Fire-rated rolling counter doors shall be complete with hardware, accessories, and automatic closing device. Rolling counter doors in exit corridor walls shall be provided with perimeter smoke and draft control gasketing.

2.3 OPERATION

2.3.1 Manual Operation

The curtain shall be operated by means of manual push-up with lift handles or continuous full width lift bar.

2.4 AUTOMATIC CLOSING DEVICE

Fire-rated counter doors shall be equipped with an automatic closing device which shall operate upon activation of the building's fire alarm system.

Fire and smoke doors shall be easily reset by the facility user after they have been released by the detection system. Resetting the door shall not require the use of special tools.

2.5 FINISH

Exposed parts of the counter door, including the curtain, bottom rail, guides, and hood shall be of uniform finish and appearance. Stainless steel shall have a No. 4 finish. Steel galvanized coating shall have a prime coat and a baked-on or powder-coated Factory top coat finish. All other steel parts shall be given a shop coat of primer paint standard with the manufacturer. Factory coated color shall be as indicated.

PART 3 EXECUTION

3.1 INSTALLATION

Doors shall be installed in accordance with approved detail drawings and manufacturer's instructions. Anchors and inserts for guides, brackets, hardware, and other accessories shall be accurately located. Upon completion, doors shall be free from warp, twist, or distortion. Doors shall be lubricated, properly adjusted, and demonstrated to operate freely. Fire-door installation shall be in conformance with NFPA 80 for the class indicated and the manufacturer's instructions.

3.2 CLEANING

Stainless steel doors shall be cleaned in accordance with manufacturer's approved instructions.

3.3 TESTS

The fire doors shall be drop tested in accordance with NFPA 80 to show proper operation and full automatic closure and shall be reset in accordance with the manufacturer's instructions. A written record of initial test shall be provided to the Contracting Officer.

-- End of Section --

SECTION TABLE OF CONTENTS

DIVISION 08 - DOORS AND WINDOWS

SECTION 08361

SECTIONAL OVERHEAD DOORS

08/01

PART 1 GENERAL

1.1 REFERENCES
1.2 SUBMITTALS
1.3 DELIVERY, STORAGE, AND HANDLING

PART 2 PRODUCTS

2.1 MATERIALS
2.1.1 Hard-Drawn Springwire
2.1.2 Oil-Tempered Springwire
2.1.3 Steel Sheet
2.1.4 Steel Shapes
2.1.5 Aluminum Extrusions
2.1.6 Aluminum Sheets and Strips
2.1.7 Glass
2.2 DOORS
2.3 DESIGN REQUIREMENTS
2.4 FABRICATION
2.4.1 Steel Overhead Doors
2.4.1.1 Insulated Sections
2.4.2 Tracks
2.4.3 Hardware
2.4.4 Counterbalancing
2.5 ELECTRIC OPERATORS
2.5.1 Operator Features
2.5.2 Motors
2.5.3 Controls
2.5.3.1 Indicator Lights
2.5.3.2 Remote operation
2.5.4 Safety Device
2.5.5 Control Transformers
2.5.6 Electrical Components
2.6 WEATHER SEALS AND SAFETY DEVICE
2.7 FINISHES
2.7.1 Galvanized and Shop Primed

PART 3 EXECUTION

3.1 INSTALLATION
3.2 ELECTRICAL WORK
3.3 TESTING

-- End of Section Table of Contents --

SECTION 08361

SECTIONAL OVERHEAD DOORS
08/01

PART 1 GENERAL

1.1 REFERENCES

The publications listed below form a part of this specification to the extent referenced. The publications are referred to in the text by the basic designation only.

AMERICAN SOCIETY FOR TESTING AND MATERIALS (ASTM)

ASTM A 36/A 36M	(1997; Rev. A) Carbon Structural Steel
ASTM A 123/A 123M	(1997; Rev. A) Zinc (Hot-Dip Galvanized) Coatings on Iron and Steel Products
ASTM A 227/A 227M	(1993) Steel Wire, Cold-Drawn for Mechanical Springs
ASTM A 229/A 229M	(1993) Steel Wire, Oil-Tempered for Mechanical Springs
ASTM A 653/A 653M	(1998) Steel Sheet, Zinc-Coated (Galvanized) or Zinc-Iron Alloy-Coated (Galvannealed) by the Hot-Dip Process
ASTM B 209	(1996) Aluminum and Aluminum-Alloy Sheet and Plate
ASTM B 221	(1996) Aluminum and Aluminum-Alloy Extruded Bars, Rods, Wire, Profiles, and Tubes
ASTM C 236	(1989; R 1993) Steady-State Thermal Performance of Building Assemblies by Means of a Guarded Hot Box
ASTM E 330	(1997) Structural Performance of Exterior Windows, Curtain Walls, and Doors by Uniform Static Air Pressure Difference

DOOR AND ACCESS SYSTEMS MANUFACTURERS ASSOCIATION (DASMA)

DASMA 102	(1988) Sectional Overhead Type Doors

NATIONAL ELECTRICAL MANUFACTURERS ASSOCIATION (NEMA)

NEMA ICS 1	(1993) Industrial Control and Systems
NEMA ICS 2	(1993) Industrial Control and Systems Controllers, Contactors and Overload

	Relays, Rated Not More Than 2000 Volts AC or 750 Volts DC
NEMA ICS 6	(1993) Industrial Control and Systems Enclosures
NEMA MG 1	(1993; Rev. 1-4) Motors and Generators
NEMA ST 20	(1992) Dry-Type Transformers for General Applications

NATIONAL FIRE PROTECTION ASSOCIATION (NFPA)

NFPA 70	(1999) National Electrical Code

1.2 SUBMITTALS

Submit the following in accordance with Section 01330, "Submittal Procedures."

SD-02 Shop Drawings

Doors; G, AE

Show types, sizes, locations, metal gages including minimum metal decimal thickness, hardware provisions, installation details, and other details of construction. For electrically-operated doors, include supporting brackets for motors, location, type, and ratings of motors, switches, and safety devices.

SD-03 Product Data

Doors; G, AE

Electric operators; G, AE

For electrically motor-operated doors, submit manufacturer's wiring diagrams for motor and controls.

SD-08 Manufacturer's Instructions

Doors

SD-10 Operation and Maintenance Data

Doors; G, AE

Submit Data Package 2 in accordance with Section 01781, "Operation and Maintenance Data."

1.3 DELIVERY, STORAGE, AND HANDLING

Protect doors and accessories from damage during delivery, storage, and handling. Clearly mark manufacturer's brand name. Store doors in dry locations with adequate ventilation, free from dust and water. Storage shall permit easy access for inspection and handling. Remove damaged items and provide new.

PART 2 PRODUCTS

2.1 MATERIALS

2.1.1 Hard-Drawn Springwire

ASTM A 227/A 227M.

2.1.2 Oil-Tempered Springwire

ASTM A 229/A 229M.

2.1.3 Steel Sheet

ASTM A 653/A 653M.

2.1.4 Steel Shapes

ASTM A 36/A 36M.

2.1.5 Aluminum Extrusions

ASTM B 221, Alloy 6063-T5.

2.1.6 Aluminum Sheets and Strips

ASTM B 209, alloy and temper best suited for the purpose.

2.1.7 Glass

Laminated glass 1/4 inch thick.

2.2 DOORS

DASMA 102. Commercial doors. Metal doors shall be horizontal sections hinged together which operate in a system of tracks to completely close the door opening in the closed position and make the full width and height of the door opening available for use in the open position. Provide a permanent label on the door indicating the name and address of the manufacturer. Doors shall be of the low headroom type designed to slide up and back into a horizontal overhead position and requiring a maximum of 10 inches of headroom for 2 inch tracks and 12 inches of headroom for 3 inch tracks. Doors shall be operated by electric power with auxiliary hand chain operation.

2.3 DESIGN REQUIREMENTS

DASMA 102 except that design wind load shall be 50 pounds per square foot. Doors shall remain operable and undamaged after conclusion of tests conducted in accordance with ASTM E 330 using the design wind load.

2.4 FABRICATION

2.4.1 Steel Overhead Doors

Form door sections of hot-dipped galvanized steel not lighter than 16 gage with flush surface without ribs or grooves 20 gage with longitudinal integral reinforcing ribs. Sections shall be not less than 2 inches in thickness. Meeting rails shall have interlocking joints to ensure a

weathertight closure and alignment for full width of the door. Sections shall be of the height indicated or the manufacturer's standard, except the height of an intermediate section shall not exceed 24 inches. Bottom sections may be varied to suit door height, but shall not exceed 30 inches in height. Provide glass panels as indicated. Install panels using rubber gaskets as standard with the door manufacturer.

2.4.1.1 Insulated Sections

Insulate door sections with fibrous glass or plastic foam to provide a "U" factor of 0.14 or less when tested in accordance with ASTM C 236. Cover interior of door sections with steel sheets of not lighter than 24 gage to completely enclose the insulating material.

2.4.2 Tracks

Provide galvanized steel tracks not lighter than 14 gage for 2 inch tracks and not lighter than 12 gage for 3 inch tracks. Provide vertical tracks with continuous steel angle not lighter than 13 gage for installation to walls. Incline vertical track through use of adjustable brackets to obtain a weathertight closure at jambs. Reinforce horizontal track with galvanized steel angle; support from track ceiling construction with galvanized steel angle and cross bracing to provide a rigid installation.

2.4.3 Hardware

Provide hinges, brackets, rollers, locking devices, and other hardware required for complete installation. Roller brackets and hinges shall be 14 gage galvanized steel. Rollers shall have ball bearings and case-hardened races. Provide reinforcing on doors where roller hinges are connected. Provide a positive locking device and cylinder lock with two keys on manually operated doors.

2.4.4 Counterbalancing

Counterbalance doors with an oil-tempered, helical-wound torsional spring mounted on a steel shaft. Spring tension shall be adjustable; connect spring to doors with cable through cable drums. Cable safety factor shall be at least 7 to 1.

2.5 ELECTRIC OPERATORS

2.5.1 Operator Features

Provide operators of the drawbar type or side mount (jack shaft) type as recommended by the manufacturer. Operators shall include electric motor, machine-cut reduction gears, steel chain and sprockets, magnetic brake, brackets, pushbutton controls, limit switches, magnetic reversing contactor, a manual chain hoist operator as specified above for emergency use, and other accessories necessary for operation. Design electric operator so motor may be removed without disturbing the limit switch timing and without affecting the manual operator. Provide the operator with slipping clutch coupling to prevent stalling the motor. The emergency manual operator shall be clutch controlled so that it may be engaged and disengaged from the floor; operation shall not affect limit switch timing. The manual operator is not required if door can be manual-pushup operated with a force not to exceed 25 pounds. Provide an electrical or mechanical device that disconnects the motor from the operating mechanism when the manual operator is engaged.

2.5.2 Motors

NEMA MG 1, high-starting torque, reversible type with sufficient horsepower and torque output to move the door in either direction from any position. Motor shall produce a door travel speed of not less than two-thirds foot or more than one foot per second without exceeding the rated capacity. Motors shall be operate on current of the characteristics indicated at not more than 3600 rpm. Single-phase motors shall not have commutation or more than one starting contact. Motor enclosures shall be drip-proof type or NEMA TENV type.

2.5.3 Controls

Each door motor shall have an enclosed, across-the-line type, magnetic reversing contactor, thermal overload and undervoltage protection, solenoid-operated brake, limit switches, and control switches. Locate control switches at least 5 feet above the floor so the operator will have complete visibility of the door at all times. Control equipment shall conform to NEMA ICS 1 and NEMA ICS 2. Control enclosures shall be NEMA ICS 6, Type 12 or Type 4, except that contactor enclosures may be Type 1. Each control switch station shall be of the three-button type with buttons marked "OPEN," "CLOSE," and "STOP." The "OPEN" and "STOP" buttons shall require only momentary pressure to operate. The "CLOSE" button shall require constant pressure to maintain the closing motion of the door. If the door is in motion and the "STOP" button is pressed or the "CLOSE" button released, the door shall stop instantly and remain in the stop position; from the stop position, the door may be operated in either direction by the "OPEN" or "CLOSE" button. Pushbuttons shall be full-guarded to prevent accidental operation. Provide limit switches to automatically stop doors at the fully open and closed positions. Limit switch positions shall be readily adjustable.

2.5.3.1 Indicator Lights

Each door from each apparatus bay shall have red and green indicator lights mounted on the left jamb (exiting) of the door opening so that they are easily seen from the driver, position of the vehicle housed in that bay. The lights shall show red except when the door is fully open, at which time the green light shall be on and remain on until the door begins to close.

2.5.3.2 Remote operation

Provide a set of control switches for each door, with indicator lights at the switcbes, in the control room where indicated. The controls shall activate individual doors, and provide a status indication for each door. Each set of switches shall be labeled to indicate the door affected.

2.5.4 Safety Device

Provide a pneumatic or electric type safety device on the bottom edge of electrically-operated doors. The device shall immediately stop and reverse the door movement during the closing travel upon contact with an obstruction in the door opening or upon failure of any component of the control system. The door-closing circuit shall be automatically locked out and the door shall be operable manually until the failure or damage has been corrected. Do not use the safety device as a limit switch.

2.5.5 Control Transformers

NEMA ST 20. Provide transformers in power circuits as necessary to reduce the voltage on the control circuits to 120 volts or less.

2.5.6 Electrical Components

NFPA 70. Furnish manual or automatic control and safety devices, including extra flexible Type SO cable and spring-loaded automatic takeup reel or equivalent device, as required for operation of the doors. Conduit, wiring, and mounting of controls are specified in Section 16415A ELECTRICAL WORK, INTERIOR

2.6 WEATHER SEALS AND SAFETY DEVICE

Provide exterior doors with weatherproof joints between sections by means of tongue-and-groove joints, rabbetted joints, shiplap joints, or wool pile, vinyl or rubber weatherstripping; a rubber, wool pile, or vinyl, adjustable weatherstrip at the top and jambs; and a compressible neoprene, rubber, wool pile, or vinyl weather seal attached to the bottom of the door. On exterior doors that are electrically operated, the bottom seal shall be combination compressible weather seal and safety device for stopping and reversing door movement.

2.7 FINISHES

Concealed ferrous metal surfaces and tracks shall be hot-dip galvanized. Other ferrous metal surfaces, except rollers and lock components, shall be hot-dip galvanized and shop primed.

2.7.1 Galvanized and Shop Primed

Surfaces specified shall have a zinc coating, a phosphate treatment, and a shop prime coat of rust-inhibitive paint. The galvanized coating shall conform to ASTM A 653/A 653M, coating designation G60, for steel sheets, and ASTM A 123/A 123M for assembled steel products. The weight of coatings for assembled products shall be as designated in Table I of ASTM A 123/A 123M for the class of material to be coated. The prime coat shall be a type especially developed for materials treated by phosphates and adapted to application by dipping or spraying. Repair damaged zinc-coated surfaces with galvanizing repair paint and spot prime. At the Contractor's option, a two-part system including bonderizing, baked-on epoxy primer, and baked-on enamel topcoat may be applied in lieu of prime coat specified.

PART 3 EXECUTION

3.1 INSTALLATION

NFPA 70. Install doors in accordance with approved shop drawings and manufacturer's instructions. Upon completion, doors shall be weathertight and free from warp, twist, or distortion. Lubricate and adjust doors to operate freely.

3.2 ELECTRICAL WORK

NFPA 70. Conduit, wiring, and mounting of controls are specified in Section 16415A ELECTRICAL WORK, INTERIOR.

3.3 TESTING

After installation is complete, operate doors to demonstrate installation and function of operators, safety features, and controls. Correct deficiencies.

-- End of Section --

SECTION TABLE OF CONTENTS

DIVISION 08 - DOORS AND WINDOWS

SECTION 08520A

ALUMINUM AND ENVIRONMENTAL CONTROL ALUMINUM WINDOWS

10/03

PART 1 GENERAL

1.1 REFERENCES
1.2 WINDOW PERFORMANCE
1.2.1 Structural Performance
1.2.1.1 Anti-terrorism/Force Protection Requirements
1.2.2 Air Infiltration
1.2.3 Water Penetration
1.2.4 Thermal Performance
1.2.5 Condensation Index Rating
1.3 SUBMITTALS
1.4 QUALIFICATION
1.5 DELIVERY AND STORAGE
1.6 WARRANTY

PART 2 PRODUCTS

2.1 ALUMINUM WINDOW TYPES
2.1.1 Awning/Hopper/Projected Windows
2.2 WEATHERSTRIPPING
2.3 INSECT SCREENS
2.4 ACCESSORIES
2.4.1 Fasteners
2.4.2 Hardware
2.4.3 Window Anchors
2.5 GLASS AND GLAZING
2.6 FINISH
2.6.1 Anodized Aluminum Finish
2.6.2 High-Performance Coating
2.6.3 Color

PART 3 EXECUTION

3.1 INSTALLATION
3.2 ADJUSTMENTS AND CLEANING
3.2.1 Hardware Adjustments
3.2.2 Cleaning

-- End of Section Table of Contents --

UFGS-08520A (October 2003)

SECTION 08520A

ALUMINUM AND ENVIRONMENTAL CONTROL ALUMINUM WINDOWS
10/03

PART 1 GENERAL

1.1 REFERENCES

The publications listed below form a part of this specification to the extent referenced. The publications are referred to in the text by basic designation only.

ALUMINUM ASSOCIATION (AA)

AA DAF-45	(1997) Designation System for Aluminum Finishes

AMERICAN ARCHITECTURAL MANUFACTURERS ASSOCIATION (AAMA)

AAMA 101	(1997) Voluntary Specifications for Aluminum, Vinyl (PVC) and Wood Windows and Glass Doors
AAMA 2604	(2002) Voluntary Specification, Performance Requirements and Test Procedures for High Performance Organic Coatings on Aluminum Extrusions and Panels

AMERICAN SOCIETY FOR TESTING AND MATERIALS (ASTM)

ASTM E 283	(1991) Determining the Rate of Air Leakage Through Exterior Windows, Curtain Walls, and Doors Under Specified Pressure Differences Across the Specimen
ASTM E 330	(1997el) Structural Performance of Exterior Windows, Curtain Walls, and Doors by Uniform Static Air Pressure Difference
ASTM E 547	(1996) Water Penetration of Exterior Windows, Curtain Walls, and Doors by Cyclic Static Air Pressure Differential

INSECT SCREENING WEAVERS ASSOCIATION (ISWA)

ISWA IWS 089	(1990) Recommended Standards and Specifications for Insect Wire Screening (Wire Fabric)

NATIONAL FENESTRATION RATING COUNCIL (NFRC)

NFRC 100	(1997) Procedure for Determing Fenestration Product U-factors
NFRC 200	(1997) Procedure for Determining Fenestration Product Solar Heat Gain Coefficients at Normal Incidence

*2

UNIFIED FACILITIES CRITERIA (UFC)

UFC 4-010-01	(8 Oct 2003) Unified Facilities Criteria (UFC) DoD Minimum Anti-Terrorism Standards for Buildings

1.2 WINDOW PERFORMANCE

Aluminum windows shall meet the following performance requirements. Testing requirements shall be performed by an independent testing laboratory or agency.

1.2.1 Structural Performance

Structural test pressures on window units shall be for positive load (inward) and negative load (outward) in accordance with ASTM E 330. After testing, there shall be no glass breakage, permanent damage to fasteners, hardware parts, support arms or actuating mechanisms or any other damage which could cause window to be inoperable. There shall be no permanent deformation of any main frame, sash or ventilator member in excess of the requirements established by AAMA 101 for the window types and classification specified in this section.

*2

1.2.1.1 Anti-terrorism/Force Protection Requirements

In addition to the requirements specified above, structural performance of windows shall meet the requirements of UFC 4-010-01.

1.2.2 Air Infiltration

Air infiltration shall not exceed the amount established by AAMA 101 for each window type when tested in accordance with ASTM E 283.

1.2.3 Water Penetration

Water penetration shall not exceed the amount established by AAMA 101 for each window type when tested in accordance with ASTM E 547.

1.2.4 Thermal Performance

Thermal transmittance for thermally broken aluminum windows with insulating glass shall not exceed a U-factor of .0.40 Btu/hr-ft^2-F determined according to NFRC 100, and a solar heat gain coefficient (SHGC) of0.55 Btu/hr-ft^2-F determined according to NFRC 200. Window units shall comply with the U.S. Department of Energy, Energy Star Window Program for the Central Climate Zone..

1.2.5 Condensation Index Rating

The condensation index rating shall be 85 as determined using NFRC approved software THERM.

1.3 SUBMITTALS

Government approval is required for submittals with a "G" designation; submittals not having a "G" designation are for information only. When used, a designation following the "G" designation identifies the office that will review the submittal for the Government. The following shall be submitted in accordance with Section 01330 SUBMITTAL PROCEDURES:

SD-02 Shop Drawings

Aluminum Windows
Insect Screens

Drawings indicating elevations of window, rough-opening dimensions for each type and size of window, full-size sections, thicknesses of metal, fastenings, methods of installation and anchorage, connections with other work, type of wall construction, size and spacing of anchors, method of glazing, types and locations of operating hardware, mullion details, weatherstripping details, screen details including method of attachment,, and window schedules showing locations of each window type.

SD-03 Product Data

Aluminum Windows

Manufacturer's descriptive data and catalog cut sheets.

Manufacturer's preprinted installation instructions and cleaning instructions.

SD-06 Test Reports

Aluminum Windows

Reports for each type of aluminum window attesting that identical windows have been tested and meet all performance requirements established under paragraph WINDOW PERFORMANCE.

SD-07 Certificates

Aluminum Windows

Certificates stating that the aluminum windows are AAMA certified conforming to requirements of this section. Labels or markings permanently affixed to the window will be accepted in lieu of certificates. Product ratings determined using NFRC 100 and NFRC 200 shall be authorized for certification and properly labeled by the manufacturer.

1.4 QUALIFICATION

Window manufacturer shall specialize in designing and manufacturing the type of aluminum windows specified in this section, and shall have a

minimum of 5 years of documented successful experience. Manufacturer shall have the facilities capable of meeting contract requirements, single-source responsibility and warranty.

1.5 DELIVERY AND STORAGE

Aluminum windows shall be delivered to project site and stored in accordance with manufacturer's recommendations. Damaged windows shall be replaced with new windows.

1.6 WARRANTY

Manufacturer's standard performance guarantees or warranties that extend beyond a 1 year period shall be provided.

PART 2 PRODUCTS

2.1 ALUMINUM WINDOW TYPES

Aluminum windows, as part of storefront system shall consist of complete units including sash, glass, frame, weatherstripping, and hardware. Windows shall conform to AAMA 101. Windows shall be thermal break type double-glazed. Thermal barrier shall be neoprene, rigid vinyl, or polyurethane and shall be resistant to weather. Window members shall be heli-arc welded or angle-reinforced and mechanically joined and sealed. Exposed welded joints shall be dressed and finished. Joints shall be permanent and weathertight. Frames shall be constructed to provide a minimum 1/4 inch thermal break between the exterior and interior frame surfaces. Sash corners shall be internally sealed to prevent air and water leaks.

2.1.1 Awning/Hopper/Projected Windows

Aluminum awning (A),hopper and projected windows shall conform to AAMA 101 Designation AP-HC145 type consisting of hinged ventilators arranged in a single or vertical series within a common frame. Ventilators shall be operated by a device which shall securely close the ventilator at both jambs without the use of additional manually-controlled locking device. Operating hardware, except ventilator arms and rotary operators, shall be concealed within frame and sill. Ventilator arms shall be concealed when windows are closed.

2.2 WEATHERSTRIPPING

Weatherstripping for ventilating sections shall be of type designed to meet water penetration and air infiltration requirements specified in this section in accordance with AAMA 101, and shall be manufactured of material compatible with aluminum and resistant to weather. Weatherstrips shall be factory-applied and easily replaced in the field. Neoprene or polyvinylchloride weatherstripping are not acceptable where exposed to direct sunlight.

2.3 INSECT SCREENS

Insect screens shall be aluminum window manufacturer's standard design, and shall be provided where scheduled on drawings. Insect screens shall be fabricated of roll-formed tubular-shaped aluminum mesh screening conforming with ISWA IWS 089, Type III .

2.4 ACCESSORIES

2.4.1 Fasteners

Fastening devices shall be window manufacturer's standard design made from aluminum, non-magnetic stainless steel, cadmium-plated steel, nickel/chrome-plated steel in compliance with AAMA 101. Self-tapping sheet metal screws will not be acceptable for material thicker than 1/16 inch.

2.4.2 Hardware

Hardware shall be as specified for each window type and shall be fabricated of aluminum, stainless steel, cadmium-plated steel, zinc-plated steel or nickel/chrome-plated steel in accordance with requirements established by AAMA 101. Fastener size and spacing shall be sufficient to retain the window frame in place under a blast load of 144 psf.

2.4.3 Window Anchors

Anchoring devices for installing windows shall be made of aluminum, cadmium-plated steel, stainless steel, or zinc-plated steel conforming to AAMA 101.

2.5 GLASS AND GLAZING

Aluminum windows shall be designed for inside glazing, field glazing, and for glass types scheduled on drawings and specified in Section 08810 GLASS AND GLAZING. Units shall be complete with glass and glazing provisions to meet AAMA 101. Glazing material shall be compatible with aluminum, and shall not require painting.

2.6 FINISH

2.6.1 Anodized Aluminum Finish

Exposed surfaces of aluminum windows shall be finished with anodic coating conforming to AA DAF-45: Architectural Class I, AA-M10-C22-A44, color anodic coating, 0.7 mil or thicker. Finish shall be free of scratches and other blemishes.

2.6.2 High-Performance Coating

Exposed surfaces of aluminum windows shall be finished with a two-coat fluoropolymer coating system containing at least 70 percent by weight polyvinylidene fluoride, PVF2 resin, factory-applied, oven-baked, conforming to AAMA 2604, with a primer coat of 0.20 to 0.30 mils and a color coat of minimum 1.0 mil, total dry film thickness of 1.20 to 1.3 mils. Finish shall be free of scratches and other blemishes.

2.6.3 Color

Color shall be as indicated on the drawings. Color listed is not intended to limit the selection of equal colors from other manufacturers..

PART 3 EXECUTION

3.1 INSTALLATION

Aluminum windows shall be installed in accordance with approved shop drawings and manufacturer's published instructions. Aluminum surfaces in contact with masonry, concrete, wood and dissimilar metals other than stainless steel, zinc, cadmium or small areas of white bronze, shall be protected from direct contact using protective materials recommended by AAMA 101. The completed window installation shall be watertight in accordance with Section 07900A JOINT SEALING. Glass and glazing shall be installed in accordance with requirements of this section and Section 08810A GLASS AND GLAZING.

3.2 ADJUSTMENTS AND CLEANING

3.2.1 Hardware Adjustments

Final operating adjustments shall be made after glazing work is complete. Operating sash or ventilators shall operate smoothly and shall be weathertight when in locked position.

3.2.2 Cleaning

Aluminum window finish and glass shall be cleaned on exterior and interior sides in accordance with window manufacturer's recommendations. Alkaline or abrasive agents shall not be used. Precautions shall be taken to avoid scratching or marring window finish and glass surfaces.

-- End of Section --

SECTION TABLE OF CONTENTS

DIVISION 08 - DOORS AND WINDOWS

SECTION 08633

FIBERGLASS-SANDWICH-PANEL SYSTEMS

04/02

PART # GENERAL

1.1 REFERENCES
1.2 PERFORMANCE REQUIREMENTS
1.2.1 Supporting-Frame-Member Deflection Limits
1.2.2 Structural Loads
1.2.3 Thermal Movement
1.2.3.1 Temperature Change (Range)
1.2.4 Air Infiltration
1.2.5 Water Penetration
1.3 SUBMITTALS
1.4 QUALITY ASSURANCE
1.4.1 Installer Qualifications
1.4.1.1 Engineering Responsibility
1.4.2 Professional Engineer Qualifications
1.4.3 Testing Agency Qualifications
1.4.4 Product Options
1.4.5 Sandwich-Panel Fire-Test-Response Characteristics
1.4.6 Mockups
1.5 PROJECT CONDITIONS
1.5.1 Field Measurements
1.5.1.1 Established Dimensions
1.6 WARRANTY
1.6.1 General Warranty

PART 2 PRODUCTS

2.1 MATERIALS AND PRODUCTS
2.1.1 Aluminum
2.1.1.1 Sheet and Plate
2.1.1.2 Bars, Rods, and Wire
2.1.2 Battens, Brackets, and Reinforcements
2.1.3 Exposed Flashing and Closures
2.1.4 Fasteners and Accessories
2.1.5 Panel System Gaskets and Joint Fillers
2.1.6 Panel System Sealants
2.1.7 Bituminous Paint
2.1.8 Thermal Insulation
2.1.9 Fiberglass Sandwich Panels
2.1.9.1 Erosion Protection
2.1.9.2 U-Value
2.1.9.3 Grid Core
2.1.9.4 Grid Pattern
2.1.9.5 Adhesive
2.1.9.6 Impact Resistance
2.1.9.7 Color Stability
2.1.9.8 Color
2.2 FABRICATION

2.2.1 Aluminum Components
2.2.2 Flashing
2.2.3 Preparation
2.2.3 Fiberglass-Sandwich-Panel Fabrication
2.3 ALUMINUM FINISHES
2.3.1 Class I, Clear Anodic Finish

PART 3 EXECUTION

3.1 PREPARATION
3.1.1 Metal Protection
3.2 INSTALLATION
3.2.1 Erection Tolerances
3.2.2 Sealants
3.3 FIELD QUALITY CONTROL
3.3.1 Water-Spray Test
3.3.2 Correction
3.4 CLEANING

-- End of Section Table of Contents --

SECTION 08633

FIBERGLASS-SANDWICH-PANEL SYSTEMS
04/02

PART # GENERAL

1.1 REFERENCES

The publications listed below form a part of this specification to the extent referenced. The publications are referred to in the text by basic designation only.

AMERICAN ARCHITECTURAL MANUFACTURERS ASSOCIATION (AAMA)

AAMA 501.2	(1994) Field Check of Metal Storefronts, Curtain Walls, and Sloped Glazing Systems for Water Leakage
AAMA 607.1	(1977) Voluntary Guide Specification and Inspection Methods for Clear Anodic Finishes for Architectural Aluminum

AMERICAN SOCIETY FOR TESTING AND MATERIALS (ASTM)

ASTM A 123	(1989a) Zinc (Hot-Dip Galvanized) Coatings on Iron and Steel Products
ASTM A 193/A 193M	(1996b) Alloy-Steel and Stainless Steel Bolting Materials for High-Temperature Service
ASTM A 307	(1994) Carbon Steel Bolts and Studs, 60,000 PSI Tensile Strength
ASTM B 209M	(1995) Aluminum and Aluminum-Alloy Sheet and Plate (Metric)
ASTM B 211M	(1995a) Aluminum and Aluminum-Alloy Bar, Rod, and Wire (Metric)
ASTM B 221M	(2000) Aluminum and Aluminum-Alloy Extruded Bars, Rods, Wire, Profiles, and Tubes (Metric)
ASTM C 297	(1994) Flatwise Tensile Strength of Sandwich Constructions
ASTM D 635	(1998) Rate of Burning and/or Extent and Time of Burning of Self-Supporting Plastics in a Horizontal Position
ASTM D 1037	(1999) Evaluating Properties of Wood-Base Fiber and Particle Panel Materials
ASTM D 1183	(1996el) Resistance of Adhesives to Cyclic

	Laboratory Aging Conditions
ASTM D 1929	(1996; R 2001) Determining Ignition Temperature of Plastics
ASTM D 2244	(1995) Calculation of Color Differences from Instrumentally Measured Color Coordinates
ASTM E 84	(2000a) Surface Burning Characteristics of Building Materials
ASTM E 283	(1991) Determining the Rate of Air Leakage Through Exterior Windows, Curtain Walls, and Doors Under Specified Pressure Differences Across the Specimen
ASTM E 331	(1996) Water Penetration of Exterior Windows, Curtain Walls, and Doors by Uniform Static Air Pressure Difference
ASTM E 548	(1994el) Guide for General Criteria Used for Evaluating Laboratory Competence

NATIONAL ASSOCIATION OF ARCHITECTURAL METAL MANUFACTURERS (NAAMM)

NAAMM AMP 500	8) Metal Finishes Manual for Architectural and Metal Products

THE SOCIETY FOR PROTECTIVE COATINGS (SSPC)

SSPC-Paint 12	(1991) Cold-Applied Asphalt Mastic (Extra Thick Film)

1.2 PERFORMANCE REQUIREMENTS

Provide panel systems capable of withstanding loads and thermal and structural movements indicated without failure.

Failure includes the following:

1. Supporting-frame deflection exceeding specified limits.
2. Sandwich-panel deflection exceeding manufacturer's recommended limits or causing panel failure.
3. Thermal stresses transferred to the building structure.
4. Noise or vibration created by thermal and structural movement and wind.
5. Loosening or weakening of fasteners, attachments, and other components.
6. Sealant failure.

1.2.1 Supporting-Frame-Member Deflection Limits

As follows:

1. Deflection of the entire length of framing members in direction normal to panel system plane is limited to <Insert limit; e.g.,

1/180>, unless otherwise indicated.
2. Deflection of the entire length of framing members for spans exceeding 6 m is limited to 1/240 of clear span.

1.2.2 Structural Loads

Provide panel systems, including anchorage, capable of withstanding the effects of the following design loads when supporting full dead loads:

1. Wind Loads: As indicated
2. Seismic Loads: As indicated.

1.2.3 Thermal Movement

Provide panel systems that allow for thermal movement resulting from the following maximum change (range) in ambient and surface temperatures by preventing buckling, sealant failure, and other detrimental effects.

1.2.3.1 Temperature Change (Range)

67 deg C ambient, 100 deg C material surfaces.

1.2.4 Air Infiltration

Provide panel systems with maximum air leakage of 0.03 L/s per sq. m of surface when tested according to ASTM E 283 at a minimum static-air-pressure differential of 75.2 Pa.

1.2.5 Water Penetration

Provide panel systems that do not evidence water penetration when tested according to ASTM E 331 at a minimum static pressure differential of 20 percent of positive design wind load, but not less than 299 Pa.

1.3 SUBMITTALS

Government approval is required for submittals with a "G" designation; submittals not having a "G" designation are for information only. When used, a designation following the "G" designation identifies the office that will review the submittal for the Government. The following shall be submitted in accordance with Section 01330 SUBMITTAL PROCEDURES:

SD-02 Shop Drawings

Panel Systems; G, AE.

Show plans, elevations, sections, details, and attachments to other Work. Include structural analysis data signed and sealed by the qualified professional engineer responsible for their preparation.

SD-03 Product Data

Panel Systems;G, AE

Manufacturer's descriptive data and catalog cuts including air-infiltration data.Include construction details, material descriptions, dimensions, profiles, and finishes of panel system

components.

Installation;G, AE

Cleaning;G, AE

Manufacturer's installation instructions and cleaning instructions.

SD-04 Samples

Finishes;G, RO

For each exposed finish required, in same thickness and material indicated for the Work and in size indicated below. If finishes involve normal color variations, include sample sets consisting of two or more units showing the full range of variations expected.

1. Factory-Finished Aluminum: 300-mm- long sections.
2. Fiberglass Sandwich Panels: 300-mm- square units.

Cutaway Sample;G, RO

Cutaway Sample: Of framing intersection, made from 300-mm- long lengths of full-size components and showing details of primary framing members. joinery, expansion provisions. fiberglass sandwich panels, and methods of drainage.

SD-06 Test Reports

Panel Systems

Certified test reports from an independent testing laboratory, stating that panel system assemblies are identical in design, materials, and construction to assemblies that have been tested and meets all test and specified requirements.

1.4 QUALITY ASSURANCE

1.4.1 Installer Qualifications

An experienced installer to assume engineering responsibility who has specialized in installing panel systems similar to those indicated for this Project and who is acceptable to manufacturer.

1.4.1.1 Engineering Responsibility

Preparation of Shop Drawings and comprehensive engineering analysis by a qualified professional engineer.

1.4.2 Professional Engineer Qualifications

A professional engineer who is legally qualified to practice in jurisdiction where Project is located and who is experienced in providing engineering services of the kind indicated. Engineering services are defined as those performed for installations of panel systems that are similar to those indicated for this Project in material, design, and extent.

1.4.3 Testing Agency Qualifications

An independent testing agency with the experience and capability to conduct the testing indicated, as documented according to ASTM E 548.

1.4.4 Product Options

Information on Drawings and in Specifications establishes requirements for aesthetic effects and performance characteristics of panel systems. Aesthetic effects are indicated by dimensions, arrangements, alignment, and profiles of components and assemblies as they relate to sightlines, to one another, and to adjoining construction. Performance characteristics are indicated by criteria subject to verification by one or more methods including testing or in-service performance.

1.4.5 Sandwich-Panel Fire-Test-Response Characteristics

Provide fiberglass sandwich panels identical to those tested for the following fire-test-response characteristics per test method indicated below by an independent testing and inspecting agency acceptable to Contracting Officer.

1. Plastic Self-Ignition Temperature: 343 deg C or more when tested per ASTM D 1929.
2. Interior-Face Burning Extent: 25 mm or less per ASTM D 635.
3. Interior-Face Surface Burning: Flame-spread and smoke-developed ratings of not more than 25 and 450, respectively, per ASTM E 84.

1.4.6 Mockups

Before installing panel systems, build mockups for each form of construction and finish required to verify selections made under sample Submittals and to demonstrate aesthetic effects and qualities of materials and execution. Build mockups to comply with the following requirements, using materials indicated for the completed Work:

1. Build mockups in the location and of the size indicated or, if not indicated, as directed by Contracting Officer.
2. Notify Contracting Officer seven days in advance of dates and times when mockups will be constructed.
3. Demonstrate the proposed range of aesthetic effects and workmanship.
4. Obtain Contracting Officer's's approval of mockups before starting fabrication.
5. Maintain mockups during construction in an undisturbed condition as a standard for judging the completed Work.
6. Demolish and remove mockups when directed.
7. Approved mockups may become part of the completed Work if undisturbed at time of Substantial Completion.

1.5 PROJECT CONDITIONS

1.5.1 Field Measurements

Where panel systems are indicated to fit to other construction, verify dimensions of other construction by field measurements before fabrication and indicate measurements on Shop Drawings. Coordinate fabrication schedule with construction progress to avoid delaying the Work.

1.5.1.1 Established Dimensions

Where field measurements cannot be made without delaying the Work, establish dimensions and proceed with fabricating panel systems without field measurements. Coordinate construction to ensure that actual dimensions correspond to established dimensions.

1.6 WARRANTY

1.6.1 General Warranty

Special warranty specified in this Article shall not deprive Owner of other rights Owner may have under other provisions of the Contract Documents and shall be in addition to, and run concurrent with, other warranties made by Contractor under requirements of the Contract Documents.

B. Special Warranty: Written warranty, executed by manufacturer agreeing to repair or replace components of panel systems that fail in materials or workmanship within specified warranty period. Failures include, but are not limited to, the following:

1. Structural failures.
2. Deterioration of metals, metal finishes, fiberglass sandwich panels, and other materials beyond normal weathering.
3. Water leakage, defined as uncontrolled water appearing on normally exposed interior surfaces of panel systems from sources other than condensation. Water controlled by flashing and gutters and drained back to the exterior and that cannot damage adjacent materials or finishes is not water leakage.
4. Warranty Period: Five years from date of Substantial Completion.

PART 2 PRODUCTS

2.1 MATERIALS AND PRODUCTS

2.1.1 Aluminum

Alloy and temper recommended by manufacturer for use and finish indicated, and as follows:1. Extrusions: ASTM B 221M.

2.1.1.1 Sheet and Plate

ASTM B 209M.

2.1.1.2 Bars, Rods, and Wire

ASTM B 211M.

2.1.2 Battens, Brackets, and Reinforcements

Manufacturer's standard high-strength aluminum units.

2.1.3 Exposed Flashing and Closures

Aluminum sheet, minimum 1.5 mm thick.

2.1.4 Fasteners and Accessories

Manufacturer's standard corrosion-resistant, nonstaining, nonbleeding fasteners and accessories; compatible with adjacent materials.

1. Movement Joints: Provide slip-joint linings, spacers, and sleeves of material and type recommended by manufacturer.
2. Aluminum-Retaining-Cap or Batten Fasteners: ASTM A 193/A 193M, Series 300 stainless-steel screws; type as recommended by manufacturer.
3. Connections to Supporting Structure: ASTM A 307, zinc-coated steel fasteners.
4. Anchor Bolts: ASTM A 307, Grade A, zinc-coated steel anchor bolts.
5. Concrete or Masonry Inserts: Zinc-coated cast-iron, malleable-iron, or steel inserts; hot-dip galvanized according to ASTM A 123.
6. Shims: Nonstaining, nonferrous shims compatible with adjacent materials, for installing and aligning panel system.

2.1.5 Panel System Gaskets and Joint Fillers

Manufacturer's standard permanent gaskets and joint fillers for sliding, compression, and nonmoving joints.

2.1.6 Panel System Sealants

Compatible with components with which sealants come in contact and recommended by panel system and sealant manufacturers for this use.

2.1.7 Bituminous Paint

Cold-applied asphalt mastic paint complying with SSPC-Paint 12, except containing no asbestos, and formulated for 0.8-mm thickness per coat.

2.1.8 Thermal Insulation

Manufacturer's standard glass fiber batt, as required to achieve the specified thermal performance.

2.1.9 Fiberglass Sandwich Panels

70 mm thick with uniformly colored, translucent, fiberglass-reinforced-polymer face sheets permanently attached to a grid core using adhesive.

2.1.9.1 Erosion Protection

Manufacturer's standard.

2.1.9.2 U-Value

1.647

2.1.9.3 Grid Core

Aluminum I-beams complying with ASTM B 221M and in alloy and temper recommended by manufacturer.

2.1.9.4 Grid Pattern

As indicated.

2.1.9.5 Adhesive

Waterproof, heat-and-pressure-resin type with tensile bond strength 5.2 MN/sq. m when tested according to ASTM C 297 after aging according to ASTM D 1037, and shear bond strength of 4.8 MN/sq. m when tested according to ASTM D 1002 after aging according to ASTM D 1183.

2.1.9.6 Impact Resistance

No failure at impact of 312 J according to free-falling ball impact test using a 88.9-mm- diameter, 2.9-kg ball.

2.1.9.7 Color Stability

Not more than 3.0 units Delta E after 60 months when tested according to ASTM D 2244.

2.1.9.8 Color

As indicated.

2.2 FABRICATION

2.2.1 Aluminum Components

Fabricate components that, when assembled, will have accurately fitted joints with ends coped, mitered, or butted to produce hairline joints free of burrs and distortion. Fabricate components to drain water passing joints and to drain condensation and moisture occurring or migrating within panel system system to the exterior. Fabricate components to accommodate expansion, contraction, and field adjustment and to provide for minimum clearance and shimming at panel system perimeter. Form shapes with sharp profiles, straight and free of defects or deformations, before finishing Fit and assemble components to greatest extent practicable before finishing. Reinforce members as required to retain fastener threads. Where fasteners are exposed to view from interior, countersink fastener heads and finish them to match framing. Before shipping, shop assemble, mark, and disassemble components that cannot be permanently shop assembled.

2.2.2 Flashing

Fabricate flashing with weatherproof expansion joints and corners.

2.2.3 Preparation

Prepare framing to receive anchor and connection devices and fasteners.

2.2.3 Fiberglass-Sandwich-Panel Fabrication

Laminate face sheets to grid core under a controlled heat-and-pressure process with straight adhesive bonding lines that cover the width of core members and that have sharp edges. White spots indicating lack of bond at intersections of grid core members are limited in number to 4 for every 3.7 sq. m of panel and limited in diameter to 1.2 mm. Fabricate with grid pattern that is symmetrical about centerlines of each panel.

4. Fabricate panel to allow condensation within the panel to escape. Reinforce panel corners.

2.3 ALUMINUM FINISHES

Comply with NAAMM AMP 500 for recommendations for applying and designating finishes.

Finish designations prefixed by AA comply with the system established by the Aluminum Association for designating aluminum finishes.

2.3.1 Class I, Clear Anodic Finish

AA-M10C22A41 (Mechanical Finish: as fabricated; Chemical Finish: etched, medium matte; Anodic Coating: Architectural Class I, clear coating 0.018 mm or thicker) complying with AAMA 607.1.

PART 3 EXECUTION

3.1 PREPARATION

Furnish anchor bolts and inserts for setting in concrete formwork or masonry indicated to support panel systems.

3.1.1 Metal Protection

Where aluminum will contact dissimilar metals, protect against galvanic action by painting contact surfaces with primer or by applying sealant or tape recommended by manufacturer for this purpose. Where aluminum will contact concrete or masonry, protect against corrosion by painting contact surfaces with bituminous paint. Where aluminum will contact pressure-treated wood, separate dissimilar materials by methods recommended by manufacturer.

3.2 INSTALLATION

Comply with manufacturer's written instructions for protecting, handling, and installing panel system components. Fit aluminum component joints to produce hairline joints free of burrs and distortion. Rigidly secure nonmovement joints. Accommodate thermal and mechanical movements. Install framing components to drain water passing joints and to drain condensation and moisture occurring or migrating within panel system system to the exterior. Coordinate installation of insulation and flashings at panel system perimeters to maintain continuity of thermal and water barriers. Set continuous flashings in a full sealant bed, unless otherwise indicated.

3.2.1 Erection Tolerances

Install panel system components true in plane, accurately aligned, and without warp or rack. Adjust to comply with the following tolerances:

1. Variation from Plane: Limit variation from plane or location shown to 3 mm in 3 m; 6 mm over total length.

2. Alignment: Where surfaces abut in line and at corners and where surfaces are separated by less than 76 mm, limit offset from true alignment to less than 0.8 mm; otherwise, limit offset from true alignment to 3.2 mm.

3.2.2 Sealants

Install sealants according to sealant manufacturer's written instructions to provide weatherproof joints. Install joint fillers behind sealant as recommended by sealant manufacturer.

3.3 FIELD QUALITY CONTROL

3.3.1 Water-Spray Test

Test panel systems according to procedures in AAMA 501.2.

3.3.2 Correction

Repair or replace Work that does not pass testing or that is damaged by testing; and retest Work.

3.4 CLEANING

Clean panel systems inside and outside, immediately after installation, according to manufacturer's written recommendations. Remove temporary protective coverings and strippable coatings from factory-finished metal surfaces and fiberglass sandwich panels. Remove labels and markings from all components.

-- End of Section --

SECTION TABLE OF CONTENTS

DIVISION 08 - DOORS AND WINDOWS

SECTION 08710

DOOR HARDWARE

02/02

PART 1 GENERAL

1.1 REFERENCES
1.2 SUBMITTALS
1.3 HARDWARE SCHEDULE
1.4 KEY BITTING CHART REQUIREMENTS
1.5 QUALITY ASSURANCE
1.5.1 Hardware Manufacturers and Modifications
1.6 DELIVERY, STORAGE, AND HANDLING

PART 2 PRODUCTS

2.1 TEMPLATE HARDWARE
2.2 HARDWARE FOR FIRE DOORS AND EXIT DOORS
2.3 HARDWARE ITEMS
2.3.1 Hinges
2.3.2 Omitted
2.3.3 Omitted
2.3.4 Locks and Latches
2.3.4.1 Omitted
2.3.4.2 Bored Locks and Latches
2.3.5 Omitted
2.3.6 Omitted
2.3.7 Cylinders and Cores
2.3.8 Keying System
2.3.9 Lock Trim
2.3.9.1 Knobs and Roses
2.3.9.2 Lever Handles
2.3.9.3 Texture
2.3.10 Keys
2.3.11 Card Reader Access Controls
2.3.12 Closers
2.3.12.1 Identification Marking
2.3.13 Closer Holder-Release Devices
2.3.14 Omitted
2.3.15 Door Protection Plates
2.3.15.1 Sizes of Kick Plates
2.3.16 Omitted
2.3.17 Door Stops and Silencers
2.3.18 Padlocks
2.3.19 Thresholds
2.3.20 Weather Stripping Gasketing
2.3.20.1 Extruded Aluminum Retainers
2.3.21 Omitted
2.3.22 Omitted
2.3.23 Special Tools
2.4 FASTENERS
2.5 FINISHES

2.6 KEY CABINET AND CONTROL SYSTEM

PART 3 EXECUTION

3.1 INSTALLATION
3.1.1 Weather Stripping Installation
3.1.1.1 Stop-Applied Weather Stripping
3.1.2 Omitted
3.1.3 Threshold Installation
3.2 FIRE DOORS AND EXIT DOORS
3.3 HARDWARE LOCATIONS
3.4 KEY CABINET AND CONTROL SYSTEM
3.5 FIELD QUALITY CONTROL
3.6 HARDWARE SETS

-- End of Section Table of Contents --

UFGS-08710 (February 2002)

SECTION 08710

DOOR HARDWARE
02/02

PART 1 GENERAL

1.1 REFERENCES

The publications listed below form a part of this specification to the extent referenced. The publications are referred to in the text by the basic designation only.

ASTM INTERNATIONAL (ASTM)

ASTM E 283	(1991) Rate of Air Leakage Through Exterior Windows, Curtain Walls, and Doors Under Specified Pressure Differences Across the Specimen
ASTM F 883	(1990) Padlocks

BUILDERS HARDWARE MANUFACTURERS ASSOCIATION (BHMA)

BHMA A156.1	(1997) Butts and Hinges (BHMA 101)
BHMA A156.2	(1996) Bored and Preassembled Locks and Latches (BHMA 601)
BHMA A156.4	(1992) Door Controls - Closers (BHMA 301)
BHMA A156.5	(1992) Auxiliary Locks & Associated Products (BHMA 501)
BHMA A156.6	(1994) Architectural Door Trim (BHMA 1001)
BHMA A156.7	(1988) Template Hinge Dimensions
BHMA A156.13	(1994) Mortise Locks & Latches (BHMA 621)
BHMA A156.15	(1995) Closer Holder Release Devices
BHMA A156.16	(1997) Auxiliary Hardware
BHMA A156.18	(1993) Materials and Finishes (BHMA 1301)
BHMA A156.21	(1996) Thresholds
BHMA A156.22	(1996) Door Gasketing Systems

INTERNATIONAL CODE COUNCIL (ICC)

ICC IBC	(2003) International Building Code

NATIONAL FIRE PROTECTION ASSOCIATION (NFPA)

NFPA 80 (1999) Fire Doors and Fire Windows

NFPA 101 (1997) Life Safety Code

STEEL DOOR INSTITUTE (SDOI)

SDI 100 (1991) Standard Steel Doors and Frames

UNDERWRITERS LABORATORIES (UL)

UL Bld Mat Dir (1999) Building Materials Directory

1.2 SUBMITTALS

Submit the following in accordance with Section 01330, "Submittal Procedures."

SD-02 Shop Drawings

Hardware schedule;G, AE

Keying system; G, RO

SD-03 Product Data

Hardware items;G, AE

SD-08 Manufacturer's Instructions

Installation

SD-10 Operation and Maintenance Data

Hardware Schedule items, Data Package 1

Submit data package in accordance with Section 01781, "Operation and Maintenance Data."

SD-11 Closeout Submittals

Key bitting

1.3 HARDWARE SCHEDULE

Prepare and submit hardware schedule in the following form:

Hardware Item	Quantity	Size	Reference Publication Type No.	Finish	Mfr. Name and Catalog No.	Key Control Symbols	UL Mark (If fire rated and listed)	BHMA Finish Designation

1.4 KEY BITTING CHART REQUIREMENTS

Submit key bitting charts to the Contracting Officer prior to completion of the work. Include:

a. Complete listing of all keys (AA1, AA2, etc.).

b. Complete listing of all key cuts (AA1-123456, AA2-123458).

c. Tabulation showing which key fits which door.

d. Copy of floor plan showing doors and door numbers.

e. Listing of 20 percent more key cuts than are presently required in each master system.

1.5 QUALITY ASSURANCE

1.5.1 Hardware Manufacturers and Modifications

Provide, as far as feasible, locks, hinges and closers of one lock, hinge, or closer manufacturer's make. Modify hardware as necessary to provide features indicated or specified.

1.6 DELIVERY, STORAGE, AND HANDLING

Deliver hardware in original individual containers, complete with necessary appurtenances including fasteners and instructions. Mark each individual container with item number as shown in hardware schedule. Deliver permanent keys and removable cores to the base locksmith for later installation by Government, either directly or by certified mail. Deliver construction master keys with the locks.

PART 2 PRODUCTS

2.1 TEMPLATE HARDWARE

Hardware to be applied to metal shall be made to template. Promptly furnish template information or templates to door and frame manufacturers. Template hinges shall conform to BHMA A156.7. Coordinate hardware items to prevent interference with other hardware.

2.2 HARDWARE FOR FIRE DOORS AND EXIT DOORS

Provide all hardware necessary to meet the requirements of ICC IBC and NFPA 80 for fire doors and NFPA 101 for exit doors, as well as to other requirements specified, even if such hardware is not specifically mentioned under paragraph entitled "Hardware Schedule." Such hardware shall bear the label of Underwriters Laboratories, Inc., and be listed in UL Bld Mat Dir or labeled and listed by another testing laboratory acceptable to the Contracting Officer. Fire doors shall meet ICC IBC requirements for positive pressure and smoke seals.

2.3 HARDWARE ITEMS

Hinges, pivots, locks, latches, exit devices, bolts, and closers shall be clearly and permanently marked with the manufacturer's name or trademark where it will be visible after the item is installed. For closers with covers, the name or trademark may be beneath the cover.

2.3.1 Hinges

BHMA A156.1, 4 1/2 by 4 1/2 inches unless otherwise specified. Construct

loose pin hinges for exterior doors and reverse-bevel interior doors so that pins will be nonremovable when door is closed. Other antifriction bearing hinges may be provided in lieu of ball-bearing hinges.

2.3.2 Omitted
2.3.3 Omitted

2.3.4 Locks and Latches

2.3.4.1 Omitted

2.3.4.2 Bored Locks and Latches

BHMA A156.2, Series 4000, Grade 1.

2.3.5 Omitted
2.3.6 Omitted

2.3.7 Cylinders and Cores

Provide cylinders and cores for new locks, including locks provided under other sections of this specification. Cylinders and cores shall have seven pin tumblers. Cylinders shall be products of one manufacturer, and cores shall be the products of Best Co.. Knobs of bored locksets shall have interchangeable cores which are removable by special control keys. Stamp each interchangeable core with a key control symbol in a concealed place on the core.

2.3.8 Keying System

Provide a seamless extension of the existing keying system. Existing locks were manufactured by Best and have interchangeable cores. Provide construction interchangeable cores. Provide key cabinet as specified.

2.3.9 Lock Trim

Cast, forged, or heavy wrought construction and commercial plain design.

2.3.9.1 Knobs and Roses

In addition to meeting test requirements of BHMA A156.2 and BHMA A156.13, knobs, roses, and escutcheons shall be 0.050 inch thick if unreinforced. If reinforced, outer shell shall be 0.035 inch thick and combined thickness shall be 0.070 inch, except knob shanks shall be 0.060 inch thick.

2.3.9.2 Lever Handles

Provide lever handles in lieu of knobs where specified in paragraph entitled "Hardware Schedule". Lever handles for exit devices shall meet the test requirements of BHMA A156.13 for mortise locks. Lever handle locks shall have a breakaway feature (such as a weakened spindle or a shear key) to prevent irreparable damage to the lock when a force in excess of that specified in BHMA A156.13 is applied to the lever handle. Lever handles shall return to within 1/2 inch of the door face.

2.3.9.3 Texture

Provide knurled or abrasive coated knobs or lever handles for doors which are accessible to blind persons and which lead to dangerous areas.

2.3.10 Keys

Furnish one file key, one duplicate key, and one working key for each key change and for each master and grand master keying system. Furnish one additional working key for each lock of each keyed-alike group. Furnish two additional keys for each sleeping room. For each building, furnish six grand master and master keys, six construction master keys, and four control keys for removable cores. Furnish a quantity of key blanks equal to 20 percent of the total number of file keys. Stamp each key with appropriate key control symbol and "U.S. property - Do not duplicate." Do not place room number on keys.

2.3.11 Card Reader Access Controls

Access control devices will be Government furnished and shall be Contractor installed (GFCI).

2.3.12 Closers

BHMA A156.4, Series C02000, Grade 1, with PT 4C. Provide with brackets, arms, mounting devices, fasteners, and other features necessary for the particular application. Size closers in accordance with manufacturer's recommendations, or provide multi-size closers, Sizes 1 through 6, and list sizes in the Hardware Schedule. Provide manufacturer's 10 year warranty.

2.3.12.1 Identification Marking

Engrave each closer with manufacturer's name or trademark, date of manufacture, and manufacturer's size designation located to be visible after installation.

2.3.13 Closer Holder-Release Devices

BHMA A156.15.

2.3.14 Omitted

2.3.15 Door Protection Plates

BHMA A156.6.

2.3.15.1 Sizes of Kick Plates

Width for single doors shall be 2 inches less than door width; width for pairs of doors shall be one inch less than door width. Height of kick plates shall be 10 inches for flush doors.

2.3.16 Omitted

2.3.17 Door Stops and Silencers

BHMA A156.16. Silencers Type L03011. Provide three silencers for each single door, two for each pair.

2.3.18 Padlocks

ASTM F 883, with Best cylinder and core.

2.3.19 Thresholds

BHMA A156.21. Use J35100, with vinyl or silicone rubber insert in face of stop, for exterior doors opening out, unless specified otherwise.

2.3.20 Weather Stripping Gasketing

BHMA A156.22. Provide the type and function designation where specified in paragraph entitled "Hardware Schedule". A set shall include head and jamb seals, sweep strips,. Air leakage of weather stripped doors shall not exceed 0.5 cubic feet per minute of air per square foot of door area when tested in accordance with ASTM E 283. Weather stripping shall be one of the following:

2.3.20.1 Extruded Aluminum Retainers

Extruded aluminum retainers not less than 0.050 inch wall thickness with vinyl, neoprene, silicone rubber, or polyurethane inserts. Aluminum shall be clear (natural) anodized.

2.3.21 Omitted
2.3.22 Omitted

2.3.23 Special Tools

Provide special tools, such as spanner and socket wrenches and dogging keys, required to service and adjust hardware items.

2.4 FASTENERS

Provide fasteners of proper type, quality, size, quantity, and finish with hardware. Fasteners exposed to weather shall be of nonferrous metal or stainless steel. Provide fasteners of type necessary to accomplish a permanent installation.

2.5 FINISHES

BHMA A156.18. Hardware shall have BHMA 630 finish (satin stainless steel), unless specified otherwise. Provide items not manufactured in stainless steel in BHMA 626 finish (satin chromium plated) over brass or bronze, except surface door closers which shall have aluminum paint finish, and except steel hinges which shall have BHMA 652 finish (satin chromium plated). Hinges for exterior doors shall be stainless steel with BHMA 630 finish or chromium plated brass or bronze with BHMA 626 finish. Exit devices may be provided in BHMA 626 finish in lieu of BHMA 630 finish except where BHMA 630 is specified under paragraph entitled "Hardware Sets". Exposed parts of concealed closers shall have finish to match lock and door trim.

2.6 KEY CABINET AND CONTROL SYSTEM

BHMA A156.5, Type E8341 (125 hooks).

PART 3 EXECUTION

3.1 INSTALLATION

Install hardware in accordance with manufacturers' printed instructions. Fasten hardware to wood surfaces with full-threaded wood screws or sheet

metal screws. Provide machine screws set in expansion shields for fastening hardware to solid concrete and masonry surfaces. Provide toggle bolts where required for fastening to hollow core construction. Provide through bolts where necessary for satisfactory installation.

3.1.1 Weather Stripping Installation

Handle and install weather stripping so as to prevent damage. Provide full contact, weather-tight seals. Doors shall operate without binding.

3.1.1.1 Stop-Applied Weather Stripping

Fasten in place with color-matched sheet metal screws not more than 9 inches o.c. after doors and frames have been finish painted.

3.1.2 Omitted

3.1.3 Threshold Installation

Extend thresholds the full width of the opening and notch end for jamb stops. Set thresholds in a full bed of sealant and anchor to floor with cadmium-plated, countersunk, steel screws in expansion sleeves.

3.2 FIRE DOORS AND EXIT DOORS

Install hardware in accordance with NFPA 80 for fire doors, and NFPA 101 for exit doors .

3.3 HARDWARE LOCATIONS

SDI 100, unless indicated or specified otherwise.

a. Kick Plates: Push side of single-acting doors. Both sides of double-acting doors.

3.4 KEY CABINET AND CONTROL SYSTEM

Locate where directed. Tag one set of file keys and one set of duplicate keys. Place other keys in appropriately marked envelopes, or tag each key. Furnish complete instructions for setup and use of key control system. On tags and envelopes, indicate and room numbers or master or grand master key.

3.5 FIELD QUALITY CONTROL

After installation, protect hardware from paint, stains, blemishes, and other damage until acceptance of work. Submit notice of testing 15 days before scheduled, so that testing can be witnessed by the Contracting Officer. Adjust hinges, locks, latches, bolts, holders, closers, and other items to operate properly. Demonstrate that permanent keys operate respective locks, and give keys to the Contracting Officer. Correct, repair, and finish, as directed, errors in cutting and fitting and damage to adjoining work.

3.6 HARDWARE SETS

MAIN STATION - VOLUME 1
*2

Group # 1

2	CONTINUOUS HINGE	MCK-12HD X HOD	US28 ~~MM~~

1 EXIT DEVICE	TYPE 1 F01	US32D	~~MM~~
1 ELECTRIC EXIT DEVICE	TYPE ~~1~~2 F03 LESS TRIM, ELECTRIC LATCH RETRACTION	US32D	~~MM~~
1 MULLION	TYPE 22 X 7'6"	SP28	~~MM~~
2 OFFSET PULL	J402 1" X 10"	US32D	~~MM~~
2 CLOSER	C02021 STOP ARM	AL	~~MM~~
1 THRESHOLD	J32100 5" X WOD	AL	~~MM~~
~~1 ELECTRIC STRIKE~~1 POWER TRANSFORMER**			
1 ELECTROC POWER SUPPLY**			

** FOR ELECTRIC EXIT DEVICE-

Group # 2

3 HINGE	A8111 4 1\2 X 4 1\2	US26D	~~MM~~
1 OFFICE LOCK	F81 X LEVER	US26D	~~MM~~
1 CLOSER	C02011 REG ARM	AL	~~MM~~
1 KICK PLATE	J102 10 X WOD	US32D	~~MM~~
1 WALL STOP	L02251	US32D	~~MM~~
3 SILENCERS	GJ64		~~MM~~

Group # 3

3 HINGE	A8111 4 1\2 X 4 1\2	US26D	~~MM~~
1 OFFICE LOCK	F81 X LEVER	US26D	~~MM~~
1 CLOSER	C02011 REG ARM	AL	~~MM~~
1 KICK PLATE	J102 10 X WOD	US32D	~~MM~~
1 WALL STOP	L02251	US32D	~~MM~~
3 SILENCERS	GJ64		~~MM~~

Group # 4

3 HINGE	A8111 4 1\2 X 4 1\2	US26D	~~MM~~
1 OFFICE LOCK	F81 X LEVER	US26D	~~MM~~
1 CLOSER	C02011 REG ARM	AL	~~MM~~
1 KICK PLATE	J102 10 X WOD	US32D	~~MM~~
1 OH STOP	C02541	US32D	~~MM~~
3 SILENCERS	GJ64		~~MM~~

Group # 5

3 HINGE	A8112 4 1\2 X 1 1\2	US26D	~~MM~~
1 PRIVACY	F76 X LEVER	US26D	~~MM~~
1 WALL STOP	L02251	US32D	~~MM~~
3 SILENCERS	GJ64		~~MM~~

Group # 6

3 HINGE	A8112 4 1\2 X 1 1\2	US26D	~~MM~~
1 OFFICE LOCK	F81 X LEVER	US26D	~~MM~~
1 WALL STOP	L02251	US32D	~~MM~~
3 SILENCERS	GJ64		~~MM~~

Group # 7

3 HINGE	A8112 4 1\2 X 1 1\2	US26D	~~MM~~
1 DORMITORY LOCK	F90 X LEVER	US26D	~~MM~~
3 SILENCERS	GJ64		~~MM~~

Group # 8

3 HINGE	A8112 4 1\2 X 1 1\2	US26D	~~MM~~
1 CLASSROOM LOCK	F84 X LEVER	US26D	~~MM~~
1 ROLLER STOP	L02191	US26D	~~MM~~
3 SILENCERS	GJ64		~~MM~~

Group # 9

3 HINGE	A8112 4 1\2 X 1 1\2	US26D	~~MM~~
1 CLASSROOM LOCK	F84 X LEVER	US26D	~~MM~~
1 WALL STOP	L02251	US32D	~~MM~~
3 SILENCERS	GJ64		~~MM~~

Group # 10

3 HINGE	A8112 4 1\2 X 1 1\2	US26D	~~MM~~
1 PRIVACY	F76 X LEVER	US26D	~~MM~~
1 WALL STOP	L02251	US32D	~~MM~~
3 SILENCERS	GJ64		~~MM~~

Group # 11

3 HINGE	A8112 4 1\2 X 1 1\2	US26D	~~MM~~
1 STORE ROOM LOCK	F86 X LEVER	US26D	~~MM~~
1 OH STOP	C05541	US32D	~~MM~~
3 SILENCERS	GJ64		~~MM~~

Group # 12

3 HINGE	A8112 4 1\2 X 1 1\2	US26D	~~MM~~
1 PRIVACY	F76 X LEVER	US26D	~~MM~~
1 CLOSER	C02011 REG ARM	AL	~~MM~~
1 KICK PLATE	J102 10 X WOD	US32D	~~MM~~
1 WALL STOP	L02251	US32D	~~MM~~
3 SILENCERS	GJ64		~~MM~~

Group # 13

6 HINGE	A8111 4 1\2 X 4 1\2	US26D	~~MM~~
2 PUSH PLATE	J301 4 X 16	US32D	~~MM~~
2 PULL PLATE	J405 10" X 4 X 16	US32D	~~MM~~
2 CLOSER	C02021 PA ARM	AL	~~MM~~
2 KICK PLATE	J102 10 X WOD	US32D	~~MM~~
2 WALL STOP	L02251	US32D	~~MM~~
2 SILENCERS	GJ64		~~MM~~

Group # 14

6 HINGE	A8112 4 1\2 X 1 1\2	US26D	~~MM~~
1 FLUSH BOLTS	L04081 12"	US26D	~~MM~~
1 DUST PROOF STRIKE	L04021	US26D	~~MM~~
1 STORE ROOM LOCK	F86 X LEVER	US26D	~~MM~~
2 OH STOP & HOLDER	C05511	US32D	~~MM~~
2 SILENCERS	GJ64		~~MM~~

Group # 15

1 CONTINUOUS HINGE	MCK-12HD X HOD	US28	~~MM~~
1 EXIT DEVICE	TYPE 1 F03 LESS TRIM	US32D	~~MM~~
1 RIM CYLINDER		US26D	~~MM~~
1 OFFSET PULL	J402 1" X 10"	US32D	~~MM~~
1 CLOSER	C02021 STOP ARM	AL	~~MM~~
1 THRESHOLD	J32100 5" X WOD	AL	~~MM~~
1 DRIP CAP	R3Y966 X WOF	AL	~~MM~~

Group # 16

1 CONTINUOUS HINGE	MCK-12HD X HOD	US28	~~MM~~
1 PUSH & PULL BAR SET	J504 1" 10" OFFSET PULL X PUSH BAR	US32D	~~MM~~
1 CLOSER	C02021 STOP ARM	AL	~~MM~~

Group # 17

1 CONTINUOUS HINGE	MCK-12HD X HOD	US28	~~MM~~
1 EXIT DEVICE	TYPE 1 F03 LESS TRIM	US32D	~~MM~~

1 RIM CYLINDER		US26D	~~MM~~
1 OFFSET PULL	J402 1" X 10"	US32D	~~MM~~
1 CLOSER	C02021 STOP ARM	AL	~~MM~~

*2

Group # 18

3 HINGE	A5111 4 1\2 X 4 1\2 NRP	US32D	~~MM~~
1 EXIT DEVICE	TYPE 1 F03 LESS TRIM	US32D	~~MM~~
1 ELECTRIC STRIKE			
1 RIM CYLINDER		US26D	~~MM~~
1 OFFSET PULL	J402 1" X 10"	US32D	~~MM~~
1 CLOSER	C02021 STOP ARM	AL	~~MM~~
1 KICK PLATE	J102 10 X WOD	US32D	~~MM~~
1 THRESHOLD	J32100 5" X WOD	AL	~~MM~~
1 SWEEP STRIP	R3A416 X WOD	AL	~~MM~~
1 GASKETTING	R3C156 WOD X HOD	AL	~~MM~~
1 DRIP CAP	R3Y966 X WOF	AL	~~MM~~

Group # 19

3 HINGE	A8112 4 1\2 X 1 1\2	US26D	~~MM~~
1 STORE ROOM LOCK	F86 X LEVER	US26D	~~MM~~
1 CLOSER	C02011 REG ARM	AL	~~MM~~
1 KICK PLATE	J102 10 X WOD	US32D	~~MM~~
1 WALL STOP	L02251	US32D	~~MM~~
3 SILENCERS	GJ64		~~MM~~

Group # 20

3 HINGE	A5111 4 1\2 X 4 1\2 NRP	US32D	~~MM~~
1 STORE ROOM LOCK	F86 X LEVER	US26D	~~MM~~
1 CLOSER	C02061 H STOP ARM	AL	~~MM~~
1 LOCK GUARD	LP10	US32D	~~MM~~
1 THRESHOLD	J32100 5" X WOD	AL	~~MM~~
1 SWEEP STRIP	R3A416 X WOD	AL	~~MM~~
1 GASKETTING	R3C156 WOD X HOD	AL	~~MM~~
1 DRIP CAP	R3Y966 X WOF	AL	~~MM~~

Group # 21

3 HINGE	A5111 4 1\2 X 4 1\2 NRP	US32D	~~MM~~
1 EXIT DEVICE	TYPE 1 FO8 X KNURLED LEVER	US32D	~~MM~~
1 RIM CYLINDER		US26D	~~MM~~
1 CLOSER	C02061 H STOP ARM	AL	~~MM~~
1 LOCK GUARD	LP10	US32D	~~MM~~
1 THRESHOLD	J32100 5" X WOD	AL	~~MM~~
1 SWEEP STRIP	R3A416 X WOD	AL	~~MM~~
1 GASKETTING	R3C156 WOD X HOD	AL	M
1 DRIP CAP	R3Y966 X WOF	AL	~~MM~~

Group # 22

3 HINGE	A8112 4 1\2 X 1 1\2	US26D	~~MM~~
1 STORE ROOM LOCK	F86 X LEVER KNURLED	US26D	~~MM~~
1 CLOSER	C02011 REG ARM	AL	~~MM~~
1 KICK PLATE	J102 10 X WOD	US32D	~~MM~~
1 WALL STOP	L02251	US32D	~~MM~~
3 SILENCERS	GJ64		~~MM~~

Group # 23

6 HINGE	A5111 4 1\2 X 4 1\2 NRP	US32D	~~MM~~
1 FLUSH BOLTS	L04081 12"	US26D	~~MM~~
1 STORE ROOM LOCK	F86 X LEVER KNURLED	US26D	~~MM~~
1 CLOSER	C02061 H STOP ARM	AL	~~MM~~

ACTIVE LEAF			
1 OH STOP & HOLDER	C02511	US32D	MM
INACTIVE LEAF			
1 LOCK GUARD	LP10	US32D	MM
1 THRESHOLD	J32100 5" X WOD	AL	MM
2 SWEEP STRIP	R3A416 X WOD	AL	MM
1 GASKETTING	R3C156 WOD X HOD	AL	MM
1 DRIP CAP	R3Y966 X WOF	AL	MM

Group # 24

6 HINGE	A5111 4 1\2 X 4 1\2 NRP	US32D	MM
1 FLUSH BOLTS	L04081 12"	US26D	MM
1 STORE ROOM LOCK	F86 X LEVER	US26D	MM
1 CLOSER	C02061 H STOP ARM	AL	MM
ACTIVE LEAF			
1 OH STOP & HOLDER	C02511	US32D	MM
INACTIVE LEAF			
1 LOCK GUARD	LP10	US32D	MM
1 THRESHOLD	J32100 5" X WOD	AL	MM
2 SWEEP STRIP	R3A416 X WOD	AL	MM
1 GASKETTING	R3C156 WOD X HOD	AL	MM
1 DRIP CAP	R3Y966 X WOF	AL	MM

Group # 25

3 HINGE	A8112 4 1\2 X 1 1\2	US26D	MM
1 PRIVACY	F76 X LEVER	US26D	MM
1 OH STOP	C05541	US32D	MM
3 SILENCERS	GJ64		MM

Group # 26

6 HINGE	A8111 4 1\2 X 4 1\2	US26D	MM
2 PUSH PLATE	J301 4 X 16	US32D	MM
2 PULL PLATE	J405 10" X 4 X 16	US32D	MM
2 CLOSER	C02011 REG ARM	AL	MM
2 KICK PLATE	J102 10 X WOD	US32D	MM
2 OH STOP	C02541	US32D	MM
2 SILENCERS	GJ64		MM

Group # 27

3 HINGE	A8111 4 1\2 X 4 1\2	US26D	MM
1 PUSH PLATE	J301 4 X 16	US32D	MM
1 PULL PLATE	J405 10" X 4 X 16	US32D	MM
1 CLOSER	C02021 PA ARM	AL	MM
1 KICK PLATE	J102 10 X WOD	US32D	MM
1 WALL STOP	L02251	US32D	MM
3 SILENCERS	GJ64		MM

Group # 28

3 HINGE	A8112 4 1\2 X 1 1\2	US26D	MM
1 STORE ROOM LOCK	F86 X LEVER	US26D	MM
1 CLOSER	C02011 REG ARM	AL	MM
1 KICK PLATE	J102 10 X WOD	US32D	MM
1 OH STOP	C05541	US32D	MM
3 SILENCERS	GJ64		MM

Group # 29

3 HINGE	A5111 4 1\2 X 4 1\2 NRP	US32D	MM
1 EXIT DEVICE	TYPE 1 F08 X LEVER	US32D	MM
1 RIM CYLINDER		US26D	MM

1 CLOSER	C02021 PA ARM	AL	~~MM~~
1 KICK PLATE	J102 10 X WOD	US32D	~~MM~~
1 RECESSED MAGNETIC	DOOR HOLDERS C00011	US28	~~MM~~
1 THRESHOLD	J32100 5" X WOD	AL	~~MM~~
1 SWEEP STRIP	R3A416 X WOD	AL	~~MM~~
1 GASKETTING	R3C156 WOD X HOD	AL	~~MM~~

Group # 30

3 HINGE	A5111 4 1\2 X 4 1\2 NRP	US32D	~~MM~~
1 EXIT DEVICE	TYPE 1 F08 X LEVER	US32D	~~MM~~
1 RIM CYLINDER		US26D	~~MM~~
1 CLOSER	C02021 PA ARM	AL	~~MM~~
1 KICK PLATE	J102 10 X WOD	US32D	~~MM~~
1 WALL STOP	L02251	US32D	~~MM~~
1 THRESHOLD	J32100 5" X WOD	AL	~~MM~~
1 SWEEP STRIP	R3A416 X WOD	AL	~~MM~~
1 GASKETTING	R3C156 WOD X HOD	AL	~~MM~~

Group # 31

3 HINGE	A8112 4 1\2 X 1 1\2	US26D	~~MM~~
1 STORE ROOM LOCK	F86 X LEVER KNURLED	US26D	~~MM~~
1 CLOSER	C02021 STOP ARM	AL	~~MM~~
3 SILENCERS	GJ64		~~MM~~

Group # 32

3 HINGE	A5111 4 1\2 X 4 1\2	US32D	~~MM~~
1 OFFICE LOCK	F81 X LEVER	US26D	~~MM~~
1 CLOSER	C02011 REG ARM	AL	~~MM~~
1 KICK PLATE	J102 10 X WOD	US32D	~~MM~~
1 WALL STOP	L02251	US32D	~~MM~~
1 THRESHOLD	J32100 5" X WOD	AL	~~MM~~
1 SWEEP STRIP	R3A416 X WOD	AL	~~MM~~
1 GASKETTING	R3C156 WOD X HOD	AL	~~MM~~

Group # 33

3 HINGE	A5111 4 1\2 X 4 1\2	US32D	~~MM~~
1 OFFICE LOCK	F81 X LEVER	US26D	~~MM~~
1 CLOSER	C02021 STOP ARM	AL	~~MM~~
1 KICK PLATE	J102 10 X WOD	US32D	~~MM~~
1 THRESHOLD	J32100 5" X WOD	AL	~~MM~~
1 SWEEP STRIP	R3A416 X WOD	AL	~~MM~~
1 GASKETTING	R3C156 WOD X HOD	AL	~~MM~~

Group # 34

3 HINGE	A8112 4 1\2 X 1 1\2	US26D	~~MM~~
1 PASSAGE SET	F75 X LEVER	US26D	~~MM~~
1 OH STOP	C05541	US32D	~~MM~~
3 SILENCERS	GJ64		~~MM~~

Group # 35

3 HINGE	A8112 4 1\2 X 1 1\2	US26D	~~MM~~
1 DORMITORY LOCK	F90 X LEVER	US26D	~~MM~~
1 CLOSER	C02011 REG ARM	AL	~~MM~~
1 KICK PLATE	J102 10 X WOD	US32D	~~MM~~
1 WALL STOP	L02251	US32D	~~MM~~
3 SILENCERS	GJ64		~~MM~~

Group # 36

3 HINGE	A8112 4 1\2 X 1 1\2	US26D	~~MM~~

1 DORMITORY LOCK	F90 X LEVER	US26D	~~MM~~
1 WALL STOP	L02251	US32D	~~MM~~
3 SILENCERS	GJ64		~~MM~~

Group # 43

3 HINGE	A8112 4 1\2 X 1 1\2	US26D	~~MM~~
1 CLASSROOM LOCK	F84 X LEVER	US26D	~~MM~~
1 OH STOP	C05541	US32D	~~MM~~
3 SILENCERS	GJ64		~~MM~~

Group # 44

3 HINGE	A5111 4 1\2 X 4 1\2	US32D	~~MM~~
1 PUSH PLATE	J301 4 X 16	US32D	~~MM~~
1 PULL PLATE	J405 10" X 4 X 16	US32D	~~MM~~
1 CLOSER	C02011 REG ARM	AL	~~MM~~
1 KICK PLATE	J102 10 X WOD	US32D	~~MM~~
1 WALL STOP	L02251	US32D	~~MM~~
3 SILENCERS	GJ64		~~MM~~

Group # 45

3 HINGE	A5112 4 1\2 X 4 1\2	US32D	~~MM~~
1 STORE ROOM LOCK	F86 X LEVER	US26D	~~MM~~
1 OH STOP & HOLDER	C05511	US32D	~~MM~~
3 SILENCERS	GJ64		~~MM~~

Group # 46

3 HINGE	A8111 4 1\2 X 4 1\2	US26D	~~MM~~
1 PUSH PLATE	J301 4 X 16	US32D	~~MM~~
1 PULL PLATE	J405 10" X 4 X 16	US32D	~~MM~~
1 CLOSER	C02021 STOP ARM	AL	~~MM~~
1 KICK PLATE	J102 10 X WOD	US32D	~~MM~~
3 SILENCERS	GJ64		~~MM~~

Group # 47

3 HINGE	A5112 4 1\2 X 4 1\2 NRP	US32D	~~MM~~
1 STORE ROOM LOCK	F86 X LEVER KNURLED	US26D	~~MM~~
1 CLOSER	C02021 STOP ARM	AL	~~MM~~
3 SILENCERS	GJ64		~~MM~~

Group # 48

6 HINGE	A5111 4 1\2 X 4 1\2 NRP	US32D	~~MM~~
1 FLUSH BOLTS	L04081 12"	US26D	~~MM~~
1 STORE ROOM LOCK	F86 X LEVER	US26D	~~MM~~
1 OH STOP & HOLDER	C02511	US32D	~~MM~~
1 LOCK GUARD	LP10	US32D	~~MM~~
1 THRESHOLD	J32100 5" X WOD	AL	~~MM~~
2 SWEEP STRIP	R3A416 X WOD	AL	~~MM~~
1 GASKETTING	R3C156 WOD X HOD	AL	~~MM~~

Group # 49

3 HINGE	A5111 4 1\2 X 4 1\2	US32D	~~MM~~
1 OFFICE LOCK	F81 X LEVER	US26D	~~MM~~
1 CLOSER	C02011 REG ARM	AL	~~MM~~
1 KICK PLATE	J102 10 X WOD	US32D	~~MM~~
1 WALL STOP	L02251	US32D	~~MM~~
1 THRESHOLD	J32100 5" X WOD	AL	~~MM~~
1 SWEEP STRIP	R3A416 X WOD	AL	~~MM~~
1 GASKETTING	R3C156 WOD X HOD	AL	~~MM~~

Group # 50

3 HINGE	A5112 4 1\2 X 4 1\2	US32D	~~MM~~
1 PRIVACY	F76 X LEVER	US26D	~~MM~~
1 CLOSER	C02011 REG ARM	AL	~~MM~~
1 KICK PLATE	J102 10 X WOD	US32D	~~MM~~
1 GASKETTING	R3C156 WOD X HOD	AL	~~MM~~

Group # 51

3 HINGE	A5111 4 1\2 X 4 1\2 NRP	US32D	~~MM~~
1 CORRIDOR LOCK	F88 X LEVER	US26D	~~MM~~
1 CLOSER	C02021 STOP ARM	AL	~~MM~~
1 LOCK GUARD	LP10	US32D	~~MM~~
1 KICK PLATE	J102 10 X WOD	US32D	~~MM~~
1 THRESHOLD	J32100 5" X WOD	AL	~~MM~~
1 SWEEP STRIP	R3A416 X WOD	AL	~~MM~~
1 GASKETTING	R3C156 WOD X HOD	AL	~~MM~~
1 DRIP CAP	R3Y966 X WOF	AL	~~MM~~

TRANSIT ALERT BUILDING - VOL. 1

Group # 1

1 CONTINUOUS HINGE	MCK-12HD X HOD	US28	~~MM~~
1 ALUM DOOR LOCK	E02101 NARROW STILE	US28	~~MM~~
1 ALUM DOOR LEVER	4568	US28	~~MM~~
1 MORTISE CYLINDER		US26D	~~MM~~
1 PUSH & PULL BAR SET	J504 1" 10" OFFSET PULL X PUSH BAR	US32D	~~MM~~
1 CLOSER	C02021 STOP ARM	AL	~~MM~~
1 THRESHOLD	J32100 5" X WOD	AL	~~MM~~

Group # 2

3 HINGE	A8112 4 1\2 X 1 1\2	US26D	~~MM~~
1 OFFICE LOCK	F81 X LEVER	US26D	~~MM~~
1 WALL STOP	L02251	US32D	~~MM~~
1 SILENCERS			~~MM~~

Group # 3

3 HINGE	A8112 4 1\2 X 1 1\2	US26D	~~MM~~
1 PRIVACY	F76 X LEVER	US26D	~~MM~~
1 WALL STOP	L02251	US32D	~~MM~~
1 SILENCERS			~~MM~~

*2

SAT~~T~~ELLITE STAT~~OPM~~ION - VOL. 2

Group # 1

1 CONTINUOUS HINGE	MCK-12HD X HOD	US28	~~MM~~
1 CONTINUOUS HINGE	MCK-12HD X HOD X EPT PREP	US28	
1 POWER TRANSFORMER	~~1 ALUM DOOR LOCK E02101 NARROW STILE US28 MM~~		
~~1 ALUM DOOR LEVER~~	~~4568~~	~~US28~~	~~MM~~
1 EXIT DEVICE	TYPE 1 F01	US32D	
1 EXIT DEVICE	TYPE 1 F03 LESS RRIM	US32D	
ELECTRIC RETRACTION X RX			
1 POWER SUPPLY AS REQUIRED BY EXIT DEVICE			
1 MULLION	TYPE 32		
1 MORTISE CYLINDER		US26D	~~MM~~
~~1~~2 OFFSET ~~PUSH &~~PULL~~S BAR SET~~ ~~J504~~J402 1" 10" ~~OFFSET PULL X PUSH BAR~~	US32D ~~MM~~		

~~1~~2 CLOSER	C02021 STOP ARM	AL	~~MM~~
1 THRESHOLD	J32100 5" X WOD	AL	~~MM~~

Group # 2

3 HINGE	A8112 4 1\2 X 1 1\2	US26D	~~MM~~
1 OFFICE LOCK	F81 X LEVER	US26D	~~MM~~
1 WALL STOP	L02251	US32D	~~MM~~
1 SILENCERS	GJ64		~~MM~~

Group # 3

3 HINGE	A8112 4 1\2 X 1 1\2	US26D	~~MM~~
1 PRIVACY	F76 X LEVER	US26D	~~MM~~
1 WALL STOP	L02251	US32D	~~MM~~
1 SILENCERS	GJ64		~~MM~~

Group # 4

1 CONTINUOUS HINGE	MCK-12HD X HOD	US28	~~MM~~
1 PUSH & PULL BAR SET	J504 1" 10" OFFSET PULL X PUSH BAR	US32D	~~MM~~
1 CLOSER	C02021 STOP ARM	AL	~~MM~~

Group # 5

6 HINGE	A8112 4 1\2 X 1 1\2	US26D	~~MM~~
2 ROLLER LATCH	E09091	US26D	~~MM~~
2 PULL	J401 3\4" X 8"	US32D	~~MM~~
2 OH STOP & HOLDER	C05511	US32D	~~MM~~
2 SILENCERS	GJ64		~~MM~~

Group # 6

3 HINGE	A5112 4 1\2 X 4 1\2 NRP	US32D	~~MM~~
1 STORE ROOM LOCK	F86 X LEVER KNURLED	US26D	~~MM~~
1 CLOSER	C02011 REG ARM	AL	~~MM~~
1 FLOOR STOP	L02161	US26D	~~MM~~
1 THRESHOLD	J32100 5" X WOD	AL	~~MM~~
1 SWEEP STRIP	R3A416 X WOD	AL	~~MM~~
1 GASKETTING	R3C156 WOD X HOD	AL	~~MM~~

Group # 7

3 HINGE	A8112 4 1\2 X 1 1\2	US26D	~~MM~~
1 STORE ROOM LOCK	F86 X LEVER	US26D	~~MM~~
1 WALL STOP	L02251	US32D	~~MM~~
3 SILENCERS	GJ64		~~MM~~

Group # 8

3 HINGE	A8111 4 1\2 X 4 1\2	US26D	~~MM~~
1 CORRIDOR LOCK	F88 X LEVER	US26D	~~MM~~
1 CLOSER	C02021 HD PA ARM	AL	~~MM~~
1 KICK PLATE	J102 10 X WOD	US32D	~~MM~~
1 WALL STOP	L02251	US32D	~~MM~~
3 SILENCERS	GJ64		~~MM~~

Group # 9

3 HINGE	A8112 4 1\2 X 1 1\2	US26D	~~MM~~
1 PRIVACY	F76 X LEVER	US26D	~~MM~~
1 FLOOR STOP	L02161	US26D	~~MM~~
3 SILENCERS	GJ64		~~MM~~

Group # 10

3 HINGE	A8111 4 1\2 X 4 1\2	US26D	~~MM~~

1	CORRIDOR LOCK	F88 X LEVER	US26D ~~MM~~
1	CLOSER	C02011 REG ARM	AL ~~MM~~
1	KICK PLATE	J102 10 X WOD	US32D ~~MM~~
1	WALL STOP	L02251	US32D ~~MM~~
3	SILENCERS	GJ64	~~MM~~

Group # 11

3	HINGE	A8111 4 1\2 X 4 1\2	US26D ~~MM~~
1	PUSH PLATE	J301 4 X 16	US32D ~~MM~~
1	PULL PLATE	J405 10" X 4 X 16	US32D ~~MM~~
1	CLOSER	C02021 HD PA ARM	AL ~~MM~~
1	KICK PLATE	J102 10 X WOD	US32D ~~MM~~
1	WALL STOP	L02251	US32D ~~MM~~
3	SILENCERS	GJ64	~~MM~~

Group # 12

3	HINGE	A5111 4 1\2 X 4 1\2 NRP	US32D ~~MM~~
1	CORRIDOR LOCK	F88 X LEVER	US26D ~~MM~~
1	CLOSER	C02021 HD PA ARM	AL ~~MM~~
1	KICK PLATE	J102 10 X WOD	US32D ~~MM~~
1	THRESHOLD	J32100 5" X WOD	AL ~~MM~~
1	SWEEP STRIP	R3A416 X WOD	AL ~~MM~~
1	GASKETTING	R3C156 WOD X HOD	AL ~~MM~~

Group # 13

3	HINGE	A5111 4 1\2 X 4 1\2 NRP	US32D ~~MM~~
1	EXIT DEVICE	TYPE 1 F03	US32D ~~MM~~
1	RIM CYLINDER		US26D M
1	CLOSER	C02021 STOP ARM	AL M
1	KICK PLATE	J102 10 X WOD	US32D ~~MM~~
1	THRESHOLD	J32100 5" X WOD	AL ~~MM~~
1	SWEEP STRIP	R3A416 X WOD	AL ~~MM~~
1	GASKETTING	R3C156 WOD X HOD	AL ~~MM~~
1	DRIP CAP	R3Y966 X WOF	AL ~~MM~~

Group # 14

3	HINGE	A8112 4 1\2 X 1 1\2	US26D ~~MM~~
1	DORMITORY LOCK	F90 X LEVER	US26D ~~MM~~
1	WALL STOP	L02251	US32D ~~MM~~
3	SILENCERS	GJ64	~~MM~~

Group # 15

1	HINGE	A5112 4 1\2 X 4 1\2	US32D ~~MM~~
1	PUSH PLATE	J301 4 X 16	US32D ~~MM~~
1	PULL PLATE	J405 10" X 4 X 16	US32D ~~MM~~
1	CLOSER	C02011 REG ARM	AL ~~MM~~
1	KICK PLATE	J102 10 X WOD	US32D ~~MM~~
1	WALL STOP	L02251	US32D ~~MM~~
3	SILENCERS	GJ64	~~MM~~

Group # 16

3	HINGE	A8112 4 1\2 X 1 1\2	US26D ~~MM~~
1	STORE ROOM LOCK	F86 X LEVER	US26D ~~MM~~
1	OH STOP	C05541	US32D ~~MM~~
3	SILENCERS	GJ64	~~MM~~

Group # 17

6	HINGE	A5111 4 1\2 X 4 1\2 NRP	US32D ~~MM~~
1	FLUSH BOLTS	L04081 12"	US26D ~~MM~~

1 STORE ROOM LOCK	F86 X LEVER	US26D	MM
2 OH STOP & HOLDER	C02511	US32D	MM
1 LOCK GUARD	LP10	US32D	MM
1 THRESHOLD	J32100 5" X WOD	AL	MM
2 SWEEP STRIP	R3A416 X WOD	AL	MM
1 GASKETTING	R3C156 WOD X HOD	AL	MM
1 DRIP CAP	R3Y966 X WOF	AL	MM

Group # 18

6 HINGE	A5111 4 1\2 X 4 1\2 NRP	US32D	MM
1 FLUSH BOLTS	L04081 12"	US26D	MM
1 STORE ROOM LOCK	F86 X LEVER KNURLED	US26D	MM
2 OH STOP & HOLDER	C02511	US32D	MM
1 LOCK GUARD	LP10	US32D	MM
1 THRESHOLD	J32100 5" X WOD	AL	MM
2 SWEEP STRIP	R3A416 X WOD	AL	MM
1 GASKETTING	R3C156 WOD X HOD	AL	MM
1 DRIP CAP	R3Y966 X WOF	AL	MM

Group # 19

3 HINGE	A8112 4 1\2 X 1 1\2	US26D	MM
1 CLASSROOM LOCK	F84 X LEVER	US26D	MM
1 WALL STOP	L02251	US32D	MM
3 SILENCERS	GJ64		MM

Group # 20

3 HINGE	A8112 4 1\2 X 1 1\2	US26D	MM
1 CLASSROOM LOCK	F84 X LEVER	US26D	MM
1 OH STOP & HOLDER	C05511	US32D	MM
3 SILENCERS	GJ64		MM

Group # 21

3 HINGE	A5111 4 1\2 X 4 1\2 NRP	US32D	MM
1 CORRIDOR LOCK	F88 X LEVER	US26D	MM
1 CLOSER	C02011 REG ARM	AL	MM
1 THRESHOLD	J32100 5" X WOD	AL	MM
1 SWEEP STRIP	R3A416 X WOD	AL	MM
1 GASKETTING	R3C156 WOD X HOD	AL	MM
1 DRIP CAP	R3Y966 X WOF	AL	MM

-- End of Section --

SECTION TABLE OF CONTENTS

DIVISION 08 - DOORS AND WINDOWS

SECTION 08810A

GLASS AND GLAZING

05/97

PART 1 GENERAL

1.1 REFERENCES
1.2 SUBMITTALS
1.3 SYSTEM DESCRIPTION
1.4 DELIVERY, STORAGE AND HANDLING
1.5 PROJECT/SITE CONDITIONS
1.6 WARRANTY
1.6.1 Insulating Glass

PART 2 PRODUCTS

2.1 ANTI-TERRORISM/FORCE PROTOTECTION
2.2 FLOAT GLASS
2.2.1 Annealed Glass
2.2.2 Heat-Absorbing Glass
2.3 ROLLED GLASS
2.3.1 Wired Glass
2.4 INSULATING GLASS
2.4.1 Clear Insulating Glass
2.4.2 Low-E Insulating Glass
2.5 REFLECTIVE GLASS
2.6 LAMINATED GLAZINGS
2.6.1 Laminated Glass
2.7 MIRRORS
2.7.1 Glass Mirrors
2.7.2 Mirror Accessories
2.7.2.1 Mastic
2.7.2.2 Mirror Frames
2.7.2.3 Mirror Clips
2.8 GLAZING ACCESSORIES
2.8.1 Preformed Tape
2.8.2 Sealant
2.8.3 Glazing Gaskets
2.8.3.1 Fixed Glazing Gaskets
2.8.3.2 Wedge Glazing Gaskets
2.8.3.3 Aluminum Framing Glazing Gaskets
2.8.4 Putty and Glazing Compound
2.8.5 Setting and Edge Blocking

PART 3 EXECUTION

3.1 PREPARATION
3.2 INSTALLATION
3.3 CLEANING
3.4 PROTECTION
3.5 GLAZING SCHEDULE

-- End of Section Table of Contents --

UFGS-08810A (May 1997)

SECTION 08810A

GLASS AND GLAZING
05/97

PART 1 GENERAL

1.1 REFERENCES

The publications listed below form a part of this specification to the extent referenced. The publications are referred to in the text by basic designation only.

AMERICAN NATIONAL STANDARDS INSTITUTE (ANSI)

ANSI Z97.1	(1984; R 1994) Safety Performance Specifications and Methods of Test for Safety Glazing Materials Used in Buildings

AMERICAN SOCIETY FOR TESTING AND MATERIALS (ASTM)

ASTM C 509	(1994) Elastomeric Cellular Preformed Gasket and Sealing Material
ASTM C 669	(1995) Glazing Compounds for Back Bedding and Face Glazing of Metal Sash
ASTM C 864	(1999) Dense Elastomeric Compression Seal Gaskets, Setting Blocks, and Spacers
ASTM C 920	(1998) Elastomeric Joint Sealants
ASTM C 1036	(1991; R 1997) Flat Glass
ASTM C 1172	(1996el) Laminated Architectural Flat Glass
ASTM D 395	(1998) Rubber Property - Compression Set
ASTM E 773	(1997) Accelerated Weathering of Sealed Insulating Glass Units
ASTM E 774	(1997) Classification of the Durability of Sealed Insulating Glass Units
ASTM E 1300	(1998) Determining the Minimum Thickness and Type of Glass Required to Resist a Specified Load

U.S. NATIONAL ARCHIVES AND RECORDS ADMINISTRATION (NARA)

16 CFR 1201	Safety Standard for Architectural Glazing Materials

U.S. GENERAL SERVICES ADMINISTRATION (GSA)

CID A-A-378	(Basic) Putty Linseed Oil Type, (for Wood-Sash-Glazing)

GLASS ASSOCIATION OF NORTH AMERICA (GANA)

GANA Glazing Manual	(1997) Glazing Manual

NATIONAL FIRE PROTECTION ASSOCIATION (NFPA)

NFPA 80	(1999) Fire Doors and Fire Windows
NFPA 252	(1995) Fire Tests of Door Assemblies
NFPA 257	(1996) Fire Tests for Window and Glass Block Assemblies

*2

UNIFIED FACILITIES CRITERIA (UFC)

UFC 4-010-01	(8 Oct 2003) Unified Facilities Criteria (UFC) DoD Minimum Anti-Terrorism Standards for Buildings

1.2 SUBMITTALS

Government approval is required for submittals with a "G" designation; submittals not having a "G" designation are for information only. When used, a designation following the "G" designation identifies the office that will review the submittal for the Government. The following shall be submitted in accordance with Section 01330 SUBMITTAL PROCEDURES:

SD-02 Shop Drawings

Installation

Drawings showing complete details of the proposed setting methods, mullion details, edge blocking, size of openings, frame details, materials, and types and thickness of glass.

SD-03 Product Data

Insulating Glass
Glazing Accessories

Manufacturer's descriptive product data, handling and storage recommendations, installation instructions, and cleaning instructions.

SD-04 Samples

Insulating Glass

Two 8 x 10 inch samples of each of the following: tinted glass, patterned glass, heat-absorbing glass, and insulating glass units.

SD-07 Certificates

Insulating Glass

Certificates stating that the glass meets the specified requirements. Labels or manufacturers marking affixed to the glass will be accepted in lieu of certificates.

1.3 SYSTEM DESCRIPTION

Glazing systems shall be fabricated and installed watertight and airtight to withstand thermal movement and wind loading without glass breakage, gasket failure, deterioration of glazing accessories, and defects in the work. Glazed panels shall comply with the safety standards, as indicated in accordance with ANSI Z97.1. Glazed panels shall comply with indicated wind/snow loading in accordance with ASTM E 1300.

1.4 DELIVERY, STORAGE AND HANDLING

Glazing compounds shall be delivered to the site in the manufacturer's unopened containers. Glass shall be stored indoors in a safe, well ventilated dry location in accordance with manufacturer's instructions, and shall not be unpacked until needed for installation. Glass shall not be stored on site over 1 month.

1.5 PROJECT/SITE CONDITIONS

Glazing work shall not be started until outdoor temperature is above 40 degrees F and rising, unless procedures recommended by glass manufacturer and approved by Contracting Officer are made to warm the glass and rabbet surfaces. Ventilation shall be provided to prevent condensation of moisture on glazing work during installation. Glazing work shall not be performed during damp or raining weather.

1.6 WARRANTY

1.6.1 Insulating Glass

Manufacturer shall warrant the insulating glass to be free of fogging or film formation on the internal glass surfaces caused by failure of the hermetic seal for a period of 10 years from Date of Substantial Completion. Warranty shall be signed by manufacturer.

PART 2 PRODUCTS

*2

2.1 ANTI-TERRORISM/FORCE PROTOTECTION

Glass amd glazing materials in exterior windows and glzed doors, including transoms and sidelights, shall conform to the requirements of UFC 4-010-01.

2.2 FLOAT GLASS

2.2.1 Annealed Glass

Annealed glass shall be Type I transparent flat type, Class 1 - clear, Quality q3 - glazing select, conforming to ASTM C 1036.

2.2.2 Heat-Absorbing Glass

Heat-absorbing glass shall be Type I transparent flat type, Class 2-tinted, Quality q3 - glazing select, 45 percent light transmittance, 55 percent

shading coefficient, conforming to ASTM C 1036. Color shall be bronze.

2.3 ROLLED GLASS

2.3.1 Wired Glass

Wired glass shall be Type II flat type, Class 1 - translucent , Quality q8 - glazing, Form 1 - wired and polished both sides , conforming to ASTM C 1036. Wire mesh shall be polished stainless steel Mesh 2 - square. Wired glass for fire-rated windows shall bear an identifying UL label or the label of a nationally recognized testing agency, and shall be rated for 45 minutes when tested in accordance with NFPA 257. Wired glass for fire-rated doors shall be tested as part of a door assembly in accordance with NFPA 252.

2.4 INSULATING GLASS

Insulating glass shall be Class A preassembled units of dual-seal construction consisting of two lites of glass separated by an aluminum, steel, or stainless steel, spacer and dehydrated space conforming to ASTM E 773 and ASTM E 774. Spacer shall be roll-formed, with bent or tightly welded or keyed and sealed joints to completely seal the spacer periphery and eliminate moisture and hydrocarbon vapor transmission into airspace through the corners. Primary seal shall be compressed polyisobutylene and the secondary seal shall be a specially formulated silicone. Glass types shall be as follows:

2.4.1 Clear Insulating Glass

Glass for two-pane insulating units shall be Type I annealed glass, Class 1 - clear, Quality q3 - glazing select, conforming to ASTM C 1036. Provide at interior openings where indicated.

2.4.2 Low-E Insulating Glass

Interior glass panes for Low-E insulating units shall be laminate glass as specified in Paragraph Laminated Glass. Exterior panes for Windows A and B shall be annealed glass as specified in Paragraph Annealed Glass and for Window D shall be tempered glass as specified in Paragraph Tempered Glass, in either case with anti-reflective low-emissivity coating on No. 2 surface (inside surface of exterior pane), Quality q3 - glazing select, conforming to ASTM C 1036. Glass performance shall be shading coefficient 48. Color shall be bronze. All insylating glass in project shall be Low-E insulating glass. Contractor may provide at his oprion the Low-E coating on the No. 3 surface (air space face of interiorr pane).

2.5 REFLECTIVE GLASS

Reflective glass shall conform to the following requirements.

2.6 LAMINATED GLAZINGS

2.6.1 Laminated Glass

Laminated glass shall consist of two layers of Type I transparent float glass, Class 1-clear Quality q3 - glazing select, conforming to ASTM C 1036. Glass shall be bonded together with 0.030 inchthick PVB interlayer under pressure, or alternatives such as resin laminates, conforming to requirements of 16 CFR 1201 and ASTM C 1172. Color shall be clear.

2.7 MIRRORS

2.7.1 Glass Mirrors

Glass for mirrors shall be Type I transparent flat type, Class 1-clear, Glazing Quality q1 1/4 inch thick conforming to ASTM C 1036. Glass color shall be clear. Glass shall be coated on one surface with silver coating, copper protective coating, and mirror backing paint. Silver coating shall be highly adhesive pure silver coating of a thickness which shall provide reflectivity of 83 percent or more of incident light when viewed through 1/4 inch thick glass, and shall be free of pinholes or other defects. Copper protective coating shall be pure bright reflective copper, homogeneous without sludge, pinholes or other defects, and shall be of proper thickness to prevent "adhesion pull" by mirror backing paint. Mirror backing paint shall consist of two coats of special scratch and abrasion-resistant paint , and shall be baked in uniform thickness to provide a protection for silver and copper coatings which will permit normal cutting and edge fabrication.

2.7.2 Mirror Accessories

2.7.2.1 Mastic

Mastic for setting mirrors shall be a polymer type mirror mastic resistant to water, shock, cracking, vibration and thermal expansion. Mastic shall be compatible with mirror backing paint, and shall be approved by mirror manufacturer.

2.7.2.2 Mirror Frames

Mirrors shall be provided with mirror frames (J-mold channels) fabricated of one-piece roll-formed Type 304 stainless steel with No. 4 brushed satin finish and concealed fasteners which will keep mirrors snug to wall. Frames shall be 1-1/4 x 1/4 x 1/4 inch continuous at top and bottom of mirrors. Concealed fasteners of type to suit wall construction material shall be provided with mirror frames.

2.7.2.3 Mirror Clips

Concealed fasteners of type to suit wall construction material shall be provided with clips.

2.8 GLAZING ACCESSORIES

2.8.1 Preformed Tape

Preformed tape shall be elastomeric rubber extruded into a ribbon of a width and thickness suitable for specific application. Tape shall be of type which will remain resilient, have excellent adhesion, and be chemically compatible to glass, metal, or wood.

2.8.2 Sealant

Sealant shall be elastomeric conforming to ASTM C 920, Type S or M, Grade NS, Class 12.5, Use G, of type chemically compatible with setting blocks, preformed sealing tape and sealants used in manufacturing insulating glass. Color of sealant shall be as selected.

2.8.3 Glazing Gaskets

Glazing gaskets shall be extruded with continuous integral locking projection designed to engage into metal glass holding members to provide a watertight seal during dynamic loading, building movements and thermal movements. Glazing gaskets for a single glazed opening shall be continuous one-piece units with factory-fabricated injection-molded corners free of flashing and burrs. Glazing gaskets shall be in lengths or units recommended by manufacturer to ensure against pull-back at corners. Glazing gasket profiles shall be as indicated on drawings.

2.8.3.1 Fixed Glazing Gaskets

Fixed glazing gaskets shall be closed-cell (sponge) smooth extruded compression gaskets of cured elastomeric virgin neoprene compounds conforming to ASTM C 509, Type 2, Option 1.

2.8.3.2 Wedge Glazing Gaskets

Wedge glazing gaskets shall be high-quality extrusions of cured elastomeric virgin neoprene compounds, ozone resistant, conforming to ASTM C 864, Option 1, Shore A durometer between 65 and 75.

2.8.3.3 Aluminum Framing Glazing Gaskets

Glazing gaskets for aluminum framing shall be permanent, elastic, non-shrinking, non-migrating, watertight and weathertight.

2.8.4 Putty and Glazing Compound

Glazing compound shall conform to ASTM C 669 for face-glazing metal sash. Putty shall be linseed oil type conforming to CID A-A-378for face-glazing primed wood sash. Putty and glazing compounds shall not be used with insulating glass or laminated glass.

2.8.5 Setting and Edge Blocking

Neoprene setting blocks shall be dense extruded type conforming to ASTM D 395, Method B, Shore A durometer between 70 and 90. Edge blocking shall be Shore A durometer of 50 (+ or - 5). Silicone setting blocks shall be required when blocks are in contact with silicone sealant. Profiles, lengths and locations shall be as required and recommended in writing by glass manufacturer.

PART 3 EXECUTION

3.1 PREPARATION

Openings and framing systems scheduled to receive glass shall be examined for compliance with approved shop drawings, GANA Glazing Manual and glass manufacturer's recommendations including size, squareness, offsets at corners, presence and function of weep system, face and edge clearance requirements and effective sealing between joints of glass-framing members. Detrimental materials shall be removed from glazing rabbet and glass surfaces and wiped dry with solvent. Glazing surfaces shall be dry and free of frost.

3.2 INSTALLATION

Glass and glazing work shall be performed in accordance with approved shop drawings, GANA Glazing Manual, glass manufacturer's instructions and warranty requirements. Glass shall be installed with factory labels intact and removed only when instructed. Wired glass and fire/safety rated glass shall be installed in accordance with NFPA 80. Edges and corners shall not be ground, nipped or cut after leaving factory. Springing, forcing or twisting of units during installation will not be permitted.

3.3 CLEANING

Upon completion of project, outside surfaces of glass shall be washed clean and the inside surfaces of glass shall be washed and polished in accordance with glass manufacturer's recommendations.

3.4 PROTECTION

Glass work shall be protected immediately after installation. Glazed openings shall be identified with suitable warning tapes, cloth or paper flags, attached with non-staining adhesives. Reflective glass shall be protected with a protective material to eliminate any contamination of the reflective coating. Protective material shall be placed far enough away from the coated glass to allow air to circulate to reduce heat buildup and moisture accumulation on the glass. Glass units which are broken, chipped, cracked, abraded, or otherwise damaged during construction activities shall be removed and replaced with new units.

3.5 GLAZING SCHEDULE

Provide the following types of glazing in indicated locations:

MAIN FIRE STATION

1. Exterior Windows A, B, C: Low-E insulating glass.

2. Sidelights D, E (exterior): Low-E insulating glass with tempered exterior lite.

3. Sidelights D, E (interior): Clear tempered glass.

4. Transoms D, E (exterior): Low-E insulating glass.

5. Transoms D, E (interior): Clear float glass.

6. Windows F, G, K: Clear float glass.

7. Window H: Clear tempered glass.

8. Door C, D, E (exterior): Laminated glass.

9. Door C, D, E (interior): Clear tempered glass.

10. Door F: Obscure tempered glass.

11. Door G: Low-E insulating glass with tempered exterior lite.

SATELLITE FIRE STATION

1. Exterior Windows A, B, C: Low-E insulating glass.

2. Sidelights D, E (exterior): Low-E insulation glass with tempered exterior lite.

3. Sidelights E (interior): Clear tempered glass.

4. Transoms D, E (exterior): Low-E insulating glass.

5. Transom E (interior: Clear float glass.

6. Door C (exterior): Laminated glass.

7. Door C (interior): Clear tempered glass.

8. Door E: Low-E insulating glass with tempered exterior lite.

TRANSIT ALERT BUILDING

1. Window A: Low-E insulating glass.

2. Sidelights B: Low-E insulation glass with tempered exterior lite.

3. Door B: Laminated glass.

4. Door C: Clear tempered glass.

-- End of Section --

SECTION TABLE OF CONTENTS

DIVISION 09 - FINISHES

SECTION 09100N

METAL SUPPORT ASSEMBLIES

09/99

PART 1 GENERAL

1.1 REFERENCES
1.2 SUBMITTALS
1.3 DELIVERY, STORAGE, AND HANDLING

PART 2 PRODUCTS

2.1 MATERIALS
2.1.1 Materials for Attachment of Lath
2.1.1.1 Suspended and Furred Ceiling Systems and Wall Furring
2.1.1.2 Nonload-Bearing Wall Framing
2.1.2 Materials for Attachment of Gypsum Wallboard
2.1.2.1 Suspended and Furred Ceiling Systems
2.1.2.2 Nonload-Bearing Wall Framing and Furring

PART 3 EXECUTION

3.1 INSTALLATION
3.1.1 Systems for Attachment of Lath
3.1.1.1 Suspended and Furred Ceiling Systems and Wall Furring
3.1.1.2 Nonload-Bearing Wall Framing
3.1.2 Systems for Attachment of Gypsum Wallboard
3.1.2.1 Suspended and Furred Ceiling Systems
3.1.2.2 Nonload-Bearing Wall Framing and Furring
3.2 ERECTION TOLERANCES

-- End of Section Table of Contents --

UFGS-09100N (September 1999)

SECTION 09100N

METAL SUPPORT ASSEMBLIES
09/99

PART 1 GENERAL

1.1 REFERENCES

The publications listed below form a part of this specification to the extent referenced. The publications are referred to in the text by the basic designation only.

AMERICAN SOCIETY FOR TESTING AND MATERIALS (ASTM)

ASTM A 463/A 463M	(1997; Rev. A) Steel Sheet, Aluminum-Coated, by the Hot-Dip Process
ASTM A 653/A 653M	(1998) Steel Sheet, Zinc-Coated (Galvanized) or Zinc-Iron Alloy-Coated (Galvannealed) by the Hot-Dip Process
ASTM C 645	(1998) Nonstructural Steel Framing Members
ASTM C 754	(1997) Installation of Steel Framing Members to Receive Screw-Attached Gypsum Panel Products
ASTM C 841	(1997) Installation of Interior Lathing and Furring

METAL LATH/STEEL FRAMING ASSOCIATION (ML/SFA)

NAAMM ML/SFA MLF	(1991) Metal Lathing and Furring

1.2 SUBMITTALS

Government approval is required for submittals with a "G" designation; submittals not having a "G" designation are for information only. When used, a designation following the "G" designation identifies the office that will review the submittal for the Government. The following shall be submitted in accordance with Section 01330 SUBMITTAL PROCEDURES:

SD-02 Shop Drawings

Metal support systems

Submit for the erection of metal framing, furring, and ceiling suspension systems. Indicate materials, sizes, thicknesses, and fastenings.

1.3 DELIVERY, STORAGE, AND HANDLING

Deliver materials to the job site and store in ventilated dry locations.

Storage area shall permit easy access for inspection and handling. If materials are stored outdoors, stack materials off the ground, supported on a level platform, and fully protected from the weather. Handle materials carefully to prevent damage. Remove damaged items and provide new items.

PART 2 PRODUCTS

2.1 MATERIALS

Provide steel materials for metal support systems with galvanized coating ASTM A 653/A 653M, G-60; aluminum coating ASTM A 463/A 463M, T1-25; or a 55-percent aluminum-zinc coating.

2.1.1 Materials for Attachment of Lath

2.1.1.1 Suspended and Furred Ceiling Systems and Wall Furring

ASTM C 841.

2.1.1.2 Nonload-Bearing Wall Framing

NAAMM ML/SFA MLF.

2.1.2 Materials for Attachment of Gypsum Wallboard

2.1.2.1 Suspended and Furred Ceiling Systems

ASTM C 645.

2.1.2.2 Nonload-Bearing Wall Framing and Furring

ASTM C 645, but not thinner than 0.0179 inch thickness, with 0.0329 inch minimum thickness supporting wall hung items such as cabinetwork, equipment and fixtures .

PART 3 EXECUTION

3.1 INSTALLATION

3.1.1 Systems for Attachment of Lath

3.1.1.1 Suspended and Furred Ceiling Systems and Wall Furring

ASTM C 841, except as indicated otherwise.

3.1.1.2 Nonload-Bearing Wall Framing

NAAMM ML/SFA MLF, except that framing members shall be 16 inches o.c. unless indicated otherwise.

3.1.2 Systems for Attachment of Gypsum Wallboard

3.1.2.1 Suspended and Furred Ceiling Systems

ASTM C 754, except that framing members shall be 16 inches o.c. unless indicated otherwise.

3.1.2.2 Nonload-Bearing Wall Framing and Furring

ASTM C 754, except as indicated otherwise.

3.2 ERECTION TOLERANCES

Framing members which will be covered by finish materials such as wallboard, plaster, or ceramic tile set in a mortar setting bed, shall be within the following limits:

a. Layout of walls and partitions: 1/4 inch from intended position;

b. Plates and runners: 1/4 inch in 8 feet from a straight line;

c. Studs: 1/4 inch in 8 feet out of plumb, not cumulative; and

d. Face of framing members: 1/4 inch in 8 feet from a true plane.

Framing members which will be covered by ceramic tile set in dry-set mortar, latex-portland cement mortar, or organic adhesive shall be within the following limits:

a. Layout of walls and partitions: 1/4 inch from intended position;

b. Plates and runners: 1/8 inch in 8 feet from a straight line;

c. Studs: 1/8 inch in 8 feet out of plumb, not cumulative; and

d. Face of framing members: 1/8 inch in 8 feet from a true plane.

-- End of Section --

SECTION TABLE OF CONTENTS

DIVISION 09 - FINISHES

SECTION 09250

GYPSUM BOARD

11/01

PART 1 GENERAL

1.1 REFERENCES
1.2 SUBMITTALS
1.3 DELIVERY, STORAGE, AND HANDLING
1.3.1 Delivery
1.3.2 Storage
1.3.3 Handling
1.4 ENVIRONMENTAL CONDITIONS
1.4.1 Temperature
1.4.2 Exposure to Weather
1.5 QUALIFICATIONS

PART 2 PRODUCTS

2.1 MATERIALS
2.1.1 Gypsum Board
2.1.2 Gypsum Backing Board
2.1.2.1 Type X (Special Fire-Resistant)
2.1.3 Glass Mat Covered or Reinforced Gypsum Sheathing
2.1.4 Cementitious Backer Units
2.1.4.1 Exterior Gypsum Soffit Board
2.1.5 Joint Treatment Materials
2.1.5.1 Embedding Compound
2.1.5.2 Finishing or Topping Compound
2.1.5.3 All-Purpose Compound
2.1.5.4 Setting or Hardening Type Compound
2.1.5.5 Joint Tape
2.1.6 Fasteners
2.1.6.1 Screws
2.1.7 Adhesives
2.1.7.1 Adhesive for Laminating
2.1.8 Shaftwall Liner Panel
2.1.9 Accessories
2.1.10 Asphalt Impregnated Building Felt
2.1.11 Water

PART 3 EXECUTION

3.1 EXAMINATION
3.1.1 Framing and Furring
3.2 APPLICATION OF GYPSUM BOARD
3.2.1 Application of Gypsum Board to Steel Framing and Furring
3.2.2 Gypsum Board for Wall Tile or Tile Base Applied with Adhesive
3.2.3 Control Joints
3.2.4 Application of Exterior Gypsum Soffit Board of Bathrooms
3.3 APPLICATION OF CEMENTITIOUS BACKER UNITS
3.3.1 Application

3.3.2 Joint Treatment
3.4 FINISHING OF GYPSUM BOARD
3.4.1 Uniform Surface
3.5 SEALING
3.6 FIRE-RESISTANT ASSEMBLIES
3.7 PATCHING
3.8 SHAFT WALL FRAMING

-- End of Section Table of Contents --

UFGS-09250 (November 2001)

SECTION 09250

GYPSUM BOARD
11/01

PART 1 GENERAL

1.1 REFERENCES

The publications listed below form a part of this specification to the extent referenced. The publications are referred to in the text by the basic designation only.

AMERICAN NATIONAL STANDARDS INSTITUTE (ANSI)

ANSI A108.11	(1992) Interior Installation of Cementitious Backer Units
ANSI A118.9	(1992) Cementitious Backer Units

AMERICAN SOCIETY FOR TESTING AND MATERIALS (ASTM)

ASTM C 36/C 36M	(1999) Gypsum Wallboard
ASTM C 79/C 79M	(2001) Standard Specification for Treated Core and Nontreated Core Gypsum Sheathing Board
ASTM C 442/C 442M	(1999; Rev. A) Gypsum Backing Board and Coreboard
ASTM C 475	(1994) Joint Compound and Joint Tape for Finishing Gypsum Board
ASTM C 630/C 630M	(2001) Water-Resistant Gypsum Backing Board
ASTM C 840	(2001) Application and Finishing of Gypsum Board
ASTM C 954	(2000) Steel Drill Screws for the Application of Gypsum Board or Metal Plaster Bases to Steel Studs from 0.033 in. (0.84 mm) to 0.112 in. (2.84 mm) in Thickness
ASTM C 931/C 931M	(1998) Exterior Gypsum Soffit Board
ASTM C 1002	(2000) Steel Drill Screws for the Application of Gypsum Panel Products or Metal Plaster Bases
ASTM C 1047	(1999) Accessories for Gypsum Wallboard and Gypsum Veneer Base
ASTM C 1177/C 1177M	(1999) Standard Specification for Glass

	Mat Gypsum Substrate for use as Sheathing
ASTM C 1396/C 1396M	(2000) Standard Specification for Gypsum Board
ASTM D 226	(1997) Standard Specification for Asphalt-Saturated Organic Felt Used in Roofing and Waterproofing

GYPSUM ASSOCIATION (GA)

GA 214	(1996) Recommended Levels of Gypsum Board Finish
GA 216	(2000) Application and Finishing of Gypsum Board
GA 600	(2000) Fire Resistance and Sound Control Design Manual

UNDERWRITERS LABORATORIES (UL)

UL Fire Resist Dir	(2000) Fire Resistance Directory

1.2 SUBMITTALS

Submit the following in accordance with Section 01330, "Submittal Procedures."

*5

SD-03 Product Data

Cementitious backer units

Exterior Gypsum Soffit Board

Accessories

Submit for each type of gypsum board.

SD-07 Certificates

Asbestos Free Materials

Certify that gypsum board types, gypsum backing board types, cementitious backer units, and joint treating materials do not contain asbestos.

1.3 DELIVERY, STORAGE, AND HANDLING

1.3.1 Delivery

Deliver materials in the original packages, containers, or bundles with each bearing the brand name, applicable standard designation, and name of manufacturer, or supplier.

1.3.2 Storage

Keep materials dry by storing inside a sheltered building. Where necessary to store gypsum board and cementitious backer units outside, store off the

ground, properly supported on a level platform, and protected from direct exposure to rain, snow, sunlight, and other extreme weather conditions. Provide adequate ventilation to prevent condensation.

1.3.3 Handling

Neatly stack gypsum board and cementitious backer unitsflat to prevent sagging or damage to the edges, ends, and surfaces.

1.4 ENVIRONMENTAL CONDITIONS

1.4.1 Temperature

Maintain a uniform temperature of not less than 50 degrees F in the structure for at least 48 hours prior to, during, and following the application of gypsum board, cementitious backer units, and joint treatment materials, or the bonding of adhesives.

1.4.2 Exposure to Weather

Protect gypsum board and cementitious backer unit products from direct exposure to rain, snow, sunlight, and other related extreme weather conditions.

1.5 QUALIFICATIONS

Manufacturer shall specialize in manufacturing the types of material specified and shall have a minimum of 5 years of documented successful experience. Installer shall specialize in the type of gypsum board work required and shall have a minimum of 3 years of documented successful experience.

PART 2 PRODUCTS

2.1 MATERIALS

Conform to specifications, standards and requirements specified herein. Provide gypsum board types, gypsum backing board types, cementitious backing units, and joint treating materials manufactured from asbestos free materials only.

2.1.1 Gypsum Board

ASTM C 36/C 36M and ASTM C 1396/C 1396M.

2.1.2 Gypsum Backing Board

ASTM C 442/C 442M, gypsum backing board shall be used as a base in a multilayer system.

2.1.2.1 Type X (Special Fire-Resistant)

48 inches wide, 5/8 inch thick, square edges.

2.1.3 Glass Mat Covered or Reinforced Gypsum Sheathing

Exceeds physical properties of ASTM C 79/C 79M and ASTM C 1177/C 1177M. Provide 5/8 inch, gypsum sheathing. Gypsum board shall consist of a noncombustible water-resistant core, with a glass mat surfaces embedded to

the gypsum core or reinforcing embedded throughout the gypsum core. Gypsum sheathing board shall be warranted for at least 6 months against delamination due to direct weather exposure. Provide continuous, asphalt impregnated, building felt to cover exterior face of sheathing.

2.1.4 Cementitious Backer Units

ANSI A118.9.

2.1.4.1 Exterior Gypsum Soffit Board

Exterior gypsum soffit board shall conform to ASTM C 931/C 931M, regular , 48 inches wide.

2.1.5 Joint Treatment Materials

ASTM C 475.

2.1.5.1 Embedding Compound

Specifically formulated and manufactured for use in embedding tape at gypsum board joints and compatible with tape, substrate and fasteners.

2.1.5.2 Finishing or Topping Compound

Specifically formulated and manufactured for use as a finishing compound.

2.1.5.3 All-Purpose Compound

Specifically formulated and manufactured to serve as both a taping and a finishing compound and compatible with tape, substrate and fasteners.

2.1.5.4 Setting or Hardening Type Compound

Specifically formulated and manufactured for use with fiber glass mesh tape.

2.1.5.5 Joint Tape

Cross-laminated, tapered edge, reinforced paper, or fiber glass mesh tape recommended by the manufacturer.

2.1.6 Fasteners

2.1.6.1 Screws

ASTM C 1002, Type "G", Type "S" or Type "W" steel drill screws for fastening gypsum board to gypsum board, wood framing members and steel framing members less than 0.033 inch thick. ASTM C 954 steel drill screws for fastening gypsum board to steel framing members 0.033 to 0.112 inch thick. Provide cementitious backer unit screws with a polymer coating.

2.1.7 Adhesives

Do not use adhesive containing benzene, carbon tetrachloride, or trichloroethylene.

2.1.7.1 Adhesive for Laminating

For laminating two-ply gypsum board systems, provide adhesive recommended

by gypsum board manufacturer.

2.1.8 Shaftwall Liner Panel

ASTM C 442/C 442M. Shaftwall liner panel shall conform to UL Fire Resist Dir for the Design Number(s) indicated. Liner Panel shall be specifically manufactured for cavity shaftwall system, with water-resistant paper faces, bevel edges, single lengths to fit required conditions, thickness as indicated, by 24" wide.

2.1.9 Accessories

ASTM C 1047. Fabricate from corrosion protected steel or plastic designed for intended use. Accessories manufactured with paper flanges are not acceptable. Flanges shall be free of dirt, grease, and other materials that may adversely affect bond of joint treatment.

2.1.10 Asphalt Impregnated Building Felt

The moisture barrier over gypsum sheathing shall be 15-lb asphalt impregnated felt conforming to ASTM D 226 Type I (No. 15).

2.1.11 Water

Clean, fresh, and potable.

PART 3 EXECUTION

3.1 EXAMINATION

3.1.1 Framing and Furring

Verify that framing and furring are securely attached and of sizes and spacing to provide a suitable substrate to receive gypsum board and cementitious backer units. Verify that all blocking, headers and supports are in place to support plumbing fixtures and to receive soap dishes, grab bars, towel racks, and similar items. Do not proceed with work until framing and furring are acceptable for application of gypsum board and cementitious backer units.

3.2 APPLICATION OF GYPSUM BOARD

Apply gypsum board to framing and furring members in accordance with ASTM C 840 or GA 216 and the requirements specified herein. Apply gypsum board with separate panels in moderate contact; do not force in place. Stagger end joints of adjoining panels. Neatly fit abutting end and edge joints. Use gypsum board of maximum practical length. Cut out gypsum board as required to make neat close joints around openings. In vertical application of gypsum board, provide panels in lengths required to reach full height of vertical surfaces in one continuous piece. Surfaces of gypsum board and substrate members may be bonded together with an adhesive, except where prohibited by fire rating(s). Treat edges of cutouts for plumbing pipes, screwheads, and joints with water-resistant compound as recommended by the gypsum board manufacturer. Provide type of gypsum board for use in each system specified herein as indicated.

3.2.1 Application of Gypsum Board to Steel Framing and Furring

Apply in accordance with ASTM C 840, System VIII or GA 216.

3.2.2 Gypsum Board for Wall Tile or Tile Base Applied with Adhesive

In dry areas (areas other than tubs, shower enclosures, saunas, steam rooms, gang shower rooms), apply or water-resistant gypsum backing board in accordance with ASTM C 840, System X or GA 216.

3.2.3 Control Joints

Install expansion and contraction joints in ceilings and walls in accordance with ASTM C 840, System XIII or GA 216, unless indicated otherwise. Control joints between studs in fire-rated construction shall be filled with firesafing insulation to match the fire-rating of construction.

3.2.4 Application of Exterior Gypsum Soffit Board of Bathrooms

Exterior gypsum soffit board shall be installed in individual unit bathroom ceilings in accordance with manufacturer's instructions.

3.3 APPLICATION OF CEMENTITIOUS BACKER UNITS

3.3.1 Application

Behind brick veneer at columns, apply cementitious backer units in accordance with ANSI A108.11. A 15 lb asphalt impregnated, continuous felt paper membrane shall be placed behind cementitious backer units, between backer units and studs or base layer of gypsum board. Membrane shall be placed with a minimum 6 inch overlap of sheets laid shingle style.

3.3.2 Joint Treatment

ANSI A108.11.

3.4 FINISHING OF GYPSUM BOARD

Tape and finish gypsum board in accordance with ASTM C 840, GA 214 and GA 216. Plenum areas above ceilings shall be finished to Level 1 in accordance with GA 214. Water resistant gypsum backing board, ASTM C 630/C 630M, to receive ceramic tile shall be finished to Level 2 in accordance with GA 214. Walls and ceilings to receive a heavy-grade wall covering or heave textured finish before painting shall be finished to Level 3 in accordance with GA 214. Walls and ceilings without critical lighting to receive flat paints, light textures, or wall coverings shall be finished to Level 4 in accordance with GA 214. Unless otherwise specified, all gypsum board walls, partitions and ceilings shall be finished to Level 5 in accordance with GA 214. Provide joint, fastener depression, and corner treatment. Do not use fiber glass mesh tape with conventional drying type joint compounds; use setting or hardening type compounds only. Provide treatment for water-resistant gypsum board as recommended by the gypsum board manufacturer.

3.4.1 Uniform Surface

Wherever gypsum board is to receive eggshell, semigloss or gloss paint finish, or where severe, up or down lighting conditions occur, finish gypsum wall surface in accordance to GA 214 Level 5. In accordance with GA 214 Level 5, apply a thin skim coat of joint compound to the entire gypsum board surface, after the two-coat joint and fastener treatment is complete

and dry.

3.5 SEALING

Seal openings around pipes, fixtures, and other items projecting through gypsum board and backer units as specified in Section 07900A JOINT SEALING. Apply material with exposed surface flush with gypsum board or cementitious backer units.

3.6 FIRE-RESISTANT ASSEMBLIES

Wherever fire-rated construction is indicated, provide materials and application methods, including types and spacing of fasteners, wall and ceiling framing in accordance with the specifications contained in UL Fire Resist Dir for the Design Number(s) indicated, or GA 600 for the File Number(s) indicated. Joints of fire-rated gypsum board enclosures shall be closed and sealed in accordance with UL test requirements or GA requirements. Penetrations through rated partitions and ceilings shall be sealed tight in accordance with tested systems. Fire ratings shall be as indicated.

3.7 PATCHING

Patch surface defects in gypsum board to a smooth, uniform appearance, ready to receive finish as specified.

3.8 SHAFT WALL FRAMING

The shaft wall system shall be installed in accordance with the system manufacturer's published instructions. Bucks, anchors, blocking and other items placed in or behind shaft wall framing shall be coordinated with electrical and mechanical work. Fireproofing materials which are damaged or removed during shaft wall construction shall be patched or replaced.

-- End of Section --

SECTION TABLE OF CONTENTS

DIVISION 09 - FINISHES

SECTION 09310

CERAMIC TILE, AND PAVER TILE

8/02

PART 1 GENERAL

1.1 REFERENCES
1.2 SUBMITTALS
1.3 DELIVERY AND STORAGE
1.4 ENVIRONMENTAL REQUIREMENTS
1.5 WARRANTY
1.6 EXTRA STOCK

PART 2 PRODUCTS

2.1 TILE
2.1.1 Porcelain Tile
2.1.2 Wall Tile
2.1.3 Accessories
2.2 SETTING-BED
2.2.1 Portland Cement
2.2.2 Sand
2.2.3 Hydrated Lime
2.3 WATER
2.4 MORTAR, GROUT, AND ADHESIVE
2.4.1 Dry-Set Portland Cement Mortar
2.4.2 Latex-Portland Cement Mortar
2.4.3 Ceramic Tile Grout
2.4.4 Organic Adhesive
2.4.5 Epoxy Resin Grout
2.4.6 Cementitious Backer Board
2.5 MARBLE THRESHOLDS

PART 3 EXECUTION

3.1 PREPARATORY WORK AND WORKMANSHIP
3.2 GENERAL INSTALLATION REQUIREMENTS
3.3 INSTALLATION OF WALL TILE
3.3.1 Dry-Set Mortar and Latex-Portland Cement Mortar
3.3.2 Organic Adhesive
3.4 INSTALLATION OF FLOOR TILE
3.4.1 Workable or Cured Mortar Bed
3.4.2 Dry-Set and Latex-Portland Cement
3.4.3 Resinous Grout
3.4.4 Ceramic Tile Grout
3.5 INSTALLATION OF MARBLE THRESHOLDS
3.6 EXPANSION JOINTS
3.6.1 Walls
3.6.2 Floors
3.7 CLEANING AND PROTECTING

-- End of Section Table of Contents --

UFGS-09310 (August 2002)

SECTION 09310

CERAMIC TILE, AND PAVER TILE
8/02

PART 1 GENERAL

1.1 REFERENCES

The publications listed below form a part of this specification to the extent referenced. The publications are referred to in the text by basic designation only.

AMERICAN NATIONAL STANDARDS INSTITUTE (ANSI)

ANSI A108.1	(1999) Installation of Ceramic Tile; including A108.1A-C, 108.4-.13, 118.1-.10, A136.1
ANSI A137.1	(1988) Ceramic Tile

AMERICAN SOCIETY FOR TESTING AND MATERIALS (ASTM)

ASTM C 144	(1999) Aggregate for Masonry Mortar
ASTM C 150	(1999a) Portland Cement
ASTM C 206	(1984; R 1997) Finishing Hydrated Lime
ASTM C 207	(1991; R 1997) Hydrated Lime for Masonry Purposes
ASTM C 241	(1997) Abrasion Resistance of Stone Subjected to Foot Traffic
ASTM C 373	(1988; R 1994) Water Absorption, Bulk Density, Apparent Porosity, and Apparent Specific Gravity of Fired Whiteware Products
ASTM C 482	(1981; R 1996) Bond Strength of Ceramic Tile to Portland Cement
ASTM C 501	(1984; R 1996) Relative Resistance to Wear of Unglazed Ceramic Tile by the Taber Abraser
ASTM C 648	(1998) Breaking Strength of Ceramic Tile
ASTM C 1026	(1987; R 1996) Measuring the Resistance of Ceramic Tile to Freeze-Thaw Cycling
ASTM C 1027	(1999) Determining Visible Abrasion Resistance of Glazed Ceramic Tile

ASTM C 1028	(1996) Determining the Static Coefficient of Friction of Ceramic Tile and Other Like Surfaces by the Horizontal Dynamometer Pull-Meter Method

MARBLE INSTITUTE OF AMERICA (MIA)

MIA Design Manual	(1991) Design Manual IV Dimensional Stone

TILE COUNCIL OF AMERICA (TCA)

TCA Hdbk	(1997) Handbook for Ceramic Tile Installation

U.S. NATIONAL ARCHIVES AND RECORDS ADMINISTRATION (NARA)

36 CFR 1191	Americans with Disabilities Act (ADA) Accessibility Guidelines for Buildings and Facilities

1.2 SUBMITTALS

Government approval is required for submittals with a "G" designation; submittals not having a "G" designation are for information only or as otherwise designated. When used, a designation following the "G" designation identifies the office that will review the submittal for the Government. The following shall be submitted in accordance with Section 01330 SUBMITTAL PROCEDURES:

SD-03 Product Data

Tile
Setting-Bed
Mortar, Grout, and Adhesive

Manufacturer's catalog data and preprinted installation and cleaning instructions.

SD-04 Samples

Tile; G, RO
Marble Thresholds

Samples of sufficient size to show color range, pattern, type and joints.

SD-07 Certificates

Tile
Mortar, Grout, and Adhesive

Certificates indicating conformance with specified requirements. A master grade certificate shall be furnished for tile.

1.3 DELIVERY AND STORAGE

Materials shall be delivered to the project site in manufacturer's original unopened containers with seals unbroken and labels and hallmarks intact. Materials shall be kept dry, protected from weather, and stored under cover

in accordance with manufacturer's instructions.

1.4 ENVIRONMENTAL REQUIREMENTS

Ceramic tile work shall not be performed unless the substrate and ambient temperature is at least 50 degrees F and rising. Temperature shall be maintained above 50 degrees F while the work is being performed and for at least 7 days after completion of the work. When temporary heaters are used they shall be vented to the outside to avoid carbon dioxide damage to new tilework.

1.5 WARRANTY

Manufacturer's standard performance guarantees or warranties that extend beyond a 1-year period shall be provided.

1.6 EXTRA STOCK

Supply an extra two percent of each type tile used in clean and marked cartons.

PART 2 PRODUCTS

2.1 TILE

Tile shall be standard grade conforming to ANSI A137.1. Containers shall be grade sealed. Seals shall be marked to correspond with the marks on the signed master grade certificate. Tile shall be impact resistant with a minimum breaking strength for wall tile of 90 lbs and 250 lbs for floor tile in accordance with ASTM C 648. Tile for cold climate projects shall be rated frost resistant by the manufacturer as determined by ASTM C 1026. Water absorption shall be 0.50 maximum percent in accordance with ASTM C 373. Floor tile shall have a minimum coefficient of friction of 0.50 wet and dry in accordance with ASTM C 1028. Floor tile shall be Class IV-Heavy Traffic, durability classification as rated by the manufacturer when tested in accordance with ASTM C 1027for abrasion resistance as related to foot traffic. Color shall be as indicated.

2.1.1 Porcelain Tile

Porcelain tile and trim shall be unglazed with the color extending uniformly through the body of the tile. Tile size shall be nominal as indicated. Tile shall meet or exceed the following criteria: Abrasive wear in accordance with ASTM C 501 and bonding strength in accordance with ASTM C 482. Tile shall comply with 36 CFR 1191 for coefficient of friction for interior floors. Color shall be ias indicated.

2.1.2 Wall Tile

Wall tile and trim shall be porcelain tile with polished surface. Tile shall be 8 x 8 inches. Color shall be as indicated.

2.1.3 Accessories

Accessories shall be the built-in type of the same materials and finish as the wall tile. Accessories shall be provided as follows:

	Quantity	Location

a. Shelf	1	each shower

2.2 SETTING-BED

The setting-bed shall be composed of the following:

2.2.1 Portland Cement

Cement shall conform to ASTM C 150, Type I, white for wall mortar and gray for other uses.

2.2.2 Sand

Sand shall conform to ASTM C 144.

2.2.3 Hydrated Lime

Hydrated lime shall conform to ASTM C 206, Type S or ASTM C 207, Type S.

2.3 WATER

Water shall be potable.

2.4 MORTAR, GROUT, AND ADHESIVE

Mortar, grout, and adhesive shall conform to the following:

2.4.1 Dry-Set Portland Cement Mortar

ANSI A108.1.

2.4.2 Latex-Portland Cement Mortar

ANSI A108.1.

2.4.3 Ceramic Tile Grout

ANSI A108.1; latex-portland cement grout.

2.4.4 Organic Adhesive

ANSI A108.1, Type I.

2.4.5 Epoxy Resin Grout

ANSI A108.1.

2.4.6 Cementitious Backer Board

Cementitious backer units, for use as tile substrate over wood sub-floors, shall be in accordance with ANSI A108.1. Cementitious backer units shall be 1/2inch thick.

2.5 MARBLE THRESHOLDS

Marble thresholds shall be of size required by drawings or conditions. Marble shall be Group A as classified by MIA Design Manual. Marble shall have a fine sand-rubbed finish and shall be gray in color as approved by the Contracting Officer. Marble abrasion shall be not less than 12.0 when

tested in accordance with ASTM C 241.

PART 3 EXECUTION

3.1 PREPARATORY WORK AND WORKMANSHIP

Surface to receive tile shall be inspected and shall conform to the requirements of ANSI A108.1 for surface conditions for the type setting bed specified and for workmanship. Variations of surface to be tiled shall fall within maximum values shown below:

TYPE	WALLS	FLOORS
Dry-Set Mortar	1/8 inch in 8 ft.	1/8 inch in 10 ft.
Organic Adhesives	1/8 inch in 8 ft.	1/16 inch in 3 ft.
Latex portland cement mortar	1/8 inch in 8 ft.	1/8 inch in 10 ft.
Epoxy	1/8 inch in 8 ft.	1/8 inch in 10 ft.

3.2 GENERAL INSTALLATION REQUIREMENTS

Tile work shall not be started until roughing in for mechanical and electrical work has been completed and tested, and built-in items requiring membrane waterproofing have been installed and tested. Floor tile installation shall not be started in spaces requiring wall tile until after wall tile has been installed. Tile in colors and patterns indicated shall be applied in the area shown on the drawings. Tile shall be installed with the respective surfaces in true even planes to the elevations and grades shown. Special shapes shall be provided as required for sills, jambs, recesses, offsets, external corners, and other conditions to provide a complete and neatly finished installation. Tile bases and coves shall be solidly backed with mortar.

3.3 INSTALLATION OF WALL TILE

Wall tile shall be installed in accordance with the TCA Hdbk, method W243 except as indicated otherwise, W244 at showers.

3.3.1 Dry-Set Mortar and Latex-Portland Cement Mortar

Dry-set or Latex-portland cement shall be used to install tile in accordance with ANSI A108.1. Latex portland cement shall be used when installing porcelain ceramic tile.

3.3.2 Organic Adhesive

Organic adhesive installation of ceramic tile shall conform to ANSI A108.1.

3.4 INSTALLATION OF FLOOR TILE

Floor tile shall be installed in accordance with TCA Hdbk, method F101 for exterior, F112 for interior, F115 for kitchens. Shower receptors shall be installed in accordance with TCA Hdbk, method B415.

3.4.1 Workable or Cured Mortar Bed

Floor tile shall be installed over a workable mortar bed or a cured mortar bed at the option of the Contractor. Workable mortar bed materials and installation shall conform to ANSI A108.1. Cured mortar bed and materials shall conform to ANSI A108.1. Joints between quarry tile shall be between

1/4 inch and 3/8 inch in width and shall be uniform in width.

3.4.2 Dry-Set and Latex-Portland Cement

Dry-set or Latex-portland cement mortar shall be used to install tile directly over properly cured, plane, clean concrete slabs in accordance with ANSI A108.1. Latex portland cement shall be used when installing porcelain ceramic tile.

3.4.3 Resinous Grout

When resinous grout is indicated, quarry tile shall be grouted with either furan or epoxy resin grout. Joints shall be raked and cleaned to the full depth of the tile and neutralized when recommended by the resin manufacturer. Epoxy resin grout shall be installed in conformance with ANSI A108.1. Installation of resin grout shall be in strict accordance with manufacturer's instructions for proportioning, mixing, installing, and curing. Recommended temperature shall be maintained in the area and on the surface to be grouted. After grouting, tile shall be left free of grout stain.

3.4.4 Ceramic Tile Grout

Ceramic Tile grout shall be prepared and installed in accordance with ANSI A108.1.

3.5 INSTALLATION OF MARBLE THRESHOLDS

Thresholds shall be installed where indicated in a manner similar to that of the ceramic tile floor. Thresholds shall be the full width of the opening. Head joints at ends shall not exceed 1/4 inch in width and shall be grouted full as specified for ceramic tile.

3.6 EXPANSION JOINTS

Joints shall be formed as indicated and sealed as specified in Section 07900A JOINT SEALING.

3.6.1 Walls

Expansion joints shall be provided at control joints in backing material. Wherever backing material changes, an expansion joint shall be installed to separate the different materials.

3.6.2 Floors

Expansion joints shall be provided over construction joints, control joints, and expansion joints in concrete slabs. Expansion joints shall be provided where tile abuts restraining surfaces such as perimeter walls, curbs and columns and at intervals of 24 to 36 feet each way in large interior floor areas and 12 to 16 feet each way in large exterior areas or areas exposed to direct sunlight or moisture. Expansion joints shall extend through setting-beds and fill.

3.7 CLEANING AND PROTECTING

Upon completion, tile surfaces shall be thoroughly cleaned in accordance with manufacturer's approved cleaning instructions. Acid shall not be used for cleaning glazed tile. Floor tile with resinous grout or with factory

mixed grout shall be cleaned in accordance with instructions of the grout manufacturer. After the grout has set, tile wall surfaces shall be given a protective coat of a noncorrosive soap or other approved method of protection. Tiled floor areas shall be covered with building paper before foot traffic is permitted over the finished tile floors. Board walkways shall be laid on tiled floors that are to be continuously used as passageways by workmen. Damaged or defective tiles shall be replaced.

-- End of Section --

SECTION TABLE OF CONTENTS

DIVISION 09 - FINISHES

SECTION 09510

ACOUSTICAL CEILINGS

07/02

PART 1 GENERAL

1.1 REFERENCES
1.2 SUBMITTALS
1.3 GENERAL REQUIREMENTS
1.3.1 Fire Performance
1.3.2 Ceiling Sound Absorption
1.3.3 Light Reflectance
1.4 DELIVERY AND STORAGE
1.5 ENVIRONMENTAL REQUIREMENTS
1.6 SCHEDULING
1.7 WARRANTY

PART 2 PRODUCTS

2.1 ACOUSTICAL UNITS
2.1.1 Units for Exposed-Grid System (ATC 1)
2.1.1 Units for Exposed-Grid System (ATC 2)
2.2 SUSPENSION SYSTEM
2.3 HANGERS
2.3.1 Wires
2.4 FINISHES

PART 3 EXECUTION

3.1 INSTALLATION
3.1.1 Suspension System
3.1.1.1 Plumb Hangers
3.1.1.2 Splayed Hangers
3.1.2 Wall Molding
3.1.3 Acoustical Units
3.2 CLEANING

-- End of Section Table of Contents --

UFGS-09510 (July 2002)

SECTION 09510

ACOUSTICAL CEILINGS
07/02

PART 1 GENERAL

1.1 REFERENCES

The publications listed below form a part of this specification to the extent referenced. The publications are referred to within the text by the basic designation only.

AMERICAN SOCIETY FOR TESTING AND MATERIALS (ASTM)

ASTM A 641/A 641M	(1998) Zinc-Coated (Galvanized) Carbon Steel Wire
ASTM C 423	(2001) Sound Absorption and Sound Absorption Coefficients by the Reverberation Room Method
ASTM C 635	(2000) Manufacture, Performance, and Testing of Metal Suspension Systems for Acoustical Tile and Lay-In Panel Ceilings
ASTM C 636	(1996) Installation of Metal Ceiling Suspension Systems for Acoustical Tile and Lay-In Panels
ASTM E 84	(2001) Surface Burning Characteristics of Building Materials
ASTM E 795	(2000) Mounting Test Specimens During Sound Absorption Tests
ASTM E 1264	(1998) Acoustical Ceiling Products
ASTM E 1477	(1998a) Luminous Reflectance Factor of Acoustical Materials by Use of Integrating-Sphere Reflectometers

1.2 SUBMITTALS

Government approval is required for submittals with a "G" designation; submittals not having a "G" designation are for information only or as otherwise designated. When used, a designation following the "G" designation identifies the office that will review the submittal for the Government. The following shall be submitted in accordance with Section 01330 SUBMITTAL PROCEDURES:

SD-03 Product Data

Acoustical Ceiling Systems

Manufacturer's descriptive data, catalog cuts, and installation instructions. Submittals which do not provide adequate data for the product evaluation will be rejected.

SD-07 Certificates

Acoustical Units

Certificate attesting that the mineral based acoustical units furnished for the project contain recycled material and showing an estimated percent of such material.

1.3 GENERAL REQUIREMENTS

Acoustical treatment shall consist of sound controlling units mechanically mounted on a ceiling suspension system. The unit size, texture, finish, and color shall be as specified. . The location and extent of acoustical treatment shall be as shown on the approved detail drawings. Reclamation of mineral fiber acoustical ceiling panels to be removed from the job site shall be in accordance with paragraph RECLAMATION PROCEDURES.

1.3.1 Fire Performance

Flame spread of acoustical units shall be 25 or less and smoke development shall be 50 or less when tested in accordance with ASTM E 84.

1.3.2 Ceiling Sound Absorption

Determine the NRC in accordance with ASTM C 423 Method of Test.

1.3.3 Light Reflectance

Determine light reflectance factor in accordance with ASTM E 1477 Test Method.

1.4 DELIVERY AND STORAGE

Materials shall be delivered to the site in the manufacturer's original unopened containers with brand name and type clearly marked. Materials shall be carefully handled and stored in dry, watertight enclosures. Immediately before installation, acoustical units shall be stored for not less than 24 hours at the same temperature and relative humidity as the space where they will be installed in order to assure proper temperature and moisture acclimation.

1.5 ENVIRONMENTAL REQUIREMENTS

A uniform temperature of not less than 60 degrees F nor more than 85 degrees F and a relative humidity of not more than 70 percent shall be maintained for 24 hours before, during, and 24 hours after installation of acoustical units.

1.6 SCHEDULING

Interior finish work such as plastering, concrete and terrazzo work shall be complete and dry before installation. Mechanical, electrical, and other work above the ceiling line shall be completed and heating, ventilating, and air conditioning systems shall be installed and operating in order to

maintain temperature and humidity requirements.

1.7 WARRANTY

Manufacturer's standard performance guarantees or warranties that extend beyond a one year period shall be provided. Standard performance guarantee or warranty shall contain an agreement to repair or replace acoustical panels that fail within the warranty period. Failures include, but are not limited to, sagging and warping of panels; rusting and manufacturers defects of grid system.

PART 2 PRODUCTS

2.1 ACOUSTICAL UNITS

Contractor shall comply with EPA requirements in accordance with Section 01670 RECYCLED / RECOVERED MATERIALS. Acoustical units shall conform to ASTM E 1264, Class A, and the following requirements:

2.1.1 Units for Exposed-Grid System (ATC 1)

Type: III or IV (non-asbestos mineral fiber with painted finish).

Minimum NRC: 0.65; when tested on mounting Type E-400 of ASTM E 795.

Pattern: E

Nominal size: 24 by 24 inches.

Edge detail: Recessed.

Finish: Factory-applied standard finish.

Minimum LR coefficient: 0.80.

Flame Spread: Class A, 25 or less

2.1.1 Units for Exposed-Grid System (ATC 2)

Type: III or IV (non-asbestos mineral fiber with painted finish). Mylar overlay, unperforated.

Minimum NRC: 0.10; when tested on mounting Type E-400 of ASTM E 795.

Pattern: E

Nominal size: 24 by 24 inches.

Edge detail: Square.

Finish: Factory-applied standard finish with mylar overlay.

Minimum LR coefficient: 0.80.

Flame Spread: Class A, 25 or less

2.2 SUSPENSION SYSTEM

Suspension system shall be standard exposed-grid direct hung, concealed, upward access standard width flange, and shall conform to ASTM C 635 for intermediate-duty systems. Surfaces exposed to view shall be aluminum or steel with a factory-applied white baked-enamel finish. Wall molding shall have a flange of not less than 15/16 inch. Mitered corners shall be provided. Suspended ceiling framing system shall have the capability to support the finished ceiling, light fixtures, air diffusers, and accessories, as shown. The suspension system shall have a maximum deflection of 1/360 of span length.

2.3 HANGERS

Hangers and attachment shall support a minimum 300 pound ultimate vertical load without failure of supporting material or attachment.

2.3.1 Wires

Wires shall conform to ASTM A 641/A 641M, Class 1, 0.106 inches in diameter.

2.4 FINISHES

Acoustical units and suspension system members shall have manufacturer's standard textures, patterns and finishes as specified. Ceiling suspension system components shall be treated to inhibit corrosion.

PART 3 EXECUTION

3.1 INSTALLATION

Examine surfaces to receive directly attached acoustical units for unevenness, irregularities, and dampness that would affect quality and execution of the work. Areas where acoustical units will be cemented shall be free of oils, form residue, or other materials that reduce bonding capabilities of the adhesive. Interior finish work such as plastering, concrete, and terrazzo work shall be completed and dry before installation. Mechanical, electrical, and other work above the ceiling line shall be completed and approved prior to the start of acoustical ceiling installation. Acoustical work shall be provided complete with necessary fastenings, clips, and other accessories required for a complete installation. Mechanical fastenings shall not be exposed in the finished work. Hangers shall be laid out for each individual room or space. Hangers shall be placed to support framing around beams, ducts, columns, grilles, and other penetrations through ceilings. Main runners and carrying channels shall be kept clear of abutting walls and partitions. At least two main runners shall be provided for each ceiling span. Wherever required to bypass an object with the hanger wires, a subsuspension system shall be installed, so that all hanger wires will be plumb.

3.1.1 Suspension System

Suspension system shall be installed in accordance with ASTM C 636 and as specified herein. There shall be no hanger wires or other loads suspended from underside of steel decking. Where hangers are fastened to AAC panels, only anchorages approved for use in AAC panels shall be used.

3.1.1.1 Plumb Hangers

Hangers shall be plumb and shall not press against insulation covering ducts and pipes. Where lighting fixtures are supported from the suspended ceiling system, hangers shall be provided at a minimum of four hangers per fixture and located not more than 6 inches from each corner of each fixture.

3.1.1.2 Splayed Hangers

Where hangers must be splayed (sloped or slanted) around obstructions, the resulting horizontal force shall be offset by bracing, countersplaying, or other acceptable means.

3.1.2 Wall Molding

Wall molding shall be provided where ceilings abut vertical surfaces. Miter corners where wall moldings intersect or install corner caps. Wall molding shall be secured not more than 3 inches from ends of each length and not more than 16 inches on centers between end fastenings. Wall molding springs shall be provided at each acoustical unit in semi-exposed or concealed systems.

3.1.3 Acoustical Units

Acoustical units shall be installed in accordance with the approved installation instructions of the manufacturer. Edges of acoustical units shall be in close contact with metal supports, with each other, and in true alignment. Acoustical units shall be arranged so that units less than one-half width are minimized. Units in exposed-grid system shall be held in place with manufacturer's standard hold-down clips, if units weigh less than 1 psf or if required for fire resistance rating.

3.2 CLEANING

Following installation, dirty or discolored surfaces of acoustical units shall be cleaned and left free from defects. Units that are damaged or improperly installed shall be removed and new units provided as directed.

-- End of Section --

SECTION TABLE OF CONTENTS

DIVISION 09 - FINISHES

SECTION 09620A

RESILIENT ATHLETIC FLOORING

01/98

PART 1 GENERAL

1.1 REFERENCES
1.2 SUBMITTALS
1.3 QUALIFICATIONS
1.4 DELIVERY, STORAGE, AND HANDLING
1.5 WARRANTY

PART 2 PRODUCTS

2.1 SHEET RUBBER COMPOSITION FLOORING
2.2 ADHESIVES
2.3 CRACK FILLER/LEVELER FOR CONCRETE SURFACES
2.4 EDGING STRIPS
2.5 PRIMER
2.6 SEALANTS
2.7 MANUFACTURERS COLOR

PART 3 EXECUTION

3.1 PREPARATION
3.2 MOISTURE TEST
3.3 INSTALLATION
3.3.1 General Requirements
3.3.2 Sheet Rubber Composition Flooring
3.4 PROTECTION

-- End of Section Table of Contents --

SECTION 09620A

RESILIENT ATHLETIC FLOORING
01/98

PART 1 GENERAL

1.1 REFERENCES

The publications listed below form a part of this specification to the extent referenced. The publications are referred to in the text by basic designation only.

AMERICAN SOCIETY FOR TESTING AND MATERIALS (ASTM)

ASTM C 920	(1998) Elastomeric Joint Sealants
ASTM D 395	(1998) Rubber Property - Compression Set
ASTM D 412	(1998a) Vulcanized Rubber and Thermoplastic Rubbers and Thermoplastic Elastomers - Tension
ASTM D 1054	(1991) Rubber Property - Resilience Using a Rebound Pendulum

1.2 SUBMITTALS

Government approval is required for submittals with a "G" designation; submittals not having a "G" designation are for information only. When used, a designation following the "G" designation identifies the office that will review the submittal for the Government. The following shall be submitted in accordance with Section 01330 SUBMITTAL PROCEDURES:

SD-03 Product Data

Installation

Manufacturer's descriptive data and catalog cuts indicating materials of construction and physical characteristics. Installation, cleaning and maintenance instructions shall be included.

SD-04 Samples

Flooring; G, RO

Three samples minimum 9 x 11 inches of each color of flooring material required.

SD-07 Certificates

Materials

Manufacturer's certificates stating that the resilient athletic flooring materials conform to the specified requirements. Labels or markings affixed to manufacturer's products attesting that products meet requirements specified herein will be accepted in lieu of certificates.

1.3 QUALIFICATIONS

Adhesive applied and poured-in-place flooring shall be installed by an experienced floor applicator approved by the manufacturer.

1.4 DELIVERY, STORAGE, AND HANDLING

Materials shall be delivered in manufacturer's original unopened containers with labels intact. Materials shall not be delivered to the installation area or installed before all work that may damage the materials or the finished floor, such as overhead work, is completed. Materials shall be stored in a clean, dry area. Materials in storage shall be maintained at temperatures recommended by the manufacturer. Protection boards shall be stored flat and off the ground.

1.5 WARRANTY

Manufacturer's standard performance guarantees or warranties that extend beyond a one year period shall be provided.

PART 2 PRODUCTS

2.1 SHEET RUBBER COMPOSITION FLOORING

Sheet rubber flooring shall be prefabricated, homogeneous, natural and synthetic rubbers, constructed in two layers bonded together and shall be minimum 3/8 inch thick, and shall have textured all-purpose finish. Flooring shall be roll type not less than 60 inches wide. Flooring shall have a minimum tensile stress at 100 percent elongation of 220 psi and a minimum ultimate elongation of 250 percent when tested in accordance with ASTM D 412. Flooring shall be able to withstand 50 percent compression for 72 hours at 72 degrees F with a residual deformation of less than 10 percent when tested in accordance with ASTM D 395. Flooring shall provide a 55 plus or minus 5 percent rebound when tested in accordance with ASTM D 1054. Shore hardness of top layers shall be greater than bottom layer.

2.2 ADHESIVES

Adhesive shall be as recommended by the flooring manufacturer and must correspond to the specified flooring product and to the substrate.

2.3 CRACK FILLER/LEVELER FOR CONCRETE SURFACES

Crack filler/leveler for concrete floor surfaces shall be as recommended by flooring manufacturer.

2.4 EDGING STRIPS

Strips shall be of the same material and design as recommended by flooring manufacturer.

2.5 PRIMER

Concrete primer shall be as recommended by flooring manufacturer and must correspond to the specified flooring product and to the substrate.

2.6 SEALANTS

Sealants shall be in accordance with Section 07900A JOINT SEALING.

2.7 MANUFACTURERS COLOR

Color shall be as indicated.

PART 3 EXECUTION

3.1 PREPARATION

Concrete surfaces shall be completely cured and dry. No curing agents, sealers, or hardeners shall be used to aid in the curing of the concrete slab. Surfaces shall be free of paint spots, and other foreign materials. Surfaces shall be ground down or leveled with an approved leveling compound to a tolerance of plus or minus 1/8 inch within a 10 foot radius. Cracks, construction joints, or damaged portions of floor shall be filled with crack filler for concrete surfaces. Expansion joints shall be filled and sealed in accordance with the approved installation instructions of the manufacturer. All sealants shall be in accordance with ASTM C 920. Expansion joints shall not be filled with a material that will make them inoperable.

3.2 MOISTURE TEST

The suitability of the concrete subfloor for receiving the resilient flooring with regard to moisture content shall be determined by a moisture test as recommended by the flooring manufacturer.

3.3 INSTALLATION

3.3.1 General Requirements

Installation shall be in accordance with the approved installation instructions. Tile or sheet flooring shall be rolled with a medium-sized roller in both directions to release entrapped air.

3.3.2 Sheet Rubber Composition Flooring

Sheet flooring shall be dry cut and layed out flat a minimum of 24 hours prior to adhering to the substrate. End seams shall be single cut. Edge seams shall be cut through overlapping sheets, then snapped into place to ensure tight seams. Seams shall be weighted as required.

3.4 PROTECTION

The installed flooring shall be protected from soiling and damage with heavy reinforced, nonstaining kraft paper, plywood, or hardboard sheets as required. Edges of kraft paper protection shall be lapped and secured to provide a continuous cover. Protective covering shall be removed when directed by the Contracting Officer.

-- End of Section --

SECTION TABLE OF CONTENTS

DIVISION 09 - FINISHES

SECTION 09650

RESILIENT FLOORING

11/03

PART 1 GENERAL

1.1 REFERENCES
1.2 FIRE RESISTANCE REQUIREMENTS
1.3 SUBMITTALS
1.4 DELIVERY AND STORAGE
1.5 ENVIRONMENTAL REQUIREMENTS
1.6 SCHEDULING
1.7 WARRANTY

PART 2 PRODUCTS

2.1 VINYL COMPOSITION TILE
2.2 WALL BASE
2.3 MOULDING
2.4 ADHESIVES
2.5 SURFACE PREPARATION MATERIALS
2.6 POLISH/FINISH
2.7 CAULKING AND SEALANTS
2.8 MANUFACTURER'S COLOR, PATTERN AND TEXTURE

PART 3 EXECUTION

3.1 EXAMINATION/VERIFICATION OF CONDITIONS
3.2 SURFACE PREPARATION
3.3 MOISTURE, ALKALINITY AND BOND TESTS
3.4 PLACING VINYL-COMPOSITION TILE
3.5 PLACING FEATURE STRIPS
3.6 PLACING MOULDING
3.7 PLACING WALL BASE
3.8 CLEANING
3.9 PROTECTION

-- End of Section Table of Contents --

UFGS-09650 (November 2003)

SECTION 09650

RESILIENT FLOORING
11/03

PART 1 GENERAL

1.1 REFERENCES

The publications listed below form a part of this specification to the extent referenced. The publications are referred to within the text by the basic designation only.

ASTM INTERNATIONAL (ASTM)

ASTM D 4078	(2002) Water Emulsion Floor Polish
ASTM E 648	(2000) Critical Radiant Flux of Floor-Covering Systems Using a Radiant Heat Energy Source
ASTM F 710	(2003) Standard Practice for Preparing Concrete Floors to Receive Resilient Flooring
ASTM F 1066	(1999) Vinyl Composition Floor Tile
ASTM F 1482	(2003) Standard Practice for Installation and Preparation of Panel Type Underlayments to Receive Resilient Flooring
ASTM F 1861	(2002) Resilient Wall Base
ASTM F 1869	(1998) Measuring Moisture Vapor Emission Rate of Concrete Subfloor Using Anhydrous Calcium Chloride
ASTM F 2170	(2002) Standard Test Method for Determining Relative Humidity in Concrete Floor Slabs in situ Probes

SOUTH COAST AIR QUALITY MANAGEMENT DISTRICT (SCAQMD)

SCAQMD Rule #1168	(2003) Adhesive and Sealant Applications

1.2 FIRE RESISTANCE REQUIREMENTS

Flooring in corridors and exits shall have a minimum average critical radiant flux of 0.22 watts per square centimeter when tested in accordance with ASTM E 648.

1.3 SUBMITTALS

Government approval is required for submittals with a "G" designation; submittals not having a "G" designation are for information only or as

otherwise designated. When used, a designation following the "G" designation identifies the office that will review the submittal for the Government. The following shall be submitted in accordance with Section 01330 SUBMITTAL PROCEDURES:

SD-03 Product Data

Resilient Flooring and Accessories

Manufacturer's descriptive data.

Adhesives

Manufacturer's descriptive data, documentation stating physical characteristics, and mildew and germicidal characteristics. Material Safety Data Sheets (MSDS) for all primers and adhesives shall be provided to the Contracting Officer. Highlight VOC emissions.

SD-04 Samples

Resilient Flooring and Accessories;G, RO

Three samples of each indicated color and type of flooring, base, mouldings, and accessories. Sample size shall be minimum 2-1/2 x 4 inches.

SD-06 Test Reports

Moisture, Alkalinity and Bond Tests

Copy of test reports of moisture and alkalinity content of concrete slab, and bond test stating date of test, person conducting the test, and the area tested.

SD-08 Manufacturer's Instructions

Surface Preparation
Installation

Manufacturer's printed installation instructions for all flooring materials and accessories, including preparation of substrate, seaming techniques, and recommended adhesives.

SD-10 Operation and Maintenance Data

Resilient Flooring and Accessories

Data Package 1 in accordance with Section 01781 OPERATION AND MAINTENANCE DATA.

1.4 DELIVERY AND STORAGE

Materials shall be delivered to the building site in original unopened containers bearing the manufacturer's name, style name, pattern color name and number, production run, project identification, and handling instructions. Materials shall be stored in a clean dry area with temperature maintained above 68 degrees F and below 85 degrees F, and shall be stacked according to manufacturer's recommendations. Materials shall be

protected from the direct flow of heat from hot-air registers, radiators and other heating fixtures and appliances. Do not open containers until materials are to be used, except for verification inspection. Observe ventilation and safety procedures specified in the MSDS.

1.5 ENVIRONMENTAL REQUIREMENTS

Areas to receive resilient flooring shall be maintained at a temperature above 68 degrees F and below 85 degrees F for 2 days before application, during application and 2 days after application, unless otherwise directed by the flooring manufacturer for the flooring being installed. A minimum temperature of 55 degrees F shall be maintained thereafter. Observe ventilation and safety procedures specified in the MSDS. Provide adequate ventilation to remove moisture from area and to comply with regulations limiting concentrations of hazardous vapors.

1.6 SCHEDULING

Resilient flooring application shall be scheduled after the completion of other work which would damage the finished surface of the flooring.

1.7 WARRANTY

Manufacturer's standard performance guarantees or warranties that extend beyond a one year period shall be provided.

PART 2 PRODUCTS

2.1 VINYL COMPOSITION TILE

Vinyl-composition tile shall conform to ASTM F 1066, Class 2, (through pattern tile), Composition 1, asbestos-free, and shall be 12 inches square and 1/8 inch thick. Tile shall have the color and pattern uniformly distributed throughout the thickness of the tile.

2.2 WALL BASE

Base shall conform to ASTM F 1861, Type TS (vulcanized thermoset rubber) or Type TP (thermoplastic rubber), or Type TV (thermoplastic vinyl), Style B (coved - installed with resilient flooring). Base shall be 4 inches high and a minimum 1/8 inch thick. Preformed corners in matching height, shape, and color shall be furnished.

2.3 MOULDING

Provide tapered mouldings of vinyl or rubber and types as recommended by flooring manufacturer for both edges and transitions of flooring materials specified. Vertical lip on moulding shall not be greater than 1/4 inch. Change in level between 1/4 and 1/2 inch shall be beveled with a slope no greater than 1:2.

2.4 ADHESIVES

Adhesives for flooring, base and accessories shall be as recommended by the manufacturer and comply with Section 01335 SUSTAINABLE DESIGN AND DEVELOPMENT and local indoor air quality standards. VOC content must be less than the current VOC content limits of SCAQMD Rule #1168.

2.5 SURFACE PREPARATION MATERIALS

Surface preparation materials, such as panel type underlayment, lining felt, and floor crack fillers shall be as recommended by the flooring manufacturer for the subfloor conditions. Panel type underlayment products shall comply with ASTM F 1482.

2.6 POLISH/FINISH

Polish shall be as recommended by the manufacturer and conform to ASTM D 4078.

2.7 CAULKING AND SEALANTS

Caulking and sealants shall be in accordance with Section 07900A JOINT SEALOMG.

2.8 MANUFACTURER'S COLOR, PATTERN AND TEXTURE

Color, pattern and texture for resilient flooring and accessories shall be as indicated on the drawings. Color listed is not intended to limit the selection of equal colors from other manufacturers. Floor patterns shall be as specified in the drawings. Flooring in any one continuous area or replacement of damaged flooring in continuous area shall be from same production run with same shade and pattern.

PART 3 EXECUTION

3.1 EXAMINATION/VERIFICATION OF CONDITIONS

The Contractor shall examine and verify that site conditions are in agreement with the design package and shall report all conditions that will prevent a proper installation. The Contractor shall not take any corrective action without written permission from the Government. Work will proceed only when conditions have been corrected and accepted by the installer.

3.2 SURFACE PREPARATION

Flooring shall be in a smooth, true, level plane, except where indicated as sloped. Floor shall be flat to within 3/16 inch in 10 feet. Subfloor shall be prepared in accordance with flooring manufacturers recommended instructions. The surfaces of lightweight concrete slabs (as defined by the flooring manufacturer) shall be prepared as recommended by the flooring manufacturer. Concrete subfloor preparation shall comply with ASTM F 710. Floor fills or toppings may be required as recommended by the flooring manufacturer. Underlayments when required by the flooring manufacturer shall be installed in accordance with manufacturer's recommended installation instructions. Panel type underlayments shall comply with ASTM F 1482. Before any work under this section is begun, all defects such as rough or scaling concrete, chalk and dust, cracks, low spots, high spots, and uneven surfaces shall have been corrected, and all damaged portions of concrete slabs shall have been repaired as recommended by the flooring manufacturer. Concrete curing and sealer compounds, other than the type that does not adversely affect adhesion, shall be entirely removed from the slabs. Paint, varnish, oils, release agents, sealers, waxers, and adhesives shall be removed, as recommended by the flooring manufacturer.

3.3 MOISTURE, ALKALINITY AND BOND TESTS

The suitability of the concrete subfloor for receiving the resilient flooring with regard to moisture content and pH level shall be determined by moisture and alkalinity tests and shall comply with manufacturers recommendations. Moisture testing shall be in accordance with ASTM F 1869 or ASTM F 2170 unless otherwise recommended by the flooring manufacturer. Alkalinity testing shall be as recommended by the flooring manufacturer. The compatibility of the resilient flooring adhesives to the concrete floors shall be determined by a bond test in accordance with the flooring manufacturers recommendations.

3.4 PLACING VINYL-COMPOSITION TILE

Tile flooring and accessories shall be installed in accordance with manufacturer's installation instructions. Adhesives shall be prepared and applied in accordance with manufacturer's directions. Tile lines and joints shall be kept square, symmetrical, tight, and even. Keep each floor in true, level plane, except where slope is indicated. Edge width shall vary as necessary to maintain full-size tiles in the field, but no edge tile shall be less than one-half the field tile size, except where irregular shaped rooms make it impossible. Flooring shall be cut to, and fitted around, all permanent fixtures, built-in furniture and cabinets, pipes, and outlets. Edge tile shall be cut, fitted, and scribed to walls and partitions after field flooring has been applied.

3.5 PLACING FEATURE STRIPS

Feature strips shall be installed in accordance with manufacturer's installation instructions. Adhesives shall be prepared and applied in accordance with manufacturers directions.

3.6 PLACING MOULDING

Provide moulding where flooring termination is higher than the adjacent finished flooring and at transitions between different flooring materials. When required, locate moulding under door centerline. Moulding is not required at doorways where thresholds are provided. Moulding shall be secured with adhesive as recommended by the manufacturer. Adhesives shall be prepared and applied in accordance with manufacturers directions.

3.7 PLACING WALL BASE

Wall base shall be installed in accordance with manufacturer's installation instructions. Adhesives shall be prepared and applied in accordance with manufacturers directions. Base joints shall be tight and base shall be even with adjacent resilient flooring. Voids along the top edge of base at masonry walls shall be filled with caulk. Roll entire vertical surface of base with hand roller, and press toe of base with a straight piece of wood to ensure proper alignment. Avoid excess adhesive in corners. Voids along the top edge of base at masonry walls shall be filled with caulk.

3.8 CLEANING

Immediately upon completion of installation of flooring in a room or an area, flooring and adjacent surfaces shall be dry-cleaned to remove all surplus adhesive. Clean flooring as recommended in accordance with manufacturer's printed maintenance instructions. No sooner than 5 days after installation, flooring shall be washed with a nonalkaline cleaning

solution, rinsed thoroughly with clear cold water, and, except for rubber flooring and stair treads, risers and stringers, vinyl and other flooring not requiring polish by manufacturer, given the number of coats of polish in accordance with manufacturers written instructions. All other flooring shall be cleaned and maintained as recommended by the manufacturer.

3.9 PROTECTION

From the time of laying until acceptance, flooring shall be protected from damage as recommended by the flooring manufacturer. Flooring which becomes damaged, loose, broken, or curled and wall base which is not tight to wall or securely adhered shall be removed and replaced.

-- End of Section --

SECTION TABLE OF CONTENTS

DIVISION 09 - FINISHES

SECTION 09670

FLUID-APPLIED FLOORING

11/03

PART 1 GENERAL

1.1 REFERENCES
1.2 SUBMITTALS
1.3 DELIVERY AND STORAGE
1.4 ENVIRONMENTAL CONDITIONS
1.5 PROTECTION
1.6 QUALIFICATIONS OF INSTALLER

PART 2 PRODUCTS

2.1 MATERIALS
2.1.1 Primer
2.1.2 Aggregate
2.1.3 Binder
2.1.4 Fillers
2.1.5 Top Coating
2.2 FLOORING SYSTEMS
2.2.1 Epoxy Matrix Floor Surfacing
2.3 SEALER AND RESIN
2.4 ANTIMICROBIAL
2.5 WALL BASE
2.5.1 Self-Coving
2.6 COLOR

PART 3 EXECUTION

3.1 SURFACE PREPARATION
3.1.1 Concrete Surfaces
3.1.1.1 Acid Etching
3.1.1.2 Air Drying
3.1.2 Filling Cracks, Spalls, Joints, and Other Depressions
3.2 MIXING
3.3 APPLICATION
3.3.1 Primer
3.3.2 Floor Surfacing
3.3.3 Seal Coat
3.4 PROTECTION

-- End of Section Table of Contents --

SECTION 09670

FLUID-APPLIED FLOORING
11/03

PART 1 GENERAL

1.1 REFERENCES

The publications listed below form a part of this specification to the extent referenced. The publications are referred to within the text by the basic designation only.

ACI INTERNATIONAL (ACI)

ACI 503R	(1993) Use of Epoxy Compounds with Concrete

ASTM INTERNATIONAL (ASTM)

ASTM C 307	(1999) Tensile Strength of Chemical-Resistant Mortars, Grouts, and Monolithic Surfacings
ASTM C 413	(2001) Absorption of Chemical-Resistant Mortars, Grouts, and Monolithic Surfacings and Polymer Concretes
ASTM C 531	(2000) Linear Shrinkage and Coefficient of Thermal Expansion of Chemical-Resistant Mortars, Grouts, and Monolithic Surfacings, and Polymer Concretes
ASTM C 579	(2001) Compressive Strength of Chemical-Resistant Mortars, Grouts, Monolithic Surfacings, and Polymer Concretes
ASTM C 580	(2002) Flexural Strength and Modulus of Elasticity of Chemical-Resistant Mortars, Grouts, Monolithic Surfacings, and Polymer Concretes
ASTM D 1308	(2002) Effect of Household Chemicals on Clear and Pigmented Organic Finishes
ASTM D 4060	(2001) Abrasion Resistance of Organic Coatings by the Taber Abraser
ASTM E 162	(2002a) Surface Flammability of Materials Using a Radiant Heat Energy Source

THE NATIONAL ARCHIVES AND RECORDS ADMINISTRATION (NARA)

29 CFR 1910-SUBPART Z	Toxic and Hazardous Substances

NATIONAL TERRAZZO & MOSAIC ASSOCIATION (NTMA)

NTMA Info Guide (2000) Terrazzo Information Guide

1.2 SUBMITTALS

Government approval is required for submittals with a "G" designation; submittals not having a "G" designation are for information only or as otherwise designated. When used, a designation following the "G" designation identifies the office that will review the submittal for the Government. The following shall be submitted in accordance with Section 01330 SUBMITTAL PROCEDURES:

SD-02 Shop Drawings

Flooring

Drawings indicating the type and layout of the floor system.

SD-03 Product Data

Sealer and Resin
Floor Surfacing
Mixing

Flooring manufacturer's descriptive data, mixing, proportioning, and installation instructions. Maintenance literature for resinous flooring shall be included.

SD-04 Samples

Flooring Systems; G, RO

Cured samples of each floor finish or color combination.

SD-07 Certificates

Qualifications of Installer

A written statement from the floor manufacturer that the installer is acceptable.

SD-08 Manufacturer's Instructions

Application

Complete instructions for application of flooring system including any precautions or special handling instructions required to comply with OSHA 29 CFR 1910-SUBPART Z.

SD-10 Operation and Maintenance Data

Flooring Data Package 1

Data package 2,in accordance with Section 01781 OPERATION AND MAINTENANCE DATA.

1.3 DELIVERY AND STORAGE

Deliver the materials to the project site in unopened bags and containers clearly labeled with the name of the manufacturer, type of material, batch number, and date of manufacture. Store materials, other than aggregates, away from fire, sparks, or smoking areas. Maintain the storage area between 50 and 90 degrees F.

1.4 ENVIRONMENTAL CONDITIONS

Maintain the ambient room and floor temperatures at 65 degrees F, or above, for a period extending from 48 hours before installation until one week after installation. Concrete to receive surfacing shall have cured for at least 28 days and shall have been free of water for at least 7 days. Wood substrates shall have a measured moisture content of between 8 and 10 percent prior to application.

1.5 PROTECTION

Protect adjacent surfaces not scheduled to receive the flooring by masking, or by other means, to maintain these surfaces free of the flooring material.

1.6 QUALIFICATIONS OF INSTALLER

Installation shall be performed by an applicator approved by the manufacturer of the floor surfacing materials. The Contractor shall furnish a written statement from the manufacturer that the installer is acceptable.

PART 2 PRODUCTS

2.1 MATERIALS

Materials (except aggregate) used in the flooring shall be the products of a single manufacturer. Industrial resin-based flooring shall be trowel applied type epoxy finish of 1/4 inch thickness with properties and chemical resistance conforming to the requirements specified in NTMA Info Guide. Materials shall meet the following requirements:

2.1.1 Primer

Type recommended by the manufacturer to penetrate into the pores of the substrate and bond with the floor surfacing matrix to form a permanent monolithic bond between substrate and surfacing matrix.

2.1.2 Aggregate

Aggregate shall be angular, translucent quartz covered with a colored inorganic coating as selected from manufacturer's standard aggregates.

2.1.3 Binder

Binder shall be thermo-setting epoxy.

2.1.4 Fillers

Fillers, if required, shall be inert silica, quartz or other hard aggregate material as recommended by the flooring manufacturer. Fillers shall be furnished in the quantity necessary to impart the required color and

physical characteristics. The filler shall contain sufficient fines to provide an even-textured, nonslip type of surface on the finished topping.

2.1.5 Top Coating

Furnish clear coating of type recommended by the manufacturer.

2.2 FLOORING SYSTEMS

The complete systems, after curing, shall have the following properties when tested in accordance with the test methods listed for each property.

2.2.1 Epoxy Matrix Floor Surfacing

a. Compressive Strength: ASTM C 579; 10,000 psi minimum at 7 days.

b. Tensile Strength: ASTM C 307; 600 psi minimum at 7 days.

c. Flexural Modulus of Elasticity: ASTM C 580; 250,000 psi minimum at 7 days.

d. Thermal Coefficient of Expansion: ASTM C 531; 0.00004 inches per inch per degree F maximum.

e. Shrinkage: ASTM C 531; 0.5 percent maximum.

f. Bond Strength: ACI 503R, 300 psi minimum with 100 percent concrete failure (2500 psi Compressive Strength Concrete).

g. Flame Spread Index: ASTM E 162; 25 maximum.

h. Smoke Deposited: ASTM E 162; 4 mg maximum.

i. Abrasion Resistance: ASTM D 4060; 15 mg maximum weight loss.

j. Moisture Absorption: ASTM C 413; 1.0 percent maximum.

k. Chemical Resistance: ASTM D 1308; no effect when exposed to the following reagents for 7 days:

Acetic acid: 5 percent solution
Ammonium Hydroxide: 10 percent solution
Citric Acid: 5 percent solution
Coffee
Coca Cola Syrup
Isopropyl Alcohol
Mineral Oil
Sodium Hydroxide: 5 percent solution
Tri-Sodium Phosphate: 5 percent solution
Urea: 6.6 percent solution

2.3 SEALER AND RESIN

Sealer shall be a product recommended by the industrial resin-based flooring manufacturer; when applied to the resin topping and dry, it shall be nonslip and resistant to staining. Resin shall be suitable for the type application indicated.

2.4 ANTIMICROBIAL

Industrial resin-based flooring in the disinfection rooms shall be treated to be resistant to fungi and bacteria.

2.5 WALL BASE

2.5.1 Self-Coving

Self-coving shall consist of industrial resin-based flooring coved up at the base as shown. Coved base shall be the same thickness as the flooring.

2.6 COLOR

Color shall be as indicated.

PART 3 EXECUTION

3.1 SURFACE PREPARATION

3.1.1 Concrete Surfaces

3.1.1.1 Acid Etching

Apply a 10 percent solution of muriatic acid at a rate of one quart per each 10 square feet of concrete surface. Allow the solution to stand until it stops bubbling but not less than 5 minutes. Remove the acid and wash the surfaces several times, as required, to remove all traces of the acid. Always dilute acid by pouring into water. Use face shield rubber gloves, and other safety equipment when using acids, alkalies, or solvents.

3.1.1.2 Air Drying

After cleaning, allow concrete surface to air dry thoroughly prior to application of surfacing. Blowers or oil free compressed air may be used. Do not use flame-drying methods. Prior to application of surfacing, test concrete surface for excessive moisture in at least two locations. Place rubber mats at each location with smooth side against concrete and place weight on top of mat to hold in position and ensure contact with concrete. Polyethylene with all edges taped may be used in lieu of mats. After 8 hours remove mat or sheeting and examine floor surface for moisture accumulation. If tests indicate accumulation of moisture at either location, additional air drying shall be undertaken until additional tests show no moisture accumulation.

3.1.2 Filling Cracks, Spalls, Joints, and Other Depressions

Fill all cracks, joints, spalls, and other depressions in the substrate with a latex underlayment, as recommended by the manufacturer compatible with the floor surfacing material.

3.2 MIXING

Proportion and mix the floor surfacing components in accordance with the manufacturer's instructions.

3.3 APPLICATION

Apply primer, floor surfacing, and seal coat in accordance with the

manufacturer's recommendations and the following requirements.

3.3.1 Primer

Apply primer uniformly over the entire area to receive floor surfacing using clean rubber squeegees or clean steel trowels. Do not allow primer to collect in depressions. Allow primer to dry thoroughly before the next coat is applied. Reprime porous areas or areas where primer has dried.

3.3.2 Floor Surfacing

Apply mixed surfacing material to provide a finish floor surfacing not less than 1/4 inch thick. The entire surfacing in any one room or area shall be one continuous operation except for placement of divider strips at structural floor control joints or as indicated. All surfaces shall be flush, true to plane and line, and level within 1/4 inch in 10 feet.

3.3.3 Seal Coat

Apply seal coat uniformly covering all surfaces after floor surfacing has cured and as recommended by the supplier.

3.4 PROTECTION

Surfacing shall set for a minimum period of 48 hours before traffic is allowed on the floor. Finished flooring shall be protected from traffic by covering with 30 pound building paper or other equally effective means until final acceptance of the project.

-- End of Section --

SECTION TABLE OF CONTENTS

DIVISION 09 - FINISHES

SECTION 09680

CARPET

11/03

PART 1 GENERAL

1.1 REFERENCES
1.2 SUBMITTALS
1.3 REGULATORY REQUIREMENTS
1.4 DELIVERY AND STORAGE
1.5 ENVIRONMENTAL REQUIREMENTS
1.6 WARRANTY

PART 2 PRODUCTS

2.1 CARPET
2.1.1 Physical Characteristics
2.1.1.1 BROADLOOM CARPET CPT1
2.1.1.1 BROADLOOM CARPET CPT2
2.1.1.2 MODULAR TILE CARPET CPT3
2.1.1.2 MODULAR TILE CARPET CPT4
2.2 Performance Requirements
2.3 ADHESIVES AND CONCRETE PRIMER
2.4 MOLDING
2.5 TAPE
2.6 COLOR, TEXTURE, AND PATTERN

PART 3 EXECUTION

3.1 SURFACE PREPARATION
3.2 MOISTURE AND ALKALINITY TESTS
3.3 PREPARATION OF CONCRETE SUBFLOOR
3.4 INSTALLATION
3.4.1 Broadloom Installation
3.4.2 Modular Tile Installation
3.5 CLEANING AND PROTECTION
3.5.1 Cleaning
3.5.2 Protection
3.6 REMNANTS

-- End of Section Table of Contents --

UFGS-09680 (November 2003)

SECTION 09680

CARPET
11/03

PART 1 GENERAL

1.1 REFERENCES

The publications listed below form a part of this specification to the extent referenced. The publications are referred to in the text by the basic designation only.

AMERICAN ASSOCIATION OF TEXTILE CHEMISTS AND COLORISTS (AATCC)

AATCC 16	(1998) Test Method: Colorfastness to Light
AATCC 134	(2001) Test Method: Electrostatic Propensity of Carpets
AATCC 165	(1999) Test Method: Colorfastness to Crocking: Carpets - AATCC Crockmeter Method

AMERICAN SOCIETY FOR TESTING AND MATERIALS (ASTM)

ASTM D 418	(1993; R 1997) Pile Yarn Floor Covering Construction
ASTM D 1423	(2002) Twist in Yarns by the Direct-Counting Method
ASTM D 3278	(1996e1) Test Methods for Flash Point of Liquids by Small Scale Closed-Cup Apparatus
ASTM D 5252	(2001) Practice for the Operation of the Hexapod Tumble Drum Tester
ASTM D 5417	(1999) Practice for Operation of the Vettermann Drum Tester
ASTM D 5793	(1995) Standard Test Method for Binding Sites Per Unit Length or Width of Pile Yarn Floor Coverings
ASTM D 5848	(1999) Standard Test Method for Mass Per Unit Area of Pile Yarn Floor Coverings
ASTM E 648	(2000) Critical Radiant Flux of Floor-Covering Systems Using a Radiant Heat Energy Source

CARPET AND RUG INSTITUTE (CRI)

CRI 104	(2002) Commercial Carpet Installation

Standard

U.S. NATIONAL ARCHIVES AND RECORDS ADMINISTRATION (NARA)

16 CFR 1630	Standard for the Surface Flammability of Carpet and Rugs (FF 1-70)
40 CFR 247	Comprehensive Procurement Guideline for Products Containing Recovered Materials

INTERNATIONAL ORGANIZATION FOR STANDARDIZATION (ISO)

ISO 2551	(1981) Machine-made Textile Floor Coverings - Determination of Dimensional Changes Due to the Effect of Varied Water and Heat Conditins (AACHEN Test)

1.2 SUBMITTALS

Government approval is required for submittals with a "G" designation; submittals not having a "G" designation are for information only or as otherwise designated. When used, a designation following the "G" designation identifies the office that will review the submittal for the Government. The following shall be submitted in accordance with Section 01330 SUBMITTAL PROCEDURES:

SD-02 Shop Drawings

Installation
Molding

Three copies of drawings indicating areas receiving carpet, carpet types, textures and patterns, direction of pile, location of seams, and locations of edge molding.

SD-03 Product Data

Carpet

Manufacturer's catalog data and printed documentation stating physical characteristics, durability, resistance to fading, and flame resistance characteristics for each type of carpet material and installation accessory.

Surface Preparation
Installation

Three copies of the manufacturer's printed installation instructions for the carpet, including preparation of substrate, seaming techniques, and recommended adhesives and tapes.

Environmental and Regulatory Requirements

Three copies of report stating that carpet contains recycled materials and/or involvement in a recycling or reuse program. Report shall include percentage of recycled material.

SD-04 Samples

Carpet;G, RO
Molding;G, RO

a. Carpet: Two "Production Quality" samples 18 x 18 inches of each carpet proposed for use, showing quality, pattern, and color specified.

b. Vinyl or Aluminum Moldings: Two pieces of each type at least 12 inches long.

SD-06 Test Reports

Moisture and Alkalinity Tests

Three copies of test reports of moisture and alkalinity content of concrete slab stating date of test, person conducting the test, and the area tested.

SD-07 Certificates

Carpet

Certificates of compliance from a laboratory accredited by the National Laboratory Accreditation Program of the National Institute of Standards and Technology attesting that each type of carpet and carpet with cushion material conforms to the standards specified.

Regulatory Requirements

Report stating that the carpet contains recycled materials and indicating the actual percentage of recycled material.

SD-10 Operation and Maintenance Data

Carpet
Cleaning and Protection

Three copies of carpet manufacturer's maintenance instructions describing recommended type of cleaning equipment and material, spotting and cleaning methods, and cleaning cycles.

1.3 REGULATORY REQUIREMENTS

Carpet and adhesives shall bear the Carpet and Rug Institute (CRI) Indoor Air Quality (IAQ) label or demonstrate compliance with testing criteria and frequencies through independent laboratory test results. Carpet type bearing the label will indicate that the carpet has been tested and meets the criteria of the CRI IAQ Carpet Testing Program, and minimizes the impact on indoor air quality. Contractor shall procure carpet in accordance with 40 CFR 247. Carpet shall conform to EPA requirements in accordance with Section 01670 RECYCLED / RECOVERED MATERIALS. Where possible, product shall be purchased locally to reduce emissions of fossil fuels from transporting.

1.4 DELIVERY AND STORAGE

Materials shall be delivered to the site in the manufacturer's original wrappings and packages clearly labeled with the manufacturer's name, brand

name, size, dye lot number, and related information. Materials shall be stored in a clean, dry, well ventilated area, protected from damage and soiling, and shall be maintained at a temperature above 60 degrees F for 2 days prior to installation.

1.5 ENVIRONMENTAL REQUIREMENTS

Areas in which carpeting is to be installed shall be maintained at a temperature above 60 degrees F for 2 days before installation, during installation, and for 2 days after installation. A minimum temperature of 55 degrees F shall be maintained thereafter for the duration of the contract. Traffic or movement of furniture or equipment in carpeted area shall not be permitted for 24 hours after installation. Other work which would damage the carpet shall be completed prior to installation of carpet. Carpet and adhesives shall meet Green Seal certification requirements and be appropriately lsited and labeled.

1.6 WARRANTY

Manufacturer's standard performance guarantees or warranties including minimum ten (10) year wear warranty, two (2) year material and workmanship and ten (10) year tuft bind and delamination.

PART 2 PRODUCTS

2.1 CARPET

Carpet shall be first quality; free of visual blemishes, streaks, poorly dyed areas, fuzzing of pile yarn, spots or stains, and other physical and manufacturing defects. Carpet materials and treatments shall be reasonably nonallergenic and free of other recognized health hazards. All grade carpets shall have a static control construction which gives adequate durability and performance. Carpet shall bear the Carpet and Rug Institute (CRI) Indoor Air Quality (IAQ) Label. Carpet type bearing the label will indicate that carpet has been tested and meets the criteria of the CRI Green Label Requirements for Indoor Air Quality Test Criteria.

2.1.1 Physical Characteristics

2.1.1.1 BROADLOOM CARPET CPT1

Carpet shall comply with the following:

a. Carpet Construction: Tufted.

b. Type: Broadloom 12 feet minimum usable carpet width.

c. Pile Type: Multilevel loop.

d. Pile Fiber: Commercial 100% branded (federally registered trademark) nylon continuous filament.

e. Pile or Wire Height: Minimum 0.093 inch, maximum 0.218 in accordance with ASTM D 418.

f. Yarn Ply: Minimum 2.

g. Gauge or Pitch: Minimum 1/10 inch in accordance with ASTM D 5793.

h. Stitches or Rows/Wires: Minimum 130 per square inch.

i. Finished Pile Yarn Weight: Minimum 28 ounces per square yard. This does not include weight of backings. Weight shall be determined in accordance with ASTM D 5848.

j. Pile Density: Minimum 5600.

k. Dye Method: Solution dyed.

l. Backing Materials: Primary backing materials shall be those customarily used and accepted by the trade for each type of carpet. Secondary backing to suit project requirements shall be those customarily used and accepted by the trade for each type of carpet, except when a special unitary back designed for gluedown is provided.

2.1.1.1 BROADLOOM CARPET CPT2

Carpet shall comply with the following:

a. Carpet Construction: Tufted.

b. Type: Broadloom 12 feet minimum usable carpet width.

c. Pile Type: Multilevel loop.

d. Pile Fiber: Commercial 100% branded (federally registered trademark) nylon continuous filament.

e. Pile or Wire Height: Minimum 0.062 inch, maximum 0.28 in accordance with ASTM D 418.

f. Yarn Ply: Minimum 2.

g. Gauge or Pitch: Minimum 1/12 inch in accordance with ASTM D 5793.

h. Stitches or Rows/Wires: Minimum 144 per square inch.

i. Finished Pile Yarn Weight: Minimum 32 ounces per square yard. This does not include weight of backings. Weight shall be determined in accordance with ASTM D 5848.

m. Pile Density: Minimum 7680.

k. Dye Method: Solution dyed.

l. Backing Materials: Primary backing materials shall be those customarily used and accepted by the trade for each type of carpet. Secondary backing to suit project requirements shall be those customarily used and accepted by the trade for each type of carpet, except when a special unitary back designed for gluedown is provided.

2.1.1.2 MODULAR TILE CARPET CPT3

Carpet shall comply with the following:

a. Carpet Construction: Bonded.

b. Type: Modular tile 20 x 20 inches square with 0.15 percent growth/shrink rate in accordance with ISO 2551.

c. Pile Type: Cut pile.

d. Pile Fiber: Commercial 100% branded (federally registered trademark) nylon staple.

e. Pile or Wire Height: Minimum 0.105 inch in accordance with ASTM D 418.

f. Yarn Ply: Minimum 2 in accordance with ASTM D 1423.

i. Finished Pile Yarn Weight: Minimum 17 ounces per square yard. This does not include weight of backings. Weight shall be determined in accordance with ASTM D 5848.

j. Pile Density: Minimum 7543.

k. Dye Method: 71% Solution dyed, 29% Yarn (or Skein) dyed.

2.1.1.2 MODULAR TILE CARPET CPT4

Carpet shall comply with the following:

a. Carpet Construction: Bonded.

b. Type: Modular tile 20 x 20 inches square with 0.15 percent growth/shrink rate in accordance with ISO 2551.

c. Pile Type: Cut pile.

d. Pile Fiber: Commercial 100% branded (federally registered trademark) nylon staple.

e. Pile or Wire Height: Minimum 0.105 inch in accordance with ASTM D 418.

f. Yarn Ply: Minimum 2 in accordance with ASTM D 1423.

i. Finished Pile Yarn Weight: Minimum 17 ounces per square yard. This does not include weight of backings. Weight shall be determined in accordance with ASTM D 5848.

j. Pile Density: Minimum 7543.

k. Dye Method: 73% Solution dyed, 27% Yarn (or Skein) dyed.

2.2 Performance Requirements

a. ARR (Appearance Retention Rating): Carpet shall be tested and have the minimum 3.0-3.5 (Heavy) ARR when tested in accordance with either the ASTM D 5252(Hexapod) or ASTM D 5417 (Vettermann) test methods using the number of cycles for short and long term tests as specified.

b. Static Control: Static control shall be provided to

permanently control static buildup to less than 3.5 kV when tested at 20 percent relative humidity and 70 degrees F in accordance with AATCC 134.

c. Flammability and Critical Radiant Flux Requirements: Carpet shall comply with 16 CFR 1630. Carpet in corridors and exits shall have a minimum average critical radiant flux of 0.45 watts per square centimeter when tested in accordance with ASTM E 648.

d. Tuft Bind: Tuft bind force required to pull a tuft or loop free from carpet backing shall be a minimum 20 pound average force for loop pile.

e. Colorfastness to Crocking: Dry and wet crocking shall comply with AATCC 165 and shall have a Class 4 minimum rating on the AATCC Color Transference Chart for all colors.

f. Colorfastness to Light: Colorfastness to light shall comply with AATCC 16, Test Option E "Water-Cooled Xenon-Arc Lamp, Continuous Light" and shall have a minimum 4 grey scale rating after 40 hours.

g. Delamination Strength: Delamination strength for tufted carpet with a secondary back shall be minimum of 2.5 lbs./inch.

2.3 ADHESIVES AND CONCRETE PRIMER

Adhesives and concrete primers for installation of carpet shall be waterproof, nonflammable, meet local air-quality standards, and shall be as required by the carpet manufacturer. Seam adhesive shall be waterproof, nonflammable, and nonstaining as recommended by the carpet manufacturer. Release adhesive for modular tile carpet shall be as recommended by the carpet manufacturer. Adhesives flashpoint shall be minimum 140 degrees F in accordance with ASTM D 3278. To the greatest extent possible, when a choice of adhesives and primers is to be made, the product with the lowest emissions and content of VOC's shall be procured.

2.4 MOLDING

Aluminum molding shall be a hammered surface, pinless clamp-down type, designed for the type of carpet being installed. Finish shall be natural. Floor flange shall be a minimum 1-1/2 inches wide and face shall be a minimum 5/8 inch wide .

2.5 TAPE

Tape for seams shall be as recommended by the carpet manufacturer for the type of seam used in installation.

2.6 COLOR, TEXTURE, AND PATTERN

Color, texture, and pattern shall be as indicated.

PART 3 EXECUTION

3.1 SURFACE PREPARATION

Carpet shall not be installed on surfaces that are unsuitable and will prevent a proper installation. Holes, cracks, depressions, or rough areas

shall be repaired using material recommended by the carpet or adhesive manufacturer. Floor shall be free of any foreign materials and swept broom clean. Before beginning work, subfloor shall be tested with glue and carpet to determine "open time" and bond.

3.2 MOISTURE AND ALKALINITY TESTS

Concrete slab shall be tested for moisture content and excessive alkalinity in accordance with CRI 104.

3.3 PREPARATION OF CONCRETE SUBFLOOR

Installation of the carpeting shall not commence until concrete substrate is at least 90 days old. The concrete surfaces shall be prepared in accordance with instructions of the carpet manufacturer. Type of concrete sealer, when required, shall be compatible with the carpet.

3.4 INSTALLATION

All work shall be performed by installers who are CFI certified (International Certified Floorcovering Installer Association), or manufacturer's approved installers. Installation shall be in accordance with the manufacturer's instructions and CRI 104. Edges of carpet meeting hard surface flooring shall be protected with molding; installation shall be in accordance with the molding manufacturer's instructions. Ventilation, personal protection, and other safety precautions recommended by the manufacturer of the adhesive shall be followed. Ventilation shall continue for at least 72 hours following installation.

3.4.1 Broadloom Installation

Broadloom carpet shall be installed direct glue down and shall be smooth, uniform, and secure, with a minimum of seams. Seams shall be regular, unnoticeable, and treated with a seam adhesive. Side seams shall be run toward the light where practical and where such layout does not increase the number of seams. Breadths shall be installed parallel, with carpet pile in the same direction. Patterns shall be accurately matched. Cutouts, as at door jambs, columns and ducts shall be neatly cut and fitted securely. Seams at doorways shall be located parallel to and centered directly under doors. Seams shall not be made perpendicular to doors or at pivot points. Seams at changes in directions of corridors shall follow the wall line parallel to the carpet direction. Corridors with widths less than 6 feet shall have the carpet laid lengthwise down the corridors.

3.4.2 Modular Tile Installation

Modular tiles shall be installed with release adhesive and shall be snugly jointed together. Tiles shall be laid in the same direction with accessibility to the subfloor where required.

3.5 CLEANING AND PROTECTION

3.5.1 Cleaning

After installation of the carpet, debris, scraps, and other foreign matter shall be removed. Soiled spots and adhesive shall be removed from the face of the carpet with appropriate spot remover. Protruding face yarn shall be cut off and removed. Carpet shall be vacuumed clean.

3.5.2 Protection

The installed carpet shall be protected from soiling and damage with heavy, reinforced, nonstaining kraft paper, plywood, or hardboard sheets. Edges of kraft paper protection shall be lapped and secured to provide a continuous cover. Traffic shall be restricted for at least 45 hours. Protective covering shall be removed when directed by the Contracting Officer.

3.6 REMNANTS

Remnants remaining from the installation, consisting of scrap pieces more than 2 feet in dimension with more than 6 square feet total, shall be provided. Non-retained scraps shall be removed from site and recycled appropriately.

-- End of Section --

SECTION TABLE OF CONTENTS

DIVISION 09 - FINISHES

SECTION 09900

PAINTS AND COATINGS

02/02

PART 1 GENERAL

1.1 REFERENCES
1.2 SUBMITTALS
1.3 APPLICATOR'S QUALIFICATIONS
1.3.1 Contractor Qualification
1.4 QUALITY ASSURANCE
1.4.1 Field Samples and Tests
1.4.1.1 Sampling Procedure
1.4.1.2 Testing Procedure
1.5 REGULATORY REQUIREMENTS
1.5.1 Environmental Protection
1.5.2 Lead Content
1.5.3 Chromate Content
1.5.4 Asbestos Content
1.5.5 Mercury Content
1.5.6 Silica
1.5.7 Human Carcinogens
1.5.8 Green Seal
1.6 PACKAGING, LABELING, AND STORAGE
1.7 SAFETY AND HEALTH
1.7.1 Safety Methods Used During Coating Application
1.7.2 Toxic Materials
1.8 ENVIRONMENTAL CONDITIONS
1.8.1 Coatings
1.9 COLOR SELECTION
1.10 LOCATION AND SURFACE TYPE TO BE PAINTED
1.10.1 Painting Included
1.10.1.1 Exterior Painting
1.10.1.2 Interior Painting
1.10.2 Painting Excluded
1.10.3 Mechanical and Electrical Painting
1.10.3.1 Fire Extinguishing Sprinkler Systems
1.10.4 MISCELLANEOUS PAINTING
1.10.5 Definitions and Abbreviations
1.10.5.1 Qualification Testing
1.10.5.2 Coating
1.10.5.3 DFT or dft
1.10.5.4 DSD
1.10.5.5 EPP
1.10.5.6 EXT
1.10.5.7 INT
1.10.5.8 micron / microns
1.10.5.9 mm
1.10.5.10 MPI Gloss Levels
1.10.5.11 MPI System Number

1.10.5.12 Paint

PART 2 PRODUCTS

2.1 MATERIALS

PART 3 EXECUTION

3.1 PROTECTION OF AREAS AND SPACES NOT TO BE PAINTED
3.2 SURFACE PREPARATION
3.3 PREPARATION OF METAL SURFACES
3.3.1 Existing and New Ferrous Surfaces
3.3.2 Final Ferrous Surface Condition:
3.3.3 Galvanized Surfaces
3.3.4 Non-Ferrous Metallic Surfaces
3.4 PREPARATION OF CONCRETE AND CEMENTITIOUS SURFACE
3.4.1 Concrete and Masonry
3.4.2 Gypsum Board
3.5 PREPARATION OF WOOD AND PLYWOOD SURFACES
3.5.1 New Plywood and Wood Surfaces, Except Floors:
3.5.2 Interior Wood Surfaces, Stain Finish
3.6 APPLICATION
3.6.1 Coating Application
3.6.2 Mixing and Thinning of Paints
3.6.3 Two-Component Systems
3.6.4 Coating Systems
3.7 COATING SYSTEMS FOR METAL
3.8 COATING SYSTEMS FOR CONCRETE AND CEMENTITIOUS SUBSTRATES
3.9 COATING SYSTEMS FOR WOOD AND PLYWOOD
3.10 PIPING IDENTIFICATION
3.11 INSPECTION AND ACCEPTANCE
3.12 PAINT TABLES
3.12.1 EXTERIOR PAINT TABLES
3.12.2 INTERIOR PAINT TABLES

-- End of Section Table of Contents --

SECTION 09900

PAINTS AND COATINGS
02/02

PART 1 GENERAL

1.1 REFERENCES

The publications listed below form a part of this specification to the extent referenced. The publications are referred to within the text by the basic designation only.

AMERICAN CONFERENCE OF GOVERNMENTAL INDUSTRIAL HYGIENISTS (ACGIH)

ACGIH Limit Values	(1991-1992) Threshold Limit Values (TLVs) for Chemical Substances and Physical Agents and Biological Exposure Indices (BEIs)
ACGIH TLV-DOC	Documentation of Threshold Limit Values and Biological Exposure Indices

AMERICAN SOCIETY FOR TESTING AND MATERIALS (ASTM)

ASTM D 523	(1999) Standard Test Method for Specular Gloss
ASTM D 2092	(1995) Preparation of Zinc-Coated (Galvanized) Steel Surfaces for Painting
ASTM D 4263	(1983; R 1999) Indicating Moisture in Concrete by the Plastic Sheet Method
ASTM D 4444	(1998) Standard Test Methods for Use and Calibration of Hand-Held Moisture Meters
ASTM F 1869	(1998) Measuring Moisture Vapor Emission Rate of Concrete Subfloor Using Anhydrous Calcium Chloride

CODE OF FEDERAL REGULATIONS (CFR)

29 CFR 1910.1000	Air Contaminants

FEDERAL STANDARDS (FED-STD)

FED-STD-313	(Rev. C) Material Safety Data, Transportation Data and Disposal Data for Hazardous Materials Furnished to Government Activities

MASTER PAINTERS INSTITUTE (MPI)

MPI 4	(2001) Interior/Exterior Latex Block Filler
MPI 11	(2001) Exterior Latex, Semi-Gloss

MPI 39	(2001) Interior Latex-based Wood Primer
MPI 50	(2001) Interior Latex Primer Sealer
MPI 52	(2001) Interior Latex, Gloss Level 3
MPI 57	(2001) Interior Oil Modified Clear Urethane, Satin
MPI 71	(2001) Polyurethane, Moisture Cured, Clear, Flat
MPI 79	(2001) Marine Alkyd Metal Primer
MPI 90	(2001) Interior Wood Stain, Semi-Transparent
MPI 95	(2001) Fast Drying Metal Primer
MPI 101	(2001) Cold Curing Epoxy Primer
MPI 107	(2001) Rust Inhibitive Primer (Water-Based)
MPI 108	(2001) High Build Epoxy Marine Coating
MPI 110	(2001) Interior/Exterior High Performance Acrylic
MPI 113	(2001) Elastomeric Coating
MPI 134	(2001) Waterborne Galvanized Primer
MPI 139	(2001) High Performance Latex, White and Tints - MPI Gloss Level 3
MPI 141	(2001) High Performance Semigloss Latex, White and Tints - Gloss Level 5
MPI 147	(2001) Institutional Low Odor / VOC Interior Latex, Gloss Level 5

U.S. DEPARTMENT OF DEFENSE (DOD)

MIL-STD-101	(Rev. B) Color Code for Pipelines and for Compressed Gas Cylinders

SCIENTIFIC CERTIFICATION SYSTEMS (SCS)

SCS-EPP-SP01-01	(2001) Environmentally Preferable Product Specification for Architectural and Anti-Corrosive Paints

STEEL STRUCTURES PAINTING COUNCIL (SSPC)

SSPC PA 1	(2000) Shop, Field, and Maintenance Painting
SSPC PA 3	(1995) Safety in Paint Application

SSPC VIS 1	(1989) Visual Standard for Abrasive Blast Cleaned Steel (Standard Reference Photographs)
SSPC VIS 3	(1993) Visual Standard for Power- and Hand-Tool Cleaned Steel (Standard Reference Photographs)
SSPC SP 1	(1982) Solvent Cleaning
SSPC SP 2	(1995) Hand Tool Cleaning
SSPC SP 3	(1995) Power Tool Cleaning
SSPC SP 6	(1994) Commercial Blast Cleaning
SSPC SP 7	(1994) Brush-Off Blast Cleaning
SSPC SP 10	(1994) Near-White Blast Cleaning

1.2 SUBMITTALS

The following shall be submitted in accordance with Section 01330 SUBMITTAL PROCEDURES:

The current MPI, "Approved Product List" which lists paint by brand, label, product name and product code as of the date of contract award, will be used to determine compliance with the submittal requirements of this specification. The Contractor may choose to use a subsequent MPI "Approved Product List", however, only one list may be used for the entire contract and each coating system is to be from a single manufacturer. All coats on a particular substrate must be from a single manufacturer. No variation from the MPI Approved Products List is acceptable.

Samples of specified materials may be taken and tested for compliance with specification requirements.

In keeping with the intent of Executive Order 13101, "Greening the Government through Waste Prevention, Recycling, and Federal Acquisition", products certified by SCS as meeting SCS-EPP-SP01-01 shall be given preferential consideration over registered products. Products that are registered shall be given preferential consideration over products not carrying any EPP designation.

SD-02 Shop Drawings

Piping identification

Submit color stencil codes

SD-03 Product Data

Coating

Manufacturer's Technical Data Sheets

SDD Data: Data and calculations of VOC content for inclusion in

<LED Compliance Notebook reguired under Section 01335 SUSTAINABLE DESIGN AND DEVELOPMENT.

SD-04 Samples

Color; G, RO

Submit manufacturer's samples of paint colors. Cross reference color samples to color scheme as indicated.

SD-07 Certificates

Applicator's qualifications

Qualification Testing laboratory for coatings

SD-08 Manufacturer's Instructions

Application instructions

Mixing

Detailed mixing instructions, minimum and maximum application temperature and humidity, potlife, and curing and drying times between coats.

Manufacturer's Material Safety Data Sheets

Submit manufacturer's Material Safety Data Sheets for coatings, solvents, and other potentially hazardous materials, as defined in FED-STD-313.

SD-10 Operation and Maintenance Data

Coatings

Preprinted cleaning and maintenance instructions for all coating systems shall be provided.

1.3 APPLICATOR'S QUALIFICATIONS

1.3.1 Contractor Qualification

Submit the name, address, telephone number, FAX number, and e-mail address of the contractor that will be performing all surface preparation and coating application. Submit evidence that key personnel have successfully performed surface preparation and application of coatings on similar surfaces on a minimum of three similar projects within the past three years. List information by individual and include the following:

a. Name of individual and proposed position for this work.

b. Information about each previous assignment including:

Position or responsibility

Employer (if other than the Contractor)

Name of facility owner

Mailing address, telephone number, and telex number (if non-US) of

facility owner

Name of individual in facility owner's organization who can be contacted as a reference

Location, size and description of structure

Dates work was carried out

Description of work carried out on structure

1.4 QUALITY ASSURANCE

1.4.1 Field Samples and Tests

The Contracting Officer may choose up to two coatings that have been delivered to the site to be tested at no cost to the Government. Take samples of each chosen product as specified in the paragraph "Sampling Procedures." Test each chosen product as specified in the paragraph "Testing Procedure." Products which do not conform, shall be removed from the job site and replaced with new products that confrom to the referenced specification. Testing of replacement products that failed initial testing shall be at no cost to the Government.

1.4.1.1 Sampling Procedure

The Contracting Officer will select paint at random from the products that have been delivered to the job site for sample testing. The Contractor shall provide one quart samples of the selected paint materials. The samples shall be taken in the presence of the Contracting Officer, and labeled, identifying each sample. Provide labels in accordance with the paragraph "Packaging, Labeling, and Storage" of this specification.

1.4.1.2 Testing Procedure

Provide Batch Quality Conformance Testing for specified products, as defined by and performed by MPI. As an alternative to Batch Quality Conformance Testing, the Contractor may provide Qualification Testing for specified products above to the appropriate MPI product specification, using the third-party laboratory approved under the paragraph "Qualification Testing" laboratory for coatings. The qualification testing lab report shall include the backup data and summary of the test results. The summary shall list all of the reference specification requirements and the result of each test. The summary shall clearly indicate whether the tested paint meets each test requirement. Note that Qualification Testing may take 4 to 6 weeks to perform, due to the extent of testing required.

Submit name, address, telephone number, FAX number, and e-mail address of the independent third party laboratory selected to perform testing of coating samples for compliance with specification requirements. Submit documentation that laboratory is regularly engaged in testing of paint samples for conformance with specifications, and that employees performing testing are qualified. If the Contractor chooses MPI to perform the Batch Quality Conformance testing, the above submittal information is not required, only a letter is required from the Contractor stating that MPI will perform the testing.

1.5 REGULATORY REQUIREMENTS

1.5.1 Environmental Protection

In addition to requirements specified elsewhere for environmental protection, provide coating materials that conform to the restrictions of the local Air Pollution Control District and regional jurisdiction. Notify Contracting Officer of any paint specified herein which fails to conform.

1.5.2 Lead Content

Do not use coatings having a lead content over 0.06 percent by weight of nonvolatile content.

1.5.3 Chromate Content

Do not use coatings containing zinc-chromate or strontium-chromate.

1.5.4 Asbestos Content

Materials shall not contain asbestos.

1.5.5 Mercury Content

Materials shall not contain mercury or mercury compounds.

1.5.6 Silica

Abrasive blast media shall not contain free crystilline silica.

1.5.7 Human Carcinogens

Materials shall not contain ACGIH Limit Values and ACGIH TLV-DOC confirmed human carcinogens (A1) or suspected human carcinogens (A2).

1.5.8 Green Seal

To the greatest extent possible, products shall meet the requirements of Green Seal certification and be appropriately listed and labeled.

1.6 PACKAGING, LABELING, AND STORAGE

Paints shall be in sealed containers that legibly show the contract specification number, designation name, formula or specification number, batch number, color, quantity, date of manufacture, manufacturer's formulation number, manufacturer's directions including any warnings and special precautions, and name and address of manufacturer. Pigmented paints shall be furnished in containers not larger than 5 gallons. Paints and thinners shall be stored in accordance with the manufacturer's written directions, and as a minimum, stored off the ground, under cover, with sufficient ventilation to prevent the buildup of flammable vapors, and at temperatures between 40 to 95 degrees F.

1.7 SAFETY AND HEALTH

Apply coating materials using safety methods and equipment in accordance with the following:

Work shall comply with applicable Federal, State, and local laws and regulations, and with the ACCIDENT PREVENTION PLAN, including the Activity Hazard Analysis as specified in Section 01525,"Safety Requirements" and in Appendix A of EM 385-1-1. The Activity Hazard Analysis shall include analyses of the potential impact of painting operations on painting personnel and on others involved in and adjacent to the work zone.

1.7.1 Safety Methods Used During Coating Application

Comply with the requirements of SSPC PA 3.

1.7.2 Toxic Materials

To protect personnel from overexposure to toxic materials, conform to the most stringent guidance of:

a. The applicable manufacturer's Material Safety Data Sheets (MSDS) or local regulation.

b. 29 CFR 1910.1000.

c. ACGIH Limit Values, threshold limit values.

1.8 ENVIRONMENTAL CONDITIONS

1.8.1 Coatings

Do not apply coating when air or substrate conditions are:

a. Less than 5 degrees F above dew point;

b. Below 50 degrees F or over 95 degrees F, unless specifically pre-approved by the Contracting Officer and the product manufacturer. Under no circumstances shall application conditions exceed manufacturer recommendations.

1.9 COLOR SELECTION

Colors of finish coats shall be as indicated or specified. Where not indicated or specified, colors shall be selected by the Contracting Officer. Manufacturers' names and color identification are used for the purpose of color identification only. Named products are acceptable for use only if they conform to specified requirements. Products of other manufacturers are acceptable if the colors approximate colors indicated and the product conforms to specified requirements.

Tint each coat progressively darker to enable confirmation of the number of coats.

Color, texture, and pattern of wall coating systems shall be as indicated.

1.10 LOCATION AND SURFACE TYPE TO BE PAINTED

1.10.1 Painting Included

Where a space or surface is indicated to be painted, include the following unless indicated otherwise.

a. Surfaces behind portable objects and surface mounted articles

readily detachable by removal of fasteners, such as screws and bolts.

b. New factory finished surfaces that require identification or color coding and factory finished surfaces that are damaged during performance of the work.

c. Existing coated surfaces that are damaged during performance of the work.

1.10.1.1 Exterior Painting

Includes new surfaces, existing coated surfaces, of the buildings and appurtenances as indicated. Also included are existing coated surfaces made bare by cleaning operations.

1.10.1.2 Interior Painting

Includes new surfaces of the buildings and appurtenances as indicated and existing coated surfaces made bare by cleaning operations. Where a space or surface is indicated to be painted, include the following items, unless indicated otherwise.

a. Exposed columns, girders, beams, joists, and metal deck; and

b. Other contiguous surfaces.

1.10.2 Painting Excluded

Do not paint the following unless indicated otherwise.

a. Surfaces concealed and made inaccessible by panelboards, fixed ductwork, machinery, and equipment fixed in place.

b. Surfaces in concealed spaces. Concealed spaces are defined as enclosed spaces above suspended ceilings, furred spaces, attic spaces, crawl spaces, elevator shafts and chases.

c. Steel to be embedded in concrete.

d. Copper, stainless steel, aluminum, brass, and lead except existing coated surfaces.

e. Hardware, fittings, and other factory finished items.

1.10.3 Mechanical and Electrical Painting

Includes field coating of interior and exterior new surfaces.

a. Where a space or surface is indicated to be painted, include the following items unless indicated otherwise.

(1) Exposed piping, conduit, and ductwork;

(2) Supports, hangers, air grilles, and registers;

(3) Miscellaneous metalwork and insulation coverings.

1.10.3.1 Fire Extinguishing Sprinkler Systems

Clean, pretreat, prime, and paint new fire extinguishing sprinkler systems including valves, piping, conduit, hangers, supports, miscellaneous metalwork, and accessories. Apply coatings to clean, dry surfaces, using clean brushes. Clean the surfaces to remove dust, dirt, rust, and loose mill scale. Immediately after cleaning, provide the metal surfaces with one coat primer per schedules. Shield sprinkler heads with protective covering while painting is in progress. Upon completion of painting, remove protective covering from sprinkler heads. Remove sprinkler heads which have been painted and replace with new sprinkler heads. Provide primed surfaces with the following:

a. Piping in Unfinished Areas: Provide primed surfaces with one coat of red alkyd gloss enamel applied to a minimum dry film thickness of 1.0 mil in attic spaces, spaces above suspended ceilings, crawl spaces, pipe chases, mechanical equipment room, and spaces where walls or ceiling are not painted or not constructed of a prefinished material. In lieu of red enamel finish coat, provide piping with 2 inch wide red enamel bands or self-adhering red plastic bands spaced at maximum of 20 foot intervals.

b. Piping in Finished Areas: Provide primed surfaces with two coats of paint to match adjacent surfaces, except provide valves and operating accessories with one coat of red alkyd gloss enamel applied to a minimum dry film thickness of 1.0 mil. Provide piping with 2 inch wide red enamel bands or self-adhering red plastic bands spaced at maximum of 20 foot intervals throughout the piping systems.

1.10.4 MISCELLANEOUS PAINTING
#0003

1.10.5 Definitions and Abbreviations

1.10.5.1 Qualification Testing

Qualification testing is the performance of all test requirements listed in the product specification. This testing is accomplished by MPI to qualify each product for the MPI Approved Product List, and may also be accomplished by Contractor's third party testing lab if an alternative to Batch Quality Conformance Testing by MPI is desired.

1.10.5.2 Coating

A film or thin layer applied to a base material called a substrate. A coating may be a metal, alloy, paint, or solid/liquid suspensions on various substrates (metals, plastics, wood, paper, leather, cloth, etc.). They may be applied by electrolysis, vapor deposition, vacuum, or mechanical means such as brushing, spraying, calendering, and roller coating. A coating may be applied for aesthetic or protective purposes or both. The term "coating" as used herein includes emulsions, enamels, stains, varnishes, sealers, epoxies, and other coatings, whether used as primer, intermediate, or finish coat. The terms paint and coating are used interchangeably.

1.10.5.3 DFT or dft

Dry film thickness, the film thickness of the fully cured, dry paint or

coating.

1.10.5.4 DSD

Degree of Surface Degradation, the MPI system of defining degree of surface degradation. Five (5) levels are generically defined under the Assessment sections in the MPI Maintenance Repainting Manual.

1.10.5.5 EPP

Environmentally Preferred Products, a standard for determining environmental preferability in support of Executive Order 13101.

1.10.5.6 EXT

MPI short term designation for an exterior coating system.

1.10.5.7 INT

MPI short term designation for an interior coating system.

1.10.5.8 micron / microns

The metric measurement for 0.001 mm or one/one-thousandth of a millimeter.

1.10.5.9 mm

The metric measurement for millimeter, 0.001 meter or one/one-thousandth of a meter.

1.10.5.10 MPI Gloss Levels

MPI system of defining gloss. Seven (7) gloss levels (G1 to G7) are generically defined under the Evaluation sections of the MPI Manuals. Traditionally, Flat refers to G1/G2, Eggshell refers to G3, Semigloss refers to G5, and Gloss refers to G6.

Gloss levels are defined by MPI as follows:

Gloss Level	Description	Units @ 60 degrees	Units @ 85 degrees
G1	Matte or Flat	0 to 5	10 max
G2	Velvet	0 to 10	10 to 35
G3	Eggshell	10 to 25	10 to 35
G4	Satin	20 to 35	35 min
G5	Semi-Gloss	35 to 70	
G6	Gloss	70 to 85	
G7	High Gloss		

Gloss is tested in accordance with ASTM D 523. Historically, the Government has used Flat (G1 / G2), Eggshell (G3), Semi-Gloss (G5), and Gloss (G6).

1.10.5.11 MPI System Number

The MPI coating system number in each Division found in either the MPI Architectural Painting Specification Manual or the Maintenance Repainting Manual and defined as an exterior (EXT/REX) or interior system (INT/RIN).

The Division number follows the CSI Master Format.

1.10.5.12 Paint

See Coating definition.

PART 2 PRODUCTS

2.1 MATERIALS

Conform to the coating specifications and standards referenced in PART 3. Submit manufacturer's technical data sheets for specified coatings and solvents.

PART 3 EXECUTION

3.1 PROTECTION OF AREAS AND SPACES NOT TO BE PAINTED

Prior to surface preparation and coating applications, remove, mask, or otherwise protect, hardware, hardware accessories, machined surfaces, radiator covers, plates, lighting fixtures, public and private property, and other such items not to be coated that are in contact with surfaces to be coated. Following completion of painting, workmen skilled in the trades involved shall reinstall removed items. Restore surfaces contaminated by coating materials, to original condition and repair damaged items.

3.2 SURFACE PREPARATION

Remove dirt, splinters, loose particles, grease, oil, and other foreign matter and substances deleterious to coating performance as specified for each substrate before application of paint or surface treatments. Oil and grease shall be removed prior to mechanical cleaning. Cleaning shall be programmed so that dust and other contaminants will not fall on wet, newly painted surfaces. Exposed ferrous metals such as nail heads on or in contact with surfaces to be painted with water-thinned paints, shall be spot-primmed with a suitable corrosion-inhibitive primer capable of preventing flash rusting and compatible with the coating specified for the adjacent areas.

3.3 PREPARATION OF METAL SURFACES

3.3.1 Existing and New Ferrous Surfaces

a. Ferrous Surfaces including Shop-coated Surfaces and Small Areas That Contain Rust, Mill Scale and Other Foreign Substances: Solvent clean or detergent wash in accordance with SSPC SP 1 to remove oil and grease. Where shop coat is missing or damaged, clean according to SSPC SP 2, SSPC SP 6, or SSPC SP 10. Shop-coated ferrous surfaces shall be protected from corrosion by treating and touching up corroded areas immediately upon detection.

3.3.2 Final Ferrous Surface Condition:

For tool cleaned surfaces, the requirements are stated in SSPC SP 2 and SSPC SP 3. As a visual reference, cleaned surfaces shall be similar to photographs in SSPC VIS 3.

For abrasive blast cleaned surfaces, the requirements are stated in SSPC SP

7, SSPC SP 6, and SSPC SP 10. As a visual reference, cleaned surfaces shall be similar to photographs in SSPC VIS 1.

3.3.3 Galvanized Surfaces

a. New or Existing Galvanized Surfaces With Only Dirt and Zinc Oxidation Products: Clean with solvent, steam, or non-alkaline detergent solution in accordance with SSPC SP 1. If the galvanized metal has been passivated or stabilized, the coating shall be completely removed by brush-off abrasive blast. New galvanized steel to be coated shall not be "passivated" or "stabilized" If the absence of hexavalent stain inhibitors is not documented, test as described in ASTM D 2092, Appendix X2, and remove by one of the methods described therein.

b. Galvanized with Slight Coating Deterioration or with Little or No Rusting: Water jetting to SSPC SP 12 WJ3 to remove loose coating from surfaces with less than 20 percent coating deterioration and no blistering, peeling, or cracking. Use inhibitor as recommended by the coating manufacturer to prevent rusting.

3.3.4 Non-Ferrous Metallic Surfaces

Aluminum and aluminum-alloy, lead, copper, and other nonferrous metal surfaces.

a. Surface Cleaning: Solvent clean in accordance with SSPC SP 1 and wash with mild non-alkaline detergent to remove dirt and water soluble contaminants.

3.4 PREPARATION OF CONCRETE AND CEMENTITIOUS SURFACE

3.4.1 Concrete and Masonry

a. Curing: Concrete and masonry surfaces shall be allowed to cure at least 30 days before painting, except concrete slab on grade, which shall be allowed to cure 90 days before painting.

b. Surface Cleaning: Remove the following deleterious substances.

(1) Dirt, Grease, and Oil: Wash new surfaces with a solution composed of 1/2 cup trisodium phosphate, 1/4 cuphousehold detergent, and 4 quarts of warm water. Then rinse thoroughly with fresh water. For large areas, water blasting may be used.

(2) Fungus and Mold: Wash new surfaces with a solution composed of 1/2 cup trisodium phosphate, 1/4 cup household detergent, 1 quart 5 percent sodium hypochlorite solution and 3 quarts of warm water. Rinse thoroughly with fresh water.

(3) Paint and Loose Particles: Remove by wire brushing.

(4) Efflorescence: Remove by scraping or wire brushing followed by washing with a 5 to 10 percent by weight aqueous solution of hydrochloric (muriatic) acid. Do not allow acid to remain on the surface for more than five minutes before rinsing with fresh water. Do not acid clean more than 4 square feet of surface, per workman, at one time.

c. Cosmetic Repair of Minor Defects: Repair or fill mortar joints and minor defects, including but not limited to spalls, in accordance with manufacturer's recommendations and prior to coating application.

d. Allowable Moisture Content: Latex coatings may be applied to damp surfaces, but not to surfaces with droplets of water. Do not apply epoxies to damp vertical surfaces as determined by ASTM D 4263 or horizontal surfaces that exceed 3 lbs of moisture per 1000 square feet in 24 hours as determined by ASTM F 1869. In all cases follow manufacturers recommendations. Allow surfaces to cure a minimum of 30 days before painting.

3.4.2 Gypsum Board

a. Surface Cleaning: Gypsum board shall be dry. Remove loose dirt and dust by brushing with a soft brush, rubbing with a dry cloth, or vacuum-cleaning prior to application of the first coat material. A damp cloth or sponge may be used if paint will be water-based.

b. Repair of Minor Defects: Prior to painting, repair joints, cracks, holes, surface irregularities, and other minor defects with patching plaster or spackling compound and sand smooth.

c. Allowable Moisture Content: Latex coatings may be applied to damp surfaces, but not surfaces with droplets of water. Do not apply epoxies to damp surfaces as determined by ASTM D 4263. New plaster to be coated shall have a maximum moisture content of 8 percent, when measured in accordance with ASTM D 4444, Method A, unless otherwise authorized. In addition to moisture content requirements, allow new plaster to age a minimum of 30 days before preparation for painting.

3.5 PREPARATION OF WOOD AND PLYWOOD SURFACES

3.5.1 New Plywood and Wood Surfaces, Except Floors:

a. Wood surfaces shall be cleaned of foreign matter.
Surface Cleaning: Surfaces shall be free from dust and other deleterious substances and in a condition approved by the Contracting Officer prior to receiving paint or other finish. Do not use water to clean uncoated wood.

b. Moisture content of the wood shall not exceed 12 percent as measured by a moisture meter in accordance with ASTM D 4444, Method A, unless otherwise authorized.

c. Wood surfaces adjacent to surfaces to receive water-thinned paints shall be primed and/or touched up before applying water-thinned paints.

d. Cracks and Nailheads: Set and putty stop nailheads and putty cracks after the prime coat has dried.

e. Cosmetic Repair of Minor Defects:

(1) Knots and Resinous Wood: Prior to application of coating, cover knots and stains with two or more coats of 3-pound-cut

shellac varnish, plasticized with 5 ounces of castor oil per gallon. Scrape away existing coatings from knotty areas, and sand before treating. Prime before applying any putty over shellacked area.

(2) Open Joints and Other Openings: Fill with whiting putty, linseed oil putty. Sand smooth after putty has dried.

(3) Checking: Where checking of the wood is present, sand the surface, wipe and apply a coat of pigmented orange shellac. Allow to dry before paint is applied.

3.5.2 Interior Wood Surfaces, Stain Finish

Interior wood surfaces to receive stain shall be sanded. Oak and other open-grain wood to receive stain shall be given a coat of wood filler not less than 8 hours before the application of stain; excess filler shall be removed and the surface sanded smooth.

3.6 APPLICATION

3.6.1 Coating Application

Painting practices shall comply with applicable federal, state and local laws enacted to insure compliance with Federal Clean Air Standards. Apply coating materials in accordance with SSPC PA 1. SSPC PA 1 methods are applicable to all substrates, except as modified herein.

At the time of application, paint shall show no signs of deterioration. Uniform suspension of pigments shall be maintained during application.

Unless otherwise specified or recommended by the paint manufacturer, paint may be applied by brush, roller, or spray. Rollers for applying paints and enamels shall be of a type designed for the coating to be applied and the surface to be coated.

Paints, except water-thinned types, shall be applied only to surfaces that are completely free of moisture as determined by sight or touch.

Thoroughly work coating materials into joints, crevices, and open spaces. Special attention shall be given to insure that all edges, corners, crevices, welds, and rivets receive a film thickness equal to that of adjacent painted surfaces.

Each coat of paint shall be applied so dry film shall be of uniform thickness and free from runs, drops, ridges, waves, pinholes or other voids, laps, brush marks, and variations in color, texture, and finish. Hiding shall be complete.

Touch up damaged coatings before applying subsequent coats. Interior areas shall be broom clean and dust free before and during the application of coating material.

Apply paint to new fire extinguishing sprinkler systems including valves, piping, conduit, hangers, supports, miscellaneous metal work, and accessories. Shield sprinkler heads with protective coverings while painting is in progress. Remove sprinkler heads which have been painted and replace with new sprinkler heads. For piping in unfinished spaces, provide primed surfaces with one coat of red alkyd gloss enamel to a minimum dry film thickness of 1.0 mil. Unfinished spaces include attic

spaces, spaces above suspended ceilings, crawl spaces, pipe chases, mechanical equipment room, and space where walls or ceiling are not painted or not constructed of a prefinished material. For piping in finished areas, provide prime surfaces with two coats of paint to match adjacent surfaces, except provide valves and operating accessories with one coat of red alkyd gloss enamel. Upon completion of painting, remove protective covering from sprinkler heads.

a. Drying Time: Allow time between coats, as recommended by the coating manufacturer, to permit thorough drying, but not to present topcoat adhesion problems. Provide each coat in specified condition to receive next coat.

b. Primers, and Intermediate Coats: Do not allow primers or intermediate coats to dry more than 30 days, or longer than recommended by manufacturer, before applying subsequent coats. Follow manufacturer's recommendations for surface preparation if primers or intermediate coats are allowed to dry longer than recommended by manufacturers of subsequent coatings. Each coat shall cover surface of preceding coat or surface completely, and there shall be a visually perceptible difference in shades of successive coats.

c. Finished Surfaces: Provide finished surfaces free from runs, drops, ridges, waves, laps, brush marks, and variations in colors.

d. Thermosetting Paints: Topcoats over thermosetting paints (epoxies and urethanes) should be applied within the overcoating window recommended by the manufacturer.

3.6.2 Mixing and Thinning of Paints

Reduce paints to proper consistency by adding fresh paint, except when thinning is mandatory to suit surface, temperature, weather conditions, application methods, or for the type of paint being used. Obtain written permission from the Contracting Officer to use thinners. The written permission shall include quantities and types of thinners to use.

When thinning is allowed, paints shall be thinned immediately prior to application with not more than 0.125 L of suitable thinner per liter. The use of thinner shall not relieve the Contractor from obtaining complete hiding, full film thickness, or required gloss. Thinning shall not cause the paint to exceed limits on volatile organic compounds. Paints of different manufacturers shall not be mixed.

3.6.3 Two-Component Systems

Two-component systems shall be mixed in accordance with manufacturer's instructions. Any thinning of the first coat to ensure proper penetration and sealing shall be as recommended by the manufacturer for each type of substrate.

3.6.4 Coating Systems

a. Systems by Substrates: Apply coatings that conform to the respective specifications listed in the following Tables:

Table

Division 3. Exterior Concrete Paint Table
Division 4. Exterior Concrete Masonry Units Paint Table
Division 5. Exterior Metal, Ferrous and Non-Ferrous Paint Table
Division 6. Exterior Wood; Dressed Lumber, Paneling, Decking, Shingles Paint Table

Division 3. Interior Concrete Paint Table
Division 4. Interior Concrete Masonry Units Paint Table
Division 5. Interior Metal, Ferrous and Non-Ferrous Paint Table
Division 6. Interior Wood Paint Table
Division 9: Interior Gypsum Board Paint Table

b. Minimum Dry Film Thickness (DFT): Apply paints, primers, varnishes, enamels, undercoats, and other coatings to a minimum dry film thickness of 1.5 mil each coat unless specified otherwise in the Tables. Coating thickness where specified, refers to the minimum dry film thickness.

c. Coatings for Surfaces Not Specified Otherwise: Coat surfaces which have not been specified, the same as surfaces having similar conditions of exposure.

d. Existing Surfaces Damaged During Performance of the Work, Including New Patches In Existing Surfaces: Coat surfaces with the following:

(1) One coat of primer.

(2) One coat of undercoat or intermediate coat.

(3) One topcoat to match adjacent surfaces.

3.7 COATING SYSTEMS FOR METAL

Apply coatings of Tables in Division 5 for Exterior and Interior.

a. Apply specified ferrous metal primer on the same day that surface is cleaned, to surfaces that meet all specified surface preparation requirements at time of application.

b. Inaccessible Surfaces: Prior to erection, use one coat of specified primer on metal surfaces that will be inaccessible after erection.

c. Shop-primed Surfaces: Touch up exposed substrates and damaged coatings to protect from rusting prior to applying field primer.

d. Surface Previously Coated with Epoxy or Urethane: Apply MPI 101, 1.5 mils DFT immediately prior to application of epoxy or urethane coatings.

e. Pipes and Tubing: The semitransparent film applied to some pipes and tubing at the mill is not to be considered a shop coat, but shall be overcoated with the specified ferrous-metal primer prior to application of finish coats.

f. Exposed Nails, Screws, Fasteners, and Miscellaneous Ferrous Surfaces. On surfaces to be coated with water thinned coatings,

spot prime exposed nails and other ferrous metal with latex primer MPI 107.

3.8 COATING SYSTEMS FOR CONCRETE AND CEMENTITIOUS SUBSTRATES

Apply coatings of Tables in Division 3, 4 and 9 for Exterior and Interior.

3.9 COATING SYSTEMS FOR WOOD AND PLYWOOD

a. Apply coatings of Tables in Division 6 for Exterior and Interior.

b. Prior to erection, apply two coats of specified primer to treat and prime wood surfaces which will be inaccessible after erection.

c. Apply stains in accordance with manufacturer's printed instructions.

3.10 PIPING IDENTIFICATION

Piping Identification, Including Surfaces In Concealed Spaces: Provide in accordance with MIL-STD-101. Place stenciling in clearly visible locations. On piping not covered by MIL-STD-101, stencil approved names or code letters, in letters a minimum of 1/2 inch high for piping and a minimum of 2 inches high elsewhere. Stencil arrow-shaped markings on piping to indicate direction of flow using black stencil paint.

3.11 INSPECTION AND ACCEPTANCE

In addition to meeting previously specified requirements, demonstrate mobility of moving components, including swinging and sliding doors, cabinets, and windows with operable sash, for inspection by the Contracting Officer. Perform this demonstration after appropriate curing and drying times of coatings have elapsed and prior to invoicing for final payment.

3.12 PAINT TABLES

All DFT's are minimum values.

3.12.1 EXTERIOR PAINT TABLES

DIVISION 3: EXTERIOR CONCRETE PAINT TABLE

A. New and uncoated existing

1. Latex

New; MPI EXT 3.1A-G5 (Semigloss) / Existing; MPI EXT 3.1A-G5 (Semigloss)

Primer:	Intermediate:	Topcoat:
MPI 11	MPI 11	MPI 11

System DFT: 3.5 mils

DIVISION 4: EXTERIOR CONCRETE MASONRY UNITS PAINT TABLE

A. New concrete masonry on uncoated surface:

1. Elastomeric Coating

New; MPI EXT 4.2D / Existing; MPI REX 4.2D

Primer:	Intermediate:	Topcoat:
Per Manufacturer	MPI 113	MPI 113

DIVISION 4: EXTERIOR CONCRETE MASONRY UNITS PAINT TABLE
System DFT: 16 mils

Primer as recommended by manufacturer. Topcoat: Coating to match adjacent surfaces. Surface preparation and number of coats in accordance with manufacturer's instructions.

NOTE: Apply sufficient coats of MPI 113 to achieve a minimum dry film thickness of 16 mils.

DIVISION 5: EXTERIOR METAL, FERROUS AND NON-FERROUS PAINT TABLE

STEEL / FERROUS SURFACES

B. New steel blast cleaned to SSPC SP 10:

1. Waterborne Light Industrial
MPI EXT 5.1R-G5 (Semigloss)

Primer:	Intermediate:	Topcoat:
MPI 101	MPI 108	MPI 110-G5

System DFT: 8.5 mils

EXTERIOR GALVANIZED SURFACES

B. New Galvanized surfaces:

1. Waterborne Primer / Waterborne Light Industrial Coating
MPI EXT 5.3J-G5 (Semigloss)

Primer:	Intermediate:	Topcoat:
MPI 134	MPI 110-G5	MPI 110-G5

System DFT: 4.5 mils

EXTERIOR SURFACES, OTHER METALS (NON-FERROUS)

C. Aluminum, aluminum alloy and other miscellaneous non-ferrous metal items not otherwise specified except hot metal surfaces, roof surfaces, and new prefinished equipment. Match surrounding finish:

1. Waterborne Light Industrial Coating

MPI EXT 5.4G-G5(Semigloss)

Primer:	Intermediate:	Topcoat:
MPI 95	MPI 110-G5	MPI 110-G5

System DFT: 5 mils

D. Surfaces adjacent to painted surfaces; Mechanical, Electrical, Fire extinguishing sprinkler systems including valves, conduit, hangers, supports,and miscellaneous metal items not otherwise specified except floors, hot metal surfaces, and new prefinished equipment. Match surrounding finish:

1. Waterborne Light Industrial Coating

MPI EXT 5.1C-G5(Semigloss)

Primer:	Intermediate:	Topcoat:
MPI 79	MPI 110-G5	MPI 110-G5

System DFT: 5 mils

EXTERIOR SURFACES, OTHER METALS (NON-FERROUS)

3.12.2 INTERIOR PAINT TABLES

DIVISION 3: INTERIOR CONCRETE PAINT TABLE

A. New and uncoated existing Concrete, vertical surfaces, not specified otherwise:

1. Latex

New; MPI INT 3.1A-G3 (Eggshell) / Existing; MPI RIN 3.1A-G3 (Eggshell)

Primer:	Intermediate:	Topcoat:
MPI 50	MPI 52	MPI 52

System DFT: 4 mils

DIVISION 4: INTERIOR CONCRETE MASONRY UNITS PAINT TABLE

A. New Concrete masonry:

1. Institutional Low Odor / Low VOC Latex

New; MPI INT 4.2E-G5 (Semigloss)

Filler	Primer:	Intermediate:	Topcoat:
MPI 4	N/A	MPI 147	MPI 147

System DFT: 4 mils

C. New Concrete masonry units in toilets, shower areas, and other high humidity areas unless otherwise specified:

1. Waterborne Light Industrial Coating

MPI INT 4.2K-G5(Semigloss)

Filler:	Primer:	Intermediate:	Topcoat:
MPI 4	N/A	MPI 110-G5	MPI 110-G5

System DFT: 11 mils

Fill all holes in masonry surface

DIVISION 5: INTERIOR METAL, FERROUS AND NON-FERROUS PAINT TABLE

INTERIOR STEEL / FERROUS SURFACES

A. Metal, Mechanical,Fire extinguishing sprinkler systems including valves, conduit, hangers, supports, Surfaces adjacent to painted surfaces (Match surrounding finish),and miscellaneous metal items not otherwise specified except floors, hot metal surfaces, and new prefinished equipment:

1. High Performance Architectural Latex

MPI INT 5.1R-G5 (Semigloss)

Primer:	Intermediate:	Topcoat:
MPI 79	MPI 141	MPI 141

INTERIOR STEEL / FERROUS SURFACES
System DFT: 5 mils

B. Miscellaneous non-ferrous metal items not otherwise specified except floors, hot metal surfaces, and new prefinished equipment. Match surrounding finish:

1. High Performance Architectural Latex

MPI INT 5.4F-G5 (Semigloss)

Primer:	Intermediate:	Topcoat:
MPI 95	MPI 141	MPI 141

System DFT: 5 mils

DIVISION 6: INTERIOR WOOD PAINT TABLE

A. New Wood and plywood not otherwise specified:

1. High Performance Architectural Latex
MPI INT 6.4S-G3 (Eggshell)

Primer:	Intermediate:	Topcoat:
MPI 39	MPI 139	MPI 139

System DFT: 4.5 mils

C. New Wood and Plywood, except floors; natural finish or stained:

1. Natural finish, oil-modified polyurethane
New; MPI INT 6.4J-G4 / Existing; MPI RIN 6.4L-G4

Primer:	Intermediate:	Topcoat:
MPI 57	MPI 57	MPI 57

System DFT: 4 mils

2. Stained, oil-modified polyurethane
New; MPI INT 6.4E-G4 / Existing; MPI RIN 6.4G-G4

Stain:	Primer:	Intermediate:	Topcoat:
MPI 90	MPI 57	MPI 57	MPI 57

System DFT: 4 mils

3. Stained, Moisture Cured Urethane
New; MPI INT 6.4V-G2 (Flat) / Existing; MPI RIN 6.4V-G2 (Flat)

Stain:	Primer:	Intermediate:	Topcoat:
MPI 90	MPI 71	MPI 71	MPI 71

System DFT: 4 mils

H. New Wood Doors; Natural Finish or Stained:

1. Stained, oil-modified polyurethane
New; MPI INT 6.3E-G4 / Existing; MPI RIN 6.3E-G4

Stain:	Primer:	Intermediate:	Topcoat:
MPI 90	MPI 57	MPI 57	MPI 57

System DFT: 4 mils

Note: Sand between all coats per manufacturers recommendations.

DIVISION 9: INTERIOR GYPSUM BOARD PAINT TABLE

A. New Wallboard not otherwise specified:

1. Latex

New; MPI INT 9.2A-G3 (Eggshell) / Existing; RIN 9.2A-G3 (Eggshell)

Primer:	Intermediate:	Topcoat:
MPI 50	MPI 52	MPI 52

System DFT: 4 mils

B. New Wallboard in toilets, restrooms, shower areas, locker rooms and other high humidity areas not otherwise specified.:

1. Waterborne Light Industrial Coating

New; MPI INT 9.2L-G5(Semigloss) / Existing; MPI RIN 9.2L-G5 (Semigloss)

Primer:	Intermediate:	Topcoat:
MPI 50	MPI 110-G5	MPI 110-G5

System DFT: 4 mils

-- End of Section --

SECTION TABLE OF CONTENTS

DIVISION 10 - SPECIALTIES

SECTION 10100A

VISUAL COMMUNICATIONS SPECIALTIES

07/02

PART 1 GENERAL

1.1 REFERENCES
1.2 GENERAL REQUIREMENTS
1.3 SUBMITTALS
1.4 DELIVERY, STORAGE AND HANDLING
1.5 WARRANTY

PART 2 PRODUCTS

2.1 COLOR
2.2 MATERIALS
2.2.1 Porcelain Enamel
2.2.2 Cork
2.2.2.1 Colored Cork
2.2.2.2 Natural Cork
2.2.3 Aluminum
2.3 MARKERBOARD
2.4 TACKBOARDS
2.4.1 Cork
2.5 PROJECTION SCREEN

PART 3 EXECUTION

3.1 INSTALLATION
3.2 CLEANING

-- End of Section Table of Contents --

UFGS-10100A (July 2002)

SECTION 10100A

VISUAL COMMUNICATIONS SPECIALTIES
07/02

PART 1 GENERAL

1.1 REFERENCES

The publications listed below form a part of this specification to the extent referenced. The publications are referred to in the text by basic designation only.

AMERICAN SOCIETY FOR TESTING AND MATERIALS (ASTM)

ASTM B 221	(2000) Aluminum and Aluminum-Alloy Extruded Bars, Rods, Wire, Profiles, and Tubes
ASTM F 148	(1995) Binder Durability of Cork Composition Gasket Materials
ASTM F 152	(1995; R 2002) Tension Testing of Nonmetallic Gasket Materials

1.2 GENERAL REQUIREMENTS

The term visual display board when used herein includes presentation boards, marker boards, tackboards, board cases, display track system and horizontal sliding units. Visual display boards shall be from manufacturer's standard product line.

1.3 SUBMITTALS

Government approval is required for submittals with a "G" designation; submittals not having a "G" designation are for information only. When used, a designation following the "G" designation identifies the office that will review the submittal for the Government. The following shall be submitted in accordance with Section 01330 SUBMITTAL PROCEDURES:

SD-03 Product Data

Visual Display Boards

Manufacturer's descriptive data and catalog cuts. Manufacturer's installation instructions, and cleaning and maintenance instructions.

SD-04 Samples

Aluminum

Sections of frame, map rail, and chalktray, and two map hooks.

Porcelain Enamel

Section showing porcelain enamel coating, steel, core material and backing.

Materials.

Section of core material showing the lamination of colored cork, natural cork, woven fabric, non-woven fabric, and vinyl wall covering. Sample of hardwood and plastic laminate finish, and glass type. Samples shall be minimum 4 by 4 inches and show range of color.

SD-07 Certificates

Visual Display Boards

Certificate of compliance signed by Contractor attesting that visual display boards conform to the requirements specified.

1.4 DELIVERY, STORAGE AND HANDLING

Materials shall be delivered to the building site in the manufacturer's original unopened containers and shall be stored in a clean dry area with temperature maintained above 50 degrees F. Materials shall be stacked according to manufacturer's recommendations. Visual display boards shall be allowed to acclimate to the building temperature for 24 hours prior to installation.

1.5 WARRANTY

Manufacturer's standard performance guarantees or warranties that extend beyond a one year period shall be provided.

PART 2 PRODUCTS

2.1 COLOR

Finish colors for required items shall be as specified in the drawings.

2.2 MATERIALS

2.2.1 Porcelain Enamel

Marker board writing surface shall be composed of porcelain enamel fused to a nominal 28 gauge (0.0149 inches) thick steel, laminated to a minimum 1/4 inch thick core material with a steel or foil backing sheet. Writing surface shall be capable of supporting paper by means of magnets. Marker board surface for display track system may be a powder paint dry erase surface adhered to a nominal 18 gauge (0.0478 inches) thick steel.

2.2.2 Cork

Cork shall be a continuous resilient sheet made from soft, clean, granulated cork relatively free from hardback and dust and bonded with a binder suitable for the purpose intended. The wearing surface shall be free from streaks, spots, cracks or other imperfections that would impair its usefulness or appearance. The material shall be seasoned, and a clean cut made not less than 1/2 inch from the edge shall show no evidence of

soft sticky binder.

2.2.2.1 Colored Cork

Colored cork shall be composed of pure cork and natural color pigments that are combined under heat and pressure with linseed oil. Colored cork shall be colored throughout and shall be washable. The burlap backing shall be deeply imbedded and keyed to the work sheet being partially concealed in it and meeting the requirements of ASTM F 148.

2.2.2.2 Natural Cork

Material shall be a single layer of pure grain natural cork without backing or facing. The color shall be light tan. The cork sheet shall have a tensile strength of not less than 40 psi when tested in accordance with ASTM F 152.

2.2.3 Aluminum

Aluminum frame extrusions shall be alloy 6063-T5 or 6063-T6, conform to ASTM B 221, and be a minimum 0.06 inches thick. Exposed aluminum shall have an anodized, satin finish. Straight, single lengths shall be used wherever possible. Joints shall be kept to a minimum. Corners shall be mitered and shall have a hairline closure.

2.3 MARKERBOARD

Markerboard shall have a porcelain enamel writing surface and a chalktray. Markerboard shall be a factory assembled unit complete in one piece, without joints whenever possible. When markerboard dimensions require delivery in separate sections, components shall be prefit at the factory, disassembled for delivery and jointed at the site. Frame shall be aluminum. Chalktray shall be the same material as the frame and extend the full length of the liquid markerboard. The markerboard shall have a map rail. The map rail with a tackable insert shall extend the full length of the liquid chalkboard, and shall have map hooks with clips for holding sheets of paper. Two map hooks shall be provided for each 4 foot of map rail. Dry erase markings shall be removable with a felt eraser or dry cloth without ghosting. Each unit shall come complete with an eraser and four different color compatible dry erase markers. The size shall be as shown in the drawings.

2.4 TACKBOARDS

2.4.1 Cork

Tackboard shall consist of a minimum 1/4 inch thick natural cork laminated to a minimum 1/4 inch thick hardboard, and shall have an aluminum frame. The size shall be as shown in the drawings.

2.5 PROJECTION SCREEN

Recessed mount motorized projection screen shall have 120V motor that is lubricated for life, quick reversal type, has overload protector, integral gears, and preset accessible limit switches. Recessed mount projection screens shall have an operable closure door and access panel. Screen shall be flame retardant, mildew resistant, and white matte. Bottom of screen fabric shall be weighted with metal rod. Roller shall be a rigid metal at least 5 inches in diameter mounted on sound absorbing supports. Motor will

be end mounted or motor-in-roller design. Screen shall have a 3 position control switch to stop or reverse screen at any point. The switch shall be installed in a flush electrical box with cover plate, location(s) as shown on the electrical drawings. All conduit and wiring from the control switch to the projection screen shall be furnished and installed by the Contractor. Ceiling recessed case shall be extruded aluminum or wood with metal lined motor compartment. Screen shall be UL listed. The size shall be as shown in the drawings.

PART 3 EXECUTION

3.1 INSTALLATION

Installation and assembly shall be in accordance with manufacturer's printed instructions. Concealed fasteners shall be used. Visual display boards shall be attached to the walls with suitable devices to anchor each unit. The Contractor shall furnish and install trim items, accessories and miscellaneous items in total, including but not limited to hardware, grounds, clips, backing materials, adhesives, brackets, and anchorages incidental to or necessary for a sound, secure, complete and finished installation. Installation shall not be initiated until completion of room painting and finishing operations. Visual display boards shall be installed in locations and at mounting heights indicated. Visual display boards shall be installed level and plumb, and if applicable doors shall be aligned and hardware shall be adjusted. Damaged units shall be repaired or replaced by the Contractor as directed by the Contracting Officer.

3.2 CLEANING

Writing surfaces shall be cleaned in accordance with manufacturer's instructions.

-- End of Section --

SECTION TABLE OF CONTENTS

DIVISION 10 - SPECIALTIES

SECTION 10153

TOILET PARTITIONS

11/03

PART 1 GENERAL

1.1 REFERENCES
1.2 SUBMITTALS
1.3 SYSTEM DESCRIPTION
1.4 DELIVERY, STORAGE, AND HANDLING
1.5 WARRANTY

PART 2 PRODUCTS

2.1 TOILET ENCLOSURES
2.2 URINAL SCREENS
2.3 HARDWARE
2.4 COLORS AND FINISHES
2.4.1 Colors
2.4.2 Finish No. 5

PART 3 EXECUTION

3.1 INSTALLATION
3.2 ADJUSTING AND CLEANING

-- End of Section Table of Contents --

UFGS-10153 (November 2003)

SECTION 10153

TOILET PARTITIONS
11/03

PART 1 GENERAL

1.1 REFERENCES

The publications listed below form a part of this specification to the extent referenced. The publications are referred to within the text by the basic designation only.

THE NATIONAL ARCHIVES AND RECORDS ADMINISTRATION (NARA)

36 CFR 1191	Americans with Disabilities Act (ADA) Accessibility Guidelines for Buildings and Facilities

U.S. GENERAL SERVICES ADMINISTRATION (GSA)

CID A-A-60003	(Basic) Partitions, Toilet, Complete

1.2 SUBMITTALS

Government approval is required for submittals with a "G" designation; submittals not having a "G" designation are for information only or as otherwise designated. When used, a designation following the "G" designation identifies the office that will review the submittal for the Government. The following shall be submitted in accordance with Section 01330 SUBMITTAL PROCEDURES:

SD-02 Shop Drawings

Installation

Drawings showing plans, elevations, details of construction, hardware, reinforcing, fittings, mountings, and anchorings.

SD-03 Product Data

Toilet Partition System

Manufacturer's technical data and catalog cuts including installation and cleaning instructions.

SD-04 Samples

Colors and Finishes;G, RO

Manufacturer's standard color charts and color samples.

1.3 SYSTEM DESCRIPTION

Toilet partition system, including toilet enclosures, and urinal screens,

shall be a complete and usable system of panels, hardware, and support components. The Contractor shall comply with EPA requirements in accordance with Section 01670 RECYCLED / RECOVERED MATERIALS. The partition system shall be provided by a single manufacturer, and shall be a standard product as shown in the most recent catalog data. The partition system shall be as shown.

1.4 DELIVERY, STORAGE, AND HANDLING

Components shall be delivered to the jobsite in the manufacturer's original packaging with the brand, item identification, and project reference clearly marked. Components shall be stored in a dry location that is adequately ventilated; free from dust, water, or other contaminants; and shall have easy access for inspection and handling.

1.5 WARRANTY

Manufacturer's standard performance guarantees or warranties that extend beyond a 1 year period shall be provided.

PART 2 PRODUCTS

2.1 TOILET ENCLOSURES

Toilet enclosures shall conform to CID A-A-60003, Type I, Style B, ceiling hung. Width, length, and height of toilet enclosures shall be as shown. Finish surface of panels shall be solid polymer, Finish 5. Panels indicated to receive toilet paper holders or grab bars as specified in Section 10800 TOILET ACCESSORIES, shall be reinforced for mounting of the items required. Grab bars shall withstand a bending stress, shear stress, shear force, and a tensile force induced by 250 lbf. Grab bars shall not rotate within their fittings.

2.2 URINAL SCREENS

Urinal screens shall conform to CID A-A-60003, Type III, Style B, ceiling hung. Finish surface of screens shall be solid polymer, Finish 5. Width and height of urinal screens shall be as shown. Secure wall hung urinal screens with 42 inch long, continuous flanges.

2.3 HARDWARE

Hardware for the toilet partition system shall conform to CID A-A-60003 for the specified type and style of partitions. Hardware finish shall be highly resistant to alkalies, urine, and other common toilet room acids. Latching devices and hinges for handicap compartments shall comply with 36 CFR 1191 and shall be stainless steel door latches that operate without either tight grasping or twisting of the wrist of the operator.

2.4 COLORS AND FINISHES

2.4.1 Colors

Color of finishes for toilet partition system components shall be manufacturer's standard as indicated.

2.4.2 Finish No. 5

Solid plastic fabricated of polymer resins (polyethylene) formed under high

pressure rendering a single component section not less than one inch thick. Colors shall extend throughout the panel thickness. Exposed finish surfaces shall be smooth, waterproof, non-absorbant, and resistant to staining and marking with pens, pencils, or other writing devices. Solid plastic partitions shall not show any sign of deterioration when immersed in the following chemicals and maintained at a temperature of 80 degrees F for a minimum of 30 days:

Acetic Acid (80 percent)	Hydrochloric Acid (40 percent)
Acetone	Hydrogen Peroxide (30 percent)
Ammonia (liquid)	Isopropyl Alcohol
Ammonia Phosphate	Lactic Acid (25 percent)
Bleach (12 percent)	Lime Sulfur
Borax	Nicotine
Brine	Potassium Bromide
Caustic Soda	Soaps
Chlorine Water	Sodium Bicarbonate
Citric Acid	Trisodium Phosphate
Copper Chloride	Urea; Urine
Core Oils	Vinegar

PART 3 EXECUTION

3.1 INSTALLATION

Toilet partitions shall be installed straight and plumb with uniform clearance of 1/2 inch between pilasters and panels; 1 inch between pilasters and walls; and not more than 3/16 inch between pilasters and doors, in accordance with approved manufacturer's instructions with horizontal lines level and rigidly anchored to the supporting construction. Where indicated, anchorage to walls shall be by toggle-bolting. Drilling and cutting for installation of anchors shall be at locations that will be concealed in the finished work. In the finished work, conceal evidence of drilling in floors and walls. Screws and bolts shall be stainless steel.

3.2 ADJUSTING AND CLEANING

Doors shall have a uniform vertical edge clearance of approximately 3/16 inch and shall rest open at approximately 30 degrees when unlatched. Baked enamel finish shall be touched up with the same color of paint that was used for the finish. Toilet partitions shall be cleaned in accordance with approved manufacturer's instructions and shall be protected from damage until accepted.

-- End of Section --

SECTION TABLE OF CONTENTS

DIVISION 10 - SPECIALTIES

SECTION 10201N

METAL WALL LOUVERS

09/99

PART 1 GENERAL

1.1 REFERENCES
1.2 SUBMITTALS
1.3 DELIVERY, STORAGE, AND PROTECTION

PART 2 PRODUCTS

2.1 MATERIALS
2.1.1 Extruded Aluminum
2.2 METAL WALL LOUVERS
2.2.1 Extruded Aluminum Louvers
2.2.2 Mullions and Mullion Covers
2.2.3 Screens and Frames
2.3 FASTENERS AND ACCESSORIES
2.3.1 Uninsulated, Blank-off Panels
2.4 FINISHES
2.4.1 Aluminum
2.4.1.1 Anodic Coating
2.4.1.2 Organic Coating

PART 3 EXECUTION

3.1 INSTALLATION
3.1.1 Wall Louvers
3.1.2 Screens and Frames
3.2 PROTECTION FROM CONTACT OF DISSIMILAR MATERIALS
3.2.1 Copper or Copper-Bearing Alloys
3.2.2 Aluminum
3.2.3 Metal
3.2.4 Wood

-- End of Section Table of Contents --

UFGS-10201N (September 1999)

SECTION 10201N

METAL WALL LOUVERS
09/99

PART 1 GENERAL

1.1 REFERENCES

The publications listed below form a part of this specification to the extent referenced. The publications are referred to in the text by the basic designation only.

ALUMINUM ASSOCIATION (AA)

AA DAF-45	(1980) Aluminum Finishes

AMERICAN ARCHITECTURAL MANUFACTURERS ASSOCIATION (AAMA)

AAMA 603.8	(1992; Addendum 1993) Pigmented Organic Coatings on Extruded Aluminum

AIR MOVEMENT AND CONTROL ASSOCIATION (AMCA)

AMCA 500	(1991) Louvers, Dampers and Shutters
AMCA 511	(1991) Certified Ratings Program for Air Control Devices

AMERICAN SOCIETY FOR TESTING AND MATERIALS (ASTM)

ASTM B 221	(1996) Aluminum and Aluminum-Alloy Extruded Bars, Rods, Wire, Profiles, and Tubes

1.2 SUBMITTALS

Submit the following in accordance with Section 01330, "Submittal Procedures."

SD-02 Shop Drawings

Wall louvers; G, RO

Show all information necessary for fabrication and installation of louvers. Indicate materials, sizes, thicknesses, fastenings, and profiles.

SD-04 Samples

Wall louvers;G, RO

Colors of finishes shall closely approximate colors indicated. Where color is not indicated, submit the manufacturer's standard colors to the Contracting Officer for selection.

1.3 DELIVERY, STORAGE, AND PROTECTION

Deliver materials to the site in an undamaged condition. Carefully store materials off the ground to provide proper ventilation, drainage, and protection against dampness. Louvers shall be free from nicks, scratches, and blemishes. Replace defective or damaged materials with new.

PART 2 PRODUCTS

2.1 MATERIALS

2.1.1 Extruded Aluminum

ASTM B 221, alloy 6063-T5 or -T52.

2.2 METAL WALL LOUVERS

Weather resistant type, with bird screens and made to withstand a wind load of not less than 50 pounds per square footpositive and 2.049 kilopascals negative pressure. Wall louvers shall bear the AMCA certified ratings program seal for air performance and water penetration in accordance with AMCA 500 and AMCA 511. The rating shall show a water penetration of 0.20 or less ounce per square foot of free area at a free velocity of 800 feet per minute. Gable louver shall be circular, with parallel horizontal blades.

2.2.1 Extruded Aluminum Louvers

Fabricated of extruded 6063-T5 or -T52 aluminum with a wall thickness of not less than 0.081 inch.

2.2.2 Mullions and Mullion Covers

Same material and finish as louvers. Provide mullions for all louvers more than 5 feet in width at not more than 5 feet on centers. Provide concealed mullions with covers on inside faces of joints between louvers.

2.2.3 Screens and Frames

For aluminum louvers, provide 1/2 inch square mesh, 14 or 16 gage aluminum or 1/4 inch square mesh, 16 gage aluminum bird screening. Mount screens in removable, rewirable frames of same material and finish as the louvers.

2.3 FASTENERS AND ACCESSORIES

Provide stainless steel screws and fasteners for aluminum louvers and zinc-coated or stainless steel screws and fasteners for steel louvers. Provide other accessories as required for complete and proper installation.

2.3.1 Uninsulated, Blank-off Panels

Aluminum sheet for aluminum louvers, not less than 0.050-inch nominal thickness, unless otherwise indicated.

2.4 FINISHES

2.4.1 Aluminum

Provide factory-applied anodic coating or organic coating.

2.4.1.1 Anodic Coating

Clean exposed aluminum surfaces and apply an anodized finish conforming to AA DAF-45 Designation System for Aluminum Finishes, integral color anodized, M10C22A32, Architectural Class II, color as indicated.

2.4.1.2 Organic Coating

Clean and prime exposed aluminum surfaces and apply a baked enamel finish conforming to AAMA 603.8, 0.8 mil minimum dry film thickness, color as indicated.

PART 3 EXECUTION

3.1 INSTALLATION

3.1.1 Wall Louvers

Install using stops or moldings, flanges, strap anchors, or jamb fasteners as appropriate for the wall construction and in accordance with manufacturer's recommendations.

3.1.2 Screens and Frames

Attach frames to louvers with screws or bolts.

3.2 PROTECTION FROM CONTACT OF DISSIMILAR MATERIALS

3.2.1 Copper or Copper-Bearing Alloys

Paint copper or copper-bearing alloys in contact with dissimilar metal with heavy-bodied bituminous paint or separate with inert membrane.

3.2.2 Aluminum

Where aluminum contacts metal other than zinc, paint the dissimilar metal with a primer and two coats of aluminum paint.

3.2.3 Metal

Paint metal in contact with mortar, concrete, or other masonry materials with alkali-resistant coatings such as heavy-bodied bituminous paint.

3.2.4 Wood

Paint wood or other absorptive materials that may become repeatedly wet and in contact with metal with two coats of aluminum paint or a coat of heavy-bodied bituminous paint.

-- End of Section --

SECTION TABLE OF CONTENTS

DIVISION 10 - SPECIALTIES

SECTION 10270A

RAISED FLOOR SYSTEM

10/03

PART 1 GENERAL

1.1 REFERENCES
1.2 SYSTEM DESCRIPTION
1.2.1 Floor Panels
1.2.2 Stringers
1.2.3 Pedestals
1.2.4 Pedestal Adhesive
1.2.5 Bond Strength of Factory Installed Floor Covering
1.2.6 Leakage
1.2.7 Grounding
1.3 SUBMITTALS
1.4 DELIVERY, STORAGE, AND HANDLING
1.5 EXTRA MATERIALS
1.6 OPERATION AND MAINTENANCE MANUALS

PART 2 PRODUCTS

2.1 FLOOR PANELS
2.1.1 Panel Construction
2.1.1.1 Aluminum Panels
2.1.1.2 Hollow Formed Steel Panels
2.1.1.3 Metal-Clad Cementitious Fill Panel (Composite Panels)
2.1.1.4 Concrete Panels
2.1.2 Floor Covering
2.1.2.1 High Pressure Laminate
2.1.3 Edge Strip
2.1.4 Accessories
2.1.5 Resilient Base
2.1.6 Lifting Device
2.2 PANEL SUPPORT SYSTEM
2.2.1 Pedestals
2.2.2 Stringers
2.2.3 Underfloor Bracing
2.3 TESTS
2.3.1 Load Tests
2.4 Test for Bond Strength of Factory Installed Floor Covering
2.5 COLOR

PART 3 EXECUTION

3.1 INSTALLATION
3.1.1 Preparation for Installation
3.1.2 Pedestals
3.1.3 Stringers
3.1.4 Auxiliary Framing
3.1.5 Panels
3.1.6 Resilient Base

3.1.7 Repair of Zinc Coating
3.2 TESTING OF ELECTRICAL RESISTANCE
3.3 CLEANING AND PROTECTION
3.3.1 Cleaning
3.3.2 Protection
3.4 FIRE SAFETY
3.5 SPECIAL INSPECTION AND TESTING FOR SEISMIC-RESISTING SYSTEMS

-- End of Section Table of Contents --

UFGS-10270A (October 2003)

SECTION 10270A

RAISED FLOOR SYSTEM
10/03

PART 1 GENERAL

1.1 REFERENCES

The publications listed below form a part of this specification to the extent referenced. The publications are referred to in the text by basic designation only.

CEILINGS & INTERIOR SYSTEMS CONTRACTORS ASSOCIATION (CISCA)

CISCA Access Floors	(1987) Recommended Test Procedures for Access Floors

INTERNATIONAL CONFERENCE OF BUILDING OFFICIALS (ICBO)

ICBO UBC	(1997) Uniform Building Code (3 Vol.)

NATIONAL ELECTRICAL MANUFACTURERS ASSOCIATION (NEMA)

NEMA LD 3	(1995) High-Pressure Decorative Laminates

NATIONAL FIRE PROTECTION ASSOCIATION (NFPA)

NFPA 75	(1999) Protection of Electronic Computer/Data Processing Equipment
NFPA 99	(1999) Health Care Facilities

1.2 SYSTEM DESCRIPTION

Raised flooring shall be installed at the location and elevation and in the arrangement shown on the drawings. The floor system shall be of the stringer type, complete with all supplemental items, and shall be the standard product of a manufacturer specializing in the manufacture of raised floor systems.

1.2.1 Floor Panels

Floor panel testing shall be conducted in accordance with CISCA Access Floors. When tested as specified, all deflection and deformation measurements shall be made at the point of load application on the top surface of the panel. Floor panels shall be capable of supporting 1000 pounds concentrated load without deflecting more than 0.080 inch and without permanent deformation in excess of 0.010 inch in any of the specified tests. Floor panels shall be capable of supporting 250 pounds per square foot uniform live load without deflection more than 0.040 inch. Floor panels shall be capable of supporting 600 pounds rolling load without deflecting more than 0.040 inch and without permanent deformation in excess of 0.020 inch. In accordance with CISCA Access Floors, the

permanent deformation limit under rolling load shall be satisfied in all of the specified tests. In the specified tests, the permanent deformation shall be measured after 10 passes with Wheel 1 and after 10,000 passes with Wheel 2.

1.2.2 Stringers

Stringers shall be capable of supporting a 250 poundconcentrated load at midspan without permanent deformation in excess of 0.010 inch.

1.2.3 Pedestals

Pedestals shall be capable of supporting a 5000 poundaxial load without permanent deformation.

1.2.4 Pedestal Adhesive

Adhesive shall be capable of securing a pedestal in place with sufficient bonding strength to resist an overturning force of 1000 inch pounds.

1.2.5 Bond Strength of Factory Installed Floor Covering

Bond strength of floor covering shall be sufficient to permit handling of the panels by use of the panel lifting device, and to withstand moving caster loads up to 1000 pounds, without separation of the covering from the panel.

1.2.6 Leakage

When the space below the finished floor is to be an air plenum, air leakage through the joints between panels and around the perimeter of the floor system shall not exceed 0.1 cubic foot of air per minute per linear foot of joint subjected to 0.1 inch, water gauge, positive pressure in the plenum.

1.2.7 Grounding

The raised floor system shall be grounded for safety hazard and static suppression.

1.3 SUBMITTALS

Government approval is required for submittals with a "G" designation; submittals not having a "G" designation are for information only. When used, a designation following the "G" designation identifies the office that will review the submittal for the Government. The following shall be submitted in accordance with Section 01330 SUBMITTAL PROCEDURES:

SD-02 Shop Drawings

Raised Floor System

Drawings showing layout of the work, sizes and details of components, details at floor perimeter, bracing to resist seismic or other lateral loads, typical cutout details including size and shape limitation, method of grounding, description of shop coating, and installation height above structural floor.

SD-03 Product Data

Raised Floor System

Manufacturer's descriptive data, catalog cuts, and installation instructions. The data shall include information about any design and production techniques, procedures and policies used to conserve energy, reduce material, improve waste management or incorporate green building/recycled products into the manufacturer of their components or products. Cleaning and maintenance instructions shall be included. Design calculations which demonstrate that the proposed floor system meets requirements for seismic loading, prepared in accordance with subparagraph Underfloor Bracing under paragraph PANEL SUPPORT SYSTEM and ICBO UBC. Certified copies of test reports may be submitted in lieu of calculations.

SD-04 Samples

Raised Floor System

One sample of each panel type and suspension system proposed for use.

SD-06 Test Reports

Tests
Testing of Electrical Resistance

Certified copies of test reports from an approved testing laboratory, attesting that the proposed floor system components meet the performance requirements specified.

SD-07 Certificates

Raised Floor System

Certificate of compliance attesting that the raised floor system meets specification requirements.

1.4 DELIVERY, STORAGE, AND HANDLING

Materials shall be stored in original protective packaging in a safe, dry, and clean location and shall be handled in a manner to prevent damage. Panels shall be stored at temperatures between 40 and 90 degrees F, and between 20 percent and 70 percent humidity.

1.5 EXTRA MATERIALS

Spare floor panels, spare complete pedestal assemblies, and spare stringers shall be furnished at the rate of one space for each 100 or fraction thereof required.

1.6 OPERATION AND MAINTENANCE MANUALS

Provide maintenance instructions for proper care of the floor panel surface. When conductive flooring is specified, require submittal of maintenance instructions to identify special cleaning and maintenance requirements to maintain "conductivity" properties of the panel finish.

PART 2 PRODUCTS

2.1 FLOOR PANELS

2.1.1 Panel Construction

Except for edge panels, panel size shall be 24 by 24 inches. Finished panels shall be within a 0.010 inch tolerance of the nominal size, and shall be square within a tolerance of 0.015 inch measured corner-to-corner. The top surface of panels shall be flat within a 0.020 inchtolerance measured corner-to-corner. Panels shall be permanently marked to indicate load rating and model number.

2.1.1.1 Aluminum Panels

Aluminum panels shall be of die-cast or extruded construction.

2.1.1.2 Hollow Formed Steel Panels

Steel panels shall be of die-formed construction, consisting of a flat steel top sheet welded to one or more formed steel stiffener sheets. Panels shall be chemically cleaned, bonderized, and painted with the manufacturer's standard finish.

2.1.1.3 Metal-Clad Cementitious Fill Panel (Composite Panels)

Composite panels shall be of die-formed steel construction totally enclosing the panel, including the top surface. The void spaces between the top sheet and the formed steel bottom sheet shall be completely filled with an incombustible cementitious or concrete material.

2.1.1.4 Concrete Panels

Concrete panels shall be of lightweight structural concrete with either structural reinforcing or a die-formed, electro-galvanized steel bottom pan. All concrete surfaces including those resulting from field cuts shall be sealed with the manufacturer's standard sealer before covering the surfaces with other materials.

2.1.2 Floor Covering

Floor panels shall be surfaced with materials firmly bonded in place with waterproof adhesive. The electrical resistance shall remain stable over the life expectancy of the floor covering. Any antistatic agent used in the manufacturing process shall be an integral part of the material, and shall not be surface applied. Bolt heads or similar attachments shall not rise above the traffic surface.

2.1.2.1 High Pressure Laminate

High pressure laminate surfacing shall conform to NEMA LD 3, Grade HW 62. Total system electrical resistivity from the wearing surface of the floor to the ground connection shall be between 150,000 ohms and 20,000,000,000 ohms.

2.1.3 Edge Strip

Panels shall be edged with extruded vinyl edge strips secured in place with mechanical interlock or adhesive bond, or shall be of a replaceable type.

Top of strip shall be approximately 1/8 inch wide, and shall be flush with the floor surfacing.

2.1.4 Accessories

Registers, grilles, perforated panels, and plenum dividers shall be provided where indicated, and shall be the manufacturer's standard type. Registers, grilles, and perforated panels shall be designed to support the same static loads as floor panels without structural failure, and shall be capable of delivering the air volumes indicated. Registers and perforated panels shall be 25 percent open area and shall be equipped with adjustable dampers.

2.1.5 Resilient Base

Base shall be rubber or vinyl coved style (installed with resilient flooring). Base shall be 4 inches high and a minimum 1/8 inch thick. Performed outside corners shall be furnished.

2.1.6 Lifting Device

Each individual room shall be provided with one floor panel lifting device standard with the floor manufacturer. A minimum of two devices shall be furnished.

2.2 PANEL SUPPORT SYSTEM

2.2.1 Pedestals

Pedestals shall be of steel or aluminum or a combination thereof. Ferrous materials shall have a factory-applied corrosion-resistant finish. Pedestal base plates shall provide a minimum of 16 square inches of bearing surface and shall be a minimum of 1/8 inch thick. Pedestal shafts shall be threaded to permit height adjustment within a range of approximately 2 inches, to permit overall floor adjustment within plus or minus 0.10 inch of the required elevation, and to permit leveling of the finished floor surface within 0.062 inch in 10 feet in all directions. Locking devices shall be provided to positively lock the final pedestal vertical adjustments in place. Pedestal caps shall interlock with stringers to preclude tilting or rocking of the panels.

2.2.2 Stringers

Stringers shall be of rolled steel or extruded aluminum, and shall interlock with the pedestal heads to prevent lateral movement.

2.2.3 Underfloor Bracing

Special bracing to resist the effects of seismic or other forces shall be in accordance with Section 13080 SEISMIC PROTECTION FOR MISCELLANEOUS EQUIPMENT as shown on the approved detail drawings.

2.3 TESTS

Raised flooring shall be factory tested by an independent laboratory at the same position and maximum design elevation and in the same arrangement as shown on the drawings for installation so as to duplicate service conditions as much as possible.

2.3.1 Load Tests

Floor panel, stringer, and pedestal testing shall be conducted in accordance with CISCA Access Floors.

2.4 Test for Bond Strength of Factory Installed Floor Covering

The test panel shall be supported on pedestals and stringers as specified for the installed floor. The supports shall be braced as necessary to prevent sideways movement during the test. A test load of 1000 pounds shall be imposed on the test assembly through a hard plastic caster 3 inches in diameter and 1 inch wide. The caster shall be rolled completely across the center of the panel. The panel shall withstand 20 passes of the caster with no delamination or separation of the covering.

2.5 COLOR

Color shall be as indicated on the drawings. Color listed is not intended to limit the selection of equal colors from other manufacturers.

PART 3 EXECUTION

3.1 INSTALLATION

The floor system shall be installed in accordance with the manufacturer's instructions and with the approved detail drawings. Open ends of the floor, where the floor system does not abut wall or other construction, shall have positive anchorage and rigid support. Areas to receive raised flooring shall be maintained between 60 and 90 degrees F, and between 20 percent and 70 percent humidity for 24 hours prior to and during installation.

3.1.1 Preparation for Installation

The area in which the floor system is to be installed shall be cleared of all debris. Structural floor surfaces shall be thoroughly cleaned and all dust shall be removed. Floor coatings required for dust or vapor control shall be installed prior to installation of pedestals only if the pedestal adhesive will not damage the coating. If the coating and adhesive are not compatible, the coating shall be applied after the pedestals have been installed and the adhesive has cured.

3.1.2 Pedestals

Pedestals shall be accurately spaced, and shall be set plumb and in true alignment. Base plates shall be in full and firm contact with the structural floor, and shall be secured to the structural floor with adhesive.

3.1.3 Stringers

Stringers shall be interlocked with the pedestal caps to preclude lateral movement, and shall be spaced uniformly in parallel lines at the indicated elevation.

3.1.4 Auxiliary Framing

Auxiliary framing or pedestals shall be provided around columns and other permanent construction, at sides of ramps, at open ends of the floor, and

beneath panels that are substantially cut to accommodate utility systems. Special framing for additional lateral support shall be as shown on the approved detail drawings.

3.1.5 Panels

The panels shall be interlocked with supports in a manner that will preclude lateral movement. Perimeter panels, cutout panels, and panels adjoining columns, stairs, and ramps must be fastened to the supporting components to form a rigid boundary for the interior panels. Floors shall be level within 1/16 inch measured with a 10 foot straightedge in all directions. Cut edges of steel and wood-core panels shall be painted as recommended by the panel manufacturer. Cut edges of composite panels shall be coated with a silicone rubber sealant or with an adhesive recommended by the panel manufacturer. Extruded vinyl edging shall be secured in place at all cut edges of all panel cut-outs to prevent abrasion of cables. Where the space below the floor is a plenum, cutouts for conduit and similar penetrations shall be closed using self-extinguishing sponge rubber.

3.1.6 Resilient Base

Base shall be provided at vertical wall intersections. Cracks and voids in walls and other vertical surfaces to receive base shall be filled with an approved filler. The base shall be applied after the floor system has been completely installed. Base shall be applied with adhesive in accordance with the manufacturer's recommendations.

3.1.7 Repair of Zinc Coating

Zinc coating that has been damaged, and cut edges of zinc-coated components and accessories, shall be repaired by the application of a galvanizing repair paint. Areas to be repaired shall be thoroughly cleaned prior to application of the paint.

3.2 TESTING OF ELECTRICAL RESISTANCE

Testing of electrical resistance in the completed installation shall be conducted in the presence of the Contracting Officer. Testing shall be in accordance with NFPA 99 modified by placing one electrode on the center of the panel surface and connecting the other electrode to the metal flooring support. Measurements shall be made at five or more locations. Each measurement shall be the average of five readings of 15 seconds duration at each location. During the tests, relative humidity shall be 45 to 55 percent and temperature shall be 69 to 75 degrees F. The panels used in the testing will be selected at random and will include two panels most distant from the ground connection. Electrical resistance shall be measured with instruments that are accurate within 2 percent and that have been calibrated within 60 days prior to the performance of the resistance tests. The metal-to-metal resistance from panel to supporting pedestal shall not exceed 10 ohms. The resistance between the wearing surface of the floor covering and the ground connection, as measured on the completed installation, shall be in accordance with paragraph FLOOR COVERING.

3.3 CLEANING AND PROTECTION

3.3.1 Cleaning

The space below the completed floor shall be free of all debris. Before any traffic or other work on the completed raised floor is started, the

completed floor shall be cleaned in accordance with the floor covering manufacturer's instructions.

3.3.2 Protection

Traffic areas of raised floor systems shall be protected with a covering of building paper, fiberboard, or other suitable material to prevent damage to the surface. Cutouts shall be covered with material of sufficient strength to support the loads to be encountered. Plywood or similar material shall be placed on the floor to serve as runways for installation of heavy equipment. Protection shall be maintained until the raised floor system is accepted.

3.4 FIRE SAFETY

An automatic detection system shall be installed below the raised floor meeting the requirements of NFPA 75 paragraph 5-2.1 and shall sound an audible and visual alarm. Air space below the raised floor shall be subdivided into areas not exceeding 10,000 square feet by tight, noncombustible bulkheads. All penetrations for piping and cables shall be sealed to maintain bulkhead properties.

3.5 SPECIAL INSPECTION AND TESTING FOR SEISMIC-RESISTING SYSTEMS

Special inspections and testing for seismic-resisting systems and components shall be done in accordance with Section 01452A SPECIAL INSPECTION FOR SEISMIC-RESISTING SYSTEMS.

-- End of Section --

SECTION TABLE OF CONTENTS

DIVISION 10 - SPECIALTIES

SECTION 10440

INTERIOR SIGNAGE

07/02

PART 1 GENERAL

1.1 REFERENCES
1.2 SUBMITTALS
1.3 GENERAL
1.3.1 Character Proportions and Heights
1.3.2 Raised and Brailled Characters and Pictorial Symbol Signs (Pictograms)
1.4 QUALIFICATIONS
1.5 DELIVERY AND STORAGE

PART 2 PRODUCTS

2.1 ROOM IDENTIFICATION/DIRECTIONAL SIGNAGE SYSTEM
2.1.1 Standard Room Signs
2.1.2 Changeable Message Strip Signs
2.1.3 Type of Mounting For Signs
2.1.4 Graphics
2.2 ALUMINUM ALLOY PRODUCTS
2.3 FABRICATION AND MANUFACTURE
2.3.1 Factory Workmanship
2.3.2 Dissimilar Materials
2.4 COLOR, FINISH, AND CONTRAST

PART 3 EXECUTION

3.1 INSTALLATION
3.1.1 Anchorage
3.1.2 Protection and Cleaning

-- End of Section Table of Contents --

UFGS-10440 (July 2002)

SECTION 10440

INTERIOR SIGNAGE
07/02

PART 1 GENERAL

1.1 REFERENCES

The publications listed below form a part of this specification to the extent referenced. The publications are referred to in the text by basic designation only.

ALUMINUM ASSOCIATION (AA)

AA PK-1	(1999) Registration Record of Aluminum Association Alloy Designations and Chemical Composition Limits for Aluminum Alloys in the Form of Castings and Ingot

AMERICAN NATIONAL STANDARDS INSTITUTE (ANSI)

ANSI Z97.1	(1984; R 1994) Safety Performance Specifications and Methods of Test for Safety Glazing Materials Used in Buildings

AMERICAN SOCIETY FOR TESTING AND MATERIALS (ASTM)

ASTM B 209	(1996) Aluminum and Aluminum-Alloy Sheet and Plate
ASTM B 221	(2000) Aluminum and Aluminum-Alloy Extruded Bars, Rods, Wire, Profiles, and Tubes

AMERICAN WELDING SOCIETY (AWS)

AWS D1.2	(1997) Structural Welding Code - Aluminum

1.2 SUBMITTALS

Government approval is required for submittals with a "G" designation; submittals not having a "G" designation are for information only or as otherwise designated. When used, a designation following the "G" designation identifies the office that will review the submittal for the Government. The following shall be submitted in accordance with Section 01330 SUBMITTAL PROCEDURES:

SD-02 Shop Drawings

Detail Drawings;G, RO

Drawings showing elevations of each type of sign, dimensions,

details and methods of mounting or anchoring, shape and thickness of materials, and details of construction. A schedule showing the location, each sign type, and message shall be included.

SD-03 Product Data

Installation

Manufacturer's descriptive data, catalogs cuts, installation and cleaning instructions.

SD-04 Samples

Interior Signage;G, RO

One sample of each of the following sign types showing typical quality and workmanship. The samples may be installed in the work, provided each sample is identified and location recorded.

a. Directional sign.

b. Door identification sign.

Two samples of manufacturer's standard color chips for each material requiring color selection.

SD-10 Operation and Maintenance Data

Approved Manufacturer's Instructions
Protection and Cleaning

Six copies of operating instructions outlining the step-by-step procedures required for system operation shall be provided. The instructions shall include simplified diagrams for the system as installed. Six copies of maintenance instructions listing routine procedures, repairs, and guides shall be provided. The instructions shall include the manufacturer's name, model number, service manual, parts list, and brief description of all equipment and their basic operating features. Each set shall be permanently bound and shall have a hard cover. The following identification shall be inscribed on the covers: the words "OPERATING AND MAINTENANCE INSTRUCTIONS", name and location of the facility, name of the Contractor, and contract number.

1.3 GENERAL

Interior signage shall be of the design, detail, sizes, types, and message content shown on the drawings, shall conform to the requirements specified, and shall be provided at the locations indicated. Signs shall be complete with lettering, framing as detailed, and related components for a complete installation. Recyclable materials shall conform to EPA requirements in accordance with Section 01670 RECYCLED / RECOVERED MATERIALS.

1.3.1 Character Proportions and Heights

Letters and numbers on indicated signs in handicapped-accessible buildings, which do not designate permanent rooms or spaces, shall have a width-to-height ratio between 3:5 and 1:1 and a stroke-width-to-height ratio between 1:5 and 1:10. Characters and numbers on indicated signs

shall be sized according to the viewing distance from which they are to be read. The minimum height is measured using an upper case letter "X". Lower case characters are permitted. Suspended or projected overhead signs shall have a minimum character height of 3 inches.

1.3.2 Raised and Brailled Characters and Pictorial Symbol Signs (Pictograms)

Letters and numbers on indicated signs which designate permanent rooms and spaces in handicapped-accessible buildings shall be raised 1/32 inch upper case, sans serif or simple serif type and shall be accompanied with Grade 2 Braille. Raised characters shall be at least 5/8 inch in height, but no higher than 2 inches. Pictograms shall be accompanied by the equivalent verbal description placed directly below the pictogram. The border dimension of the pictogram shall be 6 inches minimum in height. Indicated accessible facilities shall use the international symbol of accessibility.

1.4 QUALIFICATIONS

Signs, plaques, and dimensional letters shall be the standard product of a manufacturer regularly engaged in the manufacture of such products and shall essentially duplicate signs that have been in satisfactory use at least 2 years prior to bid opening.

1.5 DELIVERY AND STORAGE

Materials shall be delivered to the jobsite in manufacturer's original packaging and stored in a clean, dry area in accordance with manufacturer's instructions.

PART 2 PRODUCTS

2.1 ROOM IDENTIFICATION/DIRECTIONAL SIGNAGE SYSTEM

Signs shall be fabricated of Type ES/MP laminated thermosetting plastic suitable for engraving or acrylic plastic conforming to ANSI Z97.1 .

2.1.1 Standard Room Signs

Signs shall consist of matte finish acrylic plastic. Units shall be frameless. Corners of signs shall be squared.

2.1.2 Changeable Message Strip Signs

Changeable message strip signs shall consist of cast acrylic face with message slots and associated end caps, as detailed, for insertion of changeable message strips. Size of signs shall be as shown on the drawings. Individual message strips to permit removal, change, and reinsertion shall be provided as detailed. Corners of signs shall be squared.

2.1.3 Type of Mounting For Signs

Extruded aluminum brackets, mounted as shown, shall be furnished for hanging, projecting, and double-sided signs. Mounting for framed, hanging, and projecting signs shall be by mechanical fasteners. Surface mounted signs shall be provided with countersunk mounting holes in plaques and mounting screws. Sign inserts shall be provided with 1/16 inch thick foam tape.

2.1.4 Graphics

Signage graphics for modular identification/directional signs shall conform to the following:

Acrylic letters 1/8 inch thick and chemically welded to 0.125 inch thick acrylic backup sheet.

2.2 ALUMINUM ALLOY PRODUCTS

Aluminum extrusions shall be at least 1/8 inch thick, and aluminum plate or sheet shall be at least 0.0508 inch thick. Extrusions shall conform to ASTM B 221; plate and sheet shall conform to ASTM B 209. Where anodic coatings are specified, alloy shall conform to AA PK-1 alloy designation 514.0. Exposed anodized aluminum finishes shall be as shown. Welding for aluminum products shall conform to AWS D1.2.

2.3 FABRICATION AND MANUFACTURE

2.3.1 Factory Workmanship

Holes for bolts and screws shall be drilled or punched. Drilling and punching shall produce clean, true lines and surfaces. Exposed surfaces of work shall have a smooth finish and exposed riveting shall be flush. Fastenings shall be concealed where practicable.

2.3.2 Dissimilar Materials

Where dissimilar metals are in contact, the surfaces will be protected to prevent galvanic or corrosive action.

2.4 COLOR, FINISH, AND CONTRAST

Color shall be as indicated on the drawings. In buildings required to be handicapped-accessible, the characters and background of signs shall be eggshell, matte, or other non-glare finish. Characters and symbols shall contrast with their background - either light characters on a dark background or dark characters on a light background.

PART 3 EXECUTION

3.1 INSTALLATION

Signs shall be installed in accordance with approved manufacturer's instructions at locations shown on the detail drawings. Illuminated signage shall be in conformance with the requirements of Section 16415A ELECTRICAL WORK, INTERIOR. Signs shall be installed plumb and true at mounting heights indicated, and by method shown or specified. Required blocking shall be installed as detailed. Signs which designate permanent rooms and spaces in handicapped-accessible buildings shall be installed on the wall adjacent to the latch side of the door. Where there is no wall space to the latch side of the door, including at double leaf doors, signs shall be placed on the nearest adjacent wall. Mounting location for such signage shall be so that a person may approach within 3 inches of signage without encountering protruding objects or standing within the swing of a door. Signs on doors or other surfaces shall not be installed until finishes on such surfaces have been installed. Signs installed on glass surfaces shall be installed with matching blank back-up plates in accordance with manufacturer's instructions.

3.1.1 Anchorage

Anchorage shall be in accordance with approved manufacturer's instructions. Anchorage not otherwise specified or shown shall include slotted inserts, expansion shields, and powder-driven fasteners when approved for concrete; toggle bolts and through bolts for masonry; machine carriage bolts for steel; lag bolts and screws for wood. Exposed anchor and fastener materials shall be compatible with metal to which applied and shall have matching color and finish. Where recommended by signage manufacturer, foam tape pads may be used for anchorage. Foam tape pads shall be minimum 1/16 inch thick closed cell vinyl foam with adhesive backing. Adhesive shall be transparent, long aging, high tech formulation on two sides of the vinyl foam. Adhesive surfaces shall be protected with a 5 mil green flatstock treated with silicone. Foam pads shall be sized for the signage as per signage manufacturer's recommendations. Signs mounted to painted gypsum board surfaces shall be removable for painting maintenance. Signs mounted to lay-in ceiling grids shall be mounted with clip connections to ceiling tees.

3.1.2 Protection and Cleaning

The work shall be protected against damage during construction. Hardware and electrical equipment shall be adjusted for proper operation. Glass, frames, and other sign surfaces shall be cleaned in accordance with the manufacturer's approved instructions.

-- End of Section --

SECTION TABLE OF CONTENTS

DIVISION 10 - SPECIALTIES

SECTION 10505N

STEEL CLOTHING AND GEAR LOCKERS

09/99

PART 1 GENERAL

1.1 REFERENCES
1.2 SUBMITTALS
1.3 DELIVERY, HANDLING, AND STORAGE
1.4 FIELD MEASUREMENTS
1.5 QUALITY ASSURANCE
1.5.1 Color Chips

PART 2 PRODUCTS

2.1 TYPES
2.1.1 Wood Lockers
2.1.2 Protective Gear Lockers
2.2 MATERIAL
2.2.1 Galvanized Steel Sheet
2.2.2 Chromium Coating
2.2.3 Finish
2.2.3.1 Steel Shapes, Plates, and Bars
2.2.3.2 Cold-Formed Steel
2.2.3.3 Wire Mesh
2.2.3.4 Color
2.3 COMPONENTS FOR CLOTHING LOCKERS
2.3.1 Built-In Locks
2.3.2 Coat Hooks
2.3.3 Hanger Rods
2.3.4 Door Handles
2.3.5 Doors
2.3.5.1 Hinges
2.3.5.2 Latching Mechanisms
2.3.6 Latch Strikes
2.3.7 Silencers
2.3.8 Back and Side Panels, Tops, and Bottoms
2.3.9 Shelves
2.3.10 Number Plates
2.3.11 Fastening Devices
2.4 COMPONENTS FOR GEAR LOCKERS
2.4.1 Frames
2.4.2 Panels
2.4.3 Doors
2.4.4 Hinges
2.4.5 Latch and Lock Arrangement
2.4.6 Accessories and Equipment
2.4.7 Brackets for Wall Mounting
2.4.8 Finish
2.4.9 Name Plates
2.5 LOCKER BENCHES
2.5.1 Bench Tops

2.5.2 Pedestals

PART 3 EXECUTION

3.1 ASSEMBLY AND INSTALLATION
3.2 NUMBERING SYSTEM
3.3 FIELD QUALITY CONTROL
3.3.1 Testing
3.3.2 Repairing
3.3.3 Cleaning

-- End of Section Table of Contents --

UFGS-10505N (September 1999)

SECTION 10505N

STEEL CLOTHING AND GEAR LOCKERS
09/99

PART 1 GENERAL

1.1 REFERENCES

The publications listed below form a part of this specification to the extent referenced. The publications are referred to within the text by the basic designation only.

AMERICAN IRON AND STEEL INSTITUTE (AISI)

AISI SG-973	(1986) Cold-Formed Steel Design Manual

ASTM INTERNATIONAL (ASTM)

ASTM A 36/A 36M	(2003a) Carbon Structural Steel
ASTM A 653/A 653M	(1998) Steel Sheet, Zinc-Coated (Galvanized) or Zinc-Iron Alloy-Coated (Galvannealed) by the Hot-Dip Process
ASTM B 456	(1995) Electrodeposited Coatings of Copper Plus Nickel Plus Chromium and Nickel Plus Chromium
ASTM D 2092	(1995) Preparation of Zinc-Coated (Galvanized) Steel Surfaces for Painting

U.S. GENERAL SERVICES ADMINISTRATION (GSA)

FS AA-L-00486	(Rev. J) Lockers, Clothing, Steel

1.2 SUBMITTALS

Submit the following in accordance with Section 01330, "Submittal Procedures."

SD-02 Shop Drawings

Types

Location

Installation

Numbering system

SD-03 Product Data

Material

Finish

Components for clothing lockers

Components for gear lockers

Assembly instructions

SD-04 Samples

Color chips; G, RO

1.3 DELIVERY, HANDLING, AND STORAGE

Deliver lockers and associated materials in their original packages, containers, or bundles bearing the manufacturer's name and the name of the material. Protect from weather, soil, and damage during delivery, storage, and construction.

1.4 FIELD MEASUREMENTS

To ensure proper fits, make field measurements prior to the preparation of drawings and fabrication.

1.5 QUALITY ASSURANCE

1.5.1 Color Chips

Provide a minimum of three color chips for each type of locker, not less than 3 inches square, of each color indicated.

PART 2 PRODUCTS

2.1 TYPES

FS AA-L-00486. Provide Type II, double-tier, Style 1 lockers in the location, quantities and sizes indicated. Provide locker finish colors as indicated.

2.1.1 Wood Lockers

Wood lockers with plastic laminate cladding are specified as laminate-clad casework in Section 06410A LAMINATE CLADDING ARCHITECTURAL CASEWORK.

2.1.2 Protective Gear Lockers

Lockers shall be standard product of a manufacturer regularly engaged in the manufacture of open-grid (wire mesh) lockers for firefighters' protective clothing.

2.2 MATERIAL

2.2.1 Galvanized Steel Sheet

ASTM A 653/A 653M, commercial quality, minimized spangle, galvanized steel sheet with not less than G60 zinc coating. Prepare surface of sheet for

painting in accordance with ASTM D 2092, Method A. Minimum uncoated sheet thickness as specified.

2.2.2 Chromium Coating

Nickel and chromium electrodeposited on the specified base metal. Conform to ASTM B 456, SC-3, as applicable to the base metal.

2.2.3 Finish

FS AA-L-00486.

2.2.3.1 Steel Shapes, Plates, and Bars

ASTM A 36/A 36M.

2.2.3.2 Cold-Formed Steel

AISI SG-973.

2.2.3.3 Wire Mesh

Carbon steel wire, 1/4 inch diameter, woven diamond mesh, intermediate crimped or square welded wire.

2.2.3.4 Color

As selected.

2.3 COMPONENTS FOR CLOTHING LOCKERS

2.3.1 Built-In Locks

FS AA-L-00486. Provide a padlock eye in the door latching mechanism.

2.3.2 Coat Hooks

FS AA-L-00486, chromium plated.

2.3.3 Hanger Rods

FS AA-L-00486.

2.3.4 Door Handles

FS AA-L-00486. Provide zinc alloy or steel handles with a chromium coating.

2.3.5 Doors

FS AA-L-00486, not less than 0.0598 inch thick steel sheet.

2.3.5.1 Hinges

In addition to the requirements of FS AA-L-00486, provide 5-knuckle hinges, minimum 2 inches high. Fabricate knuckle hinges from not less than 0.0747 inch thick steel sheet. A full height piano hinge may be provided if standard with the manufacturer. Weld or bolt hinges to the door frame. Weld, bolt, or rivet hinges to the door.

2.3.5.2 Latching Mechanisms

FS AA-L-00486.

2.3.6 Latch Strikes

FS AA-L-00486. Fabricate from not less than 0.0747 inch thick steel sheet, except latch strike may be continuous from top to bottom and fabricated as part of the door framing.

2.3.7 Silencers

FS AA-L-00486.

2.3.8 Back and Side Panels, Tops, and Bottoms

FS AA-L-00486, not less than 0.0474 inch thick steel sheet.

2.3.9 Shelves

FS AA-L-00486. Fabricate from not less than 0.0598 inch thick steel sheet.

2.3.10 Number Plates

FS AA-L-00486. Aluminum. Provide consecutive numbers beginning with 1 inch in each room with lockers.

2.3.11 Fastening Devices

Provide bolts, nuts, and rivets as specified in FS AA-L-00486.

2.4 COMPONENTS FOR GEAR LOCKERS

2.4.1 Frames

Frames shall be 1/4 inch high strength tubing.

2.4.2 Panels

Panels for all areas shall be 1/4 inch welded wire mesh, welded to frames.

2.4.3 Doors

Doors shall have tubing frame and wire mesh panel matching sides, back and top.

2.4.4 Hinges

Hinges shall be self-closing 5-knuckle, minimum 2 inches high.

2.4.5 Latch and Lock Arrangement

Same as for clothing lockers.

2.4.6 Accessories and Equipment

Provide wire mesh top shelf with stainless steel form to hold helmet, hanging rod, secure box, drying hangers, all as standard with manufacturer.

2.4.7 Brackets for Wall Mounting

11 gage galvanized steel sheet.

2.4.8 Finish

"Powder coated" baked enamel. Color as indicated.

2.4.9 Name Plates

20 ga sheet steel, to receive tag by others.

*2

2.5 LOCKER BENCHES

2.5.1 Bench Tops

Manufacturer's standard one-piece units or closely spaced planks, of recycled plastic or fiberglass reinforced plastic (FRP), minimum 1-3/8 inch thick, with rounded corners and edges. Material shall be integrally colored, smooth surfaced and maintenance free. Solid plastic materials are specified in Section 06650 SOLID POLYMER FABRICATIONS.

2.5.2 Pedestals

Manufacturer's standard pedestal supports, with predrilled fastener holes, complete with fasteners and anchors, of 3 inch diameter stainless steel pipe or structural tube, with stainless steel pipe flange at top and bottom; floor anchored with concealed fasteners.

Furnish a minimum of two pedestals for each bench, with pedestal spacing not more than 1820 mm o.c.

PART 3 EXECUTION

3.1 ASSEMBLY AND INSTALLATION

Assemble lockers according to the locker manufacturer's instructions. Align lockers horizontally and vertically. Secure lockers to wall and base with screws as indicated. Bolt adjacent lockers together. Adjust doors to operate freely without sticking or binding and to ensure they close tightly. Secure gear lockers to walls and suspend lockers in center of room from ceiling supports as indicated.

3.2 NUMBERING SYSTEM

Install number plates on lockers consecutively with odd numbers on top and even numbers on bottom.

3.3 FIELD QUALITY CONTROL

3.3.1 Testing

Government may request performance-characteristic tests on assembled lockers in accordance with FS AA-L-00486. Lockers not conforming will be rejected.

3.3.2 Repairing

Remove and replace damaged and unacceptable portions of completed work with new.

3.3.3 Cleaning

Clean surfaces of the work, and adjacent surfaces soiled as a result of the work, in an approved manner. Remove equipment, surplus materials, and rubbish from the site.

-- End of Section --

SECTION TABLE OF CONTENTS

DIVISION 10 - SPECIALTIES

SECTION 10650A

OPERABLE PARTITIONS

08/00

PART 1 GENERAL

1.1 REFERENCES
1.2 GENERAL REQUIREMENTS
1.2.1 Manual Operation
1.3 SUBMITTALS
1.4 DELIVERY AND STORAGE
1.5 WARRANTY

PART 2 PRODUCTS

2.1 MATERIALS
2.1.1 Panel Surface Finish
2.1.2 Hardware
2.1.3 Sweep Strips
2.1.4 Track
2.1.5 Metal Soffit
2.1.6 Vinyl Restrictions
2.2 OPERABLE PARTITIONS
2.2.1 Panels
2.2.2 Seals
2.3 COLOR

PART 3 EXECUTION

3.1 INSTALLATION

-- End of Section Table of Contents --

UFGS-10650A (August 2000)

SECTION 10650A

OPERABLE PARTITIONS
08/00

PART 1 GENERAL

1.1 REFERENCES

The publications listed below form a part of this specification to the extent referenced. The publications are referred to in the text by basic designation only.

AMERICAN SOCIETY FOR TESTING AND MATERIALS (ASTM)

ASTM E 84	(1999) Surface Burning Characteristics of Building Materials
ASTM E 90	(1999) Laboratory Measurement of Airborne Sound Transmission Loss of Building Partitions
ASTM E 413	(1987; R 1999) Rating Sound Insulation

1.2 GENERAL REQUIREMENTS

The Contractor shall supply and install flat wall, manual operation, acoustical operable partitions as shown on the drawings including all hardware, seals, track and rollers as needed to close the specified opening. The partition shall be made up of a series of rigid, flat wall panels; each panel being a one-piece assembly nominally 48 inches wide. Unless otherwise specified, the wall shall comprise the least number of panels. The mechanical seal of the panel shall actuate with a single operating action. Configuration shall be paired panels.

1.2.1 Manual Operation

The manual operation shall be accomplished with less than 20 lbf force to start movement at the rate of 3.33 ft/s (200 ft/min). A removable handle shall be used to extend and retract the bottom operable seals; vertical movement of seals shall be 2 inches. Closure to the lead wall shall be by use of a flexible bulb; final closing shall be accomplished by means of a lever exerting pressure against wall.

1.3 SUBMITTALS

All items designated with a G, including product literature, calculations, component data, certificates, diagrams and drawings, shall be submitted concurrently in one complete system submittal. Omission of any required submittal item from the package shall be sufficient cause for disapproval of the entire submittal. Unless otherwise indicated in the submittal review commentary, disapproval of any item within the package shall require a re-submittal of the entire system package, in which all deficiencies

shall be corrected. Government approval is required for submittals with a "G" designation; submittals not having a "G" designation are for information only. When used, a designation following the "G" designation identifies the office that will review the submittal for the Government. The following shall be submitted in accordance with Section 01330 SUBMITTAL PROCEDURES:

SD-02 Shop Drawings

Operable Partitions

Drawings containing complete schematic diagrams and details required to demonstrate that the system has been coordinated and will properly function as a unit. Drawings shall show proposed layout and anchorage of equipment and appurtenances, and equipment relationship to other parts of the work including clearances for maintenance and operation.

SD-03 Product Data

Operable Partitions

Manufacturer's descriptive data, performance charts, catalog cuts, and installation instructions.

SD-04 Samples

Operable Partitions

Color samples of specified surfaces and finishes to match those specified. Finish and color requirements shall not be limited to manufacturer's standard selections in order to meet these requirements.

SD-07 Certificates

Materials
Operable Partitions

Certificate attesting that the materials meet the requirements specified and that partitions have specified acoustical and flame retardant properties, as determined by test.

1.4 DELIVERY AND STORAGE

Materials shall be delivered to the jobsite in the manufacturer's original, unopened packages and shall be stored with protection from the weather, humidity and temperature variations, dirt and dust, or other contaminants.

1.5 WARRANTY

Manufacturer's standard performance guarantees or warranties that extend beyond a 1 year period shall be provided.

PART 2 PRODUCTS

2.1 MATERIALS

Material and equipment shall be the standard products of a manufacturer

regularly engaged in the manufacture of such products and shall essentially duplicate items that have been in satisfactory use for at least 2 year prior to bid opening. Equipment shall be supported by a service organization that is, in the opinion of the Contracting Officer, reasonably convenient to the site. Door and partition finishes shall have a Class A rating when tested in accordance with ASTM E 84.

2.1.1 Panel Surface Finish

Panel surface finish shall be a manufacturer's standard vinyl coated fabric. Color shall match that listed in the drawing Interior Finish Materials Legend.

2.1.2 Hardware

Operable partitions shall have manufacturer's standard hardware. Hardware shall be anodized aluminum with a natural finish, chrome plated or brass plated metal, or painted finish.

2.1.3 Sweep Strips

Sweep strips shall be vinyl or other material which will not crack or craze with severe usage. Sweep strip shall control STC to the specified rating.

2.1.4 Track

Track shall be recessed as shown and shall be of extruded aluminum or enamel finish steel. Track shall be manufacturer's standard product designed for the weight of the finished partition, including door. Track sections shall be provided in the maximum lengths practicable, not less than 6 feet long except for narrow doors and at ends of runs where short length is required. Suitable joint devices such as interlocking keys shall be provided at each joint to provide permanent alignment of track.

2.1.5 Metal Soffit

Soffit shall be provided when steel track is recessed. Soffit shall be of metal of adequate thickness to protect the ceiling from damage by door operation and shall be provided with the door manufacturer's standard neutral-color applied finish. Soffit on aluminum track shall be an integral part of the track.

2.1.6 Vinyl Restrictions

Vinyl's shall contain a non-mercury based mildewcide and shall be manufactured without the use of cadmium-based stabilizers.

2.2 OPERABLE PARTITIONS

Operable partitions shall consist of top hung ball bearing carriers which support paired modular panels. Partition finish shall have a flame spread rating of not more than 25 in accordance with ASTM E 84.

2.2.1 Panels

Panels shall be constructed of minimum 16 gauge thick steel frames with minimum 22 gauge thick face panels spot welded to the frame. Panels shall be not more than 4 feet wide, except for end closure panels, and shall be full height to track. Panels shall lock in place to form a stable, rigid

partition; low profile hinges shall project 1/4 inch maximum from panel edge. Panels shall be surfaced with vinyl coated fabric which wraps around the vertical panel edges without vertical trim. Panel thickness (4 inch nominal) and composition shall be designed to provide an STC rating of not less than 50 in accordance with ASTM E 90 and ASTM E 413.

2.2.2 Seals

Bottom seals shall consist of a vinyl sweep mechanical seal which will expand in place or shall be accomplished by using panels which can be lowered by a removable operating device. Vertical seal between panels shall be anodized, architectural grade, aluminum extrusion with vinyl sound seal.

2.3 COLOR

Color shall be in accordance with Interior Finish Legend included in the drawings.

PART 3 EXECUTION

3.1 INSTALLATION

Installation shall be in accordance with the manufacturer's approved installation instructions.

-- End of Section --

SECTION TABLE OF CONTENTS

DIVISION 10 - SPECIALTIES

SECTION 10716N

STORM SHUTTERS

08/01

PART 1 GENERAL

1.1 REFERENCES
1.2 DEFINITIONS
1.2.1 Tropical Cyclones
1.2.2 Weather Warnings
1.2.3 Wind Velocities
1.3 SUBMITTALS
1.4 DELIVERY, STORAGE, AND HANDLING
1.5 PERFORMANCE REQUIREMENTS

PART 2 PRODUCTS

2.1 MATERIALS
2.1.1 Aluminum
2.2 SHUTTERS
2.2.1 Roll Shutters
2.2.1.1 Slats
2.2.1.2 Housing
2.2.1.3 Frame and Tracks
2.2.1.4 Structural Supports
2.2.1.5 Reel and Counterbalance Assembly
2.2.1.6 Locking Device
2.2.1.7 Manual Operation (Override)
2.2.1.8 Electrical Operation (Primary)
2.2.1.9 Accessories
2.3 FINISHES
2.3.1 Aluminum Surfaces
2.3.2 Concealed Metal Surfaces

PART 3 EXECUTION

3.1 EXAMINATION
3.1.1 Field Measurement
3.2 INSTALLATION
3.2.1 Method of Installation
3.2.2 Dissimilar Materials
3.3 ADJUSTING

-- End of Section Table of Contents --

UFGS-10716N (August 2001)

SECTION 10716N

STORM SHUTTERS
08/01

PART 1 GENERAL

1.1 REFERENCES

The publications listed below form a part of this specification to the extent referenced. The publications are referred to within the text by the basic designation only.

AMERICAN ARCHITECTURAL MANUFACTURERS ASSOCIATION (AAMA)

AAMA 101	(1997) Aluminum, Vinyl (PVC) and Wood Windows and Glass Doors
AAMA 2604	(1992; Addendum 1995) High Performance Organic Coatings on Architectural Extrusions and Panels
AAMA 611	(1977) Electrolytically Deposited Color Anodic Finishes for Architectural Aluminum

ASTM INTERNATIONAL (ASTM)

ASTM A 653/A 653M	(1998) Steel Sheet, Zinc-Coated (Galvanized) or Zinc-Iron Alloy-Coated (Galvannealed) by the Hot-Dip Process
ASTM B 221	(1996) Aluminum and Aluminum-Alloy Extruded Bars, Rods, Wire, Profiles, and Tubes

1.2 DEFINITIONS

1.2.1 Tropical Cyclones

Tropical Cyclone is a terminology for storms of cyclonic atmospheric conditions originating over tropical waters. The following are international classifications for tropical cyclones:

a. Tropical disturbance: Thunderstorms in the tropics for 24 hours or more.

b. Tropical depression: Wind speed 38 miles per hour (33 knots) or less.

c. Tropical storm: Wind speed range of 39 to 73 miles per hour (34 to 63 knots).

d. Hurricane: Wind speed 74 miles per hour or more (64 knots).

1.2.2 Weather Warnings

Weather warnings are issued for expected wind velocities. The following are international terminologies issued for weather warnings:

a. Gale warnings: Issued for expected wind velocity of 39-54 miles per hour (34-47 knots).

b. Storm warnings: Issued for expected wind velocity of 55-73 miles per hour

c. Hurricane watch: Issued for hurricane conditions within 36 hours.

d. Hurricane warning: Issued for sustained winds of 74 miles per hour expected in 24 hours or less.

1.2.3 Wind Velocities

Wind velocities for tropical cyclones and weather warnings are measurements taken 32 feet 10 inches above ground level.

1.3 SUBMITTALS

Government approval is required for submittals with a "G" designation; submittals not having a "G" designation are for information only or as otherwise designated. When used, a designation following the "G" designation identifies the office that will review the submittal for the Government. The following shall be submitted in accordance with Section 01330 SUBMITTAL PROCEDURES:

SD-02 Shop Drawings

Roll shutters; G, AE

Submit plans coordinated with shutter schedule, elevations of shutter units, half-sized sections, thickness and gages of materials, fastenings, method of anchorage, size and spacings of anchors, and location of hardware. Include frame and mullion details, details of installation, and connection to other work, including details of adjacent window and wall construction.

Schedule of shutters

Identification numbers, locations, sizes, and types of shutters.

SD-03 Product Data

Roll shutters

Submit for shutters and accessories.

SD-10 Operation and Maintenance Data

Shutters

Submit data package in accordance with Section 01781 OPERATION AND MAINTENANCE DATA.

1.4 DELIVERY, STORAGE, AND HANDLING

Deliver products to the project site in undamaged condition. Store products out of contact with the ground, under weathertight covering, and protect against damage. Damaged shutters shall be repaired to an "as new" condition as approved by the Contracting Officer. If shutters cannot be repaired, the Contractor shall replace the damaged units.

1.5 PERFORMANCE REQUIREMENTS

Storm shutters shall be fabricated and reinforced to withstand a minimum wind load 60 pounds per square foot. The maximum allowable deflection is 1/30 of the opening width or 2 inches, whichever is less. The maximum deflection shall be a minimum of one inch from the window glass.

PART 2 PRODUCTS

2.1 MATERIALS

2.1.1 Aluminum

AAMA 101 and ASTM B 221.

2.2 SHUTTERS

2.2.1 Roll Shutters

2.2.1.1 Slats

a. Aluminum slats. Roll-formed aluminum 6063-T6, double wall insulated slats, curved profile 0.50 inch thick and 2 inches wide, with bottom bars complete with weatherseal. Maximum wall thickness of 0.50 inch.

2.2.1.2 Housing

Aluminum, 0.04 inch thick with cast aluminum end frame covers.

2.2.1.3 Frame and Tracks

Extruded aluminum alloy, 6063-T6, standard with the manufacturer.

2.2.1.4 Structural Supports

Provide storm bar assembly of jamb tracks and mullions of aluminum tube and channel extrusions, 6063-T5, as indicated. Finish shall be the same as the frame and tracks.

2.2.1.5 Reel and Counterbalance Assembly

a. Extruded aluminum reel, 6063-T.

b. Spring barrel or shaft shall be corrosion resistant metal of sufficient strength with maximum deflection of 0.03 inch per foot of span. Barrel or shaft shall house oil-tempered, helically wound steel spring. Springs shall be adjustable.

2.2.1.6 Locking Device

The operation of the roll shutter shall automatically hold the shutters in a closed position. The shutter shall be closed from the inside.

2.2.1.7 Manual Operation (Override)

a. Pole Crank Operator shall be fully encased with self-lubricating hardened steel gears. The crank shall be removable and located at the right jamb.

2.2.1.8 Electrical Operation (Primary)

a. Motor will be 110 volt, 60 HZ UL listed, thermally protected.

b. Provide for manual override operation in the event of power failure.

c. Provide conduit, wiring, and mounting of controls in accordance with Section 16415A ELECTRICAL WORK, INTERIOR.

2.2.1.9 Accessories

Provide shutters complete with hardware, stainless steel fasteners, anchors, and other items necessary for complete installation, resist windloads and corrosion for proper operation.

2.3 FINISHES

2.3.1 Aluminum Surfaces

Provide exposed aluminum with factory finish of anodic coating or organic coating.

a. Anodic Coating: AAMA 611

Integral color-anodized, designation AA-M10-C22-A42, Architectural Class I (0.07 mil or thicker).

Electrolytically deposited color-anodized, designation AA-M10-C22-A44, Architectural Class I (0.7 mil or thicker). The finish color shall be as indicted.

b. Organic Coating

Clean and prime aluminum surfaces. Powder coated finish shall be a high performance finish in accordance with AAMA 2604 with total dry film thickness of not less than 1.2 mil. The finish color shall be as indicated.

2.3.2 Concealed Metal Surfaces

a. Concealed metal surfaces shall be stainless steel.

b. Surfaces to receive a finish shall have a zinc coating, a phosphate treatment, and a shop prime coat of rust-inhibitive paint. The galvanized coating shall conform to ASTM A 653/A 653M, coating designation products. The prime coat shall be compatible with phosphate treatments and applied by dipping or spraying.

PART 3 EXECUTION

3.1 EXAMINATION

3.1.1 Field Measurement

Field measure for exact dimensions to fabricate shutters on exterior surface of wall.

3.2 INSTALLATION

3.2.1 Method of Installation

Install shutters on exterior wall surfaces with stainless steel fasteners and in accordance with manufacturer's printed instructions. Locate the fasteners a minimum of 3 inches from the concrete masonry edge.

3.2.2 Dissimilar Materials

Where aluminum surfaces are in contact or fastened to masonry, concrete, wood, or dissimilar metals, except stainless steel or zinc, the aluminum surface shall be protected from dissimilar materials as recommended in the Appendix to AAMA 101. Surfaces in contact with sealants after installation shall not be coated with any type of protective material.

3.3 ADJUSTING

Test every shutter for ease of operations and lock position in the presence of the Contracting Officer. Lubricate and adjust the roll, accordion, and hinged shutters to operate freely. Adjust the frames of removable shutters to receive the panels.

-- End of Section --

SECTION TABLE OF CONTENTS

DIVISION 10 - SPECIALTIES

SECTION 10800

TOILET ACCESSORIES

07/02

PART 1 GENERAL

1.1 REFERENCES
1.2 SUBMITTALS
1.3 DELIVERY, STORAGE, AND HANDLING
1.4 WARRANTY

PART 2 PRODUCTS

2.1 MANUFACTURED UNITS
2.1.1 Anchors and Fasteners
2.1.2 Finishes
2.2 ACCESSORY ITEMS
2.2.1 Grab Bar (GB)
2.2.2 Mirrors, Glass, Full Width (FLM)
2.2.3 Mirror, Tilt (MTT)
2.2.4 Combination Paper Towel Dispenser/Waste Receptacle Units (PTDW)
2.2.5 Sanitary Napkin Disposer (SND)
2.2.6 Robe Hook (RH)
2.2.7 Shower Curtain Rods (SCR)
2.2.8 Soap Dispenser (SD)
2.2.9 Soap Holder (SH)
2.2.10 Shelf, Metal, Heavy Duty
2.2.11 Towel Pin (TP)
2.2.12 Toilet Tissue Dispenser (TTD)

PART 3 EXECUTION

3.1 INSTALLATION
3.1.1 Recessed Accessories
3.1.2 Surface Mounted Accessories
3.2 CLEANING
3.3 SCHEDULE

-- End of Section Table of Contents --

UFGS-10800 (July 2002)

SECTION 10800

TOILET ACCESSORIES
07/02

PART 1 GENERAL

1.1 REFERENCES

The publications listed below form a part of this specification to the extent referenced. The publications are referred to in the text by basic designation only.

AMERICAN SOCIETY FOR TESTING AND MATERIALS (ASTM)

ASTM C 1036 (1991; R 1997) Flat Glass

1.2 SUBMITTALS

Government approval is required for submittals with a "G" designation; submittals not having a "G" designation are for information only or as otherwise designated. When used, a designation following the "G" designation identifies the office that will review the submittal for the Government. The following shall be submitted in accordance with Section 01330 SUBMITTAL PROCEDURES:

SD-03 Product Data

Finishes
Accessory Items

Manufacturer's descriptive data and catalog cuts indicating materials of construction, fasteners proposed for use for each type of wall construction, mounting instructions, operation instructions, and cleaning instructions.

SD-07 Certificates

Accessory Items

Submit for each type of accessory specified, attesting that the items meet the specified requirements.

1.3 DELIVERY, STORAGE, AND HANDLING

Toilet accessories shall be wrapped for shipment and storage, delivered to the jobsite in manufacturer's original packaging, and stored in a clean, dry area protected from construction damage and vandalism.

1.4 WARRANTY

Manufacturer's standard performance guarantees or warranties that extend beyond a 1 year period shall be provided.

PART 2 PRODUCTS

2.1 MANUFACTURED UNITS

Toilet accessories shall be provided where indicated in accordance with paragraph SCHEDULE. Porcelain type, tile-wall accessories are specified in Section 09310 CERAMIC TILE. Each accessory item shall be complete with the necessary mounting plates and shall be of sturdy construction with corrosion resistant surface.

2.1.1 Anchors and Fasteners

Anchors and fasteners shall be capable of developing a restraining force commensurate with the strength of the accessory to be mounted and shall be suited for use with the supporting construction. Exposed fasteners shall be of tamperproof design and shall be finished to match the accessory.

2.1.2 Finishes

Except where noted otherwise, finishes on metal shall be provided as follows:

Metal	Finish
Stainless steel	No. 4 satin finish
Carbon steel, copper alloy, and brass	Chromium plated, bright

2.2 ACCESSORY ITEMS

Accessory items shall conform to the requirements specified below.

2.2.1 Grab Bar (GB)

Grab bar shall be 18 gauge, 1-1/4 inches OD Type 304 stainless steel. Grab bar shall be form and length as indicated. Concealed mounting flange shall have mounting holes concealed. Grab bar shall have satin finish. Installed bars shall be capable of withstanding a 500 pound vertical load without coming loose from the fastenings and without obvious permanent deformation. Space between wall and grab bar shall be 1-1/2 inch.

2.2.2 Mirrors, Glass, Full Width (FLM)

Glass for mirrors shall be Type I transparent flat type, Class 1-clear. Glazing Quality q1 1/4 inch thick conforming to ASTM C 1036. Glass shall be coated on one surface with silver coating, copper protective coating, and mirror backing paint. Silver coating shall be highly adhesive pure silver coating of a thickness which shall provide reflectivity of 83 percent or more of incident light when viewed through 1/4 inch thick glass, and shall be free of pinholes or other defects. Copper protective coating shall be pure bright reflective copper, homogeneous without sludge, pinholes or other defects, and shall be of proper thickness to prevent "adhesion pull" by mirror backing paint. Mirror backing paint shall consist of two coats of special scratch and abrasion-resistant paint and shall be baked in uniform thickness to provide a protection for silver and copper coatings which will permit normal cutting and edge fabrication.

Mirrors shall have angle frame.

2.2.3 Mirror, Tilt (MTT)

Tilt mirror shall be surface mounted and shall provide full visibility for persons in a wheelchair. Mirror shall have fixed tilt, extending at least 4 inches from the wall at the top and tapering to 1 inch at the bottom. Size shall be in accordance with the drawings. Glass for mirrors shall conform to ASTM C 1036 and paragraph Mirror, Glass.

2.2.4 Combination Paper Towel Dispenser/Waste Receptacle Units (PTDW)

Dispenser/receptacle shall be recessed and shall have a capacity of 400 sheets of C-fold, single-fold, or quarter-fold towel. Waste receptacle shall be designed to be locked in unit and removable for service. Locking mechanism shall be tumbler key lock. Waste receptacle shall have a capacity of 13 gallons in room 163 (main bldg) and 2 gallons elsewhere.. Unit shall be fabricated of not less than 0.30 inch stainless steel welded construction with all exposed surfaces having a satin finish. Waste receptacle that accepts reusable liner standard for unit manufacturer shall be provided.

2.2.5 Sanitary Napkin Disposer (SND)

Sanitary napkin disposal shall be constructed of Type 304 stainless steel with removable leak-proof receptacle for disposable liners. Fifty disposable liners of the type standard with the manufacturer shall be provided. Receptacle shall be retained in cabinet by tumbler lock. Disposer shall be provided with a door for inserting disposed napkins, and shall be surface mounted.

2.2.6 Robe Hook (RH)

Robe hook shall be fabricated from chromium plated brass or stainless steel and shall have two hooks, projecting 2-1/2 to 4 inches from wall.

2.2.7 Shower Curtain Rods (SCR)

Shower curtain rods shall be Type 304 stainless steel 1-1/4 inch OD by 0.049 inch minimum straight to meet installation conditions.

2.2.8 Soap Dispenser (SD)

Soap dispenser shall be surface mounted, liquid type consisting of a vertical Type 304 stainless steel tank with holding capacity of 40 fluid ounces with a corrosion-resistant all-purpose valve that dispenses liquid soaps, lotions, detergents and antiseptic soaps.

2.2.9 Soap Holder (SH)

Soap holder shall be surface mounted Type 304 stainless steel. Separate supports shall be stainless steel.

2.2.10 Shelf, Metal, Heavy Duty

Heavy duty metal shelf shall be minimum of 18 gauge stainless steel with hemmed edges. Shelves over 30 inches shall be provided with intermediate supports. Supports shall be minimum of 16 gauge, shall be welded to the shelf, and shall be spaced no more than 30 inches apart. Shelf shall be

equipped with 3 spring-loaded cam mop holders and 4 utility hooks. Provide for janitor rooms.

2.2.11 Towel Pin (TP)

Towel pin shall have concealed wall fastenings, and a pin integral with or permanently fastened to wall flange. Maximum projection shall be 4 inches. Design shall be consistent with design of other accessory items. Finish shall be bright polish.

2.2.12 Toilet Tissue Dispenser (TTD)

Toilet tissue holder shall be Type II - surface mounted with two rolls of standard tissue stacked vertically. Cabinet shall be stainless steel, satin finish.

PART 3 EXECUTION

3.1 INSTALLATION

Surfaces of fastening devices exposed after installation shall have the same finish as the attached accessory. Exposed screw heads shall be oval. Install accessories at the location and height indicated. Protect exposed surfaces of accessories with strippable plastic or by other means until the installation is accepted. After acceptance of accessories, remove and dispose of strippable plastic protection. Coordinate accessory manufacturer's mounting details with other trades as their work progresses. Brackets, plates, anchoring devices and similar items used for mounting accessories in showers shall be bedded in a silicone or polysulphide sealant as they are set to provide a watertight installation. After installation, thoroughly clean exposed surfaces and restore damaged work to its original condition or replace with new work.

3.1.1 Recessed Accessories

Fasten accessories with wood screws to studs, blocking or rough frame in wood construction. Set anchors in mortar in masonry construction. Fasten to metal studs or framing with sheet metal screws in metal construction.

3.1.2 Surface Mounted Accessories

Mount on concealed backplates, unless specified otherwise. Accessories without backplates shall have concealed fasteners. Unless indicated or specified otherwise, install accessories with sheet metal screws or wood screws in lead-lined braided jute, teflon or neoprene sleeves, or lead expansion shields, or with toggle bolts or other approved fasteners as required by the construction. Install backplates in the same manner, or provide with lugs or anchors set in mortar, as required by the construction. Fasten accessories mounted on gypsum board and plaster walls without solid backing into the metal or wood studs or to solid wood blocking secured between wood studs, or to metal backplates secured to metal studs.

3.2 CLEANING

Material shall be cleaned in accordance with manufacturer's recommendations. Alkaline or abrasive agents shall not be used. Precautions shall be taken to avoid scratching or marring of surfaces.

3.3 SCHEDULE

Accessories Required

Room or Space	GB	FLM	MTT	PTDW	RW	SND	SCR	SD	SH	SHLF	TP	TTD
MAIN												
115	2	-	1	1	-	1	-	1	-	-	-	1
116	-	1	-	1	1	-	1	1	1	-	1	1
140	2	-	1	1	-	1	-	1	-	-	-	1
163	-	1	-	1	4	-	8	4	4	-	4	5
165	-	1	-	1	1	1	2	1	1	-	1	1
166	-	-	-	-	-	-	-	-	-	1	-	-
188	-	1	-	1	-	1	-	1	-	-	-	1
192	-	1	-	1	-	-	-	1	-	-	-	1
SATELLITE												
109	-	1	-	1	-	-	-	1	-	-	-	1
116	2	1	-	1	1	-	2	2	-	-	1	1
117	2	1	-	1	1	1	2	1	1	-	1	1
118	-	-	-	-	-	-	-	-	-	1	-	-
ALERT BLDG												
107	2	-	1	1	-	1	-	1	-	-	-	1

-- End of Section --

SECTION TABLE OF CONTENTS

DIVISION 11 - EQUIPMENT

SECTION 11400A

FOOD SERVICE EQUIPMENT

01/02

PART 1 GENERAL

1.1 REFERENCES
1.2 GENERAL REQUIREMENTS
1.2.1 Mechanical, Electrical, and Plumbing Work
1.2.2 Kitchen Fire Protection Systems
1.2.3 National Sanitation Foundation Standards
1.2.4 Verification of Dimensions and Coordination of Project Data
1.2.5 Standard Products
1.2.6 Nameplates
1.2.7 American Gas Association Laboratories Standards
1.2.8 Underwriters Laboratories Standards
1.3 SUBMITTALS
1.4 DELIVERY AND STORAGE
1.4.1 Delivery
1.4.2 Storage
1.4.3 Protection of Fixed/Fabricated Manufactured Equipment
1.4.4 Prohibited Use of Equipment
1.4.5 Damaged Equipment

PART 2 PRODUCTS

2.1 MATERIALS
2.1.1 Stainless Steel, Nonmagnetic
2.1.2 Stainless Steel Pipe and Tubing
2.1.3 Galvanizing Repair Compound
2.1.4 Brazing Material
2.1.5 Steel Structural Shapes for Framing
2.1.6 Coatings
2.1.6.1 Exterior Parts
2.1.6.2 Solder Material
2.2 EXHAUST HOODS OVER COOKING EQUIPMENT
2.2.1 Exhaust Duct
2.2.2 Hood Support
2.2.3 Integral Make-up Air System
2.2.4 Hood Lights and Wiring
2.2.5 Closure Panels
2.2.6 Wall Panels
2.2.7 Hand Held Fire Extinguishers
2.2.8 Filter Type Hoods
2.2.9 Grease Extracting Type Hoods
2.2.9.1 Construction
2.2.9.2 Internal Hood Fire Protection
2.3 UTILITY DISTRIBUTION SYSTEMS
2.3.1 Electrical Distribution Assembly
2.3.2 Mechanical Manifold Assembly
2.4 COOKING EQUIPMENT
2.4.1 Cojjercial Ranges

2.4.2 Residential Range
2.5 DISHWASHWASHERS
2.5.1 Operation and Controls
2.5.2 Standard Features
2.6 ELECTRICAL WORK
2.6.1 Installed Equipment Load
2.6.2 Electrical Equipment and Components
2.6.3 Cords and Caps
2.6.4 Switches and Controls
2.6.5 Motors
2.6.6 Heating Elements
2.6.7 Receptacles and Switches
2.6.8 Light Fixtures
2.6.9 Final Electrical Connection Provisions
2.6.10 Lamps
2.7 COLOR

PART 3 EXECUTION

3.1 INSTALLATION
3.1.1 Equipment Connections
3.1.2 Backflow Preventers
3.1.3 Gas Equipment
3.1.4 Plumbing Work
3.2 CONSTRUCTION OF FABRICATED EQUIPMENT
3.2.1 Grinding, Polishing, and Finishing
3.2.2 Fastening Devices
3.2.3 Welding
3.2.3.1 Welding Rods
3.2.3.2 Weld Quality
3.2.4 Soldering
3.2.5 Brazing
3.3 TESTING
3.3.1 Performance Tests
3.3.2 Operating Tests
3.3.3 Clean and Adjust
3.3.4 Equipment Start-Up/Demonstration

-- End of Section Table of Contents --

UFGS-11400A (January 2002)

SECTION 11400A

FOOD SERVICE EQUIPMENT
01/02

PART 1 GENERAL

1.1 REFERENCES

The publications listed below form a part of this specification to the extent referenced. The publications are referred to in the text by basic designation only.

AMERICAN CONFERENCE OF GOVERNMENTAL INDUSTRIAL HYGIENISTS (ACGIH)

ACGIH-2092S	(1998) Industrial Ventilation: A Manual of Recommended Practice

AMERICAN GAS ASSOCIATION LABORATORIES (AGAL)

AGAL Directory	(1996) Directory of AGA and CGA Certified Appliances and Accessories

AMERICAN SOCIETY FOR TESTING AND MATERIALS (ASTM)

ASTM A 123/A 123M	(2001) Zinc (Hot-Dip Galvanized) Coatings on Iron and Steel Products
ASTM A 167	(1999) Stainless and Heat-Resisting Chromium-Nickel Steel Plate, Sheet, and Strip
ASTM A 240/A 240M	(2000) Heat-Resisting Chromium and Chromium-Nickel Stainless Steel Plate, Sheet, and Strip for Pressure Vessels
ASTM A 269	(2000) Seamless and Welded Austenitic Stainless Steel Tubing for General Service
ASTM A 36/A 36M	(2000a) Carbon Structural Steel
ASTM B 32	(1996) Solder Metal
ASTM D 520	(2000) Zinc Dust Pigment

AMERICAN WELDING SOCIETY (AWS)

AWS A5.8	(1992) Filler Metals for Brazing and Braze Welding

NATIONAL FIRE PROTECTION ASSOCIATION (NFPA)

NFPA 54	(1999) National Fuel Gas Code
NFPA 70	(1999) National Electrical Code

NFPA 96	(1998) Ventilation Control and Fire Protection of Commercial Cooking Equipment

NSF INTERNATIONAL (NSF)

NSF 2	(1996) Food Equipment
NSF Product Listing	(1994) Listings of Food Equipment and Related Products, Components, and Materials

SHEET METAL & AIR CONDITIONING CONTRACTORS' NATIONAL ASSOCIATION (SMACNA)

SMACNA HVAC Duct Const Stds	(1995; Addenda Nov 1997) HVAC Duct Construction Standards - Metal and Flexible

UNDERWRITERS LABORATORIES (UL)

UL 197	(1993; Rev thru Jan 2000) Commercial Electric Cooking Appliances
UL 471	(1995; Rev thru Apr 1998) Commercial Refrigerators and Freezers
UL 489	(1996; Rev thru Dec 1998) Molded-Case Circuit Breakers, Molded-Case Switches, and Circuit-Breaker Enclosures
UL 710	(1995; Rev thru Apr 1999) Exhaust Hoods for Commercial Cooking Equipment
UL Elec Equip Dir	(1999) Electrical Appliance and Utilization Equipment Directory

1.2 GENERAL REQUIREMENTS

Food service equipment shall be of the sizes and types shown. Equipment, materials, and fixtures required for use in conjunction with the items to be furnished by the Government shall be furnished and installed by the Contractor. Equipment, materials, and fixtures indicated on the drawings and schedules shown as Contractor furnished and installed, shall be furnished and installed by the Contractor.

1.2.1 Mechanical, Electrical, and Plumbing Work

Plumbing systems, including final connections, shall be in accordance with Section 15400A PLUMBING, GENERAL PURPOSE. Electrical equipment, motors, wiring, and final connections shall be in accordance with Section 16415A ELECTRICAL WORK, INTERIOR. Gas piping and accessories, including final connections, shall be in accordance with Section 15190A GAS PIPING SYSTEMS . Duct work and accessories shall be in accordance with Section 15895 AIR SUPPLY, DISTRIBUTION, VENTILATION, AND EXHAUST SYSTEM. Painting shall be in accordance with Section 09900 PAINTS AND COATINGS. Air-conditioning systems shall be in accordance with Section 15700AUNITARY HEATING AND COOLING EQUIPMENT.

1.2.2 Kitchen Fire Protection Systems

Each exhaust hood system that serves cooking equipment, associated exhaust hood system ducts, and all cooking equipment served by the exhaust hood system shall be protected with a wet chemical fire extinguishing system. The wet chemical fire extinguishing systems shall be in accordance with Section 13965A WET CHEMICAL FIRE EXTINGUISHING SYSTEM. Grease extracting type hoods that have an internal hood fire protection system do not require wet chemical fire extinguishing protection for those components of the exhaust system, and for cooking equipment protected by a UL listed internal hood fire protection system complying to NFPA 96.

1.2.3 National Sanitation Foundation Standards

Food service equipment shall meet the requirements set forth by the National Sanitation Foundation (NSF). Acceptable evidence of meeting the requirements of the applicable NSF standards shall be either the equipment listed in NSF Product Listing displaying the NSF seal for the year the equipment was manufactured, a certification issued for special or specific food service equipment by NSF under their special one time contract evaluation and certification, or a certified test report from an independent testing laboratory, approved by the Office of the Surgeon General, indicating that the specific food service equipment has been tested and conforms to the applicable NSF standards.

1.2.4 Verification of Dimensions and Coordination of Project Data

The Contractor shall become familiar with all details of the work and shall advise the Contracting Officer of any discrepancy before performing any work. The Contractor shall perform the following:

a. Horizontal and vertical dimensions shall be field verified.

b. Contract drawings and submittal data shall be reviewed for accuracy and completeness.

c. The installed utility capacity and location shall be field checked.

d. Critical systems/components shall be reviewed for application and capacities such as for exhaust hoods, refrigeration systems, fire suppression systems, gas, water, and steam/condensate line sizes and manifold configurations.

e. Delivery shall be coordinated for access through finished openings and vertical handling limitation within the building.

1.2.5 Standard Products

Materials and equipment shall be the standard products of manufacturer regularly engaged in the manufacture of the products and shall essentially duplicate items that have been in satisfactory use for at least 2 years prior to bid opening. The experience used shall include applications of equipment and materials under similar circumstances and of similar size. When two or more of the same products are supplied they shall be products of one manufacturer. Equipment shall be supported by a service organization that is, in the opinion of the Contracting Officer, reasonably convenient to the site.

1.2.6 Nameplates

Each item of equipment shall bear a stainless steel, aluminum, or engraved polyester nameplate, as standard with the manufacturer, located in a conspicuous position and permanently fastened to the equipment. Name or identification plates shall be of the size standard with the manufacturer for the particular piece of equipment provided. Name plates shall reflect the name of the manufacturer/trade name, serial number, make, and model number, pertinent ratings, operating characteristics, and other information as standard with the manufacturer, date of manufacture, electrical characteristics, and other applicable data, such as flow rate, temperature, pressure, capacity, and material of construction. Separate equipment identification plates with the contract number marked thereon, shall be securely fastened to the surface of each piece of equipment.

1.2.7 American Gas Association Laboratories Standards

Gas-burning equipment shall be designed for operation with the type of gas specified and shall be approved by AGAL. Acceptable evidence of meeting the requirements of the applicable AGAL Directory standards shall be either AGAL mark on equipment, a photostatic copy of the AGAL appliance certificate, a listing of the specific food service equipment or appliance in the AGAL Directory of Certified Appliances and Accessories, or a certified test report from a nationally recognized independent testing laboratory, indicating that the specified equipment has been tested and conforms to the requirements of the applicable AGAL standards.

1.2.8 Underwriters Laboratories Standards

Electrically operated equipment shall be in accordance with applicable UL standards such as UL 471, UL 489, UL 710 and UL 197. Evidence of meeting the requirements shall be a UL label on the equipment, a UL listing mark per UL Elec Equip Dir or a certified test report from a nationally recognized independent testing laboratory indicating that the specific food service equipment has been tested and conforms to the applicable UL standards.

1.3 SUBMITTALS

Government approval is required for submittals with a "G" designation; submittals not having a "G" designation are for information only. When used, a designation following the "G" designation identifies the office that will review the submittal for the Government. The following shall be submitted in accordance with Section 01330 SUBMITTAL PROCEDURES:

SD-02 Shop Drawings

Food Service Equipment;G, AE
Installation;G, AE

Data consisting of a complete list of equipment and materials. Detail drawings showing complete wiring, piping, and schematic diagrams, and any other details required to demonstrate that the system has been coordinated and will properly function as a unit. Drawings shall show proposed layout and anchorage of equipment and appurtenances, and equipment relationship to other parts of the work, including clearances for maintenance and operation.

a. Detail drawings by Contractor shall be separate drawings and

shall be the contractor's standard sheet size, but not smaller than the contract drawings, and indicate the food service equipment and cold storage assemblies with itemized schedule, and special conditions drawings indicating size and location of slab depressions, cores, wall openings, blockouts, ceiling pockets, blocking grounds, access panels, and above ceiling hanger assemblies, rough-in plumbing/mechanical systems and rough-in electrical systems.

b. Detail drawings by manufacturer shall be separate drawings; sheet size shall be manufacturer's standard size and indicate item number, name, and quantity, construction details, sections, and elevations, adjacent walls, columns, and equipment, plumbing and electrical schematics, and fabricated fixtures with single electrical or plumbing connection, and service access panels required for maintenance or replacement of mechanical or electrical components.

c. Detail drawings by the Contractor that show the size, type, and location of equipment drain lines, and floor drains. Drawings shall indicate drain lines from equipment, distances of drain lines and floor drain receptacles from equipment and aisles, and elevation views of drain piping and floor drains.

SD-03 Product Data

Food Service Equipment;G, AE

Manufacturer's descriptive and technical literature, performance charts and curves, catalog cuts, and installation instructions. Brochures shall have front and rear protective covers with labeled project name and include an index indicating item number, quantity, description, and manufacturer, a fly sheet for each component indicating item number, name, quantity, manufacturer, optional equipment, modification, special instruction, and utility requirements, and catalog specifications sheets.

SD-06 Test Reports

Testing

Test reports in booklet format showing all field tests performed to prove compliance with the specified performance criteria, upon completion and testing of the installed system. Each test report shall indicate the final position of controls.

SD-10 Operation and Maintenance Data

Food Service Equipment

Six complete copies of the service manual, not later than 3 months prior to the date of beneficial occupancy, with data for each different item of material and equipment specified. Service manuals shall include:

a. Front and rear protective covers with labeled project name.

b. Index indicating item number, quantity, description, manufacturer's name, and model number.

c. Maintenance instructions for stainless steel and plastic laminate.

d. Manufacturer's catalog specification sheets and manufacturer's detail and control drawings.

e. Manufacturer's operation manual outlining the step-by-step procedures for equipment installation, startup, basic operation features, and operation shutdown.

f. Manufacturer's maintenance manual listing routine maintenance procedures, possible breakdowns, repairs, and troubleshooting guides. The instructions shall include simplified diagrams for the equipment as installed.

g. Manufacturer's list of parts and supplies with current unit price and address of manufacturer's parts supply warehouse.

1.4 DELIVERY AND STORAGE

1.4.1 Delivery

Unless otherwise directed, the following procedures shall apply:

a. Field assembled fixed equipment integrated into structure shall be sent to jobsite when required.

b. Fixed equipment not integrated into structure shall be sent to the jobsite after completion of finished ceilings, lighting, and acidizing of the finished floor and wall systems, including painting.

c. Major movable equipment shall be delivered to inventory in a secured area for interim jobsite storage, or if secured area is not available, when fixed equipment installation/clean-up has been completed.

d. Minor appliances and loose items shall be delivered to the jobsite when the Contracting Officer is prepared to receive and inventory such items.

1.4.2 Storage

Items delivered and placed into storage shall be stored with protection from weather, humidity, and temperature variation, dirt and dust, or other contaminants.

1.4.3 Protection of Fixed/Fabricated Manufactured Equipment

Fiberboard or plywood shall be taped to surfaces as required by equipment shape and installation access requirements.

1.4.4 Prohibited Use of Equipment

Food service equipment shall not be used as tool and material storage, work bench, scaffold, or stacking area.

1.4.5 Damaged Equipment

Contractor shall immediately submit documentation to the Contracting Officer with a recommendation of action for repair or replacement and the impact on project schedule.

PART 2 PRODUCTS

2.1 MATERIALS

The Contractor shall comply with EPA requirements in accordance with Section 01670 RECYCLED / RECOVERED MATERIALS. Other materials shall conform to the following:

2.1.1 Stainless Steel, Nonmagnetic

ASTM A 167 or ASTM A 240/A 240M: 18-8, 300 Series, austenitic, polished to No. 3 or 4 finish on exposed surfaces.

2.1.2 Stainless Steel Pipe and Tubing

ASTM A 269. Pipe and tubing shall be seamless or welded, of the gauge specified, of true roundness, and of material as specified for stainless steel. Seamless tubing shall be thoroughly annealed, pickled, and ground smooth. Welded tubing shall be thoroughly heat-treated, quenched to eliminate carbide precipitation and then drawn true to size and roundness, and ground. Tubing shall be given a No. 3 or 4 finish when exposed to view.

2.1.3 Galvanizing Repair Compound

ASTM D 520, Type I pigment.

2.1.4 Brazing Material

AWS A5.8, class shall be as applicable.

2.1.5 Steel Structural Shapes for Framing

ASTM A 36/A 36M. Structural shapes shall be uniform, ductile in quality, and shall be free of hard spots, runs, checks, cracks and other surface defects. Sections shall be galvanized by the hot-dip process, conforming to ASTM A 123/A 123M.

2.1.6 Coatings

Coatings shall be of a durable, nontoxic, nondusting, nonflaking, and mildew-resistant type, suitable for use with food service equipment and in conformance with NSF 2. Application shall be in accordance with the recommendations of the manufacturer.

2.1.6.1 Exterior Parts

Exterior, galvanized parts, exposed members of framework, and wrought steel pipe, where specified to be painted, shall be cleaned, and free of foreign matter before applying a rust inhibiting prime and two coats of epoxy-based paint in accordance with Section 09900 PAINTS AND COATINGS, unless otherwise specified. Color shall be selected by the Contracting Officer from manufacturer's standard colors.

2.1.6.2 Solder Material

ASTM B 32, Sn96.

2.2 EXHAUST HOODS OVER COOKING EQUIPMENT

Hoods and duct work systems shall conform to ACGIH-2092S, NFPA 96, and SMACNA HVAC Duct Const Stds. Hoods shall be U.L. listed per UL 710 and NSF approved. These standards represent only the minimum requirements; subsequent subsections of this clause may require construction that exceeds these minimum requirements. Unless otherwise specified, ducts and hoods shall be secured to building so as to be level and free from vibration under all conditions of operations.

2.2.1 Exhaust Duct

Exhaust duct for canopy or noncanopy hoods shall be constructed of 18 gauge stainless steel and shall have external seams welded continuously, liquid tight. Duct size shall be based on a minimum air velocity of 1500 fpm and maximum of 2500 fpm. Duct shall be continuously welded, liquid tight, to hood duct collar as required by NFPA 96.

2.2.2 Hood Support

Wall mounted or island type hoods shall be supported from the structure with stainless steel mounting brackets provided with hoods. Hanger rods shall be 1/2 inch diameter stainless steel, threaded at the bottom and designed at the top to fit into inserts in building slats above or shall have hanger attachments fastened to structural steel members. Hanger rods shall be spaced 48 inches on center, maximum.

2.2.3 Integral Make-up Air System

Hood shall be provided with an integral make-up air system which automatically replaces the air volume that is exhausted by the hood. The make-up air system shall be in accordance with NFPA 96. Air supplied upstream of the hood suction opening does not qualify as make-up air. The exhaust air flow rate for ventilation of cooking equipment shall be drawn through the open area between cooking surfaces and the perimeter entrance of the hood. Make-up air shall be provided. The supply air plenum shall have a 1 inch thick foil-faced fiberglass insulation at the interior of the plenum.

2.2.4 Hood Lights and Wiring

Fixtures shall be U.L. Listed, recessed mounted, vapor proof fluorescent fixtures located along the full length of hood. The light fixtures shall be prewired to junction box on top of the hood. Regular or deluxe cool-white T-8 energy efficient fluorescent lamps shall be supplied. Hoods shall be factory prewired and shall have a single connection point. Hoods built in multiple sections shall be furnished with inter-connecting junction boxes for field connection of light fixtures.

2.2.5 Closure Panels

Vertical corner mullions, at removable closure panels, shall be 2 inch by 2 inch wide, 16 gauge stainless steel, and shall be welded integrally to the furring and head channel. Exhaust hood closure panels shall be 1/2 inch pan-formed, 18 gauge stainless steel. Upper edge of panels shall be

retained in 1 inch by 2 inch continuous 16 gauge stainless steel head channel secured to the hood superstructure. Lower edge of panels shall be mounted on perimeter furring cap, and shall be turned back 1 inch and flanged up 1 inch for "zee" clip retention.

2.2.6 Wall Panels

Double pan-formed wall panels shall be 18 gauge stainless steel, 1/2 inch thick with internal stiffener members. The panels shall be filled with a "USDA Approved" thermal insulation the full height and width of panels, and shall be attached to the interior with mastic. Maximum allowable temperature at rear side of panel shall be 120 degrees F. Lower edge and sides shall be leveled and squared. Panels shall have butt joints.

2.2.7 Hand Held Fire Extinguishers

Hand held fire extinguishers shall be located at each exhaust hood and shall be suitable for gas, electric, and grease fires.

2.2.8 Filter Type Hoods

Filter type hoods over cooking equipment shall be of canopy or noncanopy construction, UL listed, NSF approved, pre-engineered, and factory fabricated. Hoods shall be constructed of 18 gauge stainless steel. Internal hood joints, seams, filter support frames, and appendages attached inside the hood shall be sealed or otherwise made grease tight. Internal joints, seams, filter support frames and appendages shall be mechanically sound and sealed grease tight in accordance with the hood manufacturer's listing procedure and NFPA 96. Welded field joints inside the capture area and exposed to view shall be ground and polished to match the adjacent finish. UL listed full joints shall be provided per terms of the manufacturer's listing. Hoods shall be factory prewired and shall have a single connection point. Hoods built in multiple sections shall be furnished with junction boxes for field connection.

2.2.9 Grease Extracting Type Hoods

Grease extracting exhaust hoods shall be pre-engineered, factory fabricated and assembled with built-in washdown systems. Grease extracting exhaust hoods shall be of the size and type as indicated and shall be welded to the exhaust ductwork as required by NFPA 96. Hoods shall have a minimum grease extracting efficiency of 95 percent to be accomplished without the use of filters, cartridges or constant running water.

2.2.9.1 Construction

Construction shall be entirely of stainless steel. Grease extraction chamber and exhaust capture chamber shall be not less than 18 gauge stainless steel. Seams or joints that direct and capture grease laden vapors shall be continuously welded, with the weld ground and polished to match the adjacent finish where exposed. The vertical joint where the front outside face of the hood meets the end panel of the hood shall be continuously welded, with the weld ground and polished to match the adjacent finish. Joints, seams, and appendages shall be mechanically sound and sealed grease tight in accordance with the hood manufacturer's listing procedure and NFPA 96. Welded field joints inside the capture area and exposed to view shall be, ground and polished to match the adjacent finish. Hoods shall be factory preplumbed and prewired and shall have a single connection point. Grease extracting exhaust hoods shall be of the overhead

type suitable for wall mounting. Steel mounting brackets shall be provided by the manufacturer.

2.2.9.2 Internal Hood Fire Protection

Grease extracting hoods shall be furnished with piping and nozzles for a fire protection system providing protection of the exhaust hood system, exhaust duct system, grease filter, and the cooking equipment served by the exhaust hood, per NFPA 96. Exposed piping and fittings shall be chrome-plated or stainless steel sleeved. Each grease extracting hood control panel shall be provided with a manual pull fire switch to activate the automatic washdown system and exhaust fan. Each hood shall be equipped with a full length, stainless steel fire damper located at the air inlet. In the event that a fire or heat in excess of 286 degrees F in the exhaust duct collars exists, a thermal switch shall automatically close the fire damper, and turn off the exhaust and supply fans. Fire dampers shall be able to be open with a reset handle without the removal of access panels. Reset handle shall be located not greater than 7 feet above the finished floor. The controls for the hood fire protection system shall be equipped with switches to shut-off fuel-fired and electric-powered cooking equipment served by the hood, when the internal hood fire protection system is activated. The hood fire protection system shall be equipped with normally-open contacts for activating the building fire alarm system.

2.3 UTILITY DISTRIBUTION SYSTEMS

Utility distribution systems shall be UL listed and conform to NFPA 70. Systems shall be prewired and preplumbed to one final connection point. Systems shall include an electrical distribution assembly and a mechanical manifold assembly as indicated. Systems shall be provided with removable 16 gauge stainless steel panels for ease of access. Systems shall be provided with floor mounting pedestals with vertical extensions for overhead service connections.

2.3.1 Electrical Distribution Assembly

The internal electrical main feeder shall be copper busbar with the equipment ground connected to a grounding stud. Electrical assembly shall be prewired with easily removable and resettable stainless steel connection plates housing receptacle and circuit breaker. Each receptacle shall be of standard NEMA configuration and shall be positively grounded to both the receptacle connection plate and body of the enclosure. Each connection plate shall have identification plate giving voltage, amperage, phase, item number, and description of equipment connected to the receptacle. Electrical equipment shall be ground fault protected in accordance with NFPA 70. A main service disconnect shall be provided. Coded indicator lights shall be provided to indicate the status of power to each piece of equipment. Controls shall be mounted as shown by the manufacturer.

2.3.2 Mechanical Manifold Assembly

Mechanical manifold assembly shall be in accordance with Section 15400A PLUMBING, GENERAL PURPOSE and Section 15190A GAS PIPING SYSTEMS. An automatic fuel shut-off device shall be provided in the gas fuel manifold to automatically shut-off the gas supply to any piece of gas-burning equipment in the event of a fire. An automatic fuel shut-off device shall be provided for all cooking equipment served by a single exhaust hood and by adjoining exhaust hood systems. Activation of a shut-off device from one hood system or from adjoining exhaust systems shall not cause the shut

down of fuel-fired equipment served by another hood system. The automatic fuel shut-off device shall be the manual-reset type only. The fuel shut-off device shall be provided with a 5 second delay to eliminate instantaneous power outages. The automatic fuel shut-off and manual fuel shut-off valves shall be mounted at the gas inputs to the utility distribution system. The fuel shut-off device shall be in conformance with NFPA 96.

2.4 COOKING EQUIPMENT

Cooking equipment shall include commercial and residential grade ranges in main and satellite buildings.

2.4.1 Cojjercial Ranges

Ranges in main station kitchen shall be commercial grade, combined fuel type containing gas fired top units and electrically powered oven. Top of range shall bave 4 eyes and solid surface griddle as arranged as shown on the drawings. Oven shall be self-cleaning and equipped with light and timer control. All exterior surfaces except cooktop heated areas shall be stainless steel.

2.4.2 Residential Range

Range in satellite station kitchen shall be heavy duty residential type with electrically powered top and oven. Top shall have 4 eyes arranged in manufacturer's standard configuration of 2 large and 2 small eyes. Oven shall be self-cleaning and equipped with light and timer control. All exterior surfaces shall be stainless steel.

2.5 DISHWASHWASHERS

Under the counter type, 24 inches wide, operable at water pressures from 15 to 120 psi. Tub and door liner,front panel and lower access panel shall be stainless steel. Sealed detergent and automatic rinsing-aid dispensers in door liner. Rack system shall be PVC-coated sliding dish racks, with removable cutlery basket or top cutlery tray. Capacity shall be 14 place settings. Water consumption shall be 3.2 gallons.

2.5.1 Operation and Controls

Four wash cycles with hot-air and heat-off drying cycle options. Controls shall be either solid-state, electronic, press-to-start type or rotary-dial, turn-to-start type.

2.5.2 Standard Features

Standard features include the following: Waste food disposer, self-cleaning food-filter system, hot-water booster heater for 140 deg F wash water with incoming water at 100 deg F.

2.6 ELECTRICAL WORK

Electrical systems, components and accessories shall be certified to be in accordance with NFPA 70 and the following:

2.6.1 Installed Equipment Load

Should the electrical load of the approved equipment differ from that

specified or shown on the drawings, the contractor shall provide and install electrical service compatible with the approved equipment.

2.6.2 Electrical Equipment and Components

Food service equipment furnished under this section shall have loads, voltages, and phases compatible with building system, and shall conform to manufacturer standards.

2.6.3 Cords and Caps

Food service equipment cord/caps shall be coordinated with related receptacles. All 120/208/240 volt "plug-in" equipment shall have Type SO or SJO cord and a plug with ground, fastened to frame/body of item. Mobile equipment shall have a strain-relief assembly at the cord connection of the appliance. Mobile electrical support equipment (heated cabinets, dish carts, etc.) and counter appliances mounted on mobile stands (mixers, food cutter, toaster, coffee makers, microwave ovens, etc.) shall have cord/cap assembly with cord-hanger as provided by the manufacturer.

2.6.4 Switches and Controls

Each motor-driven appliance or electrically-heated unit shall be equipped with control switch and overload protection per UL 197 and UL 471. Switches, controls, control transformers, starters, equipment protection and enclosures shall be Industry standards for the equipment environment.

2.6.5 Motors

Motors at 120, 240, 208/240 and 460/480 volts shall have starter with overload protection and short circuit motor protection per manufacturer standards.

2.6.6 Heating Elements

Electrically-heated equipment shall have thermostatic controls. Water heating equipment shall be equipped with a positive low-water shut-off.

2.6.7 Receptacles and Switches

Receptacles which are located in vertical panels of closed base bodies shall be installed in 12 inch by 8-1/2 inch by 3 inch deep recessed mounting panel sloped on a 60-degree angle and turned up to the top of the opening. Receptacles which are located in closed base fixtures shall be prewired to a junction box located within 6 inches from the bottom of the utility compartment. Receptacles which are installed in/on fabricated equipment shall be horizontally-mounted in a metal box with a stainless steel cover plate.

2.6.8 Light Fixtures

Light fixtures with lamps which are installed in/on fabricated or field-assembled equipment shall be prewired to a junction box for final connection (fixtures shall be continuous run when indicated). Fluorescent display light shall be installed the full-length of the display stand and serving shelf with stud bolts or as indicated, and shall be prewired through a support post to a recess-mounted switch. Heat lamps shall be installed to underside of serving shelf assemblies as specified. Heat lamp length for chassis shall be sized per manufacturer or as indicated on the

drawings. Cold storage light fixtures shall be electrically connected through the hub fitting located on the top of the fixture. Horizontal conduit shall be above the ceiling panels. Plastic sleeves shall be installed through ceiling panels for electrical conduit and the penetrations shall be sealed airtight at both sides of panel.

2.6.9 Final Electrical Connection Provisions

Final electrical connection points of equipment shall be tagged with item number, name of devices on the circuit, total electrical load, voltage, and phase. Fabricated equipment containing electrically-operated components or fittings, indicated on utility connections drawings to be direct-connected, shall have each component, fitting, or group thereof prewired to a junction box for final connection. Refer to the drawings for circuit loading. Field-assembled equipment (example, prefabricated cold storage assemblies, conveyor systems, exhaust hoods) shall have electrical components completely interconnected by this section for final connection as indicated on utility connection drawing. The following groups of cold storage assembly electrical devices shall be prewired to a top-mounted junction box for final connection per compartment grouping, unless otherwise indicated.

a. Light fixtures, switches, and heated pressure-relief vent.

b. Door/jamb heater and temperature monitors/alarms.

c. Evaporator fans, defrost elements, freezer fan door switch, and drain line heaters.

2.6.10 Lamps

Food service equipment containing light fixtures shall have standard appliance type bulbs or energy efficient appliance type bulbs as indicated on the drawings. Exposed fluorescent lamps above or within a food zone shall have plastic coated T-8 energy efficient lamps or standard lamps, sleeved in plastic tube with end caps.

2.7 COLOR

Color shall be as indicated.

PART 3 EXECUTION

3.1 INSTALLATION

Equipment shall be installed at locations shown in accordance with NSF Product Listing and the manufacturer's written instructions. The Contractor shall make provision for the plumbing, heating, and electrical connections and for equipment indicated as being furnished and installed by the Government.

3.1.1 Equipment Connections

Equipment connections shall be complete for all utilities. Unless otherwise specified, exposed piping shall be stainless steel. Steam operating pressure shall be as indicated.

3.1.2 Backflow Preventers

Backflow preventers shall be furnished as specified in Section 15400A

PLUMBING, GENERAL PURPOSE. The Contractor is responsible to install backflow preventers as shown on the contract drawings and at all other locations necessary to preclude a cross-connect or interconnect between a potable water supply and any source of nonpotable water, or other contaminant. Backflow preventers shall be installed at all locations where the potable water outlet is below the flood level of the equipment, or will be located below the level of the contaminant. Backflow preventers shall be provided of sufficient size to allow unrestricted flow of water to the equipment, and preclude the backflow of waste or other contamination into the potable water system.

3.1.3 Gas Equipment

Installation of equipment shall conform to NFPA 54. A heavy duty steel cable, 3 inches to 6 inches shorter than the equipment connector shall be fastened to the equipment and the walls.

3.1.4 Plumbing Work

Plumbing final connection points of equipment shall be tagged, indicating item number, name of devices or components, and type of utility (water, gas, steam, drain). Extensions of indirect waste fitting shall be provided to open-sight hub drain, floor sink or floor drains from food service equipment.

3.2 CONSTRUCTION OF FABRICATED EQUIPMENT

3.2.1 Grinding, Polishing, and Finishing

Exposed welded joints shall be ground smooth and finished to match the adjoining material. Wherever materials have been depressed or sunken by welding operation, such depressions shall be hammered and peened flush with the adjoining surface, and again ground to eliminate high spots. Ground surfaces shall then be polished or buffed to match adjoining surfaces. Care shall be exercised in the grinding operations to avoid excessive heating of the metal and metal discoloration. Abrasives, wheels, and belts used in grinding shall be free of iron and shall not have been used on carbon steel. In all cases, the grain of rough grinding shall be removed by several successively finer polishing operations. The texture of the final polishing operation shall be uniform, smooth, and consistent. The grain direction of horizontal stainless steel surface shall be longitudinal, including the splash back. Polishing at right angle corners shall provide a mitered appearance. Butt and contact joints shall be close fitting and not require solder as a filler. Wherever brake bends occur, the bends shall be free of open texture or orange peel appearance. Where brake work does mar the uniform appearance of the material, such marks shall be removed by grinding, polishing, and finishing. Sheared edges shall be free of burrs, projections, and fins. Where miters or bullnosed corners occur, such miters and corners shall be finished with the underage of the material and ground to a uniform condition. Overlapping of material is not acceptable. Exposed stainless steel surfaces shall have a No. 3 or 4 finish. Finishes of materials, other than stainless steel, shall be comparable in appearance to commercial mill finish. Exposed surfaces shall include:

a. Exterior surfaces exposed to view.

b. Interior surfaces exposed to view in doorless cabinets.

c. Undersides of shelves shall have a ground finish of No. 90 grit or finer.

3.2.2 Fastening Devices

Fastening devices shall be of the same material as the metal being joined when joint pieces are of similar metal. Fastening devices shall be stainless steel when stainless steel is joined to dissimilar metal. Stud bolts shall be a minimum of 1/4-20 stainless steel with length necessary to accept washers, and required nuts, and shall be welded 9 inches on center maximum. Exposed surfaces of equipment shall be free of bolts, screws, and rivet heads. Stainless steel stud bolts shall be used to fasten tops of counters or tables to angle framing and trim to other surfaces. Such bolts shall be of the concealed type. Threads of stud bolts which are on the inside of fixtures and are either visible or might come in contact with a wiping cloth, shall be capped with chrome plated washers, lock washers, and chromium-plated brass cap nuts. Wherever bolts are welded to the underside of trim or tops, the reverse side of the welds shall be finished uniform with the adjoining surface of the trim or the top. Dimples at these points will not be acceptable.

3.2.3 Welding

3.2.3.1 Welding Rods

Welding shall be done with welding rods of the same composition as the sheets or parts welded.

3.2.3.2 Weld Quality

Welds shall be strong and ductile. Welds shall be free of imperfections such as pits, runs, spatter, cracks, low spots, voids, and shall be finished to have the same color as the adjoining surfaces. Butt welds made by welding straps under seams, or by filling in with solder, or by grinding will not be acceptable. Welded joints shall be homogeneous with the sheet metal. Spot welding shall not be substituted for continuous welding. Joints in tops of counters, tables, drainboards, exposed shelving, and sinks shall be joined by heli-arc welding or a process other than carbon-arc welding or one that will permit carbon pick-up. Joints shall be fully welded. Counter tops shall be factory welded into lengths as long as practical in order to reduce field welded joints to a minimum. Exposed welds shall be ground smooth, flush with adjacent surface and free of burrs and sharp edges. Wherever welds occur on nonfood contact surfaces not suitable for grinding or polishing, such welds and the accompanying discoloration shall be sandblasted and coated in the factory with a nontoxic metallic-base paint. Bolts and screws shall be welded by a process that will minimize the possibility of carbide precipitation. Welds in galvanized steel made after galvanizing, and the adjacent areas where galvanizing is damaged, shall be cleaned and coated with galvanizing repair compound.

3.2.4 Soldering

Soldering shall serve only as a filler to prevent leakage and shall be made with solder material. Stainless steel requiring soldering shall first be cleaned of discoloration and then have a soldering flux applied. Excess or remaining flux and catalytic material shall be removed after the soldering has been completed, and the entire soldered joint and adjacent metallic surfaces shall be cleaned with a liquid alkaline or neutralizing agent to

prevent any attack on the surrounding metallic surfaces by the soldering flux.

3.2.5 Brazing

Brazing shall be accomplished with brazing material. Brazing shall be used only on copper tubing to brass and bronze connection fittings.

3.3 TESTING

Equipment shall be inspected and tested under operating conditions after installation. If inspection or test shows defects, such defects shall be corrected, and inspection and test shall be repeated. Refrigerator tests shall include the following:

3.3.1 Performance Tests

A detail written test procedure shall be submitted prior to performance of tests. The Contractor shall furnish all instruments, test equipment, and personnel required for the tests; Government will furnish the necessary water and electricity for the installed equipment. Evidence shall be submitted that the instruments have been properly calibrated by an independent laboratory at the Contractor's expense.

3.3.2 Operating Tests

An operating test shall be performed on all items after complete installation and adjustment. The failed test item shall be corrected and the test shall be rerun.

3.3.3 Clean and Adjust

Debris resulting from this work, as the installation progresses, shall be removed from the jobsite. All food service equipment, prior to demonstration, shall be cleaned and polished, both interior/exterior. Drawer slides and casters shall be lubricated and adjusted. Pressure regulating valves, timed-delay relays, thermostatic controls, temperature sensors, and exhaust hood grilles shall be adjusted, as required, for proper operation. Faucet aerators and line strainers shall be cleaned or replaced. Damage to painted finishes shall be touched up.

3.3.4 Equipment Start-Up/Demonstration

The Contractor shall obtain the services of the manufacturer's representative experienced in the installation, adjustment and operation of the equipment specified. The representative shall supervise the start-up, adjustment, and testing of the equipment, prior to the demonstration. Equipment shall be carefully tested, adjusted, and regulated in accordance with the manufacturer's instructions and shall be so certified in writing. A thorough operational demonstration shall be provided of all equipment and instructions furnished for general and specific care and maintenance. Selected items of equipment and attendees shall be scheduled, with the Contracting Officer, at least 2 weeks in advance of demonstration periods.

-- End of Section --

SECTION TABLE OF CONTENTS

DIVISION 12 - FURNISHINGS

SECTION 12320A

CABINETS AND COUNTERTOPS

05/98

PART 1 GENERAL

1.1 REFERENCES
1.2 DESIGN
1.3 SUBMITTALS
1.4 DELIVERY AND STORAGE

PART 2 PRODUCTS

2.1 CABINETS
2.1.1 Frame Type Cabinets
2.1.2 Frameless Type Cabinets
2.2 COUNTERTOPS AND BACKSPLASH
2.2.1 High-Pressure Laminated Plastic Clad Countertops
2.3 FINISH
2.3.1 Cabinet Finish
2.3.2 Melamine Laminated Interior Cabinet Finish
2.4 HARDWARE
2.5 COLOR, TEXTURE, AND PATTERN

PART 3 EXECUTION

3.1 INSTALLATION
3.2 CLEANING

-- End of Section Table of Contents --

UFGS-12320A (May 1998)

SECTION 12320A

CABINETS AND COUNTERTOPS
05/98

PART 1 GENERAL

1.1 REFERENCES

The publications listed below form a part of this specification to the extent referenced. The publications are referred to in the text by basic designation only.

BUILDERS HARDWARE MANUFACTURERS ASSOCIATION (BHMA)

BHMA A156.9	(1994) Cabinet Hardware

KITCHEN CABINET MANUFACTURERS ASSOCIATION (KCMA)

KCMA A161.1	(1995) Performance & Construction Standards for Kitchen and Vanity Cabinets

NATIONAL ELECTRICAL MANUFACTURERS ASSOCIATION (NEMA)

NEMA LD 3	(1995) High-Pressure Decorative Laminates

1.2 DESIGN

Cabinets shall be wood, factory-fabricated and finished in the manufacturer's standard sizes and finishes of the type, design, and configuration indicated. Cabinets shall be constructed as specified and shall meet the requirements of KCMA A161.1. Wall and base cabinet assemblies shall consist of individual units joined into continuous sections. Fastenings shall be accomplished to permit removal and replacement of individual units without affecting the remainder of the installation. Counters shall be provided with watertight sink rim when indicated. Drawers shall be removable and shall be equipped with position stops to avoid accidental complete withdrawals. Shelves shall be fixed or adjustable as indicated. Adhesives shall meet local regulations regarding VOC emissions and off-gassing. As far as practical, adhesives with the lowest emission levels shall be chosen. At least 50 percent of wood and wood products shall utilize loclly harvested woods or wood from managed forests and the manufacturer shall so certify.

1.3 SUBMITTALS

Government approval is required for submittals with a "G" designation; submittals not having a "G" designation are for information only. When used, a designation following the "G" designation identifies the office that will review the submittal for the Government. The following shall be submitted in accordance with Section 01330 SUBMITTAL PROCEDURES:

SD-02 Shop Drawings

Installation

Drawings showing each type of cabinet and related item, and clearly indicating the complete plan, location, and elevations of the cabinets and accessories and pertinent details of construction, fabrication, and attachments.

SD-03 Product Data

Cabinets
Countertops and Backsplash

Manufacturer's printed data, catalog cuts, installation and cleaning instructions.

SD-04 Samples

Cabinets
Countertops and Backsplash

In lieu of individual samples, complete minimum size cabinets may be furnished as samples. Mock-up units are not acceptable. Samples shall be of sufficient size to show color, pattern, and method of assembly.

a. Countertop and backsplash - One section, containing both.

b. Door and drawer front - One of each, with hardware mounted.

c. Countertop color samples approximately 2 x 3 inches size.

d. Stain/color samples approximately 2 x 3 inches size.

SD-06 Test Reports

Cabinets and Countertops

Test reports certifying that all cabinets comply with the requirements of KCMA A161.1. Tests shall be conducted by independent laboratories approved by KCMA. KCMA certification seals affixed to the cabinets will be accepted in lieu of certified test reports.

1.4 DELIVERY AND STORAGE

Cabinets shall be delivered to the jobsite wrapped in a protective covering. Cabinets shall be stored in accordance with manufacturer's recommendations in an adequately ventilated, dry location that is free of dust, water, or other contaminants and in a manner to permit access for inspection and handling. Cabinets shall be handled carefully to prevent damage to the surfaces. Damaged items that cannot be restored to like-new condition shall be replaced.

PART 2 PRODUCTS

2.1 CABINETS

Bathroom cabinets in barracks shall be of the same construction and same outside appearance. Door design shall be solid flush face from vendors standard styles. Shelves shall be fixed. Shelves shall be minimum 1/2 inch thick plywood or minimum 1/2 inch thick 45 pound density particle board. Drawer fronts shall be 45 pound density particle board or hardwood plywood to match cabinet door construction.

2.1.1 Frame Type Cabinets

The cabinets shall be constructed with frame fronts and solid ends, or frame construction throughout. Frame members shall be 3/4 inch thick by 1-1/2 inch wide; kiln-dried hardwood, glued together, and shall be either mortised and tenoned, dovetailed or doweled, nailed, stapled or screwed. Top and bottom corners shall be braced with either hardwood blocks that are glued together with water resistant glue and nailed in place, or metal or plastic corner braces. Backs of wall cabinets shall be 1/8 inch thick plywood, tempered hardboard or 3/8 inch thick,45 pound density particle board. Backs of base and tall cabinets shall be 3/8 inch thick hardwood or 3/8 inch thick, 45 pound density particle board. Bottoms of cabinets shall be minimum 3/8 inch thick plywood 45 pound density particle board or sound grade plywood and shall be braced with wood members glued in place. Cabinet ends shall be 3/8 inch thick, 45 pound density particle board.

2.1.2 Frameless Type Cabinets

The cabinets shall be of frameless design and construction. Cabinets shall be constructed of minimum 5/8 inch thick, 45 pound density particle board end and floor panels. Cabinet back shall be constructed of minimum 3/16 inch thick, 45 pound density particle board. Hanging rails shall be doweled and glued to end panels, then fastened and hot melt glued to cabinet back. Toe kick plates shall be recessed, doweled and glued to the end panels. Top and bottom corners shall be braced with either hardwood blocks glued together with water resistant glue and nailed in place, or fastened with metal or plastic corner braces.

2.2 COUNTERTOPS AND BACKSPLASH

2.2.1 High-Pressure Laminated Plastic Clad Countertops

Clad countertop and backsplash shall be constructed of 3/4 inch thick plywood and shall be fully formed type. Fully formed type or square edge shall be a unit with shaped edges using wood nose molding at counter edge and shall include a separate backsplash. Backsplash shall be not less than 3-1/2 inches high. Edging and trim shall consist of plastic laminate cut and fitted to all exposed edges. End splashes constructed of 3/4 inch plywood or 3/4 inch thick, 45 pound density particle board core shall be supplied. Continuous sheets of longest lengths practicable shall be provided. Joints in surface sheeting shall be tight and flush and held to a practicable minimum. When the countertop and backsplash are two separate units, GP50 plastic laminate shall be used. When the countertop and backsplash are one unit, PF42 plastic laminate shall be used. Plastic laminate shall conform to the requirements of NEMA LD 3 and plastic laminate adhesive shall be contact type applied to both surfaces. For fully formed and cove type countertops, the post-forming plastic laminate shall not be bent to a radius smaller than the limit recommended by the

plastic manufacturer.

2.3 FINISH

2.3.1 Cabinet Finish

Cabinets shall be provided with a factory-applied durable finish in accordance with KCMA A161.1 requirements and of a type standard with the manufacturer. Natural finish wood doors, drawer fronts, cabinet fronts, and exposed cabinet sides shall be fabricated of wood which will be free of extreme color variations within each panel or between adjacent panels. Exposed exterior surfaces shall be melamine plastic finish.

2.3.2 Melamine Laminated Interior Cabinet Finish

Plywood, particle board or tempered hardboard cabinet backs shall be finished with a melamine laminate on the exposed side. Particle board shelves shall be covered on both sides with a laminated melamine finish. Melamine laminate shall conform to the requirements of NEMA LD 3 and laminate adhesive shall be contact type applied to both surfaces.

2.4 HARDWARE

Hardware shall conform to BHMA A156.9, shall be suitable for kitchen cabinet use, and shall include all miscellaneous hardware for a complete installation. Door hinges shall be self-closing type. Drawer runners shall have nylon rollers standard with the manufacturer. Hardware and fastenings for doors and drawers with particle board cores shall be of the through-bolt type. The types and finishes of hardware shall be as selected.

2.5 COLOR, TEXTURE, AND PATTERN

Design, color, and finish shall be as indicated.

PART 3 EXECUTION

3.1 INSTALLATION

Cabinets shall be installed level, plumb, and true to line, and shall be attached to the walls or floors with suitable devices to securely anchor each unit. Countertops, accessories, and hardware shall be installed as indicated on the drawings. Installation shall be in accordance with the manufacturer's approved printed instructions. Closer and filler strips and finish moldings shall be provided as required. Prior to final acceptance, doors shall be aligned, and hardware shall be adjusted.

3.2 CLEANING

Cabinet and countertop surfaces shall be cleaned in accordance with manufacturer's instructions.

-- End of Section --

SECTION TABLE OF CONTENTS

DIVISION 12 - FURNISHINGS

SECTION 12490A

WINDOW TREATMENT

01/98

PART 1 WORK DESCRIPTION

1.1 REFERENCES
1.2 SUBMITTALS
1.3 GENERAL
1.4 DELIVERY, STORAGE, AND HANDLING
1.5 FIELD MEASUREMENTS
1.6 WARRANTY

PART 2 PRODUCTS

2.1 WINDOW BLINDS
2.1.1 Horizontal Blinds
2.1.1.1 Head Channel and Slats
2.1.1.2 Controls
2.1.1.3 Intermediate Brackets
2.1.1.4 Hold-Down Brackets
2.2 COLOR

PART 3 EXECUTION

3.1 WINDOW TREATMENT PLACEMENT SCHEDULE
3.2 INSTALLATION

-- End of Section Table of Contents --

UFGS-12490A (January 1998)

SECTION 12490A

WINDOW TREATMENT
01/98

PART 1 WORK DESCRIPTION

1.1 REFERENCES

The publications listed below form a part of this specification to the extent referenced. The publications are referred to in the text by basic designation only.

U.S. GENERAL SERVICES ADMINISTRATION (GSA)

FS AA-V-00200 (Rev B) Venetian Blinds

1.2 SUBMITTALS

Government approval is required for submittals with a "G" designation; submittals not having a "G" designation are for information only. When used, a designation following the "G" designation identifies the office that will review the submittal for the Government. The following shall be submitted in accordance with Section 01330 SUBMITTAL PROCEDURES:

SD-02 Shop Drawings

Approved Detail Drawings

Drawings showing fabrication and installation details. Drawings shall show layout and locations of track, direction of draw, mounting heights, and details.

SD-03 Product Data

Window Treatments
Hardware

Manufacturer's data composed of catalog cuts, brochures, product information, and maintenance instructions.

SD-04 Samples

Window Treatments

Three samples of each type and color of window treatment. Blind slats or louvers shall be 6 inches in length for each color. Track shall be 6 inches in length. Shade material shall be minimum 6 x 6 inches in size.

1.3 GENERAL

Window treatment shall be provided, complete with necessary brackets, fittings, and hardware. Each window treatment type shall be a complete

unit provided in accordance with paragraph WINDOW TREATMENT PLACEMENT SCHEDULE. Equipment shall be mounted and operated as indicated. Windows to receive a treatment shall be completely covered. The Contractor shall take measurements at the building and shall be responsible for the proper fitting and hanging of the equipment.

1.4 DELIVERY, STORAGE, AND HANDLING

Components shall be delivered to the jobsite in the manufacturer's original packaging with the brand or company name, item identification, and project reference clearly marked. Components shall be stored in a dry location that is adequately ventilated and free from dust, water, or other contaminants and shall have easy access for inspection and handling. Materials shall be stored flat in a clean dry area with temperature maintained above 50 degrees F.

1.5 FIELD MEASUREMENTS

The Contractor shall become familiar with details of the work, verify dimensions in the field, and shall advise the Contracting Officer of any discrepancy before performing the work.

1.6 WARRANTY

Manufacturer's standard performance guarantees or warranties that extend beyond a 1 year period shall be provided.

PART 2 PRODUCTS

2.1 WINDOW BLINDS

Each blind, including hardware, accessory items, mounting brackets and fastenings, shall be provided as a complete unit produced by one manufacturer. All parts shall be one color unless otherwise shown, and match the color of the blind slat. Steel features shall be treated for corrosion resistance.

2.1.1 Horizontal Blinds

Horizontal blinds shall conform to FS AA-V-00200, Type II (1 inch slats), except as modified below. Blind units shall be capable of nominally 180 degree partial tilting operation and full-height raising. Blinds shall be inside mount as shown. Tapes for Type I slats shall be longitudinal reinforced vinyl plastic in 1-piece turn ladder construction.

2.1.1.1 Head Channel and Slats

Head channel shall be steel nominal 0.024 for Type II. Slats shall be aluminum, not less than 0.008 inch thick, and of sufficient strength to prevent sag or bow in the finished blind. A sufficient amount of slats shall be provided to assure proper control, uniform spacing, and adequate overlap.

2.1.1.2 Controls

The slats shall be tilted by a transparent tilting wand, hung vertically by its own weight, and shall swivel for easy operation. The tilter control shall be of enclosed construction. Moving parts and mechanical drive shall be made of compatible materials which do not require lubrication during

normal expected life. The tilter shall tilt the slats to any desired angle and hold them at that angle so that any vibration or movement of ladders and slats will not drive the tilter and change the angle of slats. A mechanism shall be included to prevent over tightening. The wand shall be of sufficient length to reach to within 5 feet of the floor.

2.1.1.3 Intermediate Brackets

Intermediate brackets shall be provided for installation of blinds over 60 inches wide and shall be installed as recommended by the manufacturer.

2.1.1.4 Hold-Down Brackets

Universal type hold-down brackets for sill or jamb mount shall be provided at classroom windows in BHQ..

2.2 COLOR

Color shall be as indicated on the drawings.

PART 3 EXECUTION

3.1 WINDOW TREATMENT PLACEMENT SCHEDULE

Window covering shall be provided as indicated on the drawings.

3.2 INSTALLATION

Installation shall be in accordance with the approved detail drawings and manufacturer's installation instructions. Units shall be level, plumb, secure, and at proper height and location relative to window units. The Contractor shall furnish and install supplementary or miscellaneous items in total, including clips, brackets, or anchorages incidental to or necessary for a sound, secure, and complete installation. Installation shall not be initiated until completion of room painting and finishing operations. Upon completion of the installation, window treatments shall be adjusted for form and appearance, shall be in proper operating condition, and shall be free from damage or blemishes. Damaged units shall be repaired or replaced by the Contractor as directed by the Contracting Officer.

-- End of Section --

SECTION TABLE OF CONTENTS

DIVISION 12 - FURNISHINGS

SECTION 12600A

THEATER CHAIRS

03/03

PART 1 GENERAL

1.1 REFERENCES
1.2 SUBMITTALS
1.3 DELIVERY AND STORAGE
1.4 WARRANTY

PART 2 PRODUCTS

2.1 MATERIALS
2.1.1 Woven Fabric Upholstery
2.1.2 Polyurethane Foam
2.1.3 Plywood
2.1.4 Molded Plastic
2.1.5 Armrests
2.1.6 Tablet Arm
2.2 CHAIRS
2.2.1 Chair Backs
2.2.1.1 Plastic Panels
2.2.1.2 Wood Front Panels
2.2.1.3 Foam Padding
2.2.2 Seats
2.2.2.1 Steel Seat Units
2.2.3 Hinges
2.2.4 Standards
2.2.4.1 Floor Standards
2.2.4.2 Aisle and End Standards
2.3 FINISH
2.4 COLOR

PART 3 EXECUTION

3.1 SEATING SYSTEM
3.2 INSTALLATION

-- End of Section Table of Contents --

UFGS-12600A (March 2003)

SECTION 12600A

THEATER CHAIRS
03/03

PART 1 GENERAL

1.1 REFERENCES

The publications listed below form a part of this specification to the extent referenced. The publications are referred to in the text by basic designation only.

AMERICAN SOCIETY FOR TESTING AND MATERIALS (ASTM)

ASTM D 3597	(2002) Woven Upholstery Fabrics-Plain, Tufted, or Flocked

HARDWOOD PLYWOOD % VENEER ASSOCIATION (HPVA)

HPVA HP-1	(2000) Interim Voluntary Standard for Hardwood and Decorative Plywood

1.2 SUBMITTALS

Government approval is required for submittals with a "G" designation; submittals not having a "G" designation are for information only. When used, a designation following the "G" designation identifies the office that will review the submittal for the Government. The following shall be submitted in accordance with Section 01330 SUBMITTAL PROCEDURES:

SD-02 Shop Drawings

Installation; G, RO

Drawings indicating metal thickness, fastenings, details of hinge mechanism, seat and back dimensions, proposed finish, and including seating plans showing row spacing, row lengths, the varying lateral spacing at backs and seats, back pitch, and chair widths for the various section lengths, floor pitch, and riser height, where applicable.

SD-03 Product Data

Theater Chairs; G, AE

Manufacturer's descriptive data, catalog cuts, and installation instructions.

SD-04 Samples

Theater Chairs; G, AE

Samples of upholstery, laminate, paint, and plastic finish

materials and one complete chair. Fabric samples shall be of sufficient size to show color range, pattern, and finish. Chair sample may be incorporated into the installation, provided it is identified and the location noted.

1.3 DELIVERY AND STORAGE

Theater chairs shall be delivered to the site in unopened containers clearly labeled with the manufacturer's name and container contents. Materials shall be stored in a safe, dry, and clean location. Handling of items shall be in a manner that will protect the materials from damage.

1.4 WARRANTY

Manufacturer's standard performance guarantees or warranties that extend beyond a one year period shall be provided.

PART 2 PRODUCTS

2.1 MATERIALS

2.1.1 Woven Fabric Upholstery

Woven fabric shall conform to ASTM D 3597, except that it shall be and as indicated by reference on drawings to specific product (F-1). Fabric shall be treated to resist staining and soiling. Color and pattern shall be as scheduled.

2.1.2 Polyurethane Foam

Polyurethane foam shall be high density, fire retardant, nonhardening and nonoxidizing and shall have a high resistance to alkalies, oils, grease, soaps, abrasions, moisture, mildew, and tearing.

2.1.3 Plywood

Plywood shall conform to HPVA HP-1. Unexposed veneers shall be sound grade hardwood or Grade A fir. All face veneers shall be not more than 1/16 inch in thickness, of clear stock, and free from imperfections.

2.1.4 Molded Plastic

Molded plastic shall be high density with a minimum tensile strength of 3300 psi. Material shall be capable of withstanding outdoor temperatures ranging from plus 175 degrees to minus 50 degrees F. Pigments used shall be of such quality to eliminate painting plastic parts. Component surfaces shall have a textured finish.

2.1.5 Armrests

Armrests shall be solid plastic of manufacturer's standard configuration, black in color.

2.1.6 Tablet Arm

Each chair shall be equipped with a fold-away tablet arm assembly. Tablet arm shall be fabricated of manufacturer's standard core material faced with plastic laminate. Color shall be as indicated. All edges shall be rounded, either resilient edging or rounded wood molding, as standard with

the manufacturer. When in a writing position, the arm shall lock firmly in place so that it cannot be accidentally disengaged. A spring actuated device shall automatically lock the folded tablet arm in position beside the seat.

2.2 CHAIRS

Chair components and assembly shall be free from objectionable projections or irregularities. Corners and edges shall be smooth and rounded. Bolts, nuts, and other fastenings shall be capped. Steel shall be well-formed to shape and size required. Jointing of members shall be welded, riveted, or interlocked. Exposed welds shall be ground and dressed smooth. Casting shall be fine textured, sound, and free of pits, blow holes, and fins. Lines shall be true, accurate, and true-to-pattern with excess metal or imperfections removed. Fastening shall be concealed where possible.

2.2.1 Chair Backs

Back assembly shall consist of an exposed plastic rear panel with an upholstered steel or plywood front panel. Back assembly length shall be between 20 and 27-1/2 inches for a total height of 29 to 38 inches above the floor measured parallel to the back. Rear panel shall completely conceal and protect the rest of the seat assembly when in the raised position. Back shall be fixed type.

2.2.1.1 Plastic Panels

Plastic rear panels shall be one-piece injection molded plastic or high pressure laminated plastic adhered to hardboard or plywood. Texture of plastic panels shall be as selected. Color shall be black.

2.2.1.2 Wood Front Panels

Plywood upholstered front panels shall be fabricated from cross-banded plywood of not less than 3 ply, 3/8 inch thick hardwood veneers.

2.2.1.3 Foam Padding

Polyurethane foam shall be high density, fire retardant and shall be not less than approximately 2 inches in thickness and shall be securely attached to the steel or plywood panel and completely covered with the approved upholstery material.

2.2.2 Seats

Foundation for upholstered seats shall be formed of not less than 20 gauge steel with molded plastic cover or solid molded plastic. The seat foundation shall be free from visible screws, bolts, open holes, and projections on the bottom, front, and sides. The upholstered seat unit shall be easily removable without removing the foundation unit; and the covering shall be fastened to the frame in a manner that will permit easy reupholstering. Minimum width of seat shall be 18 inches.

2.2.2.1 Steel Seat Units

Upholstered steel seat unit shall be coil-spring type construction or nonsag spring-type construction. Springs shall be attached to a die-formed steel framework. Coil-spring units shall contain no less than 16 coil springs. Springs shall be connected in both directions to control spring

axial depression. Nonsag spring units shall contain at least five serpentine design springs suspended under tension; cross bracing, if required, shall be welded to frame so as not to interfere with spring action. Cushions shall be polyurethane foam cemented to burlap sheeting; shall have a minimum thickness of 1-3/4 inches throughout for coil-spring type construction, and 3 inches at front edge, 1-3/4 inches at rear edge, and 1 inch throughout the other portions for nonsag spring units. Panel side covers shall be made without welts. Top and front cover shall have size boxing of fabric upholstery material.

2.2.3 Hinges

Hinges shall be a counterweight mechanism using gravity to return to the upright position or of the full compensating type, completely enclosed, totally independent, free and easy in operation, and capable of compensating for circular installation, variation in installation conditions, and unevenness of floors. Hinge mechanism shall be of the push-back type to allow additional aisle space while in an open position. Each hinge shall have a noiseless, self-rising seat device, shall rise automatically to a uniform safety position of 3/4 fold at all times, and shall fold 100 percent when additional pressure is applied, to provide additional clearance. The hinges shall have oil-impregnated, self-lubricating, metal or brass alloy bearings that will not require further lubrication, or nylon bushings. Hinges shall have a spring tension adjustment mechanism to allow manual compensation for normal wear and fatigue.

2.2.4 Standards

2.2.4.1 Floor Standards

Floor standards shall be tublar steel or sheet steel. The standards shall be formed to fit the floor incline so that the standards will be vertical and the hinge point will be at a height that will maintain proper relation of seat to floor. The feet shall be formed to eliminate tripping hazards and shall have holes for bolt attachment to the floor.

2.2.4.2 Aisle and End Standards

Aisle or end standard panels shall be of the design indicated and shall have decorator panels of laminated plastic. Middle standards shall be designed to match basic aisle or end standard configuration.

2.3 FINISH

Metal surfaces shall be given the manufacturer's standard finishes.

2.4 COLOR

Color shall be as indicated.

PART 3 EXECUTION

3.1 SEATING SYSTEM

The system shall permit the standards to be installed on radial lines from a common center for which concentric circles are determined with each row of units utilizing common middle standards. Standards in each row shall be placed laterally so the aisle-end standards will be in alignment as

indicated on seating layout drawing. The angle of inclination of backs shall be adjusted for variations in sightlines. Mechanical attachment of components shall be of sufficient flexibility so that when permanently assembled they will compensate for the changing dimensions laterally between standards caused by convergence toward the center. Seat and back attachments shall absorb inaccuracies in lateral spacing of standards at point of attachment caused by unevenness of floor. Varying lateral dimensions of backs and seats shall be in accordance with approved seating layout. Minimum width of seating unit shall be 20 inches and may be used only to complete a specific row dimension.

3.2 INSTALLATION

Installation of theater chairs shall be in accordance with the seating drawings and approved installation instructions.

-- End of Section --

SECTION TABLE OF CONTENTS

DIVISION 13 - SPECIAL CONSTRUCTION

SECTION 13038

SAUNAS

04/02

PART 1 GENERAL

1.1 REFERENCES
1.2 SUBMITTALS
1.3 QUALITY ASSURANCE
1.3.1 Safety Glass
1.3.2 Electrical Components, Devices, and Accessories
1.3.3 Preinstallation Conference
1.4 PROJECT CONDITIONS
1.5 WARRANTY

PART 2 PRODUCTS

2.1 MATERIALS
2.1.1 Lumber
2.1.2 Softwood Plywood
2.1.3 Hardwood Plywood
2.1.4 Float Glass
2.1.5 Tempered Float Glass
2.1.6 Insulating Glass
2.1.7 Fasteners
2.2 SAUNAS
2.2.1 Precut Sauna
2.2.2 Interior Wall and Ceiling Paneling
2.2.3 Flooring
2.2.4 Wood Flooring
2.2.5 Stile-and-Rail Door
2.2.5.1 Door Wood Species
2.2.5.2 Jamb, Casing, and Threshold Wood Species
2.2.5.3 Glass Vision Panel
2.2.6 Door Hardware
2.2.6.1 Hinges
2.2.6.2 Pulls
2.2.7 Benches
2.2.8 Base, Corner, and Cove Trim
2.3 HEATERS AND CONTROLS
2.3.1 Sauna Heater
2.3.1.1 Capacity
2.3.1.2 Power Supply
2.3.1.3 Mounting
2.3.1.4 Controls
2.3.2 Remote Mechanical Controls
2.4 ACCESSORIES
2.5 LIGHTING
2.6 FABRICATION

PART 3 EXECUTION

3.1 INSTALLATION
3.2 DEMONSTRATION

-- End of Section Table of Contents --

MSPC-13038 (April 2002)

SECTION 13038

SAUNAS
04/02

PART 1 GENERAL

1.1 REFERENCES

The publications listed below form a part of this specification to the extent referenced. The publications are referred to within the text by the basic designation only.

AMERICAN NATIONAL STANDARDS INSTITUTE (ANSI)

ANSI Z97.1	(1984; R 1994) Safety Performance Specifications and Methods of Test for Safety Glazing Materials Used in Buildings

AMERICAN SOCIETY FOR TESTING AND MATERIALS (ASTM)

ASTM C 1036	(1991; R 1997) Flat Glass
ASTM C 1048	(1997b) Heat-Treated Flat Glass - Kind HS, Kind FT Coated and Uncoated Glass
ASTM E 774	(1997) Classification of the Durability of Sealed Insulating Glass Units

HARDWOOD PLYWOOD & VENEER ASSOCIATION (HPVA)

HPVA HP-1	(1994) Hardwood and Decorative Plywood

NATIONAL FIRE PROTECTION ASSOCIATION (NFPA)

NFPA 70	(2002) National Electrical Code

U.S. NATIONAL ARCHIVES AND RECORDS ADMINISTRATION (NARA)

16 CFR 1201	Safety Standard for Architectural Glazing Materials

U.S. DEPARTMENT OF COMMERCE (DOC)

DOC PS-1	(1995) Construction and Industrial Plywood
DOC PS-20	(1970; R 1986) American Softwood Lumber Standard

1.2 SUBMITTALS

Government approval is required for submittals with a "G" designation;

submittals not having a "G" designation are for information only or as otherwise designated. When used, a designation following the "G" designation identifies the office that will review the submittal for the Government. The following shall be submitted in accordance with Section 01330 SUBMITTAL PROCEDURES:

SD-02 Shop Drawings

Saunas; G, AE

Include plans, elevations, sections, details, wiring diagrams, and attachments to other Work. Detail heater assemblies and indicate dimensions, weights, loads, required clearances, method of field assembly, components, and location and size of each field connection.

SD-03 Product Data

Saunas; G, AE

Include construction details, material descriptions, dimensions of individual components and profiles, rated capacities, and accessories for each type of sauna indicated.

SD-04 Samples

Saunas; G, AE

For each exposed wood member, full board width by 12 inches long.

SD-10 Operation and Maintenance Data

Sauna heaters

Six complete copies of the heater manufacturer's service manual, not later than 3 months prior to the date of beneficial occupancy, with data for heaters

1.3 QUALITY ASSURANCE

1.3.1 Safety Glass

Category I and II materials complying with testing requirements in 16 CFR 1201 and in ANSI Z97.1.

1.3.2 Electrical Components, Devices, and Accessories

Listed and labeled as defined in NFPA 70, Article 100, by a testing agency acceptable to authorities having jurisdiction, and marked for intended use.

1.3.3 Preinstallation Conference

Conduct conference at Project site.

1.4 PROJECT CONDITIONS

Environmental Limitations: Do not deliver or install saunas until building is enclosed, wet work is complete, and HVAC system is operating and maintaining temperature and relative humidity at occupancy levels during

the remainder of the construction period.

1.5 WARRANTY

Special Warranty: Manufacturer's standard form in which manufacturer agrees to repair or replace components of sauna heaters that fail in materials or workmanship within five years from date of Substantial Completion.

PART 2 PRODUCTS

2.1 MATERIALS

2.1.1 Lumber

DOC PS-20, Western Red Cedar; WCLIB or WWPA; Clear Heart, unless otherwise indicated.

2.1.2 Softwood Plywood

DOC PS-1.

2.1.3 Hardwood Plywood

HPVA HP-1.

2.1.4 Float Glass

ASTM C 1036, Type I transparent glass, flat, Quality q3 glazing select, Class 1 clear.

2.1.5 Tempered Float Glass

ASTM C 1048, Kind FT fully tempered, Condition A uncoated, Type I transparent glass, flat, Quality q3 glazing select, Class 1 clear.

2.1.6 Insulating Glass

Preassembled units consisting of sealed lites of glass separated by a dehydrated interspace, and complying with ASTM E 774 for Class CBA units.

2.1.7 Fasteners

Stainless steel or hot-dip galvanized.

2.2 SAUNAS

2.2.1 Precut Sauna

Manufacturer's standard precut components, complete with exterior and interior finishes, foil vapor retarder installed on interior side of sauna, prehung door, and trim; designed for installation over existing framing.

2.2.2 Interior Wall and Ceiling Paneling

1-by-4-inch-nominal, V-joint, tongue-and-groove western red cedar boards of grade indicated; sanded smooth; kiln-dried to no more than 12 percent moisture content.

2.2.3 Flooring

Ceramic tile, specified in Section 09310, CERAMIC TILE. with removable wood flooring on top of tile floor.

2.2.4 Wood Flooring

Flooring: Manufacturer's standard removable, 1-by-4-inch-nominal wood duckboards, of same species as interior paneling, spaced not more than 1/2 inch apart and mounted on preservative-treated wood sleepers.

2.2.5 Stile-and-Rail Door

Manufacturer's standard prehung door with glass vision panel as follows:

2.2.5.1 Door Wood Species

Western red cedar.

2.2.5.2 Jamb, Casing, and Threshold Wood Species

Western red cedar.

2.2.5.3 Glass Vision Panel

Insulating-glass unit made from two lites of 1/8-inch-thick, clear, tempered glass with 1/4-inch airspace.

2.2.6 Door Hardware

2.2.6.1 Hinges

One and one-half pairs of brass butt hinges, one ball catch.

2.2.6.2 Pulls

Two wood door pulls of same wood species as interior paneling for each door.

2.2.7 Benches

Fabricate from S4S, 2-by-2-inch-nominal wood boards, spaced not more than 1/2 inch apart and supported by 2-by-4-inch nominal wood framing; of same wood species as interior paneling.

2.2.8 Base, Corner, and Cove Trim

Same wood species as interior paneling.

2.3 HEATERS AND CONTROLS

2.3.1 Sauna Heater

Manufacturer's standard electric convection unit with stainless-steel elements, stainless-steel interior, stainless-steel exterior, and wire protective top grill. Provide heat-tested, shatter-resistant igneous rocks that are in direct contact with and completely cover heating-unit coils.

2.3.1.1 Capacity

Determined by manufacturer for sauna size indicated.

2.3.1.2 Power Supply

As indicated on the drawings.

2.3.1.3 Mounting

Wall mounted with bracket.

2.3.1.4 Controls

Remote mechanical type, with contactor if necessary.

2.3.2 Remote Mechanical Controls

Manufacturer's standard system designed for surface wall mounting, with thermostat and the following features:

a. Heater switch.
b. Light switch.
c. Heat-indicator light.
d. Adjustable temperature control.
e. Dial timer that automatically shuts off heater after 60 minutes.
f. Dial time-delay that allows heater to be preset up to 24 hours in advance, with manual override.

2.4 ACCESSORIES

Provide the following accessories for each sauna, of same wood species as interior paneling, unless otherwise indicated:

a. Wood guardrail for heater, of dimensions required by listing.
b. Wood-slat backrest for each bench.
c. Sloping wood-slat headrest.
d. Combination thermometer/hygrometer, 127-mm diameter, with chrome casing.
e. Wall-mounted light fixture, rated for damp locations; brushed satin aluminum with white glass globe.
f. Wood bucket, 4-L capacity, with stainless-steel liner and wood ladle.
g. Wood clothes hanger with four pegs.
h. Wood-handled body brush with natural bristles.

2.5 LIGHTING

Manufacturer's standard incandescent lighting package inclusing fixtures, switches, conduit, wiring and accessories necessary for a complete and functioning system.

2.6 FABRICATION

Sand boards smooth and ease edges to a radius of not less than 1/16 inch.

Shop cut openings, to maximum extent possible, to receive hardware, electrical work, vents, and similar items. Locate openings accurately and use templates or roughing-in diagrams to produce accurately sized and

shaped openings. Sand edges of cutouts to remove splinters and burrs.

Nail or screw and glue bench components together from bottom side. Countersink fasteners.

Secure glass in wood frames with removable stops.

Flush mount junction boxes for heater, control panel, and light fixtures, with concealed connecting electrical conduit, in modular sauna panels.

PART 3 EXECUTION

3.1 INSTALLATION

Examine roughing-in for electrical systems to verify actual locations of electrical connections before heater installation.

Condition paneling to average prevailing humidity conditions in installation areas before installation.

Install sauna components level, plumb, true, and straight with no distortions to tolerances indicated. Shim, as required, with concealed shims. Install level and plumb to a tolerance of 1/8 inch in 96 inche . Install with no more than 1/16 inch in 96 inches vertical cup or bow and 1/8 inch in 96 inches horizontal variation from a true plane.

Install interior paneling horizontally for precut saunas and anchor to supporting substrate with blind nailing through tongue and groove. Do not use face fastening unless covered by trim. Install with fewest joints possible, using full-length pieces from maximum length of lumber available to greatest extent possible.

Adjust sauna door to close and latch properly.

3.2 DEMONSTRATION

Engage a factory-authorized service representative to train Government's maintenance personnel to adjust, operate, and maintain sauna heaters and controls

-- End of Section --

SECTION TABLE OF CONTENTS

DIVISION 13 - SPECIAL CONSTRUCTION

SECTION 13080

SEISMIC PROTECTION FOR MISCELLANEOUS EQUIPMENT

04/99

PART 1 GENERAL

1.1 REFERENCES
1.2 SYSTEM DESCRIPTION
1.2.1 General Requirements
1.2.2 Miscellaneous Equipment and Systems
1.3 SUBMITTALS
1.4 EQUIPMENT REQUIREMENTS
1.4.1 Rigidly Mounted Equipment

PART 2 PRODUCTS

2.1 BOLTS AND NUTS
2.2 SWAY BRACING

PART 3 EXECUTION

3.1 BRACING
3.2 BUILDING DRIFT
3.3 ANCHOR BOLTS
3.3.1 Cast-In-Place
3.3.2 Expansion or Chemically Bonded Anchors
3.4 RESILIENT VIBRATION ISOLATION DEVICES
3.4.1 Resilient and Spring-Type Vibration Devices
3.4.2 Multidirectional Seismic Snubbers
3.5 SWAY BRACES FOR PIPING
3.5.1 Longitudinal Sway Bracing
3.5.2 Anchor Rods, Angles, and Bars
3.5.3 Maximum Length for Anchor Braces
3.5.4 Bolts
3.6 EQUIPMENT SWAY BRACING
3.6.1 Suspended Equipment and Light Fixtures
3.6.2 Floor or Pad Mounted Equipment
3.6.2.1 Shear Resistance
3.6.2.2 Overturning Resistance

-- End of Section Table of Contents --

SECTION 13080

SEISMIC PROTECTION FOR MISCELLANEOUS EQUIPMENT
04/99

PART 1 GENERAL

1.1 REFERENCES

The publications listed below form a part of this specification to the extent referenced. The publications are referred to in the text by basic designation only.

AMERICAN SOCIETY FOR TESTING AND MATERIALS (ASTM)

ASTM A 36/A 36M	(1997a) Carbon Structural Steel
ASTM A 53	(1999) Pipe, Steel, Black and Hot-Dipped, Zinc-Coated, Welded and Seamless
ASTM A 153/A 153M	(1998) Zinc Coating (Hot-Dip) on Iron and Steel Hardware
ASTM A 307	(1997) Carbon Steel Bolts and Studs, 60,000 PSI Tensile Strength
ASTM A 500	(1999) Cold-Formed Welded and Seamless Carbon Steel Structural Tubing in Rounds and Shapes
ASTM A 563	(1997) Carbon and Alloy Steel Nuts
ASTM A 572/A 572M	(1999) High-Strength Low-Alloy Columbium-Vanadium Structural Steel
ASTM A 603	(1998) Zinc-Coated Steel Structural Wire Rope
ASTM A 653/A 653M	(1999) Steel Sheet, Zinc-Coated (Galvanized) or Zinc-Iron Alloy-Coated (Galvannealed) by the Hot-Dip Process
ASTM E 488	(1996) Strength of Anchors in Concrete and Masonry Elements

ASME INTERNATIONAL (ASME)

ASME B18.2.1	(1996) Square and Hex Bolts and Screws (Inch Series)
ASME B18.2.2	(1987; R 1999) Square and Hex Nuts (Inch Series)

U.S. ARMY CORPS OF ENGINEERS (USACE)

TI 809-04	(1998) Seismic Design for Buildings

1.2 SYSTEM DESCRIPTION

1.2.1 General Requirements

The requirements for seismic protection measures described in this section shall be applied to the mechanical equipment and systems outlined in Section 15070A SEISMIC PROTECTION FOR MECHANICAL EQUIPMENT, the electrical equipment and systems outlined in Section 16070A SEISMIC PROTECTION FOR ELECTRICAL EQUIPMENT, and the miscellaneous equipment and systems listed below. Seismic protection requirements shall be in accordance with TI 809-04 and additional data furnished by the Contracting Officer, and shall be provided in addition to any other requirements called for in other sections of these specifications. The design for seismic protection shall be based on a Seismic Use Group I building occupancy and on site response coefficients for S_{MS} = 0.17 and S_{M1} = 0.09. Resistance to lateral forces induced by earthquakes shall be accomplished without consideration of friction resulting from gravity loads. The basic force formulas, for Ground Motions A and B in Chapter 3 of TI 809-04, use the design spectral response acceleration parameters for the performance objective of the building, not for equipment in the building; therefore, corresponding adjustments to the formulas shall be required.

1.2.2 Miscellaneous Equipment and Systems

The bracing for the following miscellaneous equipment and systems shall be developed by the Contractor in accordance with the requirements of this specification:

Storage cabinets
Storage Racks
Shelving
Partitions
Ornamentations
Signs and Billboards
Furnishings

1.3 SUBMITTALS

Government approval is required for submittals with a "G" designation; submittals not having a "G" designation are for information only. When used, a designation following the "G" designation identifies the office that will review the submittal for the Government. The following shall be submitted in accordance with Section 01330 SUBMITTAL PROCEDURES:

SD-02 Shop Drawings

Bracing;
Resilient Vibration Isolation Devices;
Equipment Requirements;

Detail drawings along with catalog cuts, templates, and erection and installation details, as appropriate, for the items listed. Submittals shall be complete in detail; shall indicate thickness, type, grade, class of metal, and dimensions; and shall show construction details, reinforcement, anchorage, and installation with relation to the building construction. For equipment and systems in buildings that have a performance objective higher than life-safety, the drawings shall be stamped by the registered engineer who stamps the calculations required above.

SD-03 Product Data

Bracing
Equipment Requirements

Copies of the design calculations with the detail drawings. Calculations shall be stamped by a registered engineer and shall verify the capability of structural members to which bracing is attached for carrying the load from the brace.

1.4 EQUIPMENT REQUIREMENTS

1.4.1 Rigidly Mounted Equipment

Items to be furnished under this contract shall be constructed and assembled to withstand the seismic forces specified in TI 809-04, Chapter 10. For any rigid equipment which is rigidly attached on both sides of a building expansion joint, flexible joints for piping, electrical conduit, etc., that are capable of accommodating displacements equal to the full width of the joint in both orthogonal directions, shall be provided.

PART 2 PRODUCTS

2.1 BOLTS AND NUTS

Squarehead and hexhead bolts, and heavy hexagon nuts, ASME B18.2.1, ASME B18.2.2, or ASTM A 307 for bolts and ASTM A 563 for nuts. Bolts and nuts used underground and/or exposed to weather shall be galvanized in accordance with ASTM A 153/A 153M.

2.2 SWAY BRACING

Material used for members listed in this section and on the drawings, shall be structural steel conforming with the following:

a. Plates, rods, and rolled shapes, ASTM A 36/A 36M. If the Contractor does the design, both ASTM A 36/A 36Mand ASTM A 572/A 572M, grade 503 will be allowed.

b. Wire rope, ASTM A 603.

c. Tubes, ASTM A 500, Grade B.

d. Pipes, ASTM A 53, Type E or S, Grade B.

e. Light gauge angles, less than 1/4 inch thickness, ASTM A 653/A 653M.

PART 3 EXECUTION

3.1 BRACING

Bracing shall conform to the arrangements shown. Trapeze-type hanger shall be secured with not less than two 1/2 inch bolts.

3.2 BUILDING DRIFT

Sway braces for a piping run shall not be attached to two dissimilar structural elements of a building that may respond differentially during an earthquake unless a flexible joint is provided.

3.3 ANCHOR BOLTS

3.3.1 Cast-In-Place

Floor or pad mounted equipment shall use cast-in-place anchor bolts, except as specified below. One nut shall be provided on each bolt. Anchor bolts shall conform to ASTM A 307. Anchor bolts shall have an embedded straight length equal to at least 12 times nominal diameter of the bolt. Anchor bolts that exceed the normal depth of equipment foundation piers or pads shall either extend into concrete floor or the foundation shall be increased in depth to accommodate bolt lengths.

3.3.2 Expansion or Chemically Bonded Anchors

Expansion or chemically bonded anchors shall not be used unless test data in accordance with ASTM E 488 has been provided to verify the adequacy of the specific anchor and application. Expansion or chemically bonded anchors shall not be used to resist pull-out in overhead and wall installations if the adhesive is manufactured with temperature sensitive epoxies and the location is accessible to a building fire. Expansion and chemically bonded anchors shall be installed in accordance with the manufacturer's recommendations. The allowable forces shall be adjusted for the spacing between anchor bolts and the distance between the anchor bolt and the nearest edge, as specified by the manufacturer.

3.4 RESILIENT VIBRATION ISOLATION DEVICES

Where the need for these devices is determined, based on the magnitude of the design seismic forces, selection of anchor bolts for vibration isolation devices and/or snubbers for equipment base and foundations shall follow the same procedure as in paragraph ANCHOR BOLTS, except that an equipment weight equal to five times the actual equipment weight shall be used.

3.4.1 Resilient and Spring-Type Vibration Devices

Vibration isolation devices shall be selected so that the maximum movement of equipment from the static deflection point shall be 0.5 inches.

3.4.2 Multidirectional Seismic Snubbers

Multidirectional seismic snubbers employing elastomeric pads shall be installed on floor- or slab-mounted equipment. These snubbers shall provide 0.25 inches free vertical and horizontal movement from the static deflection point. Snubber medium shall consist of multiple pads of cotton duct and neoprene or other suitable materials arranged around a flanged steel trunnion so both horizontal and vertical forces are resisted by the snubber medium.

3.5 SWAY BRACES FOR PIPING

Transverse sway bracing for steel and copper pipe shall be provided at intervals not to exceed those shown on the drawings. Transverse sway bracing for pipes of materials other than steel and copper shall be provided at intervals not to exceed the hanger spacing as specified in Section 15400A PLUMBING, GENERAL PURPOSE. Bracing shall consist of at least one vertical angle 2 x 2 x 16 gauge and one diagonal angle of the same size.

3.5.1 Longitudinal Sway Bracing

Longitudinal sway bracing shall be provided in accordance with Section 15070A SEISMIC CONTROL FOR MECHANICAL EQUIPMENT.

3.5.2 Anchor Rods, Angles, and Bars

Anchor rods, angles, and bars shall be bolted to either pipe clamps or pipe flanges at one end and cast-in-place concrete or masonry insert or clip angles bolted to the steel structure on the other end. Rods shall be solid metal or pipe as specified below. Anchor rods, angles, and bars shall not exceed lengths given in the tabulation below.

3.5.3 Maximum Length for Anchor Braces

Type	Size (Inches)	Maximum Length* (Feet/Inches)
Angles	1-1/2 x 1-1/2 x 1/4	4-10
	2 x 2 x 1/4	6-6
	2-1/2 x 1-1/2 x 1/4	8-0
	3 x 2-1/2 x 1/4	8-10
	3 x 3 x 1/4	9-10
Rods	3/4	3-1
	7/8	3-8
Flat Bars	1-1/2 x 1/4	1-2
	2 x 1/4	1-2
	2 x 3/8	1-9
Pipes (40S)	1	7-0
	1-1/4	9-0
	1-1/2	10-4
	2	13-1

3.5.4 Bolts

Bolts used for attachment of anchors to pipe and structure shall be not less than 1/2 inch diameter.

3.6 EQUIPMENT SWAY BRACING

3.6.1 Suspended Equipment and Light Fixtures

Equipment sway bracing shall be provided for items supported from overhead floor or roof structural systems, including light fixtures. Braces shall consist of angles, rods, wire rope, bars, or pipes arranged as shown and secured at both ends with not less than 1/2 inch bolts. Sufficient braces shall be provided for equipment to resist a horizontal force equal to one times the weight of equipment without exceeding safe working stress of bracing components. Details of equipment bracing shall be submitted for acceptance. In lieu of bracing with vertical supports, these items may be supported with hangers inclined at 45 degrees directed up and radially away from equipment and oriented symmetrically in 90-degree intervals on the horizontal plane, bisecting the angles of each corner of the equipment, provided that supporting members are properly sized to support operating weight of equipment when hangers are inclined at a 45-degree angle.

3.6.2 Floor or Pad Mounted Equipment

3.6.2.1 Shear Resistance

Floor mounted equipment shall be bolted to the floor. Requirements for the number and installation of bolts to resist shear forces shall be in accordance with paragraph ANCHOR BOLTS.

3.6.2.2 Overturning Resistance

The ratio of the overturning moment from seismic forces to the resisting moment due to gravity loads shall be used to determine if overturning forces need to be considered in the sizing of anchor bolts. Calculations shall be provided to verify the adequacy of the anchor bolts for combined shear and overturning.

-- End of Section --

SECTION TABLE OF CONTENTS

DIVISION 13 - SPECIAL CONSTRUCTION

SECTION 13100A

LIGHTNING PROTECTION SYSTEM

07/01

PART 1 GENERAL

1.1 REFERENCES
1.2 GENERAL REQUIREMENTS
1.2.1 Verification of Dimensions
1.2.2 System Requirements
1.3 SUBMITTALS

PART 2 PRODUCTS

2.1 MATERIALS
2.1.1 General Requirements
2.1.2 Main and Secondary Conductors
2.1.2.1 Copper
2.1.2.2 Aluminum
2.1.3 Air Terminals
2.1.4 Ground Rods
2.1.5 Connectors
2.1.6 Lightning Protection Components

PART 3 EXECUTION

3.1 INTEGRAL SYSTEM
3.1.1 General Requirements
3.1.1.1 Air Terminals
3.1.1.2 Roof Conductors
3.1.1.3 Down Conductors
3.1.1.4 Interconnection of Metallic Parts
3.1.1.5 Ground Connections
3.1.1.6 Grounding Electrodes
3.1.2 Metal Roofs
3.1.3 Metal Roofs With Metal Walls
3.1.4 Steel Frame Building
3.1.5 Omitted
3.1.6 Omitted
3.1.7 Omitted
3.1.8 Omitted
3.1.9 Omitted
3.2 OMITTED
3.3 OMITTED
3.4 OMITTED
3.5 FENCES
3.6 OMITTED
3.7 OMITTED
3.8 OMITTED
3.9 INSPECTION

-- End of Section Table of Contents --

SECTION 13100A

LIGHTNING PROTECTION SYSTEM
07/01

PART 1 GENERAL

1.1 REFERENCES

The publications listed below form a part of this specification to the extent referenced. The publications are referred to in the text by basic designation only.

AMERICAN NATIONAL STANDARDS INSTITUTE (ANSI)

ANSI C135.30	(1988) Zinc-Coated Ferrous Ground Rods for Overhead or Underground Line Construction

NATIONAL FIRE PROTECTION ASSOCIATION (NFPA)

NFPA 70	(2002) National Electrical Code
NFPA 780	(2000) Installation of Lightning Protection Systems

UNDERWRITERS LABORATORIES (UL)

UL 96	(1994; Rev thru Jan 2000) Lightning Protection Components
UL 96A	(1994; Rev thr Jul 1998) Installation Requirements for Lightning Protection Systems
UL 467	(1993; Rev thru Apr 1999) Grounding and Bonding Equipment
UL Elec Const Dir	(1999) Electrical Construction Equipment Directory

1.2 GENERAL REQUIREMENTS

1.2.1 Verification of Dimensions

The Contractor shall become familiar with all details of the work, verify all dimensions in the field, and shall advise the Contracting Officer of any discrepancy before performing the work. No departures shall be made without the prior approval of the Contracting Officer.

1.2.2 System Requirements

The system furnished under this specification shall consist of the standard products of a manufacturer regularly engaged in the production of lightning protection systems and shall be the manufacturer's latest UL approved design. The lightning protection system shall conform to NFPA 70 and NFPA 780, UL 96 and UL 96A, except where requirements in excess thereof are

specified herein. Each system shall be a certified with a UL Master Label.

1.3 SUBMITTALS

Government approval is required for submittals with a "G" designation; submittals not having a "G" designation are for information only. When used, a designation following the "G" designation identifies the office that will review the submittal for the Government. The following shall be submitted in accordance with Section 01330 SUBMITTAL PROCEDURES:

SD-02 Shop Drawings

Drawings; G|RE

Detail drawings consisting of a complete list of material, including manufacturer's descriptive and technical literature, catalog cuts, drawings, and installation instructions. Detail drawings shall demonstrate that the system has been coordinated and will function as a unit. Drawings shall show proposed layout and mounting and relationship to other parts of the work.

SD-07 Certificates

Materials; G|RE

Where material or equipment is specified to comply with requirements of UL, proof of such compliance. The label of or listing in UL Elec Const Dir will be acceptable evidence. In lieu of the label or listing, a written certificate from an approved nationally recognized testing organization equipped to perform such services, stating that the items have been tested and conform to the requirements and testing methods of Underwriters Laboratories may be submitted. A letter of findings shall be submitted certifying UL inspection of lightning protection systems provided on the following facilities.

PART 2 PRODUCTS

2.1 MATERIALS

2.1.1 General Requirements

No combination of materials shall be used that form an electrolytic couple of such nature that corrosion is accelerated in the presence of moisture unless moisture is permanently excluded from the junction of such metals. Where unusual conditions exist which would cause corrosion of conductors, conductors with protective coatings or oversize conductors shall be used. Where a mechanical hazard is involved, the conductor size shall be increased to compensate for the hazard or the conductors shall be protected by covering them with molding or tubing made of wood or nonmagnetic material. When metallic conduit or tubing is used, the conductor shall be electrically connected at the upper and lower ends.

2.1.2 Main and Secondary Conductors

Conductors shall be in accordance with NFPA 780 and UL 96 for Class I, Class II, or Class II modified materials as applicable.

2.1.2.1 Copper

Copper conductors used on nonmetallic stacks shall weigh not less than 375 pounds per thousand feet, and the size of any wire in the cable shall be not less than No. 15 AWG. The thickness of any web or ribbon used on stacks shall be not less than No. 12 AWG. Counterpoise shall be copper conductors not smaller than No. 1/0 AWG.

2.1.2.2 Aluminum

Aluminum shall not contact the earth nor shall it be used in any other manner that will contribute to rapid deterioration of the metal. Appropriate precautions shall be observed at connections with dissimilar metals. Aluminum conductors for bonding and interconnecting metallic bodies to the main cable shall be at least equivalent to strength and cross-sectional area of a No. 4 AWG aluminum wire. When perforated strips are provided, strips that are much wider than solid strips shall be. A strip width that is at least twice that of the diameter of the perforations shall be used. Aluminum strip for connecting exposed water pipes shall be not less than No. 12 AWG in thickness and at least 1-1/2 inches wide.

2.1.3 Air Terminals

Terminals shall be in accordance with UL 96 and NFPA 780. The tip of air terminals on buildings used for manufacturing, processing, handling, or storing explosives, ammunition, or explosive ingredients shall be a minimum of 2 feet above the ridge parapet, ventilator or perimeter. On open or hooded vents emitting explosive dusts or vapors under natural or forced draft, air terminals shall be a minimum of 5 feet above the opening. On open stacks emitting explosive dusts, gases, or vapor under forced draft, air terminals shall extend a minimum of 15 feet above vent opening. Air terminals more than 24 inches in length shall be supported by a suitable brace, with guides not less than one-half the height of the terminal.

2.1.4 Ground Rods

Rods made of copper-clad steel shall conform to UL 467 and galvanized ferrous rods shall conform to ANSI C135.30. Ground rods shall be not less than 3/4 inch in diameter and 10 feet in length. Ground rods of copper-clad steel, stainless steel, galvanized ferrous, and solid copper shall not be mixed on the job.

2.1.5 Connectors

Clamp-type connectors for splicing conductors shall conform to UL 96, class as applicable, and, Class 2, style and size as required for the installation.

2.1.6 Lightning Protection Components

Lightning protection components, such as bonding plates, air terminal supports, chimney bands, clips, and fasteners shall conform to UL 96, classes as applicable.

PART 3 EXECUTION

3.1 INTEGRAL SYSTEM

3.1.1 General Requirements

The lightning protection system shall consist of air terminals, roof conductors, down conductors, ground connections, and grounds, electrically interconnected to form the shortest distance to ground. The system shall be installed concealed within the building structure as shown on drawing details. All conductors on the structures shall be exposed except where conductors are in protective sleeves exposed on the outside walls. Secondary conductors shall interconnect with grounded metallic parts within the building. Interconnections made within side-flash distances shall be at or above the level of the grounded metallic parts.

3.1.1.1 Air Terminals

Air terminal design and support shall be in accordance with NFPA 780. Terminals shall be rigidly connected to, and made electrically continuous with, roof conductors by means of pressure connectors or crimped joints of T-shaped malleable metal and connected to the air terminal by a dowel or threaded fitting. Air terminals at the ends of the structure shall be set not more than 2 feet from the ends of the ridge or edges and corners of roofs. Spacing of air terminals 2 feet in height on ridges, parapets, and around the perimeter of buildings with flat roofs shall not exceed 25 feet. In specific instances where it is necessary to exceed this spacing, the specified height of air terminals shall be increased not less than 2 inches for each foot of increase over 25 feet. On large, flat or gently sloping roofs, as defined in NFPA 780, air terminals shall be placed at points of the intersection of imaginary lines dividing the surface into rectangles having sides not exceeding 50 feet in length. Air terminals shall be secured against overturning either by attachment to the object to be protected or by means of a substantial tripod or other braces permanently and rigidly attached to the building or structure. Metal projections and metal parts of buildings, smokestacks, and other metal objects that do not contain hazardous materials and that may be struck but not appreciably damaged by lightning, need not be provided with air terminals. However, these metal objects shall be bonded to the lightning conductor through a metal conductor of the same unit weight per length as the main conductor. Where metal ventilators are installed, air terminals shall be mounted thereon, where practicable. Any air terminal erected by necessity adjacent to a metal ventilator shall be bonded to the ventilator near the top and bottom. Where metal ventilators are installed with air terminals mounted thereon, the air terminal shall not be more than 24 inches away from the farther edge or corner. If the air terminal is farther than this distance, an additional air terminal shall be added in order to meet this requirement. Where metal ventilators are installed with air terminals mounted adjacent, the air terminal shall not be more than 24 inches away from the farther edge or corner. If the air terminal is farther than this distance, an additional air terminal shall be added in order to meet this requirement.

3.1.1.2 Roof Conductors

Roof conductors shall be connected directly to the roof or ridge roll. Sharp bends or turns in conductors shall be avoided. Necessary turns shall have a radius of not less than 8 inches. Conductors shall preserve a downward or horizontal course and shall be rigidly fastened every 3 feet

along the roof and down the building to ground. Metal ventilators shall be rigidly connected to the roof conductor at three places. All connections shall be electrically continuous. Roof conductors shall be coursed along the contours of flat roofs, ridges, parapets, and edges; and where necessary, over flat surfaces, in such a way as to join each air terminal to all the rest. Roof conductors surrounding tank tops, decks, flat surfaces, and flat roofs shall be connected to form a closed loop.

3.1.1.3 Down Conductors

Down conductors shall be electrically continuous from air terminals and roof conductors to grounding electrodes. Down conductors shall be coursed over extreme outer portions of the building, such as corners, with consideration given to the location of ground connections and air terminals. Each building or structure shall have not less than two down conductors located as widely separated as practicable, at diagonally opposite corners. On rectangular structures having gable, hip, or gambrel roofs more than 110 feet long, there shall be at least one additional down conductor for each additional 50 feet of length or fraction thereof. On rectangular structures having French, flat, or sawtooth roofs exceeding 250 feet in perimeter, there shall be at least one additional down conductor for each 100 feet of perimeter or fraction thereof. On an L- or T-shaped structure, there shall be at least one additional down conductor; on an H-shaped structure, at least two additional down conductors; and on a wing-built structure, at least one additional down conductor for each wing. On irregularly shaped structures, the total number of down conductors shall be sufficient to make the average distance between them along the perimeter not greater than 100 feet. On structures exceeding 50 feet in height, there shall be at least one additional down conductor for each additional 60 feet of height or fraction thereof, except that this application shall not cause down conductors to be placed about the perimeter of the structure at intervals of less than 50 feet. Additional down conductors shall be installed when necessary to avoid "dead ends" or branch conductors ending at air terminals, except where the air terminal is on a roof below the main protected level and the "dead end" or branch conductor is less than 16 feet in length and maintains a horizontal or downward coursing. Down conductors shall be equally and symmetrically spaced about the perimeter of the structure. Down conductors shall be protected by placing in pvc conduit for a minimum distance of above 10'finished grade level.

3.1.1.4 Interconnection of Metallic Parts

Metal doors, windows, and gutters shall be connected directly to the grounds or down conductors using not smaller than No. 6 copper conductor, or equivalent. Conductors placed where there is probability of unusual wear, mechanical injury, or corrosion shall be of greater electrical capacity than would normally be used, or shall be protected. The ground connection to metal doors and windows shall be by means of mechanical ties under pressure, or equivalent.

3.1.1.5 Ground Connections

Ground connections comprising continuations of down conductors from the structure to the grounding electrode shall securely connect the down conductor and ground in a manner to ensure electrical continuity between the two. All connections shall be of the clamp type. There shall be a ground connection for each down conductor. Metal water pipes and other large underground metallic objects shall be bonded together with all

grounding mediums. Ground connections shall be protected from mechanical injury. In making ground connections, advantage shall be taken of all permanently moist places where practicable, although such places shall be avoided if the area is wet with waste water that contains chemical substances, especially those corrosive to metal.

3.1.1.6 Grounding Electrodes

A grounding electrode shall be provided for each down conductor located as shown. A driven ground shall extend into the earth for a distance of not less than 10 feet. Ground rods shall be set not less than 3 feet, nor more than 8 feet, from the structures foundation. The complete installation shall have a total resistance to ground of not more than 10 ohms. Ground rods shall be tested individually prior to connection to the system and the system as a whole shall be tested not less than 24 hours after rainfall. When the resistance of the complete installation exceeds the specified value or two ground rods individually exceed 10 ohms, the Contracting Officer shall be notified immediately. The counterpoise resistance to corrosion and shall be laid around the perimeter of the structure in a trench not less than 2 feet deep at a distance not less than 3 feet nor more than 8 feet from the nearest point of the structure. All connections between ground connectors and grounds or counterpoise, and between counterpoise and grounds shall be electrically continuous.

3.1.2 Metal Roofs

Wood-Frame, Wall-Bearing Masonry or Tile Structure with Metallic Roof and Nonmetallic Exterior Walls, or Reinforced Concrete Building with Metallic Roof: Metal roofs which are in the form of sections insulated from each other shall be made electrically continuous by bonding. Air terminals shall be connected to, and made electrically continuous with, the metal roof as well as the roof conductors and down conductors. Ridge cables and roof conductors shall be bonded to the roof at the upper and lower edges of the roof and at intervals not to exceed 100 feet. The down conductors shall be bonded to roof conductors and to the lower edge of the metal roof. Where the metal of the roof is in small sections, the air terminals and down conductors shall have connections made to at least four of the sections. All connections shall have electrical continuity and have a surface contact of at least 3 square inches.

3.1.3 Metal Roofs With Metal Walls

Wood-Frame Building With Metal Roof and Metal Exterior Walls: The metal roof and the metal walls shall be bonded and made electrically continuous and considered as one unit. The air terminals shall be connected to and made electrically continuous with the metal roof as well as the roof and down conductors. All connections shall have electrical continuity and have a surface contact of at least 3 square inches.

3.1.4 Steel Frame Building

The steel framework shall be made electrically continuous. Electrical continuity may be provided by bolting, riveting, or welding steel frame, unless a specific method is noted on the drawings. The air terminals shall be connected to the structural steel framework at the ridge. Short runs of conductors shall be used as necessary to join air terminals to the metal framework so that proper placing of air terminals is maintained. Separate down conductors from air terminals to ground connections are not required. Where a grounded metal pipe water system enters the building, the

structural steel framework and the water system shall be connected at the point of entrance by a ground connector. Connections to pipes shall be by means of ground clamps with lugs. Connections to structural framework shall be by means of nut and bolt or welding. All connections between columns and ground connections shall be made at the bottom of the steel columns. Ground connections to grounding electrons or counterpoise shall be run from not less than one-half of all the columns distributed equally around the perimeter of the structure at intervals averaging not more than 60 feet.

3.1.5 Omitted

3.1.6 Omitted

3.1.7 Omitted

3.1.8 Omitted

3.1.9 Omitted

3.2 OMITTED

3.3 OMITTED

3.4 OMITTED

3.5 FENCES

Except as indicated below, metal fences that are electrically continuous with metal posts extending at least 2 feet into the ground require no additional grounding. Other fences shall be grounded on each side of every gate. Fences shall be grounded by means of ground rods every 1000 to 1500 feet of length when fences are located in isolated places, and every 500 to 750 feet when in proximity (100 feet or less) to public roads, highways, and buildings. The connection to ground shall be made from the post where it is of metal and is electrically continuous with the fencing. All metal fences shall be grounded at or near points crossed by overhead lines in excess of 600 volts and at distances not exceeding 150 feet on each side of line crossings.

3.6 OMITTED

3.7 OMITTED

3.8 OMITTED

3.9 INSPECTION

The lightning protection system will be inspected by the Contracting Officer to determine conformance with the requirements of this specification. No part of the system shall be concealed until so authorized by the Contracting Officer.

-- End of Section --

SECTION TABLE OF CONTENTS

DIVISION 13 - SPECIAL CONSTRUCTION

SECTION 13200

UNDERGROUND WATER TANKS

05/04

PART 1 GENERAL

1.1 REFERENCES
1.2 QUALITY ASSURANCE
1.2.1 Permitting
1.2.2 Manufacturer's Certification
1.3 SUBMITTALS
1.4 QUALITY ASSURANCE

PART 2 PRODUCTS

2.1 FIBERGLASS REINFORCED PLASTIC (FRP)WATER STORAGE (DRAFTING) TANKS
2.2 TANK ACCESSORIES
2.2.1 Fill Connection
2.2.2 Suction Connection
2.2.3 Atmospheric Vent
2.2.4 Sounding Rod
2.3 NAMEPLATES

PART 3 EXECUTION

3.1 EARTHWORK
3.2 STORAGE TANK INSTALLATION

-- End of Section Table of Contents --

SECTION 13200

UNDERGROUND WATER TANKS
05/04

PART 1 GENERAL

1.1 REFERENCES

Publications listed below form a part of this specification to the extent referenced. Publications are referred to in the text by basic designation only.

ASTM INTERNATIONAL (ASTM)

ASTM D 4021	(1992) Glass-Fiber-Reinforced Polyester Underground Petroleum Storage Tanks

STEEL TANK INSTITUTE (STI)

STI P3	Underground Steel Storage Tank Protection

UNDERWRITERS LABORATORIES (UL)

UL 58	(1996; Bul. 1997, R 1998) Steel Underground Tanks for Flammable and Combustible Liquids
UL 1316	(1994; R 1996) Glass-Fiber Reinforced Plastic Underground Storage Tanks for Petroleum Products, Alcohols, and Alcohol-Gasoline Mixtures
UL 1746	(1993; Bul. 1997, R 1998) External Corrosion Protection Systems for Steel Underground Storage Tanks

1.2 QUALITY ASSURANCE

1.2.1 Permitting

Contractor shall obtain necessary permits in conjunction with installation of underground water storage tanks as may be required by state, or local authority. Submit a copy of permits to the Contracting Officer.

1.2.2 Manufacturer's Certification

Tank installers shall be certified by the tank manufacturer on installation procedures. Submit certification from the tank manufacturer to the Contracting Officer.

1.3 SUBMITTALS

Government approval is required for submittals with a "G" designation; submittals not having a "G" designation are for information only or as otherwise designated. When used, a designation following the "G"

designation identifies the office that will review the submittal for the Government. The following shall be submitted in accordance with Section 01330 SUBMITTAL PROCEDURES:

SD-03 Product Data

Tanks

Accessories

SD-07 Certificates

Permits

SD-08 Manufacturer's Instructions

Tank installation

SD-10 Operation and Maintenance Data

Tanks, Data Package 1

Submit in accordance with Section 01781 OPERATION AND MAINTENANCE DATA.

1.4 QUALITY ASSURANCE

PART 2 PRODUCTS

2.1 FIBERGLASS REINFORCED PLASTIC (FRP)WATER STORAGE (DRAFTING) TANKS

Underground storage tanks shall be single-wall horizontal type conforming to NFPA 31 constructed of fiber. Capacity 10,000 gallons. Design and construction of tanks shall comply with UL 1316, ASTM D 4021, STI P3 Type II, or UL 58 Type II with UL 1746 external protection. Tanks constructed with lap shell or head joints in accordance with UL 58 shall be continuous fillet welded; both on the interior and exterior surfaces. Tank shall have the UL label affixed to the exterior surface of the tank. Tanks requiring concrete anchor pads shall be provided with hold-down straps and corrosion resistant accessories in accordance with the manufacturer's recommendation. Concrete anchor pads shall be constructed as indicated. Tank shall bave interior baffles to prevent backwave during filling.

2.2 TANK ACCESSORIES

2.2.1 Fill Connection

Fill line shall be 4 inch minimum diameter and extend to within 6 inches of tank bottom. From top of tank, lines shall extend vertically or shall slope upward on a uniform grade and connected to a tight fit fill adapter with a locking type cap. Tight fit fill adapter shall be bronze, fitted with a fluoroelastomer gasket suitable for fuel being provided. Provide a 3 gallon minimum fill port containment unit for the fill adapter that allows differential settlement between tank and ground surface.

2.2.2 Suction Connection

Provide suction line located at the opposite end of tank from fill line. Suction line shall be 4 inch minimum diameter and extend to within 4 inches

of the tank bottom unless indicated otherwise.

2.2.3 Atmospheric Vent

Vent pipe shall slope back to tank, terminate at least 12 feet above grade or 2 feet above roofs of adjacent buildings.

2.2.4 Sounding Rod

Provide wood sounding rod of required length, evenly graduated and marked to read level of fuel remaining in tank in inches. Rod shall be seasoned maple or other close grained wood. Tank end of rod shall have a non-sparking cap. Provide two charts showing tank capacity in U.S. gallons in 1/8 inch increments.

2.3 NAMEPLATES

Each major item of equipment shall have the manufacturer's name, address, type or style, model or serial number, and catalog number on a plate secured to the item of equipment.

PART 3 EXECUTION

3.1 EARTHWORK

Excavation and backfilling for tanks shall be as specified in Section 02300 EARTHWORK.

3.2 STORAGE TANK INSTALLATION

Tank installation shall be performed by personnel certified by the tank manufacturer. Install Position tanks so that discharge pipes slope up toward outlet. Each tank fill connection shall extend 8 inches above finished grade. Position tanks on a 1/8 inch per foot slope with vent connection at the high end. Provide a minimum 12 inchthickness of fill material between the bottom of tank and top of the concrete hold-down pad as recommended by the manufacture. Provide fiber glass reinforced plastic hold-down straps and corrosion resistant accessories as recommended by the FRP or composite tank manufacturer. Coat straps, turnbuckles, and anchors to resist corrosion.

-- End of Section --

SECTION TABLE OF CONTENTS

DIVISION 13 - SPECIAL CONSTRUCTION

SECTION 13280A

ASBESTOS ABATEMENT

11/01

PART 1 GENERAL

1.1 REFERENCES
1.2 DEFINITIONS
1.3 DESCRIPTION OF WORK
1.3.1 Abatement Work Tasks
1.3.2 Unexpected Discovery of Asbestos
1.4 SUBMITTALS
1.5 QUALIFICATIONS
1.5.1 Written Qualifications and Organization Report
1.5.2 Specific Requirements
1.5.3 Federal, State or Local Citations on Previous Projects
1.6 REGULATORY REQUIREMENTS
1.7 SAFETY AND HEALTH PROGRAM AND PLANS
1.7.1 Asbestos Hazard Abatement Plan Appendix
1.7.2 Activity Hazard Analyses Appendix
1.8 PRECONSTRUCTION CONFERENCE AND ONSITE SAFETY
1.9 SECURITY
1.10 MEDICAL REQUIREMENTS
1.10.1 Medical Examinations
1.10.1.1 Information Provided to the Physician
1.10.1.2 Written Medical Opinion
1.10.2 Medical and Exposure Records
1.11 TRAINING PROGRAM
1.11.1 General Training Requirements
1.11.2 Project Specific Training
1.12 RESPIRATORY PROTECTION PROGRAM
1.12.1 Respiratory Fit Testing
1.12.2 Respirator Selection and Use Requirements
1.12.3 Class I Work
1.12.4 Class II and III Work
1.12.5 Sanitation
1.13 HAZARD COMMUNICATION PROGRAM
1.14 LICENSES, PERMITS AND NOTIFICATIONS
1.14.1 General Legal Requirements
1.14.2 Litigation and Notification
1.15 PERSONAL PROTECTIVE EQUIPMENT
1.15.1 Respirators
1.15.2 Whole Body Protection
1.15.2.1 Coveralls
1.15.2.2 Underwear
1.15.2.3 Work Clothing
1.15.2.4 Gloves
1.15.2.5 Foot Coverings
1.15.2.6 Head Covering
1.15.2.7 Protective Eye Wear
1.16 HYGIENE FACILITIES AND PRACTICES
1.16.1 Shower Facilities

1.16.2 3-Stage Decontamination Area
1.16.3 Load-Out Unit
1.16.4 Single Stage Decontamination Area
1.16.5 Decontamination Requirements for Class IV Work
1.16.6 Decontamination Area Entry Procedures
1.16.7 Decontamination Area Exit Procedures
1.16.8 Lunch Areas
1.16.9 Smoking
1.17 REGULATED AREAS
1.18 WARNING SIGNS AND TAPE
1.19 WARNING LABELS
1.20 LOCAL EXHAUST VENTILATION
1.21 TOOLS
1.22 RENTAL EQUIPMENT
1.23 AIR MONITORING EQUIPMENT
1.24 EXPENDABLE SUPPLIES
1.24.1 Glovebag
1.24.2 Duct Tape
1.24.3 Disposal Containers
1.24.4 Disposal Bags
1.24.5 Sheet Plastic
1.24.5.1 Flame Resistant
1.24.5.2 Reinforced
1.24.6 Amended Water
1.24.7 Mastic Removing Solvent
1.24.8 Leak-tight Wrapping
1.24.9 Viewing Inspection Window
1.24.10 Wetting Agents
1.25 MISCELLANEOUS ITEMS

PART 2 PRODUCTS

2.1 ENCAPSULANTS
2.2 RECYCLABLE MATERIALS

PART 3 EXECUTION

3.1 GENERAL REQUIREMENTS
3.2 PROTECTION OF ADJACENT WORK OR AREAS TO REMAIN
3.3 OBJECTS
3.3.1 Removal of Mobile Objects
3.4 BUILDING VENTILATION SYSTEM AND CRITICAL BARRIERS
3.5 PRECLEANING
3.6 METHODS OF COMPLIANCE
3.6.1 Mandated Practices
3.6.2 Control Methods
3.6.3 Unacceptable Practices
3.6.4 Class I Work Procedures
3.6.5 Specific Control Methods for Class I Work
3.6.5.1 Negative Pressure Enclosure (NPE) System
3.6.5.2 Glovebag Systems
3.6.5.3 Wrap and Cut Operation
3.6.6 Class II Work
3.6.7 Specific Control Methods for Class II Work
3.6.7.1 Vinyl and Asphalt Flooring Materials
3.6.7.2 Roofing Material
3.6.7.3 Cementitious Siding and Shingles or Transite Panels
3.6.7.4 Other Class II Jobs
3.6.8 Specific Control Methods for Class IV Work

3.6.9 Cleaning After Asbestos Removal
3.6.10 Class I Asbestos Work Response Action Detail Sheets
3.6.11 Class II Asbestos Work Response Action Detail Sheets
3.6.12 Abatement of Asbestos Contaminated Soil
3.7 FINAL CLEANING AND VISUAL INSPECTION
3.8 LOCKDOWN
3.9 EXPOSURE ASSESSMENT AND AIR MONITORING
3.9.1 General Requirements For Exposure
3.9.2 Initial Exposure Assessment
3.9.3 Negative Exposure Assessment
3.9.4 Independent Environmental Monitoring
3.9.5 Preabatement Environmental Air Monitoring
3.9.6 Environmental Air Monitoring During Abatement
3.9.7 Final Clearance Air Monitoring
3.9.7.1 Final Clearance Requirements, NIOSH PCM Method
3.9.7.2 Air Clearance Failure
3.9.8 Air-Monitoring Results and Documentation
3.10 CLEARANCE CERTIFICATION
3.11 CLEANUP AND DISPOSAL
3.11.1 Title to ACM Materials
3.11.2 Collection and Disposal of Asbestos
3.11.3 Asbestos Waste Shipment Record

-- End of Section Table of Contents --

UFGS-13280A (November 2001)

SECTION 13280A

ASBESTOS ABATEMENT
11/01

PART 1 GENERAL

1.1 REFERENCES

The publications listed below form a part of this specification to the extent referenced. The publications are referred to in the text by basic designation only.

AMERICAN NATIONAL STANDARDS INSTITUTE (ANSI)

ANSI Z87.1	(1989; Errata; Z87.1a) Occupational and Educational Eye and Face Protection
ANSI Z88.2	(1992) Respiratory Protection
ANSI Z9.2	(1979; R 1991) Fundamentals Governing the Design and Operation of Local Exhaust Systems

AMERICAN SOCIETY FOR TESTING AND MATERIALS (ASTM)

ASTM C 732	(1995) Aging Effects of Artificial Weathering on Latex Sealants
ASTM D 1331	(1989; R 1995) Surface and Interfacial Tension of Solutions of Surface-Active Agents
ASTM D 2794	(1993; R 1999el) Resistance of Organic Coatings to the Effects of Rapid Deformation (Impact)
ASTM D 4397	(1996) Polyethylene Sheeting for Construction, Industrial, and Agricultural Applications
ASTM D 522	(1993a) Mandrel Bend Test of Attached Organic Coatings
ASTM E 119	(2000) Fire Tests of Building Construction and Materials
ASTM E 1368	(2000) Visual Inspection of Asbestos Abatement Projects
ASTM E 736	(1992) Cohesion/Adhesion of Sprayed Fire-Resistive Materials Applied to Structural Members
ASTM E 84	(2000a) Surface Burning Characteristics of

	Building Materials
ASTM E 96	(2000) Water Vapor Transmission of Materials

COMPRESSED GAS ASSOCIATION (CGA)

CGA G-7	(1990) Compressed Air for Human Respiration
CGA G-7.1	(1997) Commodity Specification for Air

NATIONAL FIRE PROTECTION ASSOCIATION (NFPA)

NFPA 701	(1999) Methods of Fire Tests for Flame-Resistant Textiles and Films

NATIONAL INSTITUTE FOR OCCUPATIONAL SAFETY AND HEALTH (NIOSH)

NIOSH 84-100	(1984; Supple 1985, 1987, 1988 & 1990) NIOSH Manual of Analytical Methods

U.S. ARMY CORPS OF ENGINEERS (USACE)

EM 385-1-1	(2003) U.S. Army Corps of Engineers Safety and Health Requirements Manual

U.S. ENVIRONMENTAL PROTECTION AGENCY (EPA)

EPA 340/1-90/018	(1990) Asbestos/NESHAP Regulated Asbestos Containing Materials Guidance
EPA 340/1-90/019	(1990) Asbestos/NESHAP Adequately Wet Guidance
EPA 560/5-85-024	(1985) Guidance for Controlling Asbestos-Containing Materials in Buildings

U.S. NATIONAL ARCHIVES AND RECORDS ADMINISTRATION (NARA)

29 CFR 1910	Occupational Safety and Health Standards
29 CFR 1926	Safety and Health Regulations for Construction
40 CFR 61	National Emission Standards for Hazardous Air Pollutants
40 CFR 763	Asbestos
42 CFR 84	Approval of Respiratory Protective Devices
49 CFR 107	Hazardous Materials Program Procedures
49 CFR 171	General Information, Regulations, and Definitions
49 CFR 172	Hazardous Materials Table, Special Provisions, Hazardous Materials Communications, Emergency Response

	Information, and Training Requirements
49 CFR 173	Shippers - General Requirements for Shipments and Packagings

UNDERWRITERS LABORATORIES (UL)

UL 586	(1996; Rev thru Aug 1999) High-Efficiency, Particulate, Air Filter Units

1.2 DEFINITIONS

a. Adequately Wet: A term defined in 40 CFR 61, Subpart M, and EPA 340/1-90/019 meaning to sufficiently mix or penetrate with liquid to prevent the release of particulate. If visible emissions are observed coming from asbestos-containing material (ACM), then that material has not been adequately wetted. However, the absence of visible emissions is not sufficient evidence of being adequately wetted.

b. Aggressive Method: Removal or disturbance of building material by sanding, abrading, grinding, or other method that breaks, crumbles, or disintegrates intact asbestos-containing material (ACM).

c. Amended Water: Water containing a wetting agent or surfactant with a surface tension of at least 29 dynes per square centimeter when tested in accordance with ASTM D 1331.

d. Asbestos: Asbestos includes chrysotile, amosite, crocidolite, tremolite asbestos, anthophylite asbestos, actinolite asbestos, and any of these minerals that have been chemically treated and/or altered.

e. Asbestos-Containing Material (ACM): Any materials containing more than one percent asbestos.

f. Asbestos Fiber: A particulate form of asbestos, 5 micrometers or longer, with a length-to-width ratio of at least 3 to 1.

g. Authorized Person: Any person authorized by the Contractor and required by work duties to be present in the regulated areas.

h. Building Inspector: Individual who inspects buildings for asbestos and has EPA Model Accreditation Plan (MAP) "Building Inspector" training; accreditation required by 40 CFR 763, Subpart E, Appendix C.

i. Certified Industrial Hygienist (CIH): An Industrial Hygienist certified in the practice of industrial hygiene by the American Board of Industrial Hygiene.

j. Class I Asbestos Work: Activities defined by OSHA involving the removal of thermal system insulation (TSI) and surfacing ACM.

k. Class II Asbestos Work: Activities defined by OSHA involving the removal of ACM which is not thermal system insulation or surfacing material. This includes, but is not limited to, the removal of asbestos - containing wallboard, floor tile and sheeting, roofing

and siding shingles, and construction mastic. Certain "incidental" roofing materials such as mastic, flashing and cements when they are still intact are excluded from Class II asbestos work. Removal of small amounts of these materials which would fit into a glovebag may be classified as a Class III job.

l. Class III Asbestos Work: Activities defined by OSHA that involve repair and maintenance operations, where ACM, including TSI and surfacing ACM, is likely to be disturbed. Operations may include drilling, abrading, cutting a hole, cable pulling, crawling through tunnels or attics and spaces above the ceiling, where asbestos is actively disturbed or asbestos-containing debris is actively disturbed.

m. Class IV Asbestos Work: Maintenance and custodial construction activities during which employees contact but do not disturb ACM and activities to clean-up dust, waste and debris resulting from Class I, II, and III activities. This may include dusting surfaces where ACM waste and debris and accompanying dust exists and cleaning up loose ACM debris from TSI or surfacing ACM following construction.

n. Clean room: An uncontaminated room having facilities for the storage of employees' street clothing and uncontaminated materials and equipment.

o. Competent Person: In addition to the definition in 29 CFR 1926, Section .32(f), a person who is capable of identifying existing asbestos hazards as defined in 29 CFR 1926, Section .1101, selecting the appropriate control strategy, has the authority to take prompt corrective measures to eliminate them and has EPA Model Accreditation Plan (MAP) "Contractor/Supervisor" training; accreditation required by 40 CFR 763, Subpart E, Appendix C.

p. Contractor/Supervisor: Individual who supervises asbestos abatement work and has EPA Model Accreditation Plan "Contractor/Supervisor" training; accreditation required by 40 CFR 763, Subpart E, Appendix C.

q. Critical Barrier: One or more layers of plastic sealed over all openings into a regulated area or any other similarly placed physical barrier sufficient to prevent airborne asbestos in a regulated area from migrating to an adjacent area.

r. Decontamination Area: An enclosed area adjacent and connected to the regulated area and consisting of an equipment room, shower area, and clean room, which is used for the decontamination of workers, materials, and equipment that are contaminated with asbestos.

s. Demolition: The wrecking or taking out of any load-supporting structural member and any related razing, removing, or stripping of asbestos products.

t. Disposal Bag: A 6 mil thick, leak-tight plastic bag, pre-labeled in accordance with 29 CFR 1926, Section .1101, used for transporting asbestos waste from containment to disposal site.

u. Disturbance: Activities that disrupt the matrix of ACM, crumble

or pulverize ACM, or generate visible debris from ACM. Disturbance includes cutting away small amounts of ACM, no greater than the amount which can be contained in 1 standard sized glovebag or waste bag, not larger than 60 inches in length and width in order to access a building component.

v. Equipment Room or Area: An area adjacent to the regulated area used for the decontamination of employees and their equipment.

w. Employee Exposure: That exposure to airborne asbestos that would occur if the employee were not using respiratory protective equipment.

x. Fiber: A fibrous particulate, 5 micrometers or longer, with a length to width ratio of at least 3 to 1.

y. Friable ACM: A term defined in 40 CFR 61, Subpart M and EPA 340/1-90/018 meaning any material which contains more than 1 percent asbestos, as determined using the method specified in 40 CFR 763, Subpart E, Appendix A, Section 1, Polarized Light Microscopy (PLM), that when dry, can be crumbled, pulverized, or reduced to powder by hand pressure. If the asbestos content is less than 10 percent, as determined by a method other than point counting by PLM, the asbestos content is verified by point counting using PLM.

z. Glovebag: Not more than a 60 by 60 inch impervious plastic bag-like enclosure affixed around an asbestos-containing material, with glove-like appendages through which material and tools may be handled.

aa. High-Efficiency Particulate Air (HEPA) Filter: A filter capable of trapping and retaining at least 99.97 percent of all mono-dispersed particles of 0.3 micrometers in diameter.

bb. Homogeneous Area: An area of surfacing material or thermal system insulation that is uniform in color and texture.

cc. Industrial Hygienist: A professional qualified by education, training, and experience to anticipate, recognize, evaluate, and develop controls for occupational health hazards.

dd. Intact: ACM which has not crumbled, been pulverized, or otherwise deteriorated so that the asbestos is no longer likely to be bound with its matrix. Removal of "intact" asphaltic, resinous, cementitious products does not render the ACM non-intact simply by being separated into smaller pieces.

ee. Model Accreditation Plan (MAP): USEPA training accreditation requirements for persons who work with asbestos as specified in 40 CFR 763, Subpart E, Appendix C.

ff. Modification: A changed or altered procedure, material or component of a control system, which replaces a procedure, material or component of a required system.

gg. Negative Exposure Assessment: A demonstration by the Contractor to show that employee exposure during an operation is expected to be consistently below the OSHA Permissible Exposure Limits (PELs).

hh. NESHAP: National Emission Standards for Hazardous Air Pollutants. The USEPA NESHAP regulation for asbestos is at 40 CFR 61, Subpart M.

ii. Nonfriable ACM: A NESHAP term defined in 40 CFR 61, Subpart M and EPA 340/1-90/018 meaning any material containing more than 1 percent asbestos, as determined using the method specified in 40 CFR 763, Subpart E, Appendix A, Section 1, Polarized Light Microscopy, that, when dry, cannot be crumbled, pulverized or reduced to powder by hand pressure.

jj. Nonfriable ACM (Category I): A NESHAP term defined in 40 CFR 61, Subpart E and EPA 340/1-90/018 meaning asbestos-containing packings, gaskets, resilient floor covering, and asphalt roofing products containing more than 1 percent asbestos as determined using the method specified in 40 CFR 763, Subpart F, Appendix A, Section 1, Polarized Light Microscopy.

kk. Nonfriable ACM (Category II): A NESHAP term defined in 40 CFR 61, Subpart E and EPA 340/1-90/018 meaning any material, excluding Category I nonfriable ACM, containing more than 1 percent asbestos, as determined using the methods specified in 40 CFR 763, Subpart F, Appendix A, Section 1, Polarized Light Microscopy, that when dry, cannot be crumbled, pulverized, or reduced to powder by hand pressure.

ll. Permissible Exposure Limits (PELs):

(1) PEL-Time weighted average(TWA): Concentration of asbestos not in excess of 0.1 fibers per cubic centimeter of air (f/cc) as an 8 hour time weighted average (TWA), as determined by the method prescribed in 29 CFR 1926, Section .1101, Appendix A, or the current version of NIOSH 84-100 analytical method 7400.

(2) PEL-Excursion Limit: An airborne concentration of asbestos not in excess of 1.0 f/cc of air as averaged over a sampling period of 30 minutes as determined by the method prescribed in 29 CFR 1926, Section .1101, Appendix A, or the current version of NIOSH 84-100 analytical method 7400.

mm. Regulated Area: An OSHA term defined in 29 CFR 1926, Section .1101 meaning an area established by the Contractor to demarcate areas where Class I, II, and III asbestos work is conducted; also any adjoining area where debris and waste from such asbestos work accumulate; and an area within which airborne concentrations of asbestos exceed, or there is a reasonable possibility they may exceed, the permissible exposure limit.

nn. Removal: All operations where ACM is taken out or stripped from structures or substrates, and includes demolition operations.

oo. Repair: Overhauling, rebuilding, reconstructing, or reconditioning of structures or substrates, including encapsulation or other repair of ACM attached to structures or substrates. If the amount of asbestos so "disturbed" cannot be contained in 1 standard glovebag or waste bag, Class I precautions are required.

pp. Spills/Emergency Cleanups: Cleanup of sizable amounts of asbestos waste and debris which has occurred, for example, when water damage occurs in a building, and sizable amounts of ACM are dislodged. A Competent Person evaluates the site and ACM to be handled, and based on the type, condition and extent of the dislodged material, classifies the cleanup as Class I, II, or III. Only if the material was intact and the cleanup involves mere contact of ACM, rather than disturbance, could there be a Class IV classification.

qq. Surfacing ACM: Asbestos-containing material which contains more than 1% asbestos and is sprayed-on, troweled-on, or otherwise applied to surfaces, such as acoustical plaster on ceilings and fireproofing materials on structural members, or other materials on surfaces for acoustical, fireproofing, or other purposes.

rr. Thermal system insulation (TSI) ACM: ACM which contains more than 1% asbestos and is applied to pipes, fittings, boilers, breeching, tanks, ducts, or other interior structural components to prevent heat loss or gain or water condensation.

ss. Transite: A generic name for asbestos cement wallboard and pipe.

tt. Worker: Individual (not designated as the Competent Person or a supervisor) who performs asbestos work and has completed asbestos worker training required by 29 CFR 1926, Section .1101, to include EPA Model Accreditation Plan (MAP) "Worker" training; accreditation required by 40 CFR 763, Subpart E, Appendix C, if required by the OSHA Class of work to be performed or by the state where the work is to be performed.

1.3 DESCRIPTION OF WORK

The work covered by this section includes the removal of asbestos-containing materials (ACM) which are encountered during demolition activities associated with this project and describes procedures and equipment required to protect workers and occupants of the regulated area from contact with airborne asbestos fibers and ACM dust and debris. Activities include OSHA Class I and Class II work operations involving ACM. The work also includes containment, storage, transportation and disposal of the generated ACM wastes. The work in Building 4600 includes removal of asbestos-containing pipe insulation, multiple layers of floor tile and associated mastic, ceiling tile, cementitious siding, wall glue dots, roofing materials, and windows with asbestos-containing glazing. The work is required to be performed in two phases to facilitate partial demolition of the building. The anticipated boundary between phases is shown on the drawings. During Phase 1, the remaining portion of the building will be occupied. Within the Phase 1 work, two mobilizations will be required to address the asbestos-containing pipe insulation within the building and then the asbestos-containing pipe insulation on underground abandoned piping.

The work in Building 4605 include the removal of floor tile with asbestos-containing floor tile mastic and roofing materials.

The work in Building 4610 includes the removal of floor tile with asbestos-containing floor tile mastic and a pitch pocket on the roof.

The work in Building 4620 includes the removal of floor tile with asbestos-containing floor tile and mastic (multiple layers), wall glue dots, and roofing materials.

More specific operational procedures shall be detailed in the required Accident Prevention Plan and its subcomponents, the Asbestos Hazard Abatement Plan and Activity Hazard Analyses required in paragraph SAFETY AND HEALTH PROGRAM AND PLANS.

1.3.1 Abatement Work Tasks

The specific ACM to be abated is identified on the detailed plans and project drawings. A summary of work task data elements for each individual ACM abatement work task to include the appropriate RESPONSE ACTION DETAIL SHEET (item to be abated and methods to be used) and SET-UP DETAIL SHEETS (containment techniques to include safety precautions and methods) is included in Table 1, "Individual Work Task Data Elements" at the end of this section. (Reference www.hnd.usace.army.mil/index for EP1110-1.11. Work will leave asbestos-containing materials in place at limits of Phase 1 work boundary and at limits of underground piping. Exposed asbestos-containing materials remaining at such boundaries shall be encapsulated and sealed with lagging.

Use of glovebag removal techniques shall be limited to small lengths of pipe runs and elbows and fittings. Glovebag techniques shall also be used in conjunction with wrap and cut methods of 3.6.5.4.

1.3.2 Unexpected Discovery of Asbestos

For any previously untested building components suspected to contain asbestos and located in areas impacted by the work, the Contractor shall notify the Contracting Officer (CO) who will have the option of ordering up to 10 bulk samples to be obtained at the Contractor's expense and delivered to a laboratory accredited under the National Institute of Standards and Technology (NIST) "National Voluntary Laboratory Accreditation Program (NVLAP)" and analyzed by PLM at no additional cost to the Government. Any additional components identified as ACM that have been approved by the Contracting Officer for removal shall be removed by the Contractor and will be paid for by an equitable adjustment to the contract price under the CONTRACT CLAUSE titled "changes". Sampling activities undertaken to determine the presence of additional ACM shall be conducted by personnel who have successfully completed the EPA Model Accreditation Plan (MAP) "Building Inspector" training course required by 40 CFR 763, Subpart E, Appendix C.

1.4 SUBMITTALS

Government approval is required for submittals with a "G" designation; submittals not having a "G" designation are for information only. When used, a designation following the "G" designation identifies the office that will review the submittal for the Government. All asbestos-related submittals shall be reviewed by the Savannah District Safety and Occupational Health Office (SO). The following shall be submitted in accordance with Section 01330 SUBMITTAL PROCEDURES:

SD-03 Product Data

Respiratory Protection Program; G, RE

Records of the respirator program.

Cleanup and Disposal; G, RE

Waste shipment records. Weigh bills and delivery tickets shall be furnished for information only.

Detailed Drawings; G, RE

Descriptions, detail project drawings, and site layout to include worksite containment area techniques as prescribed on applicable SET-UP DETAIL SHEETS, local exhaust ventilation system locations, decontamination units and load-out units, other temporary waste storage facility, access tunnels, location of temporary utilities (electrical, water, sewer) and boundaries of each regulated area.

Materials and Equipment; G, RE

Manufacturer's catalog data for all materials and equipment to be used in the work, including brand name, model, capacity, performance characteristics and any other pertinent information. Test results and certificates from the manufacturer of encapsulants substantiating compliance with performance requirements of this specification. Material Safety Data Sheets for all chemicals to be used onsite in the same format as implemented in the Contractor's HAZARD COMMUNICATION PROGRAM. Data shall include, but shall not be limited to, the following items:

a. High Efficiency Filtered Air (HEPA) local exhaust equipment

b. Vacuum cleaning equipment

c. Pressure differential monitor for HEPA local exhaust equipment

d. Air monitoring equipment

e. Respirators

f. Personal protective clothing and equipment

(1) Coveralls
(2) Underclothing
(3) Other work clothing
(4) Foot coverings
(5) Hard hats
(6) Eye protection
(7) Other items required and approved by Contractors Designated IH and Competent Person

g. Glovebag

h. Duct Tape

i. Disposal Containers

(1) Disposal bags

(2) Fiberboard drums
(3) Paperboard boxes

j. Sheet Plastic

(1) Polyethylene Sheet - General
(2) Polyethylene Sheet - Flame Resistant
(3) Polyethylene Sheet - Reinforced

k. Wetting Agent

(1) Amended Water
(2) Removal encapsulant

l. Strippable Coating

m. Prefabricated Decontamination Unit

n. Other items

o. Chemical encapsulant

p. Chemical encasement materials

q. Material Safety Data Sheets (for all chemicals proposed)

Qualifications; G, RE

A written report providing evidence of qualifications for personnel, facilities and equipment assigned to the work.

Training Program; G, RE

A copy of the written project site-specific training material as indicated in 29 CFR 1926, Section .1101 that will be used to train onsite employees. The training document shall be signed by the Contractor's Designated IH and Competent Person.

Medical Requirements; G, RE

Physician's written opinion.

Encapsulants; G, RE

Certificates stating that encapsulants meet the applicable specified performance requirements.

SD-06 Test Reports

Exposure Assessment and Air Monitoring; G, RE

Initial exposure assessments, negative exposure assessments, air-monitoring results and documentation.

Local Exhaust Ventilation

Licenses, Permits and Notifications; G, RE

Licenses, Certifications, permits, and notifications as listed

in Sections 1.5, 1.6, and 1.7..

SD-07 Certificates

Vacuum, Filtration and Ventilation Equipment

Manufacturer's certifications showing compliance with ANSI Z9.2 for:

a. Vacuums.

b. Water filtration equipment.

c. Ventilation equipment.

d. Other equipment required to contain airborne asbestos fibers.

1.5 QUALIFICATIONS

1.5.1 Written Qualifications and Organization Report

The Contractor shall furnish a written qualifications and organization report providing evidence of qualifications of the Contractor, Contractor's Project Supervisor, Designated Competent Person, supervisors and workers; Designated IH (person assigned to project and firm name); independent testing laboratory (including name of firm, principal, and analysts who will perform analyses); all subcontractors to be used including disposal transportation and disposal facility firms, subcontractor supervisors, subcontractor workers; and any others assigned to perform asbestos abatement and support activities. The report shall include an organization chart showing the Contractor's staff organization for this project by name and title, chain of command and reporting relationship with all subcontractors. The report shall be signed by the Contractor, the Contractor's onsite project manager, Designated Competent Person, Designated IH, designated testing laboratory and the principals of all subcontractors to be used. The Contractor shall include the following statement in the report: "By signing this report I certify that the personnel I am responsible for during the course of this project fully understand the contents of 29 CFR 1926, Section .1101, 40 CFR 61, Subpart M, and the federal, state and local requirements specified in paragraph SAFETY AND HEALTH PROGRAM AND PLANS for those asbestos abatement activities that they will be involved in."

1.5.2 Specific Requirements

The Contractor shall designate in writing, personnel meeting the following qualifications:

a. Designated Competent Person: The name, address, telephone number, and resume of the Contractor's Designated Competent Person shall be provided. Evidence that the full-time Designated Competent Person is qualified in accordance with 29 CFR 1926, Sections .32 and .1101, has EPA Model Accreditation Plan (MAP) "Contractor/Supervisor" training accreditation required by 40 CFR 763, Subpart E, Appendix C, and is experienced in the administration and supervision of asbestos abatement projects, including exposure assessment and monitoring, work practices, abatement methods, protective measures for personnel, setting up and inspecting asbestos abatement work areas, evaluating the

integrity of containment barriers, placement and operation of local exhaust systems, ACM generated waste containment and disposal procedures, decontamination units installation and maintenance requirements, site safety and health requirements, notification of other employees onsite, etc. The duties of the Competent Person shall include the following: controlling entry to and exit from the regulated area; supervising any employee exposure monitoring required by 29 CFR 1926, Section .1101; ensuring that all employees working within a regulated area wear the appropriate personal protective equipment (PPE), are trained in the use of appropriate methods of exposure control, and use the hygiene facilities and decontamination procedures specified; and ensuring that engineering controls in use are in proper operating conditions and are functioning properly. The Designated Competent Person shall be responsible for compliance with applicable federal, state and local requirements, the Contractor's Accident Prevention Plan and Asbestos Hazard Abatement Plan. The Designated Competent Person shall provide, and the Contractor shall submit, the "Contractor/Supervisor" course completion certificate and the most recent certificate for required refresher training with the employee "Certificate of Worker Acknowledgment" required by this paragraph. The Contractor shall submit evidence that this person has a minimum of 2 years of on-the-job asbestos abatement experience relevant to OSHA competent person requirements. The Designated Competent Person shall be onsite at all times during the conduct of this project.

b. Project and Other Supervisors: The Contractor shall provide the name, address, telephone number, and resume of the Project Supervisor and other supervisors who have responsibility to implement the Accident Prevention Plan, including the Asbestos Hazard Abatement Plan and Activity Hazard Analyses, the authority to direct work performed under this contract and verify compliance, and have EPA Model Accreditation Plan (MAP) "Contractor/Supervisor" training accreditation required by 40 CFR 763, Subpart E, Appendix C. The Project Supervisor and other supervisors shall provide, and the Contractor shall submit, the "Contractor/Supervisor" course completion certificate and the most recent certificate for required refresher training with the employee "Certificate of Worker Acknowledgment" required by this paragraph. The Contractor shall submit evidence that the Project Supervisor has a minimum of 2 years of on-the-job asbestos abatement experience relevant to project supervisor responsibilities and the other supervisors have a minimum of 1 year on-the-job asbestos abatement experience commensurate with the responsibilities they will have on this project.

c. Designated Industrial Hygienist: The Contractor shall provide the name, address, telephone number, resume and other information specified below for the Industrial Hygienist (IH) selected to prepare the Contractor's Asbestos Hazard Abatement Plan, prepare and perform training, direct air monitoring and assist the Contractor's Competent Person in implementing and ensuring that safety and health requirements are complied with during the performance of all required work. The Designated IH shall be a person who is board certified in the practice of industrial hygiene as determined and documented by the American Board of Industrial Hygiene (ABIH), has EPA Model Accreditation Plan (MAP) "Contractor/Supervisor" training accreditation required by 40 CFR

763, Subpart E, Appendix C, and has a minimum of 2 years of comprehensive experience in planning and overseeing asbestos abatement activities. The Designated IH shall provide, and the Contractor shall submit, the "Contractor/Supervisor" course completion certificate and the most recent certificate for required refresher training with the employee "Certificate of Worker Acknowledgment" required by this paragraph. The Designated IH shall be completely independent from the Contractor according to federal, state, or local regulations; that is, shall not be a Contractor's employee or be an employee or principal of a firm in a business relationship with the Contractor negating such independent status. A copy of the Designated IH's current valid ABIH certification shall be included. The Designated IH shall visit the site at least once per week for the duration of asbestos activities and shall be available for emergencies. In addition, the Designated IH shall prepare, and the Contractor shall submit, the name, address, telephone numbers and resumes of additional IH's and industrial hygiene technicians (IHT) who will be assisting the Designated IH in performing onsite tasks. IHs and IHTs supporting the Designated IH shall have a minimum of 2 years of practical onsite asbestos abatement experience. The formal reporting relationship between the Designated IH and the support IHs and IHTs, the Designated Competent Person, and the Contractor shall be indicated.

d. Asbestos Abatement Workers: Asbestos abatement workers shall meet the requirements contained in 29 CFR 1926, Section .1101, 40 CFR 61, Subpart M, and other applicable federal, state and local requirements. Worker training documentation shall be provided as required on the "Certificate of Workers Acknowledgment" in this paragraph.

e. Worker Training and Certification of Worker Acknowledgment: Training documentation will be required for each employee who will perform OSHA Class I, Class II, Class III, or Class IV asbestos abatement operations. Such documentation shall be submitted on a Contractor generated form titled "Certificate of Workers Acknowledgment", to be completed for each employee in the same format and containing the same information as the example certificate at the end of this section. Training course completion certificates (initial and most recent update refresher) required by the information checked on the form shall be attached.

f. Physician: The Contractor shall provide the name, medical qualifications, address, telephone number and resume of the physician who will or has performed the medical examinations and evaluations of the persons who will conduct the asbestos abatement work tasks. The physician shall be currently licensed by the state where the workers will be or have been examined, have expertise in pneumoconiosis and shall be responsible for the determination of medical surveillance protocols and for review of examination/test results performed in compliance with 29 CFR 1926, Section .1101 and paragraph MEDICAL REQUIREMENTS. The physician shall be familiar with the site's hazards and the scope of this project.

g. First Aid and CPR Trained Persons: The names of at least 2 persons who are currently trained in first aid and CPR by the American Red Cross or other approved agency shall be designated

and shall be onsite at all times during site operations. They shall be trained in universal precautions and the use of PPE as described in the Bloodborne Pathogens Standard of 29 CFR 1910, Section .1030 and shall be included in the Contractor's Bloodborne Pathogen Program. These persons may perform other duties but shall be immediately available to render first aid when needed. A copy of each designated person's current valid First Aid and CPR certificate shall be provided.

h. Independent Testing Laboratory: The Contractor shall provide the name, address and telephone number of the independent testing laboratory selected to perform the sample analyses and report the results. The testing laboratory shall be completely independent from the Contractor as recognized by federal, state or local regulations. Written verification of the following criteria, signed by the testing laboratory principal and the Contractor, shall be submitted:

(1) Phase contrast microscopy (PCM): The laboratory is fully equipped and proficient in conducting PCM of airborne samples using the methods specified by 29 CFR 1926, Section .1101, OSHA method ID-160, the most current version of NIOSH 84-100 Method 7400, and NIOSH 84-100 Method 7402, transmission electron microscopy (TEM); the laboratory is currently judged proficient (classified as acceptable) in counting airborne asbestos samples by PCM by successful participation in each of the last 4 rounds in the American Industrial Hygiene Association (AIHA) Proficiency Analytical Testing (PAT) Program or the AIHA Asbestos Registry (AAR) if analysis is performed on site.; the names of the selected microscopists who will analyze airborne samples by PCM with verified documentation of their proficiency to conduct PCM analyses by being judged proficient in counting samples as current participating analysts in the AIHA PAT Program, and having successfully completed the Asbestos Sampling and Analysis course (NIOSH 582 or equivalent) with a copy of course completion certificate provided.

(2) Polarized light microscopy (PLM): The laboratory is fully equipped and proficient in conducting PLM analyses of suspect ACM bulk samples in accordance with 40 CFR 763, Subpart E, Appendix E; the laboratory is currently accredited by NIST under the NVLAP for bulk asbestos analysis and will use analysts (names shall be provided) with demonstrated proficiency to conduct PLM to include its application to the identification and quantification of asbestos content.

(3) Transmission electron microscopy (TEM): The laboratory is fully equipped and proficient in conducting TEM analysis of airborne samples using the mandatory method specified by 40 CFR 763, Subpart E, Appendix E; the laboratory is currently accredited by NIST under the NVLAP for airborne sample analysis of asbestos by TEM; the laboratory will use analysts (names shall be provided) that are currently evaluated as competent with demonstrated proficiency under the NIST NVLAP for airborne sample analysis of asbestos by TEM.

(4) PCM/TEM: The laboratory is fully equipped and each analyst (name shall be provided) possesses demonstrated proficiency in conducting PCM and TEM analysis of airborne samples using NIOSH

84-100Method 7400 PCM and NIOSH 84-100 Method 7402 (TEM confirmation of asbestos content of PCM results) from the same filter.

i. Disposal Facility, Transporter: The Contractor shall provide written evidence that the landfill to be used is approved for asbestos disposal by the USEPA and state regulatory agencies. Copies of signed agreements between the Contractor (including subcontractors and transporters) and the asbestos waste disposal facility to accept and dispose of all asbestos containing waste generated during the performance of this contract shall be provided. Qualifications shall be provided for each subcontractor or transporter to be used, indicating previous experience in transport and disposal of asbestos waste to include all required state and local waste hauler requirements for asbestos. The Contractor and transporters shall meet the DOT requirements of 49 CFR 171, 49 CFR 172, and 49 CFR 173 as well as registration requirements of 49 CFR 107 and other applicable state or local requirements. The disposal facility shall meet the requirements of 40 CFR 61, Sections .154 or .155, as required in 40 CFR 61, Section .150(b), and other applicable state or local requirements.

1.5.3 Federal, State or Local Citations on Previous Projects

The Contractor and all subcontractors shall submit a statement, signed by an officer of the company, containing a record of any citations issued by Federal, State or local regulatory agencies relating to asbestos activities (including projects, dates, and resolutions); a list of penalties incurred through non-compliance with asbestos project specifications, including liquidated damages, overruns in scheduled time limitations and resolutions; and situations in which an asbestos-related contract has been terminated (including projects, dates, and reasons for terminations). If there are none, a negative declaration signed by an officer of the company shall be provided.

1.6 REGULATORY REQUIREMENTS

In addition to detailed requirements of this specification, work performed under this contract shall comply with EM 385-1-1, applicable federal, state, and local laws, ordinances, criteria, rules and regulations regarding handling, storing, transporting, and disposing of asbestos waste materials. This includes, but is not limited to, OSHA standards, 29 CFR 1926, especially Section .1101, 40 CFR 61, Subpart M and 40 CFR 763. Matters of interpretation of standards shall be submitted to the appropriate administrative agency for resolution before starting work. Where the requirements of this specification, applicable laws, criteria, ordinances, regulations, and referenced documents vary, the most stringent requirements shall apply. The following state and local laws, rules and regulations regarding demolition, removal, encapsulation, construction alteration, repair, maintenance, renovation, spill/emergency cleanup, housekeeping, handling, storing, transporting and disposing of asbestos material apply: North Carolina Asbestos Hazard Management Program rules 10A NCAC 41C.0600..

1.7 SAFETY AND HEALTH PROGRAM AND PLANS

The Contractor shall develop and submit a written comprehensive site-specific Accident Prevention Plan at least 30 days prior to the preconstruction conference. The Accident Prevention Plan shall address

requirements of EM 385-1-1, Appendix A, covering onsite work to be performed by the Contractor and subcontractors. The Accident Prevention Plan shall incorporate an Asbestos Hazard Abatement Plan, and Activity Hazard Analyses as separate appendices into 1 site specific Accident Prevention Plan document. Any portions of the Contractor's overall Safety and Health Program that are referenced in the Accident Prevention Plan, e.g., respirator program, hazard communication program, confined space entry program, etc., shall be included as appendices to the Accident Prevention Plan. The plan shall take into consideration all the individual asbestos abatement work tasks identified in Table 1. The plan shall be prepared, signed (and sealed, including certification number if required), and dated by the Contractor's Designated IH, Competent Person, and Project Supervisor.

1.7.1 Asbestos Hazard Abatement Plan Appendix

The Asbestos Hazard Abatement Plan appendix to the Accident Prevention Plan shall include, but not be limited to, the following:

a. The personal protective equipment to be used;

b. The location and description of regulated areas including clean and dirty areas,access tunnels, and decontamination unit (clean room, shower room, equipment room, storage areas such as load-out unit);

c. Initial exposure assessment in accordance with 29 CFR 1926, Section .1101;

d. Level of supervision;

e. Method of notification of other employers at the worksite;

f. Abatement method to include containment and control procedures;

g. Interface of trades involved in the construction;

h. Sequencing of asbestos related work;

i. Storage and disposal procedures and plan;

j. Type of wetting agent and asbestos encapsulant to be used;

k. Location of local exhaust equipment;

l. Air monitoring methods (personal, environmental and clearance);

m. Bulk sampling and analytical methods (if required);

n. A detailed description of the method to be employed in order to control the spread of ACM wastes and airborne fiber concentrations;

o. Fire and medical emergency response procedures;

p. The security procedures to be used for all regulated areas.

1.7.2 Activity Hazard Analyses Appendix

Activity Hazard Analyses, for each major phase of work, shall be submitted

and updated during the project. The Activity Hazard Analyses format shall be in accordance with EM 385-1-1 (Figure 1-1). The analysis shall define the activities to be performed for a major phase of work, identify the sequence of work, the specific hazards anticipated, and the control measures to be implemented to eliminate or reduce each hazard to an acceptable level. Work shall not proceed on that phase until the Activity Hazard Analyses has been accepted and a preparatory meeting has been conducted by the Contractor to discuss its contents with everyone engaged in the activities, including the onsite Government representatives. The Activity Hazard Analyses shall be continuously reviewed and, when appropriate, modified to address changing site conditions or operations.

1.8 PRECONSTRUCTION CONFERENCE AND ONSITE SAFETY

The Contractor and the Contractor's Designated Competent Person, Project Supervisor, and Designated IH shall meet with the Contracting Officer prior to beginning work at a safety preconstruction conference to discuss the details of the Contractor's submitted Accident Prevention Plan to include the Asbestos Hazard Abatement Plan and Activity Hazard Analyses appendices. Deficiencies in the Accident Prevention Plan will be discussed and the Accident Prevention Plan shall be revised to correct the deficiencies and resubmitted for acceptance. Any changes required in the specification as a result of the Accident Prevention Plan shall be identified specifically in the plan to allow for free discussion and acceptance by the Contracting Officer, prior to the start of work. Onsite work shall not begin until the Accident Prevention Plan has been accepted. A copy of the written Accident Prevention Plan shall be maintained onsite. Changes and modifications to the accepted Accident Prevention Plan shall be made with the knowledge and concurrence of the Designated IH, the Project Supervisor, Designated Competent Person, and the Contracting Officer. Should any unforeseen hazard become evident during the performance of the work, the Designated IH shall bring such hazard to the attention of the Project Supervisor, Designated Competent Person, and the Contracting Officer, both verbally and in writing, for resolution as soon as possible. In the interim, all necessary action shall be taken by the Contractor to restore and maintain safe working conditions in order to safeguard onsite personnel, visitors, the public, and the environment. Once accepted by the Contracting Officer, the Accident Prevention Plan, including the Asbestos Hazard Abatement Plan and Activity Hazard Analyses will be enforced as if an addition to the contract. Disregarding the provisions of this contract or the accepted Accident Prevention Plan will be cause for stopping of work, at the discretion of the Contracting Officer, until the matter has been rectified.

1.9 SECURITY

Controlled access shall be provided for each regulated area. A log book shall be kept documenting entry into and out of the regulated area. Entry into regulated areas shall only be by personnel authorized by the Contractor and the Contracting Officer. Personnel authorized to enter regulated areas shall be trained, be medically evaluated, and wear the required personal protective equipment for the specific regulated area to be entered.

1.10 MEDICAL REQUIREMENTS

Medical requirements shall conform to 29 CFR 1926, Section .1101.

1.10.1 Medical Examinations

Before being exposed to airborne asbestos fibers, workers shall be provided with a medical examination as required by 29 CFR 1926, Section .1101 and other pertinent state or local requirements. This requirement shall have been satisfied within the last 12 months. The same medical examination shall be given on an annual basis to employees engaged in an occupation involving asbestos and within 30 calendar days before or after the termination of employment in such occupation. X-ray films of asbestos workers shall be identified to the consulting radiologist and medical record jackets shall be marked with the word "asbestos."

1.10.1.1 Information Provided to the Physician

The Contractor shall provide the following information in writing to the examining physician:

a. A copy of 29 CFR 1926, Section .1101 and Appendices D, E, G, and I;

b. A description of the affected employee's duties as they relate to the employee's exposure;

c. The employee's representative exposure level or anticipated exposure level;

d. A description of any personal protective and respiratory equipment used or to be used;

e. Information from previous medical examinations of the affected employee that is not otherwise available to the examining physician.

1.10.1.2 Written Medical Opinion

For each worker, a written medical opinion prepared and signed by a licensed physician indicating the following:

a. Summary of the results of the examination.

b. The potential for an existing physiological condition that would place the employee at an increased risk of health impairment from exposure to asbestos.

c. The ability of the individual to wear personal protective equipment, including respirators, while performing strenuous work tasks under cold and/or heat stress conditions.

d. A statement that the employee has been informed of the results of the examination, provided with a copy of the results, informed of the increased risk of lung cancer attributable to the combined effect of smoking and asbestos exposure, and informed of any medical condition that may result from asbestos exposure.

1.10.2 Medical and Exposure Records

Complete and accurate records shall be maintained of each employee's medical examinations, medical records, and exposure data, as required by 29 CFR 1910, Section .1910.20 and 29 CFR 1926, Section .1101 for a period of 50 years after termination of employment. Records of the required medical

examinations and exposure data shall be made available, for inspection and copying, to the Assistant Secretary of Labor for Occupational Safety and Health (OSHA) or authorized representatives of the employee and an employee's physician upon request of the employee or former employee. A copy of the required medical certification for each employee shall be maintained on file at the worksite for review, as requested by the Contracting Officer or the representatives.

1.11 TRAINING PROGRAM

1.11.1 General Training Requirements

The Contractor shall establish a training program as specified by EPA Model Accreditation Plan (MAP), training requirements at 40 CFR 763, Subpart E, Appendix C, the State of North Carolina 10A NCAC 41C.0600, OSHA requirements at 29 CFR 1926, Section .1101(k)(9), and this specification. Contractor employees shall complete the required training for the type of work they are to perform and such training shall be documented and provided to the Contracting Officer as specified in paragraph QUALIFICATIONS.

1.11.2 Project Specific Training

Prior to commencement of work, each worker shall be instructed by the Contractor's Designated IH and Competent Person in the following project specific training:

a. The hazards and health effects of the specific types of ACM to be abated;

b. The content and requirements of the Contractor's Accident Prevention Plan to include the Asbestos Hazard Abatement Plan and Activity Hazard Analyses and site-specific safety and health precautions;

c. Hazard Communication Program;

d. Hands-on training for each asbestos abatement technique to be employed;

e. Heat and/or cold stress monitoring specific to this project;

f. Air monitoring program and procedures;

g. Medical surveillance to include medical and exposure record-keeping procedures;

h. The association of cigarette smoke and asbestos-related disease;

i. Security procedures;

j. Specific work practice controls and engineering controls required for each Class of work in accordance with 29 CFR 1926, Section .1101.

1.12 RESPIRATORY PROTECTION PROGRAM

The Contractor's Designated IH shall establish in writing, and implement a respiratory protection program in accordance with 29 CFR 1926, Section .1101, 29 CFR 1910, Section .134, ANSI Z88.2, CGA G-7, CGA G-7.1 and DETAIL SHEET 12. The Contractor's Designated IH shall establish minimum respiratory

protection requirements based on measured or anticipated levels of airborne asbestos fiber concentrations encountered during the performance of the asbestos abatement work. The Contractor's respiratory protection program shall include, but not be limited to, the following elements:

a. The company policy, used for the assignment of individual responsibility, accountability, and implementation of the respiratory protection program.

b. The standard operating procedures covering the selection and use of respirators. Respiratory selection shall be determined by the hazard to which the worker is exposed.

c. Medical evaluation of each user to verify that the worker may be assigned to an activity where respiratory protection is required.

d. Training in the proper use and limitations of respirators.

e. Respirator fit-testing, i.e., quantitative, qualitative and individual functional fit checks.

f. Regular cleaning and disinfection of respirators.

g. Routine inspection of respirators during cleaning and after each use when designated for emergency use.

h. Storage of respirators in convenient, clean, and sanitary locations.

i. Surveillance of regulated area conditions and degree of employee exposure (e.g., through air monitoring).

j. Regular evaluation of the continued effectiveness of the respiratory protection program.

k. Recognition and procedures for the resolution of special problems as they affect respirator use (e.g., no facial hair that comes between the respirator face piece and face or interferes with valve function; prescription eye wear usage; contact lenses usage; etc.).

l. Proper training in putting on and removing respirators.

1.12.1 Respiratory Fit Testing

A qualitative or quantitative fit test conforming to 29 CFR 1926, Section 1101, Appendix C shall be conducted by the Contractor's Designated IH for each Contractor worker required to wear a respirator, and for the Contracting Officer and authorized visitors who enter a regulated area where respirators are required to be worn. A respirator fit test shall be performed for each worker wearing a negative-pressure respirator prior to initially wearing a respirator on this project and every 6 months thereafter. The qualitative fit tests may be used only for testing the fit of half-mask respirators where they are permitted to be worn, or of full-facepiece air purifying respirators where they are worn at levels at which half-facepiece air purifying respirators are permitted. If physical changes develop that will affect the fit, a new fit test for the worker shall be performed. Functional fit checks shall be performed by employees each time a respirator is put on and in accordance with the manufacturer's

recommendation.

1.12.2 Respirator Selection and Use Requirements

The Contractor shall provide respirators, and ensure that they are used as required by 29 CFR 1926, Section .1101 and in accordance with the manufacturer's recommendations. Respirators shall be jointly approved by the Mine Safety and Health Administration and the National Institute for Occupational Safety and Health (MSHA/NIOSH), or by NIOSH, under the provisions of 42 CFR 84, for use in environments containing airborne asbestos fibers. Personnel who handle ACM, enter regulated areas that require the wearing of a respirator, or who are otherwise carrying out abatement activities that require the wearing of a respirator, shall be provided with approved respirators that are fully protective of the worker at the measured or anticipated airborne asbestos concentration level to be encountered. For air-purifying respirators, the particulate filter portion of the cartridges or canister approved for use in airborne asbestos environments shall be high-efficiency particulate air (HEPA). The initial respirator selection and the decisions regarding the upgrading or downgrading of respirator type shall be made by the Contractor's Designated IH based on the measured or anticipated airborne asbestos fiber concentrations to be encountered. Recommendations made by the Contractor's Designated IH to downgrade respirator type shall be submitted in writing to the Contracting Officer. The Contractor's Designated Competent Person in consultation with the Designated IH, shall have the authority to take immediate action to upgrade or downgrade respiratory type when there is an immediate danger to the health and safety of the wearer. Respirators shall be used in the following circumstances:

a. During all Class I asbestos jobs.

b. During all Class II work where the ACM is not removed in a substantially intact state.

c. During all Class II and III work which is not performed using wet methods. Respirators need not be worn during removal of ACM from sloped roofs when a negative exposure assessment has been made and ACM is removed in an intact state.

d. During all Class II and III asbestos jobs where the Contractor does not produce a negative exposure assessment.

e. During all Class III jobs where TSI or surfacing ACM is being disturbed.

f. During all Class IV work performed within regulated areas where employees performing other work are required to wear respirators.

g. During all work where employees are exposed above the PEL-TWA or PEL-Excursion Limit.

h. In emergencies

1.12.3 Class I Work

The Contractor shall provide: (1) a tight-fitting, powered air purifying respirator equipped with high efficiency filters, or (2) a full-facepiece supplied air respirator operated in the pressure demand mode, equipped with HEPA egress cartridges, or (3) an auxiliary positive pressure

self-contained breathing apparatus, for all employees within the regulated area where Class I work is being performed; provided that a negative exposure assessment has not been produced, and that the exposure level will not exceed 1 f/cc as an 8-hour time weighted average. A full-facepiece supplied air respirator, operated in the pressure demand mode, equipped with an auxiliary positive pressure self-contained breathing apparatus shall be provided under such conditions, if the exposure assessment indicates exposure levels above 1 f/cc as an 8-hour time weighted average.

1.12.4 Class II and III Work

The Contractor shall provide an air purifying respirator, other than a disposable respirator, equipped with high-efficiency filters whenever the employee performs Class II and III asbestos jobs where the Contractor does not produce a negative exposure assessment ; and Class III jobs where TSI or surfacing ACM is being disturbed.

1.12.5 Sanitation

Employees who wear respirators shall be permitted to leave work areas to wash their faces and respirator facepieces whenever necessary to prevent skin irritation associated with respirator use.

1.13 HAZARD COMMUNICATION PROGRAM

A hazard communication program shall be established and implemented in accordance with 29 CFR 1926, Section .59. Material safety data sheets (MSDSs) shall be provided for all hazardous materials brought onto the worksite. One copy shall be provided to the Contracting Officer and 1 copy shall be included in the Contractor's Hazard Communication Program.

1.14 LICENSES, PERMITS AND NOTIFICATIONS

1.14.1 General Legal Requirements

Necessary licenses, permits and notifications shall be obtained in conjunction with the project's asbestos abatement, transportation and disposal actions and timely notification furnished of such actions as required by federal, state, regional, and local authorities. The Contractor shall notify the state's environmental protection agency responsible for asbestos air emissions state OSHA program and the Contracting Officer in writing, at least 10 days prior to the commencement of work, in accordance with 40 CFR 61, Subpart M, and state and local requirements to include the mandatory "Notification of Demolition and Renovation Record" form and other required notification documents. Notification shall be by Certified Mail, Return Receipt Requested. The Contractor shall furnish copies of the receipts to the Contracting Officer, in writing, prior to the commencement of work. A copy of the rental company's written acknowledgment and agreement shall be provided as required by paragraph RENTAL EQUIPMENT. For licenses, permits, and notifications that the Contractor is responsible for obtaining, the Contractor shall pay any associated fees or other costs incurred.

1.14.2 Litigation and Notification

The Contractor shall notify the Contracting Officer if any of the following occur:

a. The Contractor or any of the subcontractors are served with notice

of violation of any law, regulation, permit or license which relates to this contract;

b. Proceedings are commenced which could lead to revocation of related permits or licenses; permits, licenses or other Government authorizations relating to this contract are revoked;

c. Litigation is commenced which would affect this contract;

d. The Contractor or any of the subcontractors become aware that their equipment or facilities are not in compliance or may fail to comply in the future with applicable laws or regulations.

1.15 PERSONAL PROTECTIVE EQUIPMENT

Two complete sets of personal protective equipment shall be made available to the Contracting Officer and authorized visitors for entry to the regulated area. Contracting Officer and authorized visitors shall be provided with training equivalent to that provided to Contractor employees in the selection, fitting, and use of the required personal protective equipment and the site safety and health requirements. Contractor workers shall be provided with personal protective clothing and equipment and the Contractor shall ensure that it is worn properly. The Contractor's Designated IH and Designated Competent Person shall select and approve all the required personal protective clothing and equipment to be used.

1.15.1 Respirators

Respirators shall be in accordance with paragraph RESPIRATORY PROTECTION PROGRAM.

1.15.2 Whole Body Protection

Personnel exposed to airborne concentrations of asbestos that exceed the PELs, or for all OSHA Classes of work for which a required negative exposure assessment is not produced, shall be provided with whole body protection and such protection shall be worn properly. The Contractor's Designated IH and Competent Person shall select and approve the whole body protection to be used. The Competent Person shall examine work suits worn by employees at least once per work shift for rips or tears that may occur during performance of work. When rips or tears are detected while an employee is working, rips and tears shall be immediately mended, or the work suit shall be immediately replaced. Disposable whole body protection shall be disposed of as asbestos contaminated waste upon exiting from the regulated area. Reusable whole body protection worn shall be either disposed of as asbestos contaminated waste upon exiting from the regulated area or be properly laundered in accordance with 29 CFR 1926, Section .1101. Whole body protection used for asbestos abatement shall not be removed from the worksite by a worker to be cleaned. Recommendations made by the Contractor's Designated IH to downgrade whole body protection shall be submitted in writing to the Contracting Officer. The Contractor's Designated Competent Person, in consultation with the Designated IH, has the authority to take immediate action to upgrade or downgrade whole body protection when there is an immediate danger to the health and safety of the wearer.

1.15.2.1 Coveralls

Disposable-breathable coveralls with a zipper front shall be provided.

Sleeves shall be secured at the wrists, and foot coverings secured at the ankles. See DETAIL SHEET 13.

1.15.2.2 Underwear

Disposable underwear shall be provided. If reusable underwear are used, they shall be disposed of as asbestos contaminated waste or laundered in accordance with 29 CFR 1926, Section .1101. Asbestos abatement workers shall not remove contaminated reusable underwear worn during abatement of ACM from the site to be laundered.

1.15.2.3 Work Clothing

An additional coverall shall be provided when the abatement and control method employed does not provide for the exit from the regulated area directly into an attached decontamination unit. Cloth work clothes for wear under the protective coverall, and foot coverings, shall be provided when work is being conducted in low temperature conditions. Cloth work clothes shall be either disposed of as asbestos contaminated waste or properly laundered in accordance with 29 CFR 1926, Section .1101.

1.15.2.4 Gloves

Gloves shall be provided to protect the hands. Where there is the potential for hand injuries (i.e., scrapes, punctures, cuts, etc.) a suitable glove shall be provided and used.

1.15.2.5 Foot Coverings

Cloth socks shall be provided and worn next to the skin. Footwear, as required by OSHA and EM 385-1-1, that is appropriate for safety and health hazards in the area shall be worn. Rubber boots shall be used in moist or wet areas. Reusable footwear removed from the regulated area shall be thoroughly decontaminated or disposed of as ACM waste. Disposable protective foot covering shall be disposed of as ACM waste. If rubber boots are not used, disposable foot covering shall be provided.

1.15.2.6 Head Covering

Hood type disposable head covering shall be provided. In addition, protective head gear (hard hats) shall be provided as required. Hard hats shall only be removed from the regulated area after being thoroughly decontaminated.

1.15.2.7 Protective Eye Wear

Eye protection provided shall be in accordance with ANSI Z87.1.

1.16 HYGIENE FACILITIES AND PRACTICES

The Contractor shall establish a decontamination area for the decontamination of employees, material and equipment. The Contractor shall ensure that employees enter and exit the regulated area through the decontamination area.

1.16.1 Shower Facilities

Shower facilities, when provided, shall comply with 29 CFR 1910, Section .141(d)(3).

1.16.2 3-Stage Decontamination Area

Utilization of prefabricated units shall have prior approval of the Contracting Officer. The decontamination unit shall have an equipment room and a clean room separated by a shower that complies with 29 CFR 1910, Section .141 (unless the Contractor can demonstrate that such facilities are not feasible). Equipment and surfaces of containers filled with ACM shall be cleaned prior to removing them from the equipment room or area. Surfaces of the equipment room shall be wet wiped 2 times after each shift. Materials used for wet wiping shall be disposed of as asbestos contaminated waste. Hot water service may be secured from the building hot water system provided backflow protection is installed by the Contractor at the point of connection. Should sufficient hot water be unavailable, the Contractor shall provide a minimum 40 gal. electric water heater with minimum recovery rate of 20 gal. per hour and a temperature controller for each showerhead. The Contractor shall provide a minimum of one shower. Instantaneous type in-line water heater may be incorporated at each shower head in lieu of hot water heater, upon approval by the Contracting Officer. Flow and temperature controls shall be located within the shower and shall be adjustable by the user. The wastewater pump shall be sized for 1.25 times the showerhead flow-rate at a pressure head sufficient to satisfy the filter head loss and discharge line losses. The pump shall supply a minimum 25 gpm flow with 35 ft. of pressure head. Used shower water shall be collected and filtered to remove asbestos contamination. Filters and residue shall be disposed of as asbestos contaminated material, per DETAIL SHEETS 9 and 14. Filtered water shall be discharged to the sanitary system. Wastewater filters shall be installed in series with the first stage pore size of 20 microns and the second stage pore size of 5 microns. The floor of the decontamination unit's clean room shall be kept dry and clean at all times. Water from the shower shall not be allowed to wet the floor in the clean room. Surfaces of the clean room and shower shall be wet-wiped 2 times after each shift change with a disinfectant solution. Proper housekeeping and hygiene requirements shall be maintained. Soap and towels shall be provided for showering, washing and drying. Any cloth towels provided shall be disposed of as ACM waste or shall be laundered in accordance with 29 CFR 1926, Section .1101.

1.16.3 Load-Out Unit

A temporary load-out unit that is adjacent and connected to the regulated area shall be provided as described in DETAIL SHEET Number 20. Utilization of prefabricated units shall have prior approval of the Contracting Officer. The load-out unit shall be attached in a leak-tight manner to each regulated area. Surfaces of the load-out unit shall be adequately wet-wiped 2 times after each shift change. Materials used for wet wiping shall be disposed of as asbestos contaminated waste.

1.16.4 Single Stage Decontamination Area

A decontamination area (equipment room/area) shall be provided for Class I work involving less than 25 feet or 10 square feet of TSI or surfacing ACM, and for Class II and Class III asbestos work operations where exposures exceed the PELs or where there is no negative exposure assessment produced before the operation. The equipment room or area shall be adjacent to the regulated area for the decontamination of employees, material, and their equipment which is contaminated with asbestos. The equipment room or area shall consist of an area covered by an impermeable drop cloth on the floor or horizontal working surface. The area must be of sufficient size to accommodate cleaning of equipment and removing personal

protective equipment without spreading contamination beyond the area. Surfaces of the equipment room shall be wet wiped 2 times after each shift. Materials used for wet wiping shall be disposed of as asbestos contaminated waste.

1.16.5 Decontamination Requirements for Class IV Work

The Contractor shall ensure that employees performing Class IV work within a regulated area comply with the hygiene practice required of employees performing work which has a higher classification within that regulated area, or the Contractor shall provide alternate decontamination area facilities for employees cleaning up debris and material which is TSI or surfacing ACM.

1.16.6 Decontamination Area Entry Procedures

The Contractor shall ensure that employees entering the decontamination area through the clean room or clean area:

a. Remove street clothing in the clean room or clean area and deposit it in lockers.

b. Put on protective clothing and respiratory protection before leaving the clean room or clean area.

c. Pass through the equipment room to enter the regulated area.

1.16.7 Decontamination Area Exit Procedures

The Contractor shall ensure that the following procedures are followed:

a. Before leaving the regulated area, respirators shall be worn while employees remove all gross contamination and debris from their work clothing using a HEPA vacuum.

b. Employees shall remove their protective clothing in the equipment room and deposit the clothing in labeled impermeable bags or containers (see Detail Sheets 9 and 14) for disposal and/or laundering.

c. Employees shall not remove their respirators in the equipment room.

d. Employees shall shower prior to entering the clean room. If a shower has not been located between the equipment room and the clean room or the work is performed outdoors, the Contractor shall ensure that employees engaged in Class I asbestos jobs: a) Remove asbestos contamination from their work suits in the equipment room or decontamination area using a HEPA vacuum before proceeding to a shower that is not adjacent to the work area; or b) Remove their contaminated work suits in the equipment room, without cleaning worksuits, and proceed to a shower that is not adjacent to the work area.

e. After showering, employees shall enter the clean room before changing into street clothes.

1.16.8 Lunch Areas

The Contractor shall provide lunch areas in which the airborne

concentrations of asbestos are below 0.01 f/cc.

1.16.9 Smoking

Smoking, if allowed by the Contractor, shall only be permitted in designated areas approved by the Contracting Officer.

1.17 REGULATED AREAS

All Class I, II, and III asbestos work shall be conducted within regulated areas. The regulated area shall be demarcated to minimize the number of persons within the area and to protect persons outside the area from exposure to airborne asbestos. Where critical barriers or negative pressure enclosures are used, they shall demarcate the regulated area. Access to regulated areas shall be limited to authorized persons. The Contractor shall control access to regulated areas, ensure that only authorized personnel enter, and verify that Contractor required medical surveillance, training and respiratory protection program requirements are met prior to allowing entrance.

1.18 WARNING SIGNS AND TAPE

Warning signs and tape printed bilingually in English and Spanish and in pictographs and graphics shall be provided at the regulated boundaries and entrances to regulated areas. The Contractor shall ensure that all personnel working in areas contiguous to regulated areas comprehend the warning signs. Signs shall be located to allow personnel to read the signs and take the necessary protective steps required before entering the area. Warning signs, as shown and described in DETAIL SHEET 11, shall be in vertical format conforming to 29 CFR 1910 and 29 CFR 1926, Section .1101, a minimum of 20 by 14 inches, and displaying the following legend in the lower panel:

DANGER
ASBESTOS
CANCER AND LUNG DISEASE HAZARD
AUTHORIZED PERSONNEL ONLY
RESPIRATORS AND PROTECTIVE CLOTHING ARE REQUIRED IN THIS AREA

Spacing between lines shall be at least equal to the height of the upper of any two lines. Warning tape shall be provided as shown and described on DETAIL SHEET 11. Decontamination unit signage shall be as shown and described on DETAIL SHEET 15.

1.19 WARNING LABELS

Warning labels shall be affixed to all asbestos disposal containers used to contain asbestos materials, scrap, waste debris, and other products contaminated with asbestos. Containers with preprinted warning labels conforming to requirements are acceptable. Warning labels shall be as described in DETAIL SHEET 14, shall conform to 29 CFR 1926, Section .1101 and shall be of sufficient size to be clearly legible displaying the following legend:

DANGER
CONTAINS ASBESTOS FIBERS
AVOID CREATING DUST
CANCER AND LUNG DISEASE HAZARD

1.20 LOCAL EXHAUST VENTILATION

Local exhaust ventilation units shall conform to ANSI Z9.2 and 29 CFR 1926, Section .1101. Filters on local exhaust system equipment shall conform to ANSI Z9.2 and UL 586. Filter shall be UL labeled.

1.21 TOOLS

Vacuums shall be leak proof to the filter, equipped with HEPA filters, of sufficient capacity and necessary capture velocity at the nozzle or nozzle attachment to efficiently collect, transport and retain the ACM waste material. Power tools shall not be used to remove ACM unless the tool is equipped with effective, integral HEPA filtered exhaust ventilation capture and collection system, or has otherwise been approved for use by the Contracting Officer. Residual asbestos shall be removed from reusable tools prior to storage and reuse. Reusable tools shall be thoroughly decontaminated prior to being removed from regulated areas.

1.22 RENTAL EQUIPMENT

If rental equipment is to be used, written notification shall be provided to the rental agency, concerning the intended use of the equipment, the possibility of asbestos contamination of the equipment and the steps that will be taken to decontaminate such equipment. A written acceptance of the terms of the Contractor's notification shall be obtained from the rental agency.

1.23 AIR MONITORING EQUIPMENT

The Contractor's Designated IH shall approve air monitoring equipment to be used to collect samples. The equipment shall include, but shall not be limited to:

a. High-volume sampling pumps that can be calibrated and operated at a constant airflow up to 16 liters per minute when equipped with a sampling train of tubing and filter cassette.

b. Low-volume, battery powered, body-attachable, portable personal pumps that can be calibrated to a constant airflow up to approximately 3.5 liters per minute when equipped with a sampling train of tubing and filter cassette, and a self-contained rechargeable power pack capable of sustaining the calibrated flow rate for a minimum of 10 hours. The pumps shall also be equipped with an automatic flow control unit which shall maintain a constant flow, even as filter resistance increases due to accumulation of fiber and debris on the filter surface.

c. Single use standard 25 mm diameter cassette, open face, 0.8 micron pore size, mixed cellulose ester membrane filters and cassettes with 50 mm electrically conductive extension cowl, and shrink bands, to be used with low flow pumps in accordance with 29 CFR 1926, Section .1101 for personal air sampling.

d. Single use standard 25 mm diameter cassette, open face, 0.45 micron pore size, mixed cellulose ester membrane filters and cassettes with 50 mm electrically conductive cowl, and shrink bands, to be used with high flow pumps when conducting environmental area sampling using NIOSH 84-100 Methods 7400 and 7402, (and the transmission electric microscopy method specified

at 40 CFR 763 if required).

e. Appropriate plastic tubing to connect the air sampling pump to the selected filter cassette.

f. A flow calibrator capable of calibration to within plus or minus 2 percent of reading over a temperature range of minus 4 to plus 140 degrees F and traceable to a NIST primary standard.

1.24 EXPENDABLE SUPPLIES

1.24.1 Glovebag

Glovebags shall be provided as described in 29 CFR 1926, Section .1101 and SET-UP DETAIL SHEET 10. The glovebag assembly shall be 6 mil thick plastic, prefabricated and seamless at the bottom with preprinted OSHA warning label.

1.24.2 Duct Tape

Industrial grade duct tape of appropriate widths suitable for bonding sheet plastic and disposal container shall be provided.

1.24.3 Disposal Containers

Leak-tight (defined as solids, liquids, or dust that cannot escape or spill out) disposal containers shall be provided for ACM wastes as required by 29 CFR 1926 Section .1101 and DETAIL SHEETS 9A, 9B, and 14.

1.24.4 Disposal Bags

Leak-tight bags, 6 mil thick, shall be provided for placement of asbestos generated waste as described in DETAIL SHEET 9A.

1.24.5 Sheet Plastic

Sheet plastic shall be polyethylene of 6 mil minimum thickness and shall be provided in the largest sheet size necessary to minimize seams ,as indicated on the project drawings. Film shall be clear or frosted and conform to ASTM D 4397, except as specified below:

1.24.5.1 Flame Resistant

Where a potential for fire exists, flame-resistant sheets shall be provided. Film shall be frosted and shall conform to the requirements of NFPA 701.

1.24.5.2 Reinforced

Reinforced sheets shall be provided where high skin strength is required, such as where it constitutes the only barrier between the regulated area and the outdoor environment. The sheet stock shall consist of translucent, nylon-reinforced or woven-polyethylene thread laminated between 2 layers of polyethylene film. Film shall meet flame resistant standards of NFPA 701.

1.24.6 Amended Water

Amended water shall meet the requirements of ASTM D 1331.

1.24.7 Mastic Removing Solvent

Mastic removing solvent shall be nonflammable and shall not contain methylene chloride, glycol ether, or halogenated hydrocarbons. Solvents used onsite shall have a flash point greater than 140 degrees F.

1.24.8 Leak-tight Wrapping

Two layers of 6 mil minimum thick polyethylene sheet stock shall be used for the containment of removed asbestos-containing components or materials such as reactor vessels, large tanks, boilers, insulated pipe segments and other materials too large to be placed in disposal bags as described in DETAIL SHEET 9B. Upon placement of the ACM component or material, each layer shall be individually leak-tight sealed with duct tape.

1.24.9 Viewing Inspection Window

Where feasible, a minimum of 1 clear, 1/8 inch thick, acrylic sheet, 18 by 24 inches, shall be installed as a viewing inspection window at eye level on a wall in each containment enclosure. The windows shall be sealed leak-tight with industrial grade duct tape.

1.24.10 Wetting Agents

Removal encapsulant (a penetrating encapsulant) shall be provided when conducting removal abatement activities that require a longer removal time or are subject to rapid evaporation of amended water. The removal encapsulant shall be capable of wetting the ACM and retarding fiber release during disturbance of the ACM greater than or equal to that provided by amended water. Performance requirements for penetrating encapsulants are specified in paragraph ENCAPSULANTS.

1.25 MISCELLANEOUS ITEMS

A sufficient quantity of other items, such as, but not limited to: scrapers, brushes, brooms, staple guns, tarpaulins, shovels, rubber squeegees, dust pans, other tools, scaffolding, staging, enclosed chutes, wooden ladders, lumber necessary for the construction of containments, UL approved temporary electrical equipment, material and cords, ground fault circuit interrupters, water hoses of sufficient length, fire extinguishers, first aid kits, portable toilets, logbooks, log forms, markers with indelible ink, spray paint in bright color to mark areas, project boundary fencing, etc., shall be provided.

PART 2 PRODUCTS

2.1 ENCAPSULANTS

Encapsulants shall conform to USEPA requirements, shall contain no toxic or hazardous substances and no solvent and shall meet the following requirements:

ALL ENCAPSULANTS

Requirement	Test Standard
Flame Spread - 25, Smoke Emission - 50	ASTM E 84
Combustion Toxicity	Univ. of Pittsburgh Protocol

ALL ENCAPSULANTS

Requirement	Test Standard
Zero Mortality	
Life Expectancy, 20 yrs	ASTM C 732
Accelerated Aging Test	
Permeability, Minimum	ASTM E 96
0.4 perms	

Additional Requirements for Bridging Encapsulant

Requirement	Test Standard
Cohesion/Adhesion Test,	ASTM E 736
50 pounds of force/foot	
Fire Resistance, Negligible	ASTM E 119
affect on fire resistance	
rating over 3 hour test (Classified	
by UL for use over fibrous and	
cementitious sprayed fireproofing)	
Impact Resistance, Minimum	ASTM D 2794
43 in-lb (Gardner Impact Test)	
Flexibility, no rupture or	ASTM D 522
cracking (Mandrel Bend Test)	

Additional Requirements for Penetrating Encapsulant

Requirement	Test Standard
Cohesion/Adhesion Test,	ASTM E 736
50 pounds of force/foot	
Fire Resistance, Negligible	ASTM E 119
affect on fire resistance	
rating over 3 hour test(Classified	
by UL for use over fibrous and	
cementitious sprayed fireproofing)	
Impact Resistance, Minimum	ASTM D 2794
43 in-lb (Gardner Impact Test)	
Flexibility, no rupture or	ASTM D 522
cracking (Mandrel Bend Test)	

Additional Requirements for Lockdown Encapsulant

Requirement	Test Standard
Fire Resistance, Negligible	ASTM E 119
affect on fire resistance	
rating over 3 hour test(Tested	
with fireproofing over encapsulant	
applied directly to steel member)	
Bond Strength, 100 pounds of	ASTM E 736
force/foot (Tests	
compatibility with cementitious	
and fibrous fireproofing)	

2.2 RECYCLABLE MATERIALS

The Contractor shall comply with EPA requirements in accordance with

Section 01670 RECYCLED / RECOVERED MATERIALS.

PART 3 EXECUTION

3.1 GENERAL REQUIREMENTS

Asbestos abatement work tasks shall be performed as shown on the detailed plans and drawings, as summarized in paragraph DESCRIPTION OF WORK and including Table 1 and the Contractor's Accident Prevention Plan, Asbestos Hazard Abatement Plan, and the Activity Hazard Analyses. The Contractor shall use the engineering controls and work practices required in 29 CFR 1926, Section .1101(g) in all operations regardless of the levels of exposure. Personnel shall wear and utilize protective clothing and equipment as specified. The Contractor shall not permit eating, smoking, drinking, chewing or applying cosmetics in the regulated area. All hot work (burning, cutting, welding, etc.) shall be conducted under controlled conditions in conformance with 29 CFR 1926, Section .352, Fire Prevention. Personnel of other trades, not engaged in asbestos abatement activities, shall not be exposed at any time to airborne concentrations of asbestos unless all the administrative and personal protective provisions of the Contractor's Accident Prevention Plan are complied with. Power to the regulated area shall be locked-out and tagged in accordance with 29 CFR 1910, and temporary electrical service with ground fault circuit interrupters shall be provided as needed. Temporary electrical service shall be disconnected when necessary for wet removal. The Contractor shall stop abatement work in the regulated area immediately when the airborne total fiber concentration: (1) equals or exceeds 0.01 f/cc, or the pre-abatement concentration, whichever is greater, outside the regulated area; or (2) equals or exceeds 1.0 f/cc inside the regulated area. The Contractor shall correct the condition to the satisfaction of the Contracting Officer, including visual inspection and air sampling. Work shall resume only upon notification by the Contracting Officer. Corrective actions shall be documented.

3.2 PROTECTION OF ADJACENT WORK OR AREAS TO REMAIN

Asbestos abatement shall be performed without damage to or contamination of adjacent work or area. Where such work or area is damaged or contaminated, as verified by the Contracting Officer using visual inspection or sample analysis, it shall be restored to its original condition or decontaminated by the Contractor at no expense to the Government, as deemed appropriate by the Contracting Officer. This includes inadvertent spill of dirt, dust or debris in which it is reasonable to conclude that asbestos may exist. When these spills occur, work shall stop in all effected areas immediately and the spill shall be cleaned. When satisfactory visual inspection and air sampling analysis results are obtained and have been evaluated by the Contractor's Designated IH and the Contracting Officer, work shall proceed.

3.3 OBJECTS

3.3.1 Removal of Mobile Objects

Mobile objects, furniture, and equipment will be removed from the area of work by the Government before asbestos abatement work begins.

3.4 BUILDING VENTILATION SYSTEM AND CRITICAL BARRIERS

Building ventilating systems supplying air into or returning air out of a regulated area shall be shut down and isolated by lockable switch or other

positive means in accordance with 29 CFR 1910, Section.147. Air-tight critical barriers shall be installed on building ventilating openings located inside the regulated area that supply or return air from the building ventilation system or serve to exhaust air from the building. The critical barriers shall consist of 2 layers of polyethylene. Edges to wall, ceiling and floor surfaces shall be sealed with industrial grade duct tape. Critical barriers shall be installed as shown on drawings and appended SET-UP DETAIL SHEETS.

3.5 PRECLEANING

Surfaces shall be cleaned by HEPA vacuum and adequately wet wiped prior to establishment of containment.

3.6 METHODS OF COMPLIANCE

3.6.1 Mandated Practices

The Contractor shall employ proper handling procedures in accordance with 29 CFR 1926 and 40 CFR 61, Subpart M, and the specified requirements. The specific abatement techniques and items identified shall be detailed in the Contractor's Asbestos Hazard Abatement Plan including, but not limited to, details of construction materials, equipment, and handling procedures. The Contractor shall use the following engineering controls and work practices in all operations, regardless of the levels of exposure:

a. Vacuum cleaners equipped with HEPA filters to collect debris and dust containing ACM.

b. Wet methods or wetting agents to control employee exposures during asbestos handling, mixing, removal, cutting, application, and cleanup; except where it can be demonstrated that the use of wet methods is unfeasible due to, for example, the creation of electrical hazards, equipment malfunction, and in roofing.

c. Prompt clean-up and disposalin leak-tight containers of wastes and debris contaminated with asbestos.

d. Inspection and repair of polyethylene in work and high traffic areas.

e. Cleaning of equipment and surfaces of containers filled with ACM prior to removing them from the equipment room or area.

3.6.2 Control Methods

The Contractor shall use the following control methods to comply with the PELs:

a. Local exhaust ventilation equipped with HEPA filter dust collection systems;

b. Enclosure or isolation of processes producing asbestos dust;

c. Ventilation of the regulated area to move contaminated air away from the breathing zone of employees and toward a filtration or collection device equipped with a HEPA filter;

d. Use of other work practices and engineering controls;

e. Where the feasible engineering and work practice controls described above are not sufficient to reduce employee exposure to or below the PELs, the Contractor shall use them to reduce employee exposure to the lowest levels attainable by these controls and shall supplement them by the use of respiratory protection that complies with paragraph, RESPIRATORY PROTECTION PROGRAM.

3.6.3 Unacceptable Practices

The following work practices and engineering controls shall not be used for work related to asbestos or for work which disturbs ACM, regardless of measured levels of asbestos exposure or the results of initial exposure assessments:

a. High-speed abrasive disc saws that are not equipped with point of cut ventilator or enclosures with HEPA filtered exhaust air.

b. Compressed air used to remove asbestos, or materials containing asbestos, unless the compressed air is used in conjunction with an enclosed ventilation system designed to capture the dust cloud created by the compressed air.

c. Dry sweeping, shoveling, or other dry clean-up of dust and debris containing ACM.

d. Employee rotation as a means of reducing employee exposure to asbestos.

3.6.4 Class I Work Procedures

In addition to requirements of paragraphs Mandated Practices and Control Methods, the following engineering controls and work practices shall be used:

a. A Competent Person shall supervise the installation and operation of the control system.

b. For jobs involving the removal of more than 25 feet or 10 square feet of TSI or surfacing material, the Contractor shall place critical barriers over all openings to the regulated area.

c. HVAC systems shall be isolated in the regulated area by sealing with a double layer of plastic or air-tight rigid covers.

d. Impermeable dropcloths (6 mil or greater thickness) shall be placed on surfaces beneath all removal activity.

e. Objects within the regulated area shall be handled as specified in paragraph OBJECTS.

f. Where a negative exposure assessment has not been provided or where exposure monitoring shows the PEL was exceeded, the regulated area shall be ventilated to move contaminated air away from the employee's breathing zone toward a HEPA unit or collection device.

3.6.5 Specific Control Methods for Class I Work

In addition to requirements of paragraph Class I Work Procedures, Class I asbestos work shall be performed using the control methods identified in the subparagraphs below.

3.6.5.1 Negative Pressure Enclosure (NPE) System

The NPE system shall be as shown in SETUP DETAIL SHEET 2, 3, or 4, as applicable and SETUP DETAIL 8.. The system shall provide at least 4 air changes per hour inside the containment. The local exhaust unit equipment shall be operated 24 hours per day until the containment is removed, and shall be leak-proof to the filter and equipped with HEPA filters. Air movement shall be directed away from the employees and toward a HEPA filtration device. The NPE shall be smoke tested for leaks at the beginning of each shift. Local exhaust equipment shall be sufficient to maintain a minimum pressure differential of minus 0.02 inch of water column relative to adjacent, unsealed areas. Pressure differential shall be monitored continuously, 24 hours per day, with an automatic manometric recording instrument. Pressure differential recordings shall be provided daily on the same day collected. Readings shall be reviewed by the Contractor's Designated Competent Person and IH prior to submittal. The Contracting Officer shall be notified immediately if the pressure differential falls below the prescribed minimum. The building ventilation system shall not be used as the local exhaust system for the regulated area. The local exhaust system shall terminate outdoors unless an alternate arrangement is allowed by the Contract Officer. All filters used shall be new at the beginning of the project and shall be periodically changed as necessary and disposed of as ACM waste.

3.6.5.2 Glovebag Systems

Glovebag systems shall be as shown in SETUP DETAIL SHEET 10. The glovebag system shall be used to remove ACM from straight runs of piping and elbows and other connections. Glovebags shall be used without modification and shall be smoke-tested for leaks and any leaks sealed prior to use. Glovebags shall be installed to completely cover the circumference of pipe or other structures where the work is to be done. Glovebags shall be used only once and shall not be moved. Glovebags shall not be used on surfaces that have temperatures exceeding 150 degrees F. Prior to disposal, glovebags shall be collapsed by removing air within them using a HEPA vacuum. Before beginning the operation, loose and friable material adjacent to the glovebag operation shall be wrapped and sealed in 2 layers of plastic or otherwise rendered intact. At least 2 persons shall perform Class I glovebag removal. Asbestos regulated work areas shall be established as specified and shown on detailed drawings and plans for glovebag abatement. Designated boundary limits for the asbestos work shall be established with rope or other continuous barriers and all other requirements for asbestos control areas shall be maintained, including area signage and boundary warning tape as specified in SET-UP DETAIL SHEET 11.

a. In addition to requirements for negative pressure glovebag systems above, the Contractor shall attach HEPA vacuum systems or other devices to the bag to prevent collapse during removal of ACM from straight runs of piping and elbows and other connections.

b. The negative pressure glove boxes used to remove ACM from pipe runs shall be fitted with gloved apertures and a bagging outlet and constructed with rigid sides from metal or other material

which can withstand the weight of the ACM and water used during removal. A negative pressure shall be created in the system using a HEPA filtration system. The box shall be smoke tested for leaks prior to each use.

3.6.5.3 Wrap and Cut Operation

Wrap and cut operations shall be as shown in SETUP DETAIL SHEET 9B and 10 and may be used for underground piping once exposed.. Prior to cutting pipe, the asbestos-containing insulation shall be wrapped with polyethylene and securely sealed with duct tape to prevent asbestos becoming airborne as a result of the cutting process. The following steps shall be taken: install glovebag, strip back sections to be cut 6 inches from point of cut, and cut pipe into manageable sections.

3.6.6 Class II Work

In addition to the requirements of paragraphs Mandated Practices and Control Methods, the following engineering controls and work practices shall be used:

a. A Competent Person shall supervise the work.

b. For indoor work, critical barriers shall be placed over all openings to the regulated area.

c. Impermeable dropcloths shall be placed on surfaces beneath all removal activity.

3.6.7 Specific Control Methods for Class II Work

In addition to requirements of paragraph Class II Work, Class II work shall be performed using the following methods:

3.6.7.1 Vinyl and Asphalt Flooring Materials

When removing vinyl and asphalt flooring materials which contain ACM, the Contractor shall use the following practices as shown in RESPONSE ACTION DETAIL SHEET 59. Resilient sheeting shall be removed by adequately wet methods. Tiles shall be removed intact (if possible); wetting is not required when tiles are heated and removed intact. Flooring or its backing shall not be sanded. Scraping of residual adhesive and/or backing shall be performed using wet methods. Low odor mastic remover shall be used for floor tile mastic removal. Mechanical chipping is prohibited unless performed in a negative pressure enclosure. Dry sweeping is prohibited. The Contractor shall use vacuums equipped with HEPA filter, disposable dust bag, and metal floor tool (no brush) to clean floors.

3.6.7.2 Roofing Material

When removing roofing materials which contain ACM as described in 29 CFR 1926, Section .1101(g)(8)(ii), the Contractor shall use the following practices as shown in RESPONSE ACTION DETAIL SHEET 74. Roofing material shall be removed in an intact state using manual methods. Wet methods shall be used to remove roofing materials that are not intact, or that will be rendered not intact during removal, unless such wet methods are not feasible or will create safety hazards. Asbestos-containing roofing material shall not be dropped or thrown to the ground, but shall be lowered to the ground via covered, dust-tight chute, crane, hoist or other method

approved by the Contracting Officer. Any ACM that is not intact shall be lowered to the ground as soon as practicable, but not later than the end of the work shift. While the material remains on the roof it shall be kept wet or placed in an impermeable waste bag or wrapped in plastic sheeting. Intact ACM shall be lowered to the ground as soon as practicable, but not later than the end of the work shift. Unwrapped material shall be transferred to a closed receptacle precluding the dispersion of dust. Critical barriers shall be placed over roof level heating and ventilation air intakes.

3.6.7.3 Cementitious Siding and Shingles or Transite Panels

When removing cementitious asbestos-containing siding, shingles or transite panels the Contractor shall use the following practices shown in RESPONSE ACTION DETAIL SHEET 81. Intentionally cutting, abrading or breaking siding, shingles, or transite panels is prohibited. Each panel or shingle shall be sprayed with amended water prior to removal. Fasteners shall be cut with flat, sharp instruments. Unwrapped or unbagged panels or shingles shall be immediately lowered to the ground via covered dust-tight chute, crane or hoist, or placed in an impervious waste bag or wrapped in plastic sheeting and lowered to the ground no later than the end of the work shift.

3.6.7.4 Other Class II Jobs

The Contractor shall use the following work practices when performing Class II removal of glued-on acoustical ceiling tile and glue dots remaining from removed wall tile ACM: The material shall be thoroughly wetted with amended water prior and during its removal. The material shall be removed in an intact state. Cutting, abrading or breaking the material is prohibited. The ACM removed shall be immediately bagged or wrapped.

3.6.8 Specific Control Methods for Class IV Work

Class IV jobs shall be conducted using wet methods, HEPA vacuums, and prompt clean-up of debris containing ACM. Employees cleaning up debris and waste in a regulated area where respirators are required shall wear the selected respirators.

3.6.9 Cleaning After Asbestos Removal

After completion of all asbestos removal work, surfaces from which ACM has been removed shall be wet wiped or sponged clean, or cleaned by some equivalent method to remove all visible residue. Run-off water shall be collected and filtered through a dual filtration system. A first filter shall be provided to remove fibers 20 micrometers and larger, and a final filter provided that removes fibers 5 micrometers and larger. After the gross amounts of asbestos have been removed from every surface, remaining visible accumulations of asbestos on floors shall be collected using plastic shovels, rubber squeegees, rubber dustpans, and HEPA vacuum cleaners as appropriate to maintain the integrity of the regulated area. When TSI and surfacing material has been removed, workmen shall use HEPA vacuum cleaners to vacuum every surface. Surfaces or locations which could harbor accumulations or residual asbestos dust shall be checked after vacuuming to verify that no asbestos-containing material remains; and shall be re-vacuumed as necessary to remove the ACM.

3.6.10 Class I Asbestos Work Response Action Detail Sheets

The following Class I Asbestos Work Response Action Detail Sheet is

specified on Table 1 for each individual work task to be performed:

a. Pipe Insulation (Using a Glovebag): See Sheet 87

b. Horizontal Pipe Insulation (Using a Containment Area): See Sheet 88

3.6.11 Class II Asbestos Work Response Action Detail Sheets

The following Class II Asbestos Work Response Action Detail Sheet is specified on Table 1 for each individual work task to be performed:

a. Glued-on Acoustical Ceiling and Wall Tile: See Sheet 55

b. Vinyl Asbestos Tile and Chemical Dissolution of Asbestos-Containing Adhesives on Concrete Floor System: See Sheet 59

c. Built-Up Roofing and Flashing: See Sheet 74

d. Asbestos Cement Siding: See Sheet 81

3.6.12 Abatement of Asbestos Contaminated Soil

Asbestos contaminated soil, if encountered, shall be removed from areas to a minimum depth of 2 inches. Soil shall be thoroughly dampened with amended water and then removed by manual shoveling into labeled containers. The workers shall be closely monitored for heat exhaustion. The minimum ventilation shall be 8 air changes per hour through a local exhaust HEPA system. See DETAIL SHEET 73.

3.7 FINAL CLEANING AND VISUAL INSPECTION

Upon completion of abatement, the regulated area shall be cleaned by collecting, packing, and storing all gross contamination; see SET-UP DETAIL SHEETS 9, 14 and 20. A final cleaning shall be performed using HEPA vacuum and wet cleaning of all exposed surfaces and objects in the regulated area. Upon completion of the cleaning, the Contractor shall conduct a visual pre-inspection of the cleaned area in preparation for a final inspection before final air clearance monitoring and recleaning, as necessary. Upon completion of the final cleaning, the Contractor and the Contracting Officer shall conduct a final visual inspection of the cleaned regulated area in accordance with ASTM E 1368 and document the results on the Final Cleaning and Visual Inspection as specified on the SET-UP DETAIL SHEET 19. If the Contracting Officer rejects the clean regulated area as not meeting final cleaning requirements, the Contractor shall recleaned as necessary and have a follow-on inspection conducted with the Contracting Officer. Recleaning and follow-up reinspection shall be at the Contractor's expense.

3.8 LOCKDOWN

Prior to removal of plastic barriers and after clean-up of gross contamination and final visual inspection, a post removal (lockdown) encapsulant shall be spray applied to ceiling, walls, floors, and other surfaces in the regulated area.

3.9 EXPOSURE ASSESSMENT AND AIR MONITORING

3.9.1 General Requirements For Exposure

Exposure assessment, air monitoring and analysis of airborne concentration of asbestos fibers shall be performed in accordance with 29 CFR 1926, Section .1101, the Contractor's air monitoring plan, and as specified. Personal exposure air monitoring (collected at the breathing zone) that is representative of the exposure of each employee who is assigned to work within a regulated area shall be performed by the Contractor's Designated IH. Breathing zone samples shall be taken for at least 25 percent of the workers in each shift, or a minimum of 2, whichever is greater. Air monitoring results at the 95 percent confidence level shall be calculated as shown in Table 2 at the end of this section. The Contractor shall provide an onsite independent testing laboratory with qualified analysts and appropriate equipment to conduct sample analyses of air samples using the methods prescribed in 29 CFR 1926, Section.1101, to include NIOSH 84-100 Method 7400. Preabatement and abatement environmental air monitoring shall be performed by the Contractor's Designated IH and Contracting Officer's IH. Final clearance environmental air monitoring, shall be performed by the Contractor's Designated IH. Environmental and final clearance air monitoring shall be performed using NIOSH 84-100 Method 7400 (PCM) . For environmental and final clearance, air monitoring shall be conducted at a sufficient velocity and duration to establish the limit of detection of the method used at 0.005 f/cc. Confirmation of asbestos fiber concentrations (asbestos f/cc) from environmental and final clearance samples collected and analyzed by NIOSH 84-100 Method 7400 (total f/cc) may be conducted using TEM in accordance with NIOSH 84-100 Method 7402. When such confirmation is conducted, it shall be from the same sample filter used for the NIOSH 84-100 Method 7400 PCM analysis. For all Contractor required environmental or final clearance air monitoring, confirmation of asbestos fiber concentrations, using NIOSH 84-100 Method 7402, shall be at the Contractor's expense. Monitoring may be duplicated by the Government at the discretion of the Contracting Officer. Results of breathing zone samples shall be posted at the job site and made available to the Contracting Officer. The Contractor shall maintain a fiber concentration inside a regulated area less than or equal to 0.1 f/cc expressed as an 8 hour, time-weighted average (TWA) during the conduct of the asbestos abatement. If fiber concentration rises above 0.1 f/cc, work procedures shall be investigated with the Contracting Officer to determine the cause. At the discretion of the Contracting Officer, fiber concentration may exceed 0.1 f/cc but shall not exceed 1.0 f/cc expressed as an 8-hour TWA. The Contractor's workers shall not be exposed to an airborne fiber concentration in excess of 1.0 f/cc, as averaged over a sampling period of 30 minutes. Should either an environmental concentration of 1.0 f/cc expressed as an 8-hour TWA or a personal excursion concentration of 1.0 f/cc expressed as a 30-minute sample occur inside a regulated work area, the Contractor shall stop work immediately, notify the Contracting Officer, and implement additional engineering controls and work practice controls to reduce airborne fiber levels below prescribed limits in the work area. Work shall not restart until authorized by the Contracting Officer.

3.9.2 Initial Exposure Assessment

The Contractor's Designated IH shall conduct an exposure assessment immediately before or at the initiation of an asbestos abatement operation to ascertain expected exposures during that operation. The assessment shall be completed in time to comply with the requirements which are triggered by exposure data or the lack of a negative exposure assessment,

and to provide information necessary to assure that all control systems planned are appropriate for that operation. The assessment shall take into consideration both the monitoring results and all observations, information or calculations which indicate employee exposure to asbestos, including any previous monitoring conducted in the workplace, or of the operations of the Contractor which indicate the levels of airborne asbestos likely to be encountered on the job. For Class I asbestos work, until the employer conducts exposure monitoring and documents that employees on that job will not be exposed in excess of PELs, or otherwise makes a negative exposure assessment, the Contractor shall presume that employees are exposed in excess of the PEL-TWA and PEL-Excursion Limit.

3.9.3 Negative Exposure Assessment

The Contractor shall provide a negative exposure assessment for the specific asbestos job which will be performed. The negative exposure assessment shall be provided within 10 days of the initiation of the project and conform to the following criteria:

a. Objective Data: Objective data demonstrating that the product or material containing asbestos minerals or the activity involving such product or material cannot release airborne fibers in concentrations exceeding the PEL-TWA and PEL-Excursion Limit under those work conditions having the greatest potential for releasing asbestos.

b. Prior Asbestos Jobs: Where the Contractor has monitored prior asbestos jobs for the PEL and the PEL-Excursion Limit within 12 months of the current job, the monitoring and analysis were performed in compliance with asbestos standard in effect; the data were obtained during work operations conducted under workplace conditions closely resembling the processes, type of material, control methods, work practices, and environmental conditions used and prevailing in the Contractor's current operations; the operations were conducted by employees whose training and experience are no more extensive than that of employees performing the current job; and these data show that under the conditions prevailing and which will prevail in the current workplace, there is a high degree of certainty that the monitoring covered exposure from employee exposures will not exceed the PEL-TWA and PEL-Excursion Limit.

c. Initial Exposure Monitoring: The results of initial exposure monitoring of the current job, made from breathing zone air samples that are representative of the 8-hour PEL-TWA and 30-minute short-term exposures of each employee. The monitoring covered exposure from operations which are most likely during the performance of the entire asbestos job to result in exposures over the PELs.

3.9.4 Independent Environmental Monitoring

The Contractor shall retain an independent air monitoring firm to perform pre-abatement, during abatement, and final clearance air monitoring. The air monitoring contractor has been provided a copy of the contract that includes this abatement work. The abatement contractor will provide the air monitoring contractor with an up-to-date copy of the accepted Asbestos Hazard Abatement Plan, Accident Prevention Plan and pertinent detailed drawings. The air monitoring contractor is required to comply with the

abatement contractor's safety and health requirements. The abatement contractor will coordinate all onsite activities with the air monitoring contractor, the COR, and other affected parties as directed by the COR. The abatement contractor will provide the air monitoring contractor with an up-to-date schedule of abatement contractor work activities. The air monitoring contractor will coordinate with the abatement contractor and the COR during the performance Government required air monitoring. The abatement contractor is responsible for performing exposure assessment and personal air monitoring of abatement contractor's work. The air monitoring contractor is responsible for performing these tasks for its employee.

3.9.5 Preabatement Environmental Air Monitoring

Preabatement environmental air monitoring shall be established 1 day prior to the masking and sealing operations for each regulated area to determine background concentrations before abatement work begins. As a minimum, preabatement air samples shall be collected using NIOSH 84-100 Method 7400, PCM at these locations: outside the building; inside the building, but outside the regulated area perimeter; and inside each regulated work area. One sample shall be collected for every 2000 square feet of floor space. At least 2 samples shall be collected outside the building: at the exhaust of the HEPA unit; and downwind from the abatement site. The PCM samples shall be analyzed within 24 hours; and if any result in fiber concentration greater than 0.01 f/cc, asbestos fiber concentration shall be confirmed using NIOSH 84-100 Method 7402 (TEM).

3.9.6 Environmental Air Monitoring During Abatement

Until an exposure assessment is provided to the Contracting Officer, environmental air monitoring shall be conducted at locations and frequencies that will accurately characterize any evolving airborne asbestos fiber concentrations. The assessment shall demonstrate that the product or material containing asbestos minerals, or the abatement involving such product or material, cannot release airborne asbestos fibers in concentrations exceeding 0.01 f/cc as a TWA under those work conditions having the greatest potential for releasing asbestos. The monitoring shall be at least once per shift at locations including, but not limited to, close to the work inside a regulated area; preabatement sampling locations; outside entrances to a regulated area; close to glovebag operations; representative locations outside of the perimeter of a regulated area; inside clean room; and at the exhaust discharge point of local exhaust system ducted to the outside of a containment (if used). If the sampling outside regulated area shows airborne fiber levels have exceeded background or 0.01 f/cc, whichever is greater, work shall be stopped immediately, and the Contracting Officer notified. The condition causing the increase shall be corrected. Work shall not restart until authorized by the Contracting Officer.

3.9.7 Final Clearance Air Monitoring

If results of environmental air monitoring during glove bag removal activities are less than 0.01 f/cc, these results may be considered final clearance. Prior to conducting final clearance air monitoring, the Contractor and the Contracting Officer shall conduct a final visual inspection of the regulated area where asbestos abatement has been completed. The final visual inspection shall be as specified in SET-UP DETAIL SHEET 19. Final clearance air monitoring shall not begin until acceptance of the Contractor's final cleaning by the Contracting Officer. The Contractor's Designated IH shall conduct final clearance air monitoring

using aggressive air sampling techniques as defined in EPA 560/5-85-024 or as otherwise required by federal or state requirements. The sampling and analytical method used will be NIOSH 84-100Method 7400 (PCM) and Table 3.

3.9.7.1 Final Clearance Requirements, NIOSH PCM Method

For PCM sampling and analysis using NIOSH 84-100 Method 7400, the fiber concentration inside the abated regulated area, for each airborne sample, shall be less than 0.01 f/cc. The abatement inside the regulated area is considered complete when every PCM final clearance sample is below the clearance limit. If any sample result is greater than 0.01 total f/cc, the asbestos fiber concentration (asbestos f/cc) shall be confirmed from that same filter using NIOSH 84-100 Method 7402 (TEM) at Contractor's expense. If any confirmation sample result is greater than 0.01 asbestos f/cc, abatement is incomplete and cleaning shall be repeated. Upon completion of any required recleaning, resampling with results to meet the above clearance criteria shall be done.

3.9.7.2 Air Clearance Failure

If clearance sampling results fail to meet the final clearance requirements, the Contractor shall pay all costs associated with the required recleaning, resampling, and analysis, until final clearance requirements are met.

3.9.8 Air-Monitoring Results and Documentation

Air sample fiber counting shall be completed and results provided within 24 hours (breathing zone samples), and 48 hours (environmental/clearance monitoring) after completion of a sampling period. The Contracting Officer shall be notified immediately of any airborne levels of asbestos fibers in excess of established requirements. Written sampling results shall be provided within 5 working days of the date of collection. The written results shall be signed by testing laboratory analyst, testing laboratory principal and the Contractor's Designated IH. The air sampling results shall be documented on a Contractor's daily air monitoring log. The daily air monitoring log shall contain the following information for each sample:

a. Sampling and analytical method used;

b. Date sample collected;

c. Sample number;

d. Sample type: BZ = Breathing Zone (Personal), P = Preabatement, E = Environmental, C = Abatement Clearance;

e. Location/activity/name where sample collected;

f. Sampling pump manufacturer, model and serial number, beginning flow rate, end flow rate, average flow rate (L/min);

g. Calibration date, time, method, location, name of calibrator, signature;

h. Sample period (start time, stop time, elapsed time (minutes);

i. Total air volume sampled (liters);

j. Sample results (f/cc and S/mm square) if EPA methods are required for final clearance;

k. Laboratory name, location, analytical method, analyst, confidence level. In addition, the printed name and a signature and date block for the Industrial Hygienist who conducted the sampling and for the Industrial Hygienist who reviewed the daily air monitoring log verifying the accuracy of the information.

3.10 CLEARANCE CERTIFICATION

When asbestos abatement is complete, ACM waste is removed from the regulated areas, and final clean-up is completed, the Contracting Officer will certify the areas as safe before allowing the warning signs and boundary warning tape to be removed. After final clean-up and acceptable airborne concentrations are attained, but before the HEPA unit is turned off and the containment removed, the Contractor shall remove all pre-filters on the building HVAC system and provide new pre-filters. The Contractor shall dispose of such filters as asbestos contaminated materials. HVAC, mechanical, and electrical systems shall be re-established in proper working order. The Contractor and the Contracting Officer shall visually inspect all surfaces within the containment for residual material or accumulated debris. The Contractor shall reclean all areas showing dust or residual materials. The Contracting Officer will certify in writing that the area is safe before unrestricted entry is permitted. The Government will have the option to perform monitoring to certify the areas are safe before entry is permitted.

3.11 CLEANUP AND DISPOSAL

3.11.1 Title to ACM Materials

ACM material resulting from abatement work, except as specified otherwise, shall become the property of the Contractor and shall be disposed of as specified and in accordance with applicable federal, state and local regulations.

3.11.2 Collection and Disposal of Asbestos

All ACM waste shall be collected and including contaminated wastewater filters, scrap, debris, bags, containers, equipment, and asbestos contaminated clothing, shall be collected and placed in leak-tight containers such as double plastic bags (see DETAIL SHEET 9A); sealed double wrapped polyethylene sheet (see DETAIL 9B); or other approved containers. Waste within the containers shall be wetted in case the container is breeched. Asbestos-containing waste shall be disposed of at an EPA, state and local approved asbestos landfill off Government property. For temporary storage, sealed impermeable containers shall be stored in an asbestos waste load-out unit or in a storage/transportation conveyance (i.e., dumpster, roll-off waste boxes, etc.) in a manner acceptable to and in an area assigned by the Contracting Officer. Procedure for hauling and disposal shall comply with 40 CFR 61, Subpart M, state, regional, and local standards.

3.11.3 Asbestos Waste Shipment Record

The Contractor shall complete and provide the Contracting Officer final completed copies of the Waste Shipment Record for all shipments of waste material as specified in 40 CFR 61, Subpart M and other required state

waste manifest shipment records, within 3 days of delivery to the landfill. Each Waste Shipment Record shall be signed and dated by the Contractor, the waste transporter and disposal facility operator.

TABLE 1

INDIVIDUAL WORK TASK DATA ELEMENTS

Sheet__1__ of _16__

There is a separate data sheet for each individual work task.

1. WORK TASK DESIGNATION NUMBER 4600-01
2. LOCATION OF WORK TASK_Building 4600 - throughout building_____
3. BRIEF DESCRIPTION OF MATERIAL TO BE ABATED: Thermal system insulation on pipe, pipe elbow fittings and associated mastic

   a. Type of Asbestos Chrysotile
   b. Percent asbestos content Insulation 10% + 25% + 35%
      Mastic 2%

4. ABATEMENT TECHNIQUE TO BE USED REM
5. OSHA ASBESTOS CLASS DESIGNATION FOR WORK TASK_ I
6. EPA NESHAP FRIABILITY DESIGNATION FOR WORK TASK
   Friable X Non-friable Category I
   Non-friable Category II_____
7. FORM _ME__ and CONDITION OF ACM: GOOD_X___ FAIR_____ POOR_____
8. QUANTITY: METERS_____, SQUARE METERS_____
8a. QUANTITY: LINEAR FT.___1685_____, SQUARE FT._____
9. RESPONSE ACTION DETAIL SHEET NUMBER FOR WORK TASK___88_____
10. SET-UP DETAIL SHEET NUMBERS
    FOR WORK TASK ____2_____, ____3_____, ___16_____, ____17____,
    ___11_____, ___22_____, ___20_____, ____14____.
    19

INDIVIDUAL WORK TASK DATA ELEMENTS

Sheet__2__ of _16__

There is a separate data sheet for each individual work task.

1. WORK TASK DESIGNATION NUMBER A600-02
2. LOCATION OF WORK TASK Building 4600 (Lounge, Locker Room and Bay)
3. BRIEF DESCRIPTION OF MATERIAL TO BE ABATED: Thermal system insulation on pipe, pipe elbow/fitting and mastic

   a. Type of Asbestos Chrysotile
   b. Percent asbestos content Insulation 10% + 25%
      Mastic 2%

4. ABATEMENT TECHNIQUE TO BE USED REM
5. OSHA ASBESTOS CLASS DESIGNATION FOR WORK TASK____I_____
6. EPA NESHAP FRIABILITY DESIGNATION FOR WORK TASK
   Friable __X__ Non-friable Category I _____
   Non-friable Category II_____
7. FORM _ME__ and CONDITION OF ACM: GOOD__X__ FAIR_____ POOR_____
8. QUANTITY: METERS_____, SQUARE METERS_____
8a. QUANTITY: LINEAR FT.___200_____, SQUARE FT._____
9. RESPONSE ACTION DETAIL SHEET NUMBER FOR WORK TASK____87_____
10. SET-UP DETAIL SHEET NUMBERS

TABLE 1

INDIVIDUAL WORK TASK DATA ELEMENTS
FOR WORK TASK ____10____, ___21_____, ____14____, ____9_____,
____19____, _____, _____, _____.

INDIVIDUAL WORK TASK DATA ELEMENTS

Sheet__3__ of _16__

There is a separate data sheet for each individual work task.

1. WORK TASK DESIGNATION NUMBER 4600-03
2. LOCATION OF WORK TASK_ Building 4600 - Tower
3. BRIEF DESCRIPTION OF MATERIAL TO BE ABATED: Corrugated cement siding

   a. Type of Asbestos _Chrysotile
   b. Percent asbestos content _____15_____%

4. ABATEMENT TECHNIQUE TO BE USED_____REM_____
5. OSHA ASBESTOS CLASS DESIGNATION FOR WORK TASK____II_____
6. EPA NESHAP FRIABILITY DESIGNATION FOR WORK TASK
   Friable _____ Non-friable Category I _____
   Non-friable Category II__X__
7. FORM __EA_ and CONDITION OF ACM: GOOD__x__ FAIR_____ POOR_____
8. QUANTITY: METERS_____, SQUARE METERS_____
8a. QUANTITY: LINEAR FT._____, SQUARE FT.___1,200_____
9. RESPONSE ACTION DETAIL SHEET NUMBER FOR WORK TASK___81_____
10. SET-UP DETAIL SHEET NUMBERS
    FOR WORK TASK _____11___, ____9B___, ____14____, ____19____,
    _____, _____, _____, _____.

INDIVIDUAL WORK TASK DATA ELEMENTS

Sheet__4__ of _16__

There is a separate data sheet for each individual work task.

1. WORK TASK DESIGNATION NUMBER 4600-04
2. LOCATION OF WORK TASK_ Building 4600 - Roof
3. BRIEF DESCRIPTION OF MATERIAL TO BE ABATED:_____
   _____Built-up roofing_____

   a. Type of Asbestos ___Chrysotile_____
   b. Percent asbestos content __5_____%

4. ABATEMENT TECHNIQUE TO BE USED___REM_____
5. OSHA ASBESTOS CLASS DESIGNATION FOR WORK TASK_____II_____
6. EPA NESHAP FRIABILITY DESIGNATION FOR WORK TASK
   Friable _____ Non-friable Category I __X__
   Non-friable Category II_____
7. FORM _EA__ and CONDITION OF ACM: GOOD__X__ FAIR_____ POOR_____
8. QUANTITY: METERS_____, SQUARE METERS_____
8a. QUANTITY: LINEAR FT._____, SQUARE FT._13,500_____
9. RESPONSE ACTION DETAIL SHEET NUMBER FOR WORK TASK 74_____
10. SET-UP DETAIL SHEET NUMBERS
    FOR WORK TASK _____11___, _____14___, ____19____, ___9A_____,

TABLE 1

INDIVIDUAL WORK TASK DATA ELEMENTS
_____, _____, _____, _____.

INDIVIDUAL WORK TASK DATA ELEMENTS

Sheet_5___ of _16__

There is a separate data sheet for each individual work task.

1. WORK TASK DESIGNATION NUMBER 4600-05
2. LOCATION OF WORK TASK Building 4600 - Storage Room (To Tower)
3. BRIEF DESCRIPTION OF MATERIAL TO BE ABATED:
___Floor tile and associated mastic (multiple layers_____

   a. Type of Asbestos __Chrysotile_____
   b. Percent asbestos content _5____%

4. ABATEMENT TECHNIQUE TO BE USED___REM_____
5. OSHA ASBESTOS CLASS DESIGNATION FOR WORK TASK____II_____
6. EPA NESHAP FRIABILITY DESIGNATION FOR WORK TASK
   Friable _____ Non-friable Category I __X__
   Non-friable Category II_____
7. FORM _IA__ and CONDITION OF ACM: GOOD__X__ FAIR_____ POOR_____
8. QUANTITY: METERS_____, SQUARE METERS_____
8a. QUANTITY: LINEAR FT._____, SQUARE FT.__120_____
9. RESPONSE ACTION DETAIL SHEET NUMBER FOR WORK TASK___59_____
10. SET-UP DETAIL SHEET NUMBERS
    FOR WORK TASK ____4_____, ____9A____, ___14_____, ___18_____,
    ____20____, ____22____, _____, _____.

INDIVIDUAL WORK TASK DATA ELEMENTS

Sheet__6__ of _16__

There is a separate data sheet for each individual work task.

1. WORK TASK DESIGNATION NUMBER 4600-06
2. LOCATION OF WORK TASK__ Building 4600 - Control Room and Storage Room
3. BRIEF DESCRIPTION OF MATERIAL TO BE ABATED:
___1' x 1' ceiling tile_____

   a. Type of Asbestos ___Chrysotile_____
   b. Percent asbestos content _4_____%

4. ABATEMENT TECHNIQUE TO BE USED____REM_____
5. OSHA ASBESTOS CLASS DESIGNATION FOR WORK TASK____II_____
6. EPA NESHAP FRIABILITY DESIGNATION FOR WORK TASK
   Friable __X__ Non-friable Category I _____
   Non-friable Category II_____
7. FORM __IA_ and CONDITION OF ACM: GOOD__X__ FAIR_____ POOR_____
8. QUANTITY: METERS_____, SQUARE METERS_____
8a. QUANTITY: LINEAR FT._____, SQUARE FT.__315_____
9. RESPONSE ACTION DETAIL SHEET NUMBER FOR WORK TASK___55_____
10. SET-UP DETAIL SHEET NUMBERS
    FOR WORK TASK ____2_____, ____3_____, _____9B___, ____14____,
    ___16_____, ___17_____, _____9A___, ____22____.

TABLE 1

INDIVIDUAL WORK TASK DATA ELEMENTS
22

INDIVIDUAL WORK TASK DATA ELEMENTS

Sheet__7__ of _16__

There is a separate data sheet for each individual work task.

1. WORK TASK DESIGNATION NUMBER _4600-07
2. LOCATION OF WORK TASK_ Building 4600 - Office Area
3. BRIEF DESCRIPTION OF MATERIAL TO BE ABATED:
__Brown mastic dots on CMU wall

   a. Type of Asbestos ___Chrysotile
   b. Percent asbestos content __2_____%

4. ABATEMENT TECHNIQUE TO BE USED__REM
5. OSHA ASBESTOS CLASS DESIGNATION FOR WORK TASK___II
6. EPA NESHAP FRIABILITY DESIGNATION FOR WORK TASK
   Friable _____ Non-friable Category I __X__
   Non-friable Category II_____
7. FORM __IA_ and CONDITION OF ACM: GOOD__X__ FAIR_____ POOR_____
8. QUANTITY: METERS_____, SQUARE METERS_____
8a. QUANTITY: LINEAR FT._____, SQUARE FT.___40_____
9. RESPONSE ACTION DETAIL SHEET NUMBER FOR WORK TASK___55_____
10. SET-UP DETAIL SHEET NUMBERS
    FOR WORK TASK _____2____, ____3_____, ____9A____, ___14_____,
    ____16____, ___17_____, ___20_____, ___22_____.

INDIVIDUAL WORK TASK DATA ELEMENTS

Sheet__8__ of _16__

There is a separate data sheet for each individual work task.

1. WORK TASK DESIGNATION NUMBER 4600-08
2. LOCATION OF WORK TASK_ Building 4600-Underground
3. BRIEF DESCRIPTION OF MATERIAL TO BE ABATED:_Thermal system
   insulation on underground piping

   a. Type of Asbestos ___Chrysotile
   b. Percent asbestos content ___60-70_____%

4. ABATEMENT TECHNIQUE TO BE USED_____REM
5. OSHA ASBESTOS CLASS DESIGNATION FOR WORK TASK_____I
6. EPA NESHAP FRIABILITY DESIGNATION FOR WORK TASK
   Friable __X__ Non-friable Category I _____
   Non-friable Category II_____
7. FORM _ME__ and CONDITION OF ACM: GOOD__X__ FAIR_____ POOR_____
8. QUANTITY: METERS_____, SQUARE METERS_____
8a. QUANTITY: LINEAR FT.____695_____, SQUARE FT._____
9. RESPONSE ACTION DETAIL SHEET NUMBER FOR WORK TASK_____
10. SET-UP DETAIL SHEET NUMBERS
    FOR WORK TASK _____9B___, _____10___, _____, _____,
    _____, _____, _____, _____.

TABLE 1

INDIVIDUAL WORK TASK DATA ELEMENTS

INDIVIDUAL WORK TASK DATA ELEMENTS

Sheet_09__ of _16__

There is a separate data sheet for each individual work task.

1. WORK TASK DESIGNATION NUMBER 4600-09
2. LOCATION OF WORK TASK_ Building 4600 - Exterior
3. BRIEF DESCRIPTION OF MATERIAL TO BE ABATED:Windows with ACM___ window glazing
   a. Type of Asbestos ____Chrysotile
   b. Percent asbestos content __3-4_____%
4. ABATEMENT TECHNIQUE TO BE USED___REM
5. OSHA ASBESTOS CLASS DESIGNATION FOR WORK TASK____II
6. EPA NESHAP FRIABILITY DESIGNATION FOR WORK TASK
   Friable _____ Non-friable Category I _____
   Non-friable Category II__X__
7. FORM _EA__ and CONDITION OF ACM: GOOD_____ FAIR_____ POOR_____
8. QUANTITY: METERS_____, SQUARE METERS_____
8a. QUANTITY: LINEAR FT._____, SQUARE FT.windows - 30___
9. RESPONSE ACTION DETAIL SHEET NUMBER FOR WORK TASK_____
10. SET-UP DETAIL SHEET NUMBERS
    FOR WORK TASK _____11___, ____9B____, ___14_____, ___19_____,
    _____, _____, _____, _____.

INDIVIDUAL WORK TASK DATA ELEMENTS

Sheet_10__ of _16__

There is a separate data sheet for each individual work task.

1. WORK TASK DESIGNATION NUMBER 4605-01
2. LOCATION OF WORK TASK_ Building 4605 - Roof
3. BRIEF DESCRIPTION OF MATERIAL TO BE ABATED:_____
   ___Built-up roofing and flashing
   a. Type of Asbestos _Assumed_____
   b. Percent asbestos content _____%
4. ABATEMENT TECHNIQUE TO BE USED____REM
5. OSHA ASBESTOS CLASS DESIGNATION FOR WORK TASK___II
6. EPA NESHAP FRIABILITY DESIGNATION FOR WORK TASK
   Friable _____ Non-friable Category I __X__
   Non-friable Category II_____
7. FORM _EA__ and CONDITION OF ACM: GOOD__X__ FAIR_____ POOR_____
8. QUANTITY: METERS_____, SQUARE METERS_____
8a. QUANTITY: LINEAR FT._____, SQUARE FT.____1,800____
9. RESPONSE ACTION DETAIL SHEET NUMBER FOR WORK TASK___74_____
10. SET-UP DETAIL SHEET NUMBERS
    FOR WORK TASK ____11____, ___14_____, ___19_____, ____9A____,
    _____, _____, _____, _____.

TABLE 1

INDIVIDUAL WORK TASK DATA ELEMENTS
INDIVIDUAL WORK TASK DATA ELEMENTS

Sheet__11_ of _16__

There is a separate data sheet for each individual work task.

1. WORK TASK DESIGNATION NUMBER 4605-02
2. LOCATION OF WORK TASK__Building 4605 - Storage Room
3. BRIEF DESCRIPTION OF MATERIAL TO BE ABATED:
   Floor tile mastic_and associated floor tile
   a. Type of Asbestos __Chrysotile
   b. Percent asbestos content _____2_____%
4. ABATEMENT TECHNIQUE TO BE USED__REM
5. OSHA ASBESTOS CLASS DESIGNATION FOR WORK TASK_____II
6. EPA NESHAP FRIABILITY DESIGNATION FOR WORK TASK
   Friable _____ Non-friable Category I __X__
   Non-friable Category II_____
7. FORM _IA__ and CONDITION OF ACM: GOOD__X__ FAIR_____ POOR_____
8. QUANTITY: METERS_____, SQUARE METERS_____
8a. QUANTITY: LINEAR FT._____, SQUARE FT.__175_____
9. RESPONSE ACTION DETAIL SHEET NUMBER FOR WORK TASK__59_____
10. SET-UP DETAIL SHEET NUMBERS
    FOR WORK TASK ___4___, ___9A_____, ____14____, ___18_____,
    __20_____, ___22_____, _____, _____.

INDIVIDUAL WORK TASK DATA ELEMENTS

Sheet_12__ of _16__

There is a separate data sheet for each individual work task.

1. WORK TASK DESIGNATION NUMBER 4610-01
2. LOCATION OF WORK TASK_ Building 4610 - Roof
3. BRIEF DESCRIPTION OF MATERIAL TO BE ABATED:
   _____Pitch pocket
   a. Type of Asbestos _Chrysotile
   b. Percent asbestos content _____5_____%
4. ABATEMENT TECHNIQUE TO BE USED_____REM
5. OSHA ASBESTOS CLASS DESIGNATION FOR WORK TASK_____II
6. EPA NESHAP FRIABILITY DESIGNATION FOR WORK TASK
   Friable _____ Non-friable Category I __X__
   Non-friable Category II_____
7. FORM __EA_ and CONDITION OF ACM: GOOD__X__ FAIR_____ POOR_____
8. QUANTITY: METERS_____, SQUARE METERS_____
8a. QUANTITY: LINEAR FT._____, SQUARE FT.___N/A_____
9. RESPONSE ACTION DETAIL SHEET NUMBER FOR WORK TASK___74_____
10. SET-UP DETAIL SHEET NUMBERS
    FOR WORK TASK ___11_____, ____14____, ____19____, ____9A____,
    _____, _____, _____, _____.

INDIVIDUAL WORK TASK DATA ELEMENTS

TABLE 1

INDIVIDUAL WORK TASK DATA ELEMENTS

Sheet_13__ of _16__

There is a separate data sheet for each individual work task.

1. WORK TASK DESIGNATION NUMBER 4610-02
2. LOCATION OF WORK TASK_ Building 4610 Total Interior
3. BRIEF DESCRIPTION OF MATERIAL TO BE ABATED:
   _Floor tile mastic and associated floor tile_____

   a. Type of Asbestos ___Chrysotile_____
   b. Percent asbestos content ____2_____%

4. ABATEMENT TECHNIQUE TO BE USED____REM_____
5. OSHA ASBESTOS CLASS DESIGNATION FOR WORK TASK_____II_____
6. EPA NESHAP FRIABILITY DESIGNATION FOR WORK TASK
   Friable _____ Non-friable Category I __X__
   Non-friable Category II_____
7. FORM _IA_ and CONDITION OF ACM: GOOD__X__ FAIR_____ POOR_____
8. QUANTITY: METERS_____, SQUARE METERS_____
8a. QUANTITY: LINEAR FT._____, SQUARE FT.____210_____
9. RESPONSE ACTION DETAIL SHEET NUMBER FOR WORK TASK___59_____
10. SET-UP DETAIL SHEET NUMBERS
    FOR WORK TASK ____4_____, _____9A___, _____14___, ___18_____,
    ___20_____, _____22___, _____, _____.

INDIVIDUAL WORK TASK DATA ELEMENTS

Sheet_14__ of __16_

There is a separate data sheet for each individual work task.

1. WORK TASK DESIGNATION NUMBER 4620-01
2. LOCATION OF WORK TASK_ Building 4620
3. BRIEF DESCRIPTION OF MATERIAL TO BE ABATED:
   __Roof curb and wall flashing_____

   a. Type of Asbestos ____Chrysotile_____
   b. Percent asbestos content _____2_____%

4. ABATEMENT TECHNIQUE TO BE USED_____REM_____
5. OSHA ASBESTOS CLASS DESIGNATION FOR WORK TASK____II_____
6. EPA NESHAP FRIABILITY DESIGNATION FOR WORK TASK
   Friable _____ Non-friable Category I _X___
   Non-friable Category II_____
7. FORM _EA__ and CONDITION OF ACM: GOOD__X__ FAIR_____ POOR_____
8. QUANTITY: METERS_____, SQUARE METERS_____
8a. QUANTITY: LINEAR FT._____, SQUARE FT.__350_____
9. RESPONSE ACTION DETAIL SHEET NUMBER FOR WORK TASK_ 74_____
10. SET-UP DETAIL SHEET NUMBERS
    FOR WORK TASK __11_____, ___14_____, ____19____, _____9A___,
    _____, _____, _____, _____.

INDIVIDUAL WORK TASK DATA ELEMENTS

TABLE 1

INDIVIDUAL WORK TASK DATA ELEMENTS

Sheet_15__ of _16__

There is a separate data sheet for each individual work task.

1. WORK TASK DESIGNATION NUMBER _4620-02
2. LOCATION OF WORK TASK_ Building 4620 - All Rooms
3. BRIEF DESCRIPTION OF MATERIAL TO BE ABATED:
   _Floor tile and associated mastic
   a. Type of Asbestos _Chrysotile
   b. Percent asbestos content _____5_____%
4. ABATEMENT TECHNIQUE TO BE USED_____REM
5. OSHA ASBESTOS CLASS DESIGNATION FOR WORK TASK_____II
6. EPA NESHAP FRIABILITY DESIGNATION FOR WORK TASK
   Friable _____ Non-friable Category I __X__
   Non-friable Category II_____
7. FORM _IA__ and CONDITION OF ACM: GOOD__X__ FAIR_____ POOR_____
8. QUANTITY: METERS_____, SQUARE METERS_____
8a. QUANTITY: LINEAR FT._____, SQUARE FT._____1,000___
9. RESPONSE ACTION DETAIL SHEET NUMBER FOR WORK TASK_____59_____
10. SET-UP DETAIL SHEET NUMBERS
    FOR WORK TASK _____4____, _____9A___, ___14_____, ___18_____,
    ____20____, _____22___, _____, _____.

INDIVIDUAL WORK TASK DATA ELEMENTS

Sheet__16_ of __16_

There is a separate data sheet for each individual work task.

1. WORK TASK DESIGNATION NUMBER _4620-03
2. LOCATION OF WORK TASK Building 4620 - Perimeter CMU Walls
3. BRIEF DESCRIPTION OF MATERIAL TO BE ABATED:
   __Brown mastic dots
   a. Type of Asbestos __Chrysotile
   b. Percent asbestos content _____2_____%
4. ABATEMENT TECHNIQUE TO BE USED____REM
5. OSHA ASBESTOS CLASS DESIGNATION FOR WORK TASK_____II
6. EPA NESHAP FRIABILITY DESIGNATION FOR WORK TASK
   Friable _____ Non-friable Category I __X__
   Non-friable Category II_____
7. FORM _IA__ and CONDITION OF ACM: GOOD__X__ FAIR_____ POOR_____
8. QUANTITY: METERS_____, SQUARE METERS_____
8a. QUANTITY: LINEAR FT._____, SQUARE FT.____1,800_____
9. RESPONSE ACTION DETAIL SHEET NUMBER FOR WORK TASK___55_____
10. SET-UP DETAIL SHEET NUMBERS
    FOR WORK TASK _____2____, ____3_____, _____9A___, ____14____,
    ____16____, ___17_____, _____20___, ____22____.

TABLE 1

INDIVIDUAL WORK TASK DATA ELEMENTS

NOTES:

(1) Numeric sequence of individual work tasks (1,2,3,4, etc.) for each regulated area. Each category of EPA friability/OSHA class has a separate task.

(2) Specific location of work (building, floor, area, e.g., Building 1421, 2nd Floor, Rm 201)

(3) A description of material to be abated (example: horizontal pipe, cement wall panels, tile, stucco, etc.) type of asbestos (chrysotile, amosite, crocidolite, etc.); and % asbestos content.

(4) Technique to be used: Removal = REM; Encapsulation = ENCAP; Encasement = ENCAS; Enclosure = ENCL; Repair = REP.

(5) Class designation: Class I, II, III, or IV (OSHA designation).

(6) Friability of materials: Check the applicable EPA NESHAP friability designation.

(7) Form: Interior or Exterior Architectural = IA or EA; Mechanical/Electrical = ME.
Condition: Good = G; Fair = F; Poor = P.

(8) Quantity of ACM for each work task in meters or square meters.

(8a) Quantity of ACM for each work task in linear feet or square feet.

(9) Response Action Detail Sheet specifies the material to be abated and the methods to be used. There is only one Response Action Detail Sheet for each abatement task.

(10) Set-up Detail Sheets indicate containment and control methods used in support of the response action (referenced in the selected Response Action Detail Sheet).

TABLE 2

FORMULA FOR CALCULATION OF THE 95 PERCENT CONFIDENCE LEVEL
(Reference: NIOSH 7400)

Fibers/cc(01.95 percent CL) = X + [(X) * (1.645) * (CV)]

Where: X = ((E)(AC))/((V)(1000))

E = ((F/Nf) - (B/Nb))/Af

CV = The precision value; 0.45 shall be used unless the analytical laboratory provides the Contracting Officer with documentation (Round Robin Program participation and results) that the laboratory's precision is better.

AC = Effective collection area of the filter in square millimeters

V = Air volume sampled in liters

E = Fiber density on the filter in fibers per square millimeter

F/Nf = Total fiber count per graticule field

B/Nb = Mean field blank count per graticule field

Af = Graticule field area in square millimeters

TWA = C1/T1 + C2/T2 = Cn/Tn

Where: C = Concentration of contaminant

T = Time sampled.

TABLE 3

NI0SH METHOD 7400

PCM ENVIRONMENTAL AIR SAMPLING PROTOCOL (NON-PERSONAL)

Sample Location	Minimum No. of Samples	Filter Pore Size (Note 1)	Min. Vol. (Note 2) (Liters)	Sampling Rate (liters/min.)
Inside Abatement Area	0.5/140 Square Meters (Notes 3 & 4)	0.45 microns	3850	2-16
Each Room in 1 Abatement Area Less than 140 Square meters		0.45 microns	3850	2-16
Field Blank	2	0.45 microns	0	0
Laboratory Blank	1	0.45 microns	0	0

Notes:

1. Type of filter is Mixed Cellulose Ester.

2. Ensure detection limit for PCM analysis is established at 0.005 fibers/cc.

3. One sample shall be added for each additional 140 square meters. (The corresponding I-P units are 5/1500 square feet).

4. A minimum of 5 samples are to be taken per abatement area, plus 2 field blanks.

TABLE 4

EPA AHERA METHOD: TEM AIR SAMPLING PROTOCOL

Location Sampled	Minimum No. of Samples	Filter Pore Size	Min. Vol. (Liters)	Sampling Rate (liters/min.)
Inside Abatement Area	5	0.45 microns	1500	2-16
Outside Abatement Area	5	0.45 microns	1500	2-16
Field Blank	2	0.45 microns	0	0
Laboratory Blank	1	0.45 microns	0	0

Notes:

1. Type of filter is Mixed Cellulose Ester.

2. The detection limit for TEM analysis is 70 structures/square mm.

CERTIFICATE OF WORKER'S ACKNOWLEDGMENT

PROJECT NAME _____ CONTRACT NO. _____
PROJECT ADDRESS _____
CONTRACTOR FIRM NAME _____
EMPLOYEE'S NAME _____,_____,_____,
(Print) (Last) (First) (MI)

Social Security Number: _____-_____-_____,

WORKING WITH ASBESTOS CAN BE DANGEROUS. INHALING ASBESTOS FIBERS HAS BEEN LINKED WITH TYPES OF LUNG DISEASE AND CANCER. IF YOU SMOKE AND INHALE ASBESTOS FIBERS, THE CHANCE THAT YOU WILL DEVELOP LUNG CANCER IS GREATER THAN THAT OF THE NONSMOKING PUBLIC.

Your employer's contract for the above project requires that you be provided and you complete formal asbestos training specific to the type of work you will perform and project specific training; that you be supplied with proper personal protective equipment including a respirator, that you be trained in its use; and that you receive a medical examination to evaluate your physical capacity to perform your assigned work tasks, under the environmental conditions expected, while wearing the required personal protective equipment. These things are to be done at no cost to you. By signing this certification, you are acknowledging that your employer has met these obligations to you. The Contractor's Designated Industrial Hygienist will check the block(s) for the type of formal training you have completed. Review the checked blocks prior to signing this certification.

FORMAL TRAINING:
_____ a. For Competent Persons and Supervisors: I have completed EPA's Model Accreditation Program (MAP) training course, "Contractor/Supervisor", that meets this State's requirements.

b. For Workers:
_____ (1) For OSHA Class I work: I have completed EPA's MAP training course, "Worker", that meets this State's requirements.
_____ (2) For OSHA Class II work (where there will be abatement of more than one type of Class II materials, i.e., roofing, siding, floor tile, etc.): I have completed EPA's MAP training course, "Worker", that meets this State's requirements.
(3) For OSHA Class II work (there will only be abatement of one type of Class II material):
_____ (a) I have completed an 8-hour training class on the elements of 29 CFR 1926, Section .1101(k)(9)(viii), in addition to the specific work practices and engineering controls of 29 CFR 1926, Section .1101(g) and hands-on training.
_____ (b) I have completed EPA's MAP training course, "Worker", that meets this State's requirements.
_____ (4) For OSHA Class III work: I have completed at least a 16-hour course consistent with EPA requirements for training of local education agency maintenance and custodial staff at 40 CFR 763, Section .92(a)(2) and the elements of 29 CFR 1926, Section .1101(k)(9)(viii), in addition to the specific work practices and engineering controls at 29 CFR 1926, Section .1101, and hands-on training.

CERTIFICATE OF WORKER'S ACKNOWLEDGMENT

_____ (5) For OSHA Class IV work: I have completed at least a 2-hr course consistent with EPA requirements for training of local education agency maintenance and custodial staff at 40 CFR 763, (a)(1), and the elements of 29 CFR 1926, Section .1101(k)(9)(viii), in addition to the specific work practices and engineering controls at 29 CFR 1926, Section .1101(g) and hands-on training.

_____ c. Workers, Supervisors and the Designated Competent Person: I have completed annual refresher training as required by EPA's MAP that meets this State's requirements.

PROJECT SPECIFIC TRAINING:
_____ I have been provided and have completed the project specific training required by this Contract. My employer's Designated Industrial Hygienist and Designated Competent Person conducted the training.

RESPIRATORY PROTECTION:
_____ I have been trained in accordance with the criteria in the Contractor's Respiratory Protection program. I have been trained in the dangers of handling and breathing asbestos dust and in the proper work procedures and use and limitations of the respirator(s) I will wear. I have been trained in and will abide by the facial hair and contact lens use policy of my employer.

RESPIRATOR FIT-TEST TRAINING:
_____ I have been trained in the proper selection, fit, use, care, cleaning,maintenance, and storage of the respirator(s) that I will wear. I have been fit-tested in accordance with the criteria in the Contractor's Respiratory Program and have received a satisfactory fit. I have been assigned my individual respirator. I have been taught how to properly perform positive and negative pressure fit-check upon donning negative pressure respirators each time.

MEDICAL EXAMINATION:
_____ I have had a medical examination within the last twelve months which was paid for by my employer. The examination included: health history, pulmonary function tests, and may have included an evaluation of a chest x-ray. A physician made a determination regarding my physical capacity to perform work tasks on the project while wearing personal protective equipment including a respirator. I was personally provided a copy and informed of the results of that examination. My employer's Industrial Hygienist evaluated the medical certification provided by the physician and checked the appropriate blank below. The physician determined that there:

_____ were no limitations to performing the required work tasks.
_____ were identified physical limitations to performing the required work tasks.

Date of the medical examination _____

Employee Signature _____ date _____
Contractor's Industrial
Hygienist Signature _____ date _____

-- End of Section --

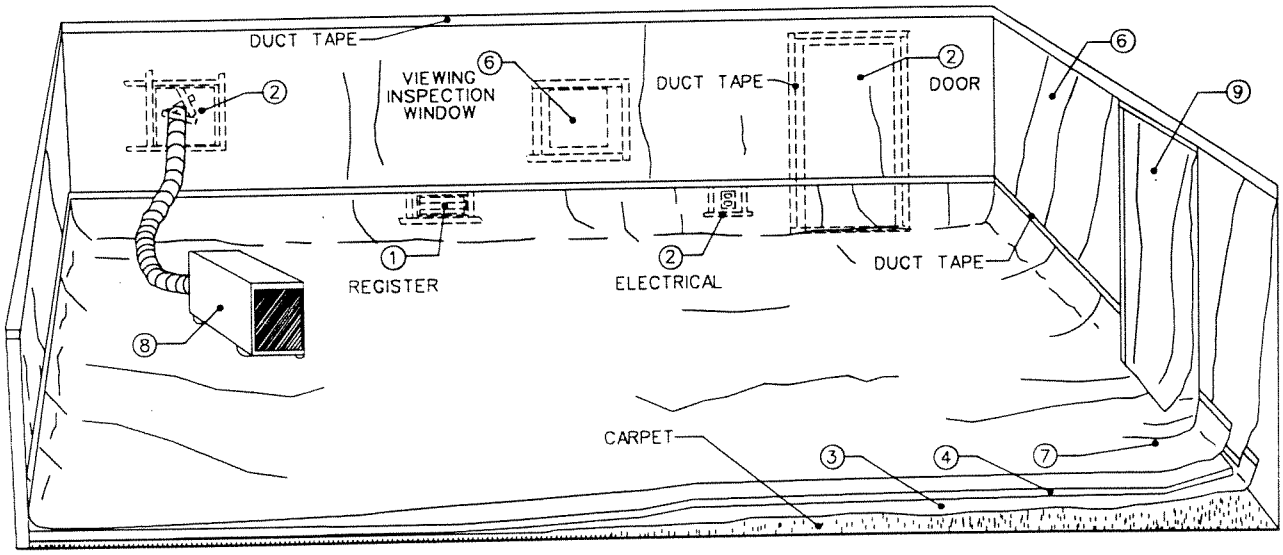

Installation of critical barrier and full containment area (for carpeted floors)

1. Establish work area so that unauthorized entry is prevented; see sheet 11. Eliminate airflow into containment area by isolating all supply and return air ducts from mechanical system. Lock doors and windows not required for access.

2. Install 6-mil polyethylene critical barriers over all windows, doors, wall openings, electrical outlets, etc. Secure with duct tape on all sides. HEPA vacuum furniture, fixtures, and equipment and remove from or protect in containment area, as specified by the contract.

3. Install first layer of 6-mil polyethylene on floor, extending the polyethylene 18 inches up wall. Secure with duct tape.

4. Install 0.5-inch plywood in order to protect 6-mil polyethylene underlay.

5. Prepare area as follows: turn off electrical power and remove light fixtures. Protect ceiling as required. HEPA vacuum plywood and walls.

6. Protect wall surface with 6-mil polyethylene from floor to ceiling where walls are not to be abated. Install viewing inspection windows, where feasible.

7. Place 6-mil polyethylene on top of plywood, extending polyethylene 18 inches up wall.

8. Install HEPA filter unit and duct work; see sheet 8.

9. Prepare door into decontamination or load-out unit. See sheet 22 for decontamination unit and sheet 20 for load-out unit. Doors that swing into the work area must be removed from hinges.

Final clearance requirements. After abatement has been completed, see sheet 16 for final clearance requirements.

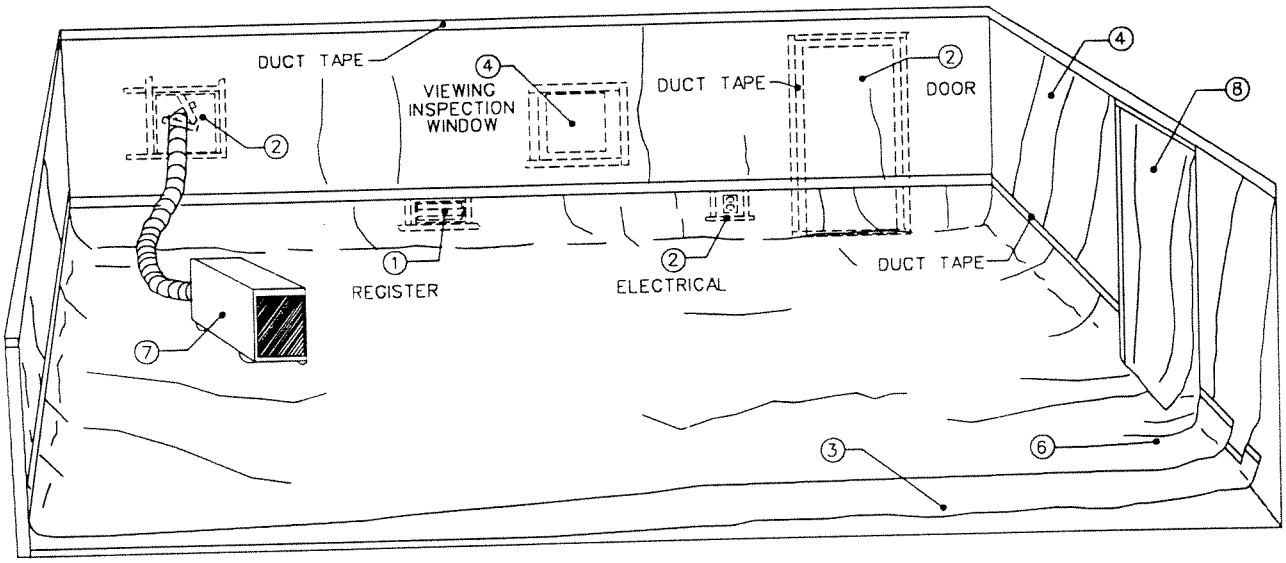

Installation of critical barrier and full containment area (for hard floor surfaces)

1. Establish work area so that unauthorized entry is prevented; see sheet 11. Eliminate airflow into containment area by isolation of all supply and return air ducts from mechanical system. Lock doors and windows not required for access.

2. Install 6-mil polyethylene critical barriers over all windows, doors, wall openings, electrical outlets, etc. Secure with duct tape on all sides. HEPA vacuum furniture, fixtures, and equipment and remove from or protect in containment area, as specified by the contract.

3. Install first layer of 6-mil polyethylene on floor, extending the polyethylene 18 inches up wall. Secure with duct tape.

4. Protect wall surface with 6-mil polyethylene from floor to ceiling. Install view inspection windows, where feasible.

5. Prepare area as follows: turn off electrical power and remove light fixtures. Protect ceiling as required. HEPA vacuum floor and walls.

6. Install top layer of 6-mil polyethylene.

7. Install HEPA filter unit and duct work; see sheet 8.

8. Prepare door into decontamination unit or load-out unit; see sheet 22 for decontamination unit and sheet 20 for load-out unit. Doors that swing into the work area must be removed from hinges.

Final clearance requirements. After abatement has been completed, see sheet 17 for final clearance requirements.

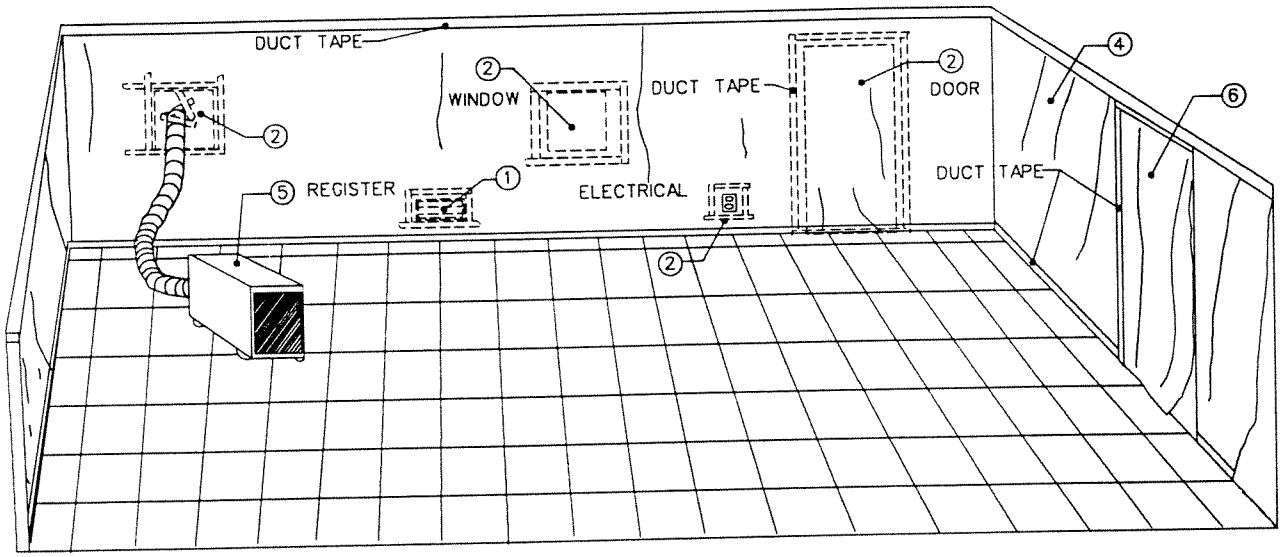

Installation of critical barrier and full containment area (for vinyl tile floors)

1. Establish work area so that unauthorized entry is prevented; see sheet 11. Eliminate airflow into containment area by isolating all supply and return air ducts from mechanical system. Lock doors and windows not required for access.

2. Install 6-mil polyethylene critical barriers over all windows, doors, wall openings, electrical outlets, etc. Secure with duct tape on all sides. HEPA vacuum furniture, fixtures, and equipment and remove from or protect in containment area, as specified by the contract.

3. Prepare area as follows: turn off electrical power and remove light fixtures. Protect ceiling as required. HEPA vacuum floors and walls.

4. Protect wall surface with 6-mil polyethylene from floor to ceiling. Install viewing inspection windows, where feasible.

5. Install HEPA filter unit and duct work; see sheet 8.

6. Prepare door into decontamination unit or load-out unit; see sheet 22 for decontamination unit and sheet 20 for load-out unit. Doors that swing into the work area must be removed from hinges.

Final clearance requirements. After abatement has been completed, see sheet 18 for final clearance requirements.

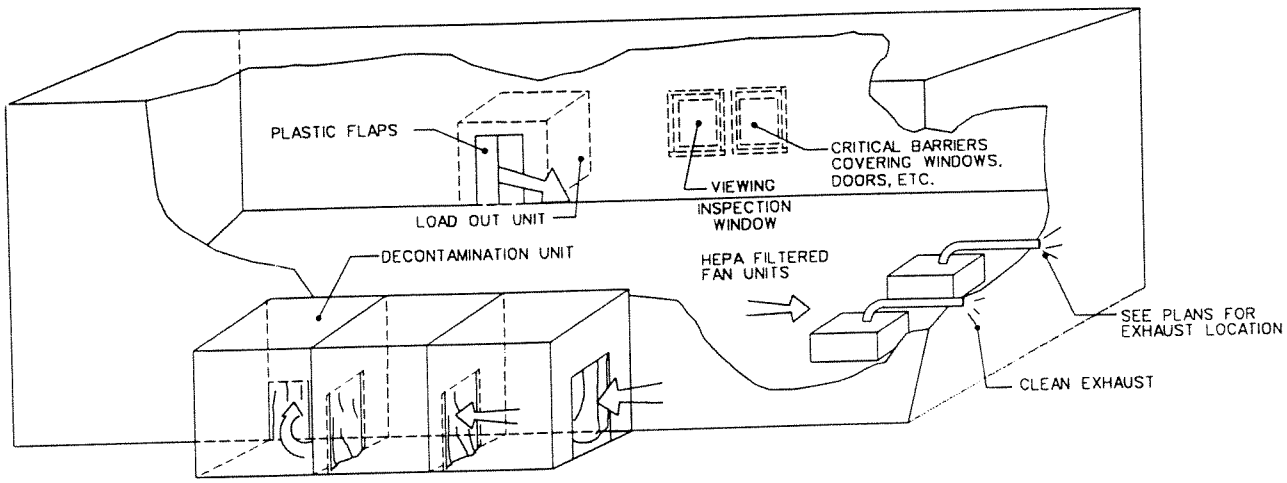

Ventilation of containment area and decontamination unit, using HEPA filters

1. Install a ventilation system in the containment area that draws the air supply through the decontamination and load-out units. See sheets 20 and 22.

2. Operate ventilation system 24 hours a day from start of abatement through final clearance.

3. Place at the decontamination unit entrance a pressure gauge that measures differential pressure between abatement and ambient areas. Gauge must be read hourly and logged or continuously recorded.

4. The ventilation system must create, as a minimum, a negative pressure of 0.02 inches of water inside the containment area (relative to the outside of the containment area) and must be sized for a minimum of four air changes per hour or more, as specified in the contractor's asbestos hazard abatement plan.

5. Locate HEPA filters in order to prevent dead air pockets.

6. Exhaust filtered air to outside of building, unless otherwise approved by the Contracting Officer.

Final clearance requirements. For final clearance, remove ventilation system upon instruction from the Contracting Officer and relocate to equipment room of decontamination unit. Thoroughly HEPA vacuum unit and ducting. Adequately wet clean all surfaces and wheels of unit(s). Collect all waste debris and unit filters, and treat as asbestos-contaminated material, placing in approved container; see sheet 9. Apply labels; see sheet 14. Dispose of waste as required by the contract. Wrap unit in one layer of 6-mil polyethylene sheeting, and seal with duct tape before removing from job location.

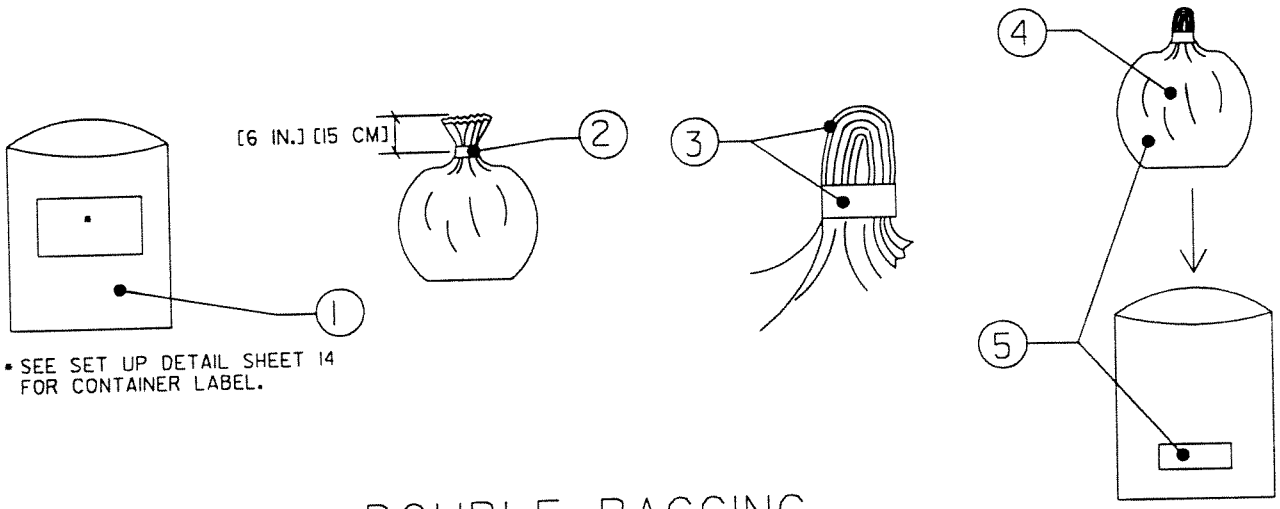

DOUBLE BAGGING

Containers—double bagging

1. Place the still-wet asbestos-containing and asbestos-contaminated material into a prelabled 6-mil polyethylene bag. Do not overfill. Do not use bag for asbestos-containing or asbestos-contaminated material that could puncture the bag. (See sheet 9C for packaging items that could puncture bags.)

2. Evacuate with HEPA vacuum, and seal collapsed bag by twisting top [6 in] [15 cm] closed and wrapping with a minimum of two layers of duct tape.

3. Twist top and fold over. Apply second wrap of duct tape.

4. Adequately wet clean outside of disposal bag by wet wiping, and take bag to the equipment and staging area.

5. Place bag inside a second prelabled 6-mil polyethylene bag.

6. Seal outer bag by repeating steps 2 and 3 above. Take bag to load-out unit; see sheet 20.

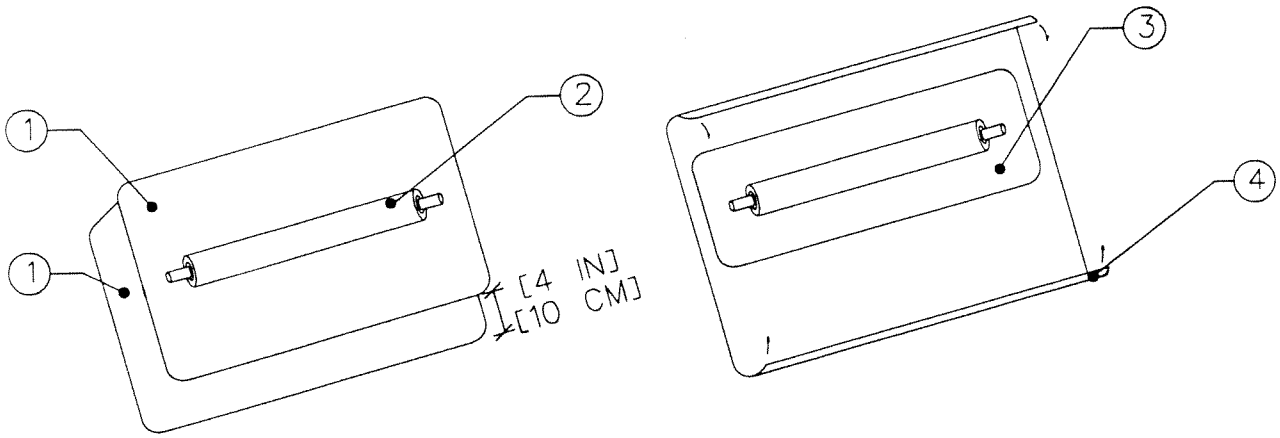

Containers—leak-tight wrapping

1. Place two layers of 6-mil polyethylene sheet on surface so that the bottom layer is offset [4 in] [10 cm] from the top layer.

2. Place the still-wet asbestos-containing or asbestos-contaminated material that is too large (boiler, vessel, pipe segment, etc.) to be placed in disposal bags on the top layer of polyethylene.

3. Wrap the top layer tightly around the contaminated material. Seal all edges of the top layer of sheeting with duct tape. Apply labels; see sheet 14.

4. Repeat procedure with bottom layer, including labeling. Take to load-out unit; see sheet 20.

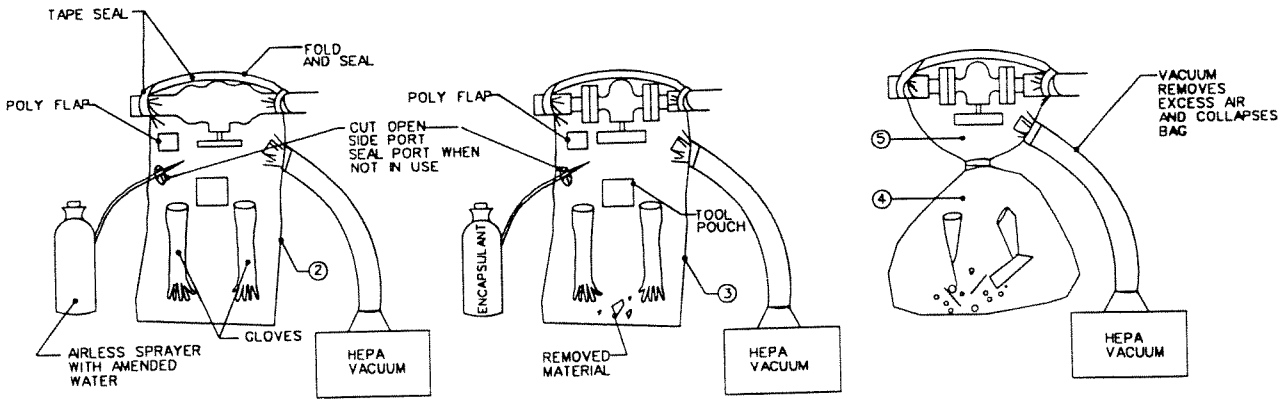

Glove bag

1. Construct modified containment area in accordance with sheet 21. NOTE: Inspect for structural integrity the insulation material adjacent to section being removed, since glove bag removal procedure is not appropriate if it will cause asbestos fiber release from adjacent asbestos-containing material.

2. Put tools and rags inside glove bag. Insulation adjacent to the asbestos-containing material being removed must be adequately wet cleaned and sprayed with an encapsulant before placing glove bag over the area to be removed. Install glove bag according to manufacturer's instructions. (NOTE: Negative-air glove bags may be used if first approved by Contracting Officer. Manufacturer procedures for negative-air glove bags will vary from procedures identified on this sheet.) Install HEPA filter vacuum cleaner with hose ducted into bag. Seal with duct tape. Smoke test for leaks. Soak insulation with amended water.

3. Remove insulation and clean exposed metal surfaces. Encapsulate exposed ends of insulation and metal surfaces. Adequately wet clean glove bag surfaces to below tool pouch.

4. Grasp tools in pouch and withdraw by pulling glove inside out. Twist glove above encased tools to create a constriction, and tape constricted area with duct tape. Cut through middle of taped area so that tools and glove bag will both remain sealed. Place encased tools into tool pouch of next glove bag or decontaminate by water immersion.

5. Evacuate glove bag, using HEPA vacuum. Twist bag to create a constriction below tool pouch. Wrap constricted area with duct tape. Cut bag [4 in] [10 cm] above constriction. Double bag cut off portion of bag; see sheet 9. Apply labels; see sheet 14. Cap and seal end of HEPA vacuum hose in order to prevent incidental fiber release.

6. Remove remaining portion of glove bag. Place in approved container; see sheet 9. Apply labels; see sheet 14. Dispose as asbestos-contaminated waste.

Final clearance requirements. For final clearance, Contractor and Contracting Officer will certify visual inspection of work area on sheet 19, *Certification of Final Cleaning and Visual Inspection*. Contract designee(s) will conduct final air-clearance monitoring as required by the contract.

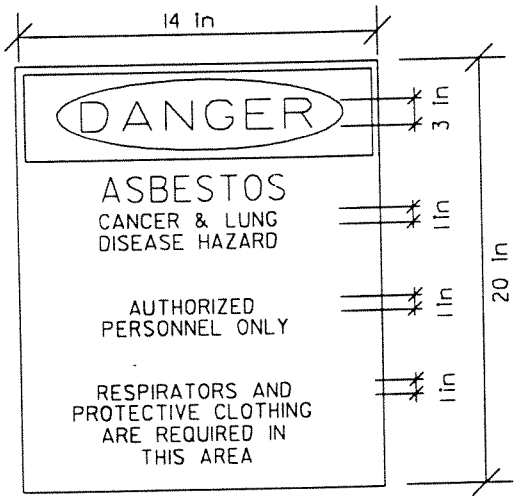

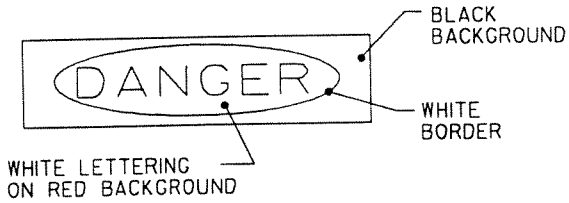

AREA WARNING SIGNS AND WARNING TAPE

DETAIL 011

Area warning signs and warning tape

1. Provide and install [4 mil] [0.10 mm] polyethylene warning tape at locations shown on the abatement area plan.

2. Warning tape is to be attached to wood or metal posts at [10 ft] [300 cm] on center. Tape must be [3 ft] [100 cm] from ground.

3. Attach both warning signs at each entrance of the work area and at [33 yd] [30 m] on center where security fencing is installed.

4. Warning signs must be in English and other languages required by the contract.

5. Install at eye level.

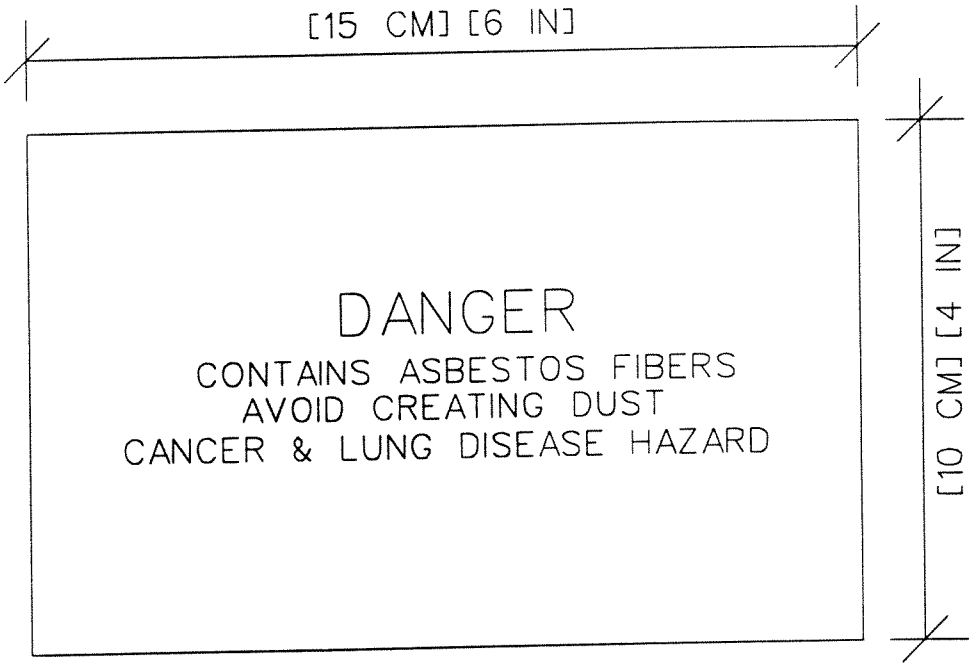

Disposal container label

Attach warning labels to each disposal container removed from abatement area.

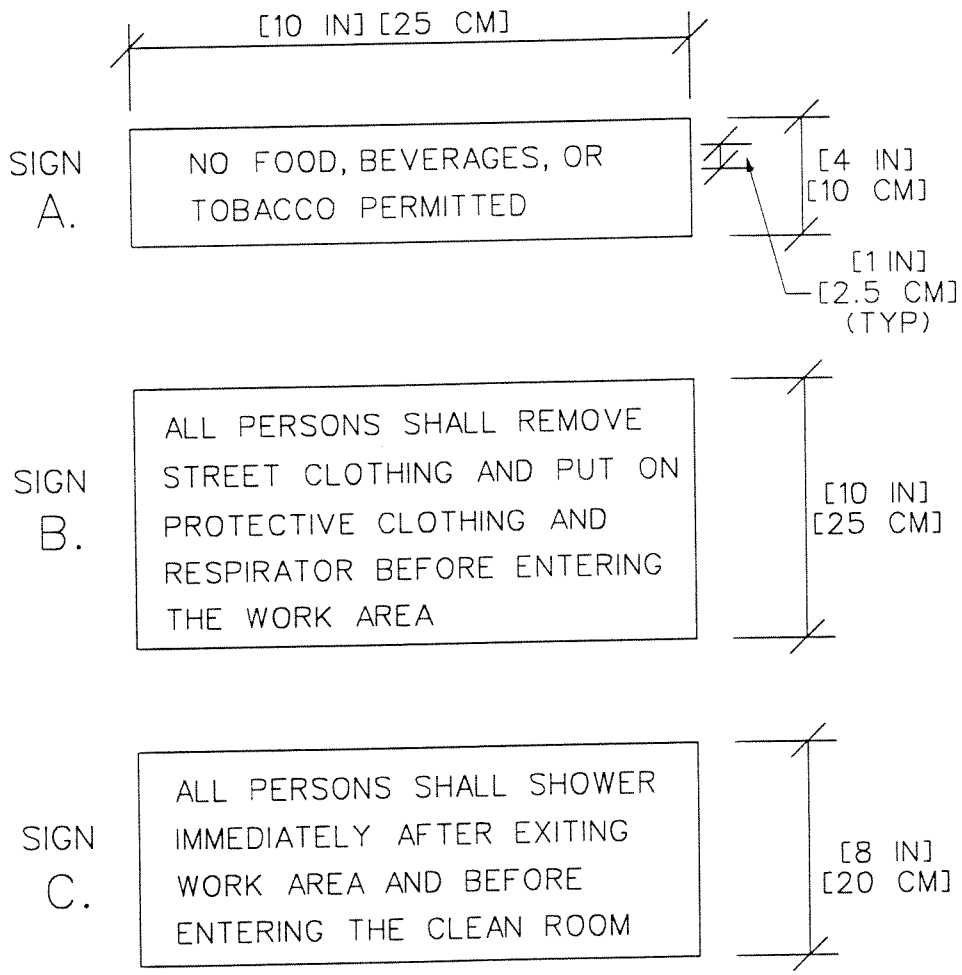

Decontamination unit signage

1. Provide signs in English and other languages required by the contract.

2. Install at eye level.

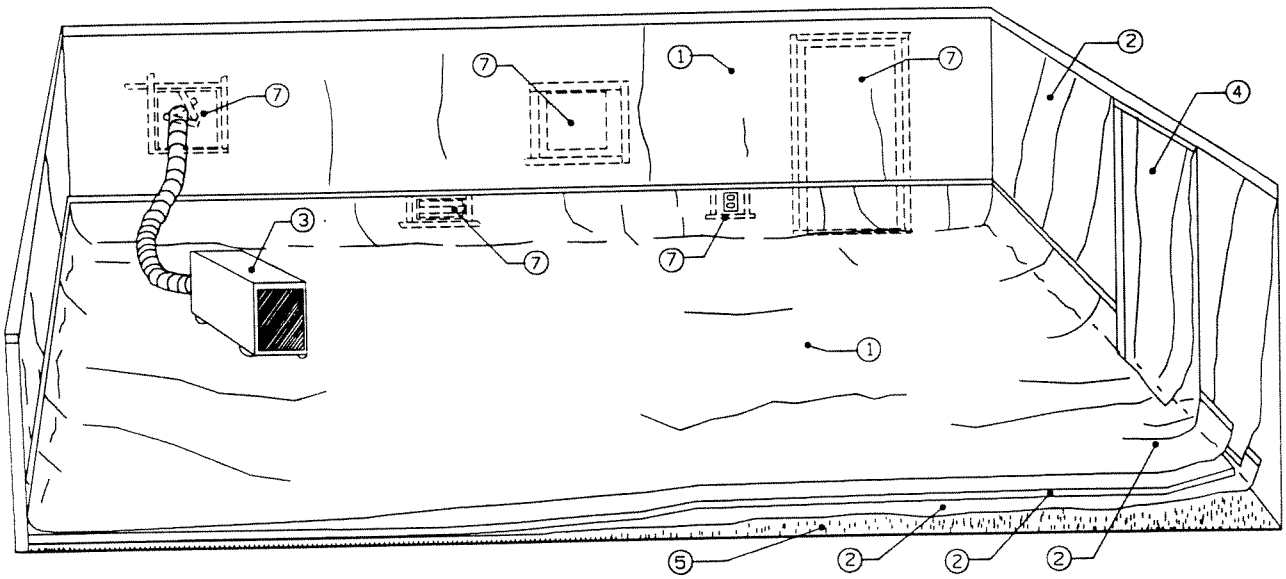

Preparation of full containment area for final clearance (for carpeted floors)

1. Accumulate all loose material for disposal. Place material in approved container; see sheet 9. Apply labels; see sheet 14. Adequately wet clean and HEPA vacuum all wall, floor, and equipment surfaces.

2. Contractor and contracting officer will certify visual inspection of work area on sheet 19, *Certification of Final Clearing and Visual Inspection.*

3. Apply lockdown encapsulant.

4. Remove polyethylene from walls, floor, and plywood. HEPA vacuum plywood before removal. Critical barriers sealing all windows, doors, wall openings, electrical outlets, etc., are to remain. Remove any temporary equipment enclosures used; see sheet 24. Treat polyethylene as asbestos-contaminated material. Place in approved container; see sheet 9 for leak-tight wrapping. Apply labels; see sheet 14. NOTE: With approval from the Contracting Officer, uncontaminated plywood can be treated as ordinary construction waste; otherwise, treat as asbestos-contaminated material.

5. HEPA filter unit remains in place and operating.

6. Door into contamination unit or load-out room remains.

7. HEPA vacuum carpet.

8. Prepare area for final clearance.

9. Contractor and Contracting Officer will recertify visual inspection of work area on sheet 19, *Certification of Final Cleaning and Visual Inspection.*

10. Contract designee(s) will conduct final air-clearance monitoring as required by the contract.

11. Upon instruction from Contracting Officer, shut down HEPA filter ventilation system, detach duct work, move system to equipment room of decontamination unit, clear and dispose of waste; see sheet 8. Remove critical barrier and place in approved container; see sheet 9. Apply labels; see sheet 14. Dispose of waste as asbestos-contaminated material.

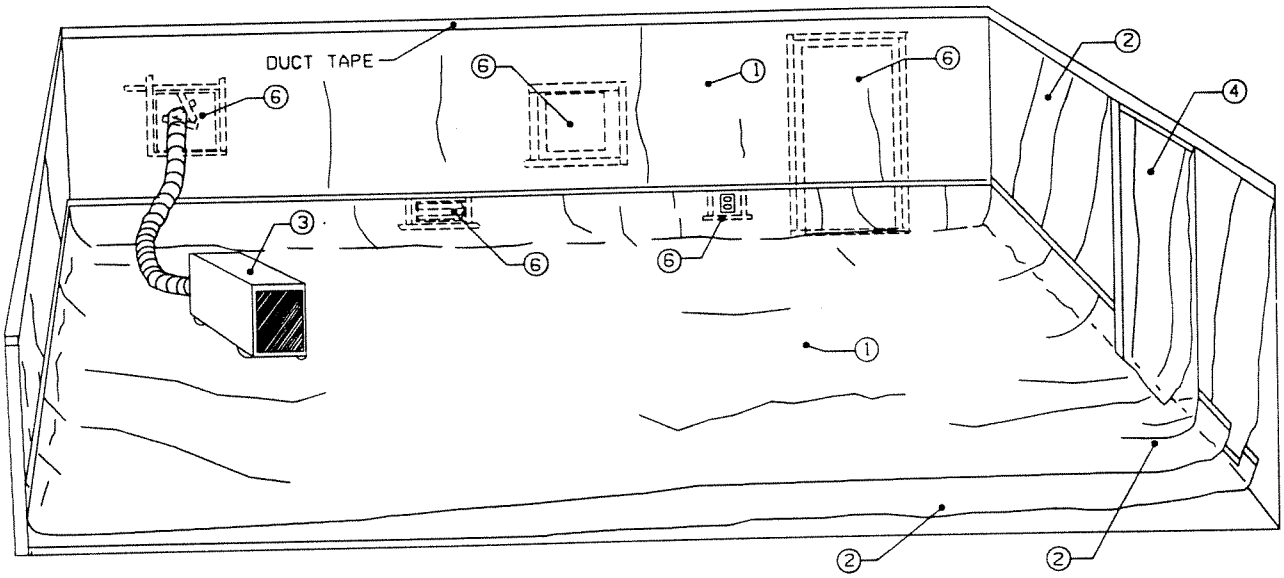

Preparation of full containment area for final clearance (for hard-surfaced floors)

1. Accumulate all loose material for disposal. Place in approved container; see sheet 9. Apply labels; see sheet 14. Adequately wet clean and HEPA vacuum all wall, floor, and equipment surfaces.

2. Contractor and contracting officer will certify visual inspection of work area on sheet 19, *Certification of Final Clearing and Visual Inspection.*

3. Apply lockdown encapsulant.

4. Remove polyethylene on walls and floor. Critical barriers sealing all windows, doors, wall openings, electrical outlets, etc., are to remain. Remove any temporary equipment enclosures used; see sheet 24. Treat polyethylene as asbestos-contaminated material. Place in approved container; see sheet 9 for leak-tight wrapping. Apply labels; see sheet 14.

5. HEPA filter unit remains in place and operating.

6. Door into decontamination unit or load-out room remains.

7. Prepare area for final clearance.

8. Contractor and Contracting Officer will recertify visual inspection of work area on sheet 19, *Certification of Final Cleaning and Visual Inspection.*

9. Contract designee(s) will conduct final air-clearance monitoring as required by the contract.

10. Upon instruction from Contracting Officer, shut down HEPA filter ventilation system, detach duct work, move system to equipment room of decontamination unit, clear and dispose of waste; see sheet 8. Remove critical barrier and place in approved container; see sheet 9. Apply labels; see sheet 14. Dispose of waste as asbestos-contaminated material.

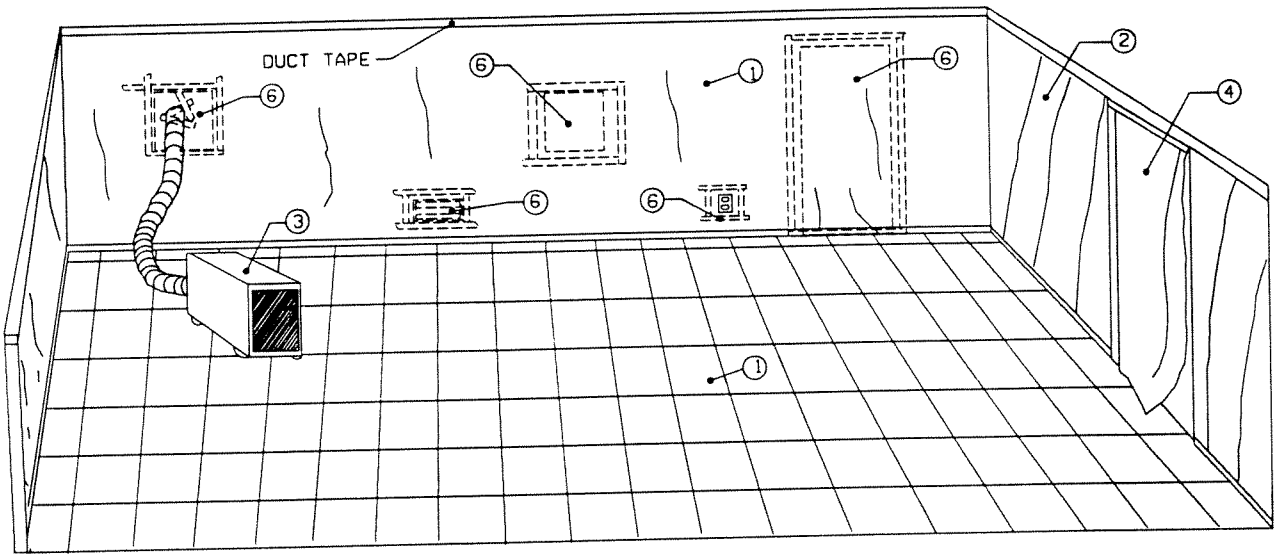

Preparation of containment area for final clearance (for vinyl tile floors)

1. Accumulate all loose material for disposal; see sheet 9. Apply labels; see sheet 14. Adequately wet clean all wall, floor, and equipment surfaces.

2. Contractor and contracting officer will certify visual inspection of work area on sheet 19, *Certification of Final Clearing and Visual Inspection.*

3. Apply lockdown encapsulant.

4. Remove polyethylene from walls. Critical barriers sealing all windows, doors, wall openings, electrical outlets, etc., are to remain. Remove any temporary equipment enclosures used; see sheet 24. Treat polyethylene as asbestos-contaminated material. Place in approved container; see sheet 9 for leak-tight wrapping. Apply labels; see sheet 14.

5. HEPA filter unit remains in place and operating.

6. Door into decontamination unit or load-out room remains.

7. Prepare area for final clearance.

8. Contractor and Contracting Officer will recertify visual inspection of work area on sheet 19, *Certification of Final Cleaning and Visual Inspection.*

9. Contract designee(s) will conduct final air-clearance monitoring as required by the contract.

10. Upon instruction from Contracting Officer, shut down HEPA filter ventilation system, detach duct work, move system to equipment room of decontamination unit, clear and dispose of waste; see sheet 8. Remove critical barrier and place in approved container; see sheet 9. Apply labels; see sheet 14. Dispose of waste as asbestos-contaminated material.

Certification of Final Cleaning And Visual Inspection

Individual abatement task as identified in paragraph, Description of Work _____

In accordance with the cleaning and decontamination procedures specified in the Contractor's asbestos hazard abatement plan and this contract, the Contractor hereby certifies that he/she has thoroughly visually inspected the decontaminated regulated work area (all surfaces, including pipes, beams, ledges, walls, ceiling, floor, decontamination unit, etc.) in accordance with ASTM E1368, *Standard Practice for Visual Inspection of Asbestos Abatement Projects*, and has found no dust, debris, or asbestos-containing material residue.

BY: (Contractor's signature) _____ Date _____

Print name and title _____

(Contractor's Onsite Supervisor signature) _____ Date _____

Print name and title _____

(Contractor's Industrial Hygienist signature) _____ Date _____

Print name and title _____

Contracting Officer Acceptance or Rejection

The Contracting Officer hereby determines that the Contractor has performed final cleaning and visual inspection of the decontaminated regulated work area (all surfaces including pipes, beams, ledges, walls, ceiling, floor, decontamination unit, etc.) and by quality assurance inspection, finds the Contractor's final cleaning to be:

☐ Acceptable

☐ Unacceptable, Contractor instructed to reclean the regulated work area.

BY: Contracting Officer's Representative

Signature _____ Date _____

Print name and title _____

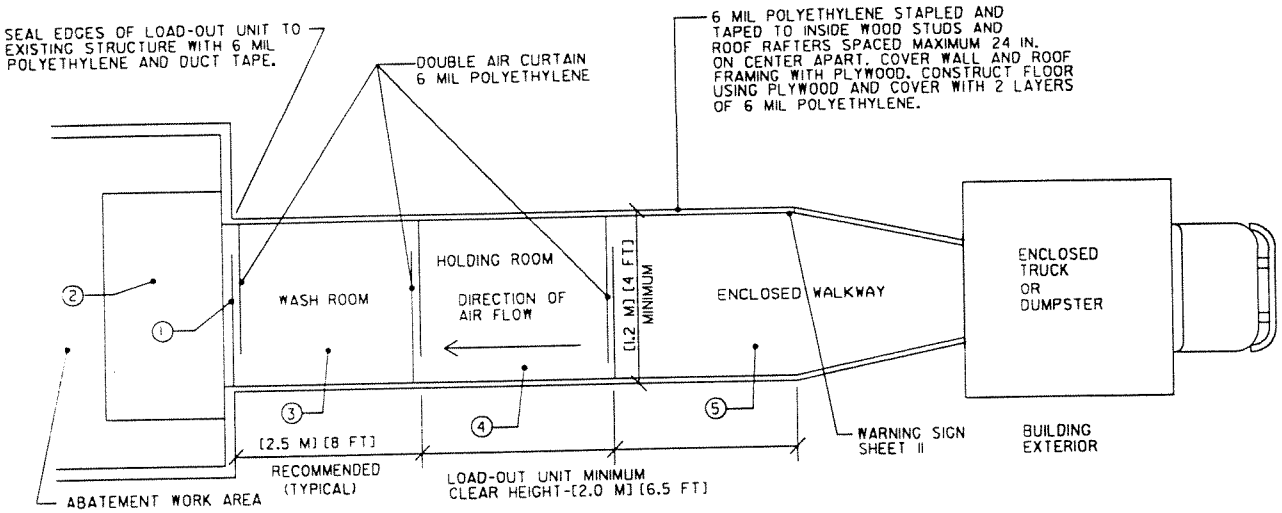

Load-out unit floor plan

1. Abatement worker is to enter and exit abatement work area only through decontamination unit.

2. Place additional 6-mil polyethylene sheeting on top of abatement area floor. Double bag asbestos-contaminated material in this area before removing.

3. Wet wipe bags, equipment, and containers, and take to holding room.

4. Stage clean bags, equipment, and containers in holding room until disposal worker removes them.

5. Disposal workers, wearing full protective clothing and appropriate respirator protection, carry decontaminated bags and containers through enclosed walkway and into enclosed truck or Dumpster.

Final clearance requirements. Before breaking down load-out unit, adequately wet clean and HEPA vacuum all surfaces and prepare area for final clearance. Contractor and Contracting Officer will certify visual inspection of work area on sheet 19, *Certification of Final Cleaning and Visual Inspection*. Contractor will apply lockdown encapsulant. Contract designee(s) will conduct final air-clearance monitoring as required by the contract. Breakdown load-out area upon instructions from Contracting Officer. Treat as asbestos- contaminated material. Place in approved container; see sheet 9. Apply labels; see sheet 14. Dispose of as required by the contract.

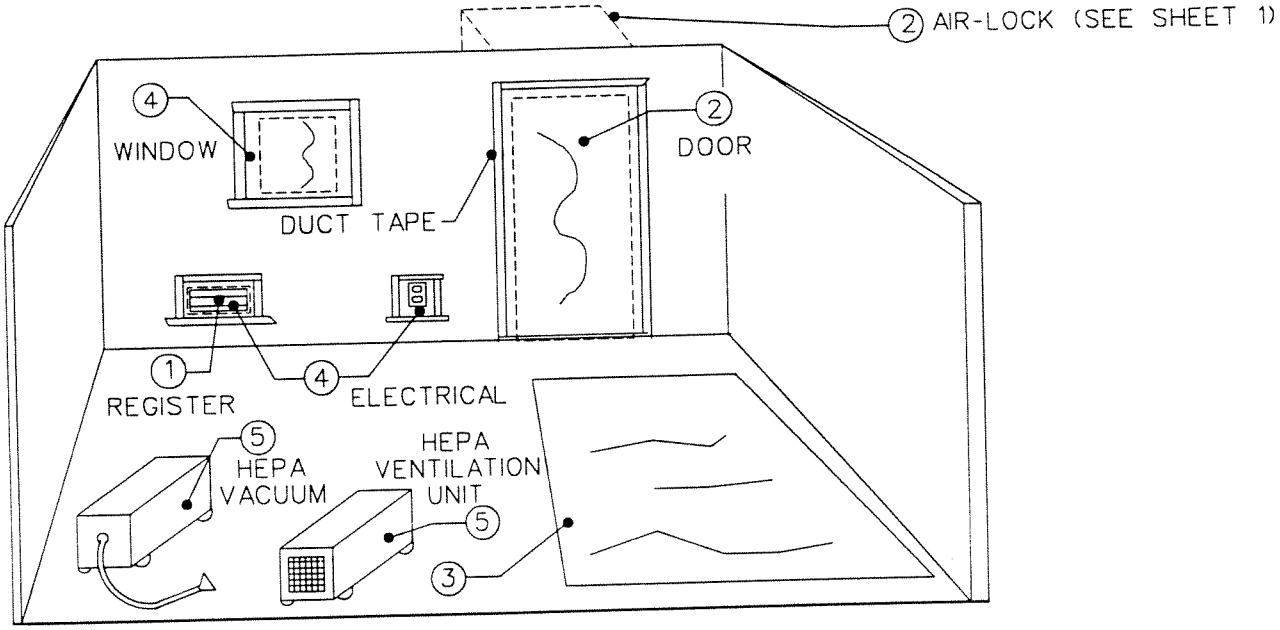

Modified containment area

1. Establish work area and prevent unauthorized entry; see sheet 11. Eliminate airflow into containment area by isolating all supply and return air ducts from mechanical system.

2. Install air lock at entrance to abatement area; see sheet 1. Air lock may be constructed either outside or inside of room. NOTE: Air lock is not required for glove bag operations.

3. Install 6-mil polyethylene sheet on floor under work area.

4. Install 6-mil polyethylene (critical barrier) over all windows, doors, wall openings, electrical outlets, etc. Provide airtight seal, using duct tape.

5. Provide a HEPA-filter vacuum cleaner and a HEPA-filter ventilation system in the work area; see sheet 8. The ventilation system does not have to be ducted to the outside of the structure. The ventilation system shall operate 24 hours a day from start of abatement through final air-clearance monitoring. The ventilation system shall be sized to recirculate the air a minimum of four air changes per hour. For glove bag operations, provide a single HEPA ventilation unit with a measured capture velocity at least 1,500 cfm.

6. Accumulate all loose material and polyethylene from floor. Place in approved container; see sheet 9. Apply labels; see sheet 14. HEPA vacuum and adequately wet clean all wall, floor, and equipment surfaces.

Final clearance requirements. Abatement worker must wear two disposable suits. Remove outer suit in the work area. Place suit in 6-mil disposal bag; see sheet 9. Enter air lock. In air lock, wet wipe respirator and wash hands with clean water from portable sprayer. Remove respirator and place in clean plastic bag. Proceed to remote shower where inner suit may be removed. Prepare work area and air lock for final clearance. Contractor and Contracting Officer will certify visual inspection of work area on sheet 19, *Certification of Final Cleaning and Visual Inspection*. Contract designee(s) will conduct final air-clearance monitoring as required by the contract. Upon instructions from the Contracting Officer, remove critical barriers and HEPA ventilation units; see sheet 8. Treat polyethylene as asbestos-contaminated material. Place in approved container; see sheet 9. Apply labels; see sheet 14. Dispose of as required by the contract.

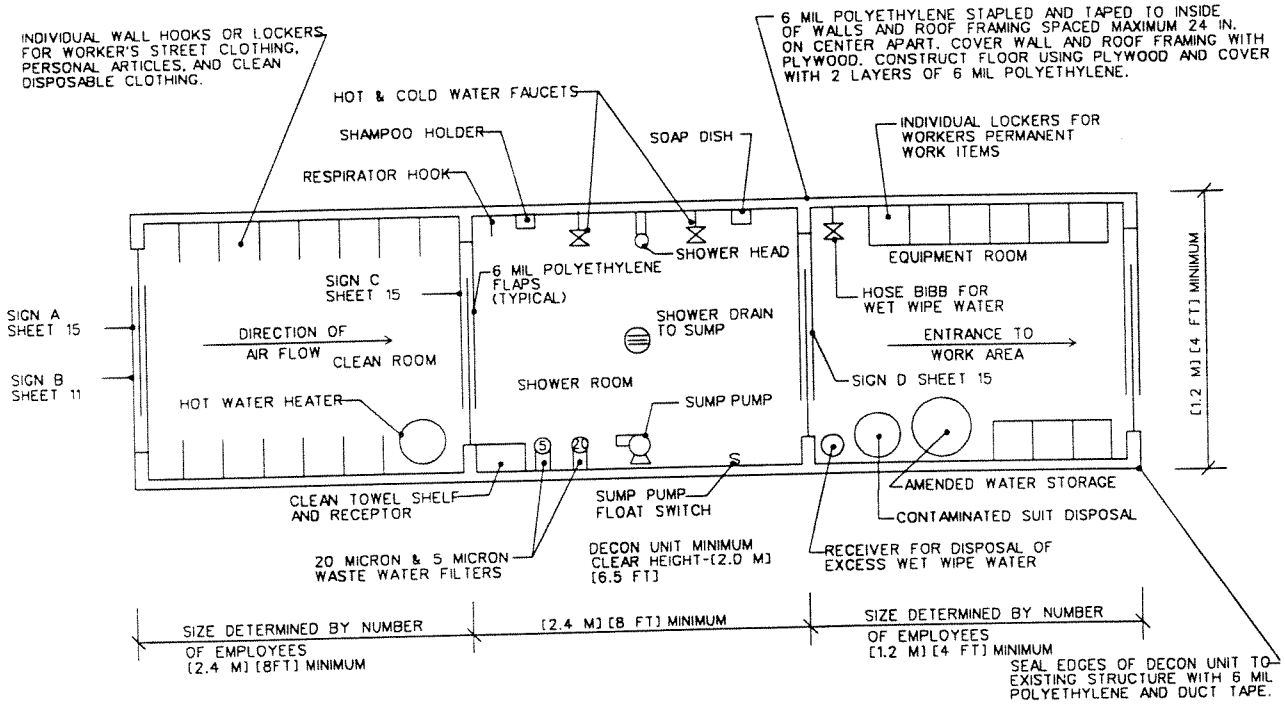

Decontamination unit floor plan

1. Establish work area so that unauthorized entry is prevented; see sheets 11 and 15. Before entering the work area, all personnel shall remove their street clothing in the clean room and put on protective clothing and respirator.

2. Whenever exiting the work area, all personnel shall:

- Vacuum clothing and shoes outside equipment room.
- Remove all clothing and equipment (except respirator) in equipment room.
- Store work shoes and equipment in locker.
- With respirator still on, shower thoroughly, including hair. Then remove respirator and finish shower.
- Proceed to clean room and put on street clothes.

3. See sheet 23 for minimum plumbing requirements, including wastewater filtration. Ensure that plumbing and specified filter size meet local requirements.

4. Twice daily, or more often if necessary, and before breaking down decontamination unit after abatement, adequately wet clean and HEPA vacuum all wall, floor, equipment, and other surfaces. Waste collected in shower room and equipment room shall be treated as asbestos-contaminated material. Place in approved container; see sheet 9. Apply labels; see sheet 14.

5. Prepare for final clearance.

Final clearance requirements. Contractor and Contracting Officer will certify visual inspection of work area on sheet 19, *Certification of Final Cleaning and Visual Inspection*. Contract designee(s) will conduct final air-clearance monitoring as required by the contract. If the unit is not a prefabricated decontamination unit, apply lockdown encapsulant before final air-clearance monitoring. After approval of final air clearance, break down and treat polyethylene as asbestos-contaminated material. Place in approved container; see sheet 9. Apply labels; see sheet 14. Dispose of as required by the contract.

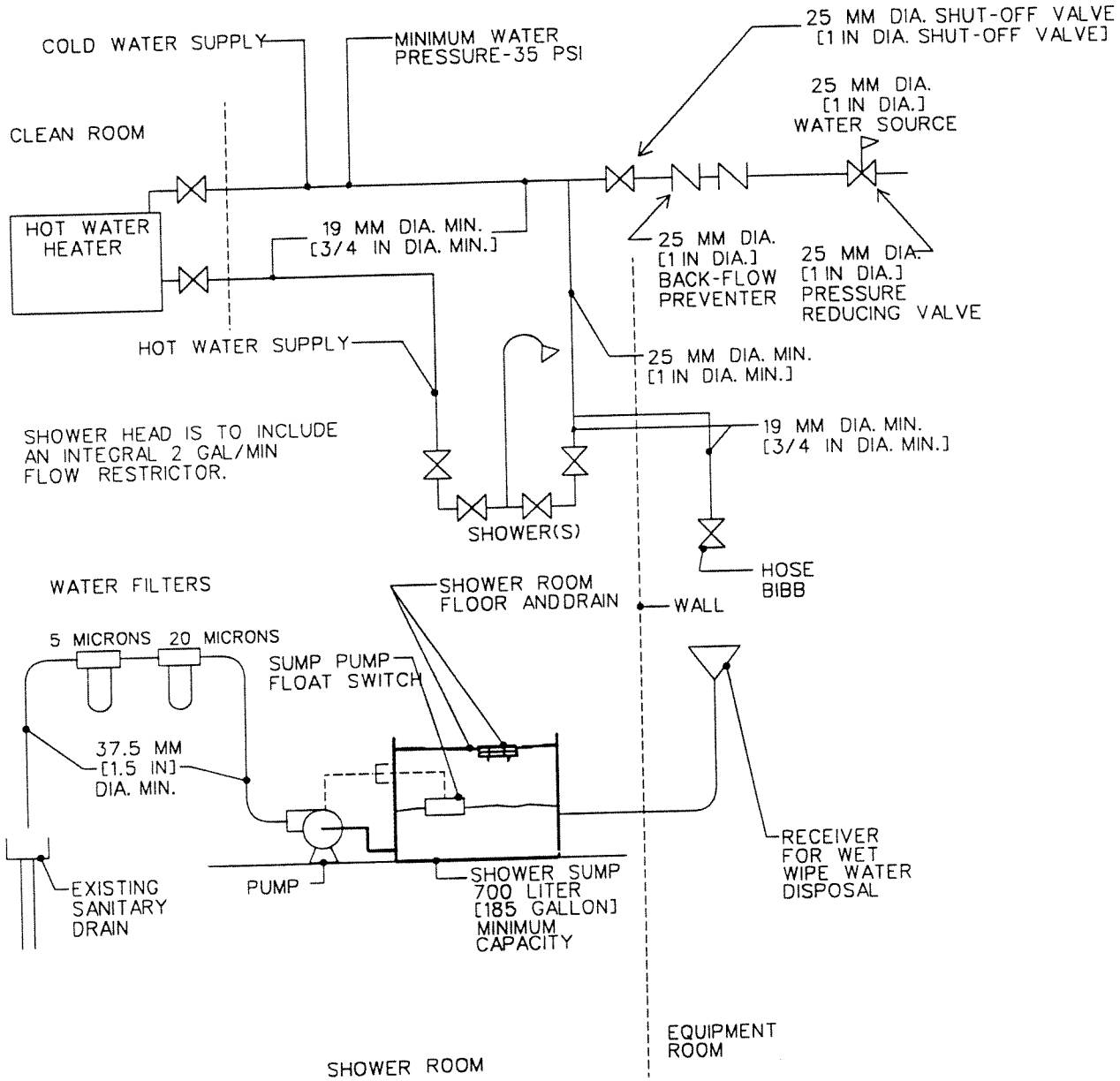

SIZE CAPACITY OF SUMP PUMP FOR TWICE THE EXPECTED WASTE WATER FLOW.

Decontamination unit piping details

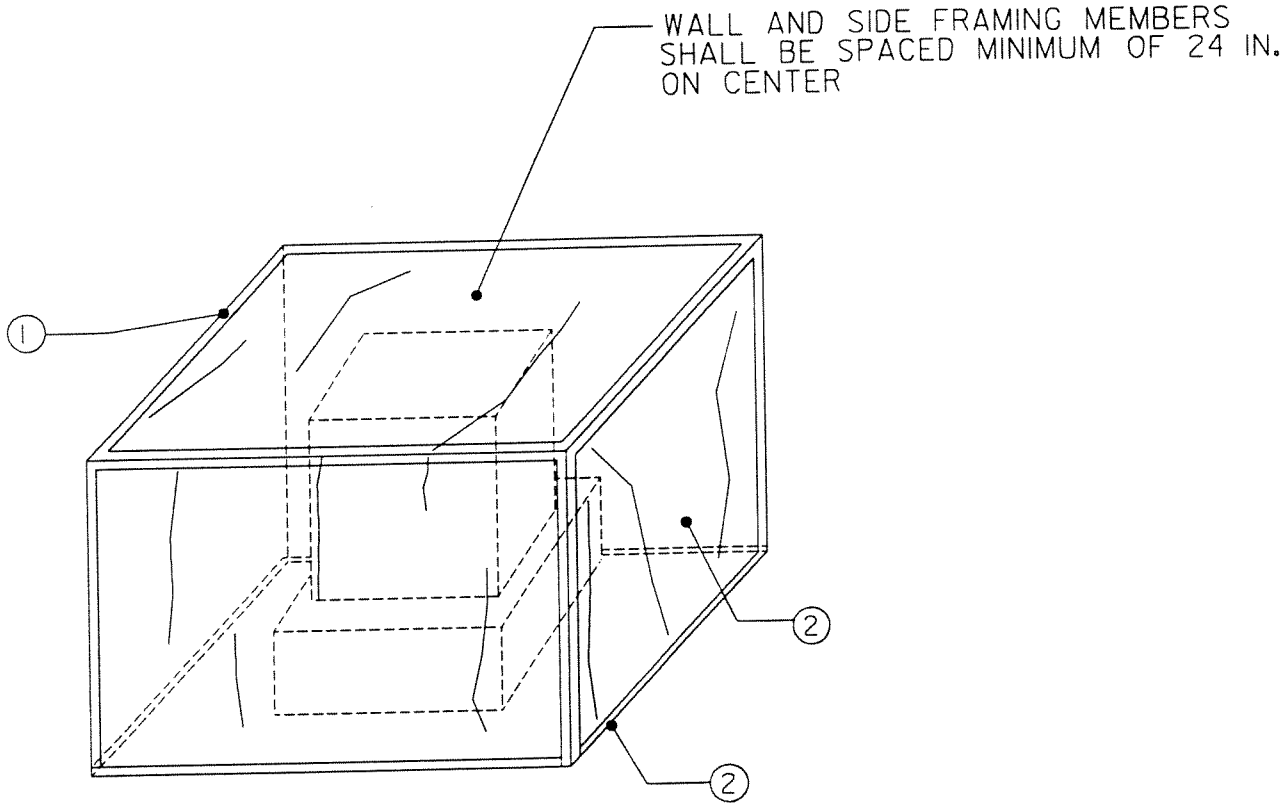

Temporary equipment enclosure

1. Construct wood frame of equipment enclosure; then cover all sides and the roof of frame with plywood.

2. Cover entire plywood equipment enclosure with 6-mil polyethylene. Seal seams and edges with duct tape, making the enclosure airtight and watertight.

Final clearance requirements. Upon completion of abatement work, remove temporary enclosure in accordance with the procedures listed on sheet 16, 17, or 18, and prepare for final clearance.

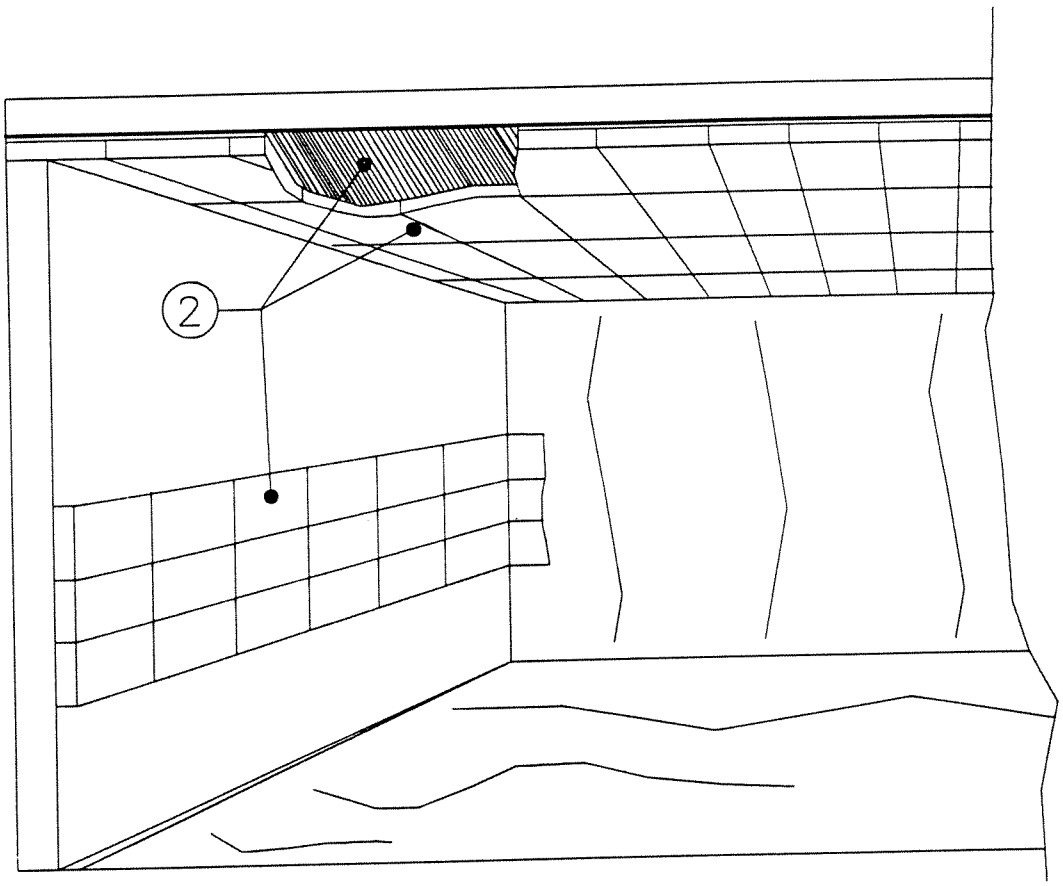

Removal of glued-on acoustical ceiling and wall tile

1. Prepare containment area as specified on applicable sheet 2, 3, or 4.

2. Adequately wet mist tile surfaces with amended water, initially and during removal procedures.

3. Remove glued-on tiles, and scrape off remaining glue.

4. Clean, HEPA vacuum, and adequately wet clean.

5. Separate and stack all materials, and wrap with two layers of 6-mil polyethylene. Wrap top layer of polyethylene around ACM. Seal the joints and ends of each layer with duct tape; see sheet 9B. Apply labels; see sheet 14. Wrap again with second layer of polyethylene in the same manner; see sheet 9B. Apply labels; see sheet 14. Place smaller material in approved container; see sheet 9B. Apply labels; see sheet 14.

6. Inspect and reclean area as necessary.

7. Apply tinted penetrating encapsulant. Inspect and reapply as necessary.

8. Prepare area for final clearance.

9. Carry out final clearance requirements specified on applicable sheet 16, 17, or 18.

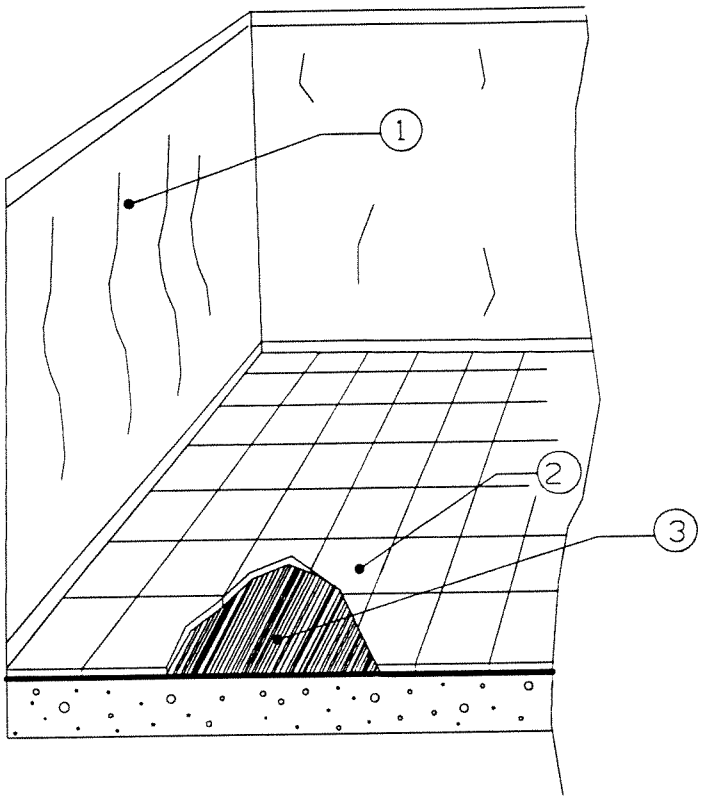

USE THIS DETAIL ONLY FOR
- SMALL SCALE PROJECTS
- GROUND FLOOR APPLICATIONS

Removal of vinyl asbestos tile and chemical dissolution of asbestos-containing adhesives on concrete floor system

1. Prepare containment area as specified on sheet 4.

2. Lightly flood asbestos tile, and soak for 48 hours. Remove asbestos tile and adhesive while they are wet in order to prevent asbestos fiber release. Place tile and adhesive into an approved container; see sheet 9. Apply labels; see sheet 14.

3. Before removing adhesive, increase ventilation rate to 10 air changes per hour. Air must be exhausted outside building.

4. Apply liquid adhesive remover. As soon as the adhesive is soft enough to scrape, remove and put into approved container; see sheet 9. Apply labels; see sheet 14.

5. Prepare area for final air clearance.

6. Carry out final clearance requirements as specified on sheet 18.

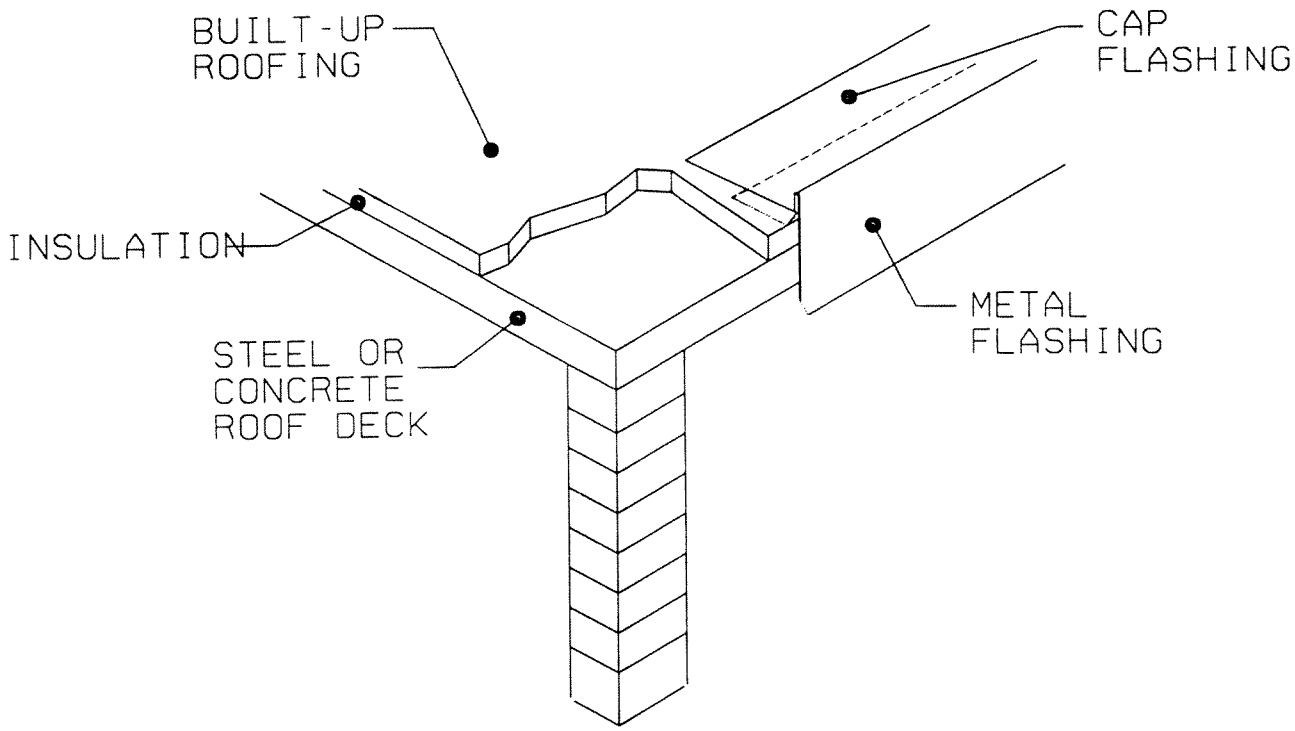

Removal of built-up roofing and flashing

1. No containment area is required. Establish boundaries of asbestos-regulated work area so that unauthorized entry is prevented; see sheet 11. Provide personal protection and decontamination facilities as specified in contractor's asbestos hazard abatement plan.

2. Remove accumulated debris.

3. Adequately wet mist flashing and built-up roofing, initially and during removal procedures. Remove flashing and built-up roofing.

4. Dispose of all materials by carefully sliding them down an enclosed chute into an enclosed Dumpster or truck that is lined with two layers of 6-mil polyethylene. When the Dumpster or truck is filled, fold the polyethylene edges over each other and seal with duct tape; see sheet 9 for leak-tight wrapping. Apply labels; see sheet 14.

5. Clean and HEPA vacuum roof.

6. Inspect and reclean area as necessary.

7. Apply tinted penetrating encapsulant to exposed roof deck, using an airless sprayer. Inspect and reapply encapsulant as necessary.

8. Prepare area for final clearance.

9. Contractor and contracting officer will certify visual inspection of work area on sheet 19, *Certification of Final Cleaning and Visual Inspection*.

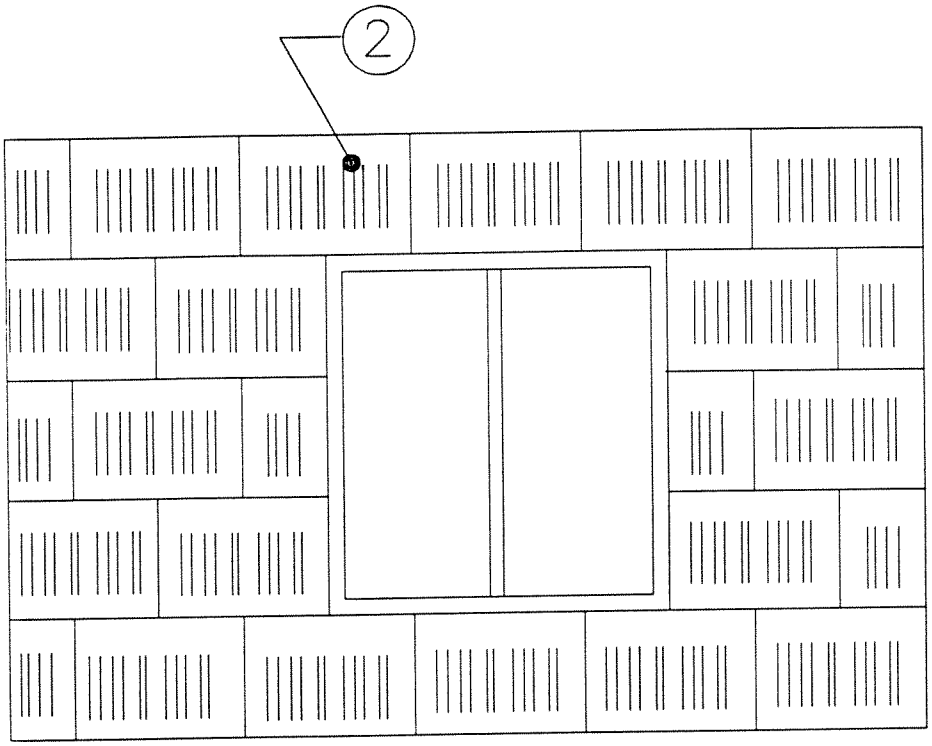

Removal of asbestos cement siding

1. No containment area is required. Establish boundaries of asbestos-regulated work area so that unauthorized entry is prevented; see sheet 11. Provide personal protection and decontamination facilities as specified in contractor's asbestos hazard abatement plan.

2. Wet mist siding with amended water, initially and during removal procedures.

3. Anchor 10-mil polyethylene sheeting below work area. Remove siding in a manner that will prevent crumbling, pulverizing, or reducing to powder during the removal procedure. NOTE: Normal breakage does not constitute crumbling, pulverizing, or reducing to powder.

4. Clean and HEPA vacuum all surfaces.

5. Inspect and reclean area as necessary.

6. Place all materials in Dumpster or other transport container lined with two layers of 6-mil polyethylene. Seal the joints and ends of each layer with duct tape; see sheet 9. Apply labels; see sheet 14. Other containers may be used; see sheet 9. Apply labels; see sheet 14.

7. Prepare area for final clearance.

8. Contractor and contracting officer will certify visual inspection of work area on sheet 19, *Certification of Final Cleaning and Visual Inspection*.

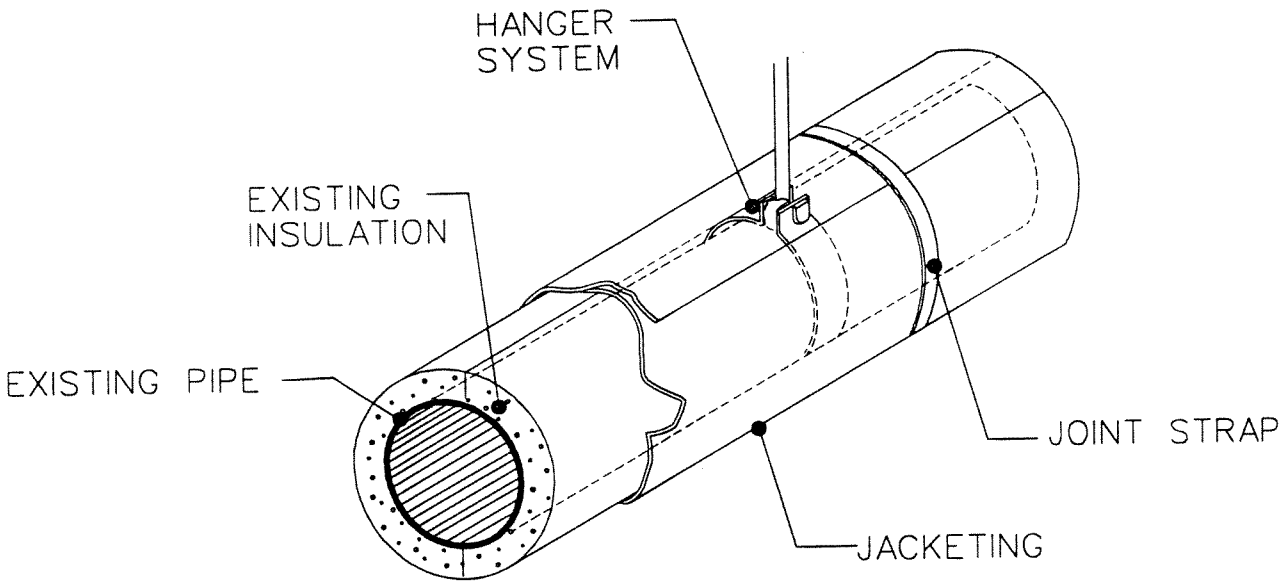

NOTE: THIS SHEET CAN BE USED FOR VERTICAL OR HORIZONTAL PIPING.

Removal of pipe insulation (using glove bag)

1. Install glove bag as specified on sheet 10. Prepare modified containment area as specified on sheet 21. Adequately wet mist insulation surface with amended water, initially and during removal.

2. Remove jacketing and asbestos pipe insulation from pipe and hanger to within 2 inches of inside edges of glove bag.

3. Clean exposed surfaces by spraying with amended water and brushing.

4. Inspect and reclean as necessary.

5. Spray a tinted penetrating encapsulant on pipe and exposed ends of insulation.

6. Inspect piping and reapply encapsulant as necessary.

7. Prepare area for final air clearance.

8. Carry out final clearance requirements specified on sheets 10 and 21.

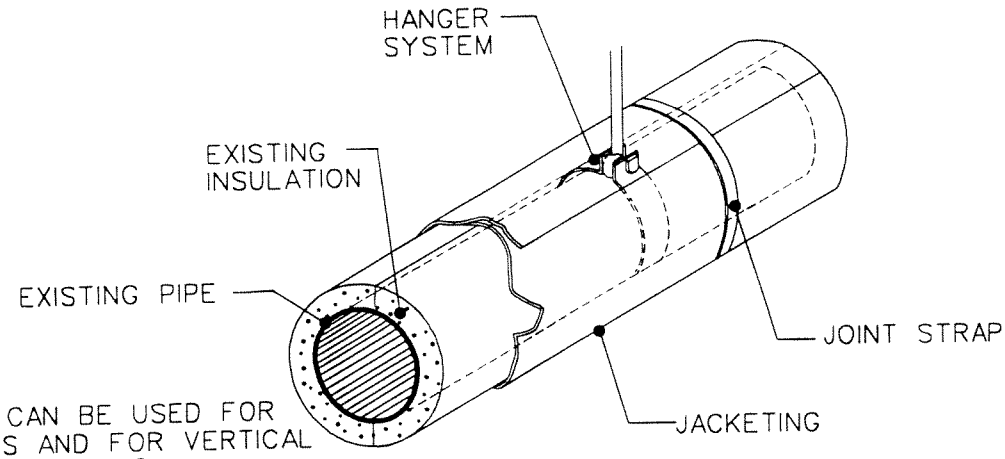

NOTE: THIS SHEET CAN BE USED FOR PIPE FITTINGS AND FOR VERTICAL OR HORIZONTAL PIPING.

Removal of horizontal pipe insulation (using containment area)

1. Prepare containment area as specified on applicable sheet 2, 3, or 4.

2. Adequately wet mist insulation surface with amended water, initially and during removal. Remove jacketing and insulation from pipe and hanger system.

3. Clean exposed surfaces by spraying with amended water and brushing.

4. Inspect and reclean as necessary.

5. Spray a tinted penetrating encapsulant on pipe and exposed ends of insulation.

6. Inspect piping and reapply encapsulant as necessary.

7. Prepare area for final air clearance.

8. Carry out final clearance requirements specified on applicable sheet 16, 17, or 18.

SECTION TABLE OF CONTENTS

DIVISION 13 - SPECIAL CONSTRUCTION

SECTION 13851A

FIRE DETECTION AND ALARM SYSTEM, ADDRESSABLE

02/02

PART 1 GENERAL

1.1 REFERENCES
1.2 SUBMITTALS
1.3 GENERAL REQUIREMENTS
1.3.1 Standard Products
1.3.2 Nameplates
1.3.3 Keys and Locks
1.3.4 Tags
1.3.5 Verification of Dimensions
1.3.6 Compliance
1.3.7 Qualifications
1.3.7.1 Engineer and Technician
1.3.7.2 Installer
1.3.7.3 Design Services
1.4 SYSTEM DESIGN
1.4.1 Operation
1.4.2 Operational Features
1.4.3 Alarm Functions
1.4.4 Primary Power
1.4.5 Battery Backup Power
1.4.6 Interface With Other Fire Alarm Equipment
1.4.7 Interface With other Equipment
1.5 TECHNICAL DATA AND COMPUTER SOFTWARE
1.6 DELIVERY AND STORAGE

PART 2 PRODUCTS

2.1 CONTROL PANEL
2.1.1 Remote System Audible/Visual Display
2.1.2 Circuit Connections
2.1.3 System Expansion and Modification Capabilities
2.1.4 Addressable Control Module
2.1.5 Omitted
2.2 STORAGE BATTERIES
2.3 BATTERY CHARGER
2.4 ADDRESSABLE MANUAL FIRE ALARM STATIONS
2.5 FIRE DETECTING DEVICES
2.5.1 Heat Detectors
2.5.1.1 Omitted
2.5.1.2 Omitted
2.5.1.3 Fixed Temperature Detectors
2.5.2 Smoke Detectors
2.5.2.1 Omitted
2.5.2.2 Photoelectric Detectors
2.5.2.3 Omitted

2.5.2.4 Duct Detectors
2.5.3 Omitted
2.5.4 Omitted
2.6 NOTIFICATION APPLIANCES
2.6.1 Omitted
2.6.2 Alarm Horns
2.6.3 Omitted
2.6.4 Visual Notification Appliances
2.6.5 Combination Audible/Visual Notification Appliances
2.6.6 Omitted
2.7 FIRE DETECTION AND ALARM SYSTEM PERIPHERAL EQUIPMENT
2.7.1 Electromagnetic Door Hold-Open Devices
2.7.2 Conduit
2.7.3 Wiring
2.7.4 Special Tools and Spare Parts
2.8 TRANSMITTERS
2.8.1 Radio Alarm Transmitters
2.8.1.1 Transmitter Power Supply
2.8.1.2 Radio Alarm Transmitter Housing
2.8.1.3 Antenna
2.8.2 Omitted
2.8.3 Omitted

PART 3 EXECUTION

3.1 INSTALLATION
3.1.1 Power Supply for the System
3.1.2 Wiring
3.1.3 Control Panel
3.1.4 Detectors
3.1.5 Notification Appliances
3.1.6 Annunciator Equipment
3.1.7 Addressable Initiating Device Circuits Module
3.1.8 Addressable Control Module
3.2 OVERVOLTAGE AND SURGE PROTECTION
3.2.1 Power Line Surge Protection
3.2.2 Low Voltage DC Circuits Surge Protection
3.2.3 Signal Line Circuit Surge Protection
3.3 GROUNDING
3.4 SUPERVISING STATION PROVISIONS
3.5 TESTING
3.5.1 Preliminary Tests
3.5.2 Acceptance Test
3.6 TRAINING

-- End of Section Table of Contents --

SECTION 13851A

FIRE DETECTION AND ALARM SYSTEM, ADDRESSABLE
02/02

PART 1 GENERAL

1.1 REFERENCES

The publications listed below form a part of this specification to the extent referenced. The publications are referred to in the text by basic designation only.

AMERICAN NATIONAL STANDARDS INSTITUTE (ANSI)

ANSI S3.41	(1990; R 1996) Audible Emergency Evacuation Signal

INSTITUTE OF ELECTRICAL AND ELECTRONICS ENGINEERS (IEEE)

IEEE C62.41	(1991; R 1995) Surge Voltages in Low-Voltage AC Power Circuits

NATIONAL FIRE PROTECTION ASSOCIATION (NFPA)

NFPA 1221	(1999) Installation, Maintenance and Use of Public Fire Service Communication Systems
NFPA 70	(2002) National Electrical Code
NFPA 72	(2002
NFPA 90A	(1999) Installation of Air Conditioning and Ventilating Systems

U.S. NATIONAL ARCHIVES AND RECORDS ADMINISTRATION (NARA)

47 CFR 15	Radio Frequency Devices

UNDERWRITERS LABORATORIES (UL)

UL 1242	(1996; Rev Mar 1998) Intermediate Metal Conduit
UL 1971	(1995; Rev thru Apr 1999) Signaling Devices for the Hearing Impaired
UL 228	(1997; Rev Jan 1999) Door Closers-Holders, With or Without Integral Smoke Detectors
UL 268	(1996; Rev thru Jan 1999) Smoke Detectors for Fire Protective Signaling Systems
UL 268A	(1998) Smoke Detectors for Duct Application

UL 38	(1999) Manually Actuated Signaling Boxes for Use with Fire-Protective Signaling Systems
UL 464	(1996; Rev thru May 1999) Audible Signal Appliances
UL 521	(1999) Heat Detectors for Fire Protective Signaling Systems
UL 6	(1997) Rigid Metal Conduit
UL 797	(1993; Rev thru Mar 1997) Electrical Metallic Tubing
UL 864	(1996; Rev thru Mar 1999) Control Units for Fire Protective Signaling Systems

1.2 SUBMITTALS

Government approval is required for submittals with a "G" designation; submittals not having a "G" designation are for information only. When used, a designation following the "G" designation identifies the office that will review the submittal for the Government. The following shall be submitted in accordance with Section 01330 SUBMITTAL PROCEDURES:

SD-02 Shop Drawings

Fire Alarm Reporting System; G|RE

Detail drawings, prepared and signed by a Registered Professional Engineer or a NICET Level 3 Fire Alarm Technician, consisting of a complete list of equipment and material, including manufacturer's descriptive and technical literature, catalog cuts, and installation instructions. Note that the contract drawings show layouts based on typical detectors. The Contractor shall check the layout based on the actual detectors to be installed and make any necessary revisions in the detail drawings. The detail drawings shall also contain complete wiring and schematic diagrams for the equipment furnished, equipment layout, and any other details required to demonstrate that the system has been coordinated and will properly function as a unit. Detailed point-to-point wiring diagram shall be prepared and signed by a Registered Professional Engineer or a NICET Level 3 Fire Alarm Technician showing points of connection. Diagram shall include connections between system devices, appliances, control panels, supervised devices, and equipment that is activated or controlled by the panel.

SD-03 Product Data

Storage Batteries; G|RE

Substantiating battery calculations for supervisory and alarm power requirements. Ampere-hour requirements for each system component and each panel component, and the battery recharging period shall be included.

Voltage Drop; G|RE

Voltage drop calculations for notification appliance circuits to indicate that sufficient voltage is available for proper appliance operation.

Special Tools and Spare Parts; G|RE

Spare parts data for each different item of material and equipment specified, not later than 3 months prior to the date of beneficial occupancy. Data shall include a complete list of parts and supplies with the current unit prices and source of supply and a list of the parts recommended by the manufacturer to be replaced after 1 year of service.

Technical Data and Computer Software; G|RE

Technical data which relates to computer software.

Training; G|RE

Lesson plans, operating instructions, maintenance procedures, and training data, furnished in manual format, for the training courses. The operations training shall familiarize designated government personnel with proper operation of the fire alarm system. The maintenance training course shall provide the designated government personnel adequate knowledge required to diagnose, repair, maintain, and expand functions inherent to the system.

Testing; G|RE

Detailed test procedures, prepared and signed by a Registered Professional Engineer or a NICET Level 4 Fire Alarm Technician, for the fire detection and alarm system 60 days prior to performing system tests.

SD-06 Test Reports

Testing; G|RE

Test reports, in booklet form, showing field tests performed to prove compliance with the specified performance criteria, upon completion and testing of the installed system. Each test report shall document readings, test results and indicate the final position of controls. The Contractor shall include the NFPA 72 Certificate of Completion and NFPA 72 Inspection and Testing Form, with the appropriate test reports.

SD-07 Certificates

Equipment

Certified copies of current approvals or listings issued by an independent test lab if not listed by UL, FM or other nationally recognized testing laboratory, showing compliance with specified NFPA standards.

Qualifications; G|RE

Proof of qualifications for required personnel. The installer shall submit proof of experience for the Professional Engineer, fire alarm technician, and the installing company.

SD-10 Operation and Maintenance Data

Technical Data and Computer Software; G|RE

Six copies of operating manual outlining step-by-step procedures required for system startup, operation, and shutdown. The manual shall include the manufacturer's name, model number, service manual, parts list, and complete description of equipment and their basic operating features. Six copies of maintenance manual listing routine maintenance procedures, possible breakdowns and repairs, and troubleshooting guide. The manuals shall include conduit layout, equipment layout and simplified wiring, and control diagrams of the system as installed. The manuals shall include complete procedures for system revision and expansion, detailing both equipment and software requirements. Original and backup copies of all software delivered for this project shall be provided, on each type of media utilized. Manuals shall be approved prior to training.

1.3 GENERAL REQUIREMENTS

1.3.1 Standard Products

Material and equipment shall be the standard products of a Monaco Enterprises and regularly engaged in the manufacture of the products for at least 2 years prior to bid opening. Equipment shall be supported by a service organization that can provide service within 24 hours of notification. All components of the fire alarm system, including but not limited to software, programming, re-programming, system passwords, and maintenance methods, shall be configured such that Base personnel can perform required actions on system without outside service providers assistance or permission. Provide parts and price lists for all components and sources for all procurement of parts shall be provided in Operations and Maintenance manual.

1.3.2 Nameplates

Major components of equipment shall have the manufacturer's name, address, type or style, voltage and current rating, and catalog number on a noncorrosive and nonheat-sensitive plate which is securely attached to the equipment.

1.3.3 Keys and Locks

Locks shall be keyed alike. Four keys for the system shall be provided.

1.3.4 Tags

Tags with stamped identification number shall be furnished for keys and locks.

1.3.5 Verification of Dimensions

After becoming familiar with details of the work, the Contractor shall

verify dimensions in the field and shall advise the Contracting Officer of any discrepancy before performing the work.

1.3.6 Compliance

The fire detection and alarm system and the central reporting system shall be configured in accordance with NFPA 72; exceptions are acceptable as directed by the Contracting Officer. The equipment furnished shall be compatible and be UL listed, FM approved, or approved or listed by a nationally recognized testing laboratory in accordance with the applicable NFPA standards.

1.3.7 Qualifications

1.3.7.1 Engineer and Technician

a. Registered Professional Engineer with verification of experience and at least 4 years of current experience in the design of the fire protection and detection systems.

b. National Institute for Certification in Engineering Technologies (NICET) qualifications as an engineering technician in fire alarm systems program with verification of experience and current NICET certificate.

c. The Registered Professional Engineer may perform all required items under this specification. The NICET Fire Alarm Technician shall perform only the items allowed by the specific category of certification held.

1.3.7.2 Installer

The installing Contractor shall provide the following: NICET Fire Alarm Technicians to perform the installation of the system. A NICET Level 3 Fire Alarm Technician shall supervise the installation of the fire alarm system. NICET Level 2 or higher Fire Alarm Technician shall install and terminate fire alarm devices, cabinets and panels. An electrician or NICET Level 1 Fire Alarm Technician shall install conduit for the fire alarm system. The Fire Alarm technicians installing the equipment shall be factory trained in the installation, adjustment, testing, and operation of the equipment specified herein and on the drawings.

1.3.7.3 Design Services

Installations requiring designs or modifications of fire detection, fire alarm, or fire suppression systems shall require the services and review of a qualified fire protection engineer. For the purposes of meeting this requirement, a qualified fire protection engineer is defined as an individual meeting one of the following conditions:

a. An engineer having a Bachelor of Science or Masters of Science Degree in Fire Protection Engineering from an accredited university engineering program, plus a minimum of 2 years' work experience in fire protection engineering.

b. A registered professional engineer (P.E.) in fire protection engineering.

c. A registered PE in a related engineering discipline and member grade status in the National Society of Fire Protection Engineers.

d. An engineer with a minimum of 10 years' experience in fire protection engineering and member grade status in the National Society of Fire Protection Engineers.

1.4 SYSTEM DESIGN

1.4.1 Operation

The fire alarm and detection system shall be a complete, supervised fire alarm reporting system. The system shall be activated into the alarm mode by actuation of any alarm initiating device. The system shall remain in the alarm mode until the initiating device is reset and the fire alarm control panel is reset and restored to normal. Alarm initiating devices shall be connected, to signal line circuits (SLC), Style 6, in accordance with NFPA 72. Alarm notification appliances shall be connected to notification appliance circuits (NAC), Style Z in accordance with NFPA 72. A looped conduit system shall be provided so that if the conduit and all conductors within are severed at any point, all NAC and SLC will remain functional. The conduit loop requirement is not applicable to the signal transmission link from the local panels (at the protected premises) to the Supervising Station (fire station, fire alarm central communication center). Textual, audible, and visual appliances and systems shall comply with NFPA 72. Fire alarm system components requiring power, except for the control panel power supply, shall operate on 24 Volts dc. Addressable system shall be microcomputer (microprocessor or microcontroller) based with a minimum word size of eight bits and shall provide the following features:

a. Sufficient memory to perform as specified and as shown for addressable system.

b. Individual identity of each addressable device for the following conditions: alarm; trouble; open; short; and appliances missing/failed remote detector - sensitivity adjustment from the panel for smoke detectors

c. Capability of each addressable device being individually disabled or enabled from the panel.

d. Each SLC shall be sized to provide 40 percent addressable expansion without hardware modifications to the panel.

1.4.2 Operational Features

The system shall have the following operating features:

a. Monitor electrical supervision of SLC, and NAC. Smoke detectors shall have combined alarm initiating and power circuits.

b. Monitor electrical supervision of the primary power (ac) supply, battery voltage, placement of alarm zone module (card, PC board) within the control panel, and transmitter tripping circuit integrity.

c. A trouble buzzer and trouble LED/LCD (light emitting diode/liquid crystal diode) to activate upon a single break, open, or ground fault condition which prevents the required normal operation of the system. The trouble signal shall also operate upon loss of

primary power (ac) supply, low battery voltage, removal of alarm zone module (card, PC board), and disconnection of the circuit used for transmitting alarm signals off-premises. A trouble alarm silence switch shall be provided which will silence the trouble buzzer, but will not extinguish the trouble indicator LED/LCD. Subsequent trouble and supervisory alarms shall sound the trouble signal until silenced. After the system returns to normal operating conditions, the trouble buzzer shall again sound until the silencing switch returns to normal position, unless automatic trouble reset is provided.

d. A one person test mode. Activating an initiating device in this mode will activate an alarm for a short period of time, then automatically reset the alarm, without activating the transmitter during the entire process.

e. A transmitter disconnect switch to allow testing and maintenance of the system without activating the transmitter but providing a trouble signal when disconnected and a restoration signal when reconnected.

f. Evacuation alarm silencing switch which, when activated, will silence alarm devices, but will not affect the zone indicating LED/LCD nor the operation of the transmitter. This switch shall be over-ridden upon activation of a subsequent alarm from an unalarmed device and the NAC devices will be activated.

g. Electrical supervision for circuits used for supervisory signal services (i.e., sprinkler systems, valves, etc.). Supervision shall detect any open, short, or ground.

h. Confirmation or verification of all smoke detectors. The control panel shall interrupt the transmission of an alarm signal to the system control panel for a factory preset period. This interruption period shall be adjustable from 1 to 60 seconds and be factory set at 20 seconds. Immediately following the interruption period, a confirmation period shall be in effect during which time an alarm signal, if present, will be sent immediately to the control panel. Fire alarm devices other than smoke detectors shall be programmed without confirmation or verification.

i. The fire alarm control panel shall provide supervised addressable relays for HVAC shutdown. An override at the HVAC panel shall not be provided.

j. Provide one person test mode - Activating an initiating device in this mode will activate an alarm for a short period of time, then automatically reset the alarm, without activating the transmitter during the entire process.

k. The fire alarm control panel shall monitor the fire sprinkler system, or other fire protection extinguishing system.

l. The control panel and field panels shall be software reprogrammable to enable expansion or modification of the system without replacement of hardware or firmware. Examples of required changes are: adding or deleting devices or zones; changing system responses to particular input signals; programming certain input

signals to activate auxiliary devices.

1.4.3 Alarm Functions

An alarm condition on a circuit shall automatically initiate the following functions:

a. Transmission of signals over the station radio fire reporting system. The signal shall be common for any device.

b. Visual indications of the alarmed devices on the fire alarm control panel display and on the remote audible/visual display.

c. Continuous sounding or operation of alarm notification appliances throughout the building as required by ANSI S3.41.

d. Omitted.

e. Omitted.

f. Deactivation of the air handling units throughout the building.

g. Omitted.

h. Omitted.

1.4.4 Primary Power

Operating power shall be provided as required by paragraph Power Supply for the System. Transfer from normal to emergency power or restoration from emergency to normal power shall be fully automatic and not cause transmission of a false alarm. Loss of ac power shall not prevent transmission of a signal via the fire reporting system upon operation of any initiating circuit.

1.4.5 Battery Backup Power

Battery backup power shall be through use of rechargeable, sealed-type storage batteries and battery charger.

1.4.6 Interface With Other Fire Alarm Equipment

The new equipment shall be connected to the central reviewing equipment installed at the Main Fire Station as part of this contract. New components shall be capable of merging with the central receiving configuration without degrading the performance of either system. The scope of the acceptance tests of paragraph Testing shall include aspects of operation that involve combined use of all and existing portions of the final configuration.

1.4.7 Interface With other Equipment

Interfacing components shall be furnished as required to connect to subsystems or devices which interact with the fire alarm system, such as supervisory or alarm contacts in suppression systems, operating interfaces for smoke control systems, door releases, etc.

1.5 TECHNICAL DATA AND COMPUTER SOFTWARE

Technical data and computer software (meaning technical data which relates to computer software) which is specifically identified in this project, and which may be defined/required in other specifications, shall be delivered, strictly in accordance with the CONTRACT CLAUSES, and in accordance with the Contract Data Requirements List, DD Form 1423. Data delivered shall be identified by reference to the particular specification paragraph against which it is furnished. Data to be submitted shall include complete system, equipment, and software descriptions. Descriptions shall show how the equipment will operate as a system to meet the performance requirements of this contract. The data package shall also include the following:

(1) Identification of programmable portions of system equipment and capabilities.

(2) Description of system revision and expansion capabilities and methods of implementation detailing both equipment and software requirements.

(3) Provision of operational software data on all modes of programmable portions of the fire alarm and detection system.

(4) Description of Fire Alarm Control Panel equipment operation.

(5) Description of auxiliary and remote equipment operations.

(6) Library of application software.

(7) Operation and maintenance manuals as specified in SD-19 of the Submittals paragraph.

1.6 DELIVERY AND STORAGE

Equipment delivered and placed in storage shall be stored with protection from the weather, humidity and temperature variation, dirt, dust, and any other contaminants.

PART 2 PRODUCTS

2.1 CONTROL PANEL

Control Panel shall comply with the applicable requirements of UL 864. Panel shall be modular, installed in a surface mounted steel cabinet with hinged door and cylinder lock. Control panel shall be a clean, uncluttered, and orderly assembled panel containing components and equipment required to provide the specified operating and supervisory functions of the system. The panel shall have prominent rigid plastic, phenolic or metal identification plates for LED/LCDs, zones, SLC, controls, meters, fuses, and switches. Nameplates for fuses shall also include ampere rating. The LED/LCD displays shall be located on the exterior of the cabinet door or be visible through the cabinet door. Control panel switches shall be within the locked cabinet. A suitable means (single operation) shall be provided for testing the control panel visual indicating devices (meters or LEDs/LCDs). Meters and LEDs shall be plainly visible when the cabinet door is closed. Signals and LEDs/LCDs shall be provided to indicate by zone any alarm, supervisory or trouble condition on the system. Each SLC shall be powered and supervised so that a signal on one zone does not prevent the receipt of signals from other devices. Loss

of power, including batteries, shall not require the manual reloading of a program. Upon restoration of power, startup shall be automatic, and shall not require any manual operation. The loss of primary power or the sequence of applying primary or emergency power shall not affect the transmission of alarm, supervisory or trouble signals. Visual annunciation shall be provided for LED/LCD visual display as an integral part of the control panel and shall identify with a word description and id number each device. Cabinets shall be provided with ample gutter space to allow proper clearance between the cabinet and live parts of the panel equipment. If more than one modular unit is required to form a control panel, the units shall be installed in a single cabinet large enough to accommodate units. Cabinets shall be painted red.

2.1.1 Remote System Audible/Visual Display

Audible appliance shall have a minimum sound level output rating of 85 dBA at 10 feet and operate in conjunction with the panel integral display. The audible device shall be silenced by a system silence switch on the remote system. The audible device shall be silenced by the system silence switch located at the remote location, but shall not extinguish the visual indication. The remote LED/LCD visual display shall provide identification, consisting of the word description and id number for each device as displayed on the control panel. A rigid plastic, phenolic or metal identification sign which reads "Fire Alarm System Remote Display" shall be provided at the remote audible/visual display. The remote visual appliance located with the audible appliance shall not be extinguished until the trouble or alarm has been cleared.

2.1.2 Circuit Connections

Circuit conductors entering or leaving the panel shall be connected to screw-type terminals with each conductor and terminal marked for identification.

2.1.3 System Expansion and Modification Capabilities

Any equipment and software needed by qualified technicians to implement future changes to the fire alarm system shall be provided as part of this contract.

2.1.4 Addressable Control Module

The control module shall be capable of operating as a relay (dry contact form C) for interfacing the control panel with other systems and to control door holders. The module shall be UL listed as compatible with the control panel. The indicating device or the external load being controlled shall be configured as a Style Y notification appliance circuits. The system shall be capable of supervising, audible, visual and dry contact circuits. The control module shall have both an input and output address. The supervision shall detect a short on the supervised circuit and shall prevent power from being applied to the circuit. The control model shall provide address setting means compatible with the control panel's SLC supervision and store an internal identifying code. The control module shall contain an integral LED that flashes each time the control module is polled.

2.1.5 Omitted

2.2 STORAGE BATTERIES

Storage batteries shall be provided and shall be 24 Vdc sealed, lead-calcium type requiring no additional water. The batteries shall have ample capacity, with primary power disconnected, to operate the fire alarm system for a period of 72 hours. Following this period of battery operation, the batteries shall have ample capacity to operate all components of the system, including all alarm signaling devices in the total alarm mode for a minimum period of 15 minutes. Batteries shall be located at the bottom of the panel. Batteries shall be provided with overcurrent protection in accordance with NFPA 72. Separate battery cabinets shall have a lockable, hinged cover similar to the fire alarm panel. The lock shall be keyed the same as the fire alarm control panel. Cabinets shall be painted to match the fire alarm control panel.

2.3 BATTERY CHARGER

Battery charger shall be completely automatic, 24 Vdc with high/low charging rate, capable of restoring the batteries from full discharge (18 Volts dc) to full charge within 48 hours. A pilot light indicating when batteries are manually placed on a high rate of charge shall be provided as part of the unit assembly, if a high rate switch is provided. Charger shall be located in control panel cabinet or in a separate battery cabinet.

2.4 ADDRESSABLE MANUAL FIRE ALARM STATIONS

Addressable manual fire alarm stations shall conform to the applicable requirements of UL 38. Manual stations shall be connected into signal line circuits. Stations shall be installed on flush mounted outlet boxes. Manual stations shall be mounted at 48 inches. Stations shall be single action type. Stations shall be finished in red, with raised letter operating instructions of contrasting color. Stations requiring the breaking of glass or plastic panels for operation are not acceptable. Stations employing glass rods are not acceptable. The use of a key or wrench shall be required to reset the station. Gravity or mercury switches are not acceptable. Switches and contacts shall be rated for the voltage and current upon which they operate. Addressable pull stations shall be capable of being field programmed, shall latch upon operation and remain latched until manually reset. Stations shall have a separate screw terminal for each conductor.

2.5 FIRE DETECTING DEVICES

Fire detecting devices shall comply with the applicable requirements of NFPA 72, NFPA 90A, UL 268, UL 268A, and UL 521. The detectors shall be provided as indicated. Detector base shall have screw terminals for making connections. No solder connections will be allowed. Detectors located in concealed locations (above ceiling, raised floors, etc.) shall have a remote visible indicator LED/LCD. Addressable fire detecting devices, except flame detectors, shall be dynamically supervised and uniquely identified in the control panel. All fire alarm initiating devices shall be individually addressable, except where indicated. Installed devices shall conform to NFPA 70 hazard classification of the area where devices are to be installed.

2.5.1 Heat Detectors

Heat detectors shall be designed for detection of fire by fixed temperature. Heat detector spacing shall be rated in accordance with UL 521. Detectors located in areas subject to moisture, exterior atmospheric conditions, or hazardous locations as defined by NFPA 70, shall be types approved for such locations. Heat detectors located in attic spaces or similar concealed spaces below the roof shall be intermediate temperature rated.

2.5.1.1 Omitted

2.5.1.2 Omitted

2.5.1.3 Fixed Temperature Detectors

Detectors shall be designed for semi-flush outlet box mounting and supported independently of wiring connections. Detectors shall be designed to detect high heat. The detectors shall have a specific temperature setting of 135 degrees F. The UL 521 test rating for the fixed temperature detectors shall be rated for 15 by 15 ft.

2.5.2 Smoke Detectors

Smoke detectors shall be designed for detection of abnormal smoke densities. Smoke detectors shall be photoelectric type. Detectors shall contain a visible indicator LED/LCD that shows when the unit is in alarm condition. Detectors shall not be adversely affected by vibration or pressure. Detectors shall be the plug-in type in which the detector base contains terminals for making wiring connections. Detectors that are to be installed in concealed (above false ceilings, etc.) locations shall be provided with a remote indicator LED/LCD suitable for mounting in a finished, visible location.

2.5.2.1 Omitted

2.5.2.2 Photoelectric Detectors

Detectors shall operate on a light scattering concept using an LED light source. Failure of the LED shall not cause an alarm condition. Detectors shall be factory set for sensitivity and shall require no field adjustments of any kind. Detectors shall have an obscuration rating in accordance with UL 268. Addressable smoke detectors shall be capable of having the sensitivity being remotely adjusted by the control panel.

2.5.2.3 Omitted

2.5.2.4 Duct Detectors

Duct-mounted photoelectric smoke detectors shall be furnished and installed where indicated and in accordance with NFPA 90A. Units shall consist of a smoke detector as specified in paragraph Photoelectric Detectors, mounted in a special housing fitted with duct sampling tubes. Detector circuitry shall be mounted in a metallic enclosure exterior to the duct. Detectors shall have a manual reset. Detectors shall be rated for air velocities that include air flows between 500 and 4000 fpm. Detectors shall be powered from the fire alarm panel. Sampling tubes shall run the full width of the duct. The duct detector package shall conform to the requirements of NFPA 90A, UL 268A, and shall be UL listed for use in air-handling

systems. The control functions, operation, reset, and bypass shall be controlled from the fire alarm control panel. Lights to indicate the operation and alarm condition; and the test and reset buttons shall be visible and accessible with the unit installed and the cover in place. Detectors mounted above 6 feet and those mounted below 6 feet that cannot be easily accessed while standing on the floor, shall be provided with a remote detector indicator panel containing test and reset switches. Remote lamps and switches as well as the affected fan units shall be properly identified in etched plastic placards. Detectors shall have auxiliary contacts to provide control, interlock, and shutdown functions specified in Section 15951A DIRECT DIGITAL CONTROL FOR HVAC. The detectors shall be supplied by the fire alarm system manufacturer to ensure complete system compatibility.

2.5.3 Omitted

2.5.4 Omitted

2.6 NOTIFICATION APPLIANCES

Audible appliances shall conform to the applicable requirements of UL 464. Devices shall be connected into notification appliance circuits. Devices shall have a separate screw terminal for each conductor. Audible appliances shall generate a unique audible sound from other devices provided in the building and surrounding area. Surface mounted audible appliances shall be painted white. Recessed audible appliances shall be installed with a grill that is painted white.

2.6.1 Omitted

2.6.2 Alarm Horns

Horns shall be surface mounted, with the matching mounting back box recessed single projector, vibrating type suitable for use in an electrically supervised circuit. Horns shall produce a sound rating of at least 85 dBA at 10 feet. Horns used in exterior locations shall be specifically listed or approved for outdoor use and be provided with metal housing and protective grilles.

2.6.3 Omitted

2.6.4 Visual Notification Appliances

Visual notification appliances shall conform to the applicable requirements of UL 1971 and the contract drawings. Appliances shall have clear high intensity optic lens, xenon flash tubes, and output white light. Strobe flash rate shall be between 1 to 3 flashes per second and a minimum of 75 candela. Strobe shall be semi-flush mounted.

2.6.5 Combination Audible/Visual Notification Appliances

Combination audible/visual notification appliances shall provide the same requirements as individual units except they shall mount as a unit in standard backboxes. Units shall be factory assembled. Any other audible notification appliance employed in the fire alarm systems shall be approved by the Contracting Officer.

2.6.6 Omitted

2.7 FIRE DETECTION AND ALARM SYSTEM PERIPHERAL EQUIPMENT

2.7.1 Electromagnetic Door Hold-Open Devices

Devices shall be attached to the walls unless otherwise indicated. Devices shall comply with the appropriate requirements of UL 228. Devices shall operate on 24 Volt dc power. Compatible magnetic component shall be attached to the door. Under normal conditions, the magnets shall attract and hold the doors open. When magnets are de-energized, they shall release the doors. Magnets shall have a holding force of 25 pounds. Devices shall be UL or FM approved. Housing for devices shall be brushed aluminum or stainless steel. Operation shall be fail safe with no moving parts. Electromagnetic door hold-open devices shall not be required to be held open during building power failure.

2.7.2 Conduit

Conduit and fittings shall comply with NFPA 70, UL 6, UL 1242, and UL 797.

2.7.3 Wiring

Wiring shall conform to NFPA 70. Wiring for 120 Vac power shall be No. 12 AWG minimum. The SLC wiring shall be copper cable in accordance with the manufacturers requirements. Wiring for fire alarm dc circuits shall be No. 14 AWG minimum. Voltages shall not be mixed in any junction box, housing, or device, except those containing power supplies and control relays. Wiring shall conform to NFPA 70. System field wiring shall be solid copper and installed in metallic conduit or electrical metallic tubing, except that rigid plastic conduit may be used under slab-on-grade. Conductors shall be color coded. Conductors used for the same functions shall be similarly color coded. Wiring code color shall remain uniform throughout the circuit. Pigtail or T-tap connections to initiating device circuits, supervisory alarm circuits, and notification appliance circuits are prohibited. T-tapping using screw terminal blocks is allowed for style 5 addressable systems.

2.7.4 Special Tools and Spare Parts

Software, connecting cables and proprietary equipment, necessary for the maintenance, testing, and reprogramming of the equipment shall be furnished to the Contracting Officer. Two spare fuses of each type and size required shall be furnished. Two percent of the total number of each different type of detector, but no less than two each, shall be furnished. Spare fuses shall be mounted in the fire alarm panel.

2.8 TRANSMITTERS

2.8.1 Radio Alarm Transmitters

Transmitters shall be by Monaco Enterprises or compatible with proprietary supervising station receiving equipment. Each radio alarm transmitter shall be the manufacturer's recognized commercial product, completely assembled, wired, factory tested, and delivered ready for installation and operation. Transmitters shall be provided in accordance with applicable portions of NFPA 72, NFPA 1221, and 47 CFR 15. Transmitter electronics module shall be contained within the physical housing as an integral, removable assembly. The proprietary supervising station receiving

equipment is by Monaco Enterprises and the transceiver shall be fully compatible with this equipment.

2.8.1.1 Transmitter Power Supply

Each radio alarm transmitter shall be powered by a combination of locally available 120-volt ac power and a sealed, lead-calcium battery.

a. Operation: Each transmitter shall operate from 120-volt ac power. In the event of 120-volt ac power loss, the transmitter shall automatically switch to battery operation. Switchover shall be accomplished with no interruption of protective service, and shall automatically transmit a trouble message. Upon restoration of ac power, transfer back to normal ac power supply shall also be automatic. Each transmitter shall meet the following requirements:

b. Battery Power: Transmitter standby battery capacity shall provide sufficient power to operate the transmitter in a normal standby status for a minimum of 72 hours and be capable of transmitting alarms during that period.

2.8.1.2 Radio Alarm Transmitter Housing

Transmitter housing shall be NEMA Type 1. The housing shall contain a lock that is keyed identical to the fire alarm system for the building. Radio alarm transmitter housing shall be factory painted with a suitable priming coat and not less than two coats of a hard, durable weatherproof enamel.

2.8.1.3 Antenna

The Contractor shall provide omnidirectional, coaxial, halfwave dipole antennas for radio alarm transmitters with a driving point impedance to match transmitter output. The antenna and antenna mounts shall be corrosion resistant and designed to withstand wind velocities of 100 mph. Antennas shall not be mounted to any portion of the building roofing system.

2.8.2 Omitted

2.8.3 Omitted

PART 3 EXECUTION

3.1 INSTALLATION

All work shall be installed as shown, and in accordance with NFPA 70 and NFPA 72, and in accordance with the manufacturer's diagrams and recommendations, unless otherwise specified. Smoke detectors shall not be installed until construction is essentially complete and the building has been thoroughly cleaned.

3.1.1 Power Supply for the System

A single dedicated circuit connection for supplying power from a branch circuit to each building fire alarm system shall be provided. The power shall be supplied as shown on the drawings. The power supply shall be equipped with a locking mechanism and marked in red with the words "FIRE ALARM CIRCUIT CONTROL".

3.1.2 Wiring

Conduit size for wiring shall be in accordance with NFPA 70. Wiring for the fire alarm system shall not be installed in conduits, junction boxes, or outlet boxes with conductors of lighting and power systems. Not more than two conductors shall be installed under any device screw terminal. The wires under the screw terminal shall be straight when placed under the terminal then clamped in place under the screw terminal. The wires shall be broken and not twisted around the terminal. Circuit conductors entering or leaving any mounting box, outlet box enclosure, or cabinet shall be connected to screw terminals with each terminal and conductor marked in accordance with the wiring diagram. Connections and splices shall be made using screw terminal blocks. The use of wire nut type connectors in the system is prohibited. Wiring within any control equipment shall be readily accessible without removing any component parts. The fire alarm equipment manufacturer's representative shall be present for the connection of wiring to the control panel.

3.1.3 Control Panel

The control panel and its assorted components shall be mounted so that no part of the enclosing cabinet is less than 12 inches nor more than 78 inches above the finished floor. Manually operable controls shall be between 36 and 42 inches above the finished floor. Panel shall be installed to comply with the requirements of UL 864.

3.1.4 Detectors

Detectors shall be located and installed in accordance with NFPA 72. Detectors shall be connected into signal line circuits or initiating device circuits as indicated on the drawings. Detectors shall be at least 12 inches from any part of any lighting fixture. Detectors shall be located at least 3 feet from diffusers of air handling systems. Each detector shall be provided with appropriate mounting hardware as required by its mounting location. Detectors which mount in open space shall be mounted directly to the end of the stubbed down rigid conduit drop. Conduit drops shall be firmly secured to minimize detector sway. Where length of conduit drop from ceiling or wall surface exceeds 3 feet, sway bracing shall be provided. Detectors installed in concealed locations (above ceiling, raised floors, etc.) shall have a remote visible indicator LED/LCD in a finished, visible location.

3.1.5 Notification Appliances

Notification appliances shall be mounted 80 inches above the finished floor or 6 inches below the ceiling, whichever is lower.

3.1.6 Annunciator Equipment

Annunciator equipment shall be mounted where indicated on the drawings.

3.1.7 Addressable Initiating Device Circuits Module

The initiating device circuits module shall be used to connect supervised conventional initiating devices (water flow switches, water pressure switches, manual fire alarm stations, high/low air pressure switches, and tamper switches). The module shall mount in an electrical box adjacent to or connected to the device it is monitoring and shall be capable of Style B supervised wiring to the initiating device. In order to maintain proper

supervision, there shall be no T-taps allowed on style B lines. Addressable initiating device circuits modules shall monitor only one initiating device each. Contacts in suppression systems and other fire protection subsystems shall be connected to the fire alarm system to perform supervisory and alarm functions as specified in Section 13930A WET PIPE SPRINKLER SYSTEM, FIRE PROTECTION, as indicated on the drawings and as specified herein.

3.1.8 Addressable Control Module

Addressable and control modules shall be installed in the outlet box or adjacent to the device they are controlling. If a supplementary suppression releasing panel is provided, then the monitor modules shall he mounted in a common enclosure adjacent to the suppression releasing panel and both this enclosure and the suppression releasing panel shall be in the same room as the releasing devices. All interconnecting wires shall be supervised unless an open circuit or short circuit abnormal condition does not affect the required operation of the fire alarm system. If control modules are used as interfaces to other systems, such as HVAC or elevator control, they shall be within the control panel or immediately adjacent to it. Control modules that control a group of notification appliances shall be adjacent to the first notification appliance in the notification appliance circuits. Control modules that connect to devices shall supervise the notification appliance circuits. Control modules that connect to auxiliary systems or interface with other systems (non-life safety systems) and where not required by NFPA 72, shall not require the secondary circuits to be supervised. Contacts in suppression systems and other fire protection subsystems shall be connected to the fire alarm system to perform required alarm functions as specified in Section 13930A WET PIPE SPRINKLER SYSTEM, FIRE PROTECTION, as indicated on the drawings and as specified herein.

3.2 OVERVOLTAGE AND SURGE PROTECTION

3.2.1 Power Line Surge Protection

All equipment connected to alternating current circuits shall be protected from surges per IEEE C62.41 B3 combination waveform and NFPA 70. Fuses shall not be used for surge protection. The surge protector shall be rated for a maximum let thru voltage of 350 Volts ac (line-to-neutral) and 350 Volt ac (neutral-to-ground).

3.2.2 Low Voltage DC Circuits Surge Protection

All SLC IDC, NAC, and communication cables/conductors, except fiber optics, shall have surge protection installed at each point where it exits or enters a building. Equipment shall be protected from surges per IEEE C62.41 B3 combination waveform and NFPA 70. The surge protector shall be rated to protect the 24 Volt dc equipment. The maximum dc clamping voltages shall be 36 V (line-to-ground) and 72 Volt dc (line-to-line).

3.2.3 Signal Line Circuit Surge Protection

All SLC, NAC and communication cables/conductors, shall have surge protection/isolation circuits installed at each point where it exits or enters a building. The circuit shall be protected from surges per IEEE C62.41 B3 combination waveform and NFPA 70. The surge protector/isolator shall be rated to protect the equipment.

3.3 GROUNDING

Grounding shall be provided by connecting to building ground system.

3.4 SUPERVISING STATION PROVISIONS

The proprietary type Supervising Station (PSS) is located in the Main Fire Station. The system is Monaco D-21M. All fire alarm equipment specified herein shall be compatible with the DT-21 system.

3.5 TESTING

The Contractor shall notify the Contracting Officer at least 10 days before the preliminary and acceptance tests are to be conducted. The tests shall be performed in accordance with the approved test procedures in the presence of the Contracting Officer. The control panel manufacturer's representative shall be present to supervise tests. The Contractor shall furnish instruments and personnel required for the tests.

3.5.1 Preliminary Tests

Upon completion of the installation, the system shall be subjected to functional and operational performance tests including tests of each installed initiating and notification appliance, when required. Tests shall include the meggering of system conductors to determine that the system is free from grounded, shorted, or open circuits. The megger test shall be conducted prior to the installation of fire alarm equipment. If deficiencies are found, corrections shall be made and the system shall be retested to assure that it is functional. After completing the preliminary testing the Contractor shall complete and submit the NFPA 72, Certificate of Completion.

3.5.2 Acceptance Test

Acceptance testing shall not be performed until the Contractor has completed and submitted the Certificate of Completion. Testing shall be in accordance with NFPA 72. The recommended tests in NFPA 72 shall be considered mandatory and shall verify that previous deficiencies have been corrected. The Contractor shall complete and submit the NFPA 72, Inspection and Testing Form. The installer shall provide the completed NFPA 72 form and as-builts no later than one week before the final acceptance testing. The installer shall start the battery test 48 hours prior beginning the final acceptance testing. The first test to be done at the final acceptance test will be full system alarm on battery power for time period required in NFPA 72. If system passes the battery test, then the remaining portion of the testing shall continue on A/C power, otherwise testing shall be rescheduled per the preceding procedure after battery deficiencies are corrected. The test shall include all requirements of NFPA 72 and the following:

a. Test of each function of the control panel.

b. Test of each circuit in both trouble and normal modes.

c. Tests of each alarm initiating devices in both normal and trouble conditions.

d. Tests of each control circuit and device.

e. Tests of each alarm notification appliance.

f. Tests of the battery charger and batteries.

g. Complete operational tests under emergency power supply.

h. Visual inspection of wiring connections.

i. Opening the circuit at each alarm initiating device and notification appliance to test the wiring supervisory feature.

j. Ground fault

k. Short circuit faults

l. Stray voltage

m. Loop resistance

3.6 TRAINING

Training course shall be provided for the operations and maintenance staff. The course shall be conducted in the building where the system is installed or as designated by the Contracting Officer. The training period for systems operation shall consist of 1 training days (8 hours per day) and shall start after the system is functionally completed but prior to final acceptance tests. The training period for systems maintenance shall consist of 2 training days (8 hours per day) and shall start after the system is functionally completed but prior to final acceptance tests. The instructions shall cover items contained in the operating and maintenance instructions. In addition, training shall be provided on performance of expansions or modifications to the fire detection and alarm system. The training period for system expansions and modifications shall consist of at least 1 training days (8 hours per day) and shall start after the system is functionally completed but prior to final acceptance tests.

-- End of Section --

SECTION TABLE OF CONTENTS

DIVISION 13 - SPECIAL CONSTRUCTION

SECTION 13853A

CENTRAL FIRE ALARM SYSTEM, DIGITAL ALARM COMMUNICATOR TYPE

11/97

PART 1 GENERAL

1.1 REFERENCES
1.2 GENERAL REQUIREMENTS
1.2.1 Standard Products
1.2.2 Nameplates
1.2.3 Keys and Locks
1.2.4 Tags
1.2.5 Verification of Dimensions
1.2.6 Compliance
1.3 SYSTEM DESIGN
1.3.1 Operation
1.3.2 Alarm Functions
1.3.3 Supervisory Functions
1.3.4 Primary Power
1.3.5 Battery Backup Power
1.4 SUBMITTALS
1.5 DELIVERY AND STORAGE

PART 2 PRODUCTS

2.1 FIRE ALARM MONITORING CENTER
2.1.1 Digital Alarm Communicator Receiver (DACR)
2.1.2 Audible Alarm
2.1.3 Receiver Code Format
2.1.4 Visual Display
2.1.5 Receiver Memory
2.1.6 Receiver Supervision
2.1.7 Manual Battery Test
2.1.8 Omitted
2.1.9 Power Supply
2.1.10 External Connections
2.1.11 Self-Contained Printer
2.2 MONITORING CENTER TERMINAL
2.3 MONITORING CENTER PRINTER
2.4 MONITORING CENTER POWER SUPPLIES
2.5 OMITTED
2.5.1 Omitted
2.5.1.1 Omitted
2.5.1.2 Omitted
2.5.2 Omitted
2.5.3 Omitted
2.6 OMITTED
2.6.1 Omitted
2.6.2 Omitted
2.6.3 Omitted
2.7 PERIPHERAL EQUIPMENT
2.7.1 Conduit

2.7.2 Ground Rods
2.7.3 Wiring
2.7.4 Special Tools and Spare Parts
2.7.5 Omitted

PART 3 EXECUTION

3.1 INSTALLATION
3.1.1 Power Supply for the System
3.1.2 Wiring
3.2 OVERVOLTAGE AND SURGE PROTECTION
3.3 GROUNDING
3.4 TESTING
3.4.1 Performance Testing
3.4.2 Acceptance Test
3.5 TRAINING

-- End of Section Table of Contents --

UFGS-13853A (November 1997)

SECTION 13853A

CENTRAL FIRE ALARM SYSTEM, DIGITAL ALARM COMMUNICATOR TYPE
11/97

PART 1 GENERAL

1.1 REFERENCES

The publications listed below form a part of this specification to the extent referenced. The publications are referred to in the text by basic designation only.

INSTITUTE OF ELECTRICAL AND ELECTRONICS ENGINEERS (IEEE)

IEEE C62.41	(1991; R 1995) Surge Voltages in Low-Voltage AC Power Circuits

NATIONAL FIRE PROTECTION ASSOCIATION (NFPA)

NFPA 70	(1999) National Electrical Code
NFPA 72	(1996; Errata Oct 96, Dec 96; TIA 96-1, 96-2, 96-3) National Fire Alarm Code

UNDERWRITERS LABORATORIES (UL)

UL 6	(1997) Rigid Metal Conduit
UL 467	(1993; Rev thru Apr 1999) Grounding and Bonding Equipment
UL 797	(1993; Rev thru Mar 1997) Electrical Metallic Tubing
UL 1242	(1996; Rev Mar 98) Intermediate Metal Conduit

1.2 GENERAL REQUIREMENTS

1.2.1 Standard Products

Material and equipment shall be the standard products of Monaco Enterprises; regularly engaged in the manufacture of digital alarm communicator systems and shall be items that have been in satisfactory use for at least 2 years prior to bid opening. Equipment shall be supported by a service organization that can provide service within 24 hours.

1.2.2 Nameplates

Major components of equipment shall have the manufacturer's name, address, type or style, voltage and current rating, and catalog number on a noncorrosive and nonheat-sensitive plate which is securely attached to the equipment.

1.2.3 Keys and Locks

Locks shall be keyed alike.

1.2.4 Tags

Tags with stamped identification number shall be furnished for keys and locks.

1.2.5 Verification of Dimensions

The Contractor shall verify all dimensions in the field and shall advise the Contracting Officer of any discrepancy before performing the work.

1.2.6 Compliance

The central fire alarm system shall be configured in accordance with NFPA 72. The transmitting equipment shall be compatible with receiving equipment and shall be UL listed or FM approved or shall be approved or listed by a nationally recognized testing laboratory, in accordance with the applicable NFPA standards.

1.3 SYSTEM DESIGN

1.3.1 Operation

The central fire alarm system shall be a complete, supervised system consisting of remote digital transmitters connected to building fire alarm panels and a digital receiver system at a central monitoring location. The system shall be activated into the alarm mode when an abnormal condition occurs in any building fire alarm system. The system shall remain in the alarm mode until the alarm is acknowledged and reset by the operator.

1.3.2 Alarm Functions

An alarm, trouble or supervisory condition in any building which reports to the fire alarm monitoring center shall automatically initiate the following functions:

a. Transmission of a signal by the digital alarm communicator transmitter (DACT). The DACT shall transmit the signal over a programmed frequency to the digital alarm communicator receiver (DACR) at the fire alarm monitoring center.

b. Upon receipt of the signal at the fire alarm monitoring center the signal shall be decoded and status information shall be displayed on the monitoring center visual display indicating the nature of the status change.

c. An audible signal shall sound at the monitoring center until the alarm is acknowledged.

d. The alarm information shall be printed on the system printer at the monitoring center.

1.3.3 Supervisory Functions

Each DACT shall transmit a test signal a minimum of once every 24 hours. A trouble signal indicating that the test signal from any DACT is delinquent

shall be annunciated at the monitoring center for any DACT test signal which is not received within 24 hours of its previous signal.

1.3.4 Primary Power

Operating power shall be provided as required by paragraph Power Supply for the System. Where emergency power is available at transmitter locations, transfer from normal to emergency power or restoration from emergency to normal power shall be fully automatic and shall not cause transmission of a false alarm. Loss of ac power at transmitter locations shall not prevent transmission of a signal to the monitoring center upon alarm from any building fire alarm system. Loss of ac power at the monitoring center shall not prevent reception and annunciation of received signals.

1.3.5 Battery Backup Power

Battery backup power for transmitting equipment and receiving equipment shall be through use of rechargeable, sealed-type storage batteries and battery charger.

1.4 SUBMITTALS

Government approval is required for submittals with a "G" designation; submittals not having a "G" designation are for information only. When used, a designation following the "G" designation identifies the office that will review the submittal for the Government. The following shall be submitted in accordance with Section 01330 SUBMITTAL PROCEDURES:

SD-02 Shop Drawings

Central Fire Alarm System; G|RE.

Detail drawings, signed by the registered professional engineer, consisting of a complete list of transmitting and receiving equipment, auxiliary equipment and material, including manufacturer's descriptive and technical literature, catalog cuts, description of the procedure for switching from the primary DACR to the backup DACR, and installation instructions. The detail drawings shall also contain transmitting equipment panel layout, monitoring center equipment layout, and any other details required to demonstrate that the system has been coordinated and will properly function as a unit.

Wiring Diagrams; G|RE.

Detailed point-to-point wiring diagram, signed by the registered professional engineer, showing all points of connection. Diagram shall include connections between monitoring center devices, transmitter location appliances, control panels, supervised devices, interfaces between building fire alarm equipment and transmitting equipment, and all equipment that is activated or controlled by the monitoring center equipment.

SD-03 Product Data

Battery; G|RE.

Substantiating battery calculations for supervisory and alarm power requirements. Ampere-hour requirements for each monitoring

center system component and each transmitter panel component; and the battery recharging periods shall be included. Battery calculations shall substantiate both NFPA 72 and specification requirements.

Spare Parts; G|RE.

Spare parts data for each different item of material and equipment specified, not later than 2 months prior to the date of beneficial use. Data shall include a complete list of parts and supplies with the current unit prices and source of supply and a list of the parts recommended by the manufacturer to be replaced after 1 year of service.

Qualifications; G|RE.

Qualifications, with verification of experience and license number, of a registered professional engineer with at least 4 years of current experience in the design of the fire protection and detection systems.

Central Fire Alarm System; G|RE.

Six copies of operating instructions outlining step-by-step procedures required for system startup, operation, and shutdown. The instructions shall include the manufacturer's name, model number, service manual, parts list, and brief description of the equipment and basic operating features. Six copies of maintenance instructions listing routine maintenance procedures, possible breakdowns and repairs and troubleshooting guide. The instructions shall include conduit layout, equipment layout, simplified wiring control diagrams of the system as installed, and programming of DACT and DACR equipment. Instructions shall be approved prior to training.

Training; G|RE.

Lesson plans and training data, in manual format, for the training course. The operations training shall familiarize designated Government personnel with proper operation of the system. The maintenance training course shall provide the designated Government personnel adequate knowledge required to diagnose, repair, maintain, and expand functions inherent to the system.

Test Procedures.

Detailed test procedures, signed by the registered professional engineer for the central fire alarm system 60 days prior to performing system tests.

SD-06 Test Reports

Testing.

Test reports in booklet form showing field tests performed to prove compliance with the specified performance criteria, upon completion and testing of the installed system. Each test report shall document readings and test results, and indicate the final

position of controls.

SD-07 Certificates

Equipment.

Certified copies of current approvals or listings issued by UL, FM or other nationally recognized testing laboratory, showing compliance with specified NFPA standards.

Installer; G|RE.

Documentation demonstrating that the central fire alarm system installer has been regularly engaged in the installation of fire detection and alarm systems meeting NFPA standards for a minimum of 3 years immediately preceding commencement of this contract. Documentation shall include proof of satisfactory performance on at least three projects similar to that required by these specifications, including the names and telephone numbers of using agency points of contact for each of these projects. Documentation shall indicate the type of each system installed and include a written certificate that each system has performed satisfactorily in the manner specified for a period of not less than 12 months following completion. Data shall be submitted 30 days prior to commencement of installation. Listing of the installer under "Protective Signaling Services - Local, Auxiliary, Remote Station Proprietary (UUJS)" or under "Protective Signaling Services - Central Station (UUFX)" of the UL Fire Protection Equipment Directory will be accepted as equivalent proof of compliance with the foregoing experience requirements.

1.5 DELIVERY AND STORAGE

Equipment delivered and placed in storage shall be protected from the weather, humidity and temperature variation, dirt and dust, and any other contaminants.

PART 2 PRODUCTS

2.1 FIRE ALARM MONITORING CENTER

2.1.1 Digital Alarm Communicator Receiver (DACR)

Transmission of signals from remote transceivers shall be via radio frequency. The receiver shall be Monaco Enterprises. The system shall be completely assembled, wired and tested at the factory, and delivered ready for installation. The DACR shall be solid state design with receiver, signal to message decoder, audio alarm signaling devices, audio alarm silence switch, visual display, alarm reset switch, alarm recording printer, primary and emergency power supplies, power supply monitors, memory devices and necessary interconnecting cables. The DACRs shall be configured as one active unit and one backup unit. Provide programming, connections and switching such that the backup unit may be switched into service within 30 seconds of detection of failure of the active unit.

2.1.2 Audible Alarm

The audible alarm signaling devices used to indicate the receipt of fire alarm messages shall produce a unique sound. The device shall be

internally mounted in the DACR and shall be activated upon receipt of all fire alarm signals. The audible device shall also be used to indicate the receipt of DACT trouble messages, including fire alarm system trouble and supervisor signals. The audible device shall continue to sound until acknowledged with the silence switch by the operator.

2.1.3 Receiver Code Format

The DACR shall be capable of receiving and decoding any of the following code formats:

Code Format	Speed (pulses per second)
3 X 1	20
4 X 1	20
4 X 2	20
3 X 1	10
3 X 1	40

2.1.4 Visual Display

Visual display shall be alphanumeric cathode ray tube (CRT) type. Display shall indicate as a minimum the originating transmitter identity code number and shall include the following message designations:

a. Fire

b. Trouble

c. Battery

d. Test

e. Tamper

f. Omitted

2.1.5 Receiver Memory

Receiver shall have a history buffer capable of retaining a minimum of 64 Digital Alarm Communicator Transmitter (DACT) codes, together with the specific message designations associated with each DACT. The system shall annunciate any received message not matching the programmed DACT codes where such message identification code is not stored in the system. Upon command, the console shall display and print a summary of DACT which have transmitted a low-battery or trouble message, or failed to transmit a message during the previous 24 hour test period. Any incoming DACT signal shall pre-empt the command display and printout function, and shall be processed, displayed, and printed. The memory shall not be purged and shall always be current and available. Transmitter data memory shall not be lost in the event of a total loss of operating or emergency power supplies.

2.1.6 Receiver Supervision

The supervisory system shall provide constant supervision of the operating conditions of the DACR. Indicators shall be provided for each major component, and an audible signal shall be produced in the event of failure of any major component. A switch shall be provided to silence the audible

trouble signal.

2.1.7 Manual Battery Test

A self-contained or externally-mounted switch shall manually place the receiver on emergency battery power for test purposes.

2.1.8 Omitted

2.1.9 Power Supply

The operating power for the DACR shall be single phase taken from the building electric service as specified in paragraph Power Supply for the System. Emergency backup power shall be provided by sealed lead-calcium type batteries requiring no additional water. The charging system shall recharge fully discharged batteries within 12 hours and maintain the batteries in the fully charged state. The battery shall have the capacity to operate the system for not less than 48 hours under maximum normal load with the power supply to the charger disconnected.

2.1.10 External Connections

The DACR shall be provided with connections for an external printer and CRT terminal or personal computer (PC).

2.1.11 Self-Contained Printer

The DACR shall include a self-contained printer. Printer shall output a minimum of 32 characters per line and shall record all displayed transaction information including time and date.

2.2 MONITORING CENTER TERMINAL

The monitoring center terminal shall be PC based and shall be provided with an applications program to allow it to be connected to the DACR. The terminal shall display additional information about the building from which an alarm is received, detailed description of the current alarm, and alarm histories. The terminal shall provide operator interface with the Central Fire Alarm System. The terminal shall include a central processing unit with minimum 32 bit processor, 2 megabytes of Random Access memory, 14 inch color monitor, 101 key keyboard, 3-1/2 inch floppy disk drive and hard disk drive with sufficient capacity to store 6 months of transaction information.

2.3 MONITORING CENTER PRINTER

The monitoring center printer shall be compatible with the monitoring center terminal and shall be used to record all transaction information and history reports. Printer shall be dot matrix type with minimum 9 pin printhead, shall use 8-1/2 inch wide pin feed paper and shall print a minimum of 80 characters per line. Print speed shall be minimum 120 characters per second.

2.4 MONITORING CENTER POWER SUPPLIES

Each component of monitoring center equipment shall be provided with a self-contained power supply. An uninterruptible power supply (UPS) shall be provided for equipment which does not have a self-contained battery backup, such as the terminal and printer.

2.5 OMITTED

2.5.1 Omitted

2.5.1.1 Omitted

2.5.1.2 Omitted

2.5.2 Omitted

2.5.3 Omitted

2.6 OMITTED

2.6.1 Omitted

2.6.2 Omitted

2.6.3 Omitted

2.7 PERIPHERAL EQUIPMENT

2.7.1 Conduit

Conduit and fittings shall comply with UL 6, UL 1242, and UL 797.

2.7.2 Ground Rods

Ground rods shall be of copper-clad steel conforming to UL 467 solid stainless steel not less than 5/8 inch in diameter by 8 feet in length.

2.7.3 Wiring

Wiring for 120 Vac power shall be No. 12 AWG minimum. Wiring for low voltage dc circuits shall be No. 14 AWG minimum. Power wiring (over 28 volts) and control wiring shall be isolated. All wiring shall conform to NFPA 70. System field wiring shall be solid copper and installed in metallic conduit or electrical metallic tubing. Conductors shall be color coded. Conductors used for the same functions shall be similarly color coded. Wiring code color shall remain uniform throughout the circuit.

2.7.4 Special Tools and Spare Parts

Special tools necessary for the maintenance of the equipment shall be furnished. One spare set of fuses of each type and size required and five spare lamps of each type shall be furnished for each transmitter location and for the receiver location. Spare fuses and lamps shall be mounted in the equipment cabinets at each location.

2.7.5 Omitted

PART 3 EXECUTION

3.1 INSTALLATION

Work shall be installed as shown and in accordance with the manufacturer's recommendations. Necessary interconnections, services, and adjustments required for a complete and operational system shall be provided.

Electrical work shall be in accordance with NFPA 70 and Section 16415A ELECTRICAL WORK, INTERIOR.

3.1.1 Power Supply for the System

A single dedicated 120 volt, single phase branch-circuit connection for supplying power to the monitoring center equipment shall be provided as shown on the Contract Drawings. The backup power supply shall be automatically energized upon failure of the normal power supply. The primary power shall be supplied from a panelboard circuit breaker or disconnect switch which shall be red in color and locked in the energized position. Panel shall be marked "FIRE ALARM CIRCUIT CONTROL" with a rigid plastic nameplate. Transmitter 120 Vac power shall be extended from each building's fire alarm panel.

3.1.2 Wiring

Wiring for systems shall be installed in rigid conduit, intermediate metallic conduit, or electric metallic tubing. The conductors for central station alarm system shall not be installed in conduits, junction boxes, or outlet boxes with conductors of lighting and power systems. Conduit shall be 1/2 inch minimum in accordance with NFPA 70. No more than one conductor shall be installed under any screw terminal. Circuit conductors entering or leaving any mounting box, outlet box enclosure or cabinet shall be connected to screw terminals with each terminal marked in accordance with the wiring diagram. Connections and splices shall be made using screw terminal blocks. Wire nut type connectors shall not be used in the system. Wiring within control equipment shall be readily accessible without removing component parts.

3.2 OVERVOLTAGE AND SURGE PROTECTION

Equipment connected to alternating current circuits shall be protected from surges per IEEE C62.41 and NFPA 70. Cables and conductors which serve as communications links, except fiber optics, shall have surge protection circuits installed at each end. Fuses shall not be used for surge protection.

3.3 GROUNDING

Grounding shall be provided to building ground. Maximum impedance to ground shall be 25 ohms. If the maximum impedance to ground exceeds 25 ohms, ground rods shall be driven. Ground rods shall not protrude more than 6 inches below grade and shall be bonded to building ground.

3.4 TESTING

The Contractor shall notify the Contracting Officer 30 days before the performance and acceptance tests are to be conducted. The tests shall be performed in the presence of the Contracting Officer under the supervision of the central fire alarm system manufacturer's qualified representative. The Contractor shall furnish all instruments and personnel required for the tests.

3.4.1 Performance Testing

Upon completion of the installation, the system shall be subjected to a complete functional and operational performance test by the Contractor. Test shall determine that the system is free from grounded, shorted, or

open circuits. When all corrections have been made, the system shall be retested to assure that it is functional. Copies of performance test reports shall be submitted in accordance with paragraph SUBMITTALS.

3.4.2 Acceptance Test

Testing shall be in accordance with NFPA 72. The recommended tests in NFPA 72 shall be considered mandatory and shall verify that all previous deficiencies have been corrected. The tests shall include the following:

a. Tests to indicate there are no grounded, shorted, or open circuits.

b. Tests of each input to each digital alarm communicator transmitter, including transmission of trouble and alarm signals across both the first and second telephone lines at each location and proper reception at the monitoring center.

c. Tests of DACR, terminal and printer for all required functions.

d. Tests of normal and emergency power supplies, including batteries. Tests shall include verification of complete system operation at extreme end of the required emergency power duration, and verification of recharging time.

3.5 TRAINING

Training course shall be provided for the operations and maintenance staff. The course shall be conducted in the building where the monitoring center is installed or as designated by the Contracting Officer. The training period shall consist of 3 training days (8 hours per day) and shall start after the system is functionally completed but prior to final acceptance tests. Training shall be provided for two personnel. The instructions shall cover all of the items contained in the operating and maintenance instructions.

-- End of Section --

SECTION TABLE OF CONTENTS

DIVISION 13 - SPECIAL CONSTRUCTION

SECTION 13930A

WET PIPE SPRINKLER SYSTEM, FIRE PROTECTION

01/04

PART 1 GENERAL

1.1 REFERENCES
1.2 GENERAL REQUIREMENTS
1.2.1 Hydraulic Design
1.2.1.1 Hose Demand
1.2.1.2 Basis for Calculations
1.2.2 Sprinkler Coverage
1.3 COORDINATION OF TRADES
1.4 DELIVERY AND STORAGE
1.5 FIELD MEASUREMENTS
1.6 SUBMITTALS
1.7 HYDRAULIC CALCULATIONS
1.8 FIRE PROTECTION SPECIALIST
1.9 SPRINKLER SYSTEM INSTALLER
1.10 REGULATORY REQUIREMENTS
1.11 SPARE PARTS
1.12 SHOP DRAWINGS

PART 2 PRODUCTS

2.1 STANDARD PRODUCTS
2.2 NAMEPLATES
2.3 REQUIREMENTS FOR FIRE PROTECTION SERVICE
2.4 UNDERGROUND PIPING COMPONENTS
2.4.1 Pipe
2.4.2 Fittings and Gaskets
2.4.3 Gate Valve and Indicator Posts
2.5 ABOVEGROUND PIPING COMPONENTS
2.5.1 Steel Piping Components
2.5.1.1 Steel Pipe
2.5.1.2 Fittings for Non-Grooved Steel Pipe
2.5.1.3 Grooved Mechanical Joints and Fittings
2.5.1.4 Flanges
2.5.1.5 Bolts, Nut, and Washers
2.5.2 Copper Tube Components
2.5.2.1 Copper Tube
2.5.2.2 Copper Fittings and Joints
2.5.3 Pipe Hangers
2.5.4 Valves
2.5.4.1 Control Valve and Gate Valve
2.5.4.2 Check Valve
2.6 ALARM CHECK VALVE ASSEMBLY
2.7 WATERFLOW ALARM
2.8 ALARM INITIATING AND SUPERVISORY DEVICES
2.8.1 Sprinkler Waterflow Indicator Switch, Vane Type

2.8.2 Valve Supervisory (Tamper) Switch
2.9 FIRE DEPARTMENT CONNECTION
2.10 SPRINKLERS
2.10.1 Pendent Sprinkler
2.10.2 Upright Sprinkler
2.10.3 Sidewall Sprinkler
2.11 DISINFECTING MATERIALS
2.11.1 Liquid Chlorine
2.11.2 Hypochlorites
2.12 ACCESSORIES
2.12.1 Sprinkler Cabinet
2.12.2 Pendent Sprinkler Escutcheon
2.12.3 Pipe Escutcheon
2.12.4 Identification Sign
2.13 DOUBLE-CHECK VALVE BACKFLOW PREVENTION ASSEMBLY
2.14 WALL HYDRANT

PART 3 EXECUTION

3.1 FIRE PROTECTION RELATED SUBMITTALS
3.2 INSTALLATION REQUIREMENTS
3.3 INSPECTION BY FIRE PROTECTION SPECIALIST
3.4 ABOVEGROUND PIPING INSTALLATION
3.4.1 Protection of Piping Against Earthquake Damage
3.4.2 Piping in Exposed Areas
3.4.3 Piping in Finished Areas
3.4.4 Pendent Sprinklers
3.4.4.1 Pendent Sprinkler Locations
3.4.5 Upright Sprinklers
3.4.6 Pipe Joints
3.4.7 Reducers
3.4.8 Pipe Penetrations
3.4.9 Escutcheons
3.4.10 Inspector's Test Connection
3.4.11 Drains
3.4.12 Installation of Fire Department Connection
3.4.13 Identification Signs
3.5 UNDERGROUND PIPING INSTALLATION
3.6 EARTHWORK
3.7 ELECTRICAL WORK
3.8 DISINFECTION
3.9 PIPE COLOR CODE MARKING
3.10 PRELIMINARY TESTS
3.10.1 Underground Piping
3.10.1.1 Flushing
3.10.1.2 Hydrostatic Testing
3.10.2 Aboveground Piping
3.10.2.1 Hydrostatic Testing
3.10.2.2 Backflow Prevention Assembly Forward Flow Test
3.10.3 Testing of Alarm Devices
3.10.4 Main Drain Flow Test
3.11 FINAL ACCEPTANCE TEST
3.12 ON-SITE TRAINING

-- End of Section Table of Contents --

SECTION 13930A

WET PIPE SPRINKLER SYSTEM, FIRE PROTECTION
01/04

PART 1 GENERAL

1.1 REFERENCES

The publications listed below form a part of this specification to the extent referenced. The publications are referred to within the text by the basic designation only.

ASTM INTERNATIONAL (ASTM)

ASTM A 135	(2001) Electric-Resistance-Welded Steel Pipe
ASTM A 183	(2003) Carbon Steel Track Bolts and Nuts
ASTM A 47/A 47M	(1999) Ferritic Malleable Iron Castings
ASTM A 53/A 53M	(2002) Pipe, Steel, Black and Hot-Dipped, Zinc-Coated, Welded and Seamless
ASTM A 536	(1984; R 1999el) Ductile Iron Castings
ASTM A 795	(2000) Black and Hot-Dipped Zinc-Coated (Galvanized) Welded and Seamless Steel Pipe for Fire Protection Use
ASTM B 62	(2002) Composition Bronze or Ounce Metal Castings
ASTM B 75	(2002) Seamless Copper Tube
ASTM B 88	(2002) Seamless Copper Water Tube
ASTM D 2000	(2001) Rubber Products in Automotive Applications
ASTM F 436	(2003) Hardened Steel Washers

AMERICAN SOCIETY OF SANITARY ENGINEERING (ASSE)

ASSE 1015	(1999) Double Check Backflow Prevention Assemblies and Double Check Fire Protection Backflow Prevention Assemblies

AMERICAN WATER WORKS ASSOCIATION(AWWA)

AWWA B300	(1999) Hypochlorites
AWWA B301	(1999) Liquid Chlorine
AWWA C104	(1995) Cement-Mortar Lining for

	Ductile-Iron Pipe and Fittings for Water
AWWA C110	(1998) Ductile-Iron and Gray-Iron Fittings, 3 In. Through 48 In. (76 mm through 1219 mm), for Water
AWWA C111	(2000) Rubber-Gasket Joints for Ductile-Iron Pressure Pipe and Fittings
AWWA C151	(2002) Ductile-Iron Pipe, Centrifugally Cast, for Water
AWWA C203	(2002; A C203a-99) Coal-Tar Protective Coatings and Linings for Steel Water Pipelines - Enamel and Tape - Hot-Applied
AWWA C606	(1997) Grooved and Shouldered Joints
AWWA C651	(1999) Disinfecting Water Mains
AWWA C652	(2002) Disinfection of Water Storage Facilities
AWWA EWW	(1998) Standard Methods for the Examination of Water and Wastewater

ASME INTERNATIONAL (ASME)

ASME B16.1	(1998) Cast Iron Pipe Flanges and Flanged Fittings
ASME B16.11	(2002) Forged Fittings, Socket-Welding and Threaded
ASME B16.18	(2002) Cast Copper Alloy Solder Joint Pressure Fittings
ASME B16.21	(1992) Nonmetallic Flat Gaskets for Pipe Flanges
ASME B16.22	(2002) Wrought Copper and Copper Alloy Solder Joint Pressure Fittings
ASME B16.26	(1988) Cast Copper Alloy Fittings for Flared Copper Tubes
ASME B16.3	(1998) Malleable Iron Threaded Fittings
ASME B16.4	(1998) Gray Iron Threaded Fittings
ASME B16.9	(2001) Factory-Made Wrought Steel Buttwelding Fittings
ASME B18.2.1	(1996) Square and Hex Bolts and Screws, Inch Series
ASME B18.2.2	(1987; R 1999) Square and Hex Nuts

FM GLOBAL (FM)

FM P7825a	(2003) Approval Guide Fire Protection
FM P7825b	(2003) Approval Guide Electrical Equipment

MANUFACTURERS STANDARDIZATION SOCIETY OF THE VALVE AND FITTINGS INDUSTRY (MSS)

MSS SP-71	(1997) Gray Iron Swing Check Valves, Flanged and Threaded Ends

NATIONAL FIRE PROTECTION ASSOCIATION (NFPA)

NFPA 101	(2003) Life Safety Code
NFPA 13	(2002) Installation of Sprinkler Systems
NFPA 13D	(2002) Installation of Sprinkler Systems in One- and Two-Family Dwellings and Manufactured Homes
NFPA 13R	(2002) Installation of Sprinkler Systems in Residential Occupancies Up to and Including Four Stories in Height
NFPA 1963	(2003) Fire Hose Connections
NFPA 24	(2002) Installation of Private Fire Service Mains and Their Appurtenances

NATIONAL INSTITUTE FOR CERTIFICATION IN ENGINEERING TECHNOLOGIES (NICET)

NICET 1014-7	(1995) Program Detail Manual for Certification in the Field of Fire Protection Engineering Technology (Field Code 003) Subfield of Automatic Sprinkler System Layout

UNDERWRITERS LABORATORIES (UL)

UL Bld Mat Dir	(2003) Building Materials Directory
UL Fire Prot Dir	(2003) Fire Protection Equipment Directory

1.2 GENERAL REQUIREMENTS

Wet pipe sprinkler system shall be provided in areas indicated on the drawings. The sprinkler system shall provide fire sprinkler protection for the entire area. Except as modified herein, the system shall be designed and installed in accordance with NFPA 13. Rack sprinklers shall be in accordance with NFPA 13. Pipe sizes which are not indicated on drawings shall be determined by hydraulic calculation. The Contractor shall design any portions of the sprinkler system that are not indicated on the drawings including locating sprinklers, piping and equipment, and size piping and equipment when this information is not indicated on the drawings or is not specified herein. The design of the sprinkler system shall be based on hydraulic calculations, and the other provisions specified herein.

1.2.1 Hydraulic Design

The system shall be hydraulically designed to discharge a minimum density of .15 gpm per square foot over the hydraulically most demanding 3,000 square feet of floor area. The minimum pipe size for branch lines in gridded systems shall be 1-1/4 inch. Hydraulic calculations shall be in accordance with the Area/Density Method of NFPA 13. Water velocity in the piping shall not exceed 20 ft/s.

1.2.1.1 Hose Demand

An allowance for exterior hose streams of 500 gpm shall be added to the sprinkler system demand at the point of connection to the existing system.

1.2.1.2 Basis for Calculations

The design of the system shall be based upon the water supply information shown on the drawings. Water supply shall be presumed available at the point of connection to existing. Hydraulic calculations shall be based upon the Hazen-Williams formula with a "C" value of 120 for steel piping, 150 for copper tubing, 140 for new cement-lined ductile-iron piping, and 100 for existing underground piping.

1.2.2 Sprinkler Coverage

Sprinklers shall be uniformly spaced on branch lines. In buildings protected by automatic sprinklers, sprinklers shall provide coverage throughout 100 percent of the building. This includes, but is not limited to, telephone rooms, electrical equipment rooms, boiler rooms, switchgear rooms, transformer rooms, and other electrical and mechanical spaces. Coverage per sprinkler shall be in accordance with NFPA 13, but shall not exceed 100 square feet for extra hazard occupancies, 130 square feet for ordinary hazard occupancies, and 225 square feet for light hazard occupancies. Exceptions are as follows:

1) Facilities that are designed in accordance with NFPA 13R and NFPA 13D.

2) Sprinklers may be omitted from small rooms which are exempted for specific occupancies in accordance with NFPA 101.

1.3 COORDINATION OF TRADES

Piping offsets, fittings, and any other accessories required shall be furnished as required to provide a complete installation and to eliminate interference with other construction. Sprinkler shall be installed over and under ducts, piping and platforms when such equipment can negatively effect or disrupt the sprinkler discharge pattern and coverage.

1.4 DELIVERY AND STORAGE

All equipment delivered and placed in storage shall be housed in a manner to preclude any damage from the weather, humidity and temperature variations, dirt and dust, or other contaminants. Additionally, all pipes shall either be capped or plugged until installed.

1.5 FIELD MEASUREMENTS

The Contractor shall become familiar with all details of the work, verify

all dimensions in the field, and shall advise the Contracting Officer of any discrepancy before performing the work.

1.6 SUBMITTALS

Government approval is required for submittals with a "G" designation; submittals not having a "G" designation are for information only or as otherwise designated. When used, a designation following the "G" designation identifies the office that will review the submittal for the Government. The following shall be submitted in accordance with Section 01330 SUBMITTAL PROCEDURES:

SD-02 Shop Drawings

Shop Drawings; G, AE

Three copies of the Sprinkler System Shop Drawings, no later than 21 days prior to the start of sprinkler system installation.

As-Built Drawings

As-built shop drawings, at least 14 days after completion of the Final Tests. The Sprinkler System Drawings shall be updated to reflect as-built conditions after all related work is completed and shall be on reproducible full-size mylar film.

SD-03 Product Data

Fire Protection Related Submittals

A list of the Fire Protection Related Submittals, no later than 7 days after the approval of the Fire Protection Specialist.

Sway Bracing; G, AE

For systems that are required to be protected against damage from earthquakes, load calculations shall be provided for sizing of sway bracing.

Materials and Equipment; G, AE

Manufacturer's catalog data included with the Sprinkler System Drawings for all items specified herein. The data shall be highlighted to show model, size, options, etc., that are intended for consideration. Data shall be adequate to demonstrate compliance with all contract requirements. In addition, a complete equipment list that includes equipment description, model number and quantity shall be provided.

Hydraulic Calculations; G, AE

Hydraulic calculations, including a drawing showing hydraulic reference points and pipe segments.

Spare Parts

Spare parts data shall be included for each different item of material and equipment specified.

Preliminary Tests; G, RE

Proposed procedures for Preliminary Tests, no later than 14 days prior to the proposed start of the tests. Proposed date and time to begin the preliminary tests.

Final Acceptance Test; G, RE

Proposed procedures for Final Acceptance Test, no later than 14 days prior to the proposed start of the tests. Proposed date and time to begin Final Acceptance Test, submitted with the Final Acceptance Test Procedures. Notification shall be provided at least 14 days prior to the proposed start of the test. Notification shall include a copy of the Contractor's Material & Test Certificates.

On-site Training; G,REO

Proposed On-site Training schedule, at least 14 days prior to the start of related training.

Fire Protection Specialist; G; RE

The name and documentation of certification of the proposed Fire Protection Specialists, no later than 14 days after the Notice to Proceed and prior to the submittal of the sprinkler system drawings and hydraulic calculations.

Sprinkler System Installer; G, RE

The name and documentation of certification of the proposed Sprinkler System Installer, concurrent with submittal of the Fire Protection Specialist Qualifications.

SD-06 Test Reports

Preliminary Test Report; G; RE

Three copies of the completed Preliminary Test Report, no later that 7 days after the completion of the Preliminary Tests. The Preliminary Tests Report shall include both the Contractor's Material and Test Certificate for Underground Piping and the Contractor's Material and Test Certificate for Aboveground Piping. All items in the Preliminary Tests Report shall be signed by the Fire Protection Specialist.

Final Acceptance Test Report; G, RE

Three copies of the completed Final Acceptance Tests Reports, no later that 7 days after the completion of the Final Acceptance Tests. All items in the Final Acceptance Report shall be signed by the Fire Protection Specialist.

SD-07 Certificates

Inspection by Fire Protection Specialist; G, RRE

Concurrent with the Final Acceptance Test Report, certification by the Fire Protection Specialist that the sprinkler system is

installed in accordance with the contract requirements, including signed approval of the Preliminary and Final Acceptance Test Reports.

SD-10 Operation and Maintenance Data

Operating and Maintenance Instructions

Six manuals listing step-by-step procedures required for system startup, operation, shutdown, and routine maintenance, at least 14 days prior to field training. The manuals shall include the manufacturer's name, model number, parts list, list of parts and tools that should be kept in stock by the owner for routine maintenance including the name of a local supplier, simplified wiring and controls diagrams, troubleshooting guide, and recommended service organization (including address and telephone number) for each item of equipment. Each service organization submitted shall be capable of providing 4 hour on-site response to a service call on an emergency basis.

1.7 HYDRAULIC CALCULATIONS

Hydraulic calculations shall be as outlined in NFPA 13 except that calculations shall be performed by computer using software intended specifically for fire protection system design using the design data shown on the drawings. Software that uses k-factors for typical branch lines is not acceptable. Calculations shall be based on the water supply data shown on the drawings. Calculations shall substantiate that the design area used in the calculations is the most demanding hydraulically. Water supply curves and system requirements shall be plotted on semi-logarithmic graph paper so as to present a summary of the complete hydraulic calculation. A summary sheet listing sprinklers in the design area and their respective hydraulic reference points, elevations, actual discharge pressures and actual flows shall be provided. Elevations of hydraulic reference points (nodes) shall be indicated. Documentation shall identify each pipe individually and the nodes connected thereto. The diameter, length, flow, velocity, friction loss, number and type fittings, total friction loss in the pipe, equivalent pipe length and Hazen-Williams coefficient shall be indicated for each pipe. For gridded systems, calculations shall show peaking of demand area friction loss to verify that the hydraulically most demanding area is being used. Also for gridded systems, a flow diagram indicating the quantity and direction of flows shall be included. A drawing showing hydraulic reference points (nodes) and pipe designations used in the calculations shall be included and shall be independent of shop drawings.

1.8 FIRE PROTECTION SPECIALIST

Work specified in this section shall be performed under the supervision of and certified by the Fire Protection Specialist. The Fire Protection Specialist shall be an individual who is a registered professional engineer and a Full Member of the Society of Fire Protection Engineers or who is certified as a Level III Technician by National Institute for Certification in Engineering Technologies (NICET) in the Automatic Sprinkler System Layout subfield of Fire Protection Engineering Technology in accordance with NICET 1014-7. The Fire Protection Specialist shall be regularly engaged in the design and installation of the type and complexity of system specified in the Contract documents, and shall have served in a similar capacity for at least three systems that have performed in the manner

intended for a period of not less than 6 months.

1.9 SPRINKLER SYSTEM INSTALLER

Work specified in this section shall be performed by the Sprinkler System Installer. The Sprinkler System Installer shall be regularly engaged in the installation of the type and complexity of system specified in the Contract documents, and shall have served in a similar capacity for at least three systems that have performed in the manner intended for a period of not less than 6 months.

1.10 REGULATORY REQUIREMENTS

Compliance with referenced NFPA standards is mandatory. This includes advisory provisions listed in the appendices of such standards, as though the word "shall" had been substituted for the word "should" wherever it appears. In the event of a conflict between specific provisions of this specification and applicable NFPA standards, this specification shall govern. Reference to "authority having jurisdiction" shall be interpreted to mean the Contracting Officer.

1.11 SPARE PARTS

The Contractor shall submit spare parts data for each different item of material and equipment specified. The data shall include a complete list of parts and supplies, with current unit prices and source of supply, and a list of parts recommended by the manufacturer to be replaced after 1 year and 3 years of service. A list of special tools and test equipment required for maintenance and testing of the products supplied by the Contractor shall be included.

1.12 SHOP DRAWINGS

The Sprinkler System Shop Drawings shall conform to the requirements established for working plans as prescribed in NFPA 13. Drawings shall include plan and elevation views demonstrating that the equipment will fit the allotted spaces with clearance for installation and maintenance. Each set of drawings shall include the following:

a. Descriptive index of drawings in the submittal with drawings listed in sequence by drawing number. A legend identifying device symbols, nomenclature, and conventions used.

b. Floor plans drawn to a scale not less than 1/8" = 1'-0" which clearly show locations of sprinklers, risers, pipe hangers, seismic separation assemblies, sway bracing, inspector's test connections, drains, and other applicable details necessary to clearly describe the proposed arrangement. Each type of fitting used and the locations of bushings, reducing couplings, and welded joints shall be indicated.

c. Actual center-to-center dimensions between sprinklers on branch lines and between branch lines; from end sprinklers to adjacent walls; from walls to branch lines; from sprinkler feed mains, cross-mains and branch lines to finished floor and roof or ceiling. A detail shall show the dimension from the sprinkler and sprinkler deflector to the ceiling in finished areas.

d. Longitudinal and transverse building sections showing

typical branch line and cross-main pipe routing as well as elevation of each typical sprinkler above finished floor.

e. Details of each type of riser assembly; pipe hanger; sway bracing for earthquake protection, and restraint of underground water main at point-of-entry into the building, and electrical devices and interconnecting wiring.

PART 2 PRODUCTS

2.1 STANDARD PRODUCTS

Materials and equipment shall be standard products of a manufacturer regularly engaged in the manufacture of such products and shall essentially duplicate items that have been in satisfactory use for at least 2 years prior to bid opening.

2.2 NAMEPLATES

All equipment shall have a nameplate that identifies the manufacturer's name, address, type or style, model or serial number, and catalog number.

2.3 REQUIREMENTS FOR FIRE PROTECTION SERVICE

Materials and Equipment shall have been tested by Underwriters Laboratories, Inc. and listed in UL Fire Prot Dir or approved by Factory Mutual and listed in FM P7825a and FM P7825b. Where the terms "listed" or "approved" appear in this specification, such shall mean listed in UL Fire Prot Dir or FM P7825a and FM P7825b

2.4 UNDERGROUND PIPING COMPONENTS

2.4.1 Pipe

Piping from a point 6 inches above the floor to a point 5 feet outside the building wall shall be ductile iron with a rated working pressure of 150 psi conforming to AWWA C151, with cement mortar lining conforming to AWWA C104. Piping more than 5 feet outside the building walls shall comply with Section 02510A WATER DISTRIBUTION SYSTEM.

2.4.2 Fittings and Gaskets

Fittings shall be ductile iron conforming to AWWA C110. Gaskets shall be suitable in design and size for the pipe with which such gaskets are to be used. Gaskets for ductile iron pipe joints shall conform to AWWA C111.

2.4.3 Gate Valve and Indicator Posts

Gate valves for underground installation shall be of the inside screw type with counter-clockwise rotation to open. Where indicating type valves are shown or required, indicating valves shall be gate valves with an approved indicator post of a length to permit the top of the post to be located 3 feet above finished grade. Gate valves and indicator posts shall be listed in UL Fire Prot Dir or FM P7825a and FM P7825b.

2.5 ABOVEGROUND PIPING COMPONENTS

Aboveground piping shall be steel or copper.

2.5.1 Steel Piping Components

2.5.1.1 Steel Pipe

Except as modified herein, steel pipe shall be black as permitted by NFPA 13 and shall conform to applicable provisions of ASTM A 795, ASTM A 53/A 53M, or ASTM A 135. Pipe in which threads or grooves are cut shall be Schedule 40 or shall be listed by Underwriters' Laboratories to have a corrosion resistance ratio (CRR) of 1.0 or greater after threads or grooves are cut. Pipe shall be marked with the name of the manufacturer, kind of pipe, and ASTM designation. Pipe 2 inch and smaller shall be minimum Schedule 40. Pipe larger than 2 inch shall be minimum Schedule 10.

2.5.1.2 Fittings for Non-Grooved Steel Pipe

Fittings shall be cast iron conforming to ASME B16.4, steel conforming to ASME B16.9 or ASME B16.11, or malleable iron conforming to ASME B16.3. Galvanized fittings shall be used for piping systems or portions of piping systems utilizing galvanized piping. Fittings into which sprinklers, drop nipples or riser nipples (sprigs) are screwed shall be threaded type. Plain-end fittings with mechanical couplings, fittings that use steel gripping devices to bite into the pipe and segmented welded fittings shall not be used.

2.5.1.3 Grooved Mechanical Joints and Fittings

Joints and fittings shall be designed for not less than 175 psi service and shall be the product of the same manufacturer;segmented welded fittings shall not be used. Fitting and coupling houses shall be malleable iron conforming to ASTM A 47/A 47M, Grade 32510; ductile iron conforming to ASTM A 536, Grade 65-45-12. Gasket shall be the flush type that fills the entire cavity between the fitting and the pipe. Nuts and bolts shall be heat-treated steel conforming to ASTM A 183 and shall be cadmium plated or zinc electroplated.

2.5.1.4 Flanges

Flanges shall conform to NFPA 13 and ASME B16.1. Gaskets shall be non-asbestos compressed material in accordance with ASME B16.21, 1/16 inch thick, and full face or self-centering flat ring type.

2.5.1.5 Bolts, Nut, and Washers

Bolts shall be squarehead conforming to ASME B18.2.1 and shall extend no less than three full threads beyond the nut with bolts tightened to the required torque. Nuts shall be hexagon type conforming to ASME B18.2.2 . Washers shall meet the requirements of ASTM F 436. Flat circular washers shall be provided under all bolt heads and nuts.

2.5.2 Copper Tube Components

2.5.2.1 Copper Tube

Copper tube shall conform to ASTM B 88, Types L and M.

2.5.2.2 Copper Fittings and Joints

Cast copper alloy solder-joint pressure fittings shall conform to ASME B16.18 and wrought copper and bronze solder-joint pressure fittings shall

conform to ASME B16.22 and ASTM B 75. Cast copper alloy fittings for flared copper tube shall conform to ASME B16.26and ASTM B 62. Brass or bronze adapters for brazed tubing may be used for connecting tubing to flanges and to threaded ends of valves and equipment. Extracted brazed tee joints produced with an acceptable tool and installed as recommended by the manufacturer may be used. Grooved mechanical joints and fittings shall be designed for not less than 125 psig service and shall be the product of the same manufacturer. Grooved fitting and mechanical coupling housing shall be ductile iron conforming to ASTM A 536. Gaskets for use in grooved joints shall be molded synthetic polymer of pressure responsive design and shall conform to ASTM D 2000 for circulating medium up to 230 degrees F. Grooved joints shall conform to AWWA C606. Coupling nuts and bolts for use in grooved joints shall be steel and shall conform to ASTM A 183.

2.5.3 Pipe Hangers

Hangers shall be listed in UL Fire Prot Dir or FM P7825a and FM P7825b and of the type suitable for the application, construction, and pipe type and sized to be supported.

2.5.4 Valves

2.5.4.1 Control Valve and Gate Valve

Manually operated sprinkler control valve and gate valve shall be outside stem and yoke (OS&Y) type and shall be listed in UL Bld Mat Dir or FM P7825a and FM P7825b.

2.5.4.2 Check Valve

Check valve 2 inches and larger shall be listed in UL Bld Mat Dir or FM P7825a and FM P7825b. Check valves 4 inches and larger shall be of the swing type with flanged cast iron body and flanged inspection plate, shall have a clear waterway and shall meet the requirements of MSS SP-71, for Type 3 or 4.

2.6 ALARM CHECK VALVE ASSEMBLY

Assembly shall include an alarm check valve, standard trim piping, pressure gauges, bypass, retarding chamber, testing valves, main drain, and other components as required for a fully operational system.

2.7 WATERFLOW ALARM

Mechanically operated, exterior-mounted, water motor alarm assembly shall be provided and installed in accordance with NFPA 13. Water motor alarm assembly shall include a body housing, impeller or pelton wheel, drive shaft, striker assembly, gong, wall plate and related components necessary for complete operation. Minimum 3/4 inch galvanized piping shall be provided between the housing and the alarm check valve. Drain piping from the body housing shall be minimum 1 inch galvanized and shall be arranged to drain to the outside of the building. Piping shall be galvanized both on the inside and outside surfaces.

2.8 ALARM INITIATING AND SUPERVISORY DEVICES

2.8.1 Sprinkler Waterflow Indicator Switch, Vane Type

Switch shall be vane type with a pipe saddle and cast aluminum housing.

The electro-mechanical device shall include a flexible, low-density polyethylene paddle conforming to the inside diameter of the fire protection pipe. The device shall sense water movements and be capable of detecting a sustained flow of 10 gpm or greater. The device shall contain a retard device adjustable from 0 to 90 seconds to reduce the possibility of false alarms caused by transient flow surges. The switch shall be tamper resistant and contain two SPDT (Form C) contacts arranged to transfer upon removal of the housing cover, and shall be equipped with a silicone rubber gasket to assure positive water seal and a dustproof cover and gasket to seal the mechanism from dirt and moisture.

2.8.2 Valve Supervisory (Tamper) Switch

Switch shall be suitable for mounting to the type of control valve to be supervised open. The switch shall be tamper resistant and contain one set of SPDT (Form C) contacts arranged to transfer upon removal of the housing cover or closure of the valve of more than two rotations of the valve stem.

2.9 FIRE DEPARTMENT CONNECTION

Fire department connection shall be projecting type with cast brass body, matching wall escutcheon lettered "Auto Spkr" with a polished brass finish. The connection shall have two inlets with individual self-closing clappers, caps with drip drains and chains. Female inlets shall have 2-1/2 inch diameter American National Fire Hose Connection Screw Threads (NH) per NFPA 1963.

2.10 SPRINKLERS

Sprinklers with internal O-rings shall not be used. Sprinklers shall be used in accordance with their listed coverage limitations. Temperature classification shall be ordinary. Sprinklers in high heat areas including attic spaces or in close proximity to unit heaters shall have temperature classification in accordance with NFPA 13. Extended coverage sprinklers shall not be used.

2.10.1 Pendent Sprinkler

Pendent sprinkler shall be of the fusible strut or glass bulb type, quick-response type with nominal 1/2 inchor 17/32 inch orifice. Pendent sprinklers shall have a polished chrome finish.

2.10.2 Upright Sprinkler

Upright sprinkler shall be chrome-plated quick-response type and shall have a nominal 1/2 inch or 17/32 inch orifice.

2.10.3 Sidewall Sprinkler

Sidewall sprinkler shall have a nominal 1/2 inch orifice. Sidewall sprinkler shall have a polished chrome finish. Sidewall sprinkler shall be the quick-response type.

2.11 DISINFECTING MATERIALS

2.11.1 Liquid Chlorine

Liquid chlorine shall conform to AWWA B301.

2.11.2 Hypochlorites

Calcium hypochlorite and sodium hypochlorite shall conform to AWWA B300.

2.12 ACCESSORIES

2.12.1 Sprinkler Cabinet

Spare sprinklers shall be provided in accordance with NFPA 13 and shall be packed in a suitable metal or plastic cabinet. Spare sprinklers shall be representative of, and in proportion to, the number of each type and temperature rating of the sprinklers installed. At least one wrench of each type required shall be provided.

2.12.2 Pendent Sprinkler Escutcheon

Escutcheon shall be one-piece metallic type with a depth of less than 3/4 inch and suitable for installation on pendent sprinklers. The escutcheon shall have a factory finish that matches the pendent sprinkler heads.

2.12.3 Pipe Escutcheon

Escutcheon shall be polished chromium-plated zinc alloy, or polished chromium-plated copper alloy. Escutcheons shall be either one-piece or split-pattern, held in place by internal spring tension or set screw.

2.12.4 Identification Sign

Valve identification sign shall be minimum 6 inches wide x 2 inches high with enamel baked finish on minimum 18 gauge steel or 0.024 inch aluminum with red letters on a white background or white letters on red background. Wording of sign shall include, but not be limited to "main drain," "auxiliary drain," "inspector's test," "alarm test," "alarm line," and similar wording as required to identify operational components.

2.13 DOUBLE-CHECK VALVE BACKFLOW PREVENTION ASSEMBLY

Double-check backflow prevention assembly shall comply with ASSE 1015. The assembly shall have a bronze, cast-iron or stainless steel body with flanged ends. The assembly shall include pressure gauge test ports and OS&Y shutoff valves on the inlet and outlet, 2-positive-seating check valve for continuous pressure application, and four test cocks. Assemblies shall be rated for working pressure of 150 psi The maximum pressure loss shall be 6 psi at a flow rate equal to the sprinkler water demand, at the location of the assembly. A test port for a pressure gauge shall be provided both upstream and downstream of the double check backflow prevention assembly valves.

2.14 WALL HYDRANT

Wall hydrant shall be, 2-way projecting type with cast brass body, matching wall escutcheon lettered "Wall Hydrant" with polished brass finish. The connection shall have two outlets with caps and chains.

PART 3 EXECUTION

3.1 FIRE PROTECTION RELATED SUBMITTALS

The Fire Protection Specialist shall prepare a list of the submittals from

the Contract Submittal Register that relate to the successful installation of the sprinkler systems(s). The submittals identified on this list shall be accompanied by a letter of approval signed and dated by the Fire Protection Specialist when submitted to the Government.

3.2 INSTALLATION REQUIREMENTS

The installation shall be in accordance with the applicable provisions of NFPA 13, NFPA 24 and publications referenced therein. Installation of in-rack sprinklers shall comply with applicable provisions of NFPA 13.

3.3 INSPECTION BY FIRE PROTECTION SPECIALIST

The Fire Protection Specialist shall inspect the sprinkler system periodically during the installation to assure that the sprinkler system is being provided and installed in accordance with the contract requirements. The Fire Protection Specialist shall witness the preliminary and final tests, and shall sign the test results. The Fire Protection Specialist, after completion of the system inspections and a successful final test, shall certify in writing that the system has been installed in accordance with the contract requirements. Any discrepancy shall be brought to the attention of the Contracting Officer in writing, no later than three working days after the discrepancy is discovered.

3.4 ABOVEGROUND PIPING INSTALLATION

3.4.1 Protection of Piping Against Earthquake Damage

The system piping shall be protected against damage from earthquakes. Seismic protection shall include flexible and rigid couplings, sway bracing, seismic separation assemblies where piping crosses building seismic separation joints, and other features as required by NFPA 13 for protection of piping against damage from earthquakes.

3.4.2 Piping in Exposed Areas

Exposed piping shall be installed so as not to diminish exit access widths, corridors or equipment access. Exposed horizontal piping, including drain piping, shall be installed to provide maximum headroom.

3.4.3 Piping in Finished Areas

In areas with suspended or dropped ceilings and in areas with concealed spaces above the ceiling, piping shall be concealed above ceilings. Piping shall be inspected, tested and approved before being concealed. Risers and similar vertical runs of piping in finished areas shall be concealed.

3.4.4 Pendent Sprinklers

Drop nipples to pendent sprinklers shall consist of minimum 1 inch pipe with a reducing coupling into which the sprinkler shall be threaded. Hangers shall be provided on arm-overs to drop nipples supplying pendent sprinklers when the arm-over exceeds 12 inches. Where sprinklers are installed below suspended or dropped ceilings, drop nipples shall be cut such that sprinkler ceiling plates or escutcheons are of a uniform depth throughout the finished space. The outlet of the reducing coupling shall not extend more than 1 inch below the underside of the ceiling. On pendent sprinklers installed below suspended or dropped ceilings, the distance from the sprinkler deflector to the underside of the ceiling shall not exceed 4

inches. Recessed pendent sprinklers shall be installed such that the distance from the sprinkler deflector to the underside of the ceiling shall not exceed the manufacturer's listed range and shall be of uniform depth throughout the finished area.

3.4.4.1 Pendent Sprinkler Locations

Pendent sprinklers in suspended ceilings shall be a minimum of 6 inches from ceiling grid.

3.4.5 Upright Sprinklers

Riser nipples or "sprigs" to upright sprinklers shall contain no fittings between the branch line tee and the reducing coupling at the sprinkler. Riser nipples exceeding 30 inches in length shall be individually supported.

3.4.6 Pipe Joints

Pipe joints shall conform to NFPA 13, except as modified herein. Not more than four threads shall show after joint is made up. Welded joints will be permitted, only if welding operations are performed as required by NFPA 13 at the Contractor's fabrication shop, not at the project construction site. Flanged joints shall be provided where indicated or required by NFPA 13. Grooved pipe and fittings shall be prepared in accordance with the manufacturer's latest published specification according to pipe material, wall thickness and size. Grooved couplings, fittings and grooving tools shall be products of the same manufacturer. For copper tubing, pipe and groove dimensions shall comply with the tolerances specified by the coupling manufacturer. The diameter of grooves made in the field shall be measured using a "go/no-go" gauge, vernier or dial caliper, narrow-land micrometer, or other method specifically approved by the coupling manufacturer for the intended application. Groove width and dimension of groove from end of pipe shall be measured and recorded for each change in grooving tool setup to verify compliance with coupling manufacturer's tolerances. Grooved joints shall not be used in concealed locations, such as behind solid walls or ceilings, unless an access panel is shown on the drawings for servicing or adjusting the joint.

3.4.7 Reducers

Reductions in pipe sizes shall be made with one-piece tapered reducing fittings. The use of grooved-end or rubber-gasketed reducing couplings will not be permitted. When standard fittings of the required size are not manufactured, single bushings of the face type will be permitted. Where used, face bushings shall be installed with the outer face flush with the face of the fitting opening being reduced. Bushings shall not be used in elbow fittings, in more than one outlet of a tee, in more than two outlets of a cross, or where the reduction in size is less than 1/2 inch.

3.4.8 Pipe Penetrations

Cutting structural members for passage of pipes or for pipe-hanger fastenings will not be permitted. Pipes that must penetrate concrete or masonry walls or concrete floors shall be core-drilled and provided with pipe sleeves. Each sleeve shall be Schedule 40 galvanized steel, ductile iron or cast iron pipe and shall extend through its respective wall or floor and be cut flush with each wall surface. Sleeves shall provide required clearance between the pipe and the sleeve per NFPA 13. The space between the sleeve and the pipe shall be firmly packed with mineral wool

insulation. Where pipes penetrate fire walls, fire partitions, or floors, pipes shall be fire stopped in accordance with Section 07840 FIRESTOPPING. In penetrations that are not fire-rated or not a floor penetration, the space between the sleeve and the pipe shall be sealed at both ends with plastic waterproof cement that will dry to a firm but pliable mass or with a mechanically adjustable segmented elastomer seal.

3.4.9 Escutcheons

Escutcheons shall be provided for pipe penetration of ceilings and walls. Escutcheons shall be securely fastened to the pipe at surfaces through which piping passes.

3.4.10 Inspector's Test Connection

Unless otherwise indicated, test connection shall consist of 1 inch pipe connected at the riser as a combination test and drain valve; a test valve located approximately 7 feet above the floor; a smooth bore brass outlet equivalent to the smallest orifice sprinkler used in the system; and a painted metal identification sign affixed to the valve with the words "Inspector's Test." The discharge orifice shall be located outside the building wall directed so as not to cause damage to adjacent construction or landscaping during full flow discharge.

3.4.11 Drains

Main drain piping shall be provided to discharge at a safe point outside the building. Auxiliary drains shall be provided as required by NFPA 13. All drains and test connections shall discharge onto a 2'x2' splashblock.

3.4.12 Installation of Fire Department Connection

Connection shall be mounted on the exterior wall approximately 3 feet above finished grade. The piping between the connection and the check valve shall be provided with an automatic drip in accordance with NFPA 13 and arranged to drain to the outside.

3.4.13 Identification Signs

Signs shall be affixed to each control valve, inspector test valve, main drain, auxiliary drain, test valve, and similar valves as appropriate or as required by NFPA 13. Hydraulic design data nameplates shall be permanently affixed to each sprinkler riser as specified in NFPA 13.

3.5 UNDERGROUND PIPING INSTALLATION

The fire protection water main shall be laid, and joints anchored, in accordance with NFPA 24. Minimum depth of cover shall be 3 feet. The supply line shall terminate inside the building with a flanged piece, the bottom of which shall be set not less than 6 inches above the finished floor. A blind flange shall be installed temporarily on top of the flanged piece to prevent the entrance of foreign matter into the supply line. A concrete thrust block shall be provided at the elbow where the pipe turns up toward the floor. In addition, joints shall be anchored in accordance with NFPA 24 using pipe clamps and steel rods from the elbow to the flange above the floor and from the elbow to a pipe clamp in the horizontal run of pipe. Buried steel components shall be provided with a corrosion protective coating in accordance with AWWA C203. Piping more than 5 feet outside the building walls shall meet the requirements of Section 02510A

WATER DISTRIBUTION SYSTEM.

3.6 EARTHWORK

Earthwork shall be performed in accordance with applicable provisions of Section 02300 EARTHWORK.

3.7 ELECTRICAL WORK

Except as modified herein, electric equipment and wiring shall be in accordance with Section 16415A ELECTRICAL WORK, INTERIOR. Alarm signal wiring connected to the building fire alarm control system shall be in accordance with Section 13851A FIRE DETECTION AND ALARM SYSTEM, ADDRESSABLE. All wiring for supervisory and alarm circuits shall be #14 AWG solid copper installed in metallic tubing or conduit. Wiring color code shall remain uniform throughout the system.

3.8 DISINFECTION

After all system components are installed and hydrostatic test(s) are successfully completed, each portion of the sprinkler system to be disinfected shall be thoroughly flushed with potable water until all entrained dirt and other foreign materials have been removed before introducing chlorinating material. Flushing shall be conducted by removing the flushing fitting of the cross mains and of the grid branch lines, and then back-flushing through the sprinkler main drains. The chlorinating material shall be hypochlorites or liquid chlorine. Water chlorination procedure shall be in accordance with AWWA C651 and AWWA C652. The chlorinating material shall be fed into the sprinkler piping at a constant rate of 50 parts per million (ppm). A properly adjusted hypochlorite solution injected into the system with a hypochlorinator, or liquid chlorine injected into the system through a solution-fed chlorinator and booster pump shall be used. Chlorination application shall continue until the entire system if filled. The water shall remain in the system for a minimum of 24 hours. Each valve in the system shall be opened and closed several times to ensure its proper disinfection. Following the 24-hour period, no less than 25 ppm chlorine residual shall remain in the system. The system shall then be flushed with clean water until the residual chlorine is reduced to less than one part per million. Samples of water in disinfected containers for bacterial examination will be taken from several system locations which are approved by the Contracting Officer. Samples shall be tested for total coliform organisms (coliform bacteria, fecal coliform, streptococcal, and other bacteria) in accordance with AWWA EWW. The testing method shall be either the multiple-tube fermentation technique or the membrane-filter technique. The disinfection shall be repeated until tests indicate the absence of coliform organisms (zero mean coliform density per 100 milliliters) in the samples for at least 2 full days. The system will not be accepted until satisfactory bacteriological results have been obtained. After successful completion, verify installation of all sprinklers and plugs and pressure test the system.

3.9 PIPE COLOR CODE MARKING

Color code marking of piping shall be as specified in Section 09900 PAINTS AND COATINGS.

3.10 PRELIMINARY TESTS

The system, including the underground water mains, and the aboveground

piping and system components, shall be tested to assure that equipment and components function as intended. The underground and aboveground interior piping systems and attached appurtenances subjected to system working pressure shall be tested in accordance with NFPA 13 and NFPA 24. Upon completion of specified tests, the Contractor shall complete certificates as specified in paragraph SUBMITTALS.

3.10.1 Underground Piping

3.10.1.1 Flushing

Underground piping shall be flushed in accordance with NFPA 24. This includes the requirement to flush the lead-in connection to the fire protection system at a flow rate not less that the calculated maximum water demand rate of the system.

3.10.1.2 Hydrostatic Testing

New underground piping shall be hydrostatically tested in accordance with NFPA 24. The allowable leakage shall be measured at the specified test pressure by pumping from a calibrated container. The amount of leakage at the joints shall not exceed 2 quarts per hour per 100 gaskets or joints, regardless of pipe diameter.

3.10.2 Aboveground Piping

3.10.2.1 Hydrostatic Testing

Aboveground piping shall be hydrostatically tested in accordance with NFPA 13 at not less than 200 psi or 50 psi in excess of maximum system operating pressure and shall maintain that pressure without loss for 2 hours. There shall be no drop in gauge pressure or visible leakage when the system is subjected to the hydrostatic test. The test pressure shall be read from a gauge located at the low elevation point of the system or portion being tested.

3.10.2.2 Backflow Prevention Assembly Forward Flow Test

Each backflow prevention assembly shall be tested at system flow demand, including all applicable hose streams, as specified in NFPA 13. The Contractor shall provide all equipment and instruments necessary to conduct a complete forward flow test, including2.5 inch diameter hoses, playpipe nozzles, calibrated pressure gauges, and pitot tube gauge. The Contractor shall provide all necessary supports to safely secure hoses and nozzles during the test. At the system demand flow, the pressure readings and pressure drop (friction) across the assembly shall be recorded. A metal placard shall be provided on the backflow prevention assembly that lists the pressure readings both upstream and downstream of the assembly, total pressure drop, and the system test flow rate. The pressure drop shall be compared to the manufacturer's data.

3.10.3 Testing of Alarm Devices

Each alarm switch shall be tested by flowing water through the inspector's test connection. Each water-operated alarm devices shall be tested to verify proper operation.

3.10.4 Main Drain Flow Test

Following flushing of the underground piping, a main drain test shall be made to verify the adequacy of the water supply. Static and residual pressures shall be recorded on the certificate specified in paragraph SUBMITTALS. In addition, a main drain test shall be conducted each time after a main control valve is shut and opened.

3.11 FINAL ACCEPTANCE TEST

Final Acceptance Test shall begin only when the Preliminary Test Report has been approved. The Fire Protection Specialist shall conduct the Final Acceptance Test and shall provide a complete demonstration of the operation of the system. This shall include operation of control valves and flowing of inspector's test connections to verify operation of associated waterflow alarm switches. After operation of control valves has been completed, the main drain test shall be repeated to assure that control valves are in the open position. In addition, the representative shall have available copies of as-built drawings and certificates of tests previously conducted. The installation shall not be considered accepted until identified discrepancies have been corrected and test documentation is properly completed and received. The Contractor shall submit the Final Acceptance Test Report as specified in the Submittals paragraph.

3.12 ON-SITE TRAINING

The Fire Protection Specialist shall conduct a training course for operating and maintenance personnel as designated by the Contracting Officer. Training shall be provided for a period of 8 hours of normal working time and shall start after the system is functionally complete and after the Final Acceptance Test. The On-Site Training shall cover all of the items contained in the approved Operating and Maintenance Instructions.

-- End of Section --

SECTION TABLE OF CONTENTS

DIVISION 13 - SPECIAL CONSTRUCTION

SECTION 13965A

WET CHEMICAL FIRE EXTINGUISHING SYSTEM

01/04

PART 1 GENERAL

1.1 REFERENCES
1.2 SUBMITTALS
1.3 GENERAL REQUIREMENTS
1.3.1 System Description
1.3.2 Regulatory Requirements
1.3.3 Installation Drawings
1.3.4 Installation Technician
1.3.5 Similar Services
1.4 COORDINATION OF TRADES
1.5 DELIVERY AND STORAGE

PART 2 PRODUCTS

2.1 STANDARD PRODUCTS
2.2 PIPING COMPONENTS
2.2.1 Pipe and Fittings
2.2.2 Nozzles
2.3 SYSTEM CONTROLS
2.4 WET CHEMICAL
2.5 IDENTIFICATION SIGNS

PART 3 EXECUTION

3.1 INSTALLATION
3.2 PRELIMINARY TESTS
3.3 FINAL ACCEPTANCE TESTS
3.4 FIELD TRAINING

-- End of Section Table of Contents --

UFGS-13965A (January 2004)

SECTION 13965A

WET CHEMICAL FIRE EXTINGUISHING SYSTEM
01/04

PART 1 GENERAL

1.1 REFERENCES

The publications listed below form a part of this specification to the extent referenced. The publications are referred to within the text by the basic designation only.

FM GLOBAL (FM)

FM P7825a	(2003) Approval Guide Fire Protection
FM P7825b	(2003) Approval Guide Electrical Equipment

NATIONAL FIRE PROTECTION ASSOCIATION (NFPA)

NFPA 17A	(2002) Wet Chemical Extinguishing Systems
NFPA 96	(2001) Ventilation Control and Fire Protection of Commercial Cooking Operations

UNDERWRITERS LABORATORIES (UL)

UL Fire Prot Dir	(2003) Fire Protection Equipment Directory

1.2 SUBMITTALS

Government approval is required for submittals with a "G" designation; submittals not having a "G" designation are for information only or as otherwise designated. When used, a designation following the "G" designation identifies the office that will review the submittal for the Government. The following shall be submitted in accordance with Section 01330 SUBMITTAL PROCEDURES:

SD-02 Shop Drawings

Wet Chemical Fire Extinguishing System; G, AE

Drawings consisting of system layout including assembly and installation details and electrical connection diagrams; piping layout showing pipe sizes, lengths, and supports. Drawings shall include any information required to demonstrate that the system has been coordinated and will function as intended and shall show system relationship to items it protects and clearances required for operation and maintenance. Drawings shall also include conduit, cables, manual actuation stations and fusible links.

SD-03 Product Data

Similar Services

A statement of qualifications as specified.

Wet Chemical Fire Extinguishing System; G, RO

Manufacturer's catalog data including detail drawings for the following items. The data shall be highlighted to show model, size, options, etc., that are intended for consideration and shall be adequate to demonstrate compliance with contract requirements.

a. Storage containers and mounting brackets

b. Fusible links, cables, conduit, corner pulleys, and link mounting frames/brackets

c. Release mechanisms

d. Valves

e. Discharge nozzles

f. Piping components

g. Remote manual actuation stations

h. Fuel and power shutoff

i. Alarms, alarm devices, alarm interface(s), control panels

Preliminary Tests; G, RO

Proposed test procedures for preliminary test, at least 2 weeks before the start of related testing. System diagrams that show system layout and typed condensed normal and emergency operating procedures, methods for checking the system for normal, safe operation, and procedures for manual actuation shall be framed under glass or laminated plastic. After approval, these items shall be posted where directed.

Final Acceptance Tests; G, RO

Proposed test procedures for final acceptance test, at least 2 weeks before the start of related testing. Proposed test schedule for acceptance test, at least 2 weeks before the start of related testing.

Field Training

Proposed schedule for field training, at least 2 weeks before the start of related training.

SD-06 Test Reports

Preliminary Tests

Test report for the preliminary tests in booklet form, upon completion of testing. Report shall document test results including repairs and adjustments made, and final test results.

Final Acceptance Tests

Test report for the final acceptance tests in booklet form, upon completion of testing. Report shall document test results including repairs and adjustments made, and final test results. The weight of each storage container shall be recorded before final acceptance test and after test has been completed and containers recharged.

SD-07 Certificates

Installation Technician; G, RO

Concurrent with statement of similar services, manufacturer's certification of installation technician.

Installation Drawings; G, RO

Concurrent with installation drawings, manufacturer's certification of installation drawings.

SD-10 Operation and Maintenance Data

Wet Chemical Fire Extinguishing System

Six manuals listing step-by-step procedures required for system actuation (automatic and manual), recharging, and routine maintenance, at least 2 weeks before field training. The manuals shall include the manufacturer's name, model number, parts list, list of tools and parts that should be kept in stock by the owner for routine maintenance including the name of a local supplier, simplified wiring and control diagrams, troubleshooting guide, and recommended service organization (including address and telephone number). Service organization shall be capable of providing 4 hour onsite response to a service call on an emergency basis.

1.3 GENERAL REQUIREMENTS

1.3.1 System Description

Each of the following cooking equipment items ramges, including the exhaust hood, grease filter, and exhaust duct serving the item shall be protected by preengineered wet chemical fire extinguishing system. System shall be installed with all accessories necessary for system to operate in accordance with manufacturer's instructions and as specified herein.

1.3.2 Regulatory Requirements

System application, design, and installation shall comply with NFPA 17A and NFPA 96, except as follows:

a. Compliance shall include conformance to the advisory provisions by changing "should" to "shall."

b. System components shall be listed in UL Fire Prot Dir or approved by FM P7825a and FM P7825b for use with wet chemical fire extinguishing systems.

c. Reference to the "authority having jurisdiction" shall be

interpreted to mean the Contracting Officer.

d. The use of grease extractors does not eliminate the requirement that duct systems, grease removal devices, and hoods be protected by the wet chemical extinguishing system.

1.3.3 Installation Drawings

Installation drawings shall be prepared by a representative of the manufacturer to ensure compliance with the requirements listed herein and with all manufacturer's requirements and recommendations.

1.3.4 Installation Technician

The installation technician shall have been trained by the system manufacturer for system installation, operation, and maintenance.

1.3.5 Similar Services

The Contractor shall submit a statement demonstrating successful completion of similar services on at least five projects of similar size and scope, at least 2 weeks before submittal of other items required by this section.

1.4 COORDINATION OF TRADES

Each system shall be coordinated with the equipment, hood, and exhaust ducts that it protects along with other construction in order to eliminate any interference.

1.5 DELIVERY AND STORAGE

Equipment delivered and placed in storage shall be stored with protection from the weather, humidity and temperature variations, dirt and dust, or other contaminants.

PART 2 PRODUCTS

2.1 STANDARD PRODUCTS

System components shall be the standard products of a manufacturer regularly engaged in the manufacturing of products that are of similar material, design and workmanship. The standard products shall have been in satisfactory commercial or industrial use for 2 years before bid opening. The 2-year experience shall include installations of systems under similar circumstances and of similar size. Systems shall be supported by a service organization.

2.2 PIPING COMPONENTS

2.2.1 Pipe and Fittings

Pipe and fittings shall be Schedule 40 stainless steel. Stainless steel tubing may be used in accordance with manufacturer's recommendations. Galvanized pipe shall not be used.

2.2.2 Nozzles

Nozzles shall be stainless steel and shall be equipped with an integral strainer to prevent matter inside the distribution piping from clogging the

nozzle orifice. Each nozzle orifice shall be provided with a seal to protect the nozzle from clogging by grease or other obstructions. This seal shall detach upon actuation.

2.3 SYSTEM CONTROLS

Each system shall be actuated by fusible link and by a remote manual actuation station connected to the extinguishing system release mechanism by cable. Remote manual actuation stations shall be located along the path of egress and shall automatically actuate the building fire alarm system. The system controls shall automatically shut off fuel flow and electrical power to the protected appliances and other appliances located under the ventilating system protected by the extinguishing system upon system actuation. All cables used shall be stainless steel with corner pulleys employing stainless steel ball bearings at all corners. All cable and wiring shall be enclosed in conduit.

2.4 WET CHEMICAL

The wet chemical shall not have an adverse effect on stainless steel during exposure periods of up to 24 hours.

2.5 IDENTIFICATION SIGNS

Identification signs shall be located at each remote manual actuation station. Signs shall be fabricated of rigid plastic, red in color, with engraved white letters that are a minimum 0.25 inches in height. Each sign shall be engraved with "Fire Extinguishing System" and with a brief description of the equipment protected.

PART 3 EXECUTION

3.1 INSTALLATION

Installation shall be performed by the installation technician in accordance with system manufacturer's instructions. Ductwork access doors shall be provided where indicated and at any items requiring service and inspection, including nozzles and fusible links. Ductwork access doors shall be in accordance with Section 15895 AIR SUPPLY, DISTRIBUTION, VENTILATION, AND EXHAUST SYSTEM.

3.2 PRELIMINARY TESTS

After installation has been completed, each system shall be actuated by both fusible link and by remote actuation station to demonstrate proper function of all components, including alarms and fuel flow and power shut off. Actuation by fusible link shall be in a manner approved by the system manufacturer. Test containers, pressurized with either nitrogen or air to normal system operating pressure and of the same size as actual operating containers shall be discharged into system. The seals shall release as during normal actuation. After each discharge, the nozzles shall be removed, disassembled, and strainers shall be cleaned. System piping shall be inspected and cleaned as necessary. All functions of system operation shall be verified, including switches, shutdown of fuel and power to appliances protected by the system or served by the same ventilation system, uniform delivery of air or nitrogen, and activation of alarms. Nozzle seals/covers shall be replaced after the preliminary tests are complete. In the event portions of the tests are unsuccessful, repairs shall be made and the entire test repeated until successful.

3.3 FINAL ACCEPTANCE TESTS

System shall be actuated by both fusible link and remote manual actuation station and all system functions shall be verified as described in Paragraph PRELIMINARY TESTS using test containers specified for preliminary tests. Each nozzle shall be provided with a plastic container, hose, and hose fitting to capture all wet chemical discharged. All tests or checks recommended by the manufacturer shall also be performed. In the event portions of the tests are unsuccessful, repairs shall be made and the entire test repeated until successful. Nozzle seals/covers shall be replaced after the final acceptance tests are complete. The system shall be returned to normal operating condition after the completion of testing and wet chemical containers expended shall be recharged and verified leak tight. Extinguishing system and equipment and duct protected by the extinguishing shall be cleaned after completion of testing. Any damage shall be repaired by the Contractor. The weight of each storage container shall be recorded before final acceptance test and after test has been completed and containers recharged.

3.4 FIELD TRAINING

The Contractor shall conduct a training course for operating and maintenance personnel as designated by the Contracting Officer. Training shall be provided for a period of 4 hours of normal working time and shall start after the system is functionally complete and after the Final Acceptance Test. The field instruction shall cover all of the items contained in the approved Operation and Maintenance Instructions.

-- End of Section --