STATE OF
NORTH CAROLINA
DEPT. OF TRANSPORTATION
DIVISION OF HIGHWAYS
RALEIGH, N.C.

ENGLISH STANDARD DRAWING FOR REINFORCED CONCRETE FLARED END SECTION

12" THRU 48" PIPE

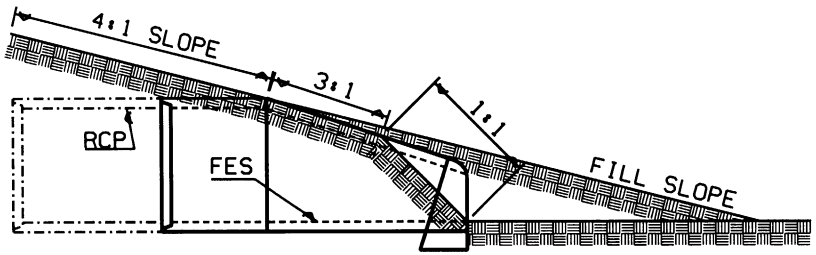

INSTALLATION SECTION VIEW

PREFERRED METHOD OF FILL SLOPE PLACEMENT

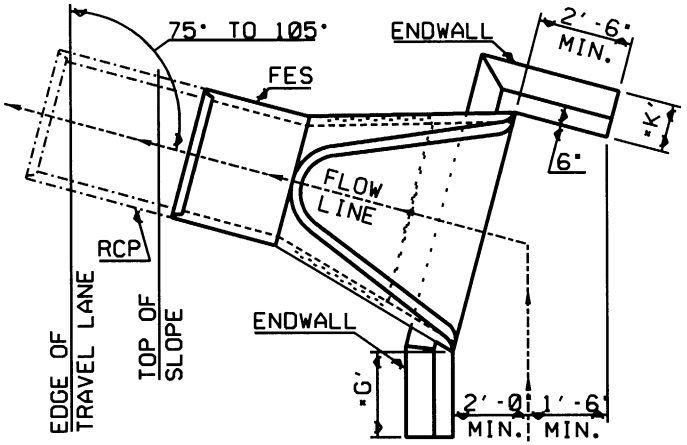

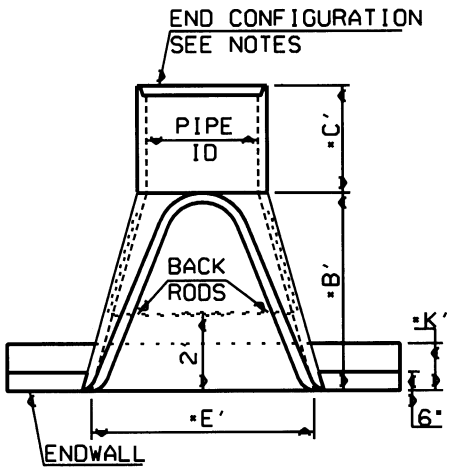

PLAN VIEW

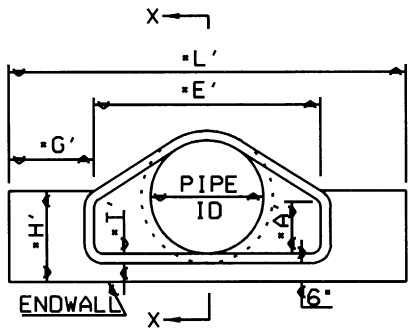

END VIEW

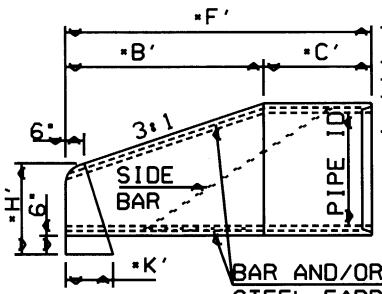

SECTION X-X

GENERAL NOTES:
- END SECTIONS TO BE USED AS SHOWN BY PLANS OR AS DIRECTED BY THE ENGINEER.
- ENDWALLS TO USED AS SHOWN BY PLANS OR AS DIRECTED BY THE ENGINEER.
- CLASS "B" CONCRETE TO BE USED IN ENDWALLS.
- CHAMFER ALL EXTERIOR CORNERS 1".
- FLARED END SECTIONS ARE NORMALLY USED ON PIPES WITH SKEW ANGLES FROM 75° TO 105°.
- FLARED END SECTION - END CONFIGURATION
  - INLET LOCATION - TONGUE
  - OUTLET LOCATION - GROOVE

DIMENSIONS AND CONCRETE QUANTITIES FOR END SECTIONS AND ENDWALLS

PIPE I.D.	END SECTIONS A	B	C	E	F	T	STRAIGHT ENDWALLS G	H	K	L	YD³	(COMMON DIM.) SKEWED ENDWALLS G	L	YD³
12"	4"	2'-0"	4'-1"	2'-0"	6'-1"	1"	1'-2"	1'-6"	0'-9"	4'-4"	0.1	1'-0"	6'-4"	0.2
15"	6"	2'-3"	3'-10	2'-6"	6'-1"	1"	1'-2"	1'-6"	0'-9"	4'-10	0.1	1'-0"	6'-10	0.2
18"	9"	2'-3"	3'-10	3'-0"	6'-1"	2"	1'-5"	1'-9"	0'-11	5'-10	0.2	1'-3"	7'-7"	0.3
24"	10"	3'-8"	2'-6"	4'-0"	6'-2"	2"	1'-8"	1'-10	0'-11	7'-4"	0.2	1'-5"	8'-9"	0.3
30"	1'-0"	4'-6"	1'-8"	5'-0"	6'-2"	2"	1'-11	2'-1"	1'-1"	8'-10	0.3	1'-8"	10'-0	0.4
36"	1'-3"	5'-3"	2'-11	6'-0"	8'-2"	3"	2'-3"	2'-5"	1'-3"	10'-6	0.4	2'-0"	11'-4	0.6
42"	1'-10	5'-3"	2'-11	6'-6"	8'-2"	3"	2'-9"	2'-11	1'-6"	12'-0	0.7	2'-6"	12'-4	0.9
48"	2'-1"	6'-0"	2'-2"	7'-0"	8'-2"	4"	3'-4"	3'-3"	1'-8"	13'-8	1.0	3'-0"	13'-4	1.2

FLARED END SECTIONS - REINFORCEMENT

PIPE DIA.	QTY. & DIM. OF RODS	STEEL #'S	FABRIC
12"	(2) #3X4'-0" SIDE RODS	3.0	18" 2X8 - W2.1 X W1.7
15"	(2) #3X4'-0" SIDE RODS	3.0	18" 2X8 - W2.1 X W1.7
18"	(2) #3X4'-0" SIDE RODS	3.0	18" 2X8 - W2.1 X W1.7
24"	(2) #3X6'-0" SIDE RODS	4.5	24" 2X8 - W2.9 X W2.9
30"	(2) #4X6'-0" SIDE RODS	8.0	30" 2X8 - W4.0 X W2.9
36"	(2) #4X8'-0" SIDE RODS	10.7	42" 2X8 - W4.0 X W2.9
42"	(2) #4X8'-0" SIDE RODS	10.7	48" 2X8 - W4.5 X W2.9
48"	(2) #4X8'-0" SIDE RODS	10.7	48" 2X8 - W4.5 X W2.9
36" - 48"	(2) #4X6'-0" BACK RODS	8.0	N/A

STATE OF
NORTH CAROLINA
DEPT. OF TRANSPORTATION
DIVISION OF HIGHWAYS
RALEIGH, N.C.

ENGLISH STANDARD DRAWING FOR
REINFORCED CONCRETE
FLARED END SECTION
12" THRU 48" PIPE

STATE OF
NORTH CAROLINA
DEPT. OF TRANSPORTATION
DIVISION OF HIGHWAYS
RALEIGH, N.C.

ENGLISH STANDARD DRAWING FOR METHOD OF PIPE INSTALLATION

METHOD "A"

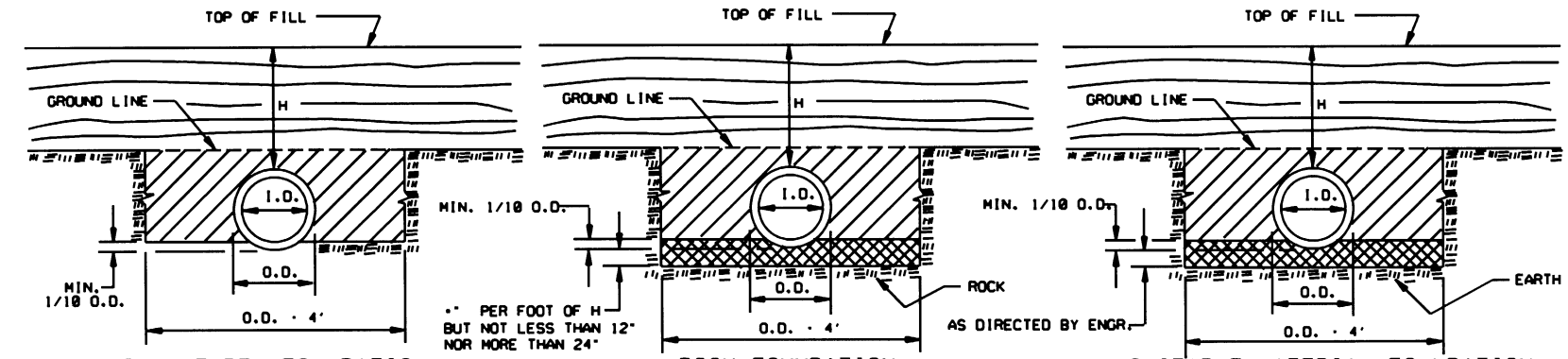

NORMAL EARTH FOUNDATION — ROCK FOUNDATION — UNSUITABLE MATERIAL FOUNDATION

PIPE IN TRENCH

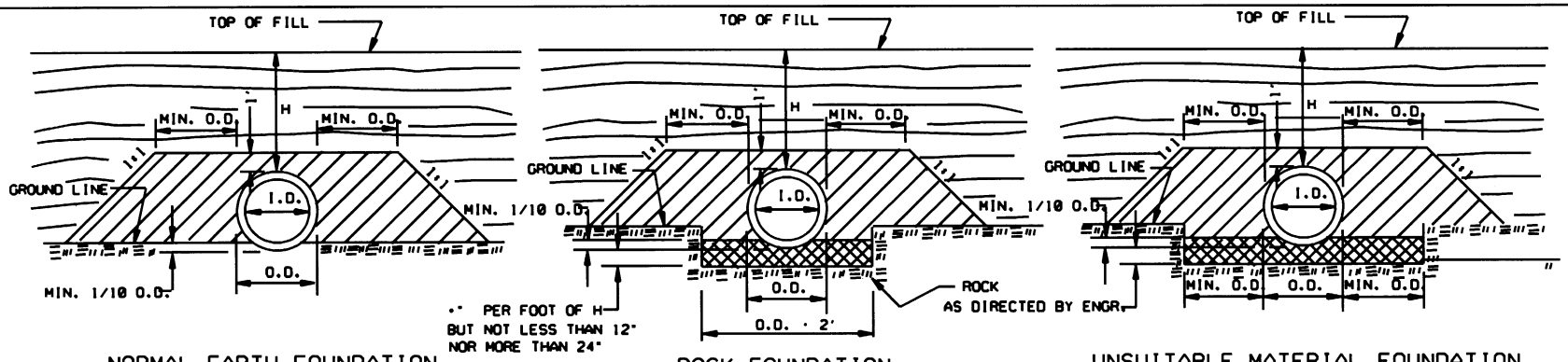

NORMAL EARTH FOUNDATION — ROCK FOUNDATION — UNSUITABLE MATERIAL FOUNDATION

PIPE ABOVE GROUND

GENERAL NOTES:

I.D. = THE MAXIMUM HORIZONTAL INSIDE DIMENSION.

O.D. = THE MAXIMUM HORIZONTAL OUTSIDE DIMENSION.

H = THE FILL HEIGHT MEASURED VERTICALLY AT ANY POINT ALONG THE PIPE FROM THE TOP OF THE PIPE TO THE TOP OF THE EMBANKMENT AT THAT POINT.

APPROVED SUITABLE LOCAL MATERIAL OR SELECT MATERIAL FOR FOUNDATION CONDITIONING AS DIRECTED BY THE ENGINEER.

APPROVED BACKFILL OR SELECT BACKFILL MATERIAL. WHEN "H" IS GREATER THAN 30', SELECT MATERIAL OF THE APPROPRIATE CLASS SHALL BE USED AS FOLLOWS:

UNDISTURBED EARTH MATERIAL

SELECT MATERIAL	"H"
CLASS IV	OVER 50 FEET
CLASS III	OVER 40 FEET THROUGH 50 FEET
CLASS II	OVER 30 FEET THROUGH 40 FEET

THE CLASS OF SELECT MATERIAL TO BE USED FOR AN INDIVIDUAL PIPE INSTALLATION WILL BE BASED ON THE MAXIMUM "H" WHICH OCCURS ALONG THE PIPE INSTALLATION. A HIGHER CLASS SELECT MATERIAL, NOT TO EXCEED CLASS IV, MAY BE USED IN LIEU OF CLASS II OR III.

SELECT MATERIAL WILL NOT BE REQUIRED AROUND THOSE PORTIONS OF AN INDIVIDUAL PIPE INSTALLATION LOCATED UNDER THAT PART OF THE FILL WHERE "H" IS 30 FEET OR LESS

HEAVY EQUIPMENT SHALL NOT OPERATE OVER ANY PIPE CULVERT UNTIL THE PIPE CULVERT HAS BEEN PROPERLY BACKFILLED AND COVERED WITH AT LEAST 3 FEET OF APPROVED MATERIAL.

SHEET 1 OF 1

300.01

STATE OF
NORTH CAROLINA
DEPT. OF TRANSPORTATION
DIVISION OF HIGHWAYS
RALEIGH, N.C.

ENGLISH STANDARD DRAWING FOR
METHOD OF PIPE INSTALLATION
METHOD "A"

SHEET 1 OF 1

300.01

STATE OF
NORTH CAROLINA
DEPT. OF TRANSPORTATION
DIVISION OF HIGHWAYS
RALEIGH, N.C.

ENGLISH STANDARD DRAWING FOR
PAVEMENT REPAIRS

D	X
12"	1.3
15"	1.6
18"	1.8
24"	2.4
30"	3.0
36"	3.5
42"	4.1
48"	4.7

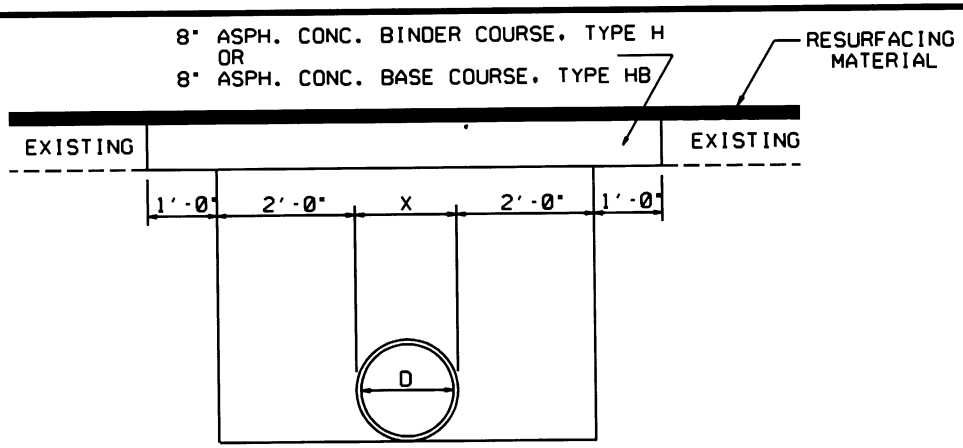

PAVEMENT REPAIRS ON ROADS TO BE RESURFACED
(PIPE IS PLACED UNDER EXISTING PAVEMENT)

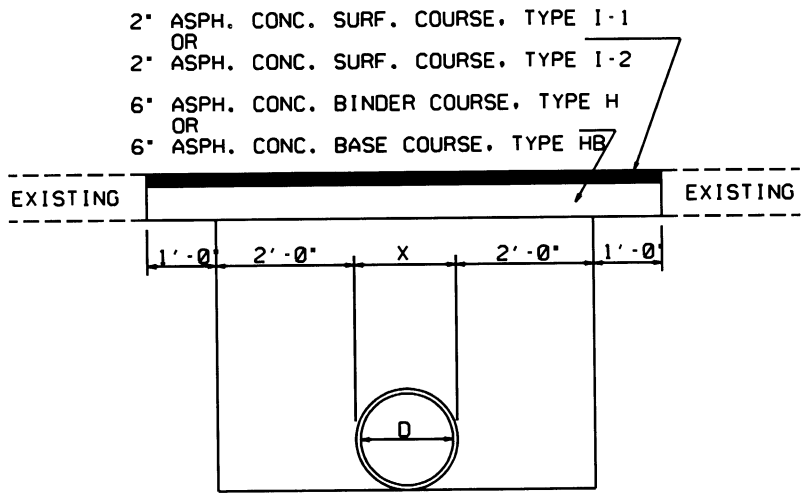

PAVEMENT REPAIRS ON ROADS NOT TO BE RESURFACED
(PIPE IS TO BE PLACED UNDER EXISTING PAVEMENT)

STATE OF
NORTH CAROLINA
DEPT. OF TRANSPORTATION
DIVISION OF HIGHWAYS
RALEIGH, N.C.

ENGLISH STANDARD DRAWING FOR
PAVEMENT REPAIRS

STATE OF
NORTH CAROLINA
DEPT. OF TRANSPORTATION
DIVISION OF HIGHWAYS
RALEIGH, N.C.

ENGLISH STANDARD DRAWING FOR
CONCRETE PAVEMENT JOINTS
CONSTRUCTION AND CONTRACTION JOINTS

SHEET 1 OF 2
700.01

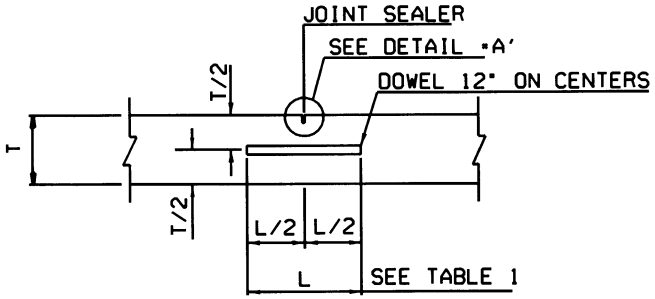

TRANSVERSE CONTRACTION JOINT

GENERAL NOTES:
- TRANSVERSE CONTRACTION JOINTS SHALL BE FORMED BY SAWING WITH APPROVED EQUIPMENT.
- TRANSVERSE CONTRACTION JOINTS SHALL BE SPACED AT INTERVALS OF 18', 19', 21' AND 22' OVER EACH 80' SEGMENT OF PAVEMENT.
- A DOWEL ASSEMBLY OR OTHER APPROVED DOWEL INSERTION TECHNIQUE SHALL BE USED IN ALL TRANSVERSE CONTRACTION JOINTS. DOWEL ASSEMBLIES ARE COVERED IN STD. DWG. 700.03.
- ALIGNMENT TOLERANCE FOR PLACEMENT OF DOWELS SHALL BE ." PER 1'.
- LOCATION TOLERANCE FOR DOWELS OR TIE BARS SHALL BE ".
- TOLERANCE IN DEPTH OF SAWING PAVEMENT JOINTS SHALL BE ".
- DOWEL BARS SHALL BE SMOOTH. TIE BARS SHALL BE DEFORMED.

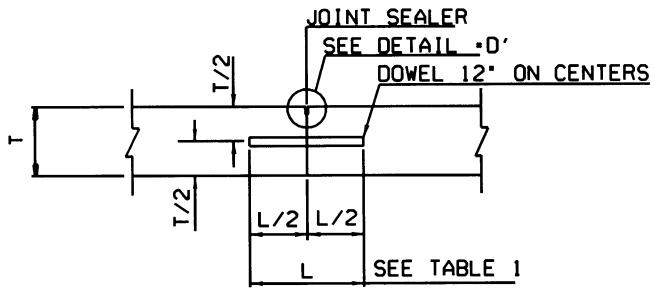

PLANNED TRANSVERSE CONSTRUCTION JOINT

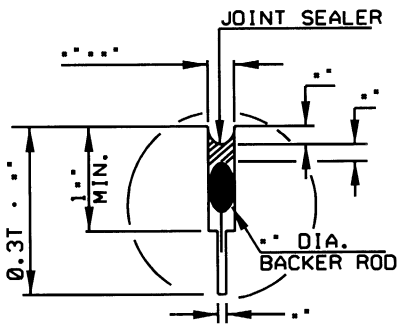

DETAIL "A"

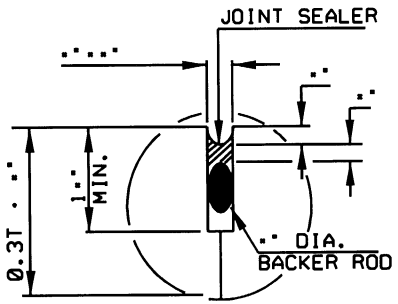

DETAIL "D"

TABLE I - DOWEL BARS		
SLAB THICKNESS	DOWEL BAR "D"	DOWEL LENGTH "L"
8" OR LESS	1"	14"
8." TO 9."	1."	16"
10" TO 10."	1."	18"
11"	1."	18"
12" AND ABOVE	1."	18"

STATE OF
NORTH CAROLINA
DEPT. OF TRANSPORTATION
DIVISION OF HIGHWAYS
RALEIGH, N.C.

ENGLISH STANDARD DRAWING FOR
CONCRETE PAVEMENT JOINTS
CONSTRUCTION AND CONTRACTION JOINTS

SHEET 1 OF 2
700.01

STATE OF
NORTH CAROLINA
DEPT. OF TRANSPORTATION
DIVISION OF HIGHWAYS
RALEIGH, N.C.

ENGLISH STANDARD DRAWING FOR
CONCRETE PAVEMENT JOINTS
CONSTRUCTION AND CONTRACTION JOINTS

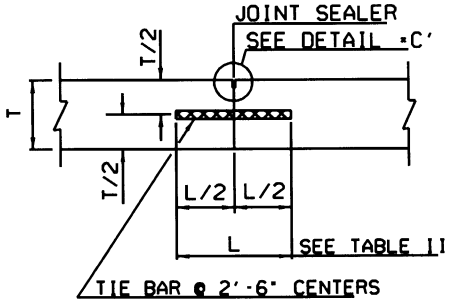

LONGITUDINAL CONSTRUCTION JOINT

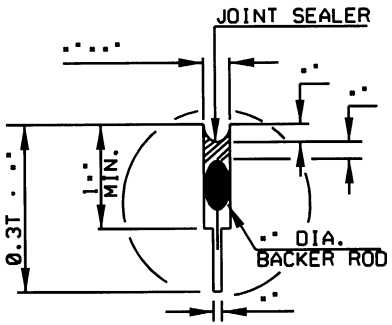

DETAIL "B"

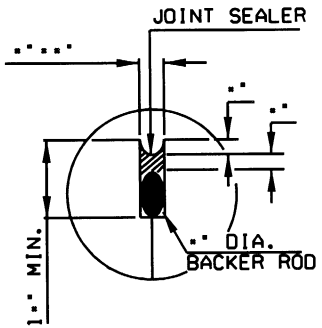

DETAIL "C"

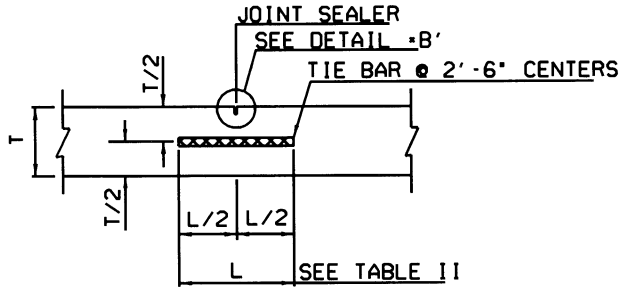

LONGITUDINAL JOINT

TABLE II - TIE BARS		
SLAB THICKNESS	TIE BAR DIA. "D"	TIE BAR LENGTH "L"
8" OR LESS	"	30"
9" OR ABOVE	"	30"

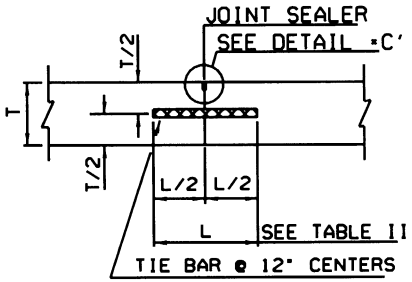

EMERGENCY TRANSVERSE CONSTRUCTION JOINT

GENERAL NOTES:
- TRANSVERSE CONSTRUCTION JOINTS SHALL BE CONSTRUCTED AT THE END OF EACH DAY'S OPERATION (PLANNED JOINT) OR WHEN THE PLACING OF CONCRETE IS SUSPENDED FOR MORE THAN 30 MINUTES (EMERGENCY JOINT).
- AN APPROVED HEADER SHALL BE USED AT EMERGENCY JOINTS AND SHALL BE DESIGNED TO PERMIT THE PLACEMENT OF AND CORRECTLY HOLD IN PLACE TIE BARS (STD. DWG. 700.04).
- PLANNED TRANSVERSE CONSTRUCTION JOINTS SHALL BE LOCATED AT THE SPACING REQUIRED FOR CONTRACTION JOINTS. AN APPROVED METHOD OF INSTALLING DOWELS SHALL BE USED IN ALL PLANNED TRANSVERSE CONSTRUCTION JOINTS.
- EMERGENCY TRANSVERSE CONSTRUCTION JOINTS SHALL NOT BE LOCATED LESS THAN 3' FROM ANY CONTRACTION JOINT OR PLANNED CONSTRUCTION JOINT.
- TIE BARS IN LONGITUDINAL JOINTS SHOULD NOT BE PLACED WITHIN 1'-4" OF A TRANSVERSE JOINT.

STATE OF
NORTH CAROLINA
DEPT. OF TRANSPORTATION
DIVISION OF HIGHWAYS
RALEIGH, N.C.

ENGLISH STANDARD DRAWING FOR
CONCRETE PAVEMENT JOINTS
CONSTRUCTION AND CONTRACTION JOINTS

STATE OF
NORTH CAROLINA
DEPT. OF TRANSPORTATION
DIVISION OF HIGHWAYS
RALEIGH, N.C.

ENGLISH STANDARD DRAWING FOR
EXPANSION JOINT LAYOUT
FOR RIGID DOWELED PAVEMENT AT BRIDGES

SHEET 1 OF 1
700.02

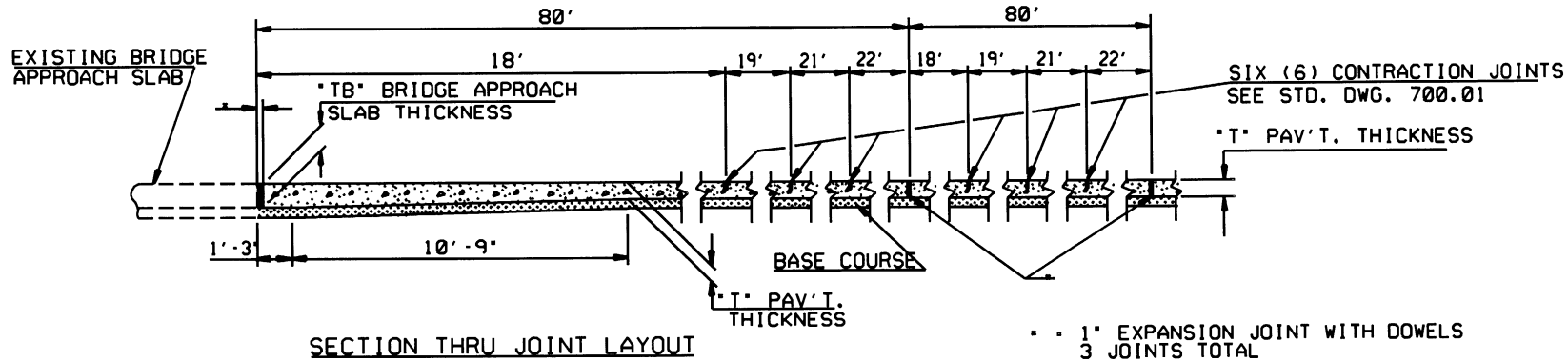

SECTION THRU JOINT LAYOUT

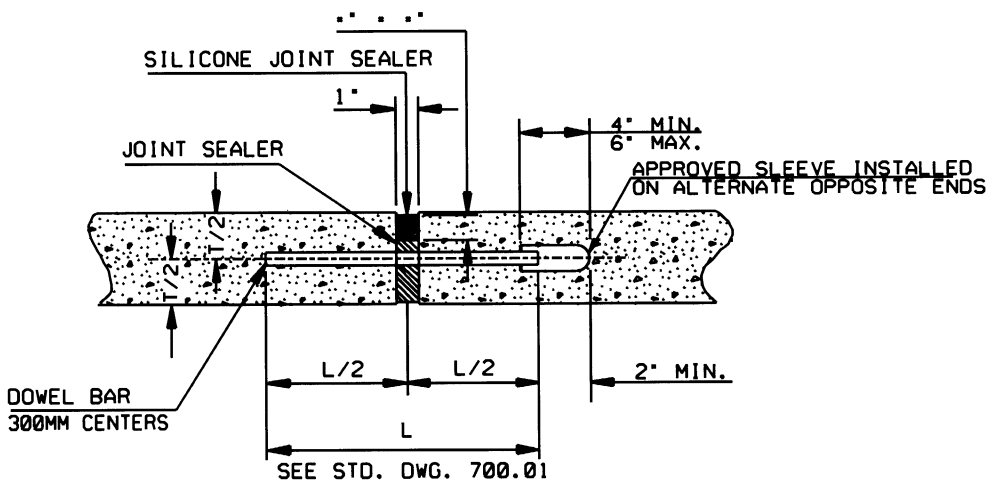

EXPANSION JOINT DETAIL

GENERAL NOTES:
- AN APPROVED TYPE OF DOWEL ASSEMBLY SHALL BE USED IN ALL TRANSVERSE EXPANSION JOINTS. THE DOWEL ASSEMBLY SHALL BE OF RIGID CONSTRUCTION, CAPABLE OF HOLDING THE DOWEL BARS IN PROPER POSITION DURING PLACEMENT OF THE CONCRETE AND SHALL BE OF SUCH DESIGN AS TO PERMIT UNRESTRICTED MOVEMENT OF THE PAVEMENT SLAB. SEE STD. DWG. 700.03 FOR DOWEL ASSEMBLY.
- EXPANSION JOINT ADJACENT TO THE APPROACH SLAB SHALL EXTEND ACROSS THE ENTIRE PAVEMENT WIDTH INCLUDING THE PAVED SHOULDERS.
- SEE STD. DWG. 700.01 FOR TOLERANCE AND BAR SIZE.

STATE OF
NORTH CAROLINA
DEPT. OF TRANSPORTATION
DIVISION OF HIGHWAYS
RALEIGH, N.C.

ENGLISH STANDARD DRAWING FOR
EXPANSION JOINT LAYOUT
FOR RIGID DOWELED PAVEMENT AT BRIDGES

SHEET 1 OF 1
700.02

STATE OF
NORTH CAROLINA
DEPT. OF TRANSPORTATION
DIVISION OF HIGHWAYS
RALEIGH, N.C.

ENGLISH STANDARD DRAWING FOR

DOWEL ASSEMBLY

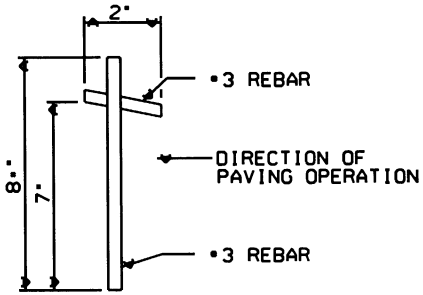

STAKING PIN
(MIN. 8 PER BASKET)

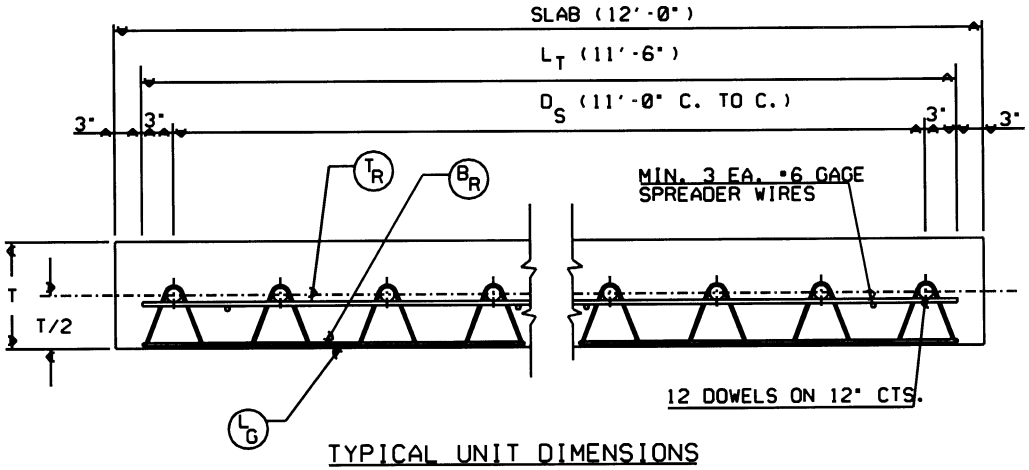

TYPICAL UNIT DIMENSIONS

"V" LEG ONLY			
SLAB THICKNESS	WIRE GAGE		
	T_R	B_R	L_G
8" OR LESS	2	2	2
8½" - 10"	0	2	2
10½" & ABOVE	2/0'S	2/0'S	2/0'S

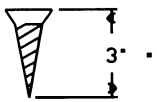

GRABBER SCREW (PHILLIPS)
(MINIMUM 8 PER BASKET)

GENERAL NOTES:
- THE DOWEL ASSEMBLY SHALL BE OF RIGID CONSTRUCTION CAPABLE OF HOLDING THE DOWEL BAR IN PROPER POSITION DURING PLACMENT OF CONCRETE AND SHALL BE OF SUCH DESIGN AS TO PERMIT UNRESTRICTED MOVEMENT OF THE SLAB. THE DOWEL ASSEMBLY SHALL BE APPROVED BY THE ENGINEER PRIOR TO USE.
- ALL DOWEL ASSEMBLIES SHALL BE MANUFACTURED WITH DOWELS ALTERNATELY WELDED TO FRAME MEMBERS.
- THE GRABBER SCREW WITH MASONRY TIE SHALL BE USED ON ASPHALT BASE.
- THE STAKING PIN SHALL BE USED ON THE PERMEABLE ASPHALT BASE COURSE.
- EPOXY COATED DOWELS SHALL BE SAW CUT WITH ONE END BUFFED ¼" X CIRCUMFERENCE TO FACILITATE WELDING OF THE DOWEL TO THE ASSEMBLY FRAME. TOUCH UP OF THE BUFFED AREA WILL NOT BE REQUIRED.
- FRAME MEMBERS SHALL BE RESISTANCE WELDED; DOWELS AND SPREADER WIRES MAY BE ARC WELDED. WELD IN ACCORDANCE WITH AWS WELDING CODE.
- THE DOWEL ASSEMBLIES SHALL BE FULLY DIPPED TO ASSURE A COMPLETE COATING OF WAX.
- SEE STD. DWG. 700.01 FOR DOWEL BAR SIZES.

STATE OF
NORTH CAROLINA
DEPT. OF TRANSPORTATION
DIVISION OF HIGHWAYS
RALEIGH, N.C.

ENGLISH STANDARD DRAWING FOR
DOWEL ASSEMBLY

SHEET 1 OF 2
700.03

STATE OF
NORTH CAROLINA
DEPT. OF TRANSPORTATION
DIVISION OF HIGHWAYS
RALEIGH, N.C.

ENGLISH STANDARD DRAWING FOR
CONCRETE PAVEMENT HEADER BOARD

SHEET 1 OF 1
700.04

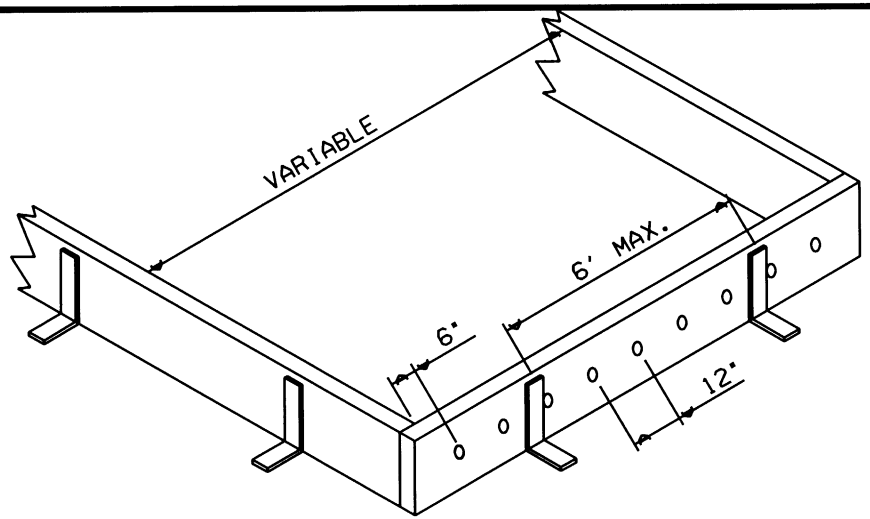

ISOMETRIC VIEW

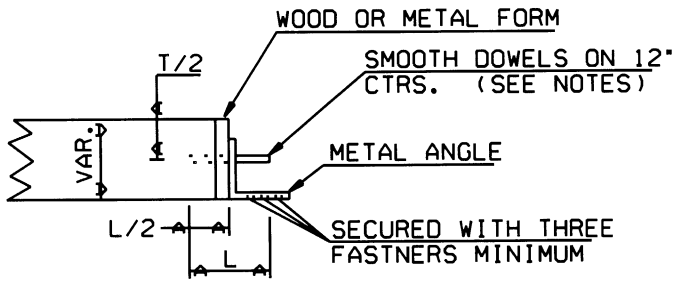

TRANSVERSE HEADER SECTION

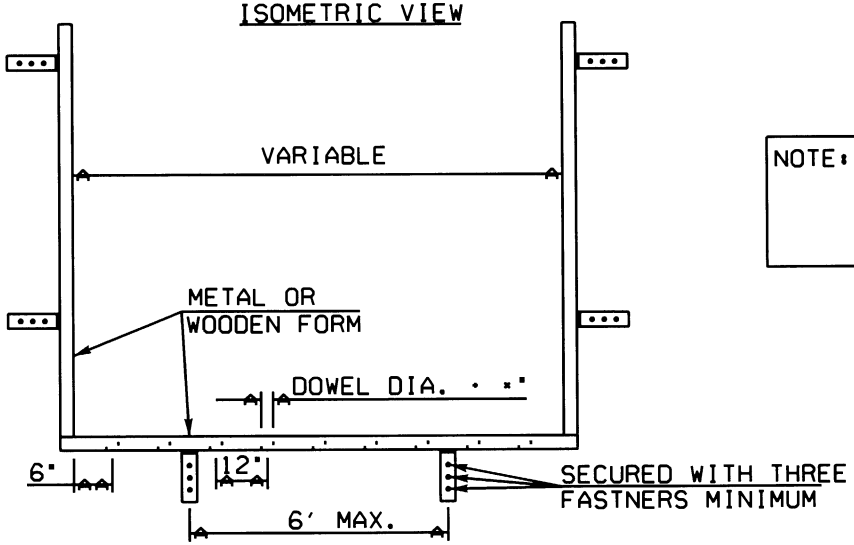

PLAN

NOTE: UPON COMPLETION OF FINAL SLAB, DOWEL BARS ARE TO BE REMOVED AT SUCH TIME AS CONCRETE HAS CURED ENOUGH TO LEAVE A CAVITY FOR RESETTING AT A LATER DATE.

WOOD OR METAL FORM SHALL BE OF SUFFICIENT RIGIDITY TO ADEQUATELY SUPPORT THE EDGES OF THE SLAB.

STATE OF
NORTH CAROLINA
DEPT. OF TRANSPORTATION
DIVISION OF HIGHWAYS
RALEIGH, N.C.

ENGLISH STANDARD DRAWING FOR
CONCRETE PAVEMENT HEADER BOARD

SHEET 1 OF 1
700.04

STATE OF
NORTH CAROLINA
DEPT. OF TRANSPORTATION
DIVISION OF HIGHWAYS
RALEIGH, N.C.

ENGLISH STANDARD DRAWING FOR
CONCRETE PAVEMENT
STATION MARKING

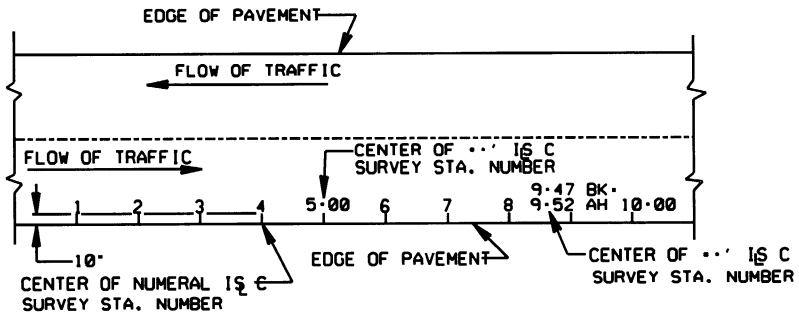

TWO LANE PAVEMENT

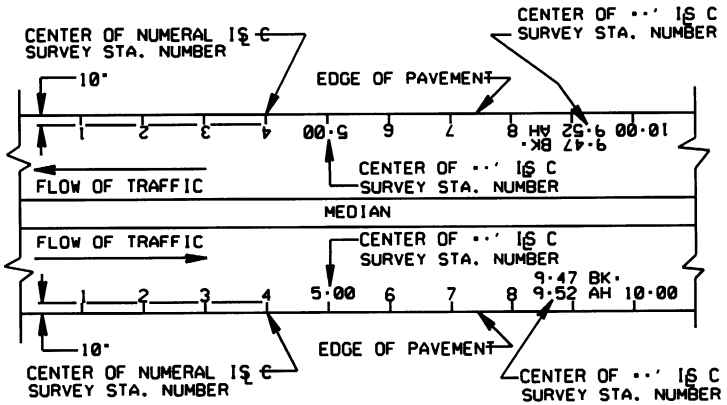

DIVIDED ROADWAYS (4-6 LANES)

GENERAL NOTES:

THE MARKING SHALL BE ACCOMPLISHED BY THE USE OF METAL DIES HAVING A BEVELED FACE PRESSED INTO THE CONCRETE. THE NUMBERS SHALL BE BETWEEN 4" AND 6" HIGH.

STATIONS SHALL BE MARKED 1,2,3 ETC. EXCEPT AT EACH MULTIPLE OF FIVE STATIONS, WHICH SHALL BE SHOWN 5·00, 10·00, 15·00 ETC. EQUATIONS SHALL BE SHOWN IN FULL. WHERE AN EQUATION FALLS WITHIN 50 FEET OF A STATION MARKING, THE EQUATION SHALL BE SHOWN AND STATION MARKING ELIMINATED.

THE PAVEMENT SHALL BE MARKED BEFORE THE CONCRETE HAS TAKEN ITS INITIAL SET, AND ALL DISPLACED AGGREGATE REMOVED SO THAT THE SURFACE OF THE PAVEMENT IS LEFT IN A SMOOTH CONDITION WITH LETTERS FULLY AND NEATLY FORMED.

TWO LANE PAVEMENTS

STATION NUMBERS AND EQUATIONS SHALL BE MARKED ALONG THE OUTSIDE EDGE OF THE PAVEMENT OF THE RIGHT LANE IN SUCH A POSITION AS TO BE READ RIGHT SIDE UP FROM THE DRIVERS SEAT OF A CAR TRAVELING ON THE SHOULDER. WHEN TWO LANES OF A FUTURE MULTI-LANE SECTION ARE BEING PAVED, STATION MARKING SHALL BE POSITIONED IN ACCORDANCE WITH THE REQUIREMENTS FOR MULTI-LANE PAVEMENT.

DIVIDED ROADWAYS (4-6 LANES)

STATION NUMBERS AND EQUATIONS SHALL BE MARKED ALONG THE OUTSIDE EDGE OF BOTH LANES IN SUCH A POSITION AS TO BE READ RIGHT SIDE UP FROM THE DRIVERS SEAT OF A CAR TRAVELING ON THE SHOULDER OF EACH TWO LANE COMPONENT.

RAMPS

STATION NUMBERS AND EQUATIONS SHALL BE MARKED ON THE RIGHT SIDE OF THE PAVEMENT EDGE IN THE DIRECTION OF THE FLOW OF TRAFFIC SUCH THAT THEY CAN BE READ RIGHT SIDE UP FROM THE DRIVERS SEAT OF A CAR TRAVELING ON THE RIGHT SHOULDER.

SHEET 1 OF 1
710.01

STATE OF
NORTH CAROLINA
DEPT. OF TRANSPORTATION
DIVISION OF HIGHWAYS
RALEIGH, N.C.

ENGLISH STANDARD DRAWING FOR
CONCRETE PAVEMENT
STATION MARKING

SHEET 1 OF 1
710.01

STATE OF
NORTH CAROLINA
DEPT. OF TRANSPORTATION
DIVISION OF HIGHWAYS
RALEIGH, N.C.

ENGLISH STANDARD DRAWING FOR
CONCRETE BASE PAD
FOR DRAINAGE STRUCTURES

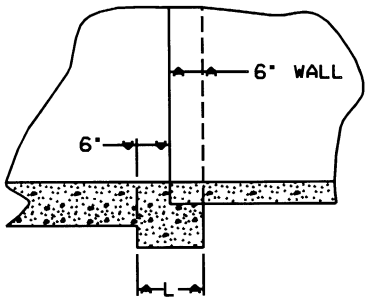

PART SECTION
6" WALL

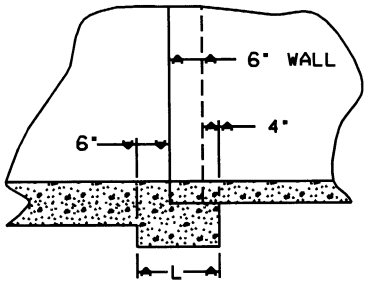

PART SECTION
6" WALL WITH 4" LIP

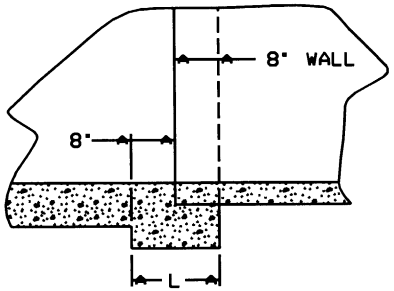

PART SECTION
8" WALL

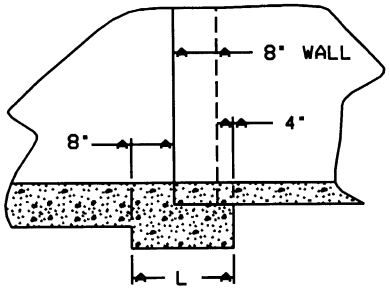

PART SECTION
8" WALL WITH 4" LIP

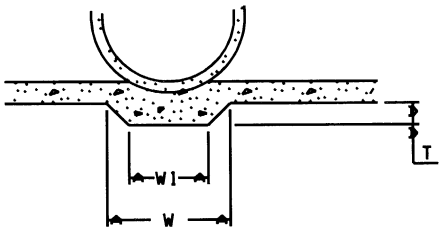

PART SECTION
OF END ELEVATION

TABLES OF QUANTITIES FOR PIPE SET IN PAD

PIPE D	"W" DIM	"W1" DIM	"T" DIM	C.Y. QUANTITIES WHEN L IS 12"	16"	20"
12"	1'-1"	0'-7"	0'-2"	0.005	0.007	0.008
15"	1'-3"	0'-9"	0'-2"	0.006	0.008	0.010
18"	1'-5"	0'-10"	0'-2"	0.007	0.010	0.012
24"	1'-8"	1'-0"	0'-3"	0.011	0.014	0.018
30"	2'-0"	1'-2"	0'-3"	0.014	0.018	0.023
36"	2'-3"	1'-5"	0'-4"	0.017	0.023	0.025
42"	2'-7"	1'-7"	0'-5"	0.025	0.030	0.038
48"	2'-10"	1'-8"	0'-5"	0.028	0.038	0.047
54"	3'-2"	1'-10"	0'-6"	0.035	0.047	0.058
60"	3'-5"	2'-0"	0'-6"	0.042	0.056	0.071
66"	3'-9"	2'-2"	0'-7"	0.050	0.067	0.084
72"	4'-0"	2'-3"	0'-7"	0.059	0.078	0.098

GENERAL NOTES:

THIS STANDARD SHALL BE USED WITH ALL DRAINAGE STRUCTURES USING REINFORCED CONCRETE PIPE SET IN BASE SLAB.

SHEET 1 OF 1
840.00

STATE OF
NORTH CAROLINA
DEPT. OF TRANSPORTATION
DIVISION OF HIGHWAYS
RALEIGH, N.C.

ENGLISH STANDARD DRAWING FOR
CONCRETE BASE PAD
FOR DRAINAGE STRUCTURES

SHEET 1 OF 1
840.00

STATE OF
NORTH CAROLINA
DEPT. OF TRANSPORTATION
DIVISION OF HIGHWAYS
RALEIGH, N.C.

ENGLISH STANDARD DRAWING FOR BRICK CATCH BASIN

12" THRU 54" PIPE

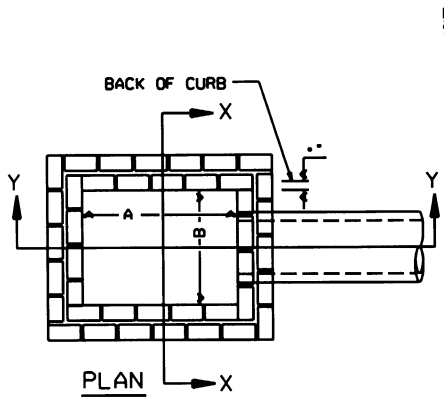

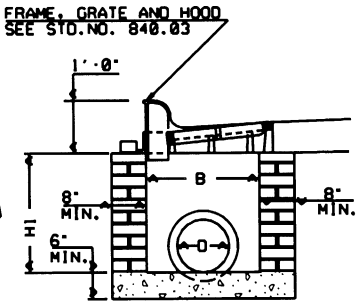

SECTION X-X

GENERAL NOTES:

MORTAR JOINTS ·" TO ·" THICK.

CLASS "B" CONCRETE TO BE USED THROUGHOUT.

THE POURING OF FLOOR SLAB TO BE ACCOMPLISHED BY FORMING.

DEDUCT FOR PIPE(S) FROM TOTAL CU. YDS. OF BRICK MASONRY.

ALL CATCH BASINS OVER 3'-6" IN DEPTH TO BE PROVIDED WITH STEPS 1'-2" ON CENTER. STEPS SHALL BE IN ACCORDANCE WITH STD. NO. 840.66.

USE TYPE "E", "F" AND "G" GRATES UNLESS OTHERWISE INDICATED.

JUMBO BRICK WILL BE PERMITTED. CONCRETE BRICK OR 4" SOLID CONCRETE BLOCKS MAY BE USED IN LIEU OF CLAY BRICK.

IF REINFORCED CONCRETE PIPE IS SET IN BASE SLAB OF BOX, ADD TO BASE AS SHOWN ON STD. NO. 840.00.

FOR 8'-0" IN HEIGHT OR LESS, USE 8" WALL. OVER 8'-0" IN HEIGHT, USE 12" WALL TO 6'-0" FROM TOP OF WALL AND 8" WALL FOR THE REMAINING 6'-0". QUANTITES TO BE ADJUSTED ACCORDINGLY.

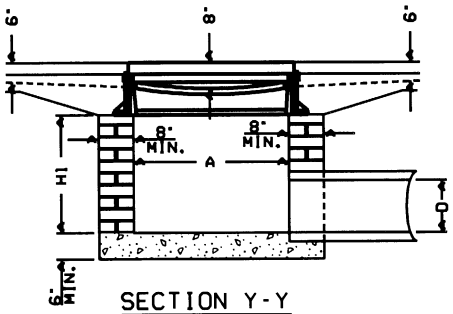

SECTION Y-Y

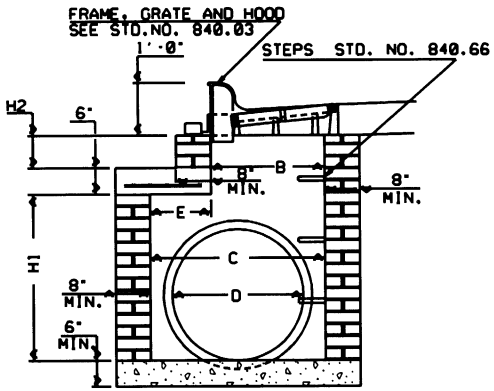

END ELEVATION
WHERE 30" TO 36" PIPE IS USED

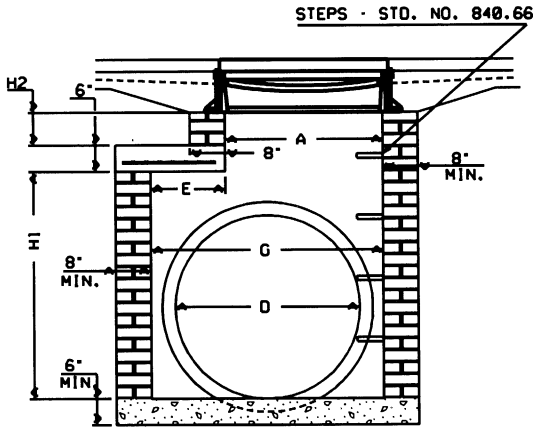

SIDE ELEVATION
SECTION M-M
WHERE 42" TO 54" PIPE IS USED

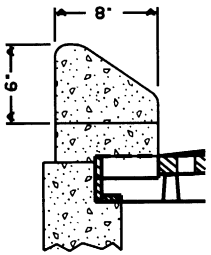

VIEW WHEN 8" X 6" CURB
IS USED IN PLACE OF HOOD

SECTION J-J

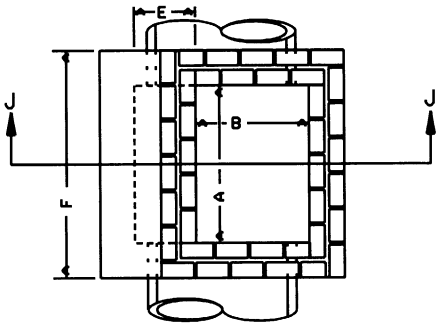

PLAN

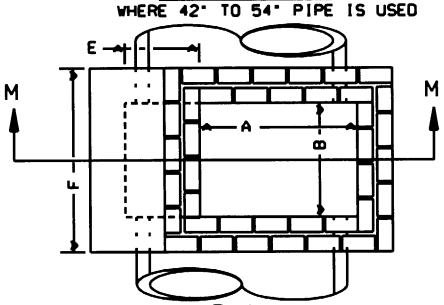

PLAN

SHEET 1 OF 2
840.01

STATE OF
NORTH CAROLINA
DEPT. OF TRANSPORTATION
DIVISION OF HIGHWAYS
RALEIGH, N.C.

ENGLISH STANDARD DRAWING FOR
BRICK CATCH BASIN
12" THRU 54" PIPE

SHEET 1 OF 2
840.01

d:\idiq\composi.dgn May. 20, 1999 15:45:33

STATE OF
NORTH CAROLINA
DEPT. OF TRANSPORTATION
DIVISION OF HIGHWAYS
RALEIGH, N.C.

ENGLISH STANDARD DRAWING FOR
FRAME, GRATES, AND HOOD
FOR USE ON STANDARD CATCH BASIN

SHEET 1 OF 3
840.03

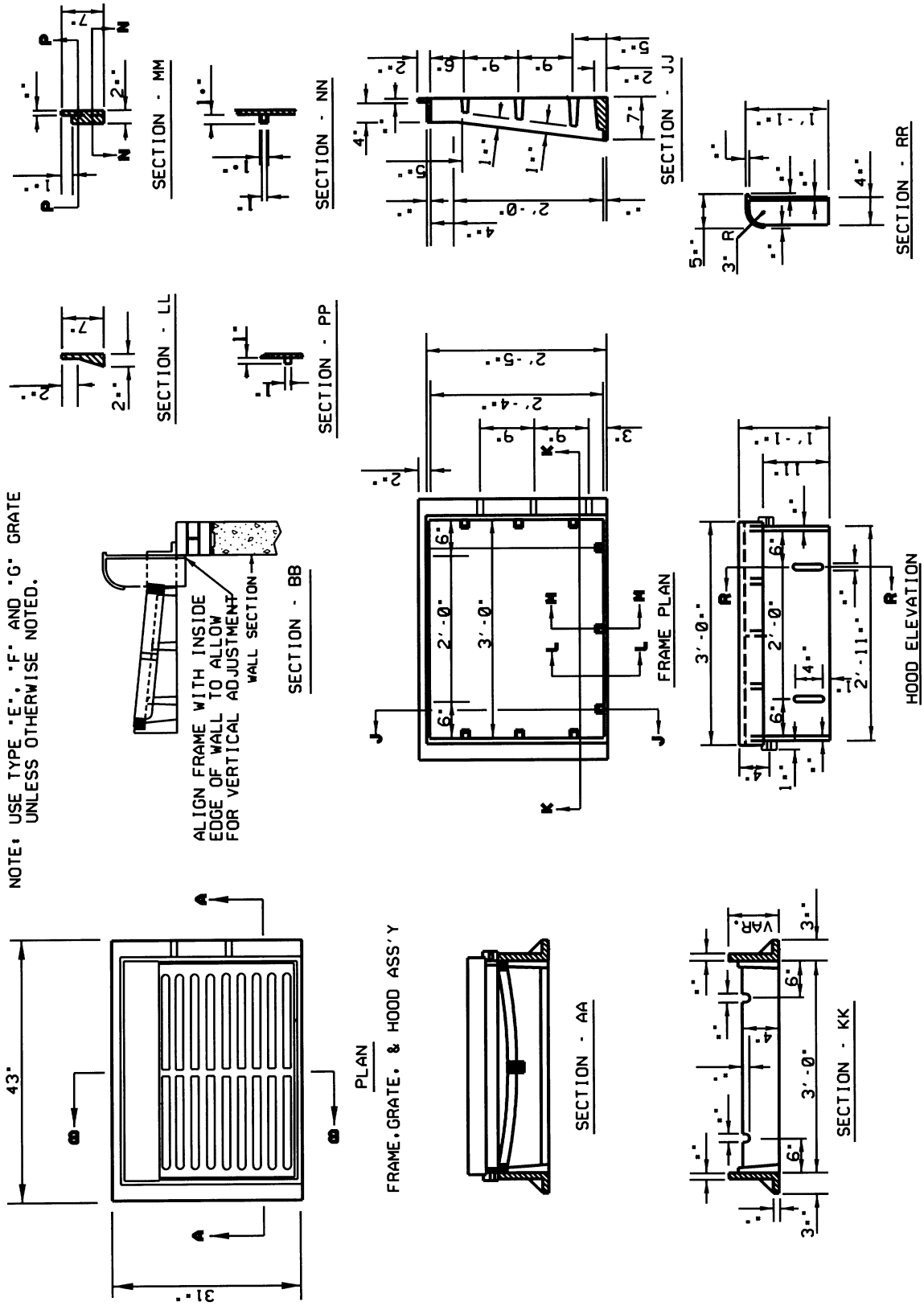

STATE OF
NORTH CAROLINA
DEPT. OF TRANSPORTATION
DIVISION OF HIGHWAYS
RALEIGH, N.C.

ENGLISH STANDARD DRAWING FOR
FRAME, GRATES, AND HOOD
FOR USE ON STANDARD CATCH BASIN

SHEET 1 OF 3
840.03

d:\diq\composi.dgn May. 20, 1999 15:46:08

STATE OF
NORTH CAROLINA
DEPT. OF TRANSPORTATION
DIVISION OF HIGHWAYS
RALEIGH, N.C.

ENGLISH STANDARD DRAWING FOR
FRAME, GRATES, AND HOOD
FOR USE ON STANDARD CATCH BASIN

SHEET 1 OF 3
840.03

NOTE: USE TYPE "E", "F" AND "G" GRATE UNLESS OTHERWISE NOTED.

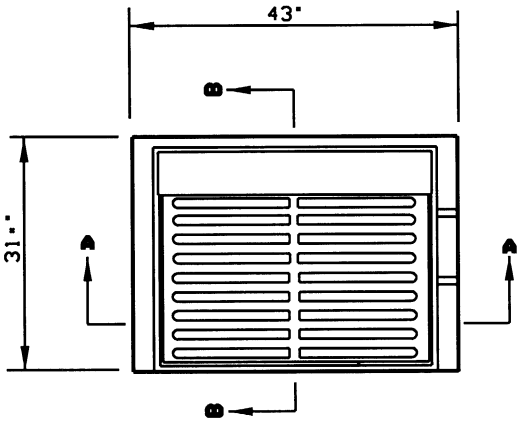

PLAN

FRAME, GRATE, & HOOD ASS'Y

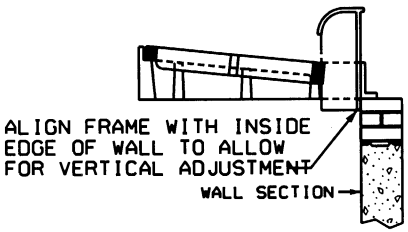

SECTION - BB

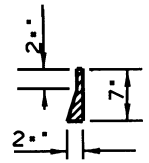

SECTION - LL

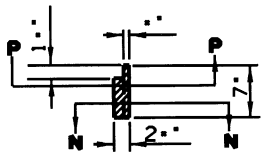

SECTION - MM

SECTION - PP

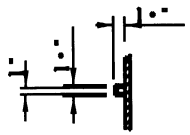

SECTION - NN

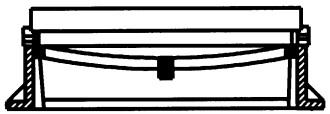

SECTION - AA

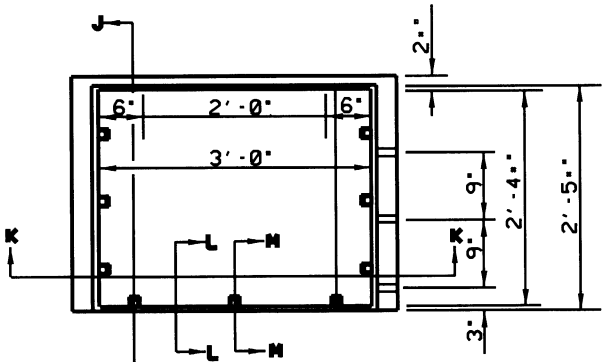

FRAME PLAN

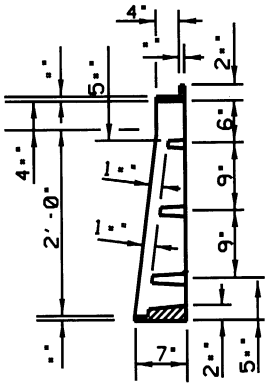

SECTION - JJ

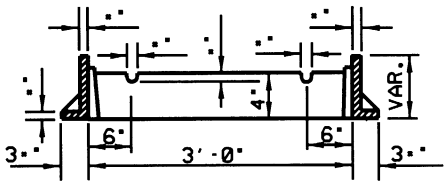

SECTION - KK

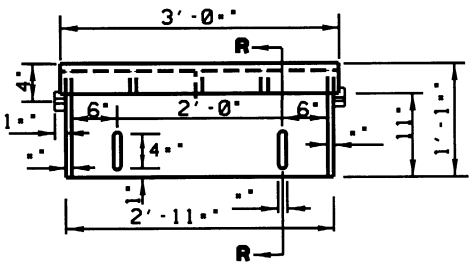

HOOD ELEVATION

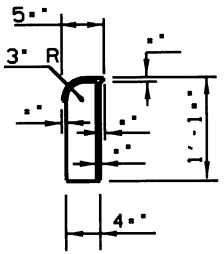

SECTION - RR

STATE OF
NORTH CAROLINA
DEPT. OF TRANSPORTATIO
DIVISION OF HIGHWAYS
RALEIGH, N.C.

ENGLISH STANDARD DRAWING FOR
FRAME, GRATES, AND HOOD
FOR USE ON STANDARD CATCH BASIN

SHEET 1 OF 3
840.03

d:\idiq\composi.dgn May. 20, 1999 15:46:12

STATE OF
NORTH CAROLINA
DEPT. OF TRANSPORTATION
DIVISION OF HIGHWAYS
RALEIGH, N.C.

ENGLISH STANDARD DRAWING FOR BRICK CATCH BASIN

12" THRU 54" PIPE

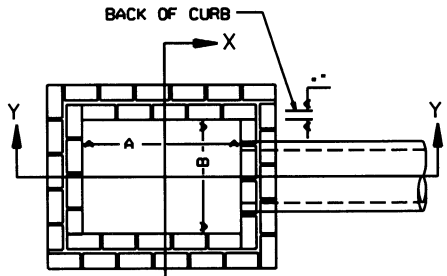

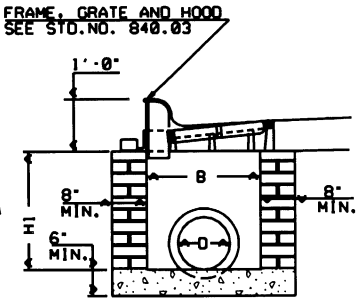

SECTION X-X

GENERAL NOTES:

MORTAR JOINTS ·" TO ·" THICK.

CLASS "B" CONCRETE TO BE USED THROUGHOUT.

THE POURING OF FLOOR SLAB TO BE ACCOMPLISHED BY FORMING.

DEDUCT FOR PIPE(S) FROM TOTAL CU. YDS. OF BRICK MASONRY.

ALL CATCH BASINS OVER 3'-6" IN DEPTH TO BE PROVIDED WITH STEPS 1'-2" ON CENTER. STEPS SHALL BE IN ACCORDANCE WITH STD. NO. 840.66.

USE TYPE "E", "F" AND "G" GRATES UNLESS OTHERWISE INDICATED.

JUMBO BRICK WILL BE PERMITTED. CONCRETE BRICK OR 4" SOLID CONCRETE BLOCKS MAY BE USED IN LIEU OF CLAY BRICK.

IF REINFORCED CONCRETE PIPE IS SET IN BASE SLAB OF BOX, ADD TO BASE AS SHOWN ON STD. NO. 840.00.

FOR 8'-0" IN HEIGHT OR LESS, USE 8" WALL. OVER 8'-0" IN HEIGHT, USE 12" WALL TO 6'-0" FROM TOP OF WALL AND 8" WALL FOR THE REMAINING 6'-0". QUANTITES TO BE ADJUSTED ACCORDINGLY.

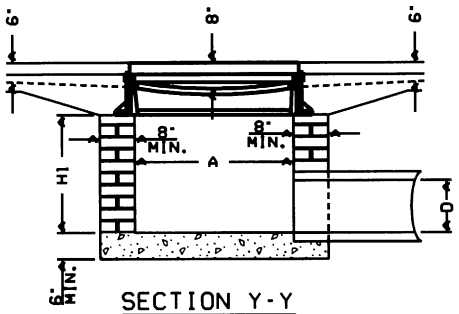

SECTION Y-Y

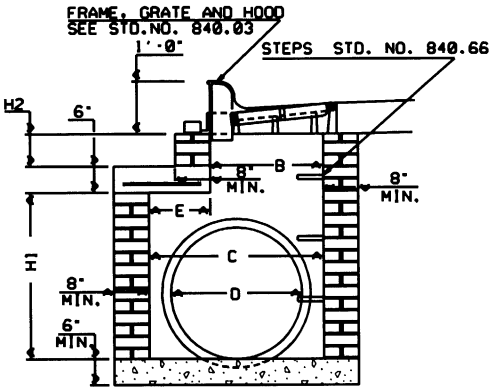

END ELEVATION
WHERE 30" TO 36" PIPE IS USED
SECTION J-J

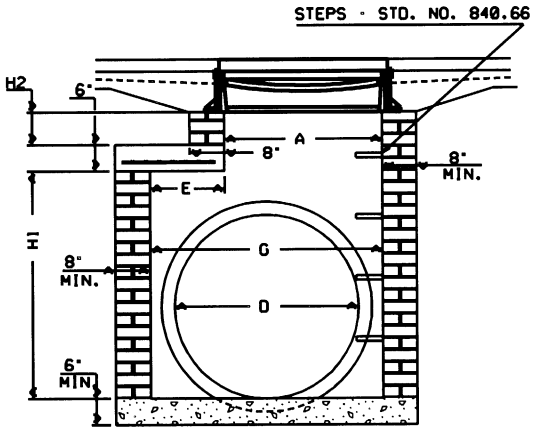

SIDE ELEVATION
SECTION M-M
WHERE 42" TO 54" PIPE IS USED

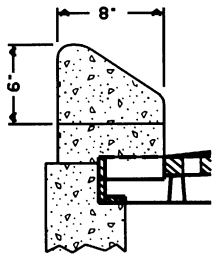

VIEW WHEN 8" X 6" CURB
IS USED IN PLACE OF HOOD

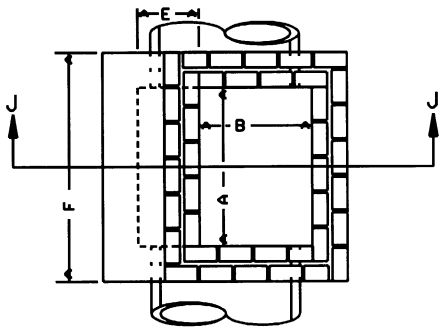

PLAN

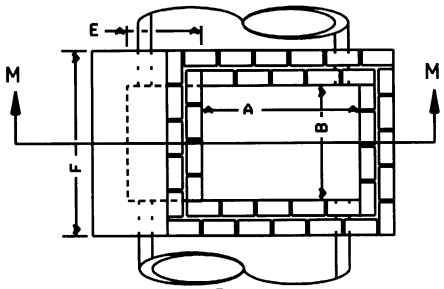

PLAN

SHEET 1 OF 2
840.01

STATE OF
NORTH CAROLINA
DEPT. OF TRANSPORTATION
DIVISION OF HIGHWAYS
RALEIGH, N.C.

ENGLISH STANDARD DRAWING FOR
BRICK CATCH BASIN
12" THRU 54" PIPE

SHEET 1 OF 2
840.01

STATE OF
NORTH CAROLINA
DEPT. OF TRANSPORTATION
DIVISION OF HIGHWAYS
RALEIGH, N.C.

ENGLISH STANDARD DRAWING FOR
BRICK CATCH BASIN
12" THRU 54" PIPE

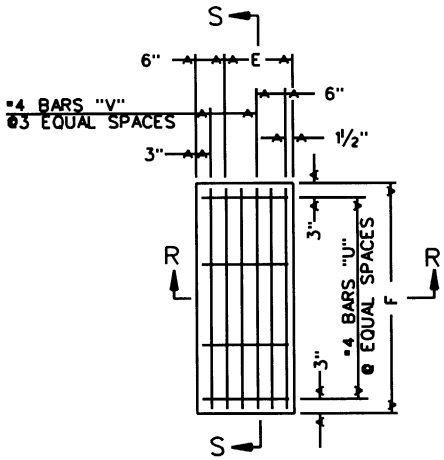

PLAN OF TOP SLAB

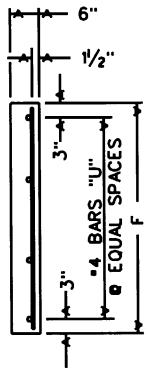

SECTION S-S

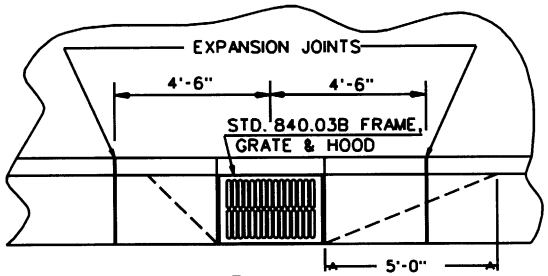

PLAN

CURB AND GUTTER WITH CATCH BASIN ON STEEP GRADES

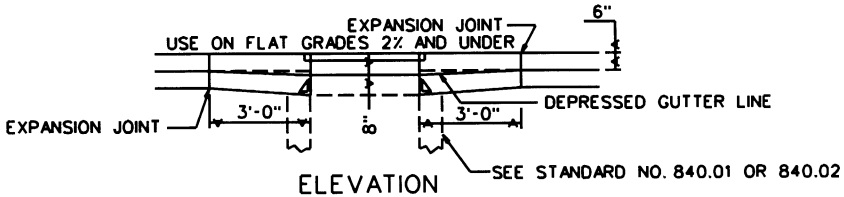

ELEVATION

NORMAL CURB AND GUTTER ON LIGHT GRADES

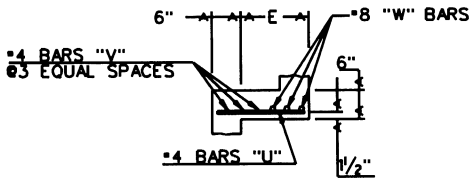

SECTION R-R

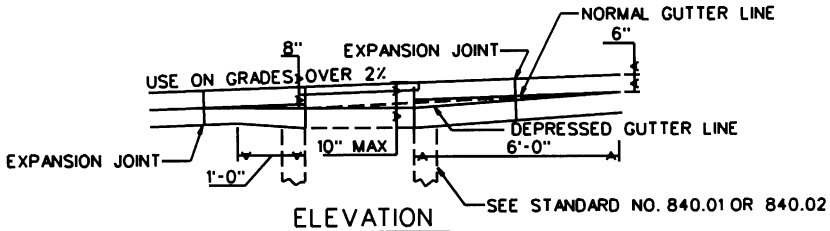

ELEVATION

NORMAL CURB AND GUTTER ON STEEP GRADES

MINIMUM DIMENSIONS AND QUANTITIES FOR BRICK CATCH BASIN

DIMENSIONS OF BOX AND PIPE							COVER DIMENSION		BARS-U		BARS-V		BARS-W		TOTAL LBS.	CU. YDS. CONC. IN BOX			BRICK MASONRY		H1 C.Y./FT.HT.	ADD TO FT.HT.	DEDUCTIONS ONE PIPE	
PIPE	SPAN	WIDTH	WIDTH	SPAN	HEIGHT	HEIGHT										TOP SLAB	FLOOR	TOTAL CONC.	H1 CU. YDS.	WALL/FT.HT.			C.M.	R.C.
D	A	B	C	G	MIN. H1	H2	E	F	NO.	LENGTH	NO.	LENGTH	NO.	LENGTH										
12"	3'-0"	2'-2"	--	--	2'-4"	--	--	--	--	--	--	--	--	--	--	--	0.281	0.281	0.748	0.321 ABOVE MIN. H1	0.321	--	0.020	0.032
15"	3'-0"	2'-2"			2'-6"												0.281	0.281	0.802		0.321	--	0.031	0.047
18"	3'-0"	2'-2"			2'-10"												0.281	0.281	0.909		0.321	--	0.044	0.065
24"	3'-0"	2'-2"			3'-2"												0.281	0.281	1.070		0.321	--	0.078	0.113
30"	3'-0"	2'-2"	3'-4"		3'-4"	VAR.	1'-10"	4'-4"	4	1'-6"	3	4'-1"	3	4'-1"	45	0.147	0.374	0.521	1.305	0.321 H2	0.378	0.108	0.122	0.170
36"	3'-0"	2'-2"	3'-10"		3'-8"	VAR.	2'-4"	4'-4"	4	2'-0"	4	4'-1"	3	4'-1"	49	0.187	0.415	0.602	1.586		0.403	0.108	0.176	0.238
42"	3'-0"	2'-2"		4'-5"	4'-4"	VAR.	2'-1"	3'-6"	4	1'-9"	3	3'-3"	3	3'-3"	38	0.135	0.373	0.508	1.811		0.391	0.117	0.240	0.323
48"	3'-0"	2'-2"		5'-0"	4'-10"	VAR.	2'-8"	3'-6"	4	2'-6"	4	3'-3"	3	3'-3"	40	0.173	0.410	0.583	2.147		0.420	0.117	0.313	0.422
54"	3'-0"	2'-2"		5'-7"	5'-4"	VAR.	3'-3"	3'-6"	4	3'-0"	6	3'-3"	3	3'-3"	48	0.211	0.448	0.659	2.511		0.449	0.117	0.396	0.535

SHEET 2 OF 2
840.01

STATE OF
NORTH CAROLINA
DEPT. OF TRANSPORTATION
DIVISION OF HIGHWAYS
RALEIGH, N.C.

ENGLISH STANDARD DRAWING FOR
BRICK CATCH BASIN
12" THRU 54" PIPE

SHEET 2 OF 2
840.01

STATE OF
NORTH CAROLINA
DEPT. OF TRANSPORTATION
DIVISION OF HIGHWAYS
RALEIGH, N.C.

ENGLISH STANDARD DRAWING FOR
FRAME, GRATES, AND HOOD
FOR USE ON STANDARD CATCH BASIN

SHEET 1 OF 3
840.03

NOTE: USE TYPE "E", "F" AND "G" GRATE UNLESS OTHERWISE NOTED.

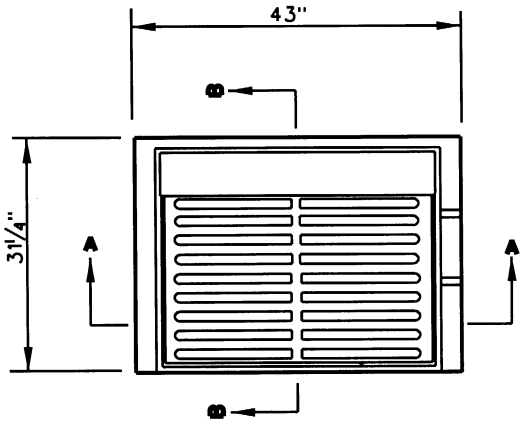

PLAN

FRAME, GRATE, & HOOD ASS'Y

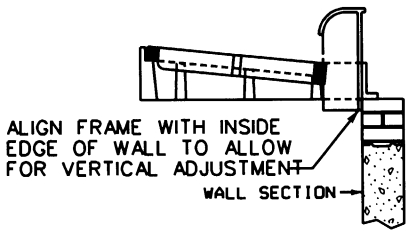

SECTION - BB

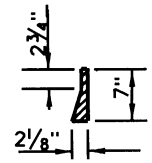

SECTION - LL

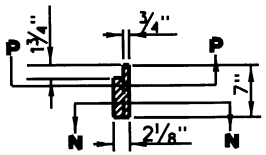

SECTION - MM

SECTION - PP

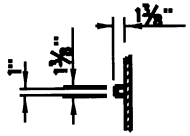

SECTION - NN

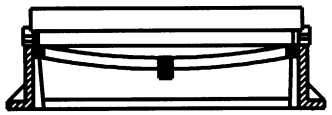

SECTION - AA

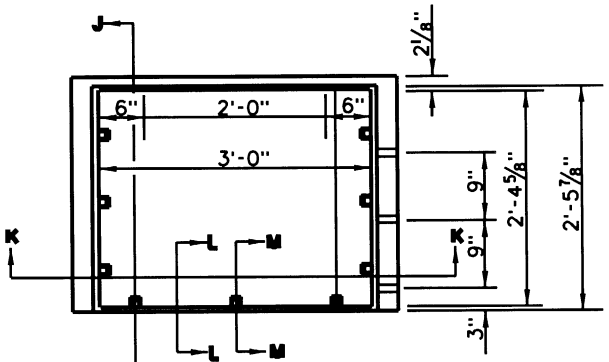

FRAME PLAN

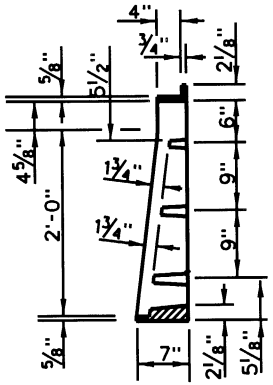

SECTION - JJ

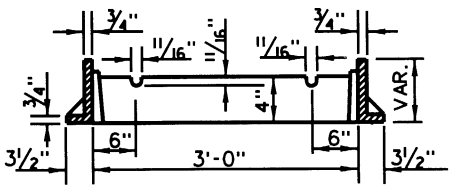

SECTION - KK

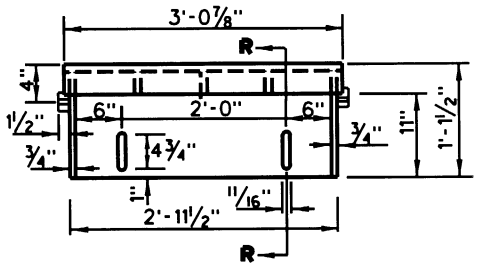

HOOD ELEVATION

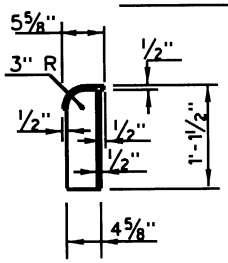

SECTION - RR

STATE OF
NORTH CAROLINA
DEPT. OF TRANSPORTATION
DIVISION OF HIGHWAYS
RALEIGH, N.C.

ENGLISH STANDARD DRAWING FOR
FRAME, GRATES, AND HOOD
FOR USE ON STANDARD CATCH BASIN

SHEET 1 OF 3
840.03

STATE OF
NORTH CAROLINA
DEPT. OF TRANSPORTATION
DIVISION OF HIGHWAYS
RALEIGH, N.C.

ENGLISH STANDARD DRAWING FOR
FRAME, GRATES, AND HOOD
FOR USE ON STANDARD CATCH BASIN

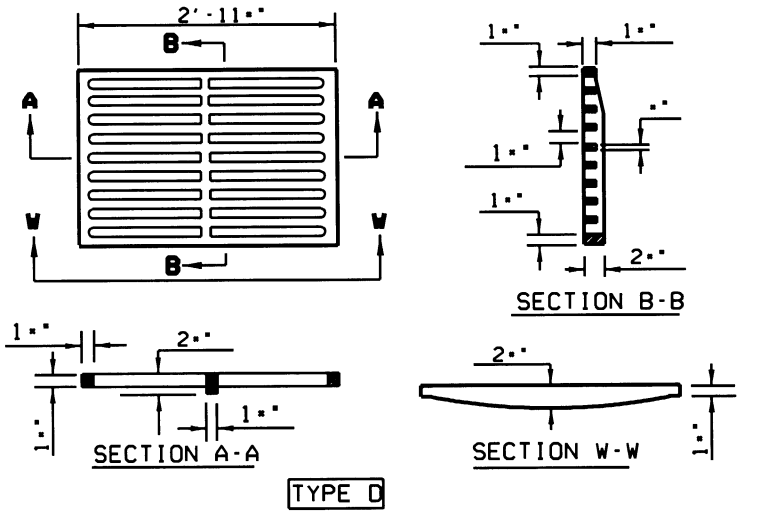

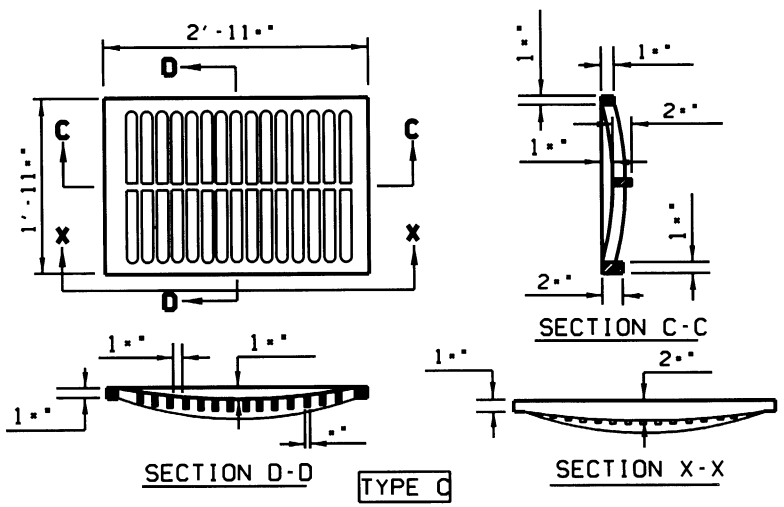

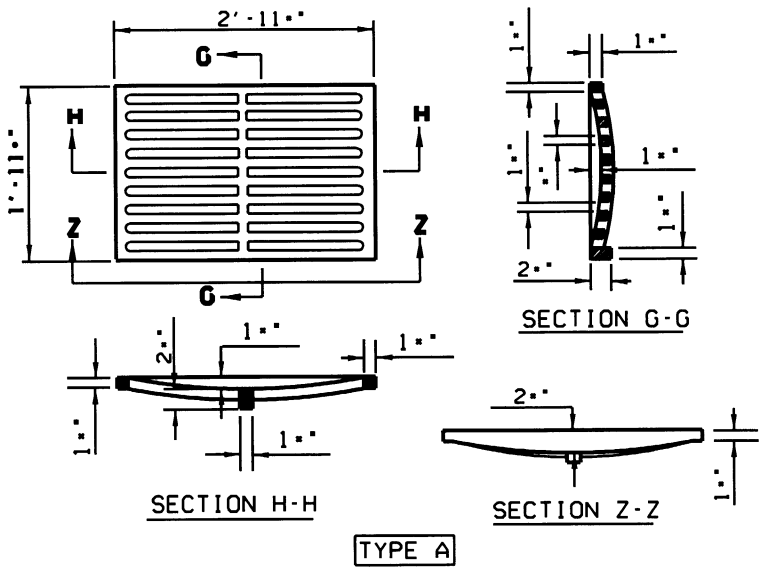

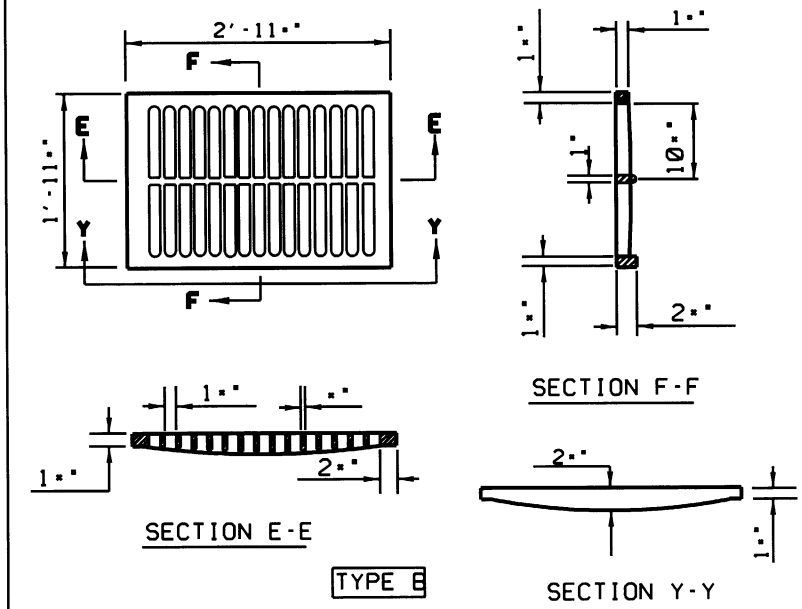

STATE OF
NORTH CAROLINA
DEPT. OF TRANSPORTATION
DIVISION OF HIGHWAYS
RALEIGH, N.C.

ENGLISH STANDARD DRAWING FOR
FRAME, GRATES, AND HOOD
FOR USE ON STANDARD CATCH BASIN

STATE OF
NORTH CAROLINA
DEPT. OF TRANSPORTATION
DIVISION OF HIGHWAYS
RALEIGH, N.C.

ENGLISH STANDARD DRAWING FOR
FRAME, GRATES, AND HOOD
FOR USE ON STANDARD CATCH BASIN

SHEET 3 OF 3
840.03

DETAIL SHOWING TYPES OF GRATES
TO BE USED ACCORDING TO WATER FLOW.

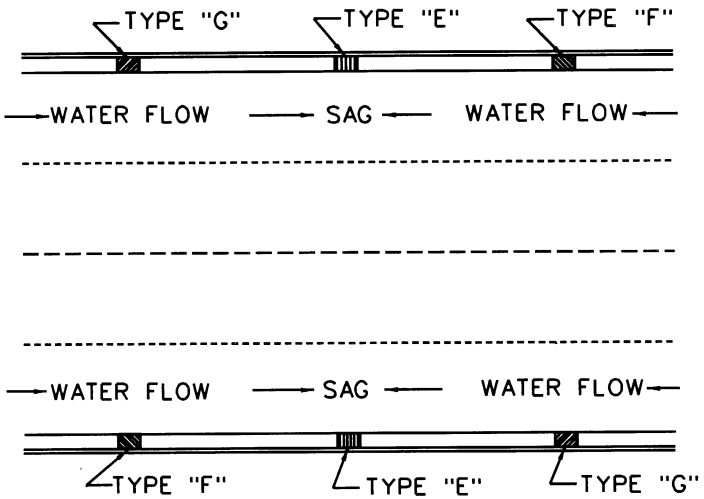

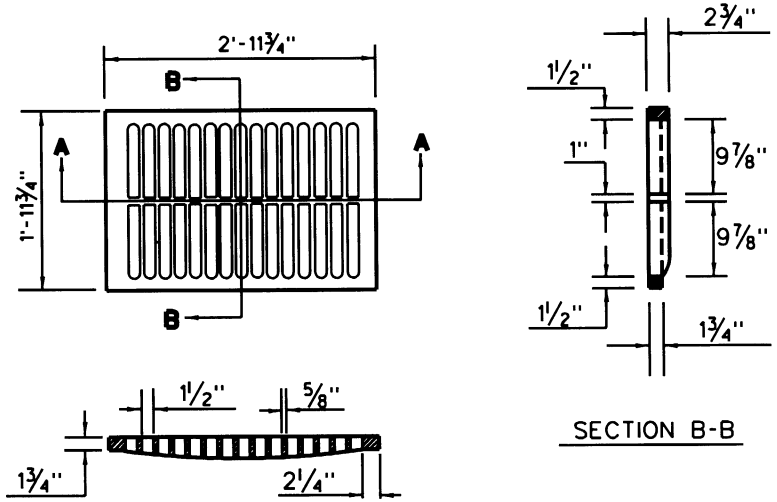

TYPE - E

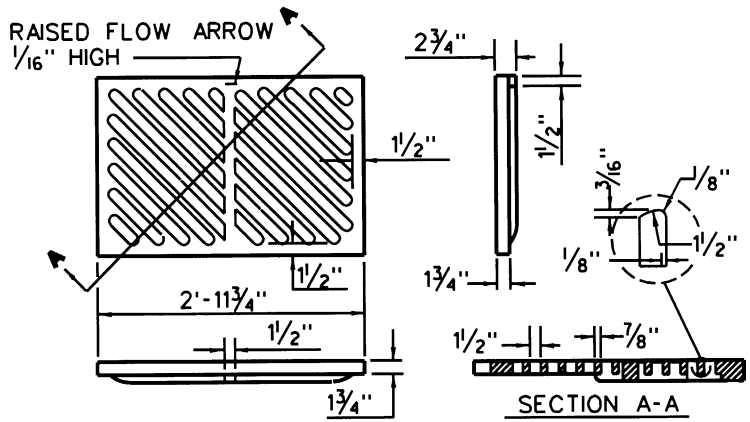

TYPE - F

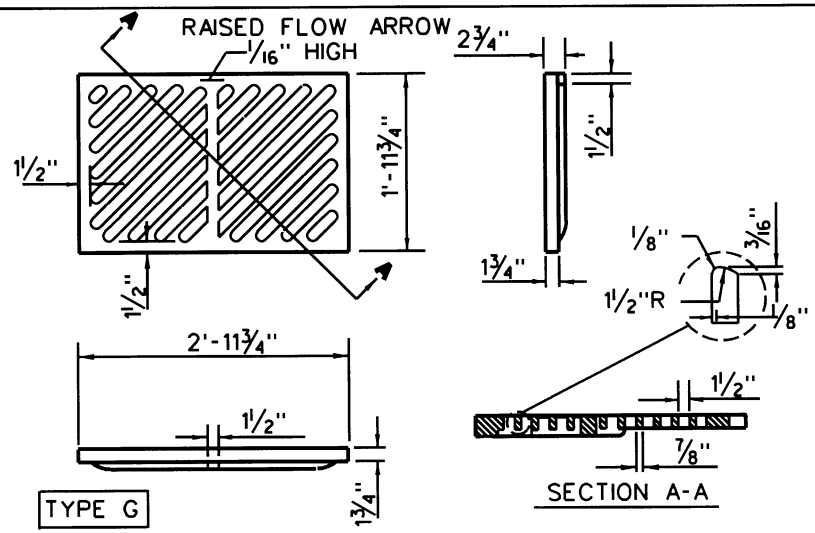

TYPE G

STATE OF
NORTH CAROLINA
DEPT. OF TRANSPORTATION
DIVISION OF HIGHWAYS
RALEIGH, N.C.

ENGLISH STANDARD DRAWING FOR
FRAME, GRATES, AND HOOD
FOR USE ON STANDARD CATCH BASIN

SHEET 3 OF 3
840.03

STATE OF
NORTH CAROLINA
DEPT. OF TRANSPORTATION
DIVISION OF HIGHWAYS
RALEIGH, N.C.

ENGLISH STANDARD DRAWING FOR
BRICK CATCH BASIN WITH
SINGLE AND MULTIPLE PIPES
12" THRU 48" PIPE

SHEET 1 OF 2
840.05

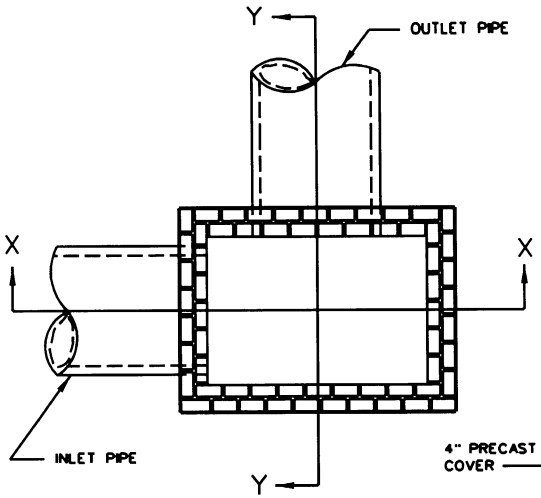

PLAN

GENERAL NOTES:

ALL CATCH BASINS OVER 3'-6" IN DEPTH TO BE PROVIDED WITH STEPS 1'-2" ON CENTERS. STEPS SHALL BE IN ACCORDANCE WITH STD. 840.66.

ALL EXPOSED CORNERS TO BE CHAMFERED 1".

CLASS "B" CONCRETE TO USED THROUGHOUT.

ALL MORTAR JOINTS ARE TO BE ½" ± ⅛".

ALL EXPOSED JOINTS WILL BE CONCAVE TOOLED.

THE 6" OPENING SHOWN MAY BE INCREASED TO 8" MAX. IF DEEMED NECESSARY BY THE ENGINEER.

FORMS ARE TO BE USED FOR THE CONSTRUCTION OF THE BOTTOM SLAB.

JUMBO BRICK WILL BE PERMITTED. CONCRETE BRICK OR 4" SOLID CONCRETE BLOCKS MAY BE USED IN LIEU OF CLAY BRICK.

IF REINFORCED CONCRETE PIPE IS SET IN BASE SLAB OF BOX, ADD TO BASE SHOWN ON STANDARD 840.00.

FOR 8'-0" IN HEIGHT OR LESS USE 8" WALL. OVER 8'-0" IN HEIGHT USE 12" WALL TO 6'-0" FROM TOP OF WALL, AND 8" WALL FOR THE REMAINING 6'-0". QUANTITIES TO BE ADJUSTED ACCORDINGLY.

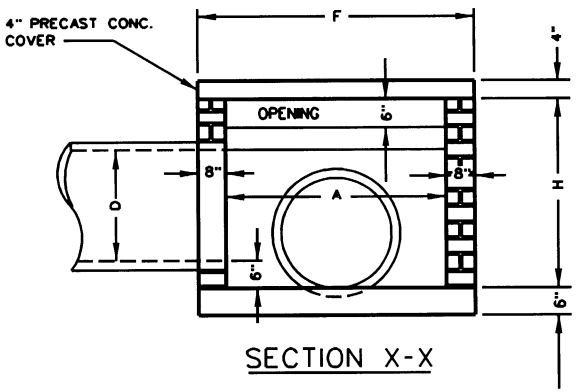

SECTION X-X

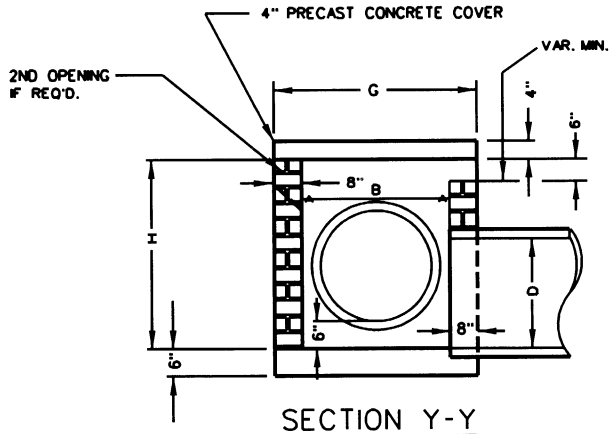

SECTION Y-Y

DIM'S OF BOX & PIPE				REINFORCING					COVER DIMENSION		CU. YDS. CONC. IN BOX			TOTAL BRICK MASONRY		DEDUCTION ONE PIPE		DED. ONE 6" THROAT OPENING
PIPE	SPAN	WIDTH	HEIGHT	BARS - X		BARS - Y		TOTAL										
D	A	B	H(MIN)	NO.	LENGTH	NO.	LENGTH	LBS	F	G	COVER	FLOOR	TOTAL	PER FT. HT.	MIN. H	C.S.	R.C.	CU.YDS.
12"	3'-6"	2'-3"	2'-4"	2	3'-4"	7	4'-7"	26	4'-10"	3'-7"	0.214	0.321	0.526	0.350	0.816	0.020	0.032	0.043
15"	3'-6"	2'-3"	2'-7"	2	3'-4"	7	4'-7"	26	4'-10"	3'-7"	0.214	0.321	0.526	0.350	0.904	0.031	0.047	0.043
18"	4'-0"	2'-8"	2'-11"	2	3'-9"	8	5'-1"	33	5'-4"	4'-0"	0.263	0.395	0.649	0.395	1.152	0.044	0.065	0.049
24"	4'-0"	2'-8"	3'-5"	2	3'-9"	8	5'-1"	33	5'-4"	4'-0"	0.263	0.395	0.649	0.395	1.350	0.078	0.113	0.049
30"	4'-0"	3'-6"	3'-11"	2	4'-7"	9	5'-1"	37	5'-4"	4'-10"	0.318	0.477	0.785	0.436	1.708	0.122	0.170	0.049
36"	4'-0"	3'-6"	4'-6"	2	4'-7"	9	5'-1"	37	5'-4"	4'-10"	0.318	0.477	0.785	0.436	1.962	0.176	0.238	0.049
42"	4'-0"	3'-6"	4'-11"	2	4'-7"	9	5'-1"	37	5'-4"	4'-10"	0.318	0.477	0.785	0.436	2.144	0.240	0.323	0.049
48"	4'-6"	4'-0"	5'-5"	2	5'-1"	10	5'-7"	45	5'-10"	5'-4"	0.384	0.576	0.946	0.486	2.633	0.313	0.422	0.056

STATE OF
NORTH CAROLINA
DEPT. OF TRANSPORTATION
DIVISION OF HIGHWAYS
RALEIGH, N.C.

ENGLISH STANDARD DRAWING FOR
BRICK CATCH BASIN WITH
SINGLE AND MULTIPLE PIPES
12" THRU 48" PIPE

SHEET 1 OF 2
840.05

STATE OF
NORTH CAROLINA
DEPT. OF TRANSPORTATION
DIVISION OF HIGHWAYS
RALEIGH, N.C.

ENGLISH STANDARD DRAWING FOR
BRICK CATCH BASIN WITH
SINGLE AND MULTIPLE PIPES
12" THRU 48" PIPE

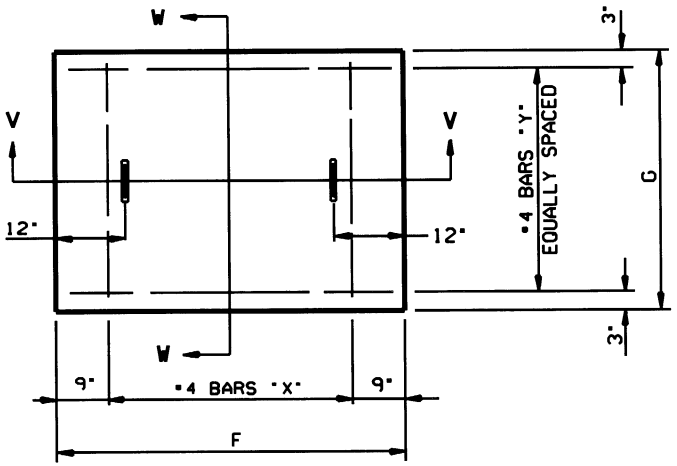

PLAN

PLAN OF PRECAST COVER OR CAST IN PLACE

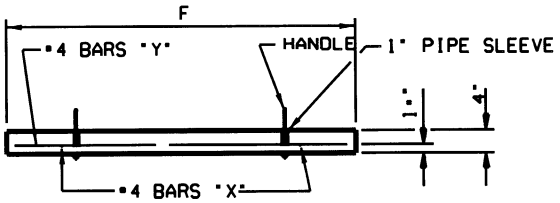

SECTION V-V

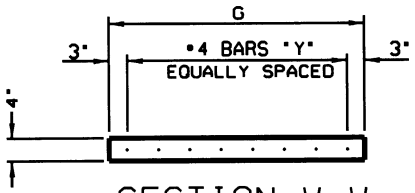

SECTION W-W

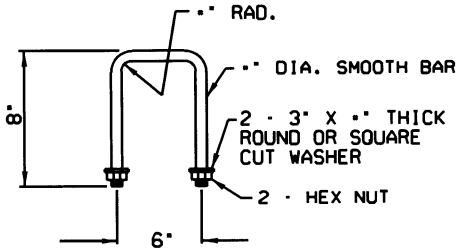

DETAIL OF HANDLE

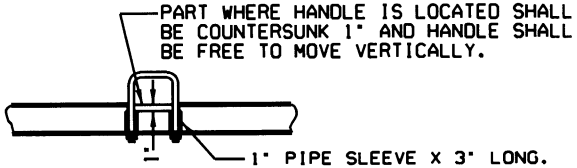

PART SECTION

THRU COVER SHOWING HANDLE

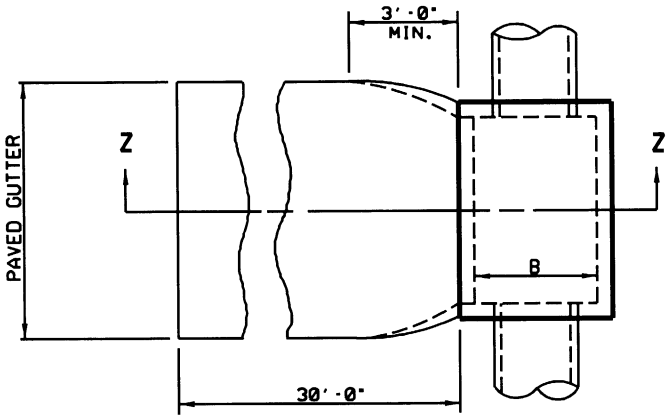

PLAN OF CATCH BASIN IN MEDIAN STRIP

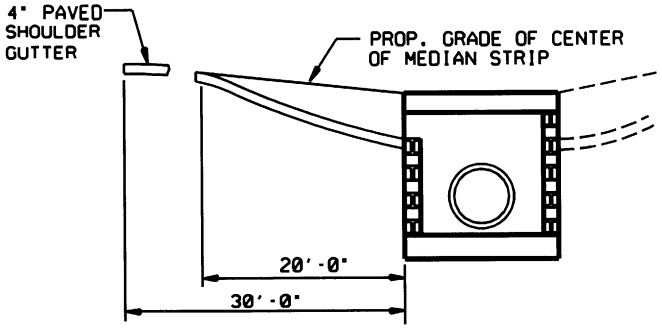

SECTION Z-Z

DETAIL SHOWING METHOD OF PLACING CATCH BASIN
AND PAVED SHOULDER GUTTER IN MEDIAN STRIP

SHEET 2 OF 2
840.05

STATE OF
NORTH CAROLINA
DEPT. OF TRANSPORTATION
DIVISION OF HIGHWAYS
RALEIGH, N.C.

ENGLISH STANDARD DRAWING FOR
BRICK CATCH BASIN WITH
SINGLE AND MULTIPLE PIPES
12" THRU 48" PIPE

SHEET 2 OF 2
840.05

STATE OF
NORTH CAROLINA
DEPT. OF TRANSPORTATION
DIVISION OF HIGHWAYS
RALEIGH, N.C.

ENGLISH STANDARD DRAWING FOR
BRICK DROP INLET
12" THRU 30" PIPE

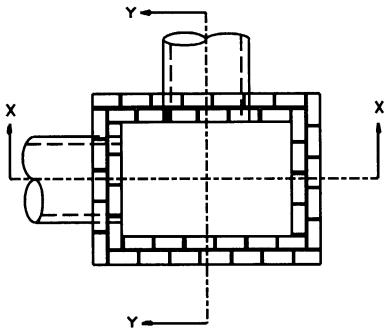

PLAN
WITH COPING REMOVED

GENERAL NOTES:

ALL DROP INLETS OVER 3'-6" IN DEPTH TO BE PROVIDED WITH STEPS 1'-2" ON CENTERS. STEPS SHALL BE IN ACCORDANCE WITH STD. 840.66.

CLASS "B" CONCRETE TO BE USED.

ALL MORTAR JOINTS ARE 1/2" ± 1/8".

FORMS ARE TO BE USED FOR THE CONSTRUCTION OF THE BOTTOM SLAB.

BRICK MASONRY DROP INLET NOT TO BE USED IN LOCATIONS SUBJECT TO TRAFFIC.

JUMBO BRICK WILL BE PERMITTED. CONCRETE BRICK OR 4" SOLID CONCRETE BLOCKS MAY BE USED IN LIEU OF CLAY BRICK.

IF REINFORCED CONCRETE PIPE IS SET IN BASE SLAB OF BOX, ADD TO BASE AS SHOWN ON STANDARD 840.00.

FOR 8'-0" IN HEIGHT OR LESS USE 8" WALL. OVER 8'-0" IN HEIGHT USE 12" WALL TO 6'-0" FROM TOP OF WALL, AND 8" WALL FOR THE REMAINING 6'-0". QUANTITIES TO BE ADJUSTED ACCORDINGLY.

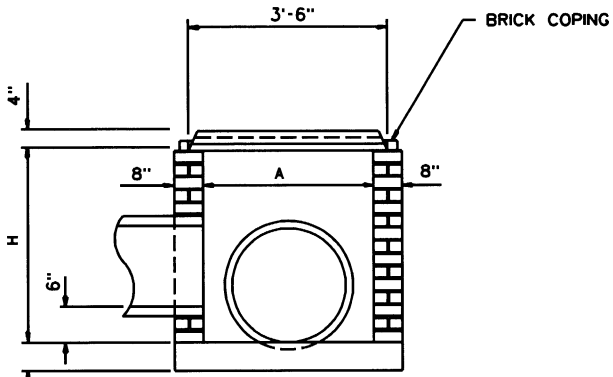

SECTION X-X

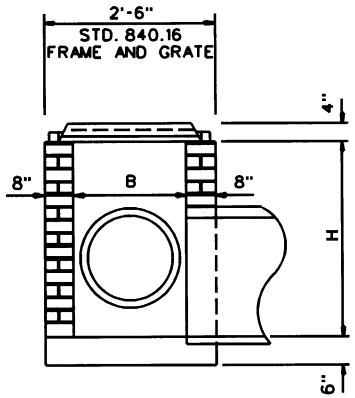

SECTION Y-Y

DIMENSIONS AND QUANTITIES									
DIMENSIONS OF BOX & PIPE				CONC. IN BASE	TOTAL BRICK MASONRY			DEDUCTIONS FOR ONE PIPE	
PIPE	SPAN	WIDTH	HEIGHT		PER FT. HEIGHT	BRICK COPING	MIN. H		
D	A	B	H	CU. YDS.				C.S.	R.C.
12"	3'-0"	2'-0"	2'-8"	0.267	0.313	0.037	0.871	0.020	0.032
15"			3'-0"	0.267	0.313	0.037	0.976	0.031	0.047
18"			3'-5"	0.267	0.313	0.037	1.106	0.044	0.065
24"			4'-0"	0.267	0.313	0.037	1.289	0.078	0.113
30"	3'-0"	2'-0"	4'-3"	0.267	0.313	0.037	1.367	0.122	0.170

SHEET 1 OF 1
840.15

STATE OF
NORTH CAROLINA
DEPT. OF TRANSPORTATION
DIVISION OF HIGHWAYS
RALEIGH, N.C.

ENGLISH STANDARD DRAWING FOR
BRICK DROP INLET
12" THRU 30" PIPE

SHEET 1 OF 1
840.15

STATE OF
NORTH CAROLINA
DEPT. OF TRANSPORTATION
DIVISION OF HIGHWAYS
RALEIGH, N.C.

ENGLISH STANDARD DRAWING FOR
DROP INLET FRAME AND GRATE
FOR USE WITH STD. DWG.S 840.14 AND 840.15

SHEET 1 OF 1
840.16

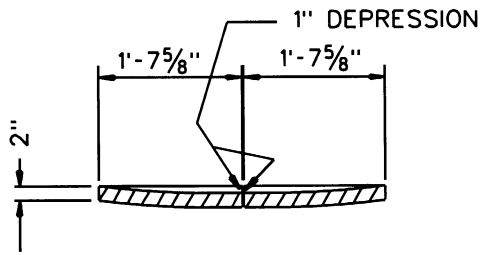

SECTION G-G

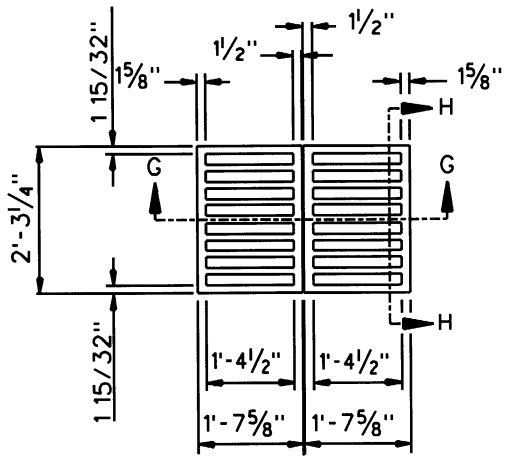

PLAN OF GRATING
CAST IRON

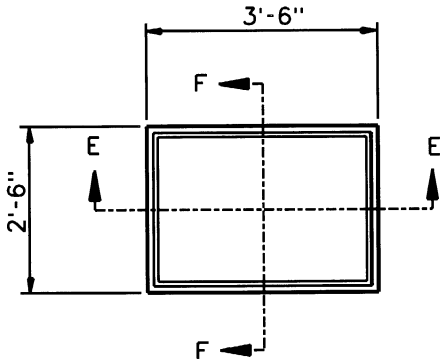

PLAN OF FRAME
CAST IRON

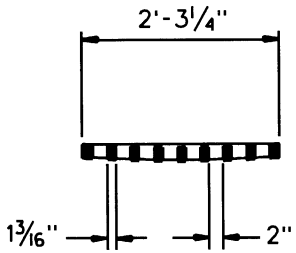

SECTION H-H

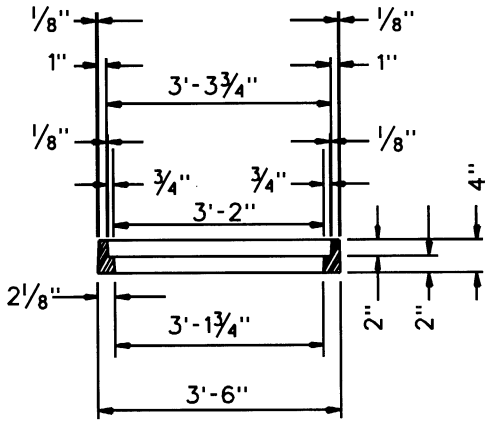

SECTION E-E

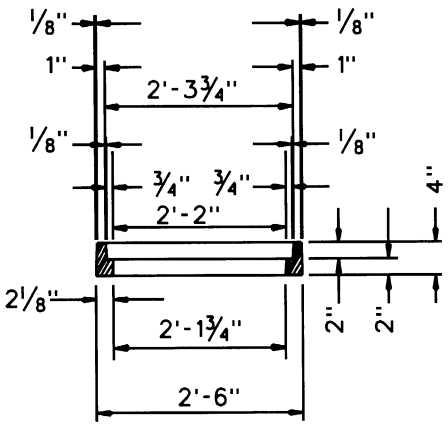

SECTION F-F

STATE OF
NORTH CAROLINA
DEPT. OF TRANSPORTATION
DIVISION OF HIGHWAYS
RALEIGH, N.C.

ENGLISH STANDARD DRAWING FOR
DROP INLET FRAME AND GRATE
FOR USE WITH STD. DWG.S 840.14 AND 840.15

SHEET 1 OF 1
840.16

STATE OF
NORTH CAROLINA
DEPT. OF TRANSPORTATION
DIVISION OF HIGHWAYS
RALEIGH, N.C.

ENGLISH STANDARD DRAWING FOR CONCRETE JUNCTION BOX

(WITH OPTIONAL MANHOLE)

12" THRU 66" PIPE

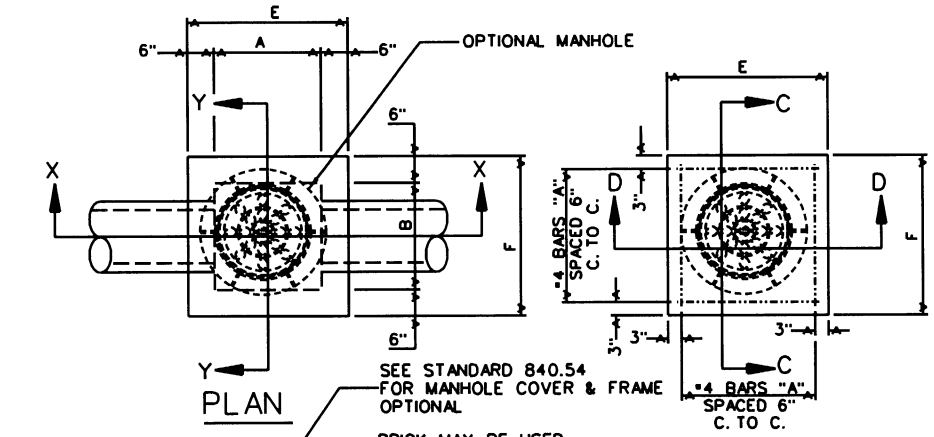

GENERAL NOTES:

ALL EXPOSED CORNERS TO BE CHAMFERED 1".

CLASS "B" CONCRETE TO BE USED THROUGHOUT.

OPTIONAL CONSTRUCTION - MONOLITHIC POUR, 2" KEYWAY, OR #4 BAR DOWELS AT 12" CENTERS AS DIRECTED BY THE ENGINEER.

FORMS ARE TO BE USED FOR THE CONSTRUCTION OF THE BOTTOM SLAB.

IF REINFORCED CONCRETE PIPE IS SET IN BASE SLAB OF BOX, ADD TO BASE AS SHOWN ON STANDARD NO. 840.00.

ALL JUNCTION BOXES OVER 3'-6" IN DEPTH SHALL BE PROVIDED WITH STEPS 1'-2" ON CENTERS. STEPS SHALL BE IN ACCORDANCE WITH STD. NO. 840.66.

ADJUST THE STEEL, CONCRETE AND BRICK MASONRY QUANTITIES TO INCLUDE THE ADDITION OF THE MANHOLE (I.E. DIAGONAL BARS SHORTENED AROUND OPENING IN TOP SLAB, ADDITIONAL VARIABLE HEIGHT BRICK MASONRY, OPENING IN TOP SLAB.)

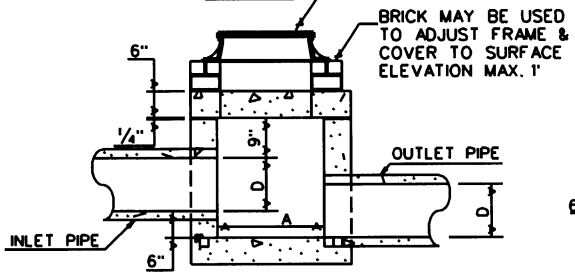

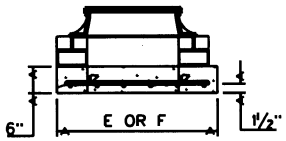

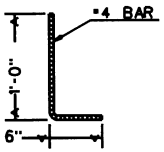

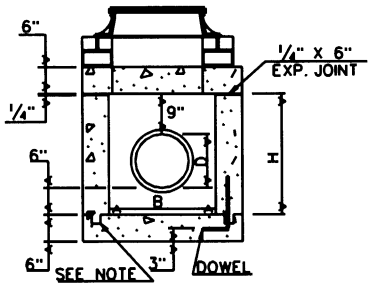

DIMENSIONS AND QUANTITIES FOR CONCRETE JUNCTION BOXES

DIMENSIONS OF BOX AND PIPE				REINFORCEMENT BARS "A"		COVER DIMENSIONS		CUBIC YARDS IN BOX			TOTAL QUANTITIES BOX AND COVER		DEDUCTIONS FOR ONE PIPE CU.YDS.	
PIPE	SPAN	WIDTH	HEIGHT											
D	A	B	H	NO.	LENGTH	E	F	COVER	FLOOR	WALL/ FT. OF HT.	LBS. REINF	CU. YDS. MIN. "H"	C.S.	R.C.
12"	2'-0"	2'-0"	2'-3"	12	2'-9"	3'-0"	3'-0"	0.167	0.167	0.185	22	0.750	0.015	0.024
15"	2'-3"	2'-3"	2'-6"	12	3'-0"	3'-3"	3'-3"	0.196	0.196	0.204	24	0.902	0.023	0.036
18"	2'-6"	2'-6"	2'-9"	14	3'-3"	3'-6"	3'-6"	0.227	0.227	0.222	30	1.065	0.033	0.049
24"	3'-0"	3'-0"	3'-3"	16	3'-9"	4'-0"	4'-0"	0.296	0.296	0.259	40	1.434	0.059	0.085
30"	3'-6"	3'-6"	3'-9"	18	4'-3"	4'-6"	4'-6"	0.375	0.375	0.296	51	1.860	0.092	0.127
36"	4'-0"	4'-0"	4'-3"	20	4'-9"	5'-0"	5'-0"	0.463	0.463	0.333	64	2.341	0.132	0.178
42"	4'-6"	4'-6"	4'-9"	22	5'-3"	5'-6"	5'-6"	0.560	0.560	0.370	77	2.878	0.180	0.243
48"	5'-0"	5'-0"	5'-3"	24	5'-9"	6'-0"	6'-0"	0.667	0.667	0.407	92	3.471	0.235	0.317
54"	5'-6"	5'-6"	5'-9"	26	6'-3"	6'-6"	6'-6"	0.782	0.782	0.444	109	4.117	0.297	0.401
60"	6'-0"	6'-0"	6'-3"	28	6'-9"	7'-0"	7'-0"	0.907	0.907	0.481	127	4.820	0.367	0.495
66"	6'-6"	6'-6"	6'-9"	30	7'-3"	7'-6"	7'-6"	1.042	1.042	0.518	145	5.581	0.444	0.589

SHEET 1 OF 1

840.31

STATE OF
NORTH CAROLINA
DEPT. OF TRANSPORTATION
DIVISION OF HIGHWAYS
RALEIGH, N.C.

ENGLISH STANDARD DRAWING FOR
CONCRETE JUNCTION BOX
(WITH OPTIONAL MANHOLE)
12" THRU 66" PIPE

SHEET 1 OF 1

840.31

STATE OF
NORTH CAROLINA
DEPT. OF TRANSPORTATION
DIVISION OF HIGHWAYS
RALEIGH, N.C.

ENGLISH STANDARD DRAWING FOR
BRICK JUNCTION BOX
(WITH OPTIONAL MANHOLE)
12" THRU 66" PIPE

SHEET 1 OF 1
840.32

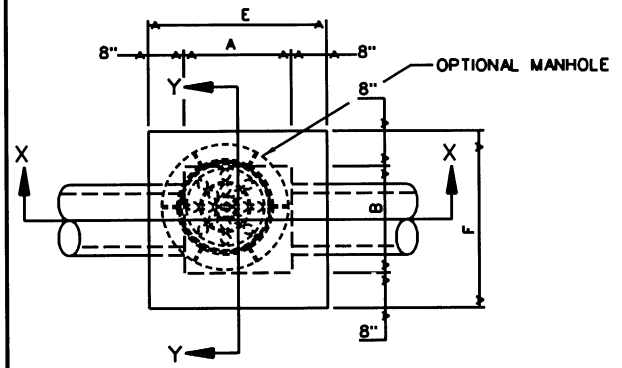

PLAN

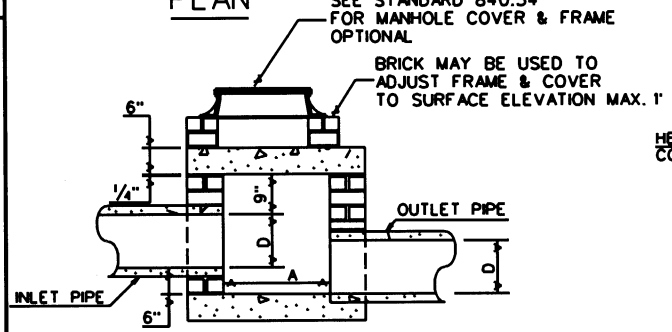

SECTION X-X

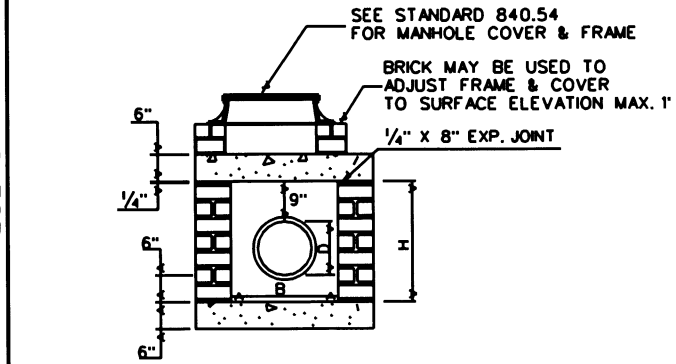

SECTION Y-Y

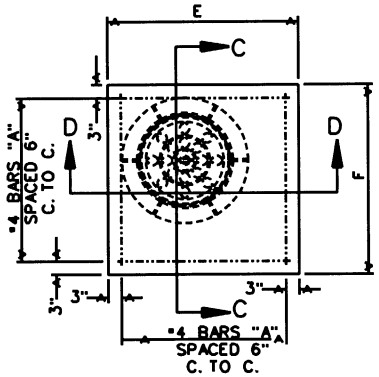

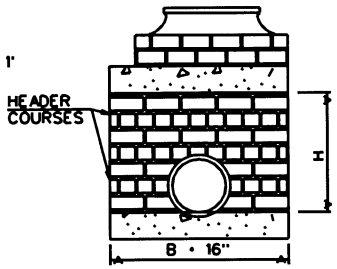

OUTLET ELEVATION

GENERAL NOTES:

ALL EXPOSED CORNERS TO BE CHAMFERED 1".

CLASS "B" CONCRETE TO BE USED.

MORTAR JOINTS 1/2" ± 1/8" THICK.

ALL EXPOSED JOINTS SHALL BE CONCAVE TOOLED.

FORMS ARE TO BE USED FOR THE CONSTRUCTION OF THE BOTTOM SLAB.

JUMBO BRICK WILL BE PERMITTED. CONCRETE BRICK OR 4" SOLID CONCRETE BLOCKS MAY BE USED IN LIEU OF CLAY BRICK.

FOR 8'-0" IN HEIGHT OR LESS, USE 8" WALL. OVER 8'-0" IN HEIGHT, USE 12" WALL TO 6'-0" FROM TOP OF WALL, AND 8" WALL FOR THE REMAINING 6'-0". DIMENSIONS AND QUANTITIES TO BE ADJUSTED ACCORDINGLY.

IF REINFORCED CONCRETE PIPE IS SET IN BASE SLAB OF BOX, ADD TO BASE AS SHOWN ON STANDARD NO. 840.00.

ALL JUNCTION BOXES OVER 3'-6" IN DEPTH SHALL BE PROVIDED WITH STEPS 1'-2" ON CENTERS. STEPS SHALL BE IN ACCORDANCE WITH STD. NO. 840.66.

ADJUST THE STEEL, CONCRETE AND BRICK MASONRY QUANTITIES TO INCLUDE THE ADDITION OF THE MANHOLE (I.E. DIAGONAL BARS SHORTENED AROUND OPENING IN TOP SLAB, ADDITIONAL VARIABLE HEIGHT BRICK MASONRY, OPENING IN TOP SLAB.)

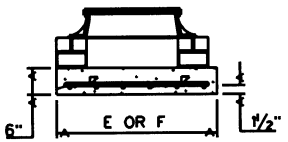

SECTION
C-C OR D-D

DIMENSIONS AND QUANTITIES FOR BRICK JUNCTION BOXES

DIMENSIONS OF BOX AND PIPE				REINFORCEMENT BARS		COVER DIMENSIONS		CUBIC YARDS			DEDUCTIONS FOR ONE PIPE CU.YDS.	
PIPE	SPAN	WIDTH	HEIGHT					CONC.	BRICK MASONRY			
D	A	B	H	NO.	LENGTH	E	F	BASE & COVER CU. YD.	MIN. HEIGHT CU. YD.	WALL PER FT. HT. CU. YD.	C.S.	R.C.
12"	2'-0"	2'-0"	2'-3"	12	3'-1"	3'-4"	3'-4"	0.412	0.591	0.263	0.020	0.032
15"	2'-0"	2'-0"	2'-6"	12	3'-1"	3'-4"	3'-4"	0.412	0.657	0.263	0.031	0.047
18"	2'-4"	2'-4"	2'-9"	14	3'-5"	3'-8"	3'-8"	0.498	0.814	0.296	0.044	0.065
24"	3'-0"	3'-0"	3'-3"	16	4'-1"	4'-4"	4'-4"	0.695	1.176	0.362	0.078	0.113
30"	3'-4"	3'-4"	3'-9"	16	4'-5"	4'-8"	4'-8"	0.807	1.481	0.395	0.122	0.170
36"	4'-0"	4'-0"	4'-3"	20	5'-1"	5'-4"	5'-4"	1.053	1.959	0.461	0.176	0.238
42"	4'-8"	4'-8"	4'-9"	22	5'-9"	6'-0"	6'-0"	1.333	2.503	0.527	0.240	0.323
48"	5'-0"	5'-0"	5'-3"	24	6'-1"	6'-4"	6'-4"	1.486	2.940	0.560	0.313	0.422
54"	5'-6"	5'-6"	5'-9"	26	6'-7"	6'-10"	6'-10"	1.729	3.502	0.609	0.396	0.535
60"	6'-0"	6'-0"	6'-3"	28	7'-1"	7'-4"	7'-4"	1.992	4.113	0.658	0.489	0.660
66"	6'-6"	6'-6"	6'-9"	30	7'-7"	7'-10"	7'-10"	2.273	4.778	0.708	0.591	0.798

STATE OF
NORTH CAROLINA
DEPT. OF TRANSPORTATION
DIVISION OF HIGHWAYS
RALEIGH, N.C.

ENGLISH STANDARD DRAWING FOR
BRICK JUNCTION BOX
(WITH OPTIONAL MANHOLE)
12" THRU 66" PIPE

SHEET 1 OF 1
840.32

STATE OF
NORTH CAROLINA
DEPT. OF TRANSPORTATION
DIVISION OF HIGHWAYS
RALEIGH, N.C.

ENGLISH STANDARD DRAWING FOR
TRAFFIC BEARING JUNCTION BOX
FOR USE WITH PIPES 36" AND UNDER

SHEET 1 OF 2
840.34

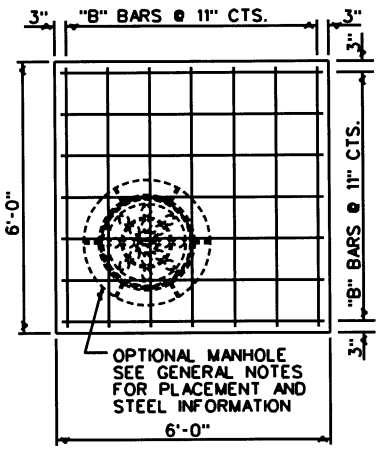

PLAN OF TOP SLAB

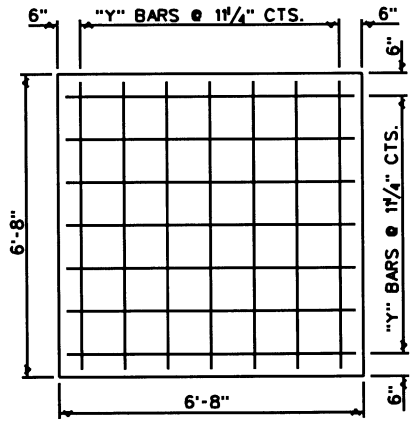

PLAN OF BASE SLAB

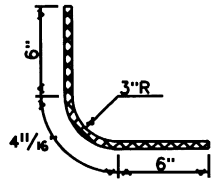

DOWEL "C"

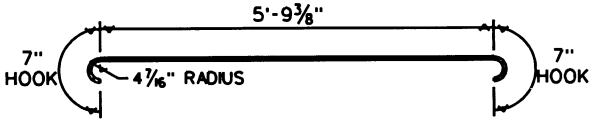

"Y" BARS

BAR DIMENSIONS ARE OUT TO OUT

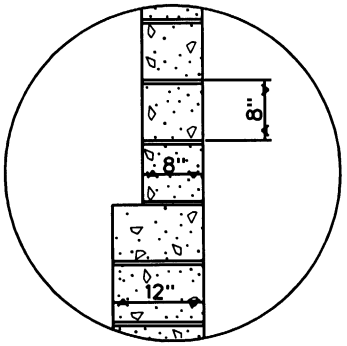

INSET "A"

CONCRETE BLOCK

NOTE 1: SECTION "B" OF THE PROPOSED WALL SHALL BE 8" THICK.
SECTION "A" SHALL BE 12" THICK.

NOTE 2: IF PROPOSED STRUCTURE EXCEEDS 12'-0" VERTICAL HEIGHT A DESIGN WILL BE REQUIRED FOR APPROVAL.

NOTE 3: ALL REINFORCING STEEL SHALL BE SINGLE MAT; EXCEPT DOUBLE MAT STEEL MAY BE USED IN LIEU OF HOOK BARS IN BASE SLAB.

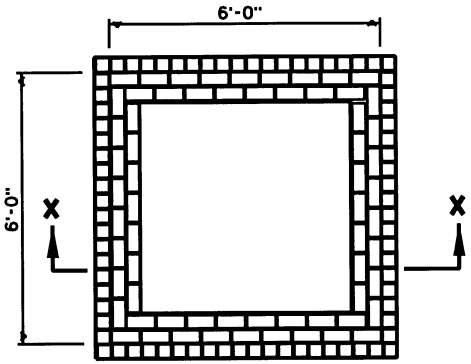

PLAN

(WITHOUT TOP)

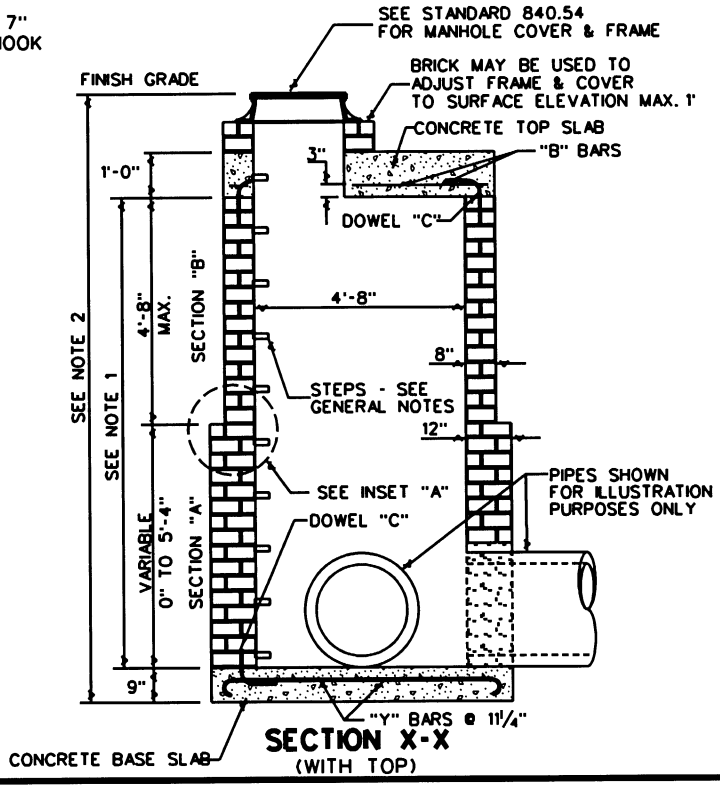

SECTION X-X

(WITH TOP)

STATE OF
NORTH CAROLINA
DEPT. OF TRANSPORTATION
DIVISION OF HIGHWAYS
RALEIGH, N.C.

ENGLISH STANDARD DRAWING FOR
TRAFFIC BEARING JUNCTION BOX
FOR USE WITH PIPES 36" AND UNDER

SHEET 1 OF 2
840.34

STATE OF
NORTH CAROLINA
DEPT. OF TRANSPORTATION
DIVISION OF HIGHWAYS
RALEIGH, N.C.

ENGLISH STANDARD DRAWING FOR
TRAFFIC BEARING JUNCTION BOX
FOR USE WITH PIPES 36" AND UNDER

SHEET 2 OF 2
840.34

GENERAL NOTES:

STANDARD OR JUMBO BRICK SHALL BE USED FOR WALL CONSTRUCTION. SOLID CONCRETE BRICK OR BLOCK ARE OPTIONAL WALL CONSTRUCTION MATERIAL.

PRECAST UNITS MADE OF CLASS "AA" CONCRETE MAY BE USED IN LIEU OF BRICK MASONRY CONTRUCTION. DESIGN OF PRECAST UNITS SHALL BE SUBMITTED FOR APPROVAL PRIOR TO CONSTRUCTION.

ALL ADJUSTMENTS TO WALLS, SLABS OR REINFORCING MATERIAL SHALL BE INCLUDED IN THE UNIT PRICE BID FOR EACH UNIT.

OPTIONAL MANHOLE SHALL BE INSTALLED IN POSITION AS DIRECTED BY THE ENGINEER. ALL REBAR CROSSING THIS OPENING SHALL BE CUT OR BENT TO ALLOW 2" MINIMUM CONCRETE COVERAGE. THE OPENING SHALL BE ENCLOSED WITH 8 "A" BARS TIED TO THE REBAR MAT AND SET SO A MINIMUM OF A 3" CONCRETE COVERAGE IS OBTAINED. REFERENCE STD. NO. 840.54 FOR MANHOLE INFORMATION.

JUNCTION BOXES OVER 3'-6" IN DEPTH WITH MANHOLES SHALL REQUIRE STEPS TO BE PLACED ON 1'-2" CENTERS. REFERENCE STD. NO. 840.66.

DOWEL "C" BARS SHALL BE SPACED AT A MAXIMUM OF 12" CENTERS.

MAXIMUM DEPTH OF THIS UNIT AS SHOWN IS 12'.

CONSTRUCTION OF THE JUNCTION BOX SHALL BE IN ACCORDANCE WITH SECTIONS 830, 832, 834 AND 840 OF THE STANDARD SPECIFICATIONS.

BILL OF MATERIAL

BAR	QTY.	SIZE	LENGTH	WEIGHT
A	8	#5	1'-2"	9.7
B	14	#5	5'-6"	80.3
C	52	#4	1'-4 11/16"	48.5
Y	14	#5	6'-11 3/8"	101.5
STEEL TOTAL WEIGHT				239.8
CU. YDS. CLASS "AA" CONC.				2.6
CU. YDS. BRICK/FT. HT. (8")				0.53
CU. YDS. BRICK/FT. HT. (12")				0.84

STATE OF
NORTH CAROLINA
DEPT. OF TRANSPORTATION
DIVISION OF HIGHWAYS
RALEIGH, N.C.

ENGLISH STANDARD DRAWING FOR
TRAFFIC BEARING JUNCTION BOX
FOR USE WITH PIPES 36" AND UNDER

SHEET 2 OF 2
840.34

STATE OF
NORTH CAROLINA
DEPT. OF TRANSPORTATION
DIVISION OF HIGHWAYS
RALEIGH, N.C.

ENGLISH STANDARD DRAWING FOR
TRAFFIC BEARING DROP INLET
FOR DOUBLE FRAME AND GRATES

SHEET 1 OF 2
840.35

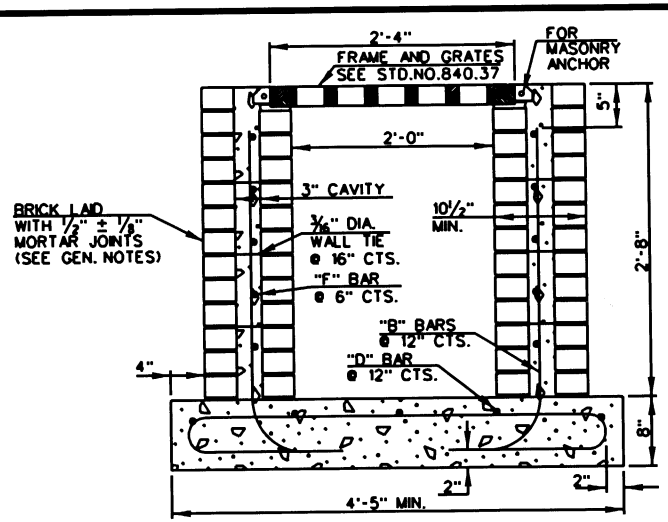

SECTION X-X

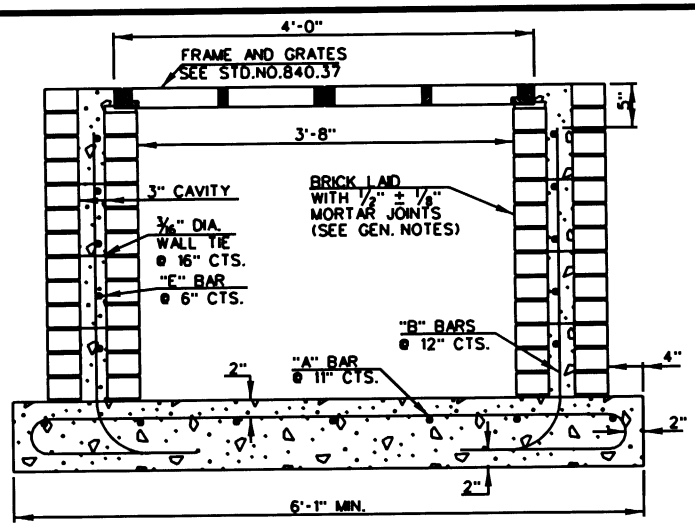

SECTION Y-Y

BRICK ALT.

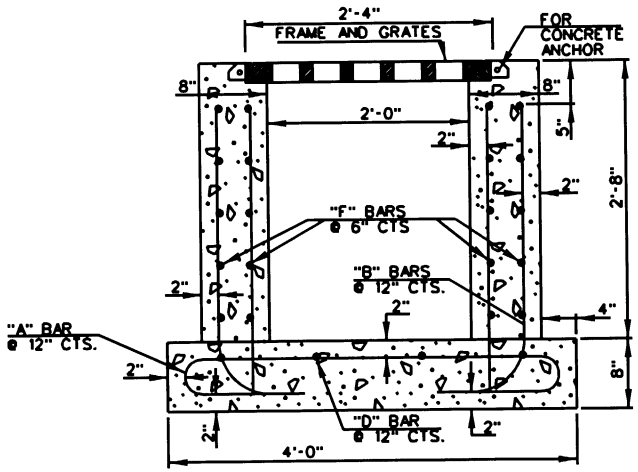

SECTION X-X

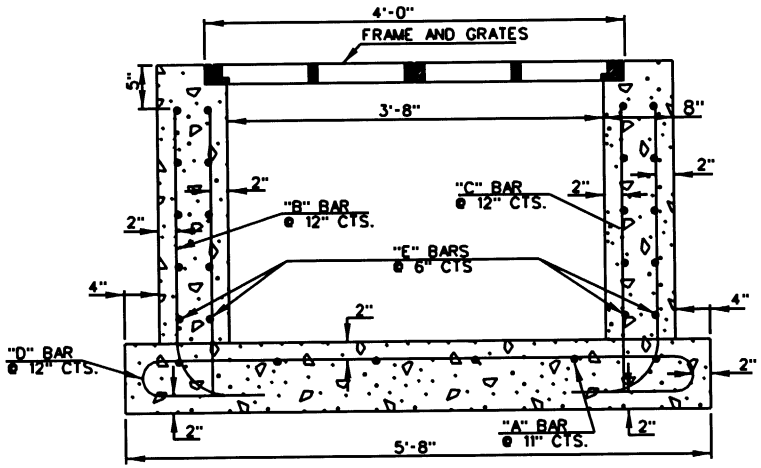

SECTION Y-Y

CONCRETE ALT.

NOTE:
MAX. PIPE DIAMETER IS 18" R.C.P.

NOTES:
- HORIZONTAL AND VERTICAL DIMENSIONS MAY BE ADJUSTED AS THE FIELD CONDITIONS AND/OR ALTERNATE DESIGN REQUIRE.
- MAXIMUM HEIGHT FOR THIS STRUCTURE SHALL BE 14'-0".
- ALL ADJUSTMENTS ARE TO BE MADE AS DIRECTED BY THE ENGINEER.
- DEPTH OF STEEL GRATE WILL REQUIRE DEEPER SEAT ALONG SHORT WALLS.

STATE OF
NORTH CAROLINA
DEPT. OF TRANSPORTATION
DIVISION OF HIGHWAYS
RALEIGH, N.C.

ENGLISH STANDARD DRAWING FOR
TRAFFIC BEARING DROP INLET
FOR DOUBLE FRAME AND GRATES

SHEET 1 OF 2
840.35

STATE OF
NORTH CAROLINA
DEPT. OF TRANSPORTATION
DIVISION OF HIGHWAYS
RALEIGH, N.C.

ENGLISH STANDARD DRAWING FOR
TRAFFIC BEARING DROP INLET
FOR DOUBLE FRAME AND GRATES

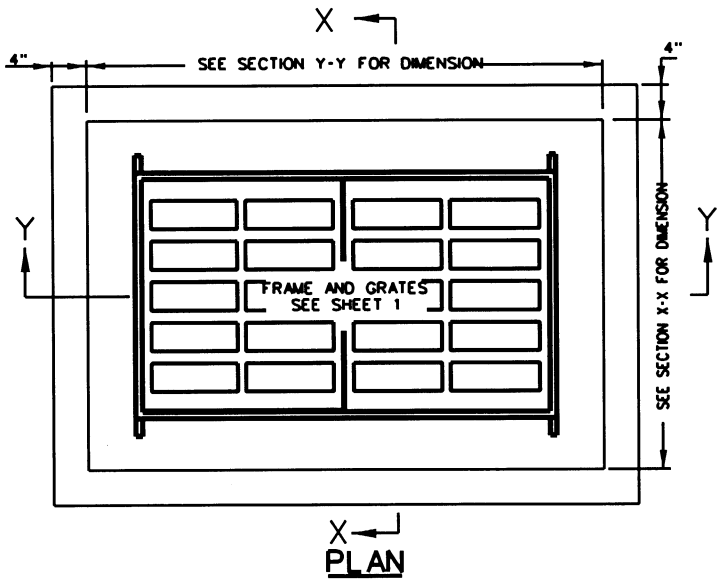

PLAN

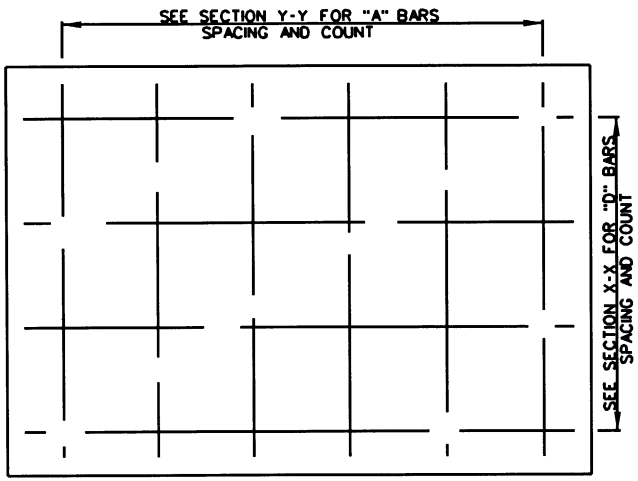

PLAN OF BASE

BILL OF MATERIALS							
COMMON		CONCRETE ALT.			BRICK ALT.		
BAR	SIZE	LENGTH	QUANTITY	WEIGHT	LENGTH	QUANTITY	WEIGHT
A	#5	6'-4½"	6	39.9	7'-7½"	6	47.7
B	#5	3'-4½"	16	56.3	3'-4½"	16	56.3
C	#5	2'-8"	14	38.9	-0-	-0-	-0-
D	#5	8'-0½"	4	33.6	9'-3½"	4	38.8
E	#5	3'-0"	20	62.6	3'-0"	10	31.3
F	#5	4'-8"	20	97.3	4'-8"	10	48.7
REINF. STEEL (TOTAL WEIGHT LBS.)				328.6			222.8
CONCRETE IN BASE (CUBIC YARDS)				0.56			0.69
CONCRETE IN WALLS (CUBIC YARDS)				0.92			0.36
BRICK IN WALLS (CUBIC YARDS)				-0-			1.36
CONCRETE TOTAL (CUBIC YARDS)				1.48			1.05
BRICK & CONCRETE TOTAL (CUBIC YARDS)				1.48			2.41
CONC. CUBIC YARDS IN WALL/FOOT OF HEIGHT				0.35			0.14
BRICK CUBIC YARDS IN WALL/FOOT OF HEIGHT				-0-			0.51
LBS. OF REINF. STEEL IN WALL/FOOT OF HEIGHT				94.9			47.6

STRAIGHT BARS

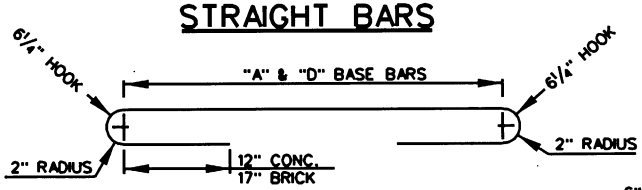

BASE BARS

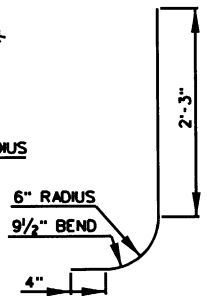

CORNER BARS

GENERAL NOTES:
- ALL EXPOSED CONCRETE CORNERS SHALL BE CHAMFERED 1".
- FORMS SHALL BE USED TO CONSTRUCT THE BOTTOM SLAB.
- IF PIPES ARE SET IN THE BASE FOLLOW CONSTRUCTION PROCEDURES SHOWN BY STD. DWG. 840.00.
- PRECAST UNITS MADE OF CLASS 'AA' CONCRETE MAY BE USED IN LIEU OF BRICK MASONRY CONSTRUCTION.
- REINFORCING STEEL COST SHALL BE INCLUSIVE IN THE UNIT OR LINEAR FOOT BID PRICE FOR "MASONRY DRAINAGE STRUCTURE".
- REFERENCE STD. DWG. 840.25 FOR FRAME ANCHORAGE.
- CONCRETE BRICK, JUMBO BRICK AND 4" SOLID CONCRETE BLOCK WILL BE PERMITTED
- DROP INLETS OVER 3'-6" DEEP SHALL BE PROVIDED WITH STEPS AS DIRECTED BY STD. DWG. 840.66.
- FRAME AND GRATES SHALL BE SEPARATE CONTRACT ITEM.

STATE OF
NORTH CAROLINA
DEPT. OF TRANSPORTATION
DIVISION OF HIGHWAYS
RALEIGH, N.C.

ENGLISH STANDARD DRAWING FOR
TRAFFIC BEARING DROP INLET
FOR DOUBLE FRAME AND GRATES

STATE OF
NORTH CAROLINA
DEPT. OF TRANSPORTATION
DIVISION OF HIGHWAYS
RALEIGH, N.C.

ENGLISH STANDARD DRAWING FOR
BRICK MANHOLE
12" THRU 36" PIPE

SHEET 1 OF 1
840.51

GENERAL NOTES:

MORTAR JOINTS ½" ± ⅛" THICK.

ALL EXPOSED JOINTS SHALL BE CONCAVE TOOLED.

CLASS "B" CONCRETE TO BE USED.

FORMS ARE TO BE USED FOR THE CONSTRUCTION OF THE BASE SLAB.

JUMBO BRICK WILL BE PERMITTED. CONCRETE BRICK OR 4" SOLID CONCRETE BLOCKS MAY BE USED IN LIEU OF CLAY BRICK.

IF REINFORCED CONCRETE PIPE IS SET IN BASE SLAB OF BOX, ADD TO BASE AS SHOWN IN STD. NO. 840.00.

WHERE THE MANHOLE IS EXPOSED TO ROAD TRAFFIC, THE TOP OF THE MANHOLE IS TO BE FLUSH WITH THE GROUND. AT OTHER LOCATIONS IT SHOULD BE A MINIMUM OF 9" ABOVE THE GROUND.

MANHOLES OVER 3'-6" IN DEPTH SHALL BE PROVIDED WTH STEPS 1'-2" ON CENTERS. STEPS SHALL BE IN ACCORDANCE WITH STD. NO. 840.66.

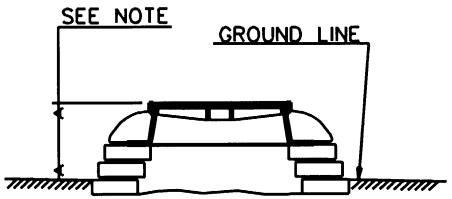

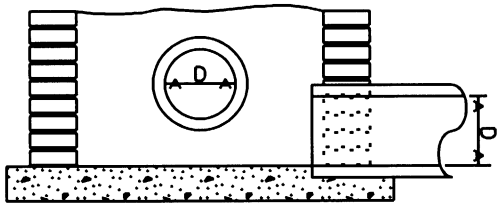

PART SECTION Y-Y

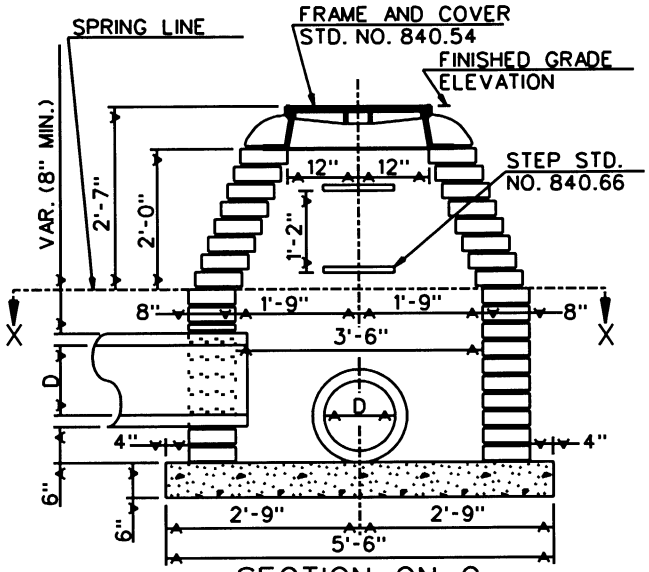

SECTION ON ℄

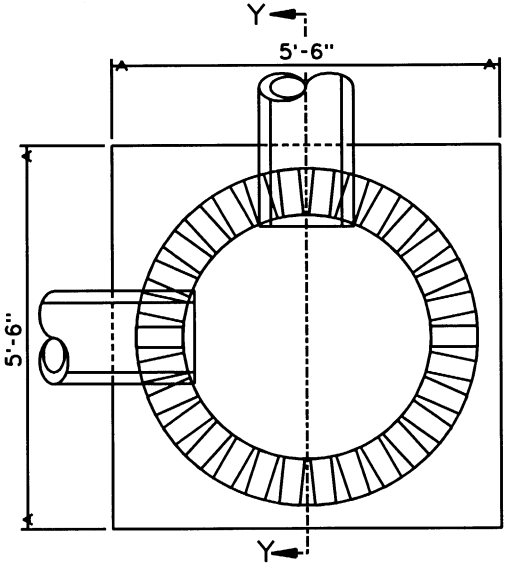

SECTION X-X

MINIMUM DIMENSIONS AND QUANTITIES FOR MANHOLE					
PIPE DIM.	CU. YDS. CONCRETE	TOTAL BRICK MASONRY CU. YDS.	CU. YDS. BRICK MASONRY PER FT. HT.	DEDUCTIONS FOR ONE PIPE (CU.YD.)	
D	BASE	ABOVE S-L	BELOW S-L	C.M.	R.C.
12"	0.560	0.530	0.323	0.020	0.032
15"	0.560	0.530	0.323	0.031	0.047
18"	0.560	0.530	0.323	0.044	0.065
24"	0.560	0.530	0.323	0.078	0.113
30"	0.560	0.530	0.323	0.122	0.170
36"	0.560	0.530	0.323	0.176	0.238

STATE OF
NORTH CAROLINA
DEPT. OF TRANSPORTATION
DIVISION OF HIGHWAYS
RALEIGH, N.C.

ENGLISH STANDARD DRAWING FOR
BRICK MANHOLE
12" THRU 36" PIPE

SHEET 1 OF 1
840.51

STATE OF
NORTH CAROLINA
DEPT. OF TRANSPORTATION
DIVISION OF HIGHWAYS
RALEIGH, N.C.

ENGLISH STANDARD DRAWING FOR
MANHOLE FRAME AND COVER

SHEET 1 OF 1
840.54

SOLID COVER SHOWN PERFORATED. PERFORATED AVAILABLE IF SPECIFIED.
COVER SHALL STATE USE OF SYSTEM
(I.E.: SEWER, STORM DRAIN, ELECTRICAL)

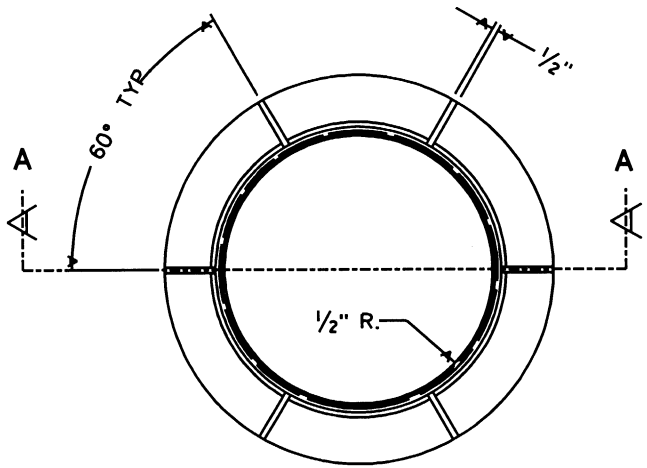

PLAN OF FRAME

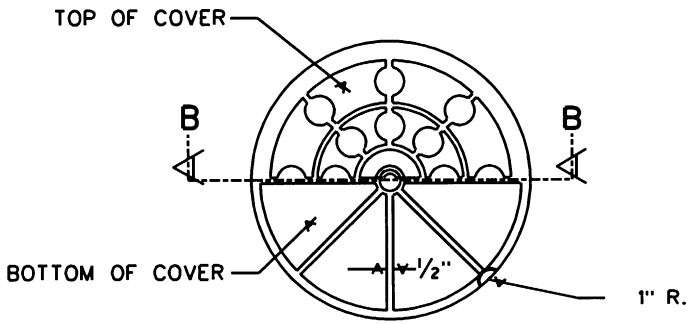

PLAN OF COVER

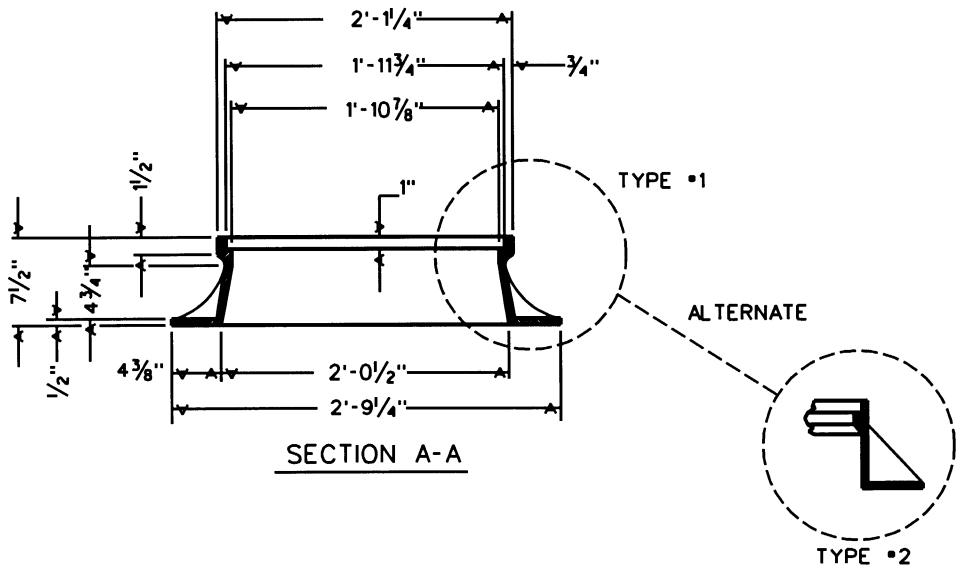

SECTION A-A

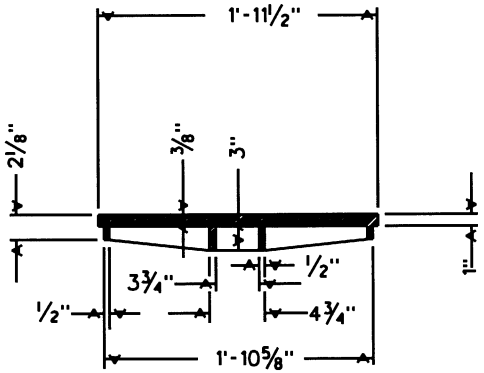

SECTION B-B

MINIMUM WEIGHTS - LBS.
FRAME - 180
COVER - 120
TOTAL - 300

SPECIFICATION
CLASS 30 IRON MEETING
ASTM A-48

STATE OF
NORTH CAROLINA
DEPT. OF TRANSPORTATION
DIVISION OF HIGHWAYS
RALEIGH, N.C.

ENGLISH STANDARD DRAWING FOR
MANHOLE FRAME AND COVER

SHEET 1 OF 1
840.54

STATE OF NORTH CAROLINA
DEPT. OF TRANSPORTATION
DIVISION OF HIGHWAYS
RALEIGH, N.C.

ENGLISH STANDARD DRAWING FOR
TRAFFIC BEARING PRECAST
DRAINAGE STRUCTURE

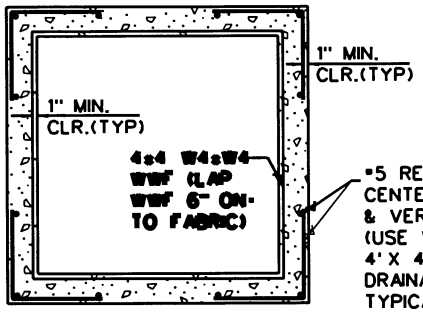

PLAN VIEW OF BASE UNIT

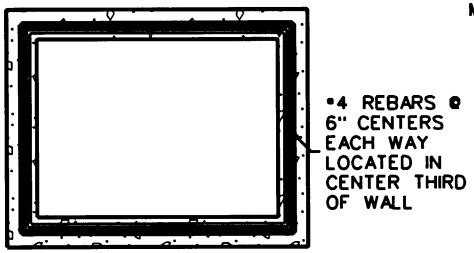

PRECAST RISER PLAN

SECTION VIEWS

OPTIONAL JOINT DETAILS

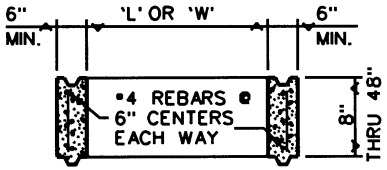

TYPICAL PRECAST
RISER SECTION

GENERAL NOTES:

- THIS PRECAST BOX MAY BE USED FOR THE FOLLOWING STANDARDS: 840.01, 840.02, 840.04, 840.05, 840.06, 840.11, 840.12, 840.14, 840.15, 840.17, 840.18, 840.19, 840.26, 840.27, 840.28, 840.31, 840.32, 840.34, 840.35 AND 840.41.
- PRECAST DRAINAGE STRUCTURES SHALL BE INSTALLED AND PAID FOR IN ACCORDANCE WITH NCDOT STANDARD SPECIFICATION SECTION 840.
- CONCRETE MINIMUM COMPRESSIVE STRENGTH SHALL BE 4000 PSI.
- ALL REINFORCING STEEL SHALL MEET ASTM A615 FOR GRADE 60. WELDED WIRE FABRIC (WWF) SHALL CONFORM TO ASTM A185.
- MAXIMUM DEPTH TO TOP OF BOTTOM SLAB SHALL BE LIMITED TO 15'-0".
- LIFT HOLES OR PINS SHALL BE PLACED IN ACCORDANCE WITH OSHA STANDARD 1926.704.
- STRUCTURES SHALL BE ORIENTATED SO THAT CORNERS WILL NOT BE CUT OR MODIFIED UNLESS ALLOWED BY DETAIL IN PLANS.
- ALL ELEMENTS PRECAST TO MEET ASTM C913.
- FRAME AND GRATE HEIGHT MAY BE ADJUSTED WITH CONCRETE OR BRICK IN ACCORDANCE WITH STANDARD 840.25.
- PRECAST STRUCTURES OVER 4'-0" IN DEPTH SHALL BE PROVIDED WITH STEPS/LADDER INSTALLED IN ACCORDANCE WITH OSHA STANDARD 1910.27 AND AS FIELD CONDITIONS DICTATE.
- WELDED WIRE FABRIC MAY BE SUBSTITUTED FOR REBAR IF THE SAME MIN. AREA OF STEEL IS PROVIDED.
- JOINTS SHALL BE SEALED WITH AN APPROVED SEALANT (SEE SECTION 840 OF NCDOT STANDARD SPECIFICATIONS.
- MAXIMUM STRUCTURE SIZE SHALL BE LIMITED TO INSIDE CLEAR DIMENSIONS OF 6'-0" X 6'-0".
- MINIMUM STRUCTURE SIZE SHALL BE THE OUTSIDE PIPE DIAMETER ON A GIVEN SKEW PLUS 2" OR THE OPENING REQUIRED FOR GRATE AND FRAME WHICHEVER IS GREATER.
- ROUND MANHOLE MAY BE USED IN LIEU OF SQUARE PROVIDED 2 EXTRA #5'S ARE PLACED ON EVERY SIDE NOT ADJACENT TO A WALL. SEE STD. DWG. 840.34 FOR MANHOLE INSTALLATION.

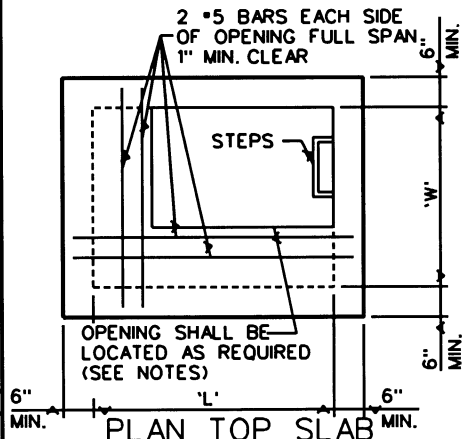

PLAN TOP SLAB

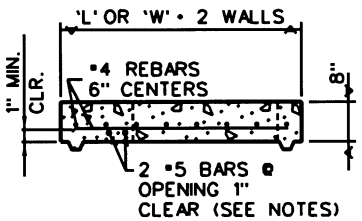

TYPICAL SECTION
TOP SLAB

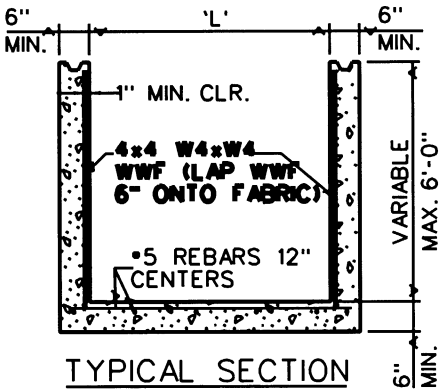

TYPICAL SECTION
OF BASE UNIT

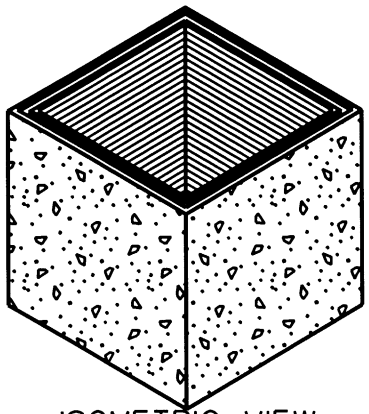

ISOMETRIC VIEW

SHEET 1 OF 1
840.46

STATE OF NORTH CAROLINA
DEPT. OF TRANSPORTATION
DIVISION OF HIGHWAYS
RALEIGH, N.C.

ENGLISH STANDARD DRAWING FOR
TRAFFIC BEARING PRECAST
DRAINAGE STRUCTURE

SHEET 1 OF 1
840.46

STATE OF
NORTH CAROLINA
DEPT. OF TRANSPORTATION
DIVISION OF HIGHWAYS
RALEIGH, N.C.

ENGLISH STANDARD DRAWING FOR
DRAINAGE STRUCTURE STEPS

SHEET 1 OF 1
840.66

NOTES:
ALL STEPS SHALL PROTRUDE 4" FROM INSIDE FACE OF STRUCTURE WALL.
STEPS DIFFERING IN DIMENSIONS, CONFIGURATION OR MATERIALS FROM THOSE SHOWN MAY ALSO BE USED PROVIDED THE CONTRACTOR HAS FURNISHED
THE ENGINEER WITH DETAILS OF THE PROPOSED STEPS AND HAS RECEIVED WRITTEN APPROVAL FROM THE ENGINEER FOR THE USE OF SUCH STEPS.

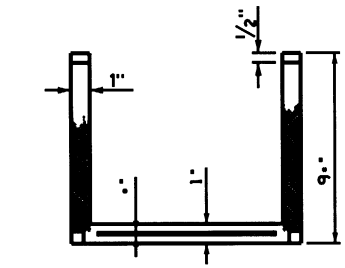

PLAN

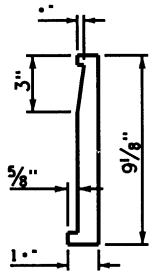

SIDE ELEVATION

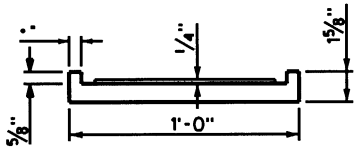

ELEVATION

CAST IRON

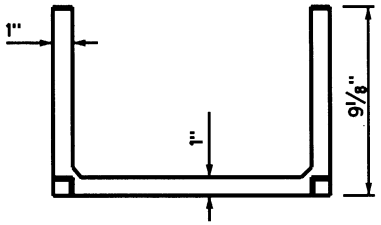

PLAN

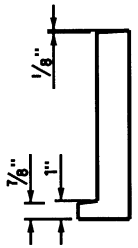

SIDE ELEVATION

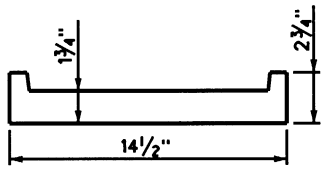

ELEVATION

CAST IRON

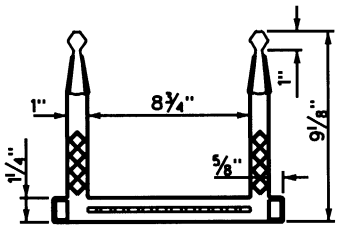

PLAN

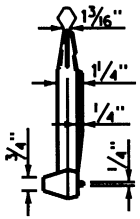

SIDE ELEVATION
COMPOSITE

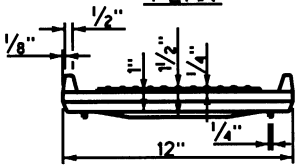

ELEVATION

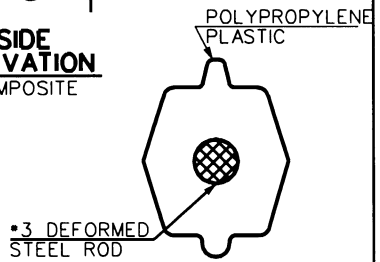

SECTION A-A

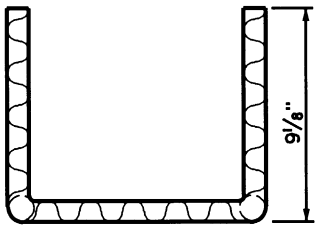

PLAN

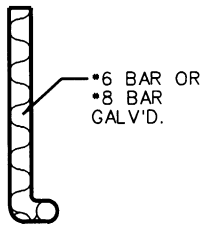

SIDE ELEVATION

REINFORCING STEEL

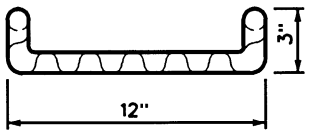

ELEVATION

NOTE:
NOT TO BE USED IN SANITARY SEWER MANHOLES.

STATE OF
NORTH CAROLINA
DEPT. OF TRANSPORTATION
DIVISION OF HIGHWAYS
RALEIGH, N.C.

ENGLISH STANDARD DRAWING FOR
DRAINAGE STRUCTURE STEPS

SHEET 1 OF 1
840.66

STATE OF
NORTH CAROLINA
DEPT. OF TRANSPORTATION
DIVISION OF HIGHWAYS
RALEIGH, N.C.

ENGLISH STANDARD DRAWING FOR
CONCRETE AND BRICK PIPE PLUG

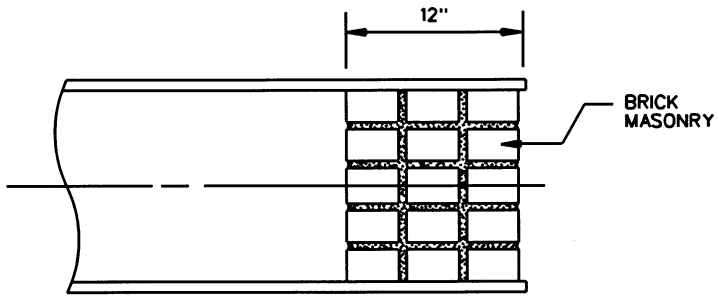

SECTION OF MASONRY
PIPE PLUG

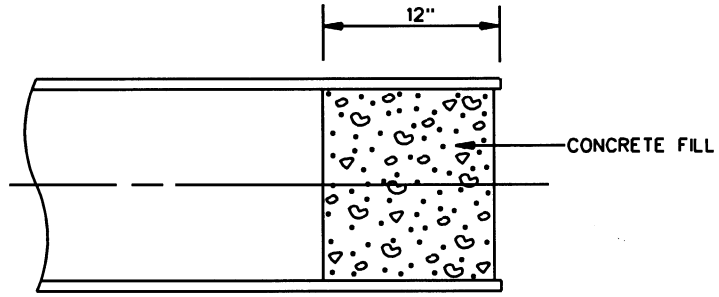

SECTION OF CONCRETE
PIPE PLUG

QUANTITIES	
PIPE SIZE	CUBIC YARDS
12"	0.029
15"	0.045
18"	0.065
24"	0.116
30"	0.182
36"	0.262
42"	0.356
48"	0.465
54"	0.589
60"	0.727
66"	0.880

NOTE:

EITHER BRICK MASONRY OR CONCRETE MAY BE USED.

CONCRETE BRICK MAY BE USED IN LIEU OF CLAY BRICK. JUMBO BRICK WILL BE PERMITTED.

NOTE:

PAY LIMITS (C.Y.) FOR PIPE PLUGS SHALL BE 12" IN THICKNESS ONLY.

SHEET 1 OF 1
840.71

STATE OF
NORTH CAROLINA
DEPT. OF TRANSPORTATION
DIVISION OF HIGHWAYS
RALEIGH, N.C.

ENGLISH STANDARD DRAWING FOR
CONCRETE AND BRICK PIPE PLUG

SHEET 1 OF 1
840.71

STATE OF
NORTH CAROLINA
DEPT. OF TRANSPORTATION
DIVISION OF HIGHWAYS
RALEIGH, N.C.

ENGLISH STANDARD DRAWING FOR

PIPE COLLAR

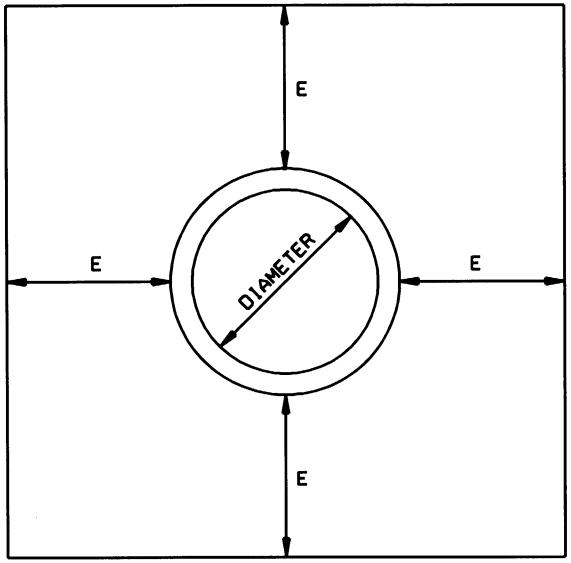

ELEVATION

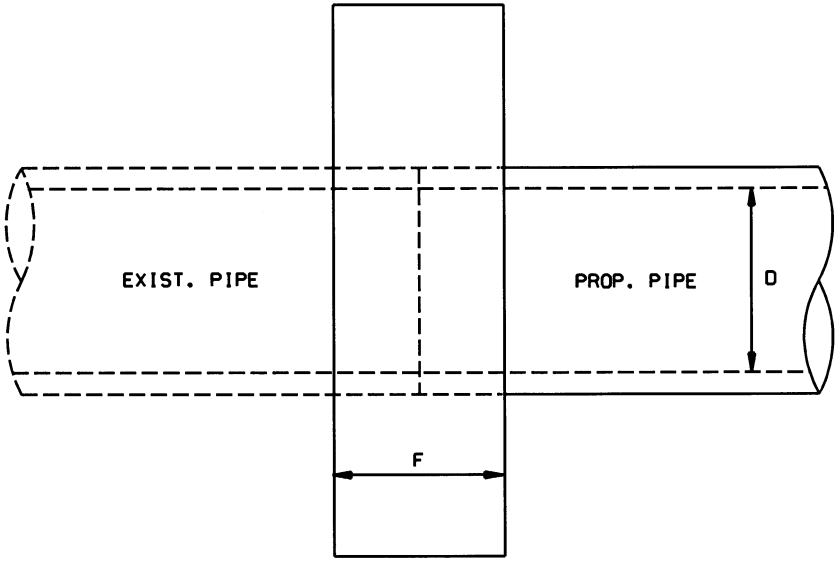

SIDE ELEVATION

GENERAL NOTES:

USE PIPE COLLAR FOR EXTENDING EXISTING CONCRETE PIPE CULVERTS AT LOCATIONS SHOWN ON PLANS OR AS DIRECTED BY THE ENGINEER. THIS INCLUDES EXTENDING EXISTING PIPES WITH PIPES WITH PIPES OF DIFFERENT MATERIALS.

THE PIPE COLLAR SHALL BE CONSTRUCTED OF CLASS "B" OR BETTER CONCRETE.

ALL REQUIREMENTS OF SECTION 840 OF THE STANDARD SPECIFICATIONS SHALL BE OBSERVED.

* USE 12 INCH DIAMETER VALUES FOR PIPE DIAMETERS LESS THAN 12 INCH.

D	E	F	CU. YD.
12"	12"	12"	0.3528
15"	12"	12"	0.3990
18"	12"	12"	0.4465
24"	12"	12"	0.5526
30"	12"	12"	0.6560
36"	12"	12"	0.7640
42"	12"	12"	0.8856
48"	12"	12"	1.0126
54"	18"	18"	2.5793
60"	18"	18"	2.8506
66"	18"	18"	3.1307
72"	18"	18"	3.4176

SHEET 1 OF 1
840.72

STATE OF
NORTH CAROLINA
DEPT. OF TRANSPORTATION
DIVISION OF HIGHWAYS
RALEIGH, N.C.

ENGLISH STANDARD DRAWING FOR
PIPE COLLAR

SHEET 1 OF 1
840.72

STATE OF NORTH CAROLINA
DEPT. OF TRANSPORTATION
DIVISION OF HIGHWAYS
RALEIGH, N.C.

ENGLISH STANDARD DRAWING FOR
CONCRETE CURB, GUTTER
AND CURB & GUTTER

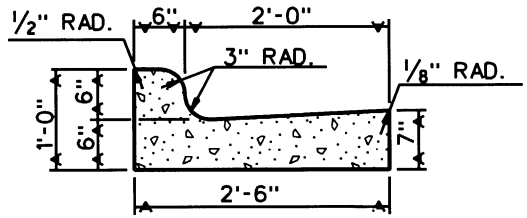

2'-6" CURB AND GUTTER

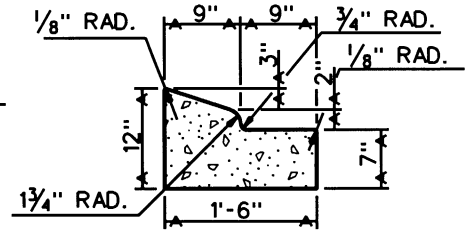

1'-6" CURB AND GUTTER

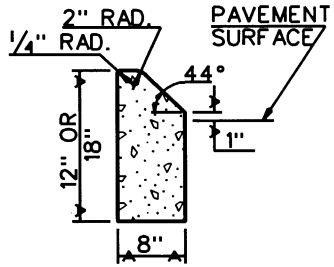

8" X 12" OR 18" CONCRETE CURB

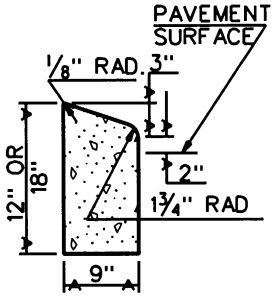

9" X 12" OR 18" CONCRETE CURB

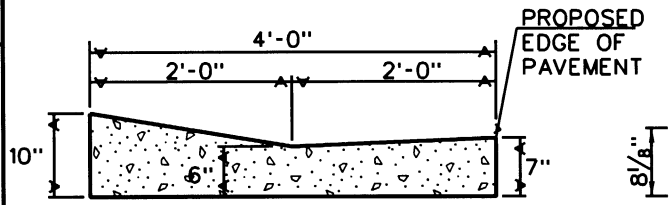

EXPRESSWAY CURB AND GUTTER

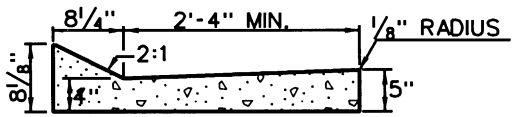

SHOULDER BERM GUTTER

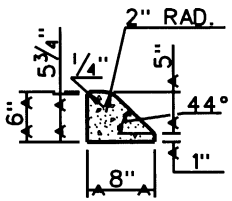

8" X 6" MEDIAN CURB

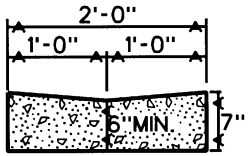

VALLEY GUTTER

SECTION VIEW OF CURBS OR CURBS AND GUTTERS

GENERAL NOTES:
- CONTRACTION JOINTS SHALL BE PLACED AT 10' INTERVALS, EXCEPT THAT A 15' SPACING MAY BE USED WHEN A MACHINE IS USED OR WHEN SATISFACTORY SUPPORT FOR THE FACE FORM CAN BE OBTAINED WITHOUT THE USE OF TEMPLATES AT 10' INTERVALS.
- JOINT SPACING MAY BE ALTERED IF REQUIRED BY THE ENGINEER.
- CONTRACTION JOINTS MAY BE INSTALLED WITH THE USE OF TEMPLATES OR FORMED BY OTHER APPROVED METHODS. NON-TEMPLATE FORMED JOINTS SHALL BE A MIN. OF 1 1/2" DEEP.
- ALL CONSTRUCTION JOINTS, EXCEPT IN 8"x6" MEDIAN CURB, SHALL BE FILLED WITH JOINT FILLER AND SEALER.
- EXPANSION JOINTS SHALL BE SPACED AT 90' INTERVALS AND ADJACENT TO ALL RIGID OBJECTS.

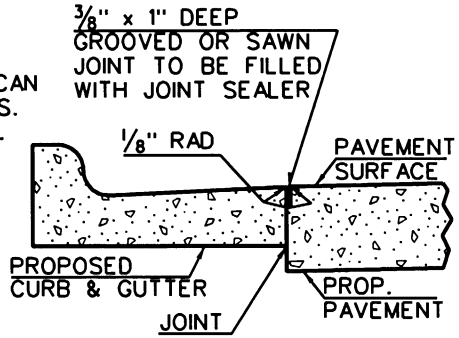

LONGITUDINAL JOINT

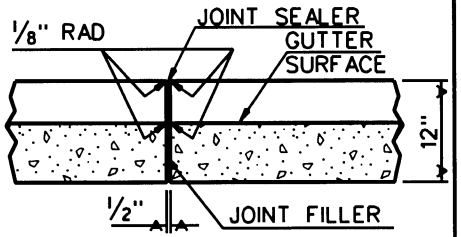

TRANSVERSE EXPANSION JOINT IN CURB AND GUTTER

SECTION VIEW OF JOINTS

STATE OF NORTH CAROLINA
DEPT. OF TRANSPORTATION
DIVISION OF HIGHWAYS
RALEIGH, N.C.

ENGLISH STANDARD DRAWING FOR
CONCRETE CURB, GUTTER
AND CURB & GUTTER

SHEET 1 OF 3
846.01

SHEET 1 OF 3
846.01

STATE OF
NORTH CAROLINA
DEPT. OF TRANSPORTATION
DIVISION OF HIGHWAYS
RALEIGH, N.C.

ENGLISH STANDARD DRAWING FOR
CONCRETE CURB, GUTTER
AND CURB & GUTTER

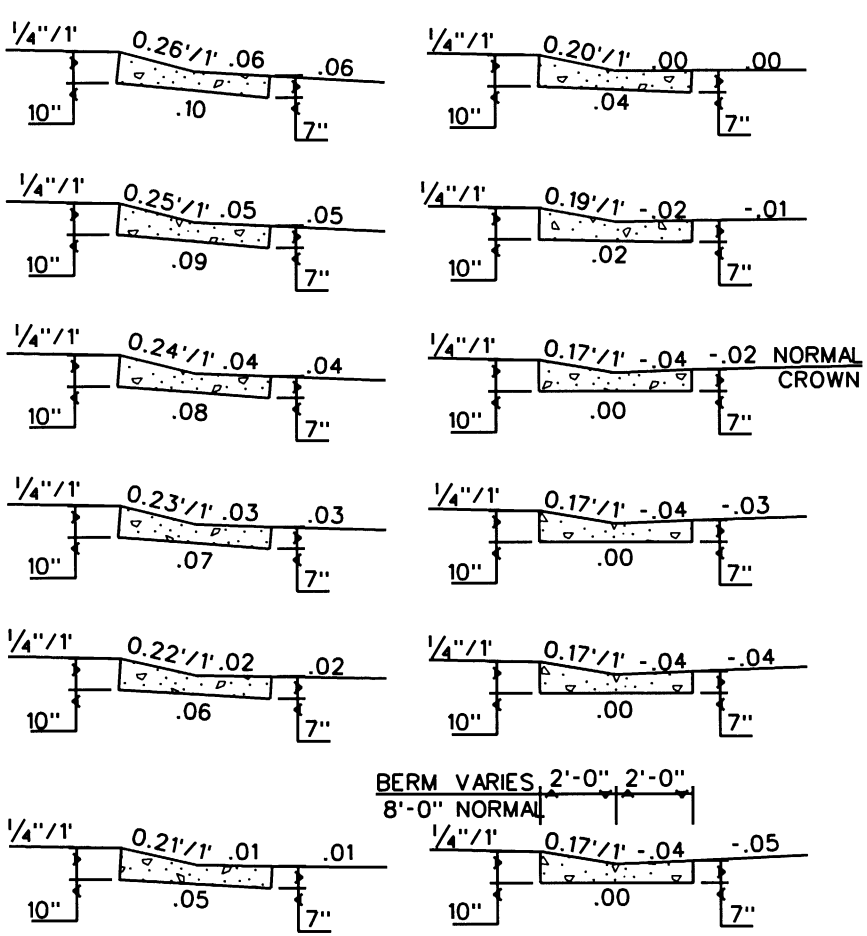

SECTION VIEWS OF
EXPRESSWAY GUTTER IN SUPER ELEVATION

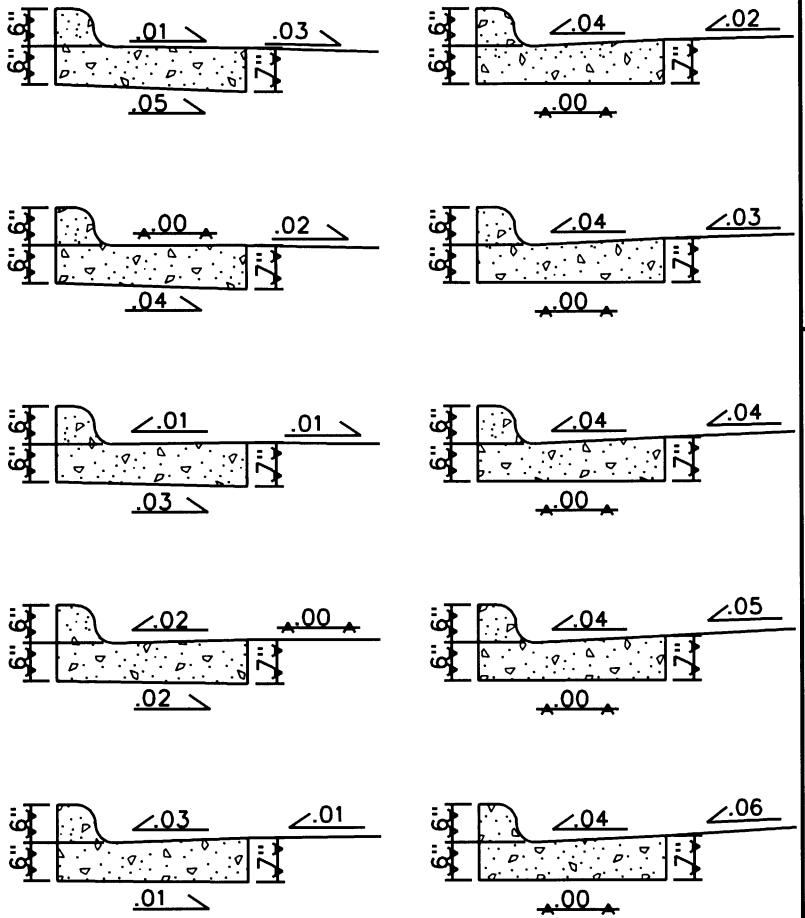

SECTION VIEWS OF
2'-6" CURB AND GUTTER SUPERELEVATION RATES

STATE OF
NORTH CAROLINA
DEPT. OF TRANSPORTATION
DIVISION OF HIGHWAYS
RALEIGH, N.C.

ENGLISH STANDARD DRAWING FOR
CONCRETE CURB, GUTTER
AND CURB & GUTTER

SHEET 2 OF 3
846.01

STATE OF NORTH CAROLINA
DEPT. OF TRANSPORTATION
DIVISION OF HIGHWAYS
RALEIGH, N.C.

ENGLISH STANDARD DRAWING FOR
CONCRETE CURB, GUTTER AND CURB & GUTTER

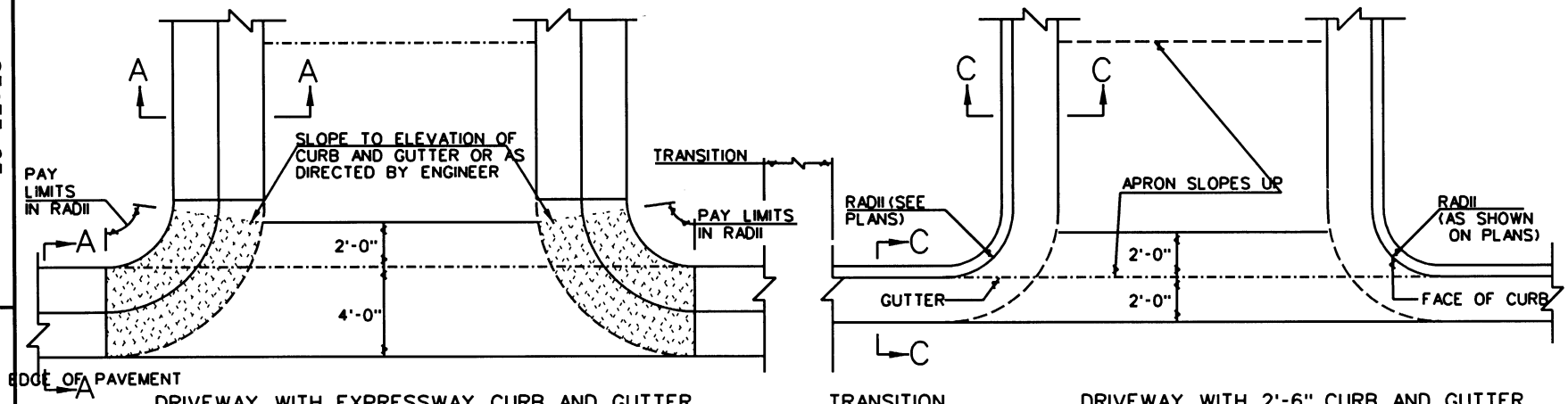

DRIVEWAY WITH EXPRESSWAY CURB AND GUTTER — TRANSITION — DRIVEWAY WITH 2'-6" CURB AND GUTTER

PLAN VIEW OF TYPICAL CURB AND GUTTER OCCURENCES

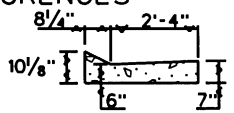

SECTION B-B
SHOULDER BERM GUTTER
(•2" DEPTH)

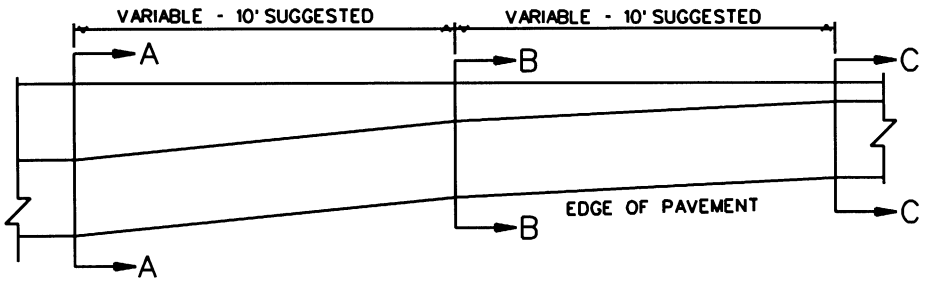

PLAN VIEW OF TRANSITION
EXPRESSWAY GUTTER TO 2'-6" GURB AND GUTTER

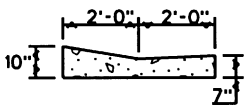

SECTION A-A
EXPRESSWAY GUTTER

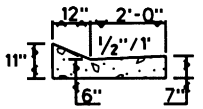

SECTION B-B
TRANSITION GUTTER

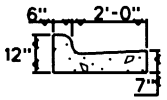

SECTION C-C
2'-6" CURB & GUTTER

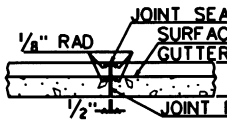

EXPANSION JOINT

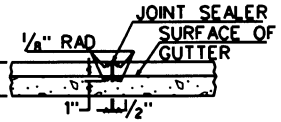

CONTRACTION JOINT

NOTES:
- IN THE TRANSITION FROM 4'-0" CONCRETE EXPRESSWAY GUTTER TO 2'-6" CONCRETE CURB AND GUTTER, PLACE ½" EXPANSION JOINTS AT 25' INTERVALS.
- PLACE GROOVE JOINTS 1" DEEP AT 12'-6" INTERVALS BETWEEN EXPANSION JOINTS.
- THE TOP ½" OF THE EXPANSION JOINTS AND 1" OF CONTRACTION JOINTS SHALL BE FILLED AND SEALED WITH APPROVED JOINT SEALING COMPOUND.

STATE OF NORTH CAROLINA
DEPT. OF TRANSPORTATION
DIVISION OF HIGHWAYS
RALEIGH, N.C.

ENGLISH STANDARD DRAWING FOR
CONCRETE CURB, GUTTER AND CURB & GUTTER

STATE OF
NORTH CAROLINA
DEPT. OF TRANSPORTATION
DIVISION OF HIGHWAYS
RALEIGH, N.C.

ENGLISH STANDARD DRAWING FOR
CONCRETE SIDEWALK

SHEET 1 OF 1
848.01

NOTES:

STANDARD SIDEWALK WIDTH SHALL BE 5' AND THICKNESS (T) SHALL BE 4" UNLESS OTHERWISE DENOTED ON PLANS.

A GROOVE JOINT 1" DEEP WITH 1/8" RADII SHALL BE REQUIRED IN THE CONCRETE SIDEWALK AT 5' INTERVALS. ONE 1/2" EXPANSION JOINT WILL BE REQUIRED AT 50' INTERVALS. A 1/2" EXPANSION JOINT WILL BE REQUIRED WHERE THE SIDEWALK JOINS ANY RIGID STRUCTURE.

SEE STD. DWG. 848.05 FOR WHEELCHAIR RAMP LOCATION REQUIREMENTS AND CONSTRUCTION GUIDELINES.

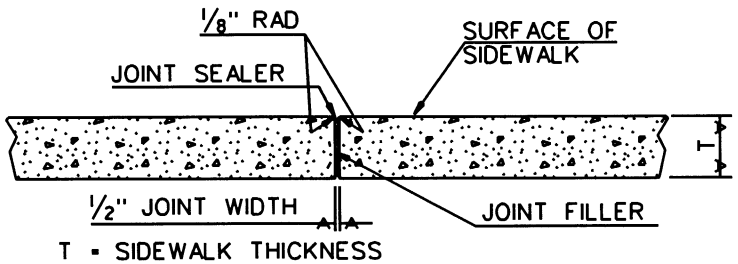

TRANSVERSE EXPANSION JOINT IN SIDEWALK

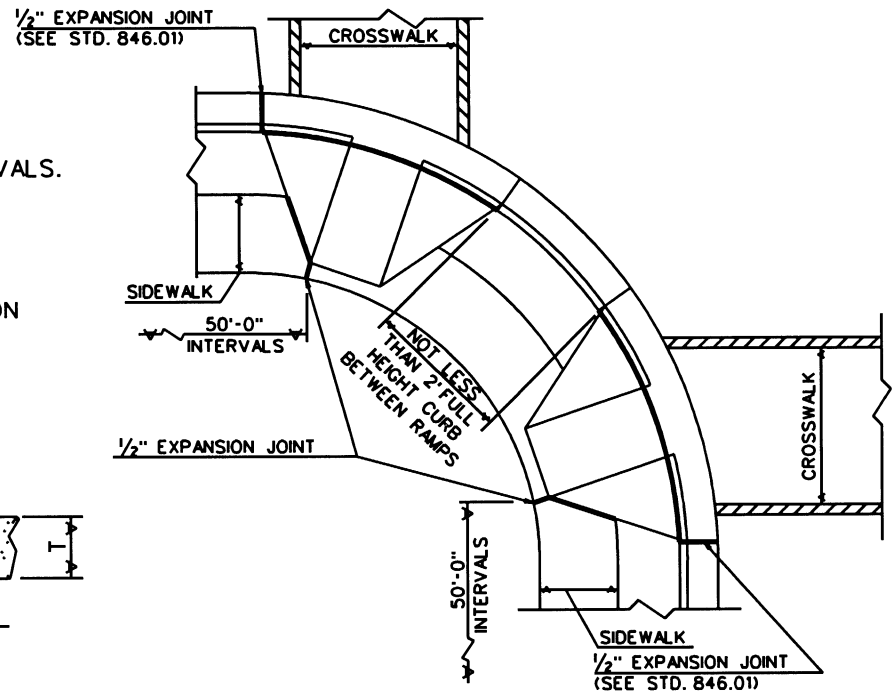

PLAN VIEW

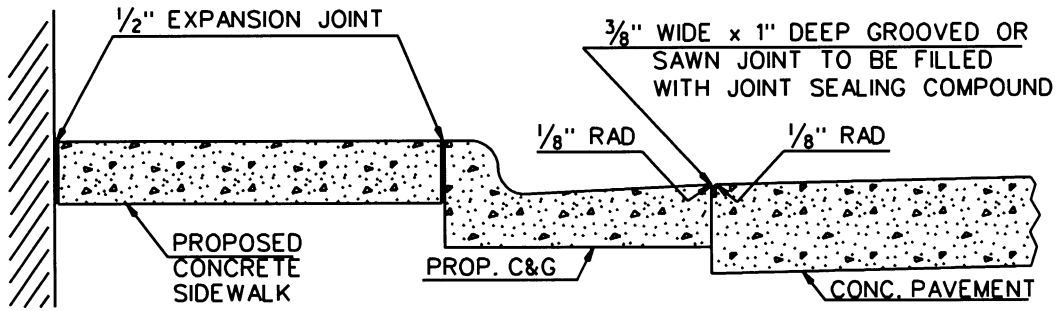

DETAILS SHOWING JOINTS IN CONCRETE SIDEWALK

STATE OF
NORTH CAROLINA
DEPT. OF TRANSPORTATION
DIVISION OF HIGHWAYS
RALEIGH, N.C.

ENGLISH STANDARD DRAWING FOR
CONCRETE SIDEWALK

SHEET 1 OF 1
848.01

STATE OF
NORTH CAROLINA
DEPT. OF TRANSPORTATION
DIVISION OF HIGHWAYS
RALEIGH, N.C.

ENGLISH STANDARD DRAWING FOR
DRIVEWAY TURNOUT
RADIUS TYPE

SHEET 1 OF 1
848.02

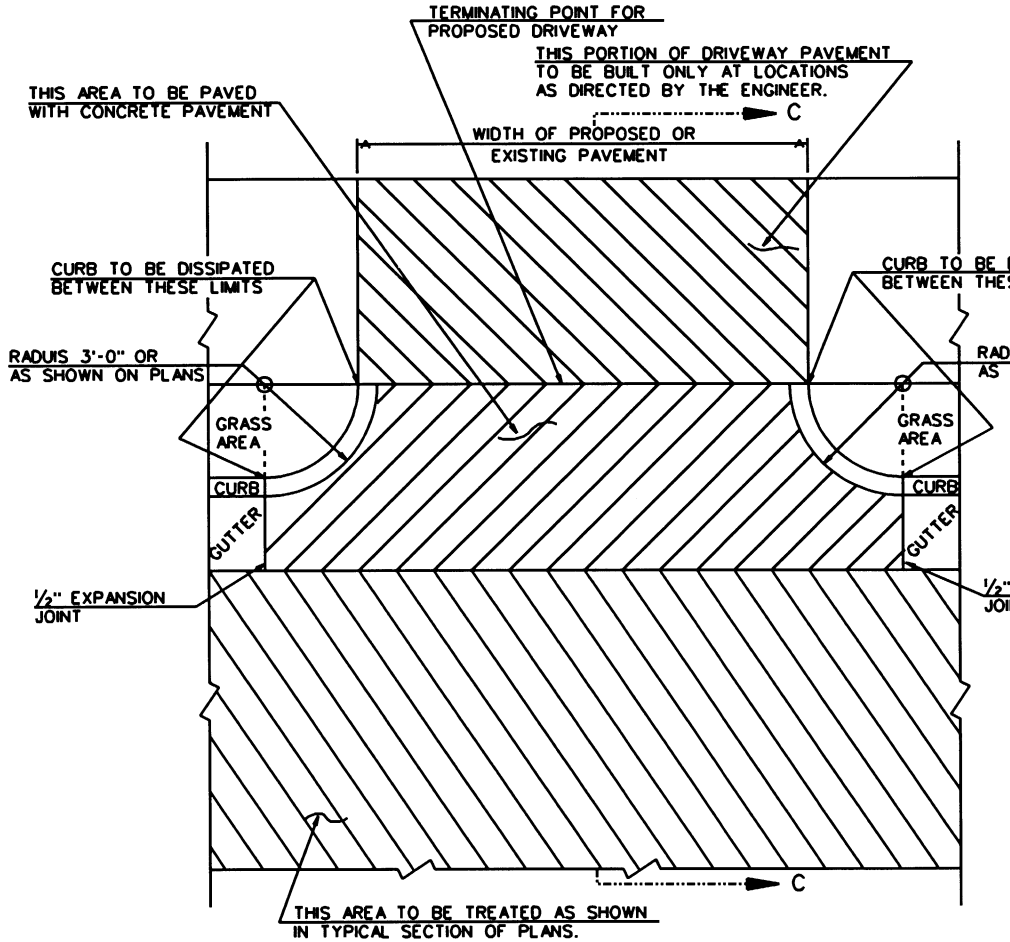

PARTIAL PLAN OF PAVED DRIVEWAY TURNOUT
TO BE USED ON PROPOSED OR EXISTING INTERSECTING DRIVEWAYS

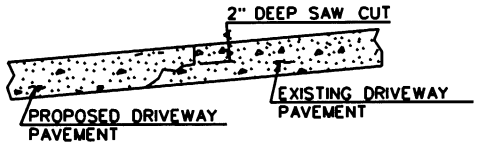

METHOD OF TIE IN

WHEN EXISTING DRIVEWAY PAVEMENT IS CONCRETE, A SAW CUT 2" DEEP SHALL BE REQUIRED AT THE POINT OF TIE IN WITH EXISTING DRIVEWAY GRADE SAWN JOINT TO BE PERPENDICULAR TO EDGE OF EXISTING DRIVEWAY PAVEMENT.

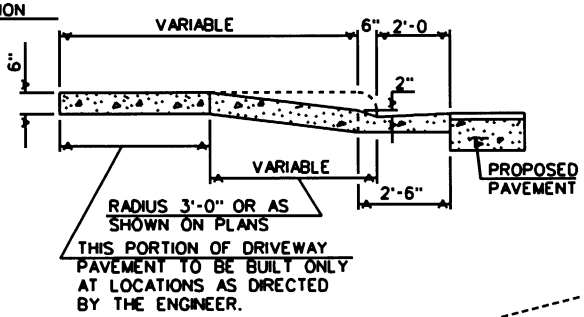

SECTION C-C

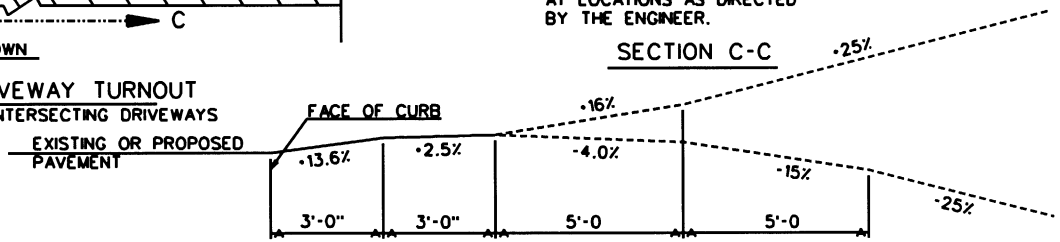

ALL GRADES SHOWN ARE MAXIMUMS

DRIVEWAY TURNOUT GRADES

STATE OF
NORTH CAROLINA
DEPT. OF TRANSPORTATION
DIVISION OF HIGHWAYS
RALEIGH, N.C.

ENGLISH STANDARD DRAWING FOR
DRIVEWAY TURNOUT
RADIUS TYPE

SHEET 1 OF 1
848.02

STATE OF
NORTH CAROLINA
DEPT. OF TRANSPORTATION
DIVISION OF HIGHWAYS
RALEIGH, N.C.

ENGLISH STANDARD DRAWING FOR
STREET · TURNOUT

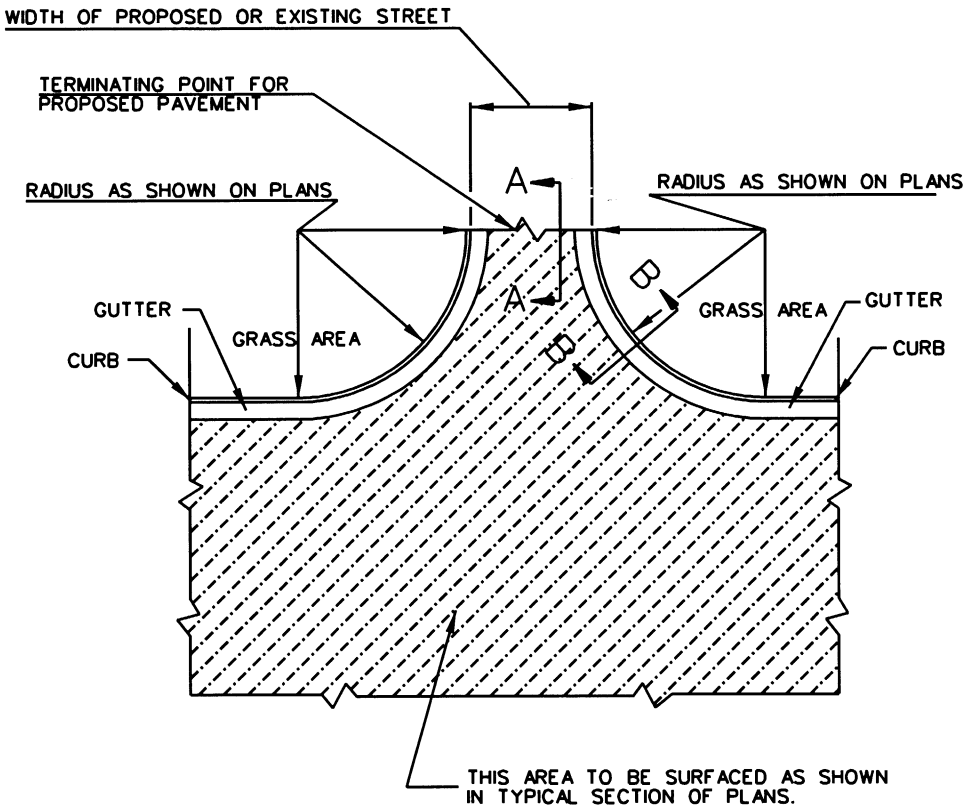

PARTIAL PLAN OF PAVED STREET TURNOUT

TO BE USED ON PROPOSED AND EXISTING STREET INTERSECTIONS OR MAJOR TYPE COMMERICAL ENTRANCES.

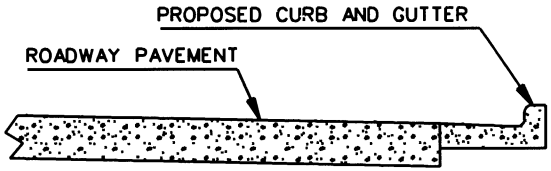

SECTION B-B

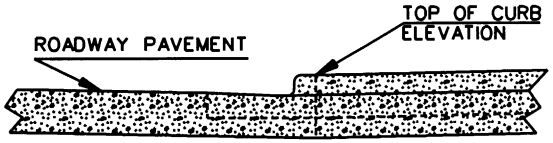

SECTION A-A

SHEET 1 OF 1
848.04

STATE OF
NORTH CAROLINA
DEPT. OF TRANSPORTATION
DIVISION OF HIGHWAYS
RALEIGH, N.C.

ENGLISH STANDARD DRAWING FOR
STREET · TURNOUT

SHEET 1 OF 1
848.04

STATE OF
NORTH CAROLINA
DEPT. OF TRANSPORTATION
DIVISION OF HIGHWAYS
RALEIGH, N.C.

ENGLISH STANDARD DRAWING FOR WHEELCHAIR RAMP

CURB CUT

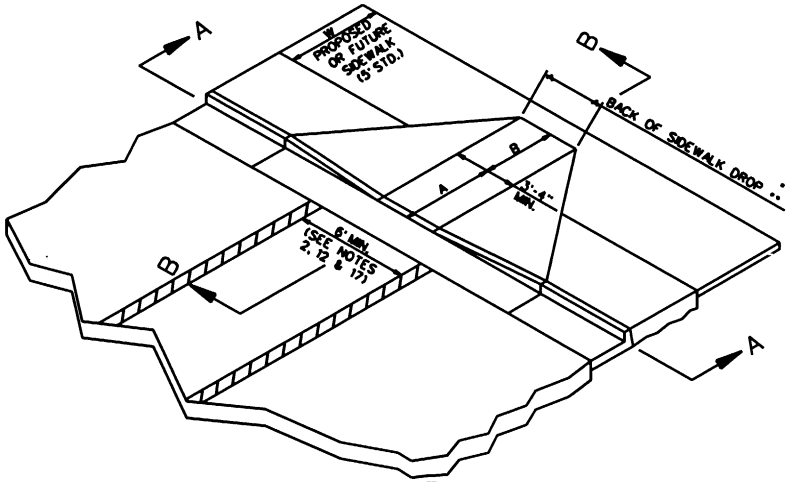

ISOMETRIC VIEW

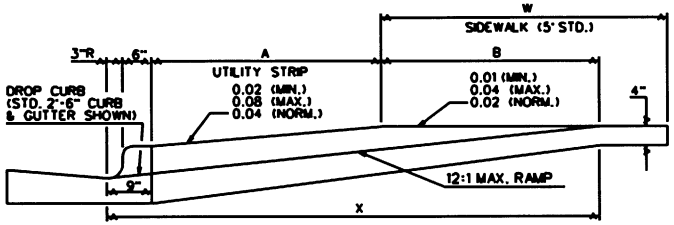

SECTION B-B

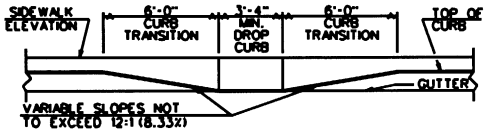

SECTION A-A

W	A	W-A-9"	X	B
5'	0.0'	5.8'	5.8'	5.0'•
6'	0.0'	6.8'	6.8'	6.0'••
7'	0.0'	7.8'	7.3'	6.5'••
8'	0.0'	8.8'	7.3'	6.5'••
5'	2.0'	7.8'	7.8'	5.0'
5'	2.5'	8.3'	8.1'	4.8'
5'	3.0'	8.8'	8.3'	4.4'
5'	3.5'	9.3'	8.4'	4.1'
5'	4.0'	9.8'	8.6'	3.8'
5'	4.5'	10.3'	8.7'	3.4'
5'	5.0'	10.8'	8.9'	3.1'

B = X-(A-9")

B = DISTANCE FROM FRONT EDGE OF SIDEWALK TO BACK POINT OF 12:1 (8.33%) SLOPE.

• BACK OF SIDEWALK DROP REQUIRED FOR ALL SIDEWALK SLOPES.

•• BACK OF SIDEWALK DROP REQUIRED FOR SIDEWALK SLOPES 0.04.

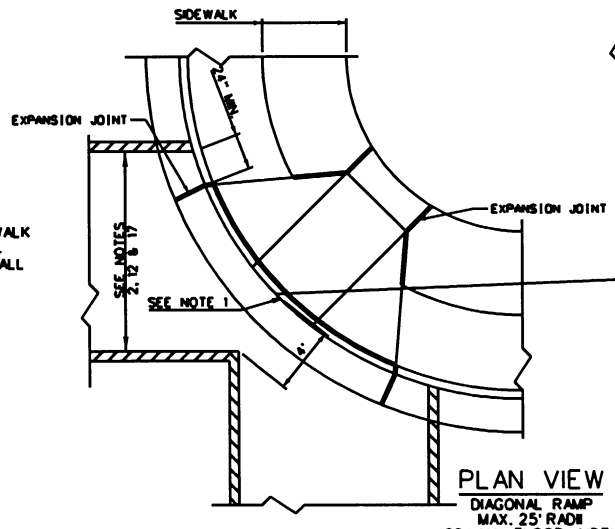

PLAN VIEW

DIAGONAL RAMP
MAX. 25' RADII
(60" MIN. FLOOR WIDTH)
(NOT PERMISSIBLE FOR NEW CONSTRUCTION)

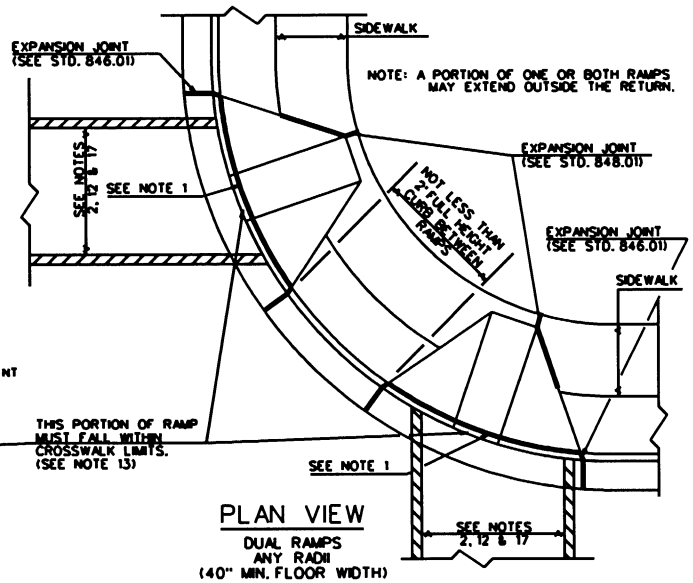

PLAN VIEW

DUAL RAMPS
ANY RADII
(40" MIN. FLOOR WIDTH)

ROADWAY PLAN SYMBOL
CCFR
CURB CUT FOR FUTURE RAMP

ROADWAY PLAN SYMBOL
WCR
FOR PROPOSED WHEELCHAIR RAMP

STATE OF
NORTH CAROLINA
DEPT. OF TRANSPORTATION
DIVISION OF HIGHWAYS
RALEIGH, N.C.

ENGLISH STANDARD DRAWING FOR
WHEELCHAIR RAMP
CURB CUT

STATE OF
NORTH CAROLINA
DEPT. OF TRANSPORTATION
DIVISION OF HIGHWAYS
RALEIGH, N.C.

ENGLISH STANDARD DRAWING FOR
WHEELCHAIR RAMP
CURB CUT

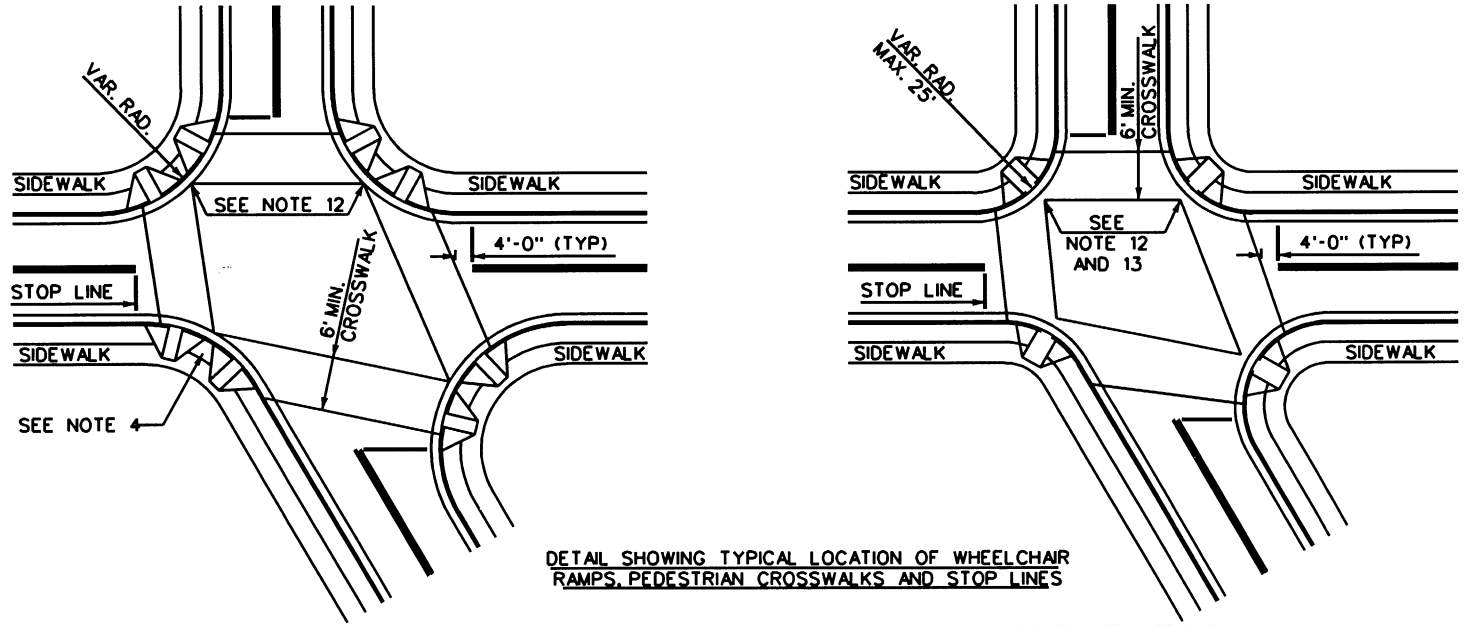

DETAIL SHOWING TYPICAL LOCATION OF WHEELCHAIR RAMPS, PEDESTRIAN CROSSWALKS AND STOP LINES

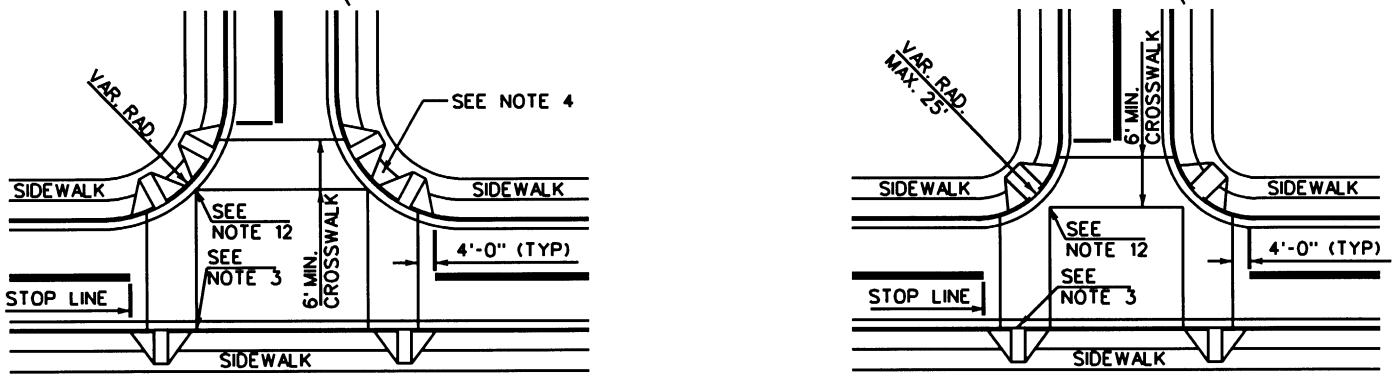

DETAIL SHOWING TYPICAL LOCATION OF WHEELCHAIR RAMPS, PEDESTRIAN CROSSWALKS AND STOP LINES FOR TEE INTERSECTIONS

PROPOSED WHEELCHAIR RAMP
PROPOSED OR FUTURE SIDEWALK

ALLOWABLE LOCATIONS

DUAL RAMP RADII.....ANY
DIAGONAL RAMP RADII...MAX. 25'
(DIAGONAL RAMP IS NOT PERMISSIBLE FOR NEW CONSTRUCTION)

STATE OF
NORTH CAROLINA
DEPT. OF TRANSPORTATION
DIVISION OF HIGHWAYS
RALEIGH, N.C.

ENGLISH STANDARD DRAWING FOR
WHEELCHAIR RAMP
CURB CUT

STATE OF
NORTH CAROLINA
DEPT. OF TRANSPORTATION
DIVISION OF HIGHWAYS
RALEIGH, N.C.

ENGLISH STANDARD DRAWING FOR
WHEELCHAIR RAMP
CURB CUT

SHEET 3 OF 3
848.05

NOTES:

1. THE WALKING SURFACE SHALL BE SLIP RESISTANT AND A CONTRASTING COLOR TO THE SIDEWALK.

2. CROSSWALK WIDTHS AND CONFIGURATION VARY BUT MUST CONFORM TO TRAFFIC DESIGN STANDARDS.

3. NORTH CAROLINA GENERAL STATUTE 136-44.14 REQUIRES THAT ALL STREET CURBS BEING CONSTRUCTED OR RECONSTRUCTED FOR MAINTENANCE PROCEDURES, TRAFFIC OPERATIONS, REPAIRS, CORRECTION OF UTILTIES OR ALTERED FOR ANY REASON AFTER SEPTEMBER 1, 1973 SHALL PROVIDE WHEELCHAIR RAMPS FOR THE PHYSICALLY DISABLED AT ALL INTERSECTIONS WHERE BOTH CURB AND GUTTER AND SIDEWALKS ARE PROVIDED AND AT OTHER POINTS OF PEDESTRIAN FLOW.

   IN ADDITION, SECTION 228 OF THE 1973 FEDERAL AID HIGHWAY SAFETY ACT REQUIRES PROVISION OF CURB RAMPS ON ANY CURB CONSTRUCTION AFTER JULY 1,1976 WHETHER A SIDEWALK IS PROPOSED INITIALLY OR IS PLANNED FOR A FUTURE DATE.

   THE AMERICANS WITH DISABILITIES ACT (ADA) OF 1990 EXTENDS TO INDIVIDUALS WITH DISABILITIES. COMPREHENSIVE CIVIL RIGHTS PROTECTIONS SIMILIAR TO THOSE PROVIDED TO PERSONS ON THE BASIS OF RACE, SEX, NATIONAL ORIGIN AND RELIGION UNDER THE CIVIL RIGHTS ACT OF 1964. THESE CURB RAMPS HAVE BEEN DESIGNED TO COMPLY WITH TITLE III OF THE ADA BECOMING EFFECTIVE JANUARY 26, 1992. THE ADA REQUIREMENTS FOR DETECTABLE WARNINGS ARE SUSPENDED EFFECTIVE MAY 12, 1994.

4. WHEELCHAIR RAMPS SHALL BE PROVIDED AT LOCATIONS AS SHOWN ON THE PLANS OR AS DIRECTED BY THE ENGINEER. WHEELCHAIR RAMPS SHALL BE LOCATED AS DIRECTED BY THE ENGINEER WHERE EXISTING LIGHT POLES, FIRE HYDRANTS, DROP INLETS, ETC. AFFECT PLACEMENT. WHERE TWO RAMPS ARE INSTALLED NOT LESS THAN 2 FEET OF FULL HEIGHT CURB SHALL BE PLACED BETWEEN THE RAMPS. DUAL RAMPS SHOULD BE PLACED AS NEAR PERPENDICULAR TO THE TRAVEL LANE BEING CROSSED AS POSSIBLE.

5. ALL 4" CONCRETE USED FOR CONSTRUCTION OF WHEELCHAIR RAMPS WILL BE PAID FOR AS CONCRETE WHEELCHAIR RAMPS. (SQ. YDS.)

6. ALL DEPRESSED CURBS AT WHEELCHAIR RAMPS WILL BE PAID FOR AS THE TYPE CURB AND GUTTER USED ADJACENT TO DEPRESSED CURB. (LN. FT.)

7. SUCH PRICES AND PAYMENTS WILL BE CONSIDERED FULL COMPENSATION FOR ALL MATERIALS, LABOR, EQUIPMENT, TOOLS AND INCIDENTALS NECESSARY TO SATISFACTORILY COMPLETE THE WORK.

8. NO SLOPE ON THE WHEELCHAIR RAMP SHALL EXCEED 1"/1' (12:1) IN RELATIONSHIP TO THE GRADE OF THE STREET.

9. THE WIDTH OF THE WHEELCHAIR RAMP SHALL BE 40" (3'-4") OR GREATER FOR DUAL RAMPS AND 60" (5'-0") OR GREATER FOR DIAGONAL RAMPS.

10. USE CLASS "B" CONCRETE WITH A SIDEWALK FINISH IN ORDER TO OBTAIN A ROUGH NON-SKID TYPE SURFACE.

11. A 1/2" EXPANSION JOINT WILL BE REQUIRED WHERE THE CONCRETE WHEELCHAIR RAMP JOINS THE CURB AND AS SHOWN ON STD. DWG. 848.01.

12. THE INSIDE PEDESTRIAN CROSSWALK LINES SHALL BE SET NO CLOSER IN THE INTERSECTION THAN WOULD BE ESTABLISHED BY BISECTING THE INTERSECTION RADII, WITH ALLOWANCE OF A 4' CLEAR ZONE IN THE VEHICULAR TRAVELWAY WHEN ONE RAMP IS INSTALLED. (SEE NOTE 17)

13. THE CURB CUT AND THE PEDESTRIAN CROSSWALK LINES SHALL BE COORDINATED SO THE FLOOR OF THE WHEELCHAIR RAMP WILL FALL WITHIN THE PEDESTRIAN CROSSWALK LINES. DIAGONAL RAMPS WITH FLARED SIDES SHALL BE PLACED SO 24" OF FULL HEIGHT CURB FALLS WIHTIN THE CROSSWALK MARKINGS ON EACH SIDE OF THE FLARES.

14. THE MINIMUM WIDTH OF THE PEDESTRIAN CROSSWALK SHALL BE 6 FEET. A CROSSWALK WIDTH OF 10 FEET OR GREATER IS DESIRABLE.

15. STOP LINES, NORMALLY PERPENDICULAR TO THE LANE LINES, SHALL BE USED WHERE IT IS IMPORTANT TO INDICATE THE POINT BEHIND WHICH VEHICLES ARE REQUIRED TO STOP IN COMPLIANCE WITH A TRAFFIC SIGNAL, STOP SIGN OR OTHER LEGAL REQUIREMENT. AN UNUSUAL APPROACH SKEW MAY REQUIRE THE PLACEMENT OF THE STOP LINE TO BE PARALLEL TO THE INTERSECTING ROADWAY.

16. PARKING SHALL BE ELIMINATED A MINIMUM OF 20 FEET BACK OF PEDESTRIAN CROSSWALK.

17. ALL PAVEMENT MARKINGS SHALL BE IN ACCORDANCE WITH THE LATEST EDITION OF THE MANUAL OF UNIFORM TRAFFIC CONTROL DEVICES (MUTCD) PUBLISHED BY THE FEDERAL HIGHWAY ADMINISTRATION AND THE NORTH CAROLINA SUPPLEMENT TO THE MUTCD. ALL PAVEMENT MARKINGS SHALL BE DONE BY OTHERS.

STATE OF
NORTH CAROLINA
DEPT. OF TRANSPORTATION
DIVISION OF HIGHWAYS
RALEIGH, N.C.

ENGLISH STANDARD DRAWING FOR
WHEELCHAIR RAMP
CURB CUT

SHEET 3 OF 3
848.05

STATE OF NORTH CAROLINA
DEPT. OF TRANSPORTATION
DIVISION OF HIGHWAYS
RALEIGH, N.C.

ENGLISH STANDARD DRAWING FOR GUARDRAIL PLACEMENT

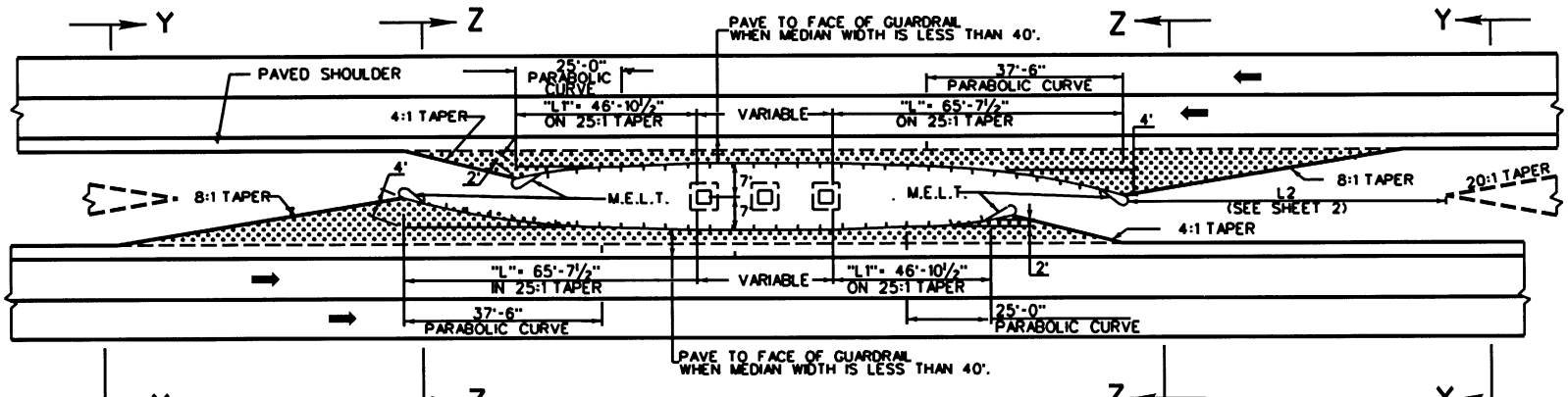

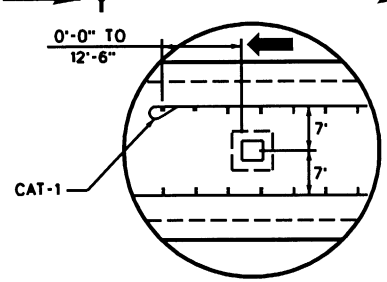

DETAIL - A

SEE NOTE 4

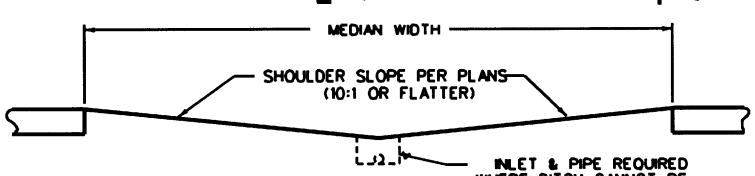

SEC. ZZ

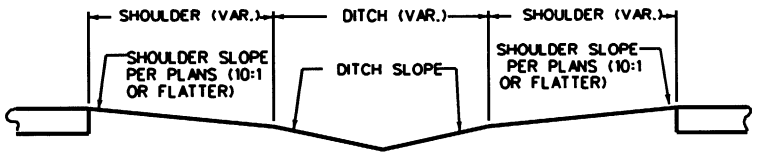

SEC. YY

DETAIL OF GUARDRAIL MEDIAN TREATMENT

NOTES:

1. WHEN OFFSET DISTANCE FROM FACE OF OBSTRUCTION TO FACE OF GUARDRAIL IS BETWEEN 3'-6" AND 5'-6", A 3'-1½" POST SPACING SHALL BEGIN AT A POINT 25' BEFORE REACHING THE OBSTRUCTION AND WILL BE CARRIED THROUGHOUT ITS LENGTH. IF THE OFFSET IS LESS THAN 3'-6" USE CONCRETE BARRIER.
2. GUARDRAIL POST SPACING IS 6'-3" UNLESS NOTED OTHERWISE.
3. THIS DESIGN SHALL BE USED WITH THE FOLLOWING ROADWAY LANE DESIGNS AND MEDIAN WIDTHS:
   - 4 LANE DIVIDED ROADWAY WITH 30' OR GREATER MEDIAN WIDTH
   - 6 LANE OR MORE DIVIDED ROADWAY WITH 36' OR GREATER MEDIAN WIDTH

   MEDIAN WIDTHS LESS THAN THOSE REFERENCED SHALL REQUIRE A DESIGN INCORPORATING IMPACT ATTENUATORS INSTEAD OF STANDARD END TREATMENTS.
4. USE DETAIL "A" FOR TRAILING END GUARDRAIL ON MEDIAN WIDTH OF 60' OR GREATER.
5. THE DESIGN LAYOUT FOR LENGTHS SHOWN ON THIS GUARDRAIL STANDARD ARE MINIMUM DESIGN LENGTHS.

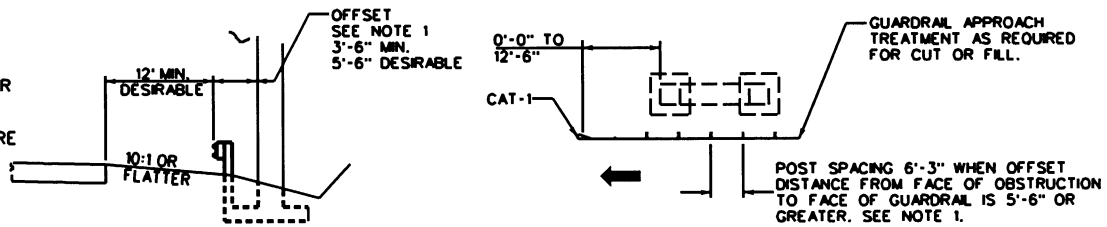

DETAIL OF RIGHT SIDE GUARDRAIL AT UNDERPASS

STATE OF NORTH CAROLINA
DEPT. OF TRANSPORTATION
DIVISION OF HIGHWAYS
RALEIGH, N.C.

ENGLISH STANDARD DRAWING FOR GUARDRAIL PLACEMENT

SHEET 1 OF 12
862.01

d:\idiq\08620101.dgn May. 26, 1999 08:49:30

STATE OF NORTH CAROLINA
DEPT. OF TRANSPORTATION
DIVISION OF HIGHWAYS
RALEIGH, N.C.

ENGLISH STANDARD DRAWING FOR
GUARDRAIL PLACEMENT

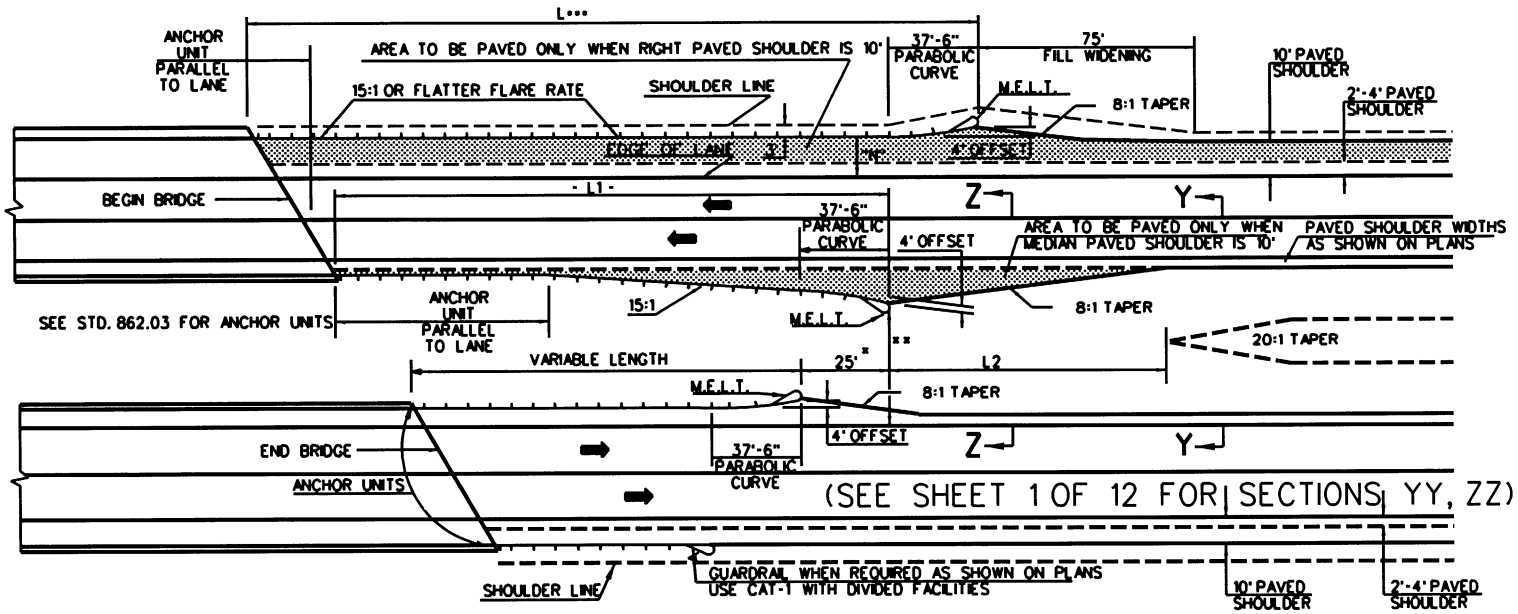

DIMENSIONS FOR LENGTH OF GUARDRAIL APPROACHING DUAL LANE BRIDGES							
MEDIAN WIDTH	-L***			-L1-			-L2- DIM.
	70 MPH	60 MPH	50 MPH	70 MPH	60 MPH	50 MPH	
30'	300'	225'	125'	137'-6"	112'-6"	87'-6"	80'
36'	300'	225'	125'	162'-6"	137'-6"	112'-6"	60'
40' & ABOVE	300'	225'	125'	162'-6"	137'-6"	112'-6"	40'

NOTES: * MINOR VARIATION TO THE 25'-0" DIMENSION IS PERMISSIBLE TO ACCOMODATE THE 12'-6" IN GUARDRAIL LENGTHS.

** NO GUARDRAIL IS REQUIRED ON THE TRAILING END WHEN THIS DISTANCE EXCEEDS CLEAR ROADSIDE RECOVERY AREA FOR THE APPROPRIATE DESIGN SPEED.

*** BASED ON "N" OF 12'

THE DESIGN LAYOUT FOR LENGTHS SHOWN ON THIS STANDARD ARE MINIMUM DESIGN LENGTHS.

DETAIL OF GUARDRAIL APPROACHING DUAL LANE BRIDGES

STATE OF NORTH CAROLINA
DEPT. OF TRANSPORTATION
DIVISION OF HIGHWAYS
RALEIGH, N.C.

ENGLISH STANDARD DRAWING FOR
GUARDRAIL PLACEMENT

SHEET 2 OF 12
862.01

STATE OF
NORTH CAROLINA
DEPT. OF TRANSPORTATION
DIVISION OF HIGHWAYS
RALEIGH, N.C.

ENGLISH STANDARD DRAWING FOR
GUARDRAIL PLACEMENT

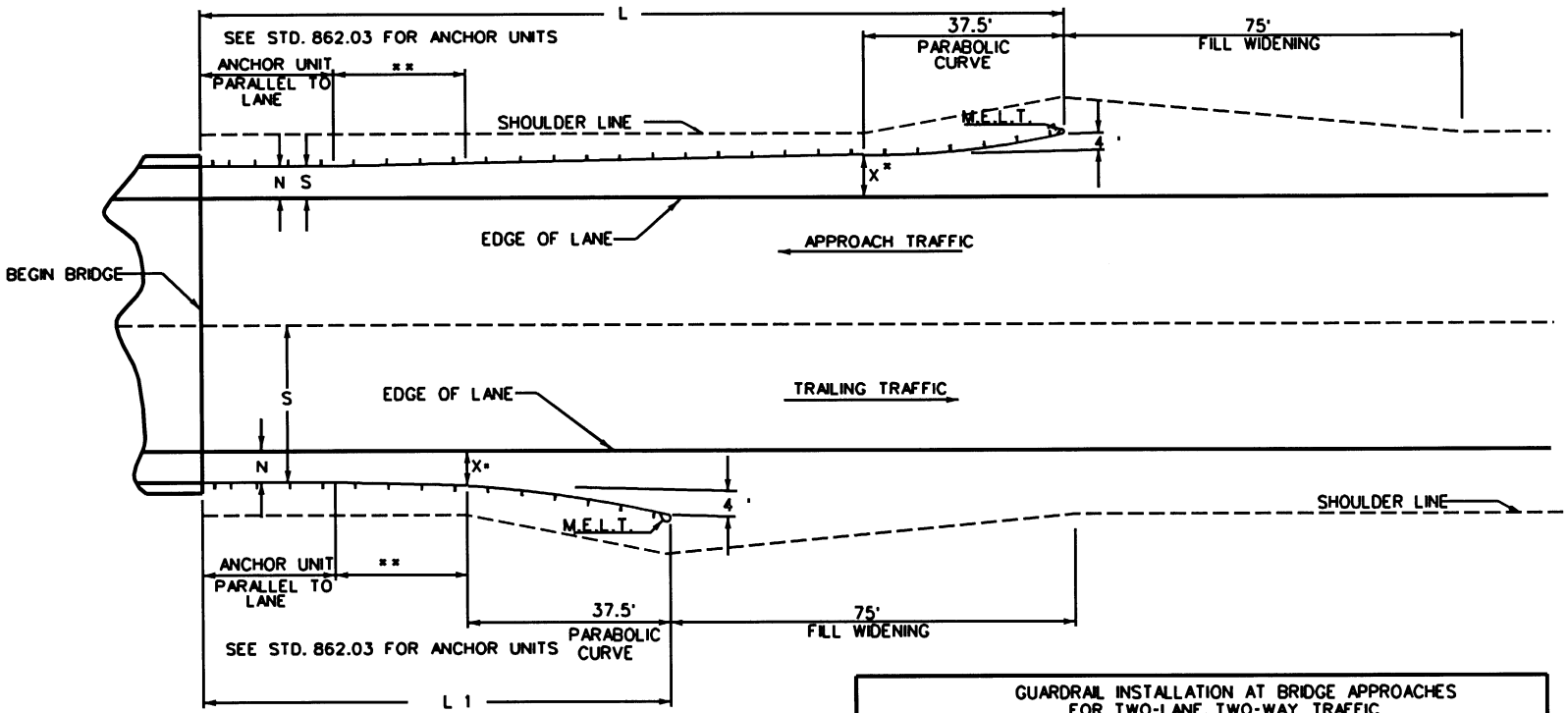

GUARDRAIL INSTALLATION AT BRIDGE APPROACHES FOR TWO-LANE, TWO-WAY TRAFFIC								
DESIGN SPEED (MPH)	"L" APPROACH LENGTH (FT.)				"L1" TRAILING LENGTH (FT.)			
	DESIGN YEAR ADT		CURRENT YEAR ADT		DESIGN YEAR ADT		CURRENT YEAR ADT	
	OVER 2000	1001-2000	400-1000	UNDER 400	OVER 2000	1001-2000	400-1000	UNDER 400
70	300	300	300	262.5	125	125	100	87.5
60	250	250	225	200	100	87.5	87.5	87.5
50	162.5	162.5	137.5	137.5	87.5	87.5	87.5	87.5
40	100	87.5	87.5	87.5	87.5	87.5	87.5	87.5
X *	8'	6'	4'	2'	8'	6'	4'	2'

* USE FLARE RATE AS THE CONTROL IF THE X DISTANCE IS NOT OBTAINED. (X IS BASED ON SHOULDER WIDTHS IN THE HIGHWAY DESIGN BRANCH MANUAL, PART 1, 1-4B, F1).

** USE 25' PARABOLIC CURVE WITH 1' OFFSET IF FLARE RATE IS SHARPER THAN 13:1.

MAXIMUM FLARE RATES										
DESIGN SPEED	70 MPH		60 MPH		50 MPH		40 MPH		30 MPH	
S	<10'	>10'	<8'	>8'	<6'	>6'	<5'	>5'	<4'	>4'
FLARE RATES	30:1	15:1	26:1	13:1	21:1	11:1	17:1	9:1	13:1	8:1

LENGTHS AND OFFSETS FOR PROPOSED GUARDRAIL AT TWO LANE - TWO WAY LOCATIONS

STATE OF
NORTH CAROLINA
DEPT. OF TRANSPORTATION
DIVISION OF HIGHWAYS
RALEIGH, N.C.

ENGLISH STANDARD DRAWING FOR
GUARDRAIL PLACEMENT

SHEET 3 OF 12
862.01

STATE OF
NORTH CAROLINA
DEPT. OF TRANSPORTATION
DIVISION OF HIGHWAYS
RALEIGH, N.C.

ENGLISH STANDARD DRAWING FOR
GUARDRAIL PLACEMENT

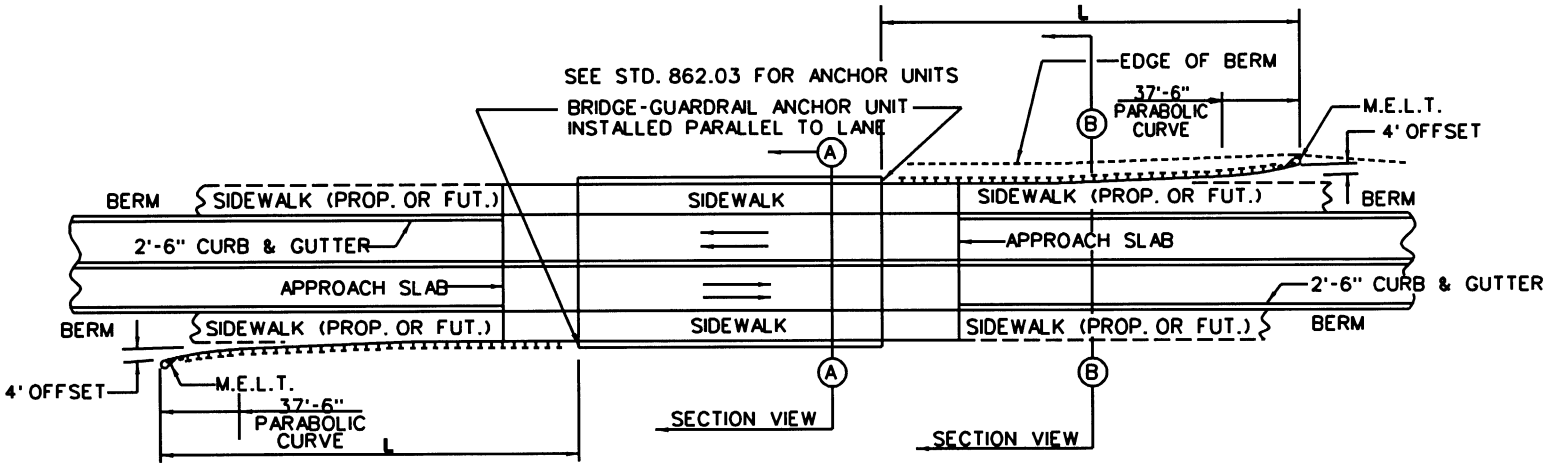

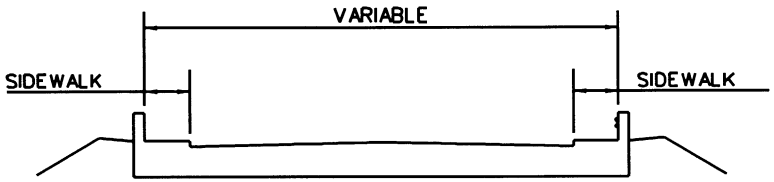

SECTION A-A

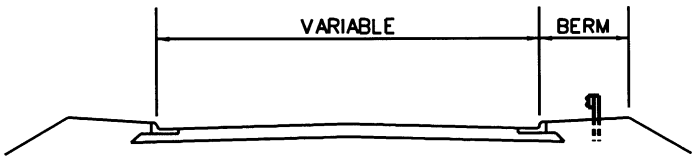

SECTION B-B

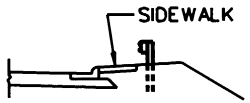

MINIMUM GUARDRAIL LENGTHS "L" REQUIRED AT BRIDGE APPROACHES ON 2'-6" CONCRETE CURB AND GUTTER ROADWAYS	
DESIGN SPEED (MPH)	"L"
40	125'
50	200'

NOTE: "L" VALUES ARE BASED ON NO HAZARDS OTHER THAN END OF BRIDGE BEING PRESENT WITHIN THE CLEAR ZONE.

STANDARD GUARDRAIL PLACEMENT AT BRIDGES WITH 2'-6" CONCRETE CURB AND GUTTER

STATE OF
NORTH CAROLINA
DEPT. OF TRANSPORTATION
DIVISION OF HIGHWAYS
RALEIGH, N.C.

ENGLISH STANDARD DRAWING FOR
GUARDRAIL PLACEMENT

SHEET 4 OF 12
862.01

STATE OF
NORTH CAROLINA
DEPT. OF TRANSPORTATION
DIVISION OF HIGHWAYS
RALEIGH, N.C.

ENGLISH STANDARD DRAWING FOR
GUARDRAIL PLACEMENT

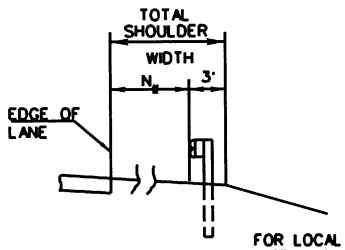

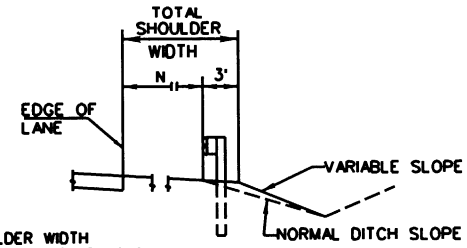

FOR LOCAL AND COLLECTORS "N" = MINIMUM SHOULDER WIDTH
FOR ARTERIALS, FREEWAYS AND INTERSTATES "N" = USABLE SHOULDER WIDTH PLUS 2'

SECTION A-A
FILL SECTION

SECTION A-A
CUT SECTION

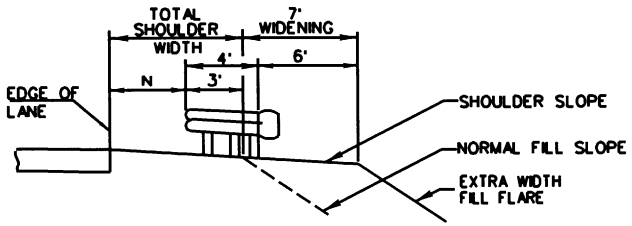

SECTION B-B
SHOULDER FLARE DETAIL FOR M.E.L.T.
FILL SECTION

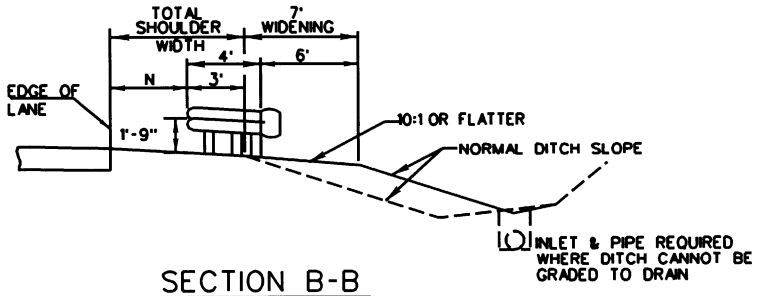

SECTION B-B
SHOULDER FLARE DETAIL FOR M.E.L.T.
CUT SECTION

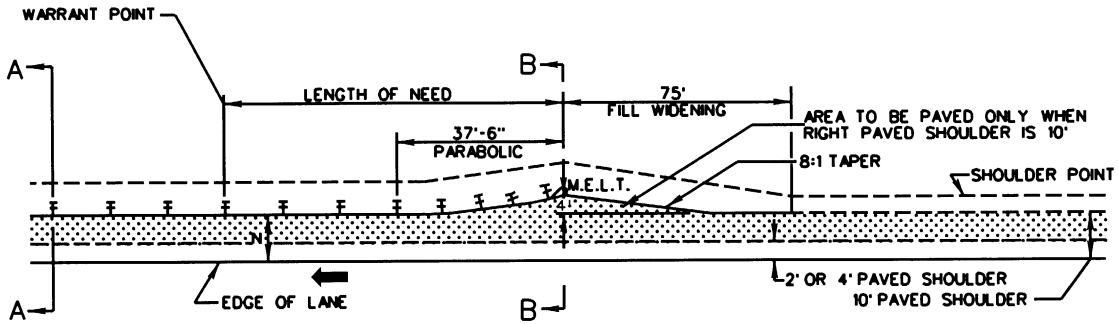

DETAIL OF BEGINNING OF GUARDRAIL
IN CUT OR FILL SECTION

STATE OF
NORTH CAROLINA
DEPT. OF TRANSPORTATION
DIVISION OF HIGHWAYS
RALEIGH, N.C.

ENGLISH STANDARD DRAWING FOR
GUARDRAIL PLACEMENT

SHEET 5 OF12
862.01

STATE OF NORTH CAROLINA
DEPT. OF TRANSPORTATION
DIVISION OF HIGHWAYS
RALEIGH, N.C.

ENGLISH STANDARD DRAWING FOR
GUARDRAIL PLACEMENT

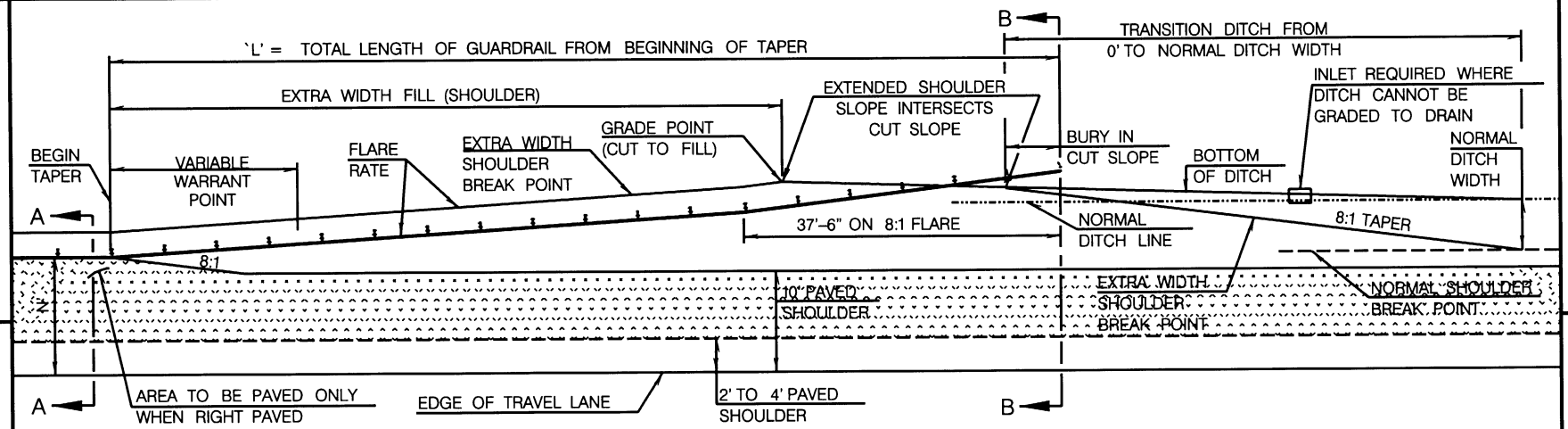

PLAN VIEW

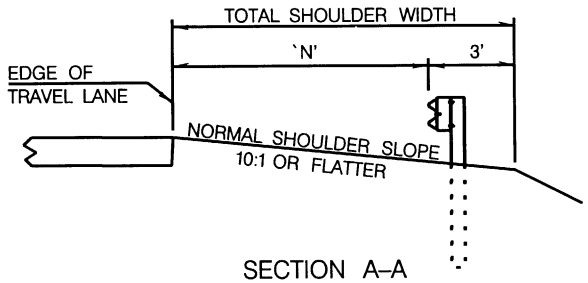

SECTION A–A

DESIGN SPEED	70 MPH	60 MPH	50 MPH
FLARE RATES	15:1	13:1	11:1

NOTE:
`N' IS SHOULDER WIDTH FROM EDGE OF TRAVEL LANE TO FACE OF GUARDRAIL

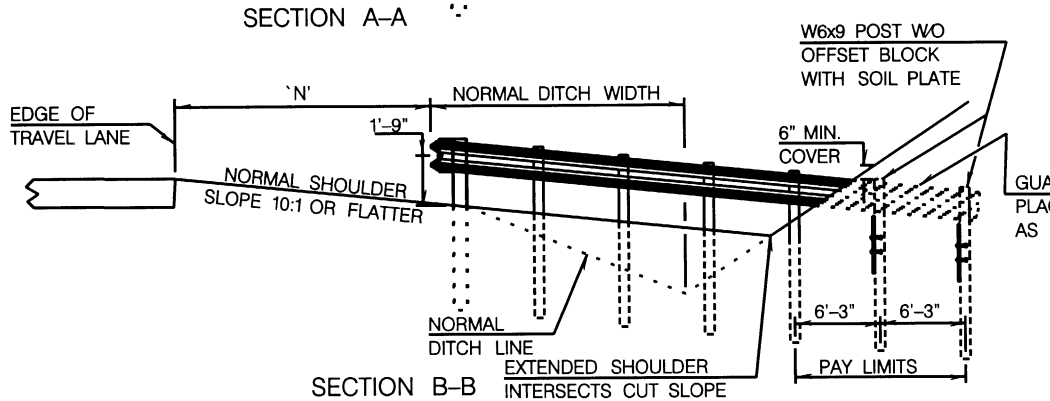

SECTION B–B

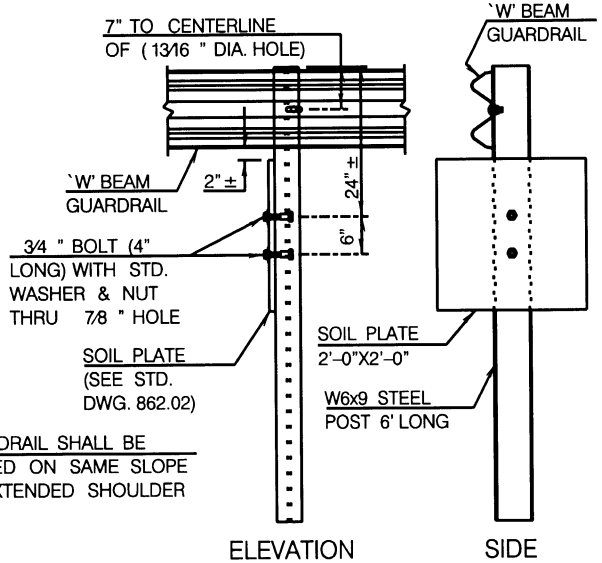

VIEWS OF UNDERGROUND POSTS

DETAIL OF GUARDRAIL BURIED IN CUT SECTION

STATE OF NORTH CAROLINA
DEPT. OF TRANSPORTATION
DIVISION OF HIGHWAYS
RALEIGH, N.C.

ENGLISH STANDARD DRAWING FOR
GUARDRAIL PLACEMENT

SHEET 6 OF 12
862.01

d:\08620106.dgn May. 25, 1999 17:01:06

STATE OF
NORTH CAROLINA
DEPT. OF TRANSPORTATION
DIVISION OF HIGHWAYS
RALEIGH, N.C.

ENGLISH STANDARD DRAWING FOR
GUARDRAIL PLACEMENT

NOTES:

SHOP CURVED GUARDRAIL IS DEFINED AS HAVING A RADIUS OF 150' OR LESS.

WHENEVER SHOP CURVED GUARDRAIL IS USED AS AN ANCHOR AND THE RADIUS IS FROM 20' TO 75', THE LENGTH SHALL BE A MINIMUM OF 50' AND SHALL BE FLARED WITH AN AT-1 ANCHOR UNIT. REFER TO DETAIL 1

WHENEVER SHOP CURVED GUARDRAIL RADIUS IS MORE THAN 75', THE SHOP CURVED GUARDRAIL SHALL BE FLARED WITH A M.E.L.T. ANCHOR UNIT. REFER TO DETAIL 2.

WHEN RADIUS IS LESS THAN 20' REFER TO SHEET 8.

MAINTAIN CLEAR SIGHT DISTANCE.

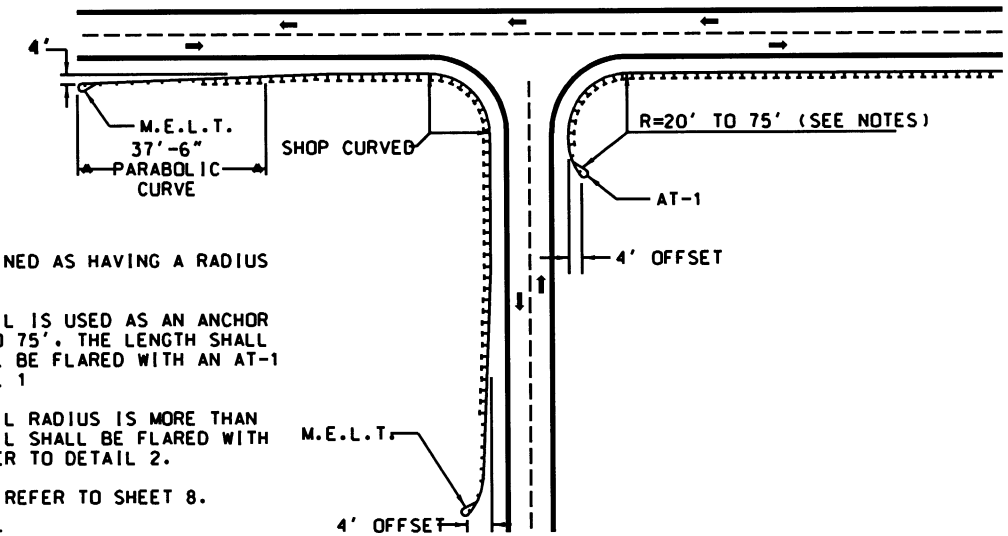

DETAIL-1

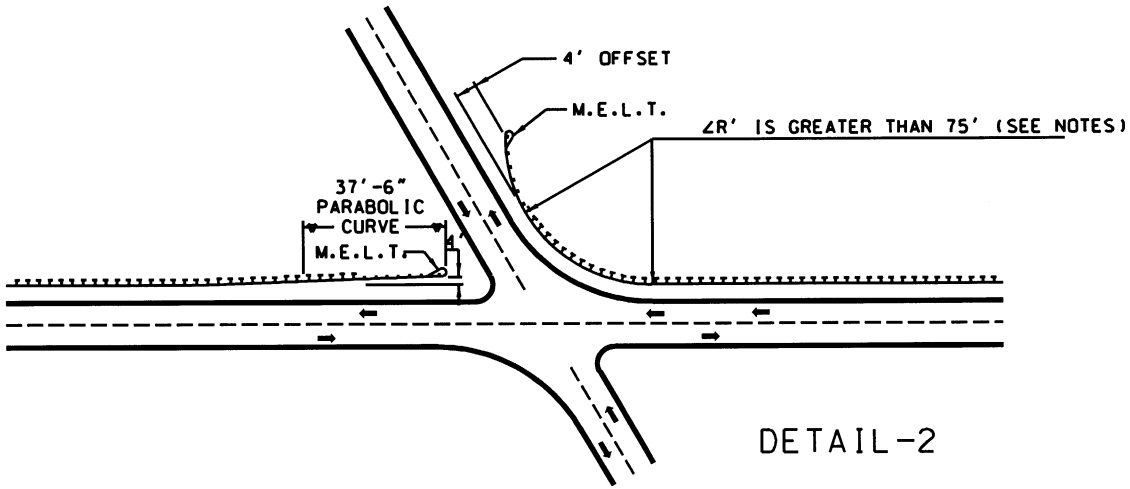

DETAIL-2

GUARDRAIL TREATMENT AT INTERSECTIONS

SHEET 7 OF 12
862.01

STATE OF
NORTH CAROLINA
DEPT. OF TRANSPORTATION
DIVISION OF HIGHWAYS
RALEIGH, N.C.

ENGLISH STANDARD DRAWING FOR
GUARDRAIL PLACEMENT

SHEET 7 OF 12
862.01

d:\08620107.dgn May. 25, 1999 16:21:28

STATE OF
NORTH CAROLINA
DEPT. OF TRANSPORTATION
DIVISION OF HIGHWAYS
RALEIGH, N.C.

ENGLISH STANDARD DRAWING FOR
GUARDRAIL PLACEMENT

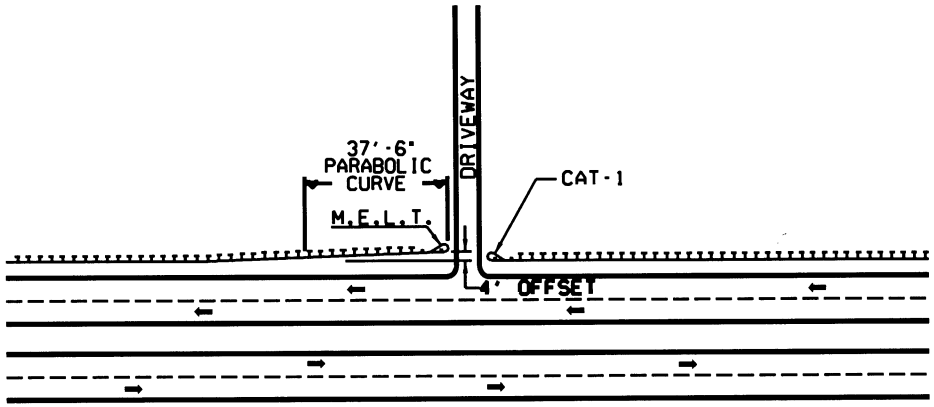

DETAIL-3
DIVIDED HIGHWAY

NOTE: USE DETAIL 3 & 4 WHENEVER 20' OR LARGER RADIUS CANNOT BE UTILIZED.

MAINTAIN CLEAR SIGHT DISTANCE.

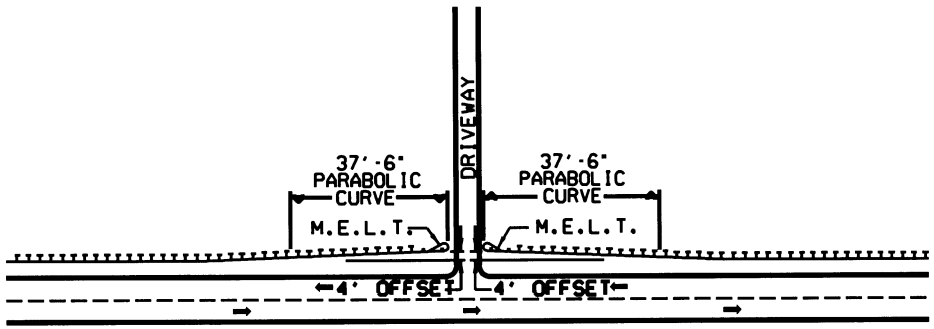

DETAIL-4

GUARDRAIL TREATMENT AT DRIVEWAYS

STATE OF
NORTH CAROLINA
DEPT. OF TRANSPORTATION
DIVISION OF HIGHWAYS
RALEIGH, N.C.

ENGLISH STANDARD DRAWING FOR
GUARDRAIL PLACEMENT

SHEET 8 OF 12
862.01

d:\08620108.dgn May. 25, 1999 16:26:24

STATE OF
NORTH CAROLINA
DEPT. OF TRANSPORTATION
DIVISION OF HIGHWAYS
RALEIGH, N.C.

ENGLISH STANDARD DRAWING FOR
GUARDRAIL PLACEMENT
12'-0" AND 18'-3" CLEAR SPANS

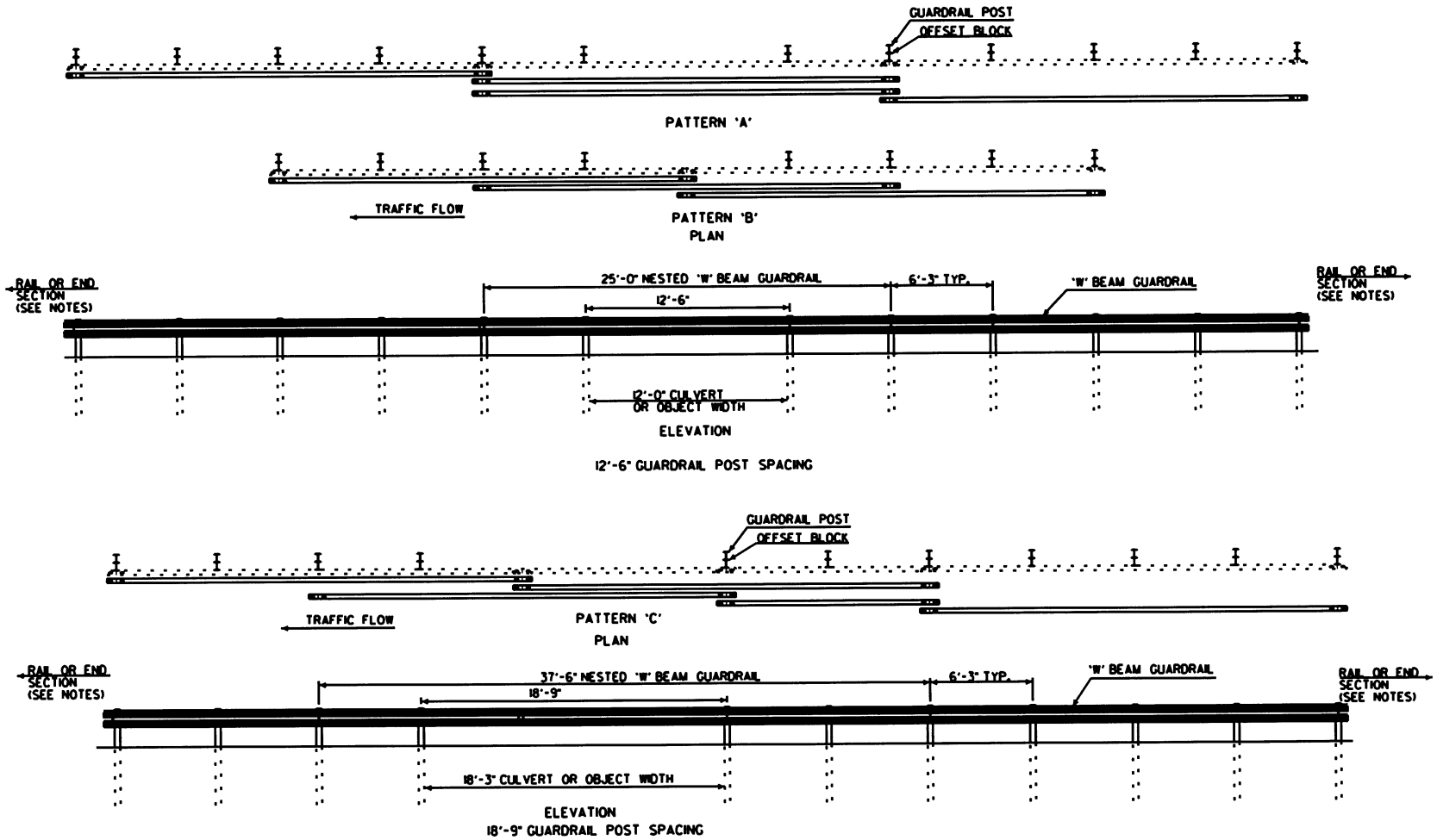

GENERAL NOTES:
1. PATTERNS SHOWN ARE SUGGESTIONS ONLY. 12'-6" AND 25'-0" GUARDRAIL SECTIONS MAY BE USED IN THE NESTED 'W' BEAM GUARDRAIL AREAS.
   NESTED GUARDRAIL IS PLACEMENT OF ONE RAIL SECTION INSIDE THE OTHER. NO MORE THAN THREE (3) RAILS SHALL JOIN AT ANY ONE (1) SPLICE JOINT.
2. SPLICE JOINTS MAY OCCUR IN NESTED AREA IF ALL RAILS ARE BOLTED TOGETHER. ALL RAILS (3 MAX.) PRESENT AT A JOINT SHALL BE FULLY BOLTED TOGETHER.
3. STANDARD GUARDRAIL POST AND OFFSET BLOCKS (STEEL OR WOOD) SHALL BE USED.
4. LAP RAIL IN THE DIRECTION OF TRAFFIC FLOW.
5. SEE ROADWAY PLANS FOR LOCATIONS AND CONTINUATION OF RAIL OR END SECTIONS.
6. SEE STANDARD DRAWING 862.03 FOR CLEAR SPANS GREATER THAN 18'-3".

STATE OF
NORTH CAROLINA
DEPT. OF TRANSPORTATION
DIVISION OF HIGHWAYS
RALEIGH, N.C.

ENGLISH STANDARD DRAWING FOR
GUARDRAIL PLACEMENT
12'-0" AND 18'-3" CLEAR SPANS

SHEET 9 OF 12
862.01

d:\08620109.dgn May. 25, 1999 16:44:59

STATE OF
NORTH CAROLINA
DEPT. OF TRANSPORTATION
DIVISION OF HIGHWAYS
RALEIGH, N.C.

ENGLISH STANDARD DRAWING FOR
GUARDRAIL PLACEMENT

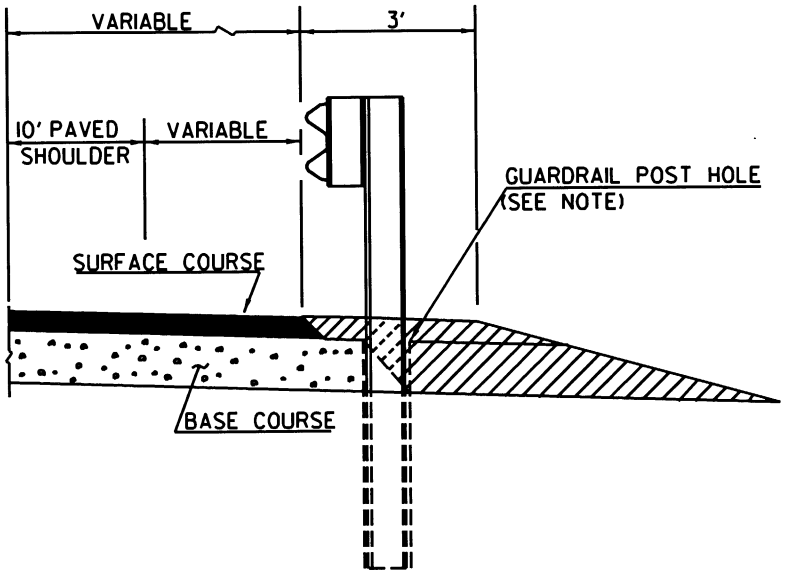

FLEXIBLE PAVED SHOULDER

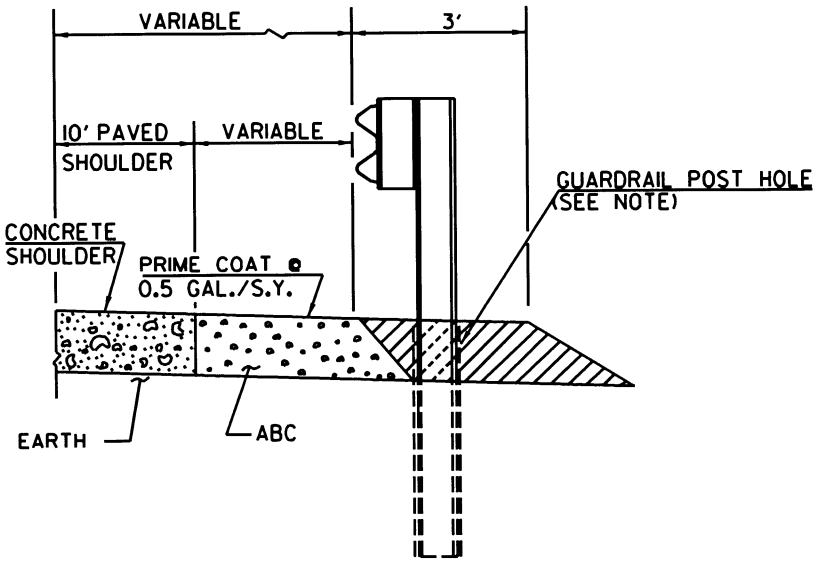

CONCRETE PAVED SHOULDER

EARTH MATERIAL

NOTE:
WHEN WOODEN GUARDRAIL POSTS ARE USED, HOLES SHALL BE DRILLED THROUGH EARTH MATERIAL AND BASE COURSE. THE POST MAY THEN BE DRIVEN TO THE PROPER DEPTH. THE HOLE SHALL BE OF SUFFICIENT SIZE TO ACCOMMODATE THE PARTICULAR POST BEING USED. HOLES SHALL BE BACKFILLED AND TAMPED USING THE EXCAVATED MATERAIL.

STATE OF
NORTH CAROLINA
DEPT. OF TRANSPORTATION
DIVISION OF HIGHWAYS
RALEIGH, N.C.

ENGLISH STANDARD DRAWING FOR
GUARDRAIL PLACEMENT

SHEET 10 OF 12
862.01

d:\08620110.dgn May. 25, 1999 16:35:25

STATE OF NORTH CAROLINA
DEPT. OF TRANSPORTATION
DIVISION OF HIGHWAYS
RALEIGH, N.C.

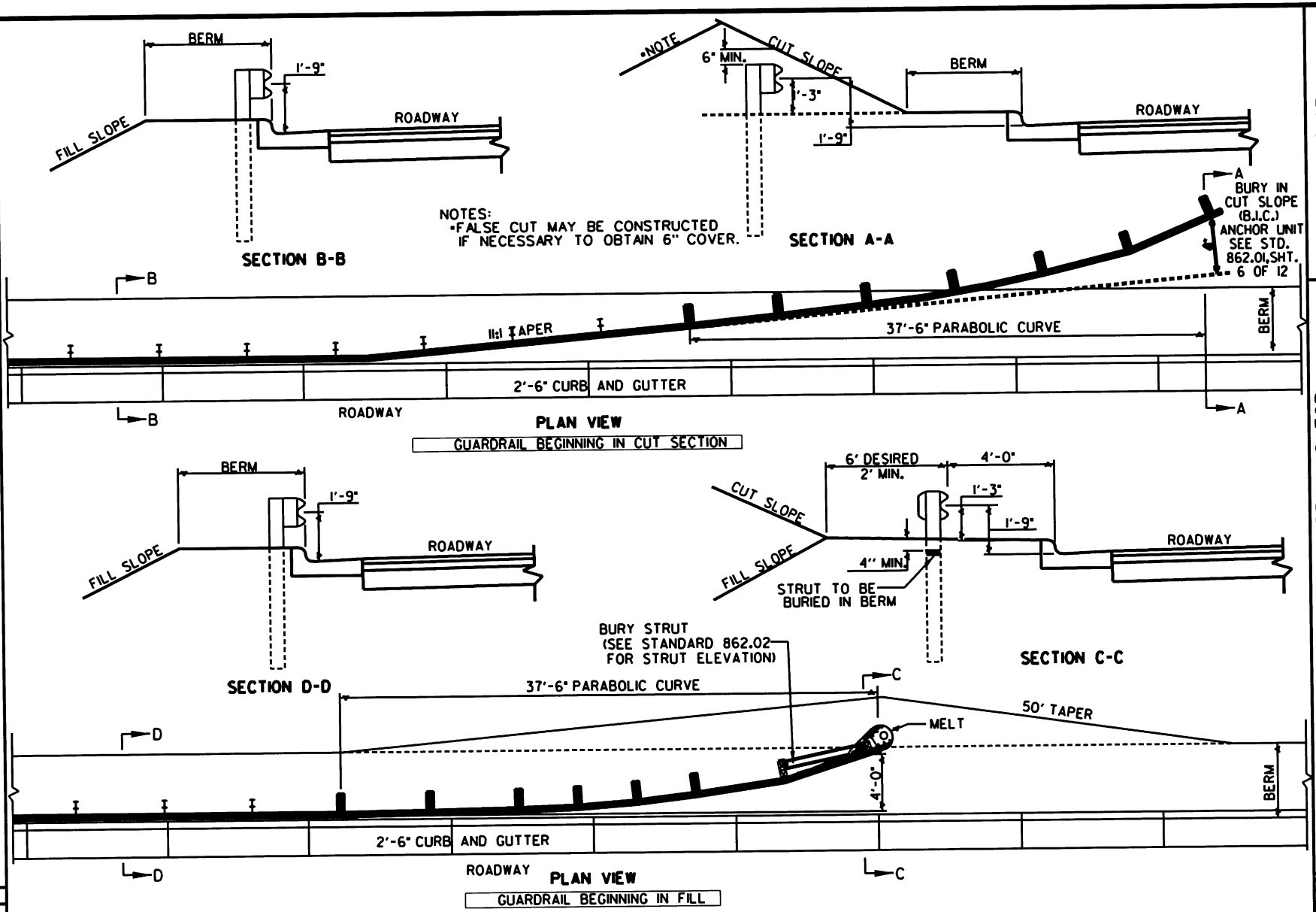

STATE OF NORTH CAROLINA
DEPT. OF TRANSPORTATION
DIVISION OF HIGHWAYS
RALEIGH, N.C.

ENGLISH STANDARD DRAWING FOR
GUARDRAIL PLACEMENT
GUARDRAIL AT FACE OF CURB

SHEET 11 OF 12
862.01

ENGLISH STANDARD DRAWING FOR
GUARDRAIL PLACEMENT
GUARDRAIL AT FACE OF CURB

SHEET 11 OF 12
862.01

d:\08620111.dgn May. 26, 1999 08:52:16

STATE OF
NORTH CAROLINA
DEPT. OF TRANSPORTATION
DIVISION OF HIGHWAYS
RALEIGH, N.C.

ENGLISH STANDARD DRAWING FOR
GUARDRAIL PLACEMENT
GUARDRAIL 12' OFFSET FROM FACE OF CURB

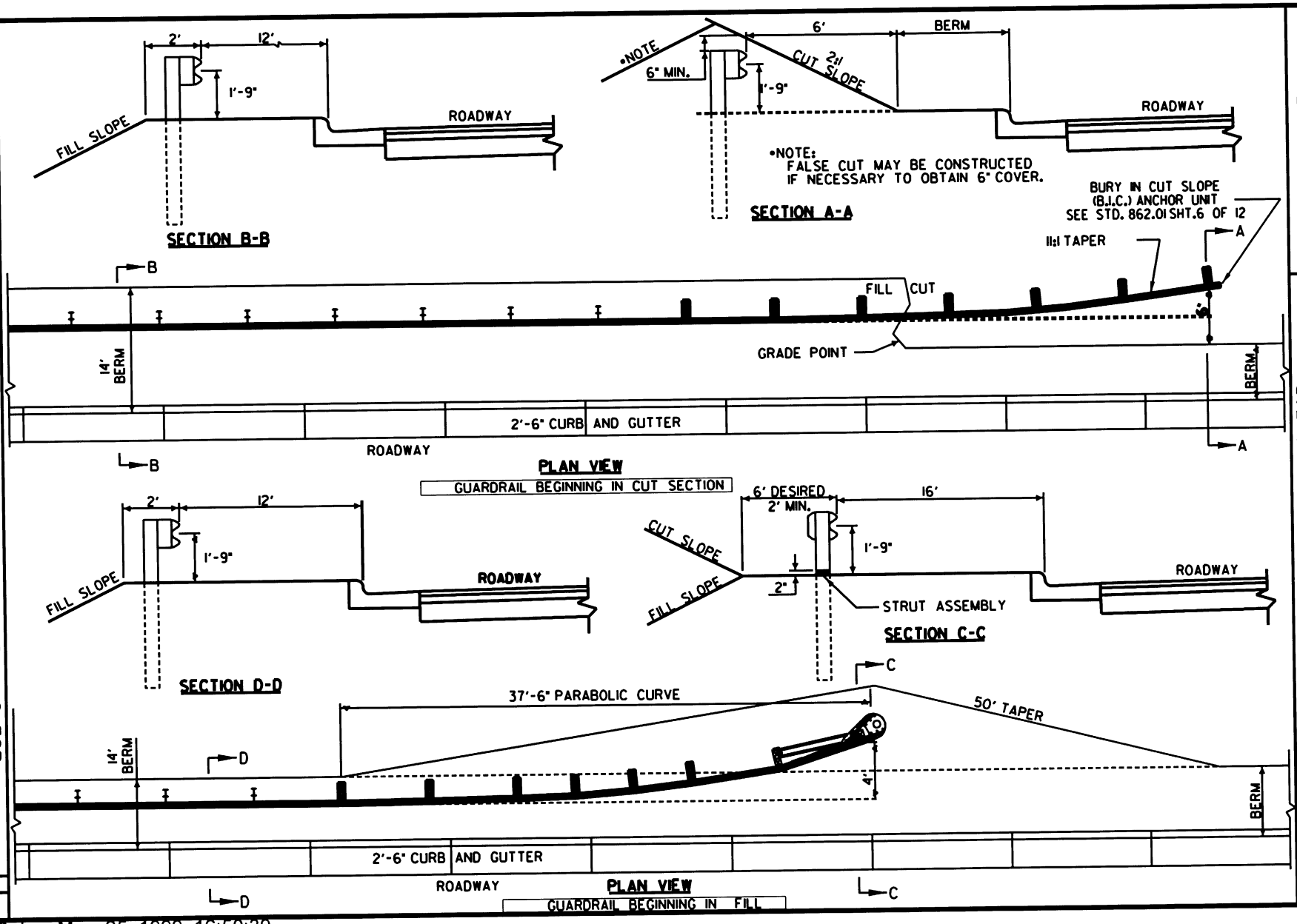

SHEET 12 OF 12
862.01

STATE OF
NORTH CAROLINA
DEPT. OF TRANSPORTATION
DIVISION OF HIGHWAYS
RALEIGH, N.C.

ENGLISH STANDARD DRAWING FOR
GUARDRAIL PLACEMENT
GUARDRAIL 12' OFFSET FROM FACE OF CURB

SHEET 12 OF 12
862.01

d:\08620112.dgn May. 25, 1999 16:50:39

STATE OF
NORTH CAROLINA
DEPT. OF TRANSPORTATION
DIVISION OF HIGHWAYS
RALEIGH, N.C.

ENGLISH STANDARD DRAWING FOR
MOUNTING OF TYPE 'D', 'E' AND
'F' SIGNS ON 'U' CHANNEL POSTS

SHEET 1 OF 2
904.50

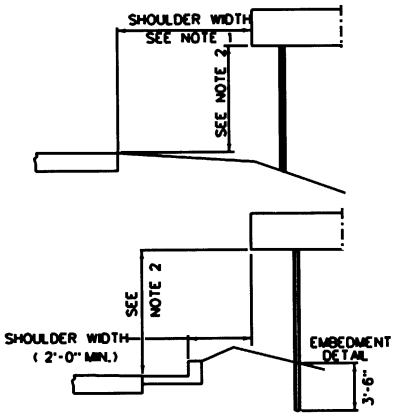

HORIZONTAL AND VERTICAL CLEARANCES

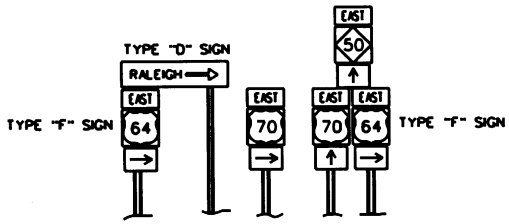

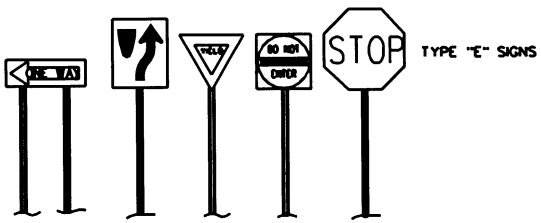

TYPICAL SIGN SHAPES AND COMBINATIONS

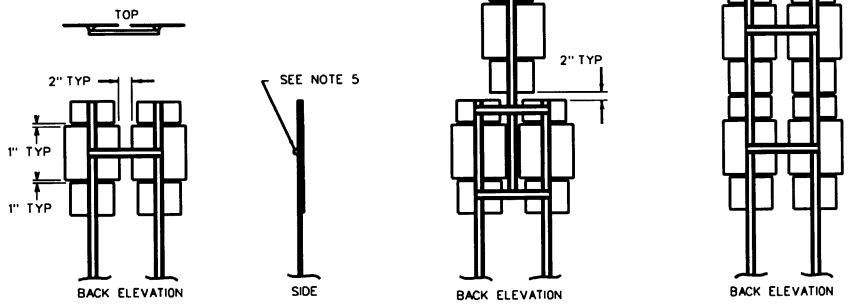

FRAMING AND CROSS-BRACING DETAILS
TYPE "F" SIGNS

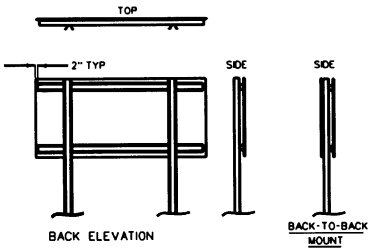

FRAMING AND CROSS-BRACING DETAIL
TYPE "D' AND "E" SIGN

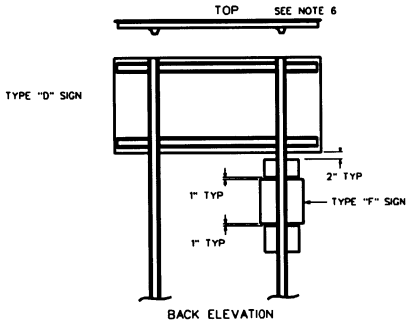

FRAMING AND CROSS-BRACING DETAIL
FOR COMBINATION TYPE "D" AND "F" SIGNS

NOTES:

1. TYPE "D", "E", AND "F" SIGNS ON FREEWAYS SHALL BE ERECTED WITH THE NEAR EDGE OF THE SIGN 20 FT. FROM THE TRAVEL LANE. ALL OTHER "D", "E", AND "F" SIGNS SHALL BE ERECTED WITH THE NEAR EDGE OF THE SIGN AT THE EDGE OF THE SHOULDER BREAK (6 FT. MINIMUM CLEARANCE, 12 FT. DESIRABLE, FROM THE EDGE OF TRAVEL LANE), OR AS DIMENSIONED ON PLAN SHEETS.
2. TYPE "D", "E", AND "F" SIGNS SHALL BE ERECTED WITH THE BOTTOM OF SIGN ASS'Y 6 FT. ABOVE THE EDGE OF THE TRAVEL LANE ON FREEWAYS AND 5 FT. ON OTHER ROUTES. THE VERTICAL CLEARANCE SHALL BE 7 FT. WHERE REQUIRED FOR PEDESTRIAN TRAFFIC AND/OR PARKED VEHICLES, OR A 6 FT.+, MINIMUM CLEARANCE TO THE SIDEWALK OR WALKING SURFACE.
3. THE VERTICAL DIMENSION BETWEEN MOUNTING HOLE CENTERS ON ALL TYPES "D", "E", AND "F" SIGNS SHALL BE 30" MAXIMUM. THE VERTICAL AND HORIZONTAL DIMENSIONS BETWEEN MOUNTING HOLES SHALL BE TO THE WHOLE INCH. EACH SIGN PANEL SHALL HAVE A MINIMUM OF 2 BOLTS PER SUPPORT.
4. BOLT THREADS SHALL BE DEFORMED WITH A PUNCH OR CHISEL AFTER INSTALLATION SUFFICIENTLY TO REDUCE REMOVAL BY VANDALS.
5. CROSS-BRACING SHALL BE FURNISHED AND INSTALLED AS SHOWN IN DETAILS.
6. POST AND CROSSBRACING SHALL BE INSTALLED WITH THE WIDE SIDE OF THE FLANGE TOWARD THE BACK OF SIGN(S) FOR COMBINATION TYPE "D" & "F" SIGNS.

STATE OF
NORTH CAROLINA
DEPT. OF TRANSPORTATION
DIVISION OF HIGHWAYS
RALEIGH, N.C.

ENGLISH STANDARD DRAWING FOR
MOUNTING OF TYPE 'D', 'E' AND
'F' SIGNS ON 'U' CHANNEL POSTS

SHEET 1 OF 2
904.50

STATE OF
NORTH CAROLINA
DEPT. OF TRANSPORTATION
DIVISION OF HIGHWAYS
RALEIGH, N.C.

ENGLISH STANDARD DRAWING FOR
MOUNTING OF TYPE 'D', 'E' AND
'F' SIGNS ON 'U' CHANNEL POSTS

SHEET 2 OF 2
904.50

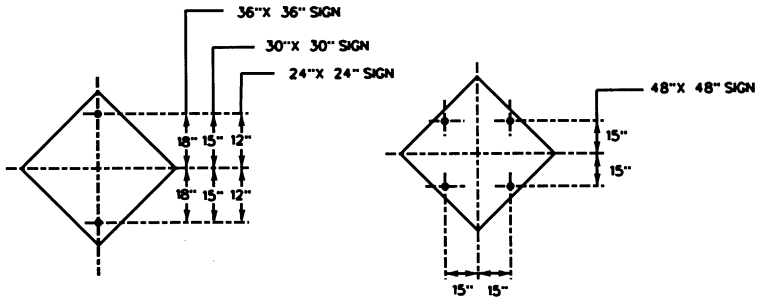

TYPE "E" SIGNS

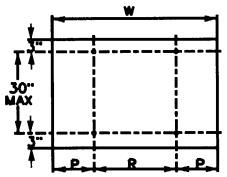

TYPE "D" SIGNS

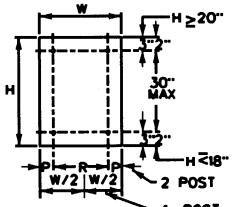

TYPE "E" AND "F" SIGNS

	NO. SUPPORTS		
	2	3*	4
P	.207W	.145W	.107W
R	.586W	.355W	.262W

UNITS ON ATTACHED SHEET
* MINIMUM 3.5 FT. BETWEEN CHANNEL POSTS

HOLE PUNCHING DETAIL

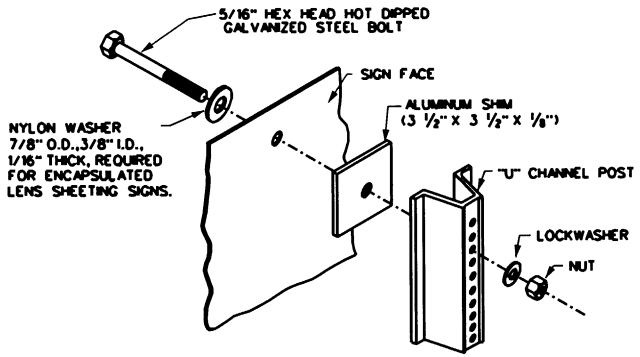

ASSEMBLY DETAIL

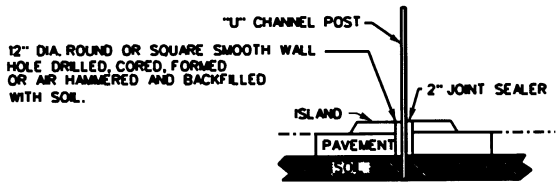

DETAIL FOR INSTALLATION OF CHANNEL POST IN CONCRETE

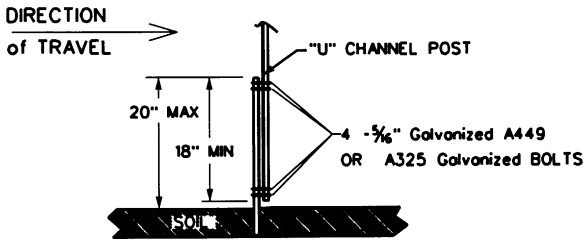

DETAIL FOR SPLICING STEEL U-CHANNEL POST ON SMALL SIGN SUPPORT

STATE OF
NORTH CAROLINA
DEPT. OF TRANSPORTATION
DIVISION OF HIGHWAYS
RALEIGH, N.C.

ENGLISH STANDARD DRAWING FOR
MOUNTING OF TYPE 'D', 'E' AND
'F' SIGNS ON 'U' CHANNEL POSTS

SHEET 2 OF 2
904.50

STATE OF
NORTH CAROLINA
DEPT. OF TRANSPORTATION
DIVISION OF HIGHWAYS
RALEIGH, N.C.

ENGLISH STANDARD DRAWING FOR
PAVEMENT MARKINGS
LINE TYPES

SHEET 1 OF 2
1205.01

CONTINUOUS LINES

EDGE LINE

TURN LANE LINE

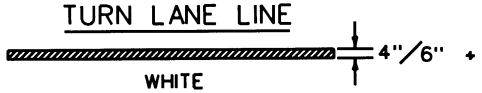

CENTER LINE

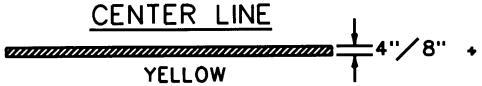

GORE LINE

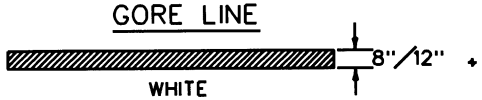

DIAGONAL LINE

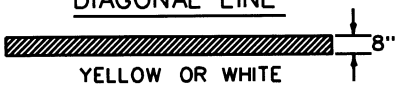

CROSSWALK LINE

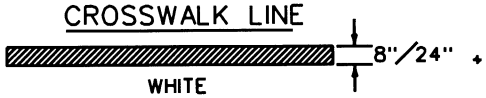

STOP OR TRANSVERSE BAR

SKIP LINES

10' SKIP LINES
YELLOW OR WHITE

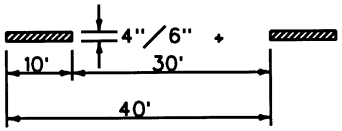

BLACK - WHITE COMBINATION
10' SKIP LINES

FOR USE ON CONCRETE PAVEMENTS TO PROVIDE CONTRAST FOR THE WHITE LANE LINE, ALONG THRU LANES AND RAMP LANES.

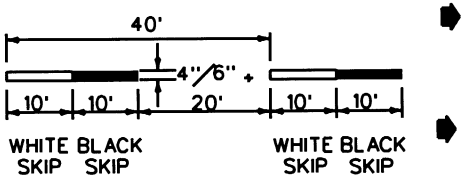

MINI-SKIP LINES

2' MINI-SKIP LINES
YELLOW OR WHITE

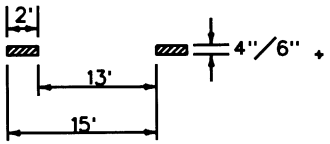

+ NOTE:

WHERE TWO WIDTHS ARE INDICATED THE FIRST WIDTH APPLIES FOR A "NORMAL" WIDTH LINE, THE SECOND WIDTH APPLIES FOR A "WIDE" LINE.

"WIDE" LINES ARE REQUIRED WHEN DESIGNATED IN THE PLANS, OR WHEN DIRECTED BY THE ENGINEER.

LEGEND

W = WIDTH OF TRAVEL LANE

DIRECTION OF TRAFFIC FLOW

STATE OF
NORTH CAROLINA
DEPT. OF TRANSPORTATION
DIVISION OF HIGHWAYS
RALEIGH, N.C.

ENGLISH STANDARD DRAWING FOR
PAVEMENT MARKINGS
LINE TYPES

SHEET 1 OF 2
1205.01

d:\idiq\12050101.dgn May. 25, 1999 10:44:27

STATE OF NORTH CAROLINA
DEPT. OF TRANSPORTATION
DIVISION OF HIGHWAYS
RALEIGH, N.C.

ENGLISH STANDARD DRAWING FOR
PAVEMENT MARKINGS
OFFSETS

EDGE LINE OFFSET DETAIL

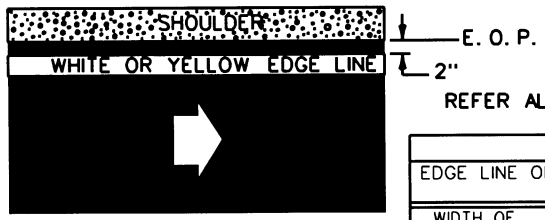

REFER ALSO TO TABLE 1

TABLE 1

EDGE LINE OFFSETS FOR 2-LANE, 2-WAY ROADWAYS WITH UN-PAVED SHOULDERS

WIDTH OF TRAVEL PAVEMENT	MAX. EDGE LINE OFFSET FROM E.O.P.	MINIMUM LANE WIDTH
16' - 20'	2"	8' - 10'
22'	2"	11'
24'	1'	11'
26'	2'	11'
28'	2'	12'
30'	3'	12'
32'	4'	12'

CENTER LINE OFFSET DETAIL

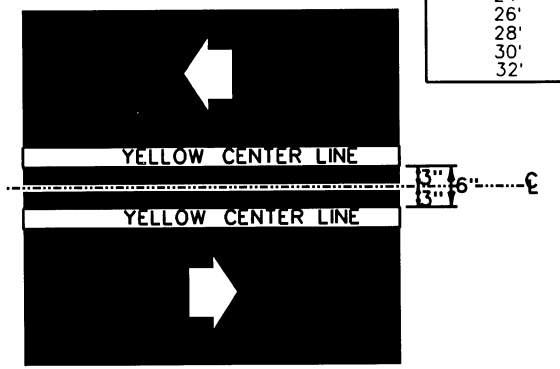

LANE LINE OFFSET DETAIL

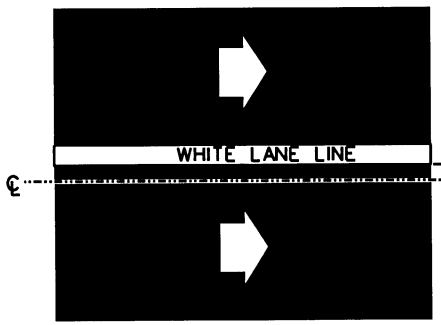

LEGEND

W = WIDTH OF TRAVEL LANE

DIRECTION OF TRAFFIC FLOW

TWO-WAY UNDIVIDED ROADWAY

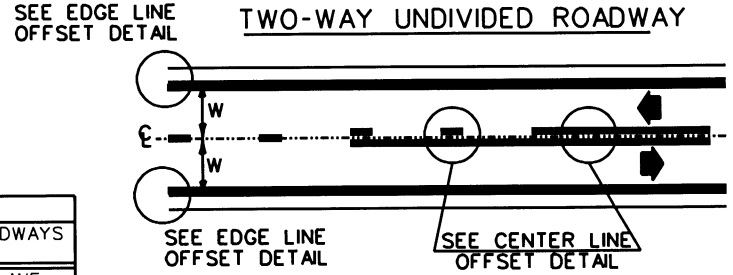

TWO-WAY UNDIVIDED ROADWAY WITH TWO-WAY LEFT TURN LANE

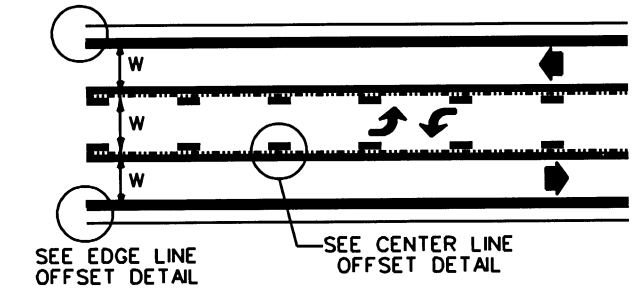

MULTI-LANE ROADWAY

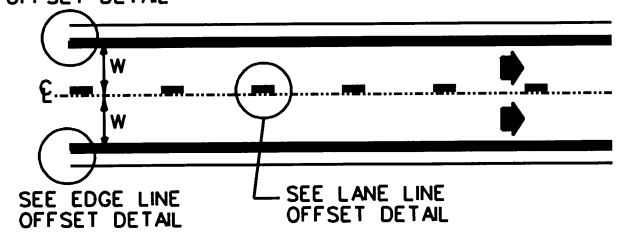

GENERAL NOTES

PAVEMENT MARKING LINES SHOULD BE OFFSET 2 INCHES FROM LONGITUDINAL PAVEMENT CONSTRUCTION JOINTS, AS FEASIBLE, EXCEPT AS INDICATED BELOW:

-YELLOW SKIP LINES ON TWO-LANE, TWO-WAY ROADWAYS (WHERE PASSING IS ALLOWED IN BOTH DIRECTIONS) ARE REQUIRED TO BE PLACED ON THE CENTER LINE TO ALLOW FOR FUTURE REPAINTING OF THE LINES WITH COMPATIBLE DEPARTMENT EQUIPMENT.

-DOUBLE YELLOW CENTER LINES SHALL BE OFFSET 3 INCHES ON EACH SIDE OF THE CENTER LINE TO ALLOW FOR PLACEMENT OF PAVEMENT MARKERS (PRESENT OR FUTURE PLACEMENT).

-WHITE LANE LINES SHOULD BE OFFSET 2 INCHES TOWARDS THE MEDIAN FROM LONGITUDINAL PAVEMENT CONSTRUCTION JOINTS.

STATE OF NORTH CAROLINA
DEPT. OF TRANSPORTATION
DIVISION OF HIGHWAYS
RALEIGH, N.C.

ENGLISH STANDARD DRAWING FOR
PAVEMENT MARKINGS
OFFSETS

SHEET 2 OF 2
1205.01

SHEET 2 OF 2
1205.01

d:\idiq\12050102.dgn May. 25, 1999 11:05:19

STATE OF NORTH CAROLINA
DEPT. OF TRANSPORTATION
DIVISION OF HIGHWAYS
RALEIGH, N.C.

ENGLISH STANDARD DRAWING FOR
PAVEMENT MARKINGS
TWO-LANE, TWO-WAY ROADWAYS

TWO-LANE, TWO-WAY ROADWAY

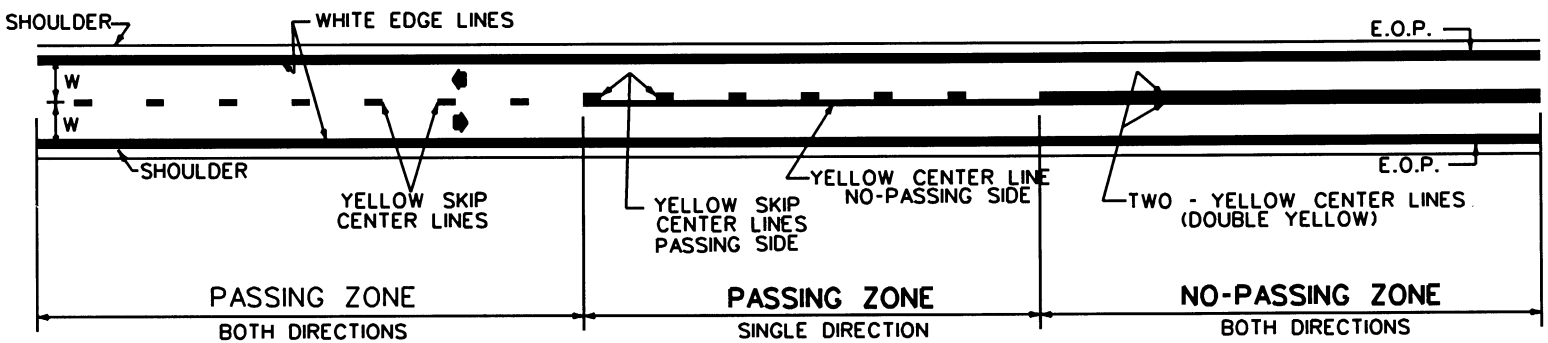

TWO-LANE, TWO-WAY ROADWAY WITH TWO-WAY LEFT TURN LANE

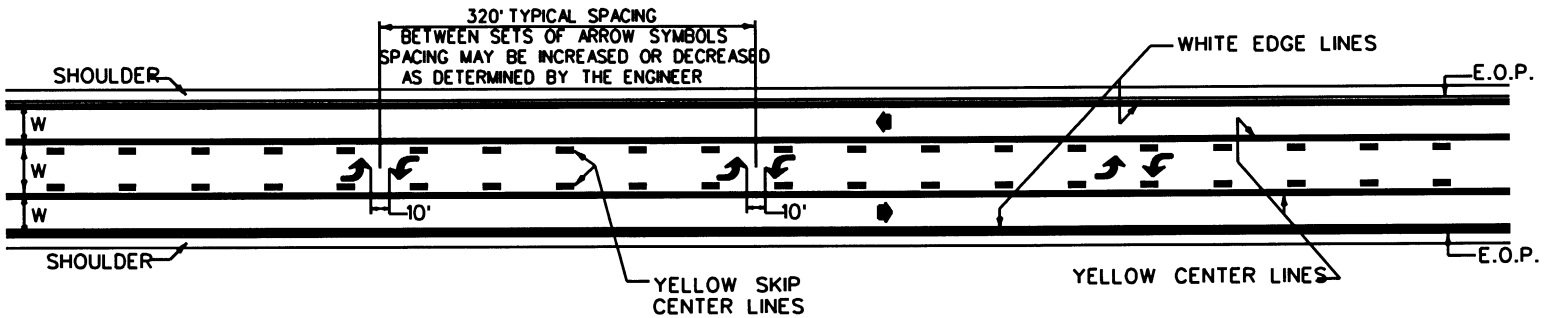

LEGEND

W=WIDTH OF TRAVEL LANE

DIRECTION OF TRAFFIC FLOW

GENERAL NOTES

- PASSING - NO PASSING ZONES WILL BE DETERMINED BY THE ENGINEER.
- EDGE LINES ARE NOT REQUIRED ALONG CURB AND GUTTER LOCATIONS.
- EDGE LINES SHALL NOT BE CONTINUED THRU INTERSECTIONS, AND SHOULD NOT BE BROKEN AT DRIVEWAYS.
- EDGE LINES SHOULD BE PLACED AT RAISED ISLAND LOCATIONS, OUTLINING THE SHAPE OF THE RAISED ISLAND.

STATE OF NORTH CAROLINA
DEPT. OF TRANSPORTATION
DIVISION OF HIGHWAYS
RALEIGH, N.C.

ENGLISH STANDARD DRAWING FOR
PAVEMENT MARKINGS
TWO-LANE, TWO-WAY ROADWAYS

SHEET 1 OF3
1205.02

d:\idiq\12050201.dgn May. 25, 1999 11:07:55