US Army Corps
of Engineers
Savannah District

Fort Stewart
Georgia

Solicitation Number
W912HN-04-R-0085
TUAV Storage/Maintenance
Volume I of II – Sections 00010 through 00800 and
Technical Provisions - Divisions 1 and 2
FY-04, Line Item 57696
August 2004

THIS SOLICITATION IS UNRESTRICTED PURSUANT TO THE
"BUSINESS OPPORTUNITY DEVELOPMENT REFORM ACT OF 1988"
(PUBLIC LAW 100-656)

U.S. ARMY ENGINEER DISTRICT, SAVANNAH
CORPS OF ENGINEERS
100 WEST OGLETHORPE AVENUE
SAVANNAH, GEORGIA 31401-3640

SOLICITATION, OFFER, AND AWARD *(Construction, Alteration, or Repair)*	1. SOLICITATION NO. W912HN-04-R-0085-0001	2. TYPE OF SOLICITATION [ ] SEALED BID (IFB) [X] NEGOTIATED *(RFP)*	3. DATE ISSUED 17-Aug-2004	PAGE OF PAGES 1 OF 161

IMPORTANT - The "offer" section on the reverse must be fully completed by offeror.

4. CONTRACT NO.	5. REQUISITION/PURCHASE REQUEST NO.	6. PROJECT NO.

7. ISSUED BY CODE W912HN	8. ADDRESS OFFER TO *(If Other Than Item 7)* CODE
US ARMY ENGINEER DISTRICT SAVANNAH 100 W OGLETHORPE AVENUE SAVANNAH GA 31401-3640 TEL: FAX:	**See Item 7** TEL: FAX:

9. FOR INFORMATION CALL:	A. NAME	B. TELEPHONE NO. *(Include area code)* *(NO COLLECT CALLS)*
	AMY A AQUECHE	912/652-5705

SOLICITATION

NOTE: In sealed bid solicitations "offer" and "offeror" mean "bid" and "bidder".

10. THE GOVERNMENT REQUIRES PERFORMANCE OF THE WORK DESCRIBED IN THESE DOCUMENTS *(Title, identifying no., date):*

Contract Specialist: Marian Alviar
Email: marian.c.alviar@sas02.usace.army.mil

Contracting Officer: Julie Anderson
Email: julie.a.anderson@sas02.usace.army.mil

TACTICAL UNMANNED AERIAL VEHICLE (TUAV) STORAGE/MAINTENANCE FACILITY
FORT STEWART, GEORGIA

11. The Contractor shall begin performance within 5 calendar days and complete it within 270 calendar days after receiving [ ] award, [X] notice to proceed. This performance period is [X] mandatory, [ ] negotiable. *(See _____ .)*

12 A. THE CONTRACTOR MUST FURNISH ANY REQUIRED PERFORMANCE AND PAYMENT BONDS? *(If "YES," indicate within how many calendar days after award in Item 12B.)* [X] YES [ ] NO	12B. CALENDAR DAYS 10

13. ADDITIONAL SOLICITATION REQUIREMENTS:

A. Sealed offers in original and 5 copies to perform the work required are due at the place specified in Item 8 by 02:00 PM *(hour)* local time 16 Sep 2004 *(date).* If this is a sealed bid solicitation, offers must be publicly opened at that time. Sealed envelopes containing offers shall be marked to show the offeror's name and address, the solicitation number, and the date and time offers are due.

B. An offer guarantee [X] is, [ ] is not required.

C. All offers are subject to the (1) work requirements, and (2) other provisions and clauses incorporated in the solicitation in full text or by reference.

D. Offers providing less than 60 calendar days for Government acceptance after the date offers are due will not be considered and will be rejected.

SOLICITATION, OFFER, AND AWARD (Continued)

(Construction, Alteration, or Repair)

OFFER ***(Must be fully completed by offeror)***

14. NAME AND ADDRESS OF OFFEROR *(Include ZIP Code)*	15. TELEPHONE NO. *(Include area code)*
	16. REMITTANCE ADDRESS *(Include only if different than Item 14)* **See Item 14**
CODE / FACILITY CODE	

17. The offeror agrees to perform the work required at the prices specified below in strict accordance with the terms of this solicitation, if this offer is accepted by the Government in writing within _____ calendar days after the date offers are due. *(Insert any number equal to or greater than the minimum requirements stated in Item 13D. Failure to insert any number means the offeror accepts the minimum in Item 13D.)*

AMOUNTS	SEE SCHEDULE OF PRICES

18. The offeror agrees to furnish any required performance and payment bonds.

19. ACKNOWLEDGMENT OF AMENDMENTS

(The offeror acknowledges receipt of amendments to the solicitation -- give number and date of each)

AMENDMENT NO.										
DATE										

20A. NAME AND TITLE OF PERSON AUTHORIZED TO SIGN OFFER *(Type or print)*	20B. SIGNATURE	20C. OFFER DATE

AWARD ***(To be completed by Government)***

21. ITEMS ACCEPTED:

22. AMOUNT	23. ACCOUNTING AND APPROPRIATION DATA

24. SUBMIT INVOICES TO ADDRESS SHOWN IN *(4 copies unless otherwise specified)*	**ITEM**	25. OTHER THAN FULL AND OPEN COMPETITION PURSUANT TO ☐ 10 U.S.C. 2304(c) ☐ 41 U.S.C. 253(c)
26. ADMINISTERED BY CODE		27. PAYMENT WILL BE MADE BY: CODE

CONTRACTING OFFICER WILL COMPLETE ITEM 28 OR 29 AS APPLICABLE

☐ 28. NEGOTIATED AGREEMENT *(Contractor is required to sign this document and return _ _ copies to issuing office.)* Contractor agrees to furnish and deliver all items or perform all work, requisitions identified on this form and any continuation sheets for the consideration stated in this contract. The rights and obligations of the parties to this contract shall be governed by (a) this contract award, (b) the solicitation, and (c) the clauses, representations, certifications, and specifications or incorporated by reference in or attached to this contract.

☐ 29. AWARD *(Contractor is not required to sign this document.)* Your offer on this solicitation, is hereby accepted as to the items listed. This award consummates the contract, which consists of (a) the Government solicitation and your offer, and (b) this contract award. No further contractual document is necessary.

30A. NAME AND TITLE OF CONTRACTOR OR PERSON AUTHORIZED TO SIGN *(Type or print)*		31A. NAME OF CONTRACTING OFFICER *(Type or print)* TEL: EMAIL:
30B. SIGNATURE	30C. DATE	31B. UNITED STATES OF AMERICA BY / 31C. AWARD DATE

Section 00010 - Solicitation Contract Form

NOTICE TO OFFERORS

NOTICE TO OFFERORS

HAND-CARRIED OR MAILED PROPOSALS:

All proposals must be clearly identified with the contractor's name and address. To ensure timely and proper handling, the lower left corner of the outermost wrapper should indicate the Request For Proposal No., Due Date of Proposal, Time by which Proposals are Due, and Title of Project.

The Government will not be responsible for proposals delivered to any location or to anyone other than those designated to receive proposals on its behalf as indicated below.

Proposals delivered by commercial carrier and those sent by U.S. Mail, including U.S. Express Mail, must be addressed as indicated below. Proposals shall not be addressed to any specific person.

U.S. Army Engineer District, Savannah
ATTN: CESAS-CT-C
100 West Oglethorpe Avenue
Savannah, Georgia 31401-3640

Mailroom personnel on the first floor of 100 West Oglethorpe Avenue must receive proposals sent by U.S. Mail or delivered by commercial carrier by the time specified in Block 13 of the SF1442 for receipt of proposals.

Offerors are cautioned that proposals sent via United States Postal Service Express Mail are first delivered to the Savannah District Post Office Box instead of 100 West Oglethorpe Avenue, "the office designated for receipt of proposals" therefore, allow sufficient mailing time.

Hand-carried proposals also must be delivered to mailroom personnel on the first floor of 100 West Oglethorpe Avenue by the time specified in Block 13 of SF1442 for receipt of proposals.

Offerors are cautioned that there is no parking in or around the building, therefore, when hand delivering proposals sufficient time should be allowed for transporting of proposal packages from your vehicle to mailroom personnel.

2. **FACSIMILE MODIFICATION OF PROPOSALS IS NOT AUTHORIZED**

3. QUALITY CONTROL SYSTEM (QCS)

Any contract award resulting for this solicitation will require the mandatory use of the automated Quality Control System. Please see section 01312A for additional.

ITEM NO	SUPPLIES/SERVICES	QUANTITY	UNIT	UNIT PRICE	AMOUNT
0001	BASE BID - Construction of TUAV Storage/Maintenance Complete to 5 Foot Building Line (FY-04), LI 57696)		Lump Sum	$_____	$_____

ITEM NO	SUPPLIES/SERVICES	QUANTITY	UNIT	UNIT PRICE	AMOUNT
0002	BASE BID - Site Preparation and Development Including Utilities (Everything Outside the 5 Foot Building Line, Complete, excluding Bid Options) (FY-04, LI 57696)		Lump Sum	$_____	$_____

ITEM NO	SUPPLIES/SERVICES	QUANTITY	UNIT	UNIT PRICE	AMOUNT
0003 OPTION	OPTION 1 - Provide concrete in lieu of asphalt for hardstand around building		Lump Sum	$_____	$_____

ITEM NO	SUPPLIES/SERVICES	QUANTITY	UNIT	UNIT PRICE	AMOUNT
0004 OPTION	OPTION 2 - Provide asphalt access road		Lump Sum	$_____	$_____

ITEM NO	SUPPLIES/SERVICES	QUANTITY	UNIT	UNIT PRICE	AMOUNT
0005			Lump Sum	$_____	$_____
OPTION	OPTION 3 - Provide CMU to 12' height on two interior walls				

Section 00100

INSTRUCTIONS, CONDITIONS, AND NOTICE TO OFFERORS

Tactical Unmanned Aerial Vehicle (TAUV) Storage/Maintenance Facility
Ft. Stewart, Georgia

LOWEST PRICE TECHNICALLY ACCEPTABLE (LPTA)

1. PROPOSAL OVERVIEW. This Request for Proposal (RFP) solicits the construction of a Tactical Unmanned Aerial Vehicle (TUAV) Storage/Maintenance facility, Ft. Stewart, Georgia. The contract will be a Lowest Price Technically Acceptable (LPTA). In as much as the proposal shall describe the capability of the Offeror to perform any resulting contract, the proposal should be specific and complete in every detail. The proposal should be prepared simply and economically, providing a straightforward and concise description of capabilities to satisfactorily perform the contract. The proposal should be practical, legible, clear, and coherent.

1.1 Proposal Submissions and the Lowest Price Technically Acceptable Process. This process requires potential contractors to submit their performance and capability information initially for review and consideration by the Government. Following the review, evaluation, and rating of these proposals, the Government will evaluate price proposals for contractors that have acceptable technical proposals. The technical information contained in the proposals shall be reviewed and evaluated by the Government in accordance with the evaluation criteria provided in paragraph 5 Evaluation Factors and Weights. The SSEB reviews, evaluates, and rates the proposals against the source selection criteria in the RFP. Price information will not be rated but will be evaluated in accordance with FAR Part 15, funding limitations set out in Section 0010 – Bid Schedule, and other Offeror's price proposals. Award will be made to that Offeror whose proposal is technically acceptable and has the lowest price that is determined to be fair and reasonable. The proposal for this low price technically acceptable procurement consiste of the following individual pieces:

- Pro Forma Information
- Price Proposal
- Proposal Data Sheet
- Offeror Past Performance Information (Completed Projects Customer Surveys)

2. PROPOSAL SUBMISSION INSTRUCTIONS

2.1 Who May Submit. Any legally organized Offeror may submit a proposal.

2.2 Where to Submit. Offerors shall submit their proposals to the Savannah District at the address shown in Block 7 of the Standard Form 1442.

2.3 Submission Deadline. Proposals shall be received by the Savannah District no later than the time and date specified in Block 13 of Standard Form 1442.

2.4 General Requirements.

2.4.1 In order to effectively and equitably evaluate all proposals, the Contracting Officer must receive information containing sufficient detail to allow review and evaluation by the Government. Proposal clarity, organization, and cross-referencing are mandatory. Failure to submit and organize proposals as requested may adversely affect an Offeror's evaluation. Offerors should provide sufficient detail and clearly define all items required in this section.

2.4.2 Tabs. Proposal shall be organized and tabbed as shown in paragraph 2.5 Submission Format.

2.4.3 Size of Printed Matter Submissions.

2.4.3.1 Written materials shall be prepared on 8-1/2" x 11" paper.

2.4.3.2 The proposals shall contain a detailed table of contents. If more than one binder is used, the complete table of contents shall be included in each. Any materials submitted but not required by the solicitation, (such as company brochures), shall be relegated to appendices.

2.4.4 Number of Copies. Offerors shall submit one (1) hard copy of Volume I and five (5) hard copies of Volume II of their Proposal. Both volumes shall also be submitted on a CD-ROM.

2.5 Submission Format.

2.5.1 The Proposal will be tabbed and submitted in a three ring binders in the following format:

VOLUME I: PRO FORMA REQUIREMENTS AND PRICE PROPOSAL

TAB A – SF 1442, completed and signed by an authorized person from the company or team

TAB B – Section 00010 – Supplies or Services and Price/Costs Schedule

TAB C – Section 00600 – Representations and Certifications

TAB D – PROPOSAL DATA SHEET – See the format provided in this Section. Ensure to include Offeror's telephone number, FAX number, e-mail address and DUNS number. Duns number will be used to accesses CCASS data. Joint Ventures (J-V) must submit a DUNS number for each member of the J-V. If a separate DUNS has been created for the J-V it must be submitted as well. Mentor-proteges are cautioned that only protégé past performance can be evaluated.

TAB E – Bid Bond

TAB F – Financial Information (e.g. Latest Financial Statement, Annual Reports, Dun and Bradstreet ratings and/or number, etc.)

TAB G – Subcontracting Plan – FOR LARGE BUSINESS OFFERORS ONLY. Subcontracting Plan shall be prepared in accordance with FAR 52.219-9. See Section 00800 for a sample plan and format.

NOTE: For the information of Large Business Offerors, Savannah District's assigned subcontracting goals are:

57.2% of planned subcontracting dollars placed with small business concerns

10.0% of planned subcontracting dollars placed with small disadvantaged business concerns

10.0% of planned subcontracting dollars placed with women owned small business concerns

3.0% of planned subcontracting dollars with HUBZone small business

3.0% of planned subcontracting dollars placed with service-disabled veteran-owned small business concerns

0.0% of planned subcontracting dollars placed with veteran-owned small business concerns. While Savannah District does not have a specific target for subcontracting with Veteran-Owned small businesses, this must be addressed in any subcontracting plan.

VOLUME II – Technical Proposal

THE TECHNICAL PROPOSAL SHALL NOT INCLUDE ANY COST INFORMATION.

TAB H – FACTOR 1: OFFEROR PAST PERFORMANCE

3. TECHNICAL PROPOSAL SUBMISSION REQUIREMENTS.

3.1 FACTOR 1: OFFEROR PAST PERFORMANCE (VOLUME II, TAB H). Offerors shall be evaluated on construction projects successfully completed or substantially completed in the last three years. The Offeror's past performance in completing projects during the last three years will be evaluated to determine technical capability to perform the proposed contract and how well it satisfied its customers. The information presented in the Offeror's submittal, together with that from other sources available to the Government will comprise the input for evaluation of this factor. The following elements will be evaluated:

3.1.1 Quality of Construction
3.1.2 Timeliness of Performance
3.1.3 Customer Satisfaction
3.1.4 Subcontractor Management

3.1.2 Offeror's Submission Requirements.

3.1.2.1 Past Performance Information Sheets. Offerors shall complete and provide a Past Performance Information Sheet on three projects described above. A sample Past Performance Information Sheet is included at the end of this section.

3.1.2.2 Past Performance Questionaires. Offeror's shall identify the completed projects (or substantially complete) as described above to be used for reference and evaluation purposes and provide a questionnaire to the Point of Contact for each project listed. A sample Past Performance Evaluation Questionnaire is included at the end of this section. When completed, these forms shall be mailed, faxed or e-mailed to the Savannah District Contract Specialist identified in the sample transmittal letter provided. It is the contractor's responsibility to ensure that the reference documentation is provided, as the Government may not make additional requests for past performance information from the references. The evaluation form shall be provided to the Savannah District Contract Specialist directly from the reference. Projects from which questionnaires are received shall have been completed or substantially completed within three years of the date of the solicitation.

3.1.2.3 Other Sources. The Government may contact sources other than those provided by the Offeror for information with respect to past performance. These other sources may include CCASS (Construction Contractor Appraisal Support System), telephone interviews with organizations familiar with the Offeror's performance, and Government personnel with personal knowledge of the Offeror's performance capability.

3.1.3 Evaluation. The Government will evaluate the Offeror's past performance using the sources available to it including but not limited to: the example projects identified by the Offeror, Past Performance Evaluation Questionnaires received, and CCASS. Offerors may be provided an opportunity to address any negative past performance information about which the Offeror has not previously had an opportunity to respond. The Government treats an Offeror's lack of past performance as having no positive or negative evaluation significance. The Government will evaluate past performance based on the elements listed below:

3.1.3.1 Quality of Construction. Based on information provided in the questionnaire and other information, the Government will assess the quality of the actual construction undertaken and the standards of workmanship exhibited by the Offeror's team.

3.1.3.2 Timeliness of Performance. The Government will evaluate all information available with respect to the Offeror completing past projects within the scheduled completion times.

3.1.3.3 Customer Satisfaction. The Government will evaluate all information available with respect to the Offeror's past customer satisfaction, cooperation with customers, and interaction on past projects.

3.1.3.4 Subcontractor Management. The Government will evaluate all information available with respect to the Offeror's management of subcontractors, including mitigation of conflicts and resolution of disputes at the lowest level.

3.1.3.5 Small and Small Disadvantaged Business Utilization. The Government will evaluate narratives provided for the following elements. Greater detail and specificity will be given greater credit than general statements and commitments:

3.1.3.5.1 The extent to which the goals for subcontracting with small and small disadvantaged businesses are realistic, justifiable, positive, and in accordance with the Government's policy to maximize opportunities for these types of businesses.

3.1.3.5.2 The extent to which small disadvantaged businesses, and where appropriate, historically black colleges and universities/minority institutions (HBCU/MI) have been identified for participation as part of the Offeror's team.

3.1.3.5.3 The Offeror's past commitment to providing subcontracting opportunities and encouragement to small and small disadvantaged businesses.

4. INDIVIDUAL PROPOSAL RATING WORKSHEETS

4.1 Worksheets are provided on the following pages that the evaluators will use to review and rate the individual proposals.

4.2 During the consensus evaluation, a single "consensus rating" worksheet shall be completed for each proposal and signed by all the evaluators. It is imperative that comments and supporting rationale for the rating assigned be included on the consensus sheet.

4.3 Comments are required to support all ratings.

5. OVERALL PROPOSAL EVALUATION

5.1 The Government evaluation team will consider all information provided in the proposal individually. Once these individual analyses are completed, the team will meet and determine a rating for each of the evaluation factors by consensus decision.

5.2 Following completion of the consensus rating, each propoals will be assigned a single overall GO or NO-GO rating. This final overall rating, along with ratings on individual factors, will be provided to the Contracting Officer/Source Selection Authority.

5.3 It is the responsibility of the Source Selection Board to provide and document sufficient strengths, weaknesses, and omissions to support the GO or NO-GO rating for each factor as well as the overall rating. Documentation/comments are required for all ratings.

6. RATING METHODOLOGY

6.1 Relative Importance Definition. For the purpose of this evaluation, proposals will be evaluated in each Evaluation Factor based on the following rating scheme:

6.1.1 Yes-No Ratings. Where the specific evaluation sheets indicate a YES-NO Rating these items shall be treated as information items. They are included in the evaluation worksheets to assure a similar focus among the evaluators and to ensure that individual evaluators do not overlook proposal information provided.

6.1.2 Go-No Go Ratings.

6.1.2.1 Go. The Technical proposal conforms completely to the solicitation requirements and presents low risk to the Government.

6.1.2.2. No-Go. The proposal does not meet the minimum levels of acceptability and presents an unacceptably high risk to the Government.

7. EXCEPTIONS. Exceptions to the contractual terms and conditions of the solicitation (e.g., standard company terms and conditions) may result in a determination to reject a proposal.

8. RESTRICTIONS. Failure to submit all the data in the format indicated in this section may be cause for determining a proposal incomplete and, therefore, not considered for evaluation, and for subsequent award.

9. BASIS FOR AWARD

10.1 Proposals must meet the criteria stated in the RFP in order to be eligible for award, to include responsiveness, technical acceptability and responsibility.

10.2 In order to determine which proposal represents the best overall value, the Government will compare technical proposals to one another. The Government will award a contract to the responsible Offeror whose technical submittal contains those criteria described in this document offering the lowest price to the Government.

10.3 The Government reserves the right to reject any and all offers.

10.4 Offerors are reminded to include their best technical and price terms in their initial offer and not to automatically assume that they will have an opportunity to participate in discussions or be asked to submit a revised offer. The Government may make award of a conforming proposal without discussions, if deemed to be within the best interests of the Government.

VOLUME I – TAB D
PROPOSAL DATA SHEET

PROJECT TITLE: Tactical Unmanned Aerial Vehicle (TUAV) Storage/Maintenance Facility
PROJECT LOCATION: Fort Stewart, Georgia

1. Name of Firm:
   Address:

   Phone:
   Fax:
   E-mail:
   Duns # (used for accessing CCASS)

If a joint venture or contractor-subcontractor association of firms, list the individual firms and briefly describe the nature of the association.

Firm 1:

Firm 2:

Firm 3:

Nature of Association:

2. AUTHORIZED NEGOTIATORS. FAR 52.215-11

The Offeror represents that the following persons are authorized to negotiate on its behalf with the Government in connection with this Request for Proposals (RFP).

[List names, titles, and telephone number of the authorized negotiator.]

Name of Person Authorized to Negotiate:

Negotiator's Address:

Negotiator's Telephone:

Negotiator’s E-mail:

TACTICAL UNMANNED AERIAL VEHICLE (TUAV) STORAGE/MAINTENANCE FACILITY

VOLUME II – TAB H

FACTOR 1: OFFEROR PAST PERFORMANCE INFORMATION
(Offerors should submit for at least three projects).

1. On an attached sheet, provide information for three completed or substantially complete projects, preferably of similar design or features that are being or have been constructed by the offeror to be used for reference and evaluation purposes. These should be the same projects for which questionnaires have been provided to the Procurement Point of Contact.

2. For each project provide the following information:

Project Title:

Location:

Contract number:

Procuring activity:

Procurement point of contact and telephone number:

List date of construction completion or percent completion if construction is underway:

Address of building(s):

Address and telephone number of owner:

Indicate type of project (private sector, Government, planned unit development, etc.):

General character:

Total cost:

Total cost of all modifications:

SAMPLE TRANSMITTAL LETTER
AND
PAST PERFORMANCE EVALUATION QUESTIONNAIRE

Date: _____

To: _____
_____
_____

We have listed your firm as a reference for work we have performed for you as listed below. Our firm has submitted a proposal under a project advertised by the U.S. Army Corps of Engineers, Savannah District. In accordance with Federal Acquisition Regulations (FAR), an evaluation of our firm's past performance will be completed by the Corps of Engineers. Your candid response to the attached questionnaire will assist the evaluation team in this process.

We understand that you have a busy schedule and your participation in this evaluation is greatly appreciated. Please complete the enclosed questionnaire as thoroughly as possible. Space is provided for comments. Understand that while the responses to this questionnaire may be released to the offeror, FAR 15.306 (e)(4) prohibits the release of the names of the persons providing the responses. Complete confidentiality will be maintained. Furthermore, a questionnaire has also been sent to _____ of your organization. Only one response from each office is required. If at all possible, we request that you individually answer this questionnaire and then coordinate your responses with that of _____, to develop a consensus on one overall response from your organization.

Please send your completed questionnaire to the following address to arrive NOT LATER THAN _____*[DATE]* _____:

U.S. Army Engineer District, Savannah
CESAS-CT-C (Amy Aqueche)
100 West Oglethorpe Street
Savannah, Georgia 31402

The questionnaires can also be faxed to Amy Aqueche, Savannah District Contract Specialist at FAX 912-652-5828 or emailed to amy.a.aqueche@sas02.usace.army.mil. If you have questions regarding the attached questionnaire, or require assistance, please contact Amy Aqueche at 912-652-5705. Thank you for your assistance.

TACTICAL UNMANNED AERIAL VEHICLE (TUAV) STORAGE/MAINTENANCE FACILITY
FT. STEWART, GEORGIA

PAST PERFORMANCE EVALUATION QUESTIONNAIRE

Upon completion of this form, please send directly to the U.S. Army Corps of Engineers in the enclosed addressed envelope or fax [or e-mail] to 912-652-5828, ATTN: Amy Aqueche. Do not return this form to our offices. Thank you.

1. Contractor/Name & Address (City and State):

2. Type of Contract: Fixed Price _____ Cost Reimbursement _____

Other (Specify) _____

3. Title of Project/Contract Number:
_____

_____

_____

4. Description of Work: (Attach additional pages as necessary)

5. Complexity of Work: High _____ Mid _____ Routine _____

6. Location of Work:_____

7. Date of Award: _____

8. Status: Active _____ (provide percent complete)

Complete _____ (provide completion date)

9. Name, address and telephone number of Contracting Officer's Technical Representative:

TACTICAL UNMANNED AERIAL VEHICLE (TUAV) STORAGE/MAINTANANCE FACILITY
FT. STEWART, GEORGIA

10. QUALITY OF CONSTRUCTION:

Evaluate the contractor's performance in complying with contract requirements, quality achieved and overall technical expertise demonstrated.

Outstanding Quality	
Above Average Quality	
Satisfactory Quality	
Marginal Quality	
Unsatisfactory or Experienced Significant Quality Problems	

Remarks: _____

_____

_____

_____

11. TIMELINESS OF PERFORMANCE:

To what extent did the contractor meet the contract and/or individual task order schedules if the contract was an indefinite delivery type contract?

Completed Substantially Ahead of Schedule (Outstanding)	
Completed Ahead of Schedule (Above Average)	
Completed on Schedule with Minor Delays Under Extenuating Circumstances (Satisfactory)	
Completed Behind Schedule (Marginal)	
Experienced Significant Delays without Justification (Unsatisfactory)	

Remarks: _____

_____

_____

TACTICAL UNMANNED AERIAL VEHICLE (TUAV) STORAGE/MAINTANANCE FACILITY
FT. STEWART, GEORGIA

12. CUSTOMER SATISFACTION:

To what extent were the end users satisfied with:

	Quality	Cost	Schedule
Exceptionally Satisfied (Outstanding)			
Highly Satisfied (Above Average)			
Satisfied (Satisfactory)			
Somewhat Dissatisfied (Marginal)			
Highly Dissatisfied (Unsatisfactory)			

Remarks: _____

_____

_____

_____

13. SUBCONTRACTOR MANAGEMENT

How well did the contractor manage and coordinate subcontractors, suppliers, and the labor force?

Outstanding management and coordination of subcontractors	
Above Average management and coordination of subcontractors	
Satisfactory management and coordination of subcontractors	
Marginal management and coordination of subcontractors	
Unsatisfactory management and coordination of subcontractors	

Remarks: _____

_____

_____

TACTICAL UNMANNED AERIAL VEHICLE (TUAV) STORAGE/MAINTANANCE FACILITY
FT. STEWART, GEORGIA

14. IF GIVEN THE OPPORTUNITY, WOULD YOU WORK WITH THIS CONTRACTOR AGAIN?

Yes _____ No _____ Not Sure _____

15. OTHER REMARKS:

Use the space below to provide other information related to the contractor's performance. This may include the contractor's selection and management of subcontractors, flexibility in dealing with contract challenges, their overall concern for the Government's interest (if applicable), project awards received, etc.

_____

_____

_____

_____

_____

_____

_____

_____

Offeror: _____

Evaluator: _____

TACTICAL UNMANNED AERIAL VEHICLE (TUAV) STORAGE/MAINTANANCE FACILITY
FT. STEWART, GEORGIA

PROPOSAL RATING WORKSHEET

FACTOR 1 – OFFEROR PAST PERFORMANCE

1. GENERAL. The Government will evaluate each Offeror's past performance to determine how well it satisfied its customers. Evaluators will use this factor to evaluate the success of the Offeror based on the satisfaction of previous customers and clients as illustrated on the completed questionnaires, CCASS Ratings and personal knowledge. These completed questionnaires shall be used as a basis to begin the evaluation of this factor.

Has Government Received Three Completed Questionnaires for this Offeror? _____ YES ____ NO

Do All the Questionnaires Received Reflect Projects Completed or substantially compete within the Last Three Years? _____ YES ____ NO

2. CCASS RATINGS. The Contract Specialist will provide CCASS Ratings for the Offeror (and any other firms if a joint venture is offered).

Firm Name: _____

Number of Ratings:	Outstanding	_____
	Above Average	_____
	Satisfactory	_____
	Marginal	_____
	Unsatisfactory	_____

3. OTHER INFORMATION CONSIDERED. List all other sources of information considered (telephone interviews, personnel interviews, personal experience, etc.)

Offeror: _____

Evaluator: _____

TACTICAL UNMANNED AERIAL VEHICLE (TUAV) STORAGE/MAINTANANCE FACILITY
FT. STEWART, GEORGIA

PROPOSAL RATING WORKSHEET

FACTOR 1 – OFFEROR PAST PERFORMANCE (Continued)

OVERALL RATING.

/__/ Outstanding

/__/ Above Average

/__ / Satisfactory

/__ / Marginal

/__ / Unsatisfactory

Comments to support the OVERALL RATING

STRENGTHS.

WEAKNESSES.

OTHER COMMENTS.

Offeror: _____

Evaluator: _____

TACTICAL UNMANNED AERIAL VEHICLE (TUAV) STORAGE/MAINTANANCE FACILITY
FT. STEWART, GEORGIA

Summary and Overall Rating

SUMMARY RATING CHART			
FACTOR No.	Description	Rating*	Comments
1	Offeror Past Performance		
OVERALL TECHNICAL RATING**			

* Ratings may be either:

Yes-No, Go-No Go, Go

** Evaluators shall consider the ratings and weights of the various criteria shown to determine a suitable overall rating. The overall rating cannot be an average, mode, or median of the ratings of the three factors.

Attach additional sheets to this rating summary to provide supporting rationale for assignment of ratings.

_____
Board Member Signature

Offeror _____ Board Chairperson_____

TACTICAL UNMANNED AERIAL VEHICLE (TUAV) STORAGE/MAINTANANCE FACILITY

FT. STEWART, GEORGIA

FACTOR No.	Description	Board Member 1	CONSENSUS	Comments
1	Offeror Past Performance*			
OVERALL RATING**				

_____
Board Member 1

Offeror: _____

TACTICAL UNMANNED AERIAL VEHICLE (TUAV) STORAGE/MAINTANANCE FACILITY

FT. STEWART, GEORGIA

CONSENSUS RATINGS

FACTOR 1 – OFFEROR PAST PERFORMANCE

STRENGTHS:

WEAKNESSES:

OTHER COMMENTS

CLAUSES INCORPORATED BY FULL TEXT

52.204-6 DATA UNIVERSAL NUMBERING SYSTEM (DUNS) NUMBER (OCT 2003)

(a) The offeror shall enter, in the block with its name and address on the cover page of its offer, the annotation "DUNS" or "DUNS+4" followed by the DUNS number or "DUNS+4" that identifies the offeror's name and address exactly as stated in the offer. The DUNS number is a nine-digit number assigned by Dun and Bradstreet, Inc. The DUNS+4 is the DUNS number plus a 4-character suffix that may be assigned at the discretion of the offeror to establish additional CCR records for identifying alternative Electronic Funds Transfer (EFT) accounts (see Subpart 32.11) for the same parent concern.

(b) If the offeror does not have a DUNS number, it should contact Dun and Bradstreet directly to obtain one.

(1) An offeror may obtain a DUNS number--

(i) If located within the United States, by calling Dun and Bradstreet at 1-866-705-5711 or via the Internet at http://www.dnb.com; or

(ii) If located outside the United States, by contacting the local Dun and Bradstreet office.

(2) The offeror should be prepared to provide the following information:

(i) Company legal business name.

(ii) Tradestyle, doing business, or other name by which your entity is commonly recognized.

(iii) Company physical street address, city, state and Zip Code.

(iv) Company mailing address, city, state and Zip Code (if separate from physical).

(v) Company telephone number.

(vi) Date the company was started.

(vii) Number of employees at your location.

(viii) Chief executive officer/key manager.

(ix) Line of business (industry).

(x) Company Headquarters name and address (reporting relationship within your entity).

(End of provision)

52.211-2 AVAILABILITY OF SPECIFICATIONS LISTED IN THE DOD INDEX OF SPECIFICATIONS AND STANDARDS (DODISS) AND DESCRIPTIONS LISTED IN THE ACQUISITION MANAGEMENT SYSTEMS AND DATA REQUIREMENTS CONTROL LIST, DOD 5010.12-L (DEC 2003)

Copies of specifications, standards, and data item descriptions cited in this solicitation may be obtained--

(a) From the ASSIST database via the Internet at http://assist.daps.dla.mil; or

(b) By submitting a request to the--Department of Defense Single Stock Point (DoDSSP), Building 4, Section D, 700 Robbins Avenue, Philadelphia, PA 19111-5094, Telephone (215) 697-2179, Facsimile (215) 697-1462.

(End of provision)

52.211-14 NOTICE OF PRIORITY RATING FOR NATIONAL DEFENSE USE (SEP 1990)

Any contract awarded as a result of this solicitation will be DO rated order certified for national defense use under the Defense Priorities and Allocations System (DPAS) (15 CFR 700), and the Contractor will be required to follow all of the requirements of this regulation. [Contracting Officer check appropriate box.]

(End of provision)

52.214-5000 APPARENT CLERICAL MISTAKES (MAR 1995)--EFARS

(a) For the purpose of initial evaluations of bids, the following will be utilized in the resolving arithmetic discrepancies found on the face of bidding schedule as submitted by the bidder:
(1) Obviously misplaced decimal points will be corrected;
(2) Discrepancy between unit price and extended price, the unit price will govern;
(3) Apparent errors in extension of unit prices will be corrected;
(4) Apparent errors in addition of lump-sum and extended prices will be corrected.
(b) For the purpose of bid evaluation, the government will proceed on the assumption that the bidder intends his bid to be evaluated on basis of the unit prices, the totals arrived at by resolution of arithmetic discrepancies as provided above and the bid will be so reflected on the abstract of bids.
(c) These correction procedures shall not be used to resolve any ambiguity concerning which bid is low.
(End of statement)

52.215-1 INSTRUCTIONS TO OFFERORS--COMPETITIVE ACQUISITION (JAN 2004)—ALTERNATE I (OCT 1997)

(a) Definitions. As used in this provision--

“Discussions” are negotiations that occur after establishment of the competitive range that may, at the Contracting Officer's discretion, result in the offeror being allowed to revise its proposal.

In writing, writing, or written” means any worded or numbered expression which can be read, reproduced, and later communicated, and includes electronically transmitted and stored information.

“Proposal modification” is a change made to a proposal before the solicitation's closing date and time, or made in response to an amendment, or made to correct a mistake at any time before award.

“Proposal revision” is a change to a proposal made after the solicitation closing date, at the request of or as allowed by a Contracting Officer as the result of negotiations.

“Time”, if stated as a number of days, is calculated using calendar days, unless otherwise specified, and will include Saturdays, Sundays, and legal holidays. However, if the last day falls on a Saturday, Sunday, or legal holiday, then the period shall include the next working day.

(b) Amendments to solicitations. If this solicitation is amended, all terms and conditions that are not amended remain unchanged. Offerors shall acknowledge receipt of any amendment to this solicitation by the date and time specified in the amendment(s).

(c) Submission, modification, revision, and withdrawal of proposals. (1) Unless other methods (e.g., electronic commerce or facsimile) are permitted in the solicitation, proposals and modifications to proposals shall be submitted in paper media in sealed envelopes or packages (i) addressed to the office specified in the solicitation, and (ii) showing the time and date specified for receipt, the solicitation number, and the name and address of the offeror. Offerors using commercial carriers should ensure that the proposal is marked on the outermost wrapper with the information in paragraphs (c)(1)(i) and (c)(1)(ii) of this provision.

(2) The first page of the proposal must show--

(i) The solicitation number;

(ii) The name, address, and telephone and facsimile numbers of the offeror (and electronic address if available);

(iii) A statement specifying the extent of agreement with all terms, conditions, and provisions included in the solicitation and agreement to furnish any or all items upon which prices are offered at the price set opposite each item;

(iv) Names, titles, and telephone and facsimile numbers (and electronic addresses if available) of persons authorized to negotiate on the offeror's behalf with the Government in connection with this solicitation; and

(v) Name, title, and signature of person authorized to sign the proposal. Proposals signed by an agent shall be accompanied by evidence of that agent's authority, unless that evidence has been previously furnished to the issuing office.

(3) Submission, modification, or revisions of proposals. (i) Offerors are responsible for submitting proposals, and any modifications, revisions, or withdrawals, so as to reach the Government office designated in the solicitation by the time specified in the solicitation. If no time is specified in the solicitation, the time for receipt is 4:30 p.m., local time, for the designated Government office on the date that proposal or revision is due.

(ii)(A) Any proposal, modification, or revision received at the Government office designated in the solicitation after the exact time specified for receipt of offers is “late” and will not be considered unless it is received before award is made, the Contracting Officer determines that accepting the late offer would not unduly delay the acquisition; and--

(1) If it was transmitted through an electronic commerce method authorized by the solicitation, it was received at the initial point of entry to the Government infrastructure not later than 5:00 p.m. one working day prior to the date specified for receipt of proposals; or

(2) There is acceptable evidence to establish that it was received at the Government installation designated for receipt of offers and was under the Government's control prior to the time set for receipt of offers; or

(3) It is the only proposal received.

(B) However, a late modification of an otherwise successful proposal that makes its terms more favorable to the Government, will be considered at any time it is received and may be accepted.

(iii) Acceptable evidence to establish the time of receipt at the Government installation includes the time/date stamp of that installation on the proposal wrapper, other documentary evidence of receipt maintained by the installation, or oral testimony or statements of Government personnel.

(iv) If an emergency or unanticipated event interrupts normal Government processes so that proposals cannot be received at the office designated for receipt of proposals by the exact time specified in the solicitation, and urgent Government requirements preclude amendment of the solicitation, the time specified for receipt of proposals will be deemed to be extended to the same time of day specified in the solicitation on the first work day on which normal Government processes resume.

(v) Proposals may be withdrawn by written notice received at any time before award. Oral proposals in response to oral solicitations may be withdrawn orally. If the solicitation authorizes facsimile proposals, proposals may be withdrawn via facsimile received at any time before award, subject to the conditions specified in the provision at 52.215-5, Facsimile Proposals. Proposals may be withdrawn in person by an offeror or an authorized representative, if the identity of the person requesting withdrawal is established and the person signs a receipt for the proposal before award.

(4) Unless otherwise specified in the solicitation, the offeror may propose to provide any item or combination of items.

(5) Offerors shall submit proposals in response to this solicitation in English, unless otherwise permitted by the solicitation, and in U.S. dollars, unless the provision at FAR 52.225-17, Evaluation of Foreign Currency Offers, is included in the solicitation.

(6) Offerors may submit modifications to their proposals at any time before the solicitation closing date and time, and may submit modifications in response to an amendment, or to correct a mistake at any time before award.

(7) Offerors may submit revised proposals only if requested or allowed by the Contracting Officer.

(8) Proposals may be withdrawn at any time before award. Withdrawals are effective upon receipt of notice by the Contracting Officer.

(d) Offer expiration date. Proposals in response to this solicitation will be valid for the number of days specified on the solicitation cover sheet (unless a different period is proposed by the offeror).

(e) Restriction on disclosure and use of data. Offerors that include in their proposals data that they do not want disclosed to the public for any purpose, or used by the Government except for evaluation purposes, shall--

(1) Mark the title page with the following legend: This proposal includes data that shall not be disclosed outside the Government and shall not be duplicated, used, or disclosed--in whole or in part--for any purpose other than to evaluate this proposal. If, however, a contract is awarded to this offeror as a result of--or in connection with-- the submission of this data, the Government shall have the right to duplicate, use, or disclose the data to the extent provided in the resulting contract. This restriction does not limit the Government's right to use information contained in this data if it is obtained from another source without restriction. The data subject to this restriction are contained in sheets [insert numbers or other identification of sheets]; and

(2) Mark each sheet of data it wishes to restrict with the following legend: Use or disclosure of data contained on this sheet is subject to the restriction on the title page of this proposal.

(f) Contract award. (1) The Government intends to award a contract or contracts resulting from this solicitation to the responsible offeror(s) whose proposal(s) represents the best value after evaluation in accordance with the factors and subfactors in the solicitation.

(2) The Government may reject any or all proposals if such action is in the Government's interest.

(3) The Government may waive informalities and minor irregularities in proposals received.

(4) The Government intends to evaluate proposals and award a contract after conducting discussions with offerors whose proposals have been determined to be within the competitive range. If the Contracting Officer determines that the number of proposals that would otherwise be in the competitive range exceeds the number at which an efficient competition can be conducted, the Contracting Officer may limit the number of proposals in the competitive range to the greatest number that will permit an efficient competition among the most highly rated proposals. Therefore, the offeror's initial proposal should contain the offeror's best terms from a price and technical standpoint.

(5) The Government reserves the right to make an award on any item for a quantity less than the quantity offered, at the unit cost or prices offered, unless the offeror specifies otherwise in the proposal.

(6) The Government reserves the right to make multiple awards if, after considering the additional administrative costs, it is in the Government's best interest to do so.

(7) Exchanges with offerors after receipt of a proposal do not constitute a rejection or counteroffer by the Government.

(8) The Government may determine that a proposal is unacceptable if the prices proposed are materially unbalanced between line items or subline items. Unbalanced pricing exists when, despite an acceptable total evaluated price, the price of one or more contract line items is significantly overstated or understated as indicated by the application of cost or price analysis techniques. A proposal may be rejected if the Contracting Officer determines that the lack of balance poses an unacceptable risk to the Government.

(9) If a cost realism analysis is performed, cost realism may be considered by the source selection authority in evaluating performance or schedule risk.

(10) A written award or acceptance of proposal mailed or otherwise furnished to the successful offeror within the time specified in the proposal shall result in a binding contract without further action by either party.

(11) If a post-award debriefing is given to requesting offerors, the Government shall disclose the following information, if applicable:

(i) The agency's evaluation of the significant weak or deficient factors in the debriefed offeror's offer.

(ii) The overall evaluated cost or price and technical rating of the successful and the debriefed offeror and past performance information on the debriefed offeror.

(iii) The overall ranking of all offerors, when any ranking was developed by the agency during source selection.

(iv) A summary of the rationale for award.

(v) For acquisitions of commercial items, the make and model of the item to be delivered by the successful offeror.

(vi) Reasonable responses to relevant questions posed by the debriefed offeror as to whether source-selection procedures set forth in the solicitation, applicable regulations, and other applicable authorities were followed by the agency.

(End of provision)

52.216-1 TYPE OF CONTRACT (APR 1984)

The Government contemplates award of a Firm Fixed-Price contract resulting from this solicitation.

(End of clause)

52.217-5 EVALUATION OF OPTIONS (JUL 1990)

Except when it is determined in accordance with FAR 17.206(b) not to be in the Government's best interests, the Government will evaluate offers for award purposes by adding the total price for all options to the total price for the basic requirement. Evaluation of options will not obligate the Government to exercise the option(s).

(End of provision)

52.219-4001 SUBCONTRACTING PLAN FOR SMALL BUSINESS CONCERNS

(JAN 2004 CESAS-CT)

(a) In accordance with FAR Clause 52.219-9, large businesses must submit a subcontracting plan. A sample subcontracting plan is located in Section 00800.

(b) The subcontracting targets (expressed in terms of percentages of total planned subcontracting dollars) of the Savannah District are as follows:

Small Business	-	57.2%
Small Disadvantaged Business	-	10.0%
HUBZone Small Business		3.0%
Women-Owned Business	-	10.0%
Veteran-Owned Small Business		0%*
Service-Disabled Veteran-Owned Small Business	-	3.0%**

If you cannot reach the above-stated targets, you must provide written justification with your subcontracting plan detailing the reasons you cannot meet the requirements.

*(c) While Savannah District does not have a specific target for subcontracting with Veteran-Owned small businesses, this must be addressed in any subcontracting plan.

**(d) Service-disabled Veteran-owned Small Business (SD/VOSB) is a composite of Veteran-Owned Small Business. The SD/VOSB target must be included in the Veteran-Owned small business target.

52.222-23 NOTICE OF REQUIREMENT FOR AFFIRMATIVE ACTION TO ENSURE EQUAL EMPLOYMENT OPPORTUNITY FOR CONSTRUCTION (FEB 1999)

(a) The offeror's attention is called to the Equal Opportunity clause and the Affirmative Action Compliance Requirements for Construction clause of this solicitation.

(b) The goals for minority and female participation, expressed in percentage terms for the Contractor's aggregate workforce in each trade on all construction work in the covered area, are as follows:

Goals for minority participation for each trade	Goals for female participation for each trade
29.8%	6.9%

These goals are applicable to all the Contractor's construction work performed in the covered area. If the Contractor performs construction work in a geographical area located outside of the covered area, the Contractor shall apply the goals established for the geographical area where the work is actually performed. Goals are published periodically in the Federal Register in notice form, and these notices may be obtained from any Office of Federal Contract Compliance Programs office.

(c) The Contractor's compliance with Executive Order 11246, as amended, and the regulations in 41 CFR 60-4 shall be based on (1) its implementation of the Equal Opportunity clause, (2) specific affirmative action obligations required by the clause entitled "Affirmative Action Compliance Requirements for Construction," and (3) its efforts to meet the goals. The hours of minority and female employment and training must be substantially uniform throughout the length of the contract, and in each trade. The Contractor shall make a good faith effort to employ

minorities and women evenly on each of its projects. The transfer of minority or female employees or trainees from Contractor to Contractor, or from project to project, for the sole purpose of meeting the Contractor's goals shall be a violation of the contract, Executive Order 11246, as amended, and the regulations in 41 CFR 60-4. Compliance with the goals will be measured against the total work hours performed.

(d) The Contractor shall provide written notification to the Deputy Assistant Secretary for Federal Contract Compliance, U.S. Department of Labor, within 10 working days following award of any construction subcontract in excess of $10,000 at any tier for construction work under the contract resulting from this solicitation. The notification shall list the --

(1) Name, address, and telephone number of the subcontractor;

(2) Employer's identification number of the subcontractor;

(3) Estimated dollar amount of the subcontract;

(4) Estimated starting and completion dates of the subcontract; and

(5) Geographical area in which the subcontract is to be performed.

(e) As used in this Notice, and in any contract resulting from this solicitation, the "covered area" is
[Contracting Officer shall insert description of the geographical areas where the contract is to be performed, giving the State, county, and city].

(End of provision)

52.225-10 NOTICE OF BUY AMERICAN ACT REQUIREMENT--CONSTRUCTION MATERIALS (MAY 2002)

(a) Definitions. Construction material, domestic construction material, and foreign construction material, as used in this provision, are defined in the clause of this solicitation entitled “Buy American Act --Construction Materials” (Federal Acquisition Regulation (FAR) clause 52.225-9).

(b) Requests for determinations of inapplicability. An offeror requesting a determination regarding the inapplicability of the Buy American Act should submit the request to the Contracting Officer in time to allow a determination before submission of offers. The offeror shall include the information and applicable supporting data required by paragraphs (c) and (d) of the clause at FAR 52.225-9 in the request. If an offeror has not requested a determination regarding the inapplicability of the Buy American Act before submitting its offer, or has not received a response to a previous request, the offeror shall include the information and supporting data in the offer.

(c) Evaluation of offers. (1) The Government will evaluate an offer requesting exception to the requirements of the Buy American Act, based on claimed unreasonable cost of domestic construction material, by adding to the offered price the appropriate percentage of the cost of such foreign construction material, as specified in paragraph (b)(3)(i) of the clause at FAR 52.225-9.

(2) If evaluation results in a tie between an offeror that requested the substitution of foreign construction material based on unreasonable cost and an offeror that did not request an exception, the Contracting Officer will award to the offeror that did not request an exception based on unreasonable cost.

(d) Alternate offers.

(1) When an offer includes foreign construction material not listed by the Government in this solicitation in paragraph (b)(2) of the clause at FAR 52.225-9, the offeror also may submit an alternate offer based on use of equivalent domestic construction material.

(2) If an alternate offer is submitted, the offeror shall submit a separate Standard Form 1442 for the alternate offer, and a separate price comparison table prepared in accordance with paragraphs (c) and (d) of the clause at FAR 52.225-9 for the offer that is based on the use of any foreign construction material for which the Government has not yet determined an exception applies.

(3) If the Government determines that a particular exception requested in accordance with paragraph (c) of the clause at FAR 52.225-9 does not apply, the Government will evaluate only those offers based on use of the equivalent domestic construction material, and the offeror shall be required to furnish such domestic construction material. An offer based on use of the foreign construction material for which an exception was requested--

(i) Will be rejected as nonresponsive if this acquisition is conducted by sealed bidding; or

(ii) May be accepted if revised during negotiations.

(End of provision)

52.232-4006 SUBJECT TO AVAILABILITY OF FUNDS STATEMENT (SEP 1999 SASCT) (Ref. AFARS 5101.602-2)

This is a high priority requirement as defined in Army Federal Acquisition Regulation (AFAR) Supplement 5101.602-2. Subject to the availability of funds, the accounting classification will be 2142050 408 8021 P60576960 3230 S09133. This statement is not a commitment of funds. Funds are not presently available for this acquisition. No contract award will be made until appropriated funds are made available from which payment for contract purposes can be made.
(End of provision)

52.233-2 SERVICE OF PROTEST (AUG 1996)

(a) Protests, as defined in section 33.101 of the Federal Acquisition Regulation, that are filed directly with an agency, and copies of any protests that are filed with the General Accounting Office (GAO), shall be served on the Contracting Officer (addressed as follows) by obtaining written and dated acknowledgment of receipt from

U.S. Army Engineer District, Savannah
Attn: CESAS-CT-C
100 W. Oglethorpe Avenue
Savannah, Georgia 31401-3640

(b) The copy of any protest shall be received in the office designated above within one day of filing a protest with the GAO.

(End of provision)

52.236-27 SITE VISIT (CONSTRUCTION) (FEB 1995)

(a) The clauses at 52.236-2, Differing Site Conditions, and 52.236-3, Site Investigations and Conditions Affecting the Work, will be included in any contract awarded as a result of this solicitation. Accordingly, offerors or quoters are urged and expected to inspect the site where the work will be performed.

(b) Site visits may be arranged during normal duty hours by contacting:

Name:	James Thomas
Address:	Commander, 3ID (Mech) and Ft. Stewart Attn: Director of Public Works (James Thomas) 1117 Frank Cochran Drive Fort Stewart, Georgia 31314
Telephone:	912-767-6699

(End of provision)

52.236-28 PREPARATION OF PROPOSALS--CONSTRUCTION (OCT 1997)

(a) Proposals must be (1) submitted on the forms furnished by the Government or on copies of those forms, and (2) manually signed. The person signing a proposal must initial each erasure or change appearing on any proposal form.

(b) The proposal form may require offerors to submit proposed prices for one or more items on various bases, including--

(1) Lump sum price;

(2) Alternate prices;

(3) Units of construction; or

(4) Any combination of paragraphs (b)(1) through (b)(3) of this provision.

(c) If the solicitation requires submission of a proposal on all items, failure to do so may result in the proposal being rejected without further consideration. If a proposal on all items is not required, offerors should insert the words “no proposal” in the space provided for any item on which no price is submitted.

(d) Alternate proposals will not be considered unless this solicitation authorizes their submission.

(End of provision)

52.236-4011 Disclosure of Magnitude of Construction (FAR 36.204 and DFARS 236.204)

The estimated price range for this project is between $1,000,000 to $5,000,000.

Section 00600 - Representations & Certifications

CLAUSES INCORPORATED BY FULL TEXT

52.203-2 CERTIFICATE OF INDEPENDENT PRICE DETERMINATION (APR 1985)

(a) The offeror certifies that --

(1) The prices in this offer have been arrived at independently, without, for the purpose of restricting competition, any consultation, communication, or agreement with any other offeror or competitor relating to –

(i) Those prices,

(ii) The intention to submit an offer, or

(iii) The methods of factors used to calculate the prices offered:

(2) The prices in this offer have not been and will not be knowingly disclosed by the offeror, directly or indirectly, to any other offeror or competitor before bid opening (in the case of a sealed bid solicitation) or contract award (in the case of a negotiated solicitation) unless otherwise required by law; and

(3) No attempt has been made or will be made by the offeror to induce any other concern to submit or not to submit an offer for the purpose of restricting competition.

(b) Each signature on the offer is considered to be a certification by the signatory that the signatory --

(1) Is the person in the offeror's organization responsible for determining the prices offered in this bid or proposal, and that the signatory has not participated and will not participate in any action contrary to subparagraphs (a)(1) through (a)(3) of this provision; or

(2) (i) Has been authorized, in writing, to act as agent for the following principals in certifying that those principals have not participated, and will not participate in any action contrary to subparagraphs (a)(1) through (a)(3) of this provison _____ (insert full name of person(s) in the offeror's organization responsible for determining the prices offered in this bid or proposal, and the title of his or her position in the offeror's organization);

(ii) As an authorized agent, does certify that the principals named in subdivision (b)(2)(i) above have not participated, and will not participate, in any action contrary to subparagraphs (a)(1) through (a)(3) above; and

(iii) As an agent, has not personally participated, and will not participate, in any action contrary to subparagraphs (a)(1) through (a)(3) of this provision.

(c) If the offeror deletes or modifies subparagraph (a)(2) of this provision, the offeror must furnish with its offer a signed statement setting forth in detail the circumstances of the disclosure.

(End of clause)

52.203-11 CERTIFICATION AND DISCLOSURE REGARDING PAYMENTS TO INFLUENCE CERTAIN FEDERAL TRANSACTIONS (APR 1991)

(a) The definitions and prohibitions contained in the clause, at FAR 52.203-12, Limitation on Payments to Influence

Certain Federal Transactions, included in this solicitation, are hereby incorporated by reference in paragraph (b) of this Certification.

(b) The offeror, by signing its offer, hereby certifies to the best of his or her knowledge and belief that on or after December 23, 1989,--

(1) No Federal appropriated funds have been paid or will be paid to any person for influencing or attempting to influence an officer or employee of any agency, a Member of Congress, an officer or employee of Congress, or an employee of a Member of Congress on his or her behalf in connection with the awarding of any Federal contract, the making of any Federal grant, the making of any Federal loan, the entering into of any cooperative agreement, and the extension, continuation, renewal, amendment or modification of any Federal contract, grant, loan, or cooperative agreement;

(2) If any funds other than Federal appropriated funds (including profit or fee received under a covered Federal transaction) have been paid, or will be paid to any person for influencing or attempting to influence an officer or employee of any agency, a Member of Congress, an officer or employee of Congress or an employee of a Member of Congress on his or her behalf in connection with this solicitation, the offeror shall complete and submit, with its offer, OMB standard form LLL, Disclosure of Lobbying Activities, to the Contracting Officer; and

(3) He or she will include the language of this certification in all subcontract awards at any tier and require that all recipients of subcontract awards in excess of $100,000 shall certify and disclose accordingly.

52 Submission of this certification and disclosure is a prerequisite for making or entering into this contract imposed by section 1352, title 31, United States Code. Any person who makes an expenditure prohibited under this provision, shall be subject to a civil penalty of not less than $10,000, and not more than $100,000, for each such failure.

(End of provision)

52.204-5 WOMEN-OWNED BUSINESS (OTHER THAN SMALL BUSINESS) (MAY 1999)

(a) Definition. Women-owned business concern, as used in this provision, means a concern that is at least 51 percent owned by one or more women; or in the case of any publicly owned business, at least 51 percent of its stock is owned by one or more women; and whose management and daily business operations are controlled by one or more women.

(b) Representation. [Complete only if the offeror is a women-owned business concern and has not represented itself as a small business concern in paragraph (b)(1) of FAR 52.219-1, Small Business Program Representations, of this solicitation.] The offeror represents that it ( ) is a women-owned business concern.

(End of provision)

52.204-4003 TAXPAYER IDENTIFICATION

Taxpayer Identification Number (TIN),” as used in this provision, means the number required by the Internal Revenue Service (IRS) to be used by the offeror in reporting income tax and other returns. The TIN may be either a Social Security Number or an Employer Identification Number.

(a) Taxpayer Identification Number (TIN).

___ TIN:._____

___ TIN has been applied for.

___ TIN is not required because:

___ Offeror is a nonresident alien, foreign corporation, or foreign partnership that does not have income effectively connected with the conduct of a trade or business in the United States and does not have an office or place of business or a fiscal paying agent in the United States;

___ Offeror is an agency or instrumentality of a foreign government;

___ Offeror is an agency or instrumentality of the Federal Government.

(b) Type of organization.

___ Sole proprietorship;

___ Partnership;

___ Corporate entity (not tax-exempt);

___ Corporate entity (tax-exempt);

___ Government entity (Federal, State, or local);

___ Foreign government;

___ International organization per 26 CFR 1.6049-4;

___ Other _____

(c) Common parent.

___ Offeror is not owned or controlled by a common parent

___ Name and TIN of common parent:

Name _____

TIN _____

(End of provision)

52.209-5 CERTIFICATION REGARDING DEBARMENT, SUSPENSION, PROPOSED DEBARMENT, AND OTHER RESPONSIBILITY MATTERS (DEC 2001)

(a)(1) The Offeror certifies, to the best of its knowledge and belief, that-

(i) The Offeror and/or any of its Principals-

(A) Are ( ) are not ( ) presently debarred, suspended, proposed for debarment, or declared ineligible for the award of contracts by any Federal agency;

(B) Have ( ) have not ( ), within a three-year period preceding this offer, been convicted of or had a civil judgment rendered against them for: commission of fraud or a criminal offense in connection with obtaining, attempting to obtain, or performing a public (Federal, state, or local) contract or subcontract; violation of Federal or state antitrust statutes relating to the submission of offers; or commission of embezzlement, theft, forgery, bribery, falsification or destruction of records, making false statements, tax evasion, or receiving stolen property; and

(C) Are ( ) are not ( ) presently indicted for, or otherwise criminally or civilly charged by a governmental entity with, commission of any of the offenses enumerated in paragraph (a)(1)(i)(B) of this provision.

(ii) The Offeror has ( ) has not ( ), within a three-year period preceding this offer, had one or more contracts terminated for default by any Federal agency.

(2) "Principals," for the purposes of this certification, means officers; directors; owners; partners; and, persons having primary management or supervisory responsibilities within a business entity (e.g., general manager; plant manager; head of a subsidiary, division, or business segment, and similar positions).

This Certification Concerns a Matter Within the Jurisdiction of an Agency of the United States and the Making of a False, Fictitious, or Fraudulent Certification May Render the Maker Subject to Prosecution Under Section 1001, Title 18, United States Code.

(b) The Offeror shall provide immediate written notice to the Contracting Officer if, at any time prior to contract award, the Offeror learns that its certification was erroneous when submitted or has become erroneous by reason of changed circumstances.

(c) A certification that any of the items in paragraph (a) of this provision exists will not necessarily result in withholding of an award under this solicitation. However, the certification will be considered in connection with a determination of the Offeror's responsibility. Failure of the Offeror to furnish a certification or provide such additional information as requested by the Contracting Officer may render the Offeror nonresponsible.

(d) Nothing contained in the foregoing shall be construed to require establishment of a system of records in order to render, in good faith, the certification required by paragraph (a) of this provision. The knowledge and information of an Offeror is not required to exceed that which is normally possessed by a prudent person in the ordinary course of business dealings.

(e) The certification in paragraph (a) of this provision is a material representation of fact upon which reliance was placed when making award. If it is later determined that the Offeror knowingly rendered an erroneous certification, in addition to other remedies available to the Government, the Contracting Officer may terminate the contract resulting from this solicitation for default.

(End of provision)

52.219-1 SMALL BUSINESS PROGRAM REPRESENTATIONS (MAY 2004) - ALTERNATE I (APR 2002)

(a)(1) The North American Industry Classification System (NAICS) code for this acquisition is 236220.

(2) The small business size standard is 28.5 Million.

(3) The small business size standard for a concern which submits an offer in its own name, other than on a construction or service contract, but which proposes to furnish a product which it did not itself manufacture, is 500 employees.

(b) Representations. (1) The offeror represents as part of its offer that it ( ) is, ( ) is not a small business concern.

(2) (Complete only if the offeror represented itself as a small business concern in paragraph (b)(1) of this provision.) The offeror represents, for general statistical purposes, that it ( ) is, ( ) is not a small disadvantaged business concern as defined in 13 CFR 124.1002.

(3) (Complete only if the offeror represented itself as a small business concern in paragraph (b)(1) of this provision.) The offeror represents as part of its offer that it ( ) is, ( ) is not a women-owned small business concern.

(4) (Complete only if the offeror represented itself as a small business concern in paragraph (b)(1) of this provision.) The offeror represents as part of its offer that it ( ) is, ( ) is not a veteran-owned small business concern.

(5) (Complete only if the offeror represented itself as a veteran-owned small business concern in paragraph (b)(4) of this provision.) The offeror represents as part of its offer that it ( ) is, ( ) is not a service-disabled veteran-owned small business concern.

(6) [Complete only if the offeror represented itself as a small business concern in paragraph (b)(1) of this provision.] The offeror represents, as part of its offer, that--

(i) It ( ) is, ( ) is not a HUBZone small business concern listed, on the date of this representation, on the List of Qualified HUBZone Small Business Concerns maintained by the Small Business Administration, and no material change in ownership and control, principal office, or HUBZone employee percentage has occurred since it was certified by the Small Business Administration in accordance with 13 CFR part 126; and

(ii) It ( ) is, ( ) is not a joint venture that complies with the requirements of 13 CFR part 126, and the representation in paragraph (b)(6)(i) of this provision is accurate for the HUBZone small business concern or concerns that are participating in the joint venture. (The offeror shall enter the name or names of the HUBZone small business concern or concerns that are participating in the joint venture:_____.) Each HUBZone small business concern participating in the joint venture shall submit a separate signed copy of the HUBZone representation.

(7) (Complete if offeror represented itself as disadvantaged in paragraph (b)(2) of this provision.) The offeror shall check the category in which its ownership falls:

____ Black American.

____ Hispanic American.

____ Native American (American Indians, Eskimos, Aleuts, or Native Hawaiians).

____ Asian-Pacific American (persons with origins from Burma, Thailand, Malaysia, Indonesia, Singapore, Brunei, Japan, China, Taiwan, Laos, Cambodia (Kampuchea), Vietnam, Korea, The Philippines, U.S. Trust Territory of the Pacific Islands (Republic of Palau), Republic of the Marshall Islands, Federated States of Micronesia, the Commonwealth of the Northern Mariana Islands, Guam, Samoa, Macao, Hong Kong, Fiji, Tonga, Kiribati, Tuvalu, or Nauru).

____ Subcontinent Asian (Asian-Indian) American (persons with origins from India, Pakistan, Bangladesh, Sri Lanka, Bhutan, the Maldives Islands, or Nepal).

____ Individual/concern, other than one of the preceding.

(c) Definitions. As used in this provision--

Service-disabled veteran-owned small business concern--

(1) Means a small business concern--

(i) Not less than 51 percent of which is owned by one or more service-disabled veterans or, in the case of any publicly owned business, not less than 51 percent of the stock of which is owned by one or more service-disabled veterans; and

(ii) The management and daily business operations of which are controlled by one or more service-disabled veterans or, in the case of a service-disabled veteran with permanent and severe disability, the spouse or permanent caregiver of such veteran.

(2) Service-disabled veteran means a veteran, as defined in 38 U.S.C. 101(2), with a disability that is service-connected, as defined in 38 U.S.C. 101(16).

"Small business concern," means a concern, including its affiliates, that is independently owned and operated, not dominant in the field of operation in which it is bidding on Government contracts, and qualified as a small business under the criteria in 13 CFR Part 121 and the size standard in paragraph (a) of this provision.

Veteran-owned small business concern means a small business concern--

(1) Not less than 51 percent of which is owned by one or more veterans (as defined at 38 U.S.C. 101(2)) or, in the case of any publicly owned business, not less than 51 percent of the stock of which is owned by one or more veterans; and

(2) The management and daily business operations of which are controlled by one or more veterans.

"Women-owned small business concern," means a small business concern --

(1) That is at least 51 percent owned by one or more women or, in the case of any publicly owned business, at least 51 percent of the stock of which is owned by one or more women; or

(2) Whose management and daily business operations are controlled by one or more women.

(d) Notice.

(1) If this solicitation is for supplies and has been set aside, in whole or in part, for small business concerns, then the clause in this solicitation providing notice of the set-aside contains restrictions on the source of the end items to be furnished.

(2) Under 15 U.S.C. 645(d), any person who misrepresents a firm's status as a small, HUBZone small, small disadvantaged, or women-owned small business concern in order to obtain a contract to be awarded under the preference programs established pursuant to section 8(a), 8(d), 9, or 15 of the Small Business Act or any other provision of Federal law that specifically references section 8(d) for a definition of program eligibility, shall--

(i) Be punished by imposition of fine, imprisonment, or both;

(ii) Be subject to administrative remedies, including suspension and debarment; and

(iii) Be ineligible for participation in programs conducted under the authority of the Act.

(End of provision)

52.219-19 SMALL BUSINESS CONCERN REPRESENTATION FOR THE SMALL BUSINESS COMPETITIVENESS DEMONSTRATION PROGRAM (OCT 2000)

(a) Definition.

"Emerging small business" as used in this solicitation, means a small business concern whose size is no greater than 50 percent of the numerical size standard applicable to the North American Industry Classification System (NAICS) code assigned to a contracting opportunity.

(b) [Complete only if the Offeror has represented itself under the provision at 52.219-1 as a small business concern under the size standards of this solicitation.] The Offeror [ ] is, [ ] is not an emerging small business.

(c) (Complete only if the Offeror is a small business or an emerging small business, indicating its size range.)

Offeror's number of employees for the past 12 months (check this column if size standard stated in solicitation is expressed in terms of number of employees) or Offeror's average annual gross revenue for the last 3 fiscal years (check this column if size standard stated in solicitation is expressed in terms of annual receipts). (Check one of the following.)

No. of Employees	Avg. Annual Gross Revenues
____ 50 or fewer	____ $1 million or less
____ 51 - 100	____ $1,000,001 - $2 million
____ 101 - 250	____ $2,000,001 - $3.5 million
____ 251 - 500	____ $3,500,001 - $5 million
____ 501 - 750	____ $5,000,001 - $10 million
____ 751 - 1,000	____ $10,000,001 - $17 million
____ Over 1,000	____ Over $17 million

(End of provision)

52.222-22 PREVIOUS CONTRACTS AND COMPLIANCE REPORTS (FEB 1999)

The offeror represents that --

(a) ( ) It has, ( ) has not participated in a previous contract or subcontract subject to the Equal Opportunity clause of this solicitation;

(b) ( ) It has, ( ) has not, filed all required compliance reports; and

(c) Representations indicating submission of required compliance reports, signed by proposed subcontractors, will be obtained before subcontract awards.

(End of provision)

52.222-38 COMPLIANCE WITH VETERANS' EMPLOYMENT REPORTING REQUIREMENTS (DEC 2001)

By submission of its offer, the offeror represents that, if it is subject to the reporting requirements of 38 U.S.C. 4212(d) (i.e., if it has any contract containing Federal Acquisition Regulation clause 52.222-37, Employment Reports on Special Disabled Veterans, Veterans of the Vietnam Era, and Other Eligible Veterans), it has submitted the most recent VETS-100 Report required by that clause.

(End of provision)

52.223-4 RECOVERED MATERIAL CERTIFICATION (OCT 1997)

As required by the Resource Conservation and Recovery Act of 1976 (42 U.S.C. 6962(c)(3)(A)(i)), the offeror certifies, by signing this offer, that the percentage of recovered materials to be used in the performance of the contract will be at least the amount required by the applicable contract specifications.

(End of provision)

52.223-13 CERTIFICATION OF TOXIC CHEMICAL RELEASE REPORTING (AUG 2003)

(a) Executive Order 13148, of April 21, 2000, Greening the Government through Leadership in Environmental Management, requires submission of this certification as a prerequisite for contract award.

(b) By signing this offer, the offeror certifies that--

(1) As the owner or operator of facilities that will be used in the performance of this contract that are subject to the filing and reporting requirements described in section 313 of the Emergency Planning and Community Right-to-Know Act of 1986 (EPCRA) (42 U.S.C. 11023) and section 6607 of the Pollution Prevention Act of 1990 (PPA) (42 U.S.C. 13106), the offeror will file and continue to file for such facilities for the life of the contract the Toxic Chemical Release Inventory Form (Form R) as described in sections 313(a) and (g) of EPCRA and section 6607 of PPA; or

(2) None of its owned or operated facilities to be used in the performance of this contract is subject to the Form R filing and reporting requirements because each such facility is exempt for at least one of the following reasons: (Check each block that is applicable.)

( ) (i) The facility does not manufacture, process, or otherwise use any toxic chemicals listed in 40 CFR 372.65;

( ) (ii) The facility does not have 10 or more full-time employees as specified in section 313.(b)(1)(A) of EPCRA 42 U.S.C. 11023(b)(1)(A);

( ) (iii) The facility does not meet the reporting thresholds of toxic chemicals established under section 313(f) of EPCRA, 42 U.S.C. 11023(f) (including the alternate thresholds at 40 CFR 372.27, provided an appropriate certification form has been filed with EPA);

( ) (iv) The facility does not fall within the following Standard Industrial Classification (SIC) codes or their corresponding North American Industry Classification System sectors:

(A) Major group code 10 (except 1011, 1081, and 1094.

(B) Major group code 12 (except 1241).

(C) Major group codes 20 through 39.

(D) Industry code 4911, 4931, or 4939 (limited to facilities that combust coal and/or oil for the purpose of generating power for distribution in commerce).

(E) Industry code 4953 (limited to facilities regulated under the Resource Conservation and Recovery Act, Subtitle C (42 U.S.C. 6921, et seq.), 5169, 5171, or 7389 (limited to facilities primarily engaged in solvent recovery services on a contract or fee basis); or

( ) (v) The facility is not located within the United States or its outlying areas.

(End of clause)

252.209-7001 DISCLOSURE OF OWNERSHIP OR CONTROL BY THE GOVERNMENT OF A TERRORIST COUNTRY (MAR 1998)

(a) "Definitions."

As used in this provision --

(a) "Government of a terrorist country" includes the state and the government of a terrorist country, as well as any political subdivision, agency, or instrumentality thereof.

(2) "Terrorist country" means a country determined by the Secretary of State, under section 6(j)(1)(A) of the Export Administration Act of 1979 (50 U.S.C. App. 2405(j)(i)(A)), to be a country the government of which has repeatedly provided support for such acts of international terrorism. As of the date of this provision, terrorist countries include: Cuba, Iran, Iraq, Libya, North Korea, Sudan, and Syria.

(3) "Significant interest" means --

(i) Ownership of or beneficial interest in 5 percent or more of the firm's or subsidiary's securities. Beneficial interest includes holding 5 percent or more of any class of the firm's securities in "nominee shares," "street names," or some other method of holding securities that does not disclose the beneficial owner;

(ii) Holding a management position in the firm, such as a director or officer;

(iii) Ability to control or influence the election, appointment, or tenure of directors or officers in the firm;

(iv) Ownership of 10 percent or more of the assets of a firm such as equipment, buildings, real estate, or other tangible assets of the firm; or

(v) Holding 50 percent or more of the indebtness of a firm.

(b) "Prohibition on award."

In accordance with 10 U.S.C. 2327, no contract may be awarded to a firm or a subsidiary of a firm if the government of a terrorist country has a significant interest in the firm or subsidiary or, in the case of a subsidiary, the firm that owns the subsidiary, unless a waiver is granted by the Secretary of Defense.

(c) "Disclosure."

If the government of a terrorist country has a significant interest in the Offeror or a subsidiary of the Offeror, the Offeror shall disclosure such interest in an attachment to its offer. If the Offeror is a subsidiary, it shall also disclose any significant interest the government of a terrorist country has in any firm that owns or controls the subsidiary. The disclosure shall include --

(1) Identification of each government holding a significant interest; and

(2) A description of the significant interest held by each government.

(End of provision)

252.247-7022 REPRESENTATION OF EXTENT OF TRANSPORTATION BY SEA (AUG 1992)

(a) The Offeror shall indicate by checking the appropriate blank in paragraph (b) of this provision whether transportation of supplies by sea is anticipated under the resultant contract. The term supplies is defined in the Transportation of Supplies by Sea clause of this solicitation.

(b) Representation. The Offeror represents that it:

____ (1) Does anticipate that supplies will be transported by sea in the performance of any contract or subcontract resulting from this solicitation.

____ (2) Does not anticipate that supplies will be transported by sea in the performance of any contract or subcontract resulting from this solicitation.

(c) Any contract resulting from this solicitation will include the Transportation of Supplies by Sea clause. If the Offeror represents that it will not use ocean transportation, the resulting contract will also include the Defense FAR Supplement clause at 252.247-7024, Notification of Transportation of Supplies by Sea.

(End of provision)

Section 00700 - Contract Clauses

CLAUSES INCORPORATED BY FULL TEXT

52.202-1 DEFINITIONS (JUL 2004)

(a) When a solicitation provision or contract clause uses a word or term that is defined in the Federal Acquisition Regulation (FAR), the word or term has the same meaning as the definition in FAR 2.101 in effect at the time the solicitation was issued, unless--

(1) The solicitation, or amended solicitation, provides a different definition;

(2) The contracting parties agree to a different definition;

(3) The part, subpart, or section of the FAR where the provision or clause is prescribed provides a different meaning; or

(4) The word or term is defined in FAR Part 31, for use in the cost principles and procedures.

(b) The FAR Index is a guide to words and terms the FAR defines and shows where each definition is located. The FAR Index is available via the Internet at http://www.acqnet.gov at the end of the FAR, after the FAR Appendix.

(End of clause)

52.203-3 GRATUITIES (APR 1984)

(a) The right of the Contractor to proceed may be terminated by written notice if, after notice and hearing, the agency head or a designee determines that the Contractor, its agent, or another representative--

(1) Offered or gave a gratuity (e.g., an entertainment or gift) to an officer, official, or employee of the Government; and

(2) Intended, by the gratuity, to obtain a contract or favorable treatment under a contract.

(b) The facts supporting this determination may be reviewed by any court having lawful jurisdiction.

(c) If this contract is terminated under paragraph (a) of this clause, the Government is entitled--

(1) To pursue the same remedies as in a breach of the contract; and

(2) In addition to any other damages provided by law, to exemplary damages of not less than 3 nor more than 10 times the cost incurred by the Contractor in giving gratuities to the person concerned, as determined by the agency head or a designee. (This subparagraph (c)(2) is applicable only if this contract uses money appropriated to the Department of Defense.)

(d) The rights and remedies of the Government provided in this clause shall not be exclusive and are in addition to any other rights and remedies provided by law or under this contract.

(End of clause)

52.203-5 COVENANT AGAINST CONTINGENT FEES (APR 1984)

(a) The Contractor warrants that no person or agency has been employed or retained to solicit or obtain this contract upon an agreement or understanding for a contingent fee, except a bona fide employee or agency. For breach or violation of this warranty, the Government shall have the right to annul this contract without liability or, in its discretion, to deduct from the contract price or consideration, or otherwise recover, the full amount of the contingent fee.

(b) "Bona fide agency," as used in this clause, means an established commercial or selling agency, maintained by a contractor for the purpose of securing business, that neither exerts nor proposes to exert improper influence to solicit or obtain Government contracts nor holds itself out as being able to obtain any Government contract or contracts through improper influence.

"Bona fide employee," as used in this clause, means a person, employed by a contractor and subject to the contractor's supervision and control as to time, place, and manner of performance, who neither exerts nor proposes to exert improper influence to solicit or obtain Government contracts nor holds out as being able to obtain any Government contract or contracts through improper influence.

"Contingent fee," as used in this clause, means any commission, percentage, brokerage, or other fee that is contingent upon the success that a person or concern has in securing a Government contract.

"Improper influence," as used in this clause, means any influence that induces or tends to induce a Government employee or officer to give consideration or to act regarding a Government contract on any basis other than the merits of the matter.

(End of clause)

52.203-6 RESTRICTIONS ON SUBCONTRACTOR SALES TO THE GOVERNMENT (JUL 1995)

(a) Except as provided in (b) of this clause, the Contractor shall not enter into any agreement with an actual or prospective subcontractor, nor otherwise act in any manner, which has or may have the effect of restricting sales by such subcontractors directly to the Government of any item or process (including computer software) made or furnished by the subcontractor under this contract or under any follow-on production contract.

(b) The prohibition in (a) of this clause does not preclude the Contractor from asserting rights that are otherwise authorized by law or regulation.

(c) The Contractor agrees to incorporate the substance of this clause, including this paragraph (c), in all subcontracts under this contract which exceed $100,000.

52.203-7 ANTI-KICKBACK PROCEDURES. (JUL 1995)

(a) Definitions.

"Kickback," as used in this clause, means any money, fee, commission, credit, gift, gratuity, thing of value, or compensation of any kind which is provided, directly or indirectly, to any prime Contractor, prime Contractor employee, subcontractor, or subcontractor employee for the purpose of improperly obtaining or rewarding favorable treatment in connection with a prime contract or in connection with a subcontract relating to a prime contract.

"Person," as used in this clause, means a corporation, partnership, business association of any kind, trust, joint-stock company, or individual.

"Prime contract," as used in this clause, means a contract or contractual action entered into by the United States for the purpose of obtaining supplies, materials, equipment, or services of any kind.

"Prime Contractor," as used in this clause, means a person who has entered into a prime contract with the United States.

"Prime Contractor employee," as used in this clause, means any officer, partner, employee, or agent of a prime Contractor.

"Subcontract," as used in this clause, means a contract or contractual action entered into by a prime Contractor or subcontractor for the purpose of obtaining supplies, materials, equipment, or services of any kind under a prime contract.

"Subcontractor," as used in this clause, (1) means any person, other than the prime Contractor, who offers to furnish or furnishes any supplies, materials, equipment, or services of any kind under a prime contract or a subcontract entered into in connection with such prime contract, and (2) includes any person who offers to furnish or furnishes general supplies to the prime Contractor or a higher tier subcontractor.

"Subcontractor employee," as used in this clause, means any officer, partner, employee, or agent of a subcontractor.

(b) The Anti-Kickback Act of 1986 (41 U.S.C. 51-58) (the Act), prohibits any person from -

(1) Providing or attempting to provide or offering to provide any kickback;

(2) Soliciting, accepting, or attempting to accept any kickback; or

(3) Including, directly or indirectly, the amount of any kickback in the contract price charged by a prime Contractor to the United States or in the contract price charged by a subcontractor to a prime Contractor or higher tier subcontractor.

(c)(1) The Contractor shall have in place and follow reasonable procedures designed to prevent and detect possible violations described in paragraph (b) of this clause in its own operations and direct business relationships.

(2) When the Contractor has reasonable grounds to believe that a violation described in paragraph (b) of this clause may have occurred, the Contractor shall promptly report in writing the possible violation. Such reports shall be made to the inspector general of the contracting agency, the head of the contracting agency if the agency does not have an inspector general, or the Department of Justice.

(3) The Contractor shall cooperate fully with any Federal agency investigating a possible violation described in paragraph (b) of this clause.

(4) The Contracting Officer may (i) offset the amount of the kickback against any monies owed by the United States under the prime contract and/or (ii) direct that the Prime Contractor withhold, from sums owed a subcontractor under the prime contract, the amount of any kickback. The Contracting Officer may order the monies withheld under subdivision (c)(4)(ii) of this clause be paid over to the Government unless the Government has already offset those monies under subdivision (c)(4)(i) of this clause. In either case, the Prime Contractor shall notify the Contracting Officer when the monies are withheld.

(5) The Contractor agrees to incorporate the substance of this clause, including this subparagraph (c)(5) but excepting subparagraph (c)(1), in all subcontracts under this contract which exceed $100,000.

52.203-8 CANCELLATION, RESCISSION, AND RECOVERY OF FUNDS FOR ILLEGAL OR IMPROPER ACTIVITY (JAN 1997)

(a) If the Government receives information that a contractor or a person has engaged in conduct constituting a violation of subsection (a), (b), (c), or (d) of Section 27 of the Office of Federal Procurement Policy Act (41 U.S.C. 423) (the Act), as amended by section 4304 of the 1996 National Defense Authorization Act for Fiscal Year 1996 (Pub. L. 104-106), the Government may--

(1) Cancel the solicitation, if the contract has not yet been awarded or issued; or

(2) Rescind the contract with respect to which--

(i) The Contractor or someone acting for the Contractor has been convicted for an offense where the conduct constitutes a violation of subsection 27(a) or (b) of the Act for the purpose of either--

(A) Exchanging the information covered by such subsections for anything of value; or

(B) Obtaining or giving anyone a competitive advantage in the award of a Federal agency procurement contract; or

(ii) The head of the contracting activity has determined, based upon a preponderance of the evidence, that the Contractor or someone acting for the Contractor has engaged in conduct constituting an offense punishable under subsections 27(e)(1) of the Act.

(b) If the Government rescinds the contract under paragraph (a) of this clause, the Government is entitled to recover, in addition to any penalty prescribed by law, the amount expended under the contract.

(c) The rights and remedies of the Government specified herein are not exclusive, and are in addition to any other rights and remedies provided by law, regulation, or under this contract.

(End of clause)

52.203-10 PRICE OR FEE ADJUSTMENT FOR ILLEGAL OR IMPROPER ACTIVITY (JAN 1997)

(a) The Government, at its election, may reduce the price of a fixed-price type contract and the total cost and fee under a cost-type contract by the amount of profit or fee determined as set forth in paragraph (b) of this clause if the head of the contracting activity or designee determines that there was a violation of subsection 27 (a), (b), or (c) of the Office of Federal Procurement Policy Act, as amended (41 U.S.C. 423), as implemented in section 3.104 of the Federal Acquisition Regulation.

(b) The price or fee reduction referred to in paragraph (a) of this clause shall be--

(1) For cost-plus-fixed-fee contracts, the amount of the fee specified in the contract at the time of award;

(2) For cost-plus-incentive-fee contracts, the target fee specified in the contract at the time of award, notwithstanding any minimum fee or "fee floor" specified in the contract;

(3) For cost-plus-award-fee contracts--

(i) The base fee established in the contract at the time of contract award;

(ii) If no base fee is specified in the contract, 30 percent of the amount of each award fee otherwise payable to the Contractor for each award fee evaluation period or at each award fee determination point.

(4) For fixed-price-incentive contracts, the Government may--

(i) Reduce the contract target price and contract target profit both by an amount equal to the initial target profit specified in the contract at the time of contract award; or

(ii) If an immediate adjustment to the contract target price and contract target profit would have a significant adverse impact on the incentive price revision relationship under the contract, or adversely affect the contract financing provisions, the Contracting Officer may defer such adjustment until establishment of the total final price of the contract. The total final price established in accordance with the incentive price revision provisions of the contract shall be reduced by an amount equal to the initial target profit specified in the contract at the time of contract award and such reduced price shall be the total final contract price.

(5) For firm-fixed-price contracts, by 10 percent of the initial contract price or a profit amount determined by the Contracting Officer from records or documents in existence prior to the date of the contract award.

(c) The Government may, at its election, reduce a prime contractor's price or fee in accordance with the procedures of paragraph (b) of this clause for violations of the Act by its subcontractors by an amount not to exceed the amount of profit or fee reflected in the subcontract at the time the subcontract was first definitively priced.

(d) In addition to the remedies in paragraphs (a) and (c) of this clause, the Government may terminate this contract for default. The rights and remedies of the Government specified herein are not exclusive, and are in addition to any other rights and remedies provided by law or under this contract.

(End of clause)

52.203-12 LIMITATION ON PAYMENTS TO INFLUENCE CERTAIN FEDERAL TRANSACTIONS (JUN 2003)

(a) Definitions.

"Agency," as used in this clause, means executive agency as defined in 2.101.

"Covered Federal action," as used in this clause, means any of the following Federal actions:

(1) The awarding of any Federal contract.

(2) The making of any Federal grant.

(3) The making of any Federal loan.

(4) The entering into of any cooperative agreement.

(5) The extension, continuation, renewal, amendment, or modification of any Federal contract, grant, loan, or cooperative agreement.

"Indian tribe" and "tribal organization," as used in this clause, have the meaning provided in section 4 of the Indian Self-Determination and Education Assistance Act (25 U.S.C. 450B) and include Alaskan Natives.

"Influencing or attempting to influence," as used in this clause, means making, with the intent to influence, any communication to or appearance before an officer or employee of any agency, a Member of Congress, an officer or employee of Congress, or an employee of a Member of Congress in connection with any covered Federal action.

"Local government," as used in this clause, means a unit of government in a State and, if chartered, established, or otherwise recognized by a State for the performance of a governmental duty, including a local public authority, a special district, an intrastate district, a council of governments, a sponsor group representative organization, and any other instrumentality of a local government.

"Officer or employee of an agency," as used in this clause, includes the following individuals who are employed by an agency:

(1) An individual who is appointed to a position in the Government under Title 5, United States Code, including a position under a temporary appointment.

(2) A member of the uniformed services, as defined in subsection 101(3),Title 37, United States Code.

(3) A special Government employee, as defined in section 202, Title 18, United States Code.

(4) An individual who is a member of a Federal advisory committee, as defined by the Federal Advisory Committee Act, Title 5, United States Code, appendix 2.

"Person," as used in this clause, means an individual, corporation, company, association, authority, firm, partnership, society, State, and local government, regardless of whether such entity is operated for profit, or not for profit. This term excludes an Indian tribe, tribal organization, or any other Indian organization with respect to expenditures specifically permitted by other Federal law.

"Reasonable compensation," as used in this clause, means, with respect to a regularly employed officer or employee of any person, compensation that is consistent with the normal compensation for such officer or employee for work that is not furnished to, not funded by, or not furnished in cooperation with the Federal Government.

"Reasonable payment," as used in this clause, means, with respect to professional and other technical services, a payment in an amount that is consistent with the amount normally paid for such services in the private sector.

"Recipient," as used in this clause, includes the Contractor and all subcontractors. This term excludes an Indian tribe, tribal organization, or any other Indian organization with respect to expenditures specifically permitted by other Federal law.

"Regularly employed," as used in this clause, means, with respect to an officer or employee of a person requesting or receiving a Federal contract, an officer or employee who is employed by such person for at least 130 working days within 1 year immediately preceding the date of the submission that initiates agency consideration of such person for receipt of such contract. An officer or employee who is employed by such person for less than 130 working days within 1 year immediately preceding the date of the submission that initiates agency consideration of such person shall be considered to be regularly employed as soon as he or she is employed by such person for 130 working days.

State, as used in this clause, means a State of the United States, the District of Columbia, or an outlying area of the United States, an agency or instrumentality of a State, and multi-State, regional, or interstate entity having governmental duties and powers.

(b) Prohibitions.

(1) Section 1352 of Title 31, United States Code, among other things, prohibits a recipient of a Federal contract, grant, loan, or cooperative agreement from using appropriated funds to pay any person for influencing or attempting to influence an officer or employee of any agency, a Member of Congress, an officer or employee of Congress, or an employee of a Member of Congress in connection with any of the following covered Federal actions: the awarding of any Federal contract; the making of any Federal grant; the making of any Federal loan; the entering into of any cooperative agreement; or the modification of any Federal contract, grant, loan, or cooperative agreement.

(2) The Act also requires Contractors to furnish a disclosure if any funds other than Federal appropriated funds (including profit or fee received under a covered Federal transaction) have been paid, or will be paid, to any person for influencing or attempting to influence an officer or employee of any agency, a Member of Congress, an officer or employee of Congress, or an employee of a Member of Congress in connection with a Federal contract, grant, loan, or cooperative agreement.

(3) The prohibitions of the Act do not apply under the following conditions:

(i) Agency and legislative liaison by own employees.

(A) The prohibition on the use of appropriated funds, in subparagraph (b)(1) of this clause, does not apply in the case of a payment of reasonable compensation made to an officer or employee of a person requesting or receiving a covered Federal action if the payment is for agency and legislative liaison activities not directly related to a covered Federal action.

(B) For purposes of subdivision (b)(3)(i)(A) of this clause, providing any information specifically requested by an agency or Congress is permitted at any time.

(C) The following agency and legislative liaison activities are permitted at any time where they are not related to a specific solicitation for any covered Federal action:

(1) Discussing with an agency the qualities and characteristics (including individual demonstrations) of the person's products or services, conditions or terms of sale, and service capabilities.

(2) Technical discussions and other activities regarding the application or adaptation of the person's products or services for an agency's use.

(D) The following agency and legislative liaison activities are permitted where they are prior to formal solicitation of any covered Federal action--

(1) Providing any information not specifically requested but necessary for an agency to make an informed decision about initiation of a covered Federal action;

(2) Technical discussions regarding the preparation of an unsolicited proposal prior to its official submission; and

(3) Capability presentations by persons seeking awards from an agency pursuant to the provisions of the Small Business Act, as amended by Pub. L. 95-507, and subsequent amendments.

(E) Only those services expressly authorized by subdivision (b)(3)(i)(A) of this clause are permitted under this clause.

(ii) Professional and technical services.

(A) The prohibition on the use of appropriated funds, in subparagraph (b)(1) of this clause, does not apply in the case of--

(1) A payment of reasonable compensation made to an officer or employee of a person requesting or receiving a covered Federal action or an extension, continuation, renewal, amendment, or modification of a covered Federal action, if payment is for professional or technical services rendered directly in the preparation, submission, or negotiation of any bid, proposal, or application for that Federal action or for meeting requirements imposed by or pursuant to law as a condition for receiving that Federal action.

(2) Any reasonable payment to a person, other than an officer or employee of a person requesting or receiving a covered Federal action or an extension, continuation, renewal, amendment, or modification of a covered Federal action if the payment is for professional or technical services rendered directly in the preparation, submission, or negotiation of any bid, proposal, or application for that Federal action or for meeting requirements imposed by or pursuant to law as a condition for receiving that Federal action. Persons other than officers or employees of a person requesting or receiving a covered Federal action include consultants and trade associations.

(B) For purposes of subdivision (b)(3)(ii)(A) of this clause, "professional and technical services" shall be limited to advice and analysis directly applying any professional or technical discipline. For example, drafting of a legal document accompanying a bid or proposal by a lawyer is allowable. Similarly, technical advice provided by an engineer on the performance or operational capability of a piece of equipment rendered directly in the negotiation of a contract is allowable. However, communications with the intent to influence made by a professional (such as a licensed lawyer) or a technical person (such as a licensed accountant) are not allowable under this section unless they provide advice and analysis directly applying their professional or technical expertise and unless the advice or analysis is rendered directly and solely in the preparation, submission or negotiation of a covered Federal action. Thus, for example, communications with the intent to influence made by a lawyer that do not provide legal advice or analysis directly and solely related to the legal aspects of his or her client's proposal, but generally advocate one proposal over another are not allowable under this section because the lawyer is not providing professional legal services. Similarly, communications with the intent to influence made by an engineer providing an engineering analysis prior to the preparation or submission of a bid or proposal are not allowable under this section since the engineer is providing technical services but not directly in the preparation, submission or negotiation of a covered Federal action.

(C) Requirements imposed by or pursuant to law as a condition for receiving a covered Federal award include those required by law or regulation and any other requirements in the actual award documents.

(D) Only those services expressly authorized by subdivisions (b)(3)(ii)(A)(1) and (2) of this clause are permitted under this clause.

(E) The reporting requirements of FAR 3.803(a) shall not apply with respect to payments of reasonable compensation made to regularly employed officers or employees of a person.

(c) Disclosure.

(1) The Contractor who requests or receives from an agency a Federal contract shall file with that agency a disclosure form, OMB standard form LLL, Disclosure of Lobbying Activities, if such person has made or has agreed to make any payment using nonappropriated funds (to include profits from any covered Federal action), which would be prohibited under subparagraph (b)(1) of this clause, if paid for with appropriated funds.

(2) The Contractor shall file a disclosure form at the end of each calendar quarter in which there occurs any event that materially affects the accuracy of the information contained in any disclosure form previously filed by such person under subparagraph (c)(1) of this clause. An event that materially affects the accuracy of the information reported includes--

(i) A cumulative increase of $25,000 or more in the amount paid or expected to be paid for influencing or attempting to influence a covered Federal action; or

(ii) A change in the person(s) or individual(s) influencing or attempting to influence a covered Federal action; or

(iii) A change in the officer(s), employee(s), or Member(s) contacted to influence or attempt to influence a covered Federal action.

(3) The Contractor shall require the submittal of a certification, and if required, a disclosure form by any person who requests or receives any subcontract exceeding $100,000 under the Federal contract.

(4) All subcontractor disclosure forms (but not certifications) shall be forwarded from tier to tier until received by the prime Contractor. The prime Contractor shall submit all disclosures to the Contracting Officer at the end of the calendar quarter in which the disclosure form is submitted by the subcontractor. Each subcontractor certification shall be retained in the subcontract file of the awarding Contractor.

(d) Agreement. The Contractor agrees not to make any payment prohibited by this clause.

(e) Penalties.

(1) Any person who makes an expenditure prohibited under paragraph (a) of this clause or who fails to file or amend the disclosure form to be filed or amended by paragraph (b) of this clause shall be subject to civil penalties as provided for by 31 U.S.C. 1352. An imposition of a civil penalty does not prevent the Government from seeking any other remedy that may be applicable.

(2) Contractors may rely without liability on the representation made by their subcontractors in the certification and disclosure form.

(f) Cost allowability. Nothing in this clause makes allowable or reasonable any costs which would otherwise be unallowable or unreasonable. Conversely, costs made specifically unallowable by the requirements in this clause will not be made allowable under any other provision.

(End of clause)

52.204-4 PRINTED OR COPIED DOUBLE-SIDED ON RECYCLED PAPER (AUG 2000)

(a) Definitions. As used in this clause--

“Postconsumer material” means a material or finished product that has served its intended use and has been discarded for disposal or recovery, having completed its life as a consumer item. Postconsumer material is a part of the broader category of “recovered material.” For paper and paper products, postconsumer material means “postconsumer fiber” defined by the U.S. Environmental Protection Agency (EPA) as--

(1) Paper, paperboard, and fibrous materials from retail stores, office buildings, homes, and so forth, after they have passed through their end-usage as a consumer item, including: used corrugated boxes; old newspapers; old magazines; mixed waste paper; tabulating cards; and used cordage; or

(2) All paper, paperboard, and fibrous materials that enter and are collected from municipal solid waste; but not

(3) Fiber derived from printers' over-runs, converters' scrap, and over-issue publications.

“Printed or copied double-sided” means printing or reproducing a document so that information is on both sides of a sheet of paper.

“Recovered material,” for paper and paper products, is defined by EPA in its Comprehensive Procurement Guideline as “recovered fiber” and means the following materials:

(1) Postconsumer fiber; and

(2) Manufacturing wastes such as--

(i) Dry paper and paperboard waste generated after completion of the papermaking process (that is, those manufacturing operations up to and including the cutting and trimming of the paper machine reel into smaller rolls or rough sheets) including: envelope cuttings, bindery trimmings, and other paper and paperboard waste resulting from printing, cutting, forming, and other converting operations; bag, box, and carton manufacturing wastes; and butt rolls, mill wrappers, and rejected unused stock; and

(ii) Repulped finished paper and paperboard from obsolete inventories of paper and paperboard manufacturers, merchants, wholesalers, dealers, printers, converters, or others.

(b) In accordance with Section 101 of Executive Order 13101 of September 14, 1998, Greening the Government through Waste Prevention, Recycling, and Federal Acquisition, the Contractor is encouraged to submit paper documents, such as offers, letters, or reports, that are printed or copied double-sided on recycled paper that meet minimum content standards specified in Section 505 of Executive Order 13101, when not using electronic commerce methods to submit information or data to the Government.

(c) If the Contractor cannot purchase high-speed copier paper, offset paper, forms bond, computer printout paper, carbonless paper, file folders, white wove envelopes, writing and office paper, book paper, cotton fiber paper, and cover stock meeting the 30 percent postconsumer material standard for use in submitting paper documents to the Government, it should use paper containing no less than 20 percent postconsumer material. This lesser standard should be used only when paper meeting the 30 percent postconsumer material standard is not obtainable at a reasonable price or does not meet reasonable performance standards.

(End of clause)

52.204-7 CENTRAL CONTRACTOR REGISTRATION (OCT 2003)

(a) Definitions. As used in this clause--

Central Contractor Registration (CCR) database means the primary Government repository for Contractor information required for the conduct of business with the Government.

Data Universal Numbering System (DUNS) number means the 9-digit number assigned by Dun and Bradstreet, Inc. (D&B) to identify unique business entities.

Data Universal Numbering System +4 (DUNS+4) number means the DUNS number assigned by D&B plus a 4-character suffix that may be assigned by a business concern. (D&B has no affiliation with this 4-character suffix.) This 4-character suffix may be assigned at the discretion of the business concern to establish additional CCR records for identifying alternative Electronic Funds Transfer (EFT) accounts (see the FAR at Subpart 32.11) for the same parent concern.

Registered in the CCR database means that--

(1) The Contractor has entered all mandatory information, including the DUNS number or the DUNS+4 number, into the CCR database; and

(2) The Government has validated all mandatory data fields and has marked the record “Active”.

(b)(1) By submission of an offer, the offeror acknowledges the requirement that a prospective awardee shall be registered in the CCR database prior to award, during performance, and through final payment of any contract, basic agreement, basic ordering agreement, or blanket purchasing agreement resulting from this solicitation.

(2) The offeror shall enter, in the block with its name and address on the cover page of its offer, the annotation “DUNS” or “DUNS +4” followed by the DUNS or DUNS +4 number that identifies the offeror's name and address exactly as stated in the offer. The DUNS number will be used by the Contracting Officer to verify that the offeror is registered in the CCR database.

(c) If the offeror does not have a DUNS number, it should contact Dun and Bradstreet directly to obtain one.

(1) An offeror may obtain a DUNS number--

(i) If located within the United States, by calling Dun and Bradstreet at 1-866-705-5711 or via the Internet at http://www.dnb.com; or

(ii) If located outside the United States, by contacting the local Dun and Bradstreet office.

(2) The offeror should be prepared to provide the following information:

(i) Company legal business.

(ii) Tradestyle, doing business, or other name by which your entity is commonly recognized.

(iii) Company Physical Street Address, City, State, and Zip Code.

(iv) Company Mailing Address, City, State and Zip Code (if separate from physical).

(v) Company Telephone Number.

(vi) Date the company was started.

(vii) Number of employees at your location.

(viii) Chief executive officer/key manager.

(ix) Line of business (industry).

(x) Company Headquarters name and address (reporting relationship within your entity).

(d) If the Offeror does not become registered in the CCR database in the time prescribed by the Contracting Officer, the Contracting Officer will proceed to award to the next otherwise successful registered Offeror.

(e) Processing time, which normally takes 48 hours, should be taken into consideration when registering. Offerors who are not registered should consider applying for registration immediately upon receipt of this solicitation.

(f) The Contractor is responsible for the accuracy and completeness of the data within the CCR database, and for any liability resulting from the Government's reliance on inaccurate or incomplete data. To remain registered in the CCR database after the initial registration, the Contractor is required to review and update on an annual basis from the date of initial registration or subsequent updates its information in the CCR database to ensure it is current, accurate and complete. Updating information in the CCR does not alter the terms and conditions of this contract and is not a substitute for a properly executed contractual document.

(g)(1)(i) If a Contractor has legally changed its business name, “doing business as” name, or division name (whichever is shown on the contract), or has transferred the assets used in performing the contract, but has not completed the necessary requirements regarding novation and change-of-name agreements in Subpart 42.12, the Contractor shall provide the responsible Contracting Officer a minimum of one business day's written notification of its intention to (A) change the name in the CCR database; (B) comply with the requirements of Subpart 42.12 of the FAR; and (C) agree in writing to the timeline and procedures specified by the responsible Contracting Officer. The Contractor must provide with the notification sufficient documentation to support the legally changed name.

(ii) If the Contractor fails to comply with the requirements of paragraph (g)(1)(i) of this clause, or fails to perform the agreement at paragraph (g)(1)(i)(C) of this clause, and, in the absence of a properly executed novation or change-of-name agreement, the CCR information that shows the Contractor to be other than the Contractor indicated in the contract will be considered to be incorrect information within the meaning of the “Suspension of Payment” paragraph of the electronic funds transfer (EFT) clause of this contract.

(2) The Contractor shall not change the name or address for EFT payments or manual payments, as appropriate, in the CCR record to reflect an assignee for the purpose of assignment of claims (see FAR Subpart 32.8, Assignment of Claims). Assignees shall be separately registered in the CCR database. Information provided to the Contractor's CCR record that indicates payments, including those made by EFT, to an ultimate recipient other than that Contractor will be considered to be incorrect information within the meaning of the “Suspension of payment” paragraph of the EFT clause of this contract.

(h) Offerors and Contractors may obtain information on registration and annual confirmation requirements via the internet at http://www.ccr.gov or by calling 1-888-227-2423, or 269-961-5757.

(End of clause)

52.209-6 PROTECTING THE GOVERNMENT'S INTEREST WHEN SUBCONTRACTING WITH CONTRACTORS DEBARRED, SUSPENDED, OR PROPOSED FOR DEBARMENT (JUL 1995)

(a) The Government suspends or debars Contractors to protect the Government's interests. The Contractor shall not enter into any subcontract in excess of the $25,000 with a Contractor that is debarred, suspended, or proposed for debarment unless there is a compelling reason to do so.

(b) The Contractor shall require each proposed first-tier subcontractor, whose subcontract will exceed $25,000, to disclose to the Contractor, in writing, whether as of the time of award of the subcontract, the subcontractor, or its principles, is or is not debarred, suspended, or proposed for debarment by the Federal Government.

(c) A corporate officer or a designee of the Contractor shall notify the Contracting Officer, in writing, before entering into a subcontract with a party that is debarred, suspended, or proposed for debarment (see FAR 9.404 for information on the List of Parties Excluded from Federal Procurement and Nonprocurement Programs). The notice must include the following:

(1) The name of the subcontractor.

(2) The Contractor's knowledge of the reasons for the subcontractor being on the List of Parties Excluded from Federal Procurement and Nonprocurement Programs.

(3) The compelling reason(s) for doing business with the subcontractor notwithstanding its inclusion on the List of Parties Excluded from Federal Procurement and Nonprocurement Programs.

(4) The systems and procedures the Contractor has established to ensure that it is fully protecting the Government's interests when dealing with such subcontractor in view of the specific basis for the party's debarment, suspension, or

proposed debarment.

(End of clause)

52.211-15 DEFENSE PRIORITY AND ALLOCATION REQUIREMENTS (SEP 1990)

This is a rated order certified for national defense use, and the Contractor shall follow all the requirements of the Defense Priorities and Allocations System regulation (15 CFR 700).

(End of clause)

52.215-2 AUDIT AND RECORDS--NEGOTIATION (JUN 1999)

(a) As used in this clause, "records" includes books, documents, accounting procedures and practices, and other data, regardless of type and regardless of whether such items are in written form, in the form of computer data, or in any other form.

(b) Examination of costs. If this is a cost-reimbursement, incentive, time-and-materials, labor-hour, or price redeterminable contract, or any combination of these, the Contractor shall maintain and the Contracting Officer, or an authorized representative of the Contracting Officer, shall have the right to examine and audit all records and other evidence sufficient to reflect properly all costs claimed to have been incurred or anticipated to be incurred directly or indirectly in performance of this contract. This right of examination shall include inspection at all reasonable times of the Contractor's plants, or parts of them, engaged in performing the contract.

(c) Cost or pricing data. If the Contractor has been required to submit cost or pricing data in connection with any pricing action relating to this contract, the Contracting Officer, or an authorized representative of the Contracting Officer, in order to evaluate the accuracy, completeness, and currency of the cost or pricing data, shall have the right to examine and audit all of the Contractor's records, including computations and projections, related to--

(1) The proposal for the contract, subcontract, or modification;

(2) The discussions conducted on the proposal(s), including those related to negotiating;

(3) Pricing of the contract, subcontract, or modification; or

(4) Performance of the contract, subcontract or modification.

(d) Comptroller General--(1) The Comptroller General of the United States, or an authorized representative, shall have access to and the right to examine any of the Contractor's directly pertinent records involving transactions related to this contract or a subcontract hereunder.

(2) This paragraph may not be construed to require the Contractor or subcontractor to create or maintain any record that the Contractor or subcontractor does not maintain in the ordinary course of business or pursuant to a provision of law.

(e) Reports. If the Contractor is required to furnish cost, funding, or performance reports, the Contracting Officer or an authorized representative of the Contracting Officer shall have the right to examine and audit the supporting records and materials, for the purpose of evaluating (1) the effectiveness of the Contractor's policies and procedures to produce data compatible with the objectives of these reports and (2) the data reported.

(f) Availability. The Contractor shall make available at its office at all reasonable times the records, materials, and

other evidence described in paragraphs (a), (b), (c), (d), and (e) of this clause, for examination, audit, or reproduction, until 3 years after final payment under this contract or for any shorter period specified in Subpart 4.7, Contractor Records Retention, of the Federal Acquisition Regulation (FAR), or for any longer period required by statute or by other clauses of this contract. In addition--

(1) If this contract is completely or partially terminated, the Contractor shall make available the records relating to the work terminated until 3 years after any resulting final termination settlement; and

(2) The Contractor shall make available records relating to appeals under the Disputes clause or to litigation or the settlement of claims arising under or relating to this contract until such appeals, litigation, or claims are finally resolved.

(g) The Contractor shall insert a clause containing all the terms of this clause, including this paragraph (g), in all subcontracts under this contract that exceed the simplified acquisition threshold, and--

(1) That are cost-reimbursement, incentive, time-and-materials, labor-hour, or price-redeterminable type or any combination of these;

(2) For which cost or pricing data are required; or

(3) That require the subcontractor to furnish reports as discussed in paragraph (e) of this clause.

The clause may be altered only as necessary to identify properly the contracting parties and the Contracting Officer under the Government prime contract.

(End of clause)

52.215-11 PRICE REDUCTION FOR DEFECTIVE COST OR PRICING DATA--MODIFICATIONS (OCT 1997)

(a) This clause shall become operative only for any modification to this contract involving a pricing adjustment expected to exceed the threshold for submission of cost or pricing data at FAR 15.403-4, except that this clause does not apply to any modification if an exception under FAR 15.403-1 applies.

(b) If any price, including profit or fee, negotiated in connection with any modification under this clause, or any cost reimbursable under this contract, was increased by any significant amount because (1) the Contractor or a subcontractor furnished cost or pricing data that were not complete, accurate, and current as certified in its Certificate of Current Cost or Pricing Data, (2) a subcontractor or prospective subcontractor furnished the Contractor cost or pricing data that were not complete, accurate, and current as certified in the Contractor's Certificate of Current Cost or Pricing Data, or (3) any of these parties furnished data of any description that were not accurate, the price or cost shall be reduced accordingly and the contract shall be modified to reflect the reduction. This right to a price reduction is limited to that resulting from defects in data relating to modifications for which this clause becomes operative under paragraph (a) of this clause.

(c) Any reduction in the contract price under paragraph (b) of this clause due to defective data from a prospective subcontractor that was not subsequently awarded the subcontract shall be limited to the amount, plus applicable overhead and profit markup, by which--

(1) The actual subcontract; or

(2) The actual cost to the Contractor, if there was no subcontract, was less than the prospective subcontract cost estimate submitted by the Contractor; provided, that the actual subcontract price was not itself affected by defective cost or pricing data.

(d)(1) If the Contracting Officer determines under paragraph (b) of this clause that a price or cost reduction should be made, the Contractor agrees not to raise the following matters as a defense:

(i) The Contractor or subcontractor was a sole source supplier or otherwise was in a superior bargaining position and thus the price of the contract would not have been modified even if accurate, complete, and current cost or pricing data had been submitted.

(ii) The Contracting Officer should have known that the cost or pricing data in issue were defective even though the Contractor or subcontractor took no affirmative action to bring the character of the data to the attention of the Contracting Officer.

(iii) The contract was based on an agreement about the total cost of the contract and there was no agreement about the cost of each item procured under the contract.

(iv) The Contractor or subcontractor did not submit a Certificate of Current Cost or Pricing Data.

(2)(i) Except as prohibited by subdivision (d)(2)(ii) of this clause, an offset in an amount determined appropriate by the Contracting Officer based upon the facts shall be allowed against the amount of a contract price reduction if--

(A) The Contractor certifies to the Contracting Officer that, to the best of the Contractor's knowledge and belief, the Contractor is entitled to the offset in the amount requested; and

(B) The Contractor proves that the cost or pricing data were available before the “as of” date specified on its Certificate of Current Cost or Pricing Data, and that the data were not submitted before such date.

(ii) An offset shall not be allowed if--

(A) The understated data were known by the Contractor to be understated before the “as of” date specified on its Certificate of Current Cost or Pricing Data; or

(B) The Government proves that the facts demonstrate that the contract price would not have increased in the amount to be offset even if the available data had been submitted before the “as of” date specified on its Certificate of Current Cost or Pricing Data.

(e) If any reduction in the contract price under this clause reduces the price of items for which payment was made prior to the date of the modification reflecting the price reduction, the Contractor shall be liable to and shall pay the United States at the time such overpayment is repaid--

(1) Simple interest on the amount of such overpayment to be computed from the date(s) of overpayment to the Contractor to the date the Government is repaid by the Contractor at the applicable underpayment rate effective for each quarter prescribed by the Secretary of the Treasury under 26 U.S.C. 6621(a)(2); and

A penalty equal to the amount of the overpayment, if the Contractor or subcontractor knowingly submitted cost or pricing data that were incomplete, inaccurate, or noncurrent.

(End of clause)

52.215-13 SUBCONTRACTOR COST OR PRICING DATA--MODIFICATIONS (OCT 1997)

(a) The requirements of paragraphs (b) and (c) of this clause shall--

(1) Become operative only for any modification to this contract involving a pricing adjustment expected to exceed the threshold for submission of cost or pricing data at FAR 15.403-4; and

(2) Be limited to such modifications.

(b) Before awarding any subcontract expected to exceed the threshold for submission of cost or pricing data at FAR 15.403-4, on the date of agreement on price or the date of award, whichever is later; or before pricing any subcontract modification involving a pricing adjustment expected to exceed the threshold for submission of cost or pricing data at FAR 15.403-4, the Contractor shall require the subcontractor to submit cost or pricing data (actually or by specific identification in writing), unless an exception under FAR 15.403-1 applies.

(c) The Contractor shall require the subcontractor to certify in substantially the form prescribed in FAR 15.406-2 that, to the best of its knowledge and belief, the data submitted under paragraph (b) of this clause were accurate, complete, and current as of the date of agreement on the negotiated price of the subcontract or subcontract modification.

The Contractor shall insert the substance of this clause, including this paragraph (d), in each subcontract that exceeds the threshold for submission of cost or pricing data at FAR 15.403-4 on the date of agreement on price or the date of award, whichever is later.

(End of clause)

52.215-18 REVERSION OR ADJUSTMENT OF PLANS FOR POSTRETIREMENT BENEFITS (PRB) OTHER THAN PENSIONS (OCT 1997)

The Contractor shall promptly notify the Contracting Officer in writing when it determines that it will terminate or reduce a PRB plan. If PRB fund assets revert, or inure, to the Contractor or are constructively received by it under a plan termination or otherwise, the Contractor shall make a refund or give a credit to the Government for its equitable share as required by FAR 31.205-6(o)(6). The Contractor shall include the substance of this clause in all subcontracts under this contract that meet the applicability requirements of FAR 15.408(j).

(End of clause)

52.215-21 REQUIREMENTS FOR COST OR PRICING DATA OR INFORMATION OTHER THAN COST OR PRICING DATA--MODIFICATIONS (OCT 1997)

(a) Exceptions from cost or pricing data. (1) In lieu of submitting cost or pricing data for modifications under this contract, for price adjustments expected to exceed the threshold set forth at FAR 15.403-4 on the date of the agreement on price or the date of the award, whichever is later, the Contractor may submit a written request for exception by submitting the information described in the following subparagraphs. The Contracting Officer may require additional supporting information, but only to the extent necessary to determine whether an exception should be granted, and whether the price is fair and reasonable--

(i) Identification of the law or regulation establishing the price offered. If the price is controlled under law by periodic rulings, reviews, or similar actions of a governmental body, attach a copy of the controlling document, unless it was previously submitted to the contracting office.

(ii) Information on modifications of contracts or subcontracts for commercial items. (A) If--

(1) The original contract or subcontract was granted an exception from cost or pricing data requirements because the price agreed upon was based on adequate price competition or prices set by law or regulation, or was a contract or

subcontract for the acquisition of a commercial item; and

(2) The modification (to the contract or subcontract) is not exempted based on one of these exceptions, then the Contractor may provide information to establish that the modification would not change the contract or subcontract from a contract or subcontract for the acquisition of a commercial item to a contract or subcontract for the acquisition of an item other than a commercial item.

(B) For a commercial item exception, the Contractor shall provide, at a minimum, information on prices at which the same item or similar items have previously been sold that is adequate for evaluating the reasonableness of the price of the modification. Such information may include--

(1) For catalog items, a copy of or identification of the catalog and its date, or the appropriate pages for the offered items, or a statement that the catalog is on file in the buying office to which the proposal is being submitted. Provide a copy or describe current discount policies and price lists (published or unpublished), e.g., wholesale, original equipment manufacturer, or reseller. Also explain the basis of each offered price and its relationship to the established catalog price, including how the proposed price relates to the price of recent sales in quantities similar to the proposed quantities.

(2) For market-priced items, the source and date or period of the market quotation or other basis for market price, the base amount, and applicable discounts. In addition, describe the nature of the market.

(3) For items included on an active Federal Supply Service Multiple Award Schedule contract, proof that an exception has been granted for the schedule item.

(2) The Contractor grants the Contracting Officer or an authorized representative the right to examine, at any time before award, books, records, documents, or other directly pertinent records to verify any request for an exception under this clause, and the reasonableness of price. For items priced using catalog or market prices, or law or regulation , access does not extend to cost or profit information or other data relevant solely to the Contractor's determination of the prices to be offered in the catalog or marketplace.

(b) Requirements for cost or pricing data. If the Contractor is not granted an exception from the requirement to submit cost or pricing data, the following applies:

(1) The Contractor shall submit cost or pricing data and supporting attachments in accordance with Table 15-2 of FAR 15.408.

As soon as practicable after agreement on price, but before award (except for unpriced actions), the Contractor shall submit a Certificate of Current Cost or Pricing Data, as prescribed by FAR 15.406-2.

(End of clause)

52.217-7 OPTION FOR INCREASED QUANTITY--SEPARATELY PRICED LINE ITEM (MAR 1989)

The Government may require the delivery of the numbered line item, identified in the Schedule as an option item, in the quantity and at the price stated in the Schedule. The Contracting Officer may exercise the option by written notice to the Contractor within 30 days of contract of award. Delivery of added items shall continue at the same rate that like items are called for under the contract, unless the parties otherwise agree.

(End of clause)

52.219-4 NOTICE OF PRICE EVALUATION PREFERENCE FOR HUBZONE SMALL BUSINESS CONCERNS (JAN 1999)

(a) Definition. HUBZone small business concern, as used in this clause, means a small business concern that appears on the List of Qualified HUBZone Small Business Concerns maintained by the Small Business Administration.

(b) Evaluation preference. (1) Offers will be evaluated by adding a factor of 10 percent to the price of all offers, except--

(i) Offers from HUBZone small business concerns that have not waived the evaluation preference;

(ii) Otherwise successful offers from small business concerns;

(iii) Otherwise successful offers of eligible products under the Trade Agreements Act when the dollar threshold for application of the Act is exceeded (see 25.402 of the Federal Acquisition Regulation (FAR)); and

(iv) Otherwise successful offers where application of the factor would be inconsistent with a Memorandum of Understanding or other international agreement with a foreign government.

(2) The factor of 10 percent shall be applied on a line item basis or to any group of items on which award may be made. Other evaluation factors described in the solicitation shall be applied before application of the factor.

(3) A concern that is both a HUBZone small business concern and a small disadvantaged business concern will receive the benefit of both the HUBZone small business price evaluation preference and the small disadvantaged business price evaluation adjustment (see FAR clause 52.219-23). Each applicable price evaluation preference or adjustment shall be calculated independently against an offeror's base offer.

These individual preference amounts shall be added together to arrive at the total evaluated price for that offer.

(c) Waiver of evaluation preference. A HUBZone small business concern may elect to waive the evaluation preference, in which case the factor will be added to its offer for evaluation purposes. The agreements in paragraph (d) of this clause do not apply if the offeror has waived the evaluation preference.

___ Offeror elects to waive the evaluation preference.

(d) Agreement. A HUBZone small business concern agrees that in the performance of the contract, in the case of a contract for

(1) Services (except construction), at least 50 percent of the cost of personnel for contract performance will be spent for employees of the concern or employees of other HUBZone small business concerns;

(2) Supplies (other than procurement from a nonmanufacturer of such supplies), at least 50 percent of the cost of manufacturing, excluding the cost of materials, will be performed by the concern or other HUBZone small business concerns;

(3) General construction, at least 15 percent of the cost of the contract performance incurred for personnel will be will be spent on the concern's employees or the employees of other HUBZone small business concerns; or

(4) Construction by special trade contractors, at least 25 percent of the cost of the contract performance incurred for personnel will be spent on the concern's employees or the employees of other HUBZone small business concerns.

(e) A HUBZone joint venture agrees that in the performance of the contract, the applicable percentage specified in paragraph (d) of this clause will be performed by the HUBZone small business participant or participants.

(f) A HUBZone small business concern nonmanufacturer agrees to furnish in performing this contract only end items manufactured or produced by HUBZone small business manufacturer concerns. This paragraph does not apply in connection with construction or service contracts.

(End of clause)

52.219-8 UTILIZATION OF SMALL BUSINESS CONCERNS (MAY 2004)

(a) It is the policy of the United States that small business concerns, veteran-owned small business concerns, service-disabled veteran-owned small business concerns, HUBZone small business concerns, small disadvantaged business concerns, and women-owned small business concerns shall have the maximum practicable opportunity to participate in performing contracts let by any Federal agency, including contracts and subcontracts for subsystems, assemblies, components, and related services for major systems. It is further the policy of the United States that its prime contractors establish procedures to ensure the timely payment of amounts due pursuant to the terms of their subcontracts with small business concerns, veteran-owned small business concerns, service-disabled veteran-owned small business concerns, HUBZone small business concerns, small disadvantaged business concerns, and women-owned small business concerns.

(b) The Contractor hereby agrees to carry out this policy in the awarding of subcontracts to the fullest extent consistent with efficient contract performance. The Contractor further agrees to cooperate in any studies or surveys as may be conducted by the United States Small Business Administration or the awarding agency of the United States as may be necessary to determine the extent of the Contractor's compliance with this clause.

Definitions. As used in this contract--

HUBZone small business concern means a small business concern that appears on the List of Qualified HUBZone Small Business Concerns maintained by the Small Business Administration.

Service-disabled veteran-owned small business concern--

(1) Means a small business concern--

(i) Not less than 51 percent of which is owned by one or more service-disabled veterans or, in the case of any publicly owned business, not less than 51 percent of the stock of which is owned by one or more service-disabled veterans; and

(ii) The management and daily business operations of which are controlled by one or more service-disabled veterans or, in the case of a service-disabled veteran with permanent and severe disability, the spouse or permanent caregiver of such veteran.

(2) Service-disabled veteran means a veteran, as defined in 38 U.S.C. 101(2), with a disability that is service-connected, as defined in 38 U.S.C. 101(16).

Small business concern means a small business as defined pursuant to Section 3 of the Small Business Act and relevant regulations promulgated pursuant thereto.

Small disadvantaged business concern means a small business concern that represents, as part of its offer that--

(1) It has received certification as a small disadvantaged business concern consistent with 13 CFR part 124, subpart B;

(2) No material change in disadvantaged ownership and control has occurred since its certification;

(3) Where the concern is owned by one or more individuals, the net worth of each individual upon whom the certification is based does not exceed $750,000 after taking into account the applicable exclusions set forth at 13 CFR 124.104(c)(2); and

(4) It is identified, on the date of its representation, as a certified small disadvantaged business in the database maintained by the Small Business Administration (PRO-Net).

Veteran-owned small business concern means a small business concern--

(1) Not less than 51 percent of which is owned by one or more veterans (as defined at 38 U.S.C. 101(2)) or, in the case of any publicly owned business, not less than 51 percent of the stock of which is owned by one or more veterans; and

(2) The management and daily business operations of which are controlled by one or more veterans.

Women-owned small business concern means a small business concern--

(1) That is at least 51 percent owned by one or more women, or, in the case of any publicly owned business, at least 51 percent of the stock of which is owned by one or more women; and

(2) Whose management and daily business operations are controlled by one or more women.

(d) Contractors acting in good faith may rely on written representations by their subcontractors regarding their status as a small business concern, a veteran-owned small business concern, a service-disabled veteran-owned small business concern, a HUBZone small business concern, a small disadvantaged business concern, or a women-owned small business concern.

(End of clause)

52.219-9 SMALL BUSINESS SUBCONTRACTING PLAN (JAN 2002)

(a) This clause does not apply to small business concerns.

(b) Definitions. As used in this clause--

Commercial item means a product or service that satisfies the definition of commercial item in section 2.101 of the Federal Acquisition Regulation.

Commercial plan means a subcontracting plan (including goals) that covers the offeror's fiscal year and that applies to the entire production of commercial items sold by either the entire company or a portion thereof (e.g., division, plant, or product line).

Individual contract plan means a subcontracting plan that covers the entire contract period (including option periods), applies to a specific contract, and has goals that are based on the offeror's planned subcontracting in support of the specific contract, except that indirect costs incurred for common or joint purposes may be allocated on a prorated basis to the contract.

Master plan means a subcontracting plan that contains all the required elements of an individual contract plan, except goals, and may be incorporated into individual contract plans, provided the master plan has been approved.

Subcontract means any agreement (other than one involving an employer-employee relationship) entered into by a Federal Government prime Contractor or subcontractor calling for supplies or services required for performance of the contract or subcontract.

(c) The offeror, upon request by the Contracting Officer, shall submit and negotiate a subcontracting plan, where applicable, that separately addresses subcontracting with small business, veteran-owned small business, HUBZone small business concerns, small disadvantaged business, and women-owned small business concerns. If the offeror is submitting an individual contract plan, the plan must separately address subcontracting with small business, veteran-owned small business, HUBZone small business, small disadvantaged business, and women-owned small business concerns, with a separate part for the basic contract and separate parts for each option (if any). The plan shall be included in and made a part of the resultant contract. The subcontracting plan shall be negotiated within the time specified by the Contracting Officer. Failure to submit and negotiate the subcontracting plan shall make the offeror ineligible for award of a contract.

(d) The offeror's subcontracting plan shall include the following:

(1) Goals, expressed in terms of percentages of total planned subcontracting dollars, for the use of small business, veteran-owned small business, HUBZone small business, small disadvantaged business, and women-owned small business concerns as subcontractors. The offeror shall include all subcontracts that contribute to contract performance, and may include a proportionate share of products and services that are normally allocated as indirect costs.

(2) A statement of--

(i) Total dollars planned to be subcontracted for an individual contract plan; or the offeror's total projected sales, expressed in dollars, and the total value of projected subcontracts to support the sales for a commercial plan;

(ii) Total dollars planned to be subcontracted to small business concerns;

(iii) Total dollars planned to be subcontracted to veteran-owned small business concerns;

(iv) Total dollars planned to be subcontracted to HUBZone small business concerns;

(v) Total dollars planned to be subcontracted to small disadvantaged business concerns; and

(vi) Total dollars planned to be subcontracted to women-owned small business concerns.

(3) A description of the principal types of supplies and services to be subcontracted, and an identification of the types planned for subcontracting to--

(i) Small business concerns;

(ii) Veteran-owned small business concerns;

(iii) HUBZone small business concerns;

(iv) Small disadvantaged business concerns; and

(v) Women-owned small business concerns.

(4) A description of the method used to develop the subcontracting goals in paragraph (d)(1) of this clause.

(5) A description of the method used to identify potential sources for solicitation purposes (e.g., existing company source lists, the Procurement Marketing and Access Network (PRO-Net) of the Small Business Administration

(SBA), veterans service organizations, the National Minority Purchasing Council Vendor Information Service, the Research and Information Division of the Minority Business Development Agency in the Department of Commerce, or small, HUBZone, small disadvantaged, and women-owned small business trade associations). A firm may rely on the information contained in PRO-Net as an accurate representation of a concern's size and ownership characteristics for the purposes of maintaining a small, veteran-owned small, HUBZone small, small disadvantaged, and women-owned small business source list. Use of PRO-Net as its source list does not relieve a firm of its responsibilities (e.g., outreach, assistance, counseling, or publicizing subcontracting opportunities) in this clause.

(6) A statement as to whether or not the offeror in included indirect costs in establishing subcontracting goals, and a description of the method used to determine the proportionate share of indirect costs to be incurred with—

(i) Small business concerns;

(ii) Veteran-owned small business concerns;

(iii) HUBZone small business concerns;

(iv) Small disadvantaged business concerns; and

(v) Women-owned small business concerns.

(7) The name of the individual employed by the offeror who will administer the offeror's subcontracting program, and a description of the duties of the individual.

(8) A description of the efforts the offeror will make to assure that small business, veteran-owned small business, HUBZone small business, small disadvantaged business and women-owned small business concerns have an equitable opportunity to compete for subcontracts.

(9) Assurances that the offeror will include the clause of this contract entitled ``Utilization of Small Business Concerns'' in all subcontracts that offer further subcontracting opportunities, and that the offeror will require all subcontractors (except small business concerns) that receive subcontracts in excess of $500,000 ($1,000,000 for construction of any public facility) to adopt a subcontracting plan that complies with the requirements of this clause.

(10) Assurances that the offeror will--

(i) Cooperate in any studies or surveys as may be required;

(ii) Submit periodic reports so that the Government can determine the extent of compliance by the offeror with the subcontracting plan;

(iii) Submit Standard Form (SF) 294, Subcontracting Report for Individual Contracts, and/or SF 295, Summary Subcontract Report, in accordance with paragraph (j) of this clause. The reports shall provide information on subcontract awards to small business concerns, veteran-owned small business concerns, service-disabled veteran-owned small business concerns, small disadvantaged business concerns, women-owned small business concerns, and Historically Black Colleges and Universities and Minority Institutions. Reporting shall be in accordance with the instructions on the forms or as provided in agency regulations.

(iv) Ensure that its subcontractors agree to submit SF 294 and SF 295.

(11) A description of the types of records that will be maintained concerning procedures that have been adopted to comply with the requirements and goals in the plan, including establishing source lists; and a description of the offeror's efforts to locate small business, veteran-owned small business, HUBZone small business, small disadvantaged business, and women-owned small business concerns and award subcontracts to them. The records shall include at least the following (on a plant-wide or company-wide basis, unless otherwise indicated)

(i) Source lists (e.g., PRO-Net), guides, and other data that identify small business, veteran-owner small business, HUBZone small business, small disadvantaged business, and women-owned small business concerns.

(ii) Organizations contacted in an attempt to locate sources that are small business, veteran-owned small business, HUBZone small business, small disadvantaged business, or women-owned small business concerns.

(iii) Records on each subcontract solicitation resulting in an award of more than $100,000, indicating--

(A) Whether small business concerns were solicited and, if not, why not;

(B) Whether veteran-owned small business concerns were solicited and, if not, why not;

(C) Whether HUBZone small business concerns were solicited and, if not, why not;

(D) Whether small disadvantaged business concerns were solicited and, if not, why not;

(E) Whether women-owned small business concerns were solicited and, if not, why not; and

(F) If applicable, the reason award was not made to a small business concern.

(iv) Records of any outreach efforts to contact--

(A) Trade associations;

(B) Business development organizations;

(C) Conferences and trade fairs to locate small, HUBZone small, small disadvantaged, and women-owned small business sources; and

(D) Veterans service organizations.

(v) Records of internal guidance and encouragement provided to buyers through--

(A) Workshops, seminars, training, etc.; and

(B) Monitoring performance to evaluate compliance with the program's requirements.

(vi) On a contract-by-contract basis, records to support award data submitted by the offeror to the Government, including the name, address, and business size of each subcontractor. Contractors having commercial plans need not comply with this requirement.

(e) In order to effectively implement this plan to the extent consistent with efficient contract performance, the Contractor shall perform the following functions:

(1) Assist small business, veteran-owner small business, HUBZone small business, small disadvantaged business, and women-owned small business concerns by arranging solicitations, time for the preparation of bids, quantities, specifications, and delivery schedules so as to facilitate the participation by such concerns. Where the Contractor's lists of potential small business, veteran-owner small business, HUBZone small business, small disadvantaged business, and women-owned small business subcontractors are excessively long, reasonable effort shall be made to give all such small business concerns an opportunity to compete over a period of time.

(2) Provide adequate and timely consideration of the potentialities of small business, veteran-owner small business, HUBZone small business, small disadvantaged business, and women-owned small business concerns in all ``make-or-buy'' decisions.

(3) Counsel and discuss subcontracting opportunities with representatives of small business, veteran-owner small business, HUBZone small business, small disadvantaged business, and women-owned small business firms.

(4) Provide notice to subcontractors concerning penalties and remedies for misrepresentations of business status as small, veteran-owner small business, HUBZone small, small disadvantaged, or women-owned small business for the purpose of obtaining a subcontract that is to be included as part or all of a goal contained in the Contractor's subcontracting plan.

(f) A master plan on a plant or division-wide basis that contains all the elements required by paragraph (d) of this clause, except goals, may be incorporated by reference as a part of the subcontracting plan required of the offeror by this clause; provided--
(1) the master plan has been approved, (2) the offeror ensures that the master plan is updated as necessary and provides copies of the approved master plan, including evidence of its approval, to the Contracting Officer, and (3) goals and any deviations from the master plan deemed necessary by the Contracting Officer to satisfy the requirements of this contract are set forth in the individual subcontracting plan.

(g) A commercial plan is the preferred type of subcontracting plan for contractors furnishing commercial items. The commercial plan shall relate to the offeror's planned subcontracting generally, for both commercial and Government business, rather than solely to the Government contract. Commercial plans are also preferred for subcontractors that provide commercial items under a prime contract, whether or not the prime contractor is supplying a commercial item.

(h) Prior compliance of the offeror with other such subcontracting plans under previous contracts will be considered by the Contracting Officer in determining the responsibility of the offeror for award of the contract.

(i) The failure of the Contractor or subcontractor to comply in good faith with (1) the clause of this contract entitled "Utilization Of Small Business Concerns," or (2) an approved plan required by this clause, shall be a material breach of the contract.

(j) The Contractor shall submit the following reports:

(1) Standard Form 294, Subcontracting Report for Individual Contracts. This report shall be submitted to the Contracting Officer semiannually and at contract completion. The report covers subcontract award data related to this contract. This report is not required for commercial plans.

(2) Standard Form 295, Summary Subcontract Report. This report encompasses all of the contracts with the awarding agency. It must be submitted semi-annually for contracts with the Department of Defense and annually for contracts with civilian agencies. If the reporting activity is covered by a commercial plan, the reporting activity must report annually all subcontract awards under that plan. All reports submitted at the close of each fiscal year (both individual and commercial plans) shall include a breakout, in the Contractor's format, of subcontract awards, in whole dollars, to small disadvantaged business concerns by North American Industry Classification System (NAICS) Industry Subsector. For a commercial plan, the Contractor may obtain from each of its subcontractors a predominant NAICS Industry Subsector and report all awards to that subcontractor under its predominant NAICS Industry Subsector.

(End of clause)

52.219-9 SMALL BUSINESS SUBCONTRACTING PLAN (JAN 2002)--ALTERNATE II (OCT 2001).

(a) This clause does not apply to small business concerns.

(b) Definitions. As used in this clause--

Commercial item means a product or service that satisfies the definition of commercial item in section 2.101 of the Federal Acquisition Regulation.

Commercial plan means a subcontracting plan (including goals) that covers the offeror's fiscal year and that applies to the entire production of commercial items sold by either the entire company or a portion thereof (e.g., division, plant, or product line).

Individual contract plan means a subcontracting plan that covers the entire contract period (including option periods), applies to a specific contract, and has goals that are based on the offeror's planned subcontracting in support of the specific contract, except that indirect costs incurred for common or joint purposes may be allocated on a prorated basis to the contract.

Master plan means a subcontracting plan that contains all the required elements of an individual contract plan, except goals, and may be incorporated into individual contract plans, provided the master plan has been approved.

Subcontract means any agreement (other than one involving an employer-employee relationship) entered into by a Federal Government prime Contractor or subcontractor calling for supplies or services required for performance of the contract or subcontract.

(c) Proposals submitted in response to this solicitation shall include a subcontracting plan that separately addresses subcontracting with small business, veteran-owner small business, HUBZone small business, small disadvantaged business, and women-owned small business concerns. If the offeror is submitting an individual contract plan, the plan must separately address subcontracting with small business, veteran-owner small business, HUBZone small business, small disadvantaged business, and women-owned small business concerns, with a separate part for the basic contract and separate parts for each option (if any). The plan shall be included in and made a part of the resultant contract. The subcontracting plan shall be negotiated within the time specified by the Contracting Officer. Failure to submit and negotiate a subcontracting plan shall make the offeror ineligible for award of a contract.

(d) The offeror's subcontracting plan shall include the following:

(1) Goals, expressed in terms of percentages of total planned subcontracting dollars, for the use of small business, veteran-owned small business, HUBZone small business, small disadvantaged business, and women-owned small business concerns as subcontractors. The offeror shall include all subcontracts that contribute to contract performance, and may include a proportionate share of products and services that are normally allocated as indirect costs.

(2) A statement of--

(i) Total dollars planned to be subcontracted for an individual contract plan; or the offeror's total projected sales, expressed in dollars, and the total value of projected subcontracts to support the sales for a commercial plan;

(ii) Total dollars planned to be subcontracted to small business concerns;

(iii) Total dollars planned to be subcontracted to veteran-owned small business concerns;

(iv) Total dollars planned to be subcontracted to HUBZone small business concerns;

(v) Total dollars planned to be subcontracted to small disadvantaged business concerns; and

(vi) Total dollars planned to be subcontracted to women-owned small business concerns.

(3) A description of the principal types of supplies and services to be subcontracted, and an identification of the types planned for subcontracting to--

(i) Small business concerns;

(ii) Veteran-owned small business concerns;

(iii) HUBZone small business concerns;

(iv) Small disadvantaged business concerns; and

(v) Women-owned small business concerns.

(4) A description of the method used to develop the subcontracting goals in paragraph (d)(1) of this clause.

(5) A description of the method used to identify potential sources for solicitation purposes (e.g., existing company source lists, the Procurement Marketing and Access Network (PRO-Net) of the Small Business Administration (SBA), veterans service organizations, the National Minority Purchasing Council Vendor Information Service, the Research and Information Division of the Minority Business Development Agency in the Department of Commerce, or small, HUBZone, small disadvantaged, and women-owned small business trade associations). A firm may rely on the information contained in PRO-Net as an accurate representation of a concern's size and ownership characteristics for the purposes of maintaining a small, veteran-owned small, HUBZone small, small disadvantaged, and women-owned small business source list. Use of PRO-Net as its source list does not relieve a firm of its responsibilities (e.g., outreach, assistance, counseling, or publicizing subcontracting opportunities) in this clause.

(6) A statement as to whether or not the offeror in included indirect costs in establishing subcontracting goals, and a description of the method used to determine the proportionate share of indirect costs to be incurred with—

(i) Small business concerns;

(ii) Veteran-owned small business concerns;

(iii) HUBZone small business concerns;

(iv) Small disadvantaged business concerns; and

(v) Women-owned small business concerns.

(7) The name of the individual employed by the offeror who will administer the offeror's subcontracting program, and a description of the duties of the individual.

(8) A description of the efforts the offeror will make to assure that small business, veteran-owned small business, HUBZone small business, small disadvantaged business and women-owned small business concerns have an equitable opportunity to compete for subcontracts.

(9) Assurances that the offeror will include the clause of this contract entitled ``Utilization of Small Business Concerns'' in all subcontracts that offer further subcontracting opportunities, and that the offeror will require all subcontractors (except small business concerns) that receive subcontracts in excess of $500,000 ($1,000,000 for construction of any public facility) to adopt a subcontracting plan that complies with the requirements of this clause.

(10) Assurances that the offeror will--

(i) Cooperate in any studies or surveys as may be required;

(ii) Submit periodic reports so that the Government can determine the extent of compliance by the offeror with the subcontracting plan;

(iii) Submit Standard Form (SF) 294, Subcontracting Report for Individual Contracts, and/or SF 295, Summary Subcontract Report, in accordance with paragraph (j) of this clause. The reports shall provide information on subcontract awards to small business concerns, veteran-owned small business concerns, service-disabled veteran-owned small business concerns, small disadvantaged business concerns, women-owned small business concerns, and Historically Black Colleges and Universities and Minority Institutions. Reporting shall be in accordance with the instructions on the forms or as provided in agency regulations.

(iv) Ensure that its subcontractors agree to submit SF 294 and SF 295.

(11) A description of the types of records that will be maintained concerning procedures that have been adopted to comply with the requirements and goals in the plan, including establishing source lists; and a description of the offeror's efforts to locate small business, veteran-owned small business, HUBZone small business, small disadvantaged business, and women-owned small business concerns and award subcontracts to them. The records shall include at least the following (on a plant-wide or company-wide basis, unless otherwise indicated)

(i) Source lists (e.g., PRO-Net), guides, and other data that identify small business, veteran-owner small business, HUBZone small business, small disadvantaged business, and women-owned small business concerns.

(ii) Organizations contacted in an attempt to locate sources that are small business, veteran-owned small business, HUBZone small business, small disadvantaged business, or women-owned small business concerns.

(iii) Records on each subcontract solicitation resulting in an award of more than $100,000, indicating--

(A) Whether small business concerns were solicited and, if not, why not;

(B) Whether veteran-owned small business concerns were solicited and, if not, why not;

(C) Whether HUBZone small business concerns were solicited and, if not, why not;

(D) Whether small disadvantaged business concerns were solicited and, if not, why not;

(E) Whether women-owned small business concerns were solicited and, if not, why not; and

(F) If applicable, the reason award was not made to a small business concern.

(iv) Records of any outreach efforts to contact--

(A) Trade associations;

(B) Business development organizations;

(C) Conferences and trade fairs to locate small, HUBZone small, small disadvantaged, and women-owned small business sources; and

(D) Veterans service organizations.

(v) Records of internal guidance and encouragement provided to buyers through--

(A) Workshops, seminars, training, etc.; and

(B) Monitoring performance to evaluate compliance with the program's requirements.

(vi) On a contract-by-contract basis, records to support award data submitted by the offeror to the Government, including the name, address, and business size of each subcontractor. Contractors having commercial plans need not comply with this requirement.

(e) In order to effectively implement this plan to the extent consistent with efficient contract performance, the Contractor shall perform the following functions:

(1) Assist small business, veteran-owner small business, HUBZone small business, small disadvantaged business, and women-owned small business concerns by arranging solicitations, time for the preparation of bids, quantities, specifications, and delivery schedules so as to facilitate the participation by such concerns. Where the Contractor's lists of potential small business, veteran-owner small business, HUBZone small business, small disadvantaged business, and women-owned small business subcontractors are excessively long, reasonable effort shall be made to give all such small business concerns an opportunity to compete over a period of time.

(2) Provide adequate and timely consideration of the potentialities of small business, veteran-owner small business, HUBZone small business, small disadvantaged business, and women-owned small business concerns in all ``make-or-buy'' decisions.

(3) Counsel and discuss subcontracting opportunities with representatives of small business, veteran-owner small business, HUBZone small business, small disadvantaged business, and women-owned small business firms.

(4) Provide notice to subcontractors concerning penalties and remedies for misrepresentations of business status as small, veteran-owner small business, HUBZone small, small disadvantaged, or women-owned small business for the purpose of obtaining a subcontract that is to be included as part or all of a goal contained in the Contractor's subcontracting plan.

(f) A master plan on a plant or division-wide basis that contains all the elements required by paragraph (d) of this clause, except goals, may be incorporated by reference as a part of the subcontracting plan required of the offeror by this clause; provided--
(1) the master plan has been approved, (2) the offeror ensures that the master plan is updated as necessary and provides copies of the approved master plan, including evidence of its approval, to the Contracting Officer, and (3) goals and any deviations from the master plan deemed necessary by the Contracting Officer to satisfy the requirements of this contract are set forth in the individual subcontracting plan.

(g) A commercial plan is the preferred type of subcontracting plan for contractors furnishing commercial items. The commercial plan shall relate to the offeror's planned subcontracting generally, for both commercial and Government business, rather than solely to the Government contract. Commercial plans are also preferred for subcontractors that provide commercial items under a prime contract, whether or not the prime contractor is supplying a commercial item.

(h) Prior compliance of the offeror with other such subcontracting plans under previous contracts will be considered by the Contracting Officer in determining the responsibility of the offeror for award of the contract.

(i) The failure of the Contractor or subcontractor to comply in good faith with (1) the clause of this contract entitled "Utilization Of Small Business Concerns," or (2) an approved plan required by this clause, shall be a material breach of the contract.

(j) The Contractor shall submit the following reports:

(1) Standard Form 294, Subcontracting Report for Individual Contracts. This report shall be submitted to the Contracting Officer semiannually and at contract completion. The report covers subcontract award data related to this contract. This report is not required for commercial plans.

(2) Standard Form 295, Summary Subcontract Report. This report encompasses all of the contracts with the awarding agency. It must be submitted semi-annually for contracts with the Department of Defense and annually for contracts with civilian agencies. If the reporting activity is covered by a commercial plan, the reporting activity must report annually all subcontract awards under that plan. All reports submitted at the close of each fiscal year (both individual and commercial plans) shall include a breakout, in the Contractor's format, of subcontract awards, in whole dollars, to small disadvantaged business concerns by North American Industry Classification System (NAICS) Industry Subsector. For a commercial plan, the Contractor may obtain from each of its subcontractors a predominant NAICS Industry Subsector and report all awards to that subcontractor under its predominant NAICS Industry Subsector.

(End of clause)

52.219-16 LIQUIDATED DAMAGES-SUBCONTRACTING PLAN (JAN 1999)

(a) Failure to make a good faith effort to comply with the subcontracting plan, as used in this clause, means a willful or intentional failure to perform in accordance with the requirements of the subcontracting plan approved under the clause in this contract entitled "Small Business Subcontracting Plan," or willful or intentional action to frustrate the plan.

(b) Performance shall be measured by applying the percentage goals to the total actual subcontracting dollars or, if a commercial plan is involved, to the pro rata share of actual subcontracting dollars attributable to Government contracts covered by the commercial plan. If, at contract completion or, in the case of a commercial plan, at the close of the fiscal year for which the plan is applicable, the Contractor has failed to meet its subcontracting goals and the Contracting Officer decides in accordance with paragraph (c) of this clause that the Contractor failed to make a good faith effort to comply with its subcontracting plan, established in accordance with the clause in this contract entitled “Small Business Subcontracting Plan,” the Contractor shall pay the Government liquidated damages in an amount stated. The amount of probable damages attributable to the Contractor's failure to comply shall be an amount equal to the actual dollar amount by which the Contractor failed to achieve each subcontract goal.

(c) Before the Contracting Officer makes a final decision that the Contractor has failed to make such good faith effort, the Contracting Officer shall give the Contractor written notice specifying the failure and permitting the Contractor to demonstrate what good faith efforts have been made and to discuss the matter. Failure to respond to the notice may be taken as an admission that no valid explanation exists. If, after consideration of all the pertinent data, the Contracting Officer finds that the Contractor failed to make a good faith effort to comply with the subcontracting plan, the Contracting Officer shall issue a final decision to that effect and require that the Contractor pay the Government liquidated damages as provided in paragraph (b) of this clause.

(d) With respect to commercial plans, the Contracting Officer who approved the plan will perform the functions of the Contracting Officer under this clause on behalf of all agencies with contracts covered by the commercial plan.

(e) The Contractor shall have the right of appeal, under the clause in this contract entitled Disputes, from any final decision of the Contracting Officer.

(f) Liquidated damages shall be in addition to any other remedies that the Government may have.

(End of clause)

52.222-3 CONVICT LABOR (JUN 2003)

(a) Except as provided in paragraph (b) of this clause, the Contractor shall not employ in the performance of this contract any person undergoing a sentence of imprisonment imposed by any court of a State, the District of Columbia, Puerto Rico, the Northern Mariana Islands, American Samoa, Guam, or the U.S. Virgin Islands.

(b) The Contractor is not prohibited from employing persons--

(1) On parole or probation to work at paid employment during the term of their sentence;

(2) Who have been pardoned or who have served their terms; or

(3) Confined for violation of the laws of any of the States, the District of Columbia, Puerto Rico, the Northern Mariana Islands, American Samoa, Guam, or the U.S. Virgin Islands who are authorized to work at paid employment in the community under the laws of such jurisdiction, if--

(i) The worker is paid or is in an approved work training program on a voluntary basis;

(ii) Representatives of local union central bodies or similar labor union organizations have been consulted;

(iii) Such paid employment will not result in the displacement of employed workers, or be applied in skills, crafts, or trades in which there is a surplus of available gainful labor in the locality, or impair existing contracts for services;

(iv) The rates of pay and other conditions of employment will not be less than those paid or provided for work of a similar nature in the locality in which the work is being performed; and

(v) The Attorney General of the United States has certified that the work-release laws or **regulations** of the jurisdiction involved are in conformity with the requirements of Executive Order 11755, as amended by Executive Orders 12608 and 12943.

(End of clause)

52.222-4 CONTRACT WORK HOURS AND SAFETY STANDARDS ACT - OVERTIME COMPENSATION. (SEP 2000)

(a) Overtime requirements. No Contractor or subcontractor employing laborers or mechanics (see Federal Acquisition Regulation 22.300) shall require or permit them to work over 40 hours in any workweek unless they are paid at least 1 and 1/2 times the basic rate of pay for each hour worked over 40 hours.

(b) Violation; liability for unpaid wages; liquidated damages. The responsible Contractor and subcontractor are liable for unpaid wages if they violate the terms in paragraph (a) of this clause. In addition, the Contractor and subcontractor are liable for liquidated damages payable to the Government. The Contracting Officer will assess liquidated damages at the rate of $10 per affected employee for each calendar day on which the employer required or permitted the employee to work in excess of the standard workweek of 40 hours without paying overtime wages required by the Contract Work Hours and Safety Standards Act.

(c) Withholding for unpaid wages and liquidated damages. The Contracting Officer will withhold from payments due under the contract sufficient funds required to satisfy any Contractor or subcontractor liabilities for unpaid wages and liquidated damages. If amounts withheld under the contract are insufficient to satisfy Contractor or

subcontractor liabilities, the Contracting Officer will withhold payments from other Federal or Federally assisted contracts held by the same Contractor that are subject to the Contract Work Hours and Safety Standards Act.

(d) Payrolls and basic records.

(1) The Contractor and its subcontractors shall maintain payrolls and basic payroll records for all laborers and mechanics working on the contract during the contract and shall make them available to the Government until 3 years after contract completion. The records shall contain the name and address of each employee, social security number, labor classifications, hourly rates of wages paid, daily and weekly number of hours worked, deductions made, and actual wages paid. The records need not duplicate those required for construction work by Department of Labor regulations at 29 CFR 5.5(a)(3) implementing the Davis-Bacon Act.

(2) The Contractor and its subcontractors shall allow authorized representatives of the Contracting Officer or the Department of Labor to inspect, copy, or transcribe records maintained under paragraph (d)(1) of this clause. The Contractor or subcontractor also shall allow authorized representatives of the Contracting Officer or Department of Labor to interview employees in the workplace during working hours.

(e) Subcontracts. The Contractor shall insert the provisions set forth in paragraphs (a) through (d) of this clause in subcontracts exceeding $100,000 and require subcontractors to include these provisions in any lower tier subcontracts. The Contractor shall be responsible for compliance by any subcontractor or lower-tier subcontractor with the provisions set forth in paragraphs (a) through (d) of this clause.

(End of clause)

52.222-6 DAVIS-BACON ACT (FEB 1995)

(a) All laborers and mechanics employed or working upon the site of the work will be paid unconditionally and not less often than once a week, and without subsequent deduction or rebate on any account (except such payroll deductions as are permitted by regulations issued by the Secretary of Labor under the Copeland Act (29 CFR Part 3), the full amount of wages and bona fide fringe benefits (or cash equivalents thereof) due at time of payment computed at rates not less than those contained in the wage determination of the Secretary of Labor which is attached hereto and made a part hereof, regardless of any contractual relationship which may be alleged to exist between the Contractor and such laborers and mechanics. Contributions made or costs reasonably anticipated for bona fide fringe benefits under section 1(b)(2) of the Davis-Bacon Act on behalf of laborers or mechanics are considered wages paid to such laborers or mechanics, subject to the provisions of paragraph (d) of this clause; also, regular contributions made or costs incurred for more than a weekly period (but not less often than quarterly) under plans, funds, or programs which cover the particular weekly period, are deemed to be constructively made or incurred during such period. Such laborers and mechanics shall be paid not less than the appropriate wage rate and fringe benefits in the wage determination for the classification of work actually performed, without regard to skill, except as provided in the clause entitled Apprentices and Trainees. Laborers or mechanics performing work in more than one classification may be compensated at the rate specified for each classification for the time actually worked therein; provided, That the employer's payroll records accurately set forth the time spent in each classification in which work is performed. The wage determination (including any additional classifications and wage rates conformed under paragraph (b) of this clause) and the Davis-Bacon poster (WH-1321) shall be posted at all times by the Contractor and its subcontractors at the site of the work in a prominent and accessible place where it can be easily seen by the workers.

(b)(1) The Contracting Officer shall require that any class of laborers or mechanics which is not listed in the wage determination and which is to be employed under the contract shall be classified in conformance with the wage determination. The Contracting Officer shall approve an additional classification and wage rate and fringe benefits therefor only when all the following criteria have been met:

(i) The work to be performed by the classification requested is not performed by a classification in the wage determination.

(ii) The classification is utilized in the area by the construction industry.

(iii) The proposed wage rate, including any bona fide fringe benefits, bears a reasonable relationship to the wage rates contained in the wage determination.

(2) If the Contractor and the laborers and mechanics to be employed in the classification (if known), or their representatives, and the Contracting Officer agree on the classification and wage rate (including the amount designated for fringe benefits, where appropriate), a report of the action taken shall be sent by the Contracting Officer to the Administrator of the Wage and Hour Division, Employment Standards Administration, U.S. Department of Labor, Washington, DC 20210. The Administrator or an authorized representative will approve, modify, or disapprove every additional classification action within 30 days of receipt and so advise the Contracting Officer or will notify the Contracting Officer within the 30-day period that additional time is necessary.

(3) In the event the Contractor, the laborers or mechanics to be employed in the classification, or their representatives, and the Contracting Officer do not agree on the proposed classification and wage rate (including the amount designated for fringe benefits, where appropriate), the Contracting Officer shall refer the questions, including the views of all interested parties and the recommendation of the Contracting Officer, to the Administrator of the Wage and Hour Division for determination. The Administrator, or an authorized representative, will issue a determination within 30 days of receipt and so advise the Contracting Officer or will notify the Contracting Officer within the 30-day period that additional time is necessary.

(4) The wage rate (including fringe benefits, where appropriate) determined pursuant to subparagraphs (b)(2) and (b)(3) of this clause shall be paid to all workers performing work in the classification under this contract from the first day on which work is performed in the classification.

(c) Whenever the minimum wage rate prescribed in the contract for a class of laborers or mechanics includes a fringe benefit which is not expressed as an hourly rate, the Contractor shall either pay the benefit as stated in the wage determination or shall pay another bona fide fringe benefit or an hourly cash equivalent thereof.

53 If the Contractor does not make payments to a trustee or other third person, the Contractor may consider as part of the wages of any laborer or mechanic the amount of any costs reasonably anticipated in providing bona fide fringe benefits under a plan or program; provided, That the Secretary of Labor has found, upon the written request of the Contractor, that the applicable standards of the Davis-Bacon Act have been met. The Secretary of Labor may require the Contractor to set aside in a separate account assets for the meeting of obligations under the plan or program.

(End of clause)

52.222-7 WITHHOLDING OF FUNDS (FEB 1988)

The Contracting Officer shall, upon his or her own action or upon written request of an authorized representative of the Department of Labor, withhold or cause to be withheld from the Contractor under this contract or any other Federal contract with the same Prime Contractor, or any other Federally assisted contract subject to Davis-Bacon prevailing wage requirements, which is held by the same Prime Contractor, so much of the accrued payments or advances as may be considered necessary to pay laborers and mechanics, including apprentices, trainees, and helpers, employed by the Contractor or any subcontractor the full amount of wages required by the contract. In the event of failure to pay any laborer or mechanic, including any apprentice, trainee, or helper, employed or working on the site of the work, all or part of the wages required by the contract, the Contracting Officer may, after written notice to the Contractor, take such action as may be necessary to cause the suspension of any further payment,

advance, or guarantee of funds until such violations have ceased.

(End of clause)

52.222-8 PAYROLLS AND BASIC RECORDS (FEB 1988)

(a) Payrolls and basic records relating thereto shall be maintained by the Contractor during the course of the work and preserved for a period of 3 years thereafter for all laborers and mechanics working at the site of the work. Such records shall contain the name, address, and social security number of each such worker, his or her correct classification, hourly rates of wages paid (including rates of contributions or costs anticipated for bona fide fringe benefits or cash equivalents thereof of the types described in section 1(b)(2)(B) of the Davis-Bacon Act), daily and weekly number of hours worked, deductions made, and actual wages paid. Whenever the Secretary of Labor has found, under paragraph (d) of the clause entitled Davis-Bacon Act, that the wages of any laborer or mechanic include the amount of any costs reasonably anticipated in providing benefits under a plan or program described in section 1(b)(2)(B) of the Davis-Bacon Act, the Contractor shall maintain records which show that the commitment to provide such benefits is enforceable, that the plan or program is financially responsible, and that the plan or program has been communicated in writing to the laborers or mechanics affected, and records which show the costs anticipated or the actual cost incurred in providing such benefits. Contractors employing apprentices or trainees under approved programs shall maintain written evidence of the registration of apprenticeship programs and certification of trainee programs, the registration of the apprentices and trainees, and the ratios and wage rates prescribed in the applicable programs.

(b)(1) The Contractor shall submit weekly for each week in which any contract work is performed a copy of all payrolls to the Contracting Officer. The payrolls submitted shall set out accurately and completely all of the information required to be maintained under paragraph (a) of this clause. This information may be submitted in any form desired. Optional Form WH-347 (Federal Stock Number 029-005-00014-1) is available for this purpose and may be purchased from the Superintendent of Documents, U.S. Government Printing Office, Washington, DC 20402. The Prime Contractor is responsible for the submission of copies of payrolls by all subcontractors.

(2) Each payroll submitted shall be accompanied by a "Statement of Compliance," signed by the Contractor or subcontractor or his or her agent who pays or supervises the payment of the persons employed under the contract and shall certify--

(i) That the payroll for the payroll period contains the information required to be maintained under paragraph (a) of this clause and that such information is correct and complete;

(ii) That each laborer or mechanic (including each helper, apprentice, and trainee) employed on the contract during the payroll period has been paid the full weekly wages earned, without rebate, either directly or indirectly, and that no deductions have been made either directly or indirectly from the full wages earned, other than permissible deductions as set forth in the Regulations, 29 CFR Part 3; and

(iii) That each laborer or mechanic has been paid not less than the applicable wage rates and fringe benefits or cash equivalents for the classification of work performed, as specified in the applicable wage determination incorporated into the contract.

(3) The weekly submission of a properly executed certification set forth on the reverse side of Optional Form WH-347 shall satisfy the requirement for submission of the "Statement of Compliance" required by subparagraph (b)(2) of this clause.

(4) The falsification of any of the certifications in this clause may subject the Contractor or subcontractor to civil or criminal prosecution under Section 1001 of Title 18 and Section 3729 of Title 31 of the United States Code.

(c) The Contractor or subcontractor shall make the records required under paragraph (a) of this clause available for inspection, copying, or transcription by the Contracting Officer or authorized representatives of the Contracting Officer or the Department of Labor. The Contractor or subcontractor shall permit the Contracting Officer or representatives of the Contracting Officer or the Department of Labor to interview employees during working hours on the job. If the Contractor or subcontractor fails to submit required records or to make them available, the Contracting Officer may, after written notice to the Contractor, take such action as may be necessary to cause the suspension of any further payment. Furthermore, failure to submit the required records upon request or to make such records available may be grounds for debarment action pursuant to 29 CFR 5.12.

(End of clause)

52.222-9 APPRENTICES AND TRAINEES (FEB 1988)

(a) Apprentices. Apprentices will be permitted to work at less than the predetermined rate for the work they performed when they are employed pursuant to and individually registered in a bona fide apprenticeship program registered with the U.S. Department of Labor, Employment and Training Administration, Bureau of Apprenticeship and Training, or with a State Apprenticeship Agency recognized by the Bureau, or if a person is employed in his or her first 90 days of probationary employment as an apprentice in such an apprenticeship program, who is not individually registered in the program, but who has been certified by the Bureau of Apprenticeship and Training or a State Apprenticeship Agency (where appropriate) to be eligible for probationary employment as an apprentice. The allowable ratio of apprentices to journeymen on the job site in any craft classification shall not be greater than the ratio permitted to the Contractor as to the entire work force under the registered program. Any worker listed on a payroll at an apprentice wage rate, who is not registered or otherwise employed as stated in this paragraph, shall be paid not less than the applicable wage determination for the classification of work actually performed. In addition, any apprentice performing work on the job site in excess of the ratio permitted under the registered program shall be paid not less than the applicable wage rate on the wage determination for the work actually performed. Where a contractor is performing construction on a project in a locality other than that in which its program is registered, the ratios and wage rates (expressed in percentages of the journeyman's hourly rate) specified in the Contractor's or subcontractor's registered program shall be observed. Every apprentice must be paid at not less than the rate specified in the registered program for the apprentice's level of progress, expressed as a percentage of the journeyman hourly rate specified in the applicable wage determination. Apprentices shall be paid fringe benefits in accordance with the provisions of the apprenticeship program. If the apprenticeship program does not specify fringe benefits, apprentices must be paid the full amount of fringe benefits listed on the wage determination for the applicable classification. If the Administrator determines that a different practice prevails for the applicable apprentice classification, fringes shall be paid in accordance with that determination. In the event the Bureau of Apprenticeship and Training, or a State Apprenticeship Agency recognized by the Bureau, withdraws approval of an apprenticeship program, the Contractor will no longer be permitted to utilize apprentices at less than the applicable predetermined rate for the work performed until an acceptable program is approved.

(b) Trainees. Except as provided in 29 CFR 5.16, trainees will not be permitted to work at less than the predetermined rate for the work performed unless they are employed pursuant to and individually registered in a program which has received prior approval, evidenced by formal certification by the U.S. Department of Labor, Employment and Training Administration. The ratio of trainees to journeymen on the job site shall not be greater than permitted under the plan approved by the Employment and Training Administration. Every trainee must be paid at not less than the rate specified in the approved program for the trainee's level of progress, expressed as a percentage of the journeyman hourly rate specified in the applicable wage determination. Trainees shall be paid fringe benefits in accordance with the provisions of the trainee program. If the trainee program does not mention fringe benefits, trainees shall be paid the full amount of fringe benefits listed in the wage determination unless the Administrator of the Wage and Hour Division determines that there is an apprenticeship program associated with the corresponding journeyman wage rate in the wage determination which provides for less than full fringe benefits for apprentices. Any employee listed on the payroll at a trainee rate who is not registered and participating in a training plan approved by the Employment and Training Administration shall be paid not less than the applicable

wage rate in the wage determination for the classification of work actually performed. In addition, any trainee performing work on the job site in excess of the ratio permitted under the registered program shall be paid not less than the applicable wage rate in the wage determination for the work actually performed. In the event the Employment and Training Administration withdraws approval of a training program, the Contractor will no longer be permitted to utilize trainees at less than the applicable predetermined rate for the work performed until an acceptable program is approved.

(c) Equal employment opportunity. The utilization of apprentices, trainees, and journeymen under this clause shall be in conformity with the equal employment opportunity requirements of Executive Order 11246, as amended, and 29 CFR Part 30.

(End of clause)

52.222-10 COMPLIANCE WITH COPELAND ACT REQUIREMENTS (FEB 1988)

The Contractor shall comply with the requirements of 29 CFR Part 3, which are hereby incorporated by reference in this contract.

(End of clause)

52.222-11 SUBCONTRACTS (LABOR STANDARDS (FEB 1988)

(a) The Contractor or subcontractor shall insert in any subcontracts the clauses entitled Davis-Bacon Act, Contract Work Hours and Safety Standards Act-Overtime Compensation, Apprentices and Trainees, Payrolls and Basic Records, Compliance with Copeland Act Requirements, Withholding of Funds, Subcontracts (Labor Standards), Contract Termination-Debarment, Disputes Concerning Labor Standards, Compliance with Davis-Bacon and Related Act Regulations, and Certification of Eligibility, and such other clauses as the Contracting Officer may, by appropriate instructions, require, and also a clause requiring subcontractors to include these clauses in any lower tier subcontracts. The Prime Contractor shall be responsible for compliance by any subcontractor or lower tier subcontractor with all the contract clauses cited in this paragraph.

(b)(1) Within 14 days after award of the contract, the Contractor shall deliver to the Contracting Officer a completed Statement and Acknowledgment Form (SF 1413) for each subcontract, including the subcontractor's signed and dated acknowledgment that the clauses set forth in paragraph (a) of this clause have been included in the subcontract.

(ii) Within 14 days after the award of any subsequently awarded subcontract the Contractor shall deliver to the Contracting Officer an updated completed SF 1413 for such additional subcontract.

(End of clause)

52.222-12 CONTRACT TERMINATION--DEBARMENT (FEB 1988)

A breach of the contract clauses entitled Davis-Bacon Act, Contract Work Hours and Safety Standards Act--Overtime Compensation, Apprentices and Trainees, Payrolls and Basic Records, Compliance with Copeland Act Requirements, Subcontracts (Labor Standards), Compliance with Davis-Bacon and Related Act Regulations, or Certification of Eligibility may be grounds for termination of the contract, and for debarment as a Contractor and subcontractor as provided in 29 CFR 5.12.

(End of clause)

52.222-13 COMPLIANCE WITH DAVIS-BACON AND RELATED ACT REGULATIONS (FEB 1988)

All rulings and interpretations of the Davis-Bacon and Related Acts contained in 29 CFR Parts 1, 3, and 5 are hereby incorporated by reference in this contract.

(End of clause)

52.222-14 DISPUTES CONCERNING LABOR STANDARDS (FEB 1988)

The United States Department of Labor has set forth in 29 CFR Parts 5, 6, and 7 procedures for resolving disputes concerning labor standards requirements. Such disputes shall be resolved in accordance with those procedures and not the Disputes clause of this contract. Disputes within the meaning of this clause include disputes between the Contractor (or any of its subcontractors) and the contracting agency, the U.S. Department of Labor, or the employees or their representatives.

(End of clause)

52.222-15 CERTIFICATION OF ELIGIBILITY (FEB 1988)

(a) By entering into this contract, the Contractor certifies that neither it (nor he or she) nor any person or firm who has an interest in the Contractor's firm is a person or firm ineligible to be awarded Government contracts by virtue of section 3(a) of the Davis-Bacon Act or 29 CFR 5.12(a)(1).

(b) No part of this contract shall be subcontracted to any person or firm ineligible for award of a Government contract by virtue of section 3(a) of the Davis-Bacon Act or 29 CFR 5.12(a)(1).

(c) The penalty for making false statements is prescribed in the U.S. Criminal Code, 18 U.S.C. 1001.

(End of clause)

52.222-21 PROHIBITION OF SEGREGATED FACILITIES (FEB 1999)

(a) Segregated facilities, as used in this clause, means any waiting rooms, work areas, rest rooms and wash rooms, restaurants and other eating areas, time clocks, locker rooms and other storage or dressing areas, parking lots, drinking fountains, recreation or entertainment areas, transportation, and housing facilities provided for employees, that are segregated by explicit directive or are in fact segregated on the basis of race, color, religion, sex, or national origin because of written or oral policies or employee custom. The term does not include separate or single-user rest rooms or necessary dressing or sleeping areas provided to assure privacy between the sexes.

(b) The Contractor agrees that it does not and will not maintain or provide for its employees any segregated facilities at any of its establishments, and that it does not and will not permit its employees to perform their services at any location under its control where segregated facilities are maintained. The Contractor agrees that a breach of this clause is a violation of the Equal Opportunity clause in this contract.

(c) The Contractor shall include this clause in every subcontract and purchase order that is subject to the Equal Opportunity clause of this contract.

(End of clause)

52.222-26 EQUAL OPPORTUNITY (APR 2002)

(a) Definition. United States, as used in this clause, means the 50 States, the District of Columbia, Puerto Rico, the Northern Mariana Islands, American Samoa, Guam, the U.S. Virgin Islands, and Wake Island.

(b) If, during any 12-month period (including the 12 months preceding the award of this contract), the Contractor has been or is awarded nonexempt Federal contracts and/or subcontracts that have an aggregate value in excess of $10,000, the Contractor shall comply with paragraphs (b)(1) through (b)(11) of this clause, except for work performed outside the United States by employees who were not recruited within the United States. Upon request, the Contractor shall provide information necessary to determine the applicability of this clause.

(1) The Contractor shall not discriminate against any employee or applicant for employment because of race, color, religion, sex, or national origin. However, it shall not be a violation of this clause for the Contractor to extend a publicly announced preference in employment to Indians living on or near an Indian reservation, in connection with employment opportunities on or near an Indian reservation, as permitted by 41 CFR 60-1.5.

(2) The Contractor shall take affirmative action to ensure that applicants are employed, and that employees are treated during employment, without regard to their race, color, religion, sex, or national origin. This shall include, but not be limited to, (i) employment, (ii) upgrading, (iii) demotion, (iv) transfer, (v) recruitment or recruitment advertising, (vi) layoff or termination, (vii) rates of pay or other forms of compensation, and (viii) selection for training, including apprenticeship.

(3) The Contractor shall post in conspicuous places available to employees and applicants for employment the notices to be provided by the Contracting Officer that explain this clause.

(4) The Contractor shall, in all solicitations or advertisements for employees placed by or on behalf of the Contractor, state that all qualified applicants will receive consideration for employment without regard to race, color, religion, sex, or national origin.

(5) The Contractor shall send, to each labor union or representative of workers with which it has a collective bargaining agreement or other contract or understanding, the notice to be provided by the Contracting Officer advising the labor union or workers' representative of the Contractor's commitments under this clause, and post copies of the notice in conspicuous places available to employees and applicants for employment.

(6) The Contractor shall comply with Executive Order 11246, as amended, and the rules, regulations, and orders of the Secretary of Labor.

(7) The Contractor shall furnish to the contracting agency all information required by Executive Order 11246, as amended, and by the rules, regulations, and orders of the Secretary of Labor. The Contractor shall also file Standard Form 100 (EEO-1), or any successor form, as prescribed in 41 CFR part 60-1. Unless the Contractor has filed within the 12 months preceding the date of contract award, the Contractor shall, within 30 days after contract award, apply to either the regional Office of Federal Contract Compliance Programs (OFCCP) or the local office of the Equal Employment Opportunity Commission for the necessary forms.

(8) The Contractor shall permit access to its premises, during normal business hours, by the contracting agency or the OFCCP for the purpose of conducting on-site compliance evaluations and complaint investigations. The

Contractor shall permit the Government to inspect and copy any books, accounts, records (including computerized records), and other material that may be relevant to the matter under investigation and pertinent to compliance with Executive Order 11246, as amended, and rules and regulations that implement the Executive Order.

(9) If the OFCCP determines that the Contractor is not in compliance with this clause or any rule, regulation, or order of the Secretary of Labor, this contract may be canceled, terminated, or suspended in whole or in part and the Contractor may be declared ineligible for further Government contracts, under the procedures authorized in Executive Order 11246, as amended. In addition, sanctions may be imposed and remedies invoked against the Contractor as provided in Executive Order 11246, as amended; in the rules, regulations, and orders of the Secretary of Labor; or as otherwise provided by law.

(10) The Contractor shall include the terms and conditions of subparagraphs (b)(1) through (11) of this clause in every subcontract or purchase order that is not exempted by the rules, regulations, or orders of the Secretary of Labor issued under Executive Order 11246, as amended, so that these terms and conditions will be binding upon each subcontractor or vendor.

(11) The Contractor shall take such action with respect to any subcontract or purchase order as the contracting officer may direct as a means of enforcing these terms and conditions, including sanctions for noncompliance; provided, that if the Contractor becomes involved in, or is threatened with, litigation with a subcontractor or vendor as a result of any direction, the Contractor may request the United States to enter into the litigation to protect the interests of the United States.

(c) Notwithstanding any other clause in this contract, disputes relative to this clause will be governed by the procedures in 41 CFR 60-1.1.

(End of clause)

52.222-27 AFFIRMATIVE ACTION COMPLIANCE REQUIREMENTS FOR CONSTRUCTION (FEB 1999)

(a) Definitions. "Covered area," as used in this clause, means the geographical area described in the solicitation for this contract.

"Deputy Assistant Secretary," as used in this clause, means Deputy Assistant Secretary for Federal Contract Compliance, U.S. Department of Labor, or a designee.

"Employer's identification number," as used in this clause, means the Federal Social Security number used on the employer's quarterly federal tax return, U.S. Treasury Department Form 941.

"Minority," as used in this clause, means--

(1) American Indian or Alaskan Native (all persons having origins in any of the original peoples of North America and maintaining identifiable tribal affiliations through membership and participation or community identification).

(2) Asian and Pacific Islander (all persons having origins in any of the original peoples of the Far East, Southeast Asia, the Indian Subcontinent, or the Pacific Islands);

(3) Black (all persons having origins in any of the black African racial groups not of Hispanic origin); and

(4) Hispanic (all persons of Mexican, Puerto Rican, Cuban, Central or South American, or other Spanish culture or origin, regardless of race).

(b) If the Contractor, or a subcontractor at any tier, subcontracts a portion of the work involving any construction

trade, each such subcontract in excess of $10,000 shall include this clause and the Notice containing the goals for minority and female participation stated in the solicitation for this contract.

(c) If the Contractor is participating in a Hometown Plan (41 CFR 60-4) approved by the U.S. Department of Labor in a covered area, either individually or through an association, its affirmative action obligations on all work in the plan area (including goals) shall comply with the plan for those trades that have unions participating in the plan. Contractors must be able to demonstrate participation in, and compliance with, the provisions of the plan. Each Contractor or subcontractor participating in an approved plan is also required to comply with its obligations under the Equal Opportunity clause, and to make a good faith effort to achieve each goal under the plan in each trade in which it has employees. The overall good-faith performance by other Contractors or subcontractors toward a goal in an approved plan does not excuse any Contractor's or subcontractor's failure to make good-faith efforts to achieve the plan's goals.

(d) The Contractor shall implement the affirmative action procedures in subparagraphs (g)(1) through (16) of this clause. The goals stated in the solicitation for this contract are expressed as percentages of the total hours of employment and training of minority and female utilization that the Contractor should reasonably be able to achieve in each construction trade in which it has employees in the covered area. If the Contractor performs construction work in a geographical area located outside of the covered area, it shall apply the goals established for the geographical area where that work is actually performed. The Contractor is expected to make substantially uniform progress toward its goals in each craft.

(e) Neither the terms and conditions of any collective bargaining agreement, nor the failure by a union with which the Contractor has a collective bargaining agreement, to refer minorities or women shall excuse the Contractor's obligations under this clause, Executive Order 11246, as amended, or the regulations thereunder.

(f) In order for the nonworking training hours of apprentices and trainees to be counted in meeting the goals, apprentices and trainees must be employed by the Contractor during the training period, and the Contractor must have made a commitment to employ the apprentices and trainees at the completion of their training, subject to the availability of employment opportunities. Trainees must be trained pursuant to training programs approved by the U.S. Department of Labor.

(g) The Contractor shall take affirmative action to ensure equal employment opportunity. The evaluation of the Contractor's compliance with this clause shall be based upon its effort to achieve maximum results from its actions. The Contractor shall document these efforts fully and implement affirmative action steps at least as extensive as the following:

(1) Ensure a working environment free of harassment, intimidation, and coercion at all sites and in all facilities where the Contractor's employees are assigned to work. The Contractor, if possible, will assign two or more women to each construction project. The Contractor shall ensure that foremen, superintendents, and other onsite supervisory personnel are aware of and carry out the Contractor's obligation to maintain such a working environment, with specific attention to minority or female individuals working at these sites or facilities.

(2) Establish and maintain a current list of sources for minority and female recruitment. Provide written notification to minority and female recruitment sources and community organizations when the Contractor or its unions have employment opportunities available, and maintain a record of the organizations' responses.

(3) Establish and maintain a current file of the names, addresses, and telephone numbers of each minority and female off-the-street applicant, referrals of minorities or females from unions, recruitment sources, or community organizations, and the action taken with respect to each individual. If an individual was sent to the union hiring hall for referral and not referred back to the Contractor by the union or, if referred back, not employed by the Contractor, this shall be documented in the file, along with whatever additional actions the Contractor may have taken.

(4) Immediately notify the Deputy Assistant Secretary when the union or unions with which the Contractor has a

collective bargaining agreement has not referred back to the Contractor a minority or woman sent by the Contractor, or when the Contractor has other information that the union referral process has impeded the Contractor's efforts to meet its obligations.

(5) Develop on-the-job training opportunities and/or participate in training programs for the area that expressly include minorities and women, including upgrading programs and apprenticeship and trainee programs relevant to the Contractor's employment needs, especially those programs funded or approved by the Department of Labor. The Contractor shall provide notice of these programs to the sources compiled under subparagraph (g)(2) of this clause.

(6) Disseminate the Contractor's equal employment policy by--

(i) Providing notice of the policy to unions and to training, recruitment, and outreach programs, and requesting their cooperation in assisting the Contractor in meeting its contract obligations;

(ii) Including the policy in any policy manual and in collective bargaining agreements;

(iii) Publicizing the policy in the company newspaper, annual report, etc.;

(iv) Reviewing the policy with all management personnel and with all minority and female employees at least once a year; and

(v) Posting the policy on bulletin boards accessible to employees at each location where construction work is performed.

(7) Review, at least annually, the Contractor's equal employment policy and affirmative action obligations with all employees having responsibility for hiring, assignment, layoff, termination, or other employment decisions. Conduct review of this policy with all on-site supervisory personnel before initiating construction work at a job site. A written record shall be made and maintained identifying the time and place of these meetings, persons attending, subject matter discussed, and disposition of the subject matter.

(8) Disseminate the Contractor's equal employment policy externally by including it in any advertising in the news media, specifically including minority and female news media. Provide written notification to, and discuss this policy with, other Contractors and subcontractors with which the Contractor does or anticipates doing business.

(9) Direct recruitment efforts, both oral and written, to minority, female, and community organizations, to schools with minority and female students, and to minority and female recruitment and training organizations serving the Contractor's recruitment area and employment needs. Not later than 1 month before the date for acceptance of applications for apprenticeship or training by any recruitment source, send written notification to organizations such as the above, describing the openings, screening procedures, and tests to be used in the selection process.

(10) Encourage present minority and female employees to recruit minority persons and women. Where reasonable, provide after-school, summer, and vacation employment to minority and female youth both on the site and in other areas of the Contractor's workforce.

(11) Validate all tests and other selection requirements where required under 41 CFR 60-3.

(12) Conduct, at least annually, an inventory and evaluation at least of all minority and female personnel for promotional opportunities. Encourage these employees to seek or to prepare for, through appropriate training, etc., opportunities for promotion.

(13) Ensure that seniority practices, job classifications, work assignments, and other personnel practices do not have a discriminatory effect by continually monitoring all personnel and employment-related activities to ensure that the Contractor's obligations under this contract are being carried out.

(14) Ensure that all facilities and company activities are nonsegregated except that separate or single-user rest rooms and necessary dressing or sleeping areas shall be provided to assure privacy between the sexes.

(15) Maintain a record of solicitations for subcontracts for minority and female construction contractors and suppliers, including circulation of solicitations to minority and female contractor associations and other business associations.

(16) Conduct a review, at least annually, of all supervisors' adherence to and performance under the Contractor's equal employment policy and affirmative action obligations.

(h) The Contractor is encouraged to participate in voluntary associations that may assist in fulfilling one or more of the affirmative action obligations contained in subparagraphs (g)(1) through (16) of this clause. The efforts of a contractor association, joint contractor-union, contractor-community, or similar group of which the contractor is a member and participant may be asserted as fulfilling one or more of its obligations under subparagraphs (g)(1) through (16) of this clause, provided the Contractor--

(1) Actively participates in the group;

(2) Makes every effort to ensure that the group has a positive impact on the employment of minorities and women in the industry;

(3) Ensures that concrete benefits of the program are reflected in the Contractor's minority and female workforce participation;

(4) Makes a good-faith effort to meet its individual goals and timetables; and

(5) Can provide access to documentation that demonstrates the effectiveness of actions taken on behalf of the Contractor. The obligation to comply is the Contractor's, and failure of such a group to fulfill an obligation shall not be a defense for the Contractor's noncompliance.

(i) A single goal for minorities and a separate single goal for women shall be established. The Contractor is required to provide equal employment opportunity and to take affirmative action for all minority groups, both male and female, and all women, both minority and nonminority. Consequently, the Contractor may be in violation of Executive Order 11246, as amended, if a particular group is employed in a substantially disparate manner.

(j) The Contractor shall not use goals or affirmative action standards to discriminate against any person because of race, color, religion, sex, or national origin.

(k) The Contractor shall not enter into any subcontract with any person or firm debarred from Government contracts under Executive Order 11246, as amended.

(l) The Contractor shall carry out such sanctions and penalties for violation of this clause and of the Equal Opportunity clause, including suspension, termination, and cancellation of existing subcontracts, as may be imposed or ordered under Executive Order 11246, as amended, and its implementing regulations, by the OFCCP. Any failure to carry out these sanctions and penalties as ordered shall be a violation of this clause and Executive Order 11246, as amended.

(m) The Contractor in fulfilling its obligations under this clause shall implement affirmative action procedures at least as extensive as those prescribed in paragraph (g) of this clause, so as to achieve maximum results from its efforts to ensure equal employment opportunity. If the Contractor fails to comply with the requirements of Executive Order 11246, as amended, the implementing regulations, or this clause, the Deputy Assistant Secretary shall take action as prescribed in 41 CFR 60-4.8.

(n) The Contractor shall designate a responsible official to--

(1) Monitor all employment-related activity to ensure that the Contractor's equal employment policy is being carried out;

(2) Submit reports as may be required by the Government; and

(3) Keep records that shall at least include for each employee the name, address, telephone number, construction trade, union affiliation (if any), employee identification number, social security number, race, sex, status (e.g., mechanic, apprentice, trainee, helper, or laborer), dates of changes in status, hours worked per week in the indicated trade, rate of pay, and locations at which the work was performed. Records shall be maintained in an easily understandable and retrievable form; however, to the degree that existing records satisfy this requirement, separate records are not required to be maintained.

Nothing contained herein shall be construed as a limitation upon the application of other laws that establish different standards of compliance or upon the requirements for the hiring of local or other area residents (e.g., those under the Public Works Employment Act of 1977 and the Community Development Block Grant Program).

(End of clause)

52.222-35 EQUAL OPPORTUNITY FOR SPECIAL DISABLED VETERANS, VETERANS OF THE VIETNAM ERA, AND OTHER ELIGIBLE VETERANS (DEC 2001)

(a) Definitions. As used in this clause--

All employment openings means all positions except executive and top management, those positions that will be filled from within the Contractor's organization, and positions lasting 3 days or less. This term includes full-time employment, temporary employment of more than 3 days duration, and part-time employment.

Executive and top management means any employee--

(1) Whose primary duty consists of the management of the enterprise in which the individual is employed or of a customarily recognized department or subdivision thereof;

(2) Who customarily and regularly directs the work of two or more other employees;

(3) Who has the authority to hire or fire other employees or whose suggestions and recommendations as to the hiring or firing and as to the advancement and promotion or any other change of status of other employees will be given particular weight;

(4) Who customarily and regularly exercises discretionary powers; and

(5) Who does not devote more than 20 percent or, in the case of an employee of a retail or service establishment, who does not devote more than 40 percent of total hours of work in the work week to activities that are not directly and closely related to the performance of the work described in paragraphs (1) through (4) of this definition. This paragraph (5) does not apply in the case of an employee who is in sole charge of an establishment or a physically separated branch establishment, or who owns at least a 20 percent interest in the enterprise in which the individual is employed.

Other eligible veteran means any other veteran who served on active duty during a war or in a campaign or expedition for which a campaign badge has been authorized.

Positions that will be filled from within the Contractor's organization means employment openings for which the Contractor will give no consideration to persons outside the Contractor's organization (including any affiliates, subsidiaries, and parent companies) and includes any openings the Contractor proposes to fill from regularly established “recall” lists. The exception does not apply to a particular opening once an employer decides to consider applicants outside of its organization.

Qualified special disabled veteran means a special disabled veteran who satisfies the requisite skill, experience, education, and other job-related requirements of the employment position such veteran holds or desires, and who, with or without reasonable accommodation, can perform the essential functions of such position.

Special disabled veteran means--

(1) A veteran who is entitled to compensation (or who but for the receipt of military retired pay would be entitled to compensation) under laws administered by the Department of Veterans Affairs for a disability--

(i) Rated at 30 percent or more; or

(ii) Rated at 10 or 20 percent in the case of a veteran who has been determined under 38 U.S.C. 3106 to have a serious employment handicap (i.e., a significant impairment of the veteran's ability to prepare for, obtain, or retain employment consistent with the veteran's abilities, aptitudes, and interests); or

(2) A person who was discharged or released from active duty because of a service-connected disability.

Veteran of the Vietnam era means a person who--

(1) Served on active duty for a period of more than 180 days and was discharged or released from active duty with other than a dishonorable discharge, if any part of such active duty occurred--

(i) In the Republic of Vietnam between February 28, 1961, and May 7, 1975; or

(ii) Between August 5, 1964, and May 7, 1975, in all other cases; or

(2) Was discharged or released from active duty for a service-connected disability if any part of the active duty was performed--

(i) In the Republic of Vietnam between February 28, 1961, and May 7, 1975; or

(ii) Between August 5, 1964, and May 7, 1975, in all other cases.
(b) General. (1) The Contractor shall not discriminate against the individual because the individual is a special disabled veteran, a veteran of the Vietnam era, or other eligible veteran, regarding any position for which the employee or applicant for employment is qualified. The Contractor shall take affirmative action to employ, advance in employment, and otherwise treat qualified special disabled veterans, veterans of the Vietnam era, and other eligible veterans without discrimination based upon their disability or veterans' status in all employment practices such as--

(i) Recruitment, advertising, and job application procedures;

(ii) Hiring, upgrading, promotion, award of tenure, demotion, transfer, layoff, termination, right of return from layoff and rehiring;

(iii) Rate of pay or any other form of compensation and changes in compensation;

(iv) Job assignments, job classifications, organizational structures, position descriptions, lines of progression, and seniority lists;

(v) Leaves of absence, sick leave, or any other leave;

(vi) Fringe benefits available by virtue of employment, whether or not administered by the Contractor;

(vii) Selection and financial support for training, including apprenticeship, and on-the-job training under 38 U.S.C. 3687, professional meetings, conferences, and other related activities, and selection for leaves of absence to pursue training;

(viii) Activities sponsored by the Contractor including social or recreational programs; and

(ix) Any other term, condition, or privilege of employment.

(2) The Contractor shall comply with the rules, regulations, and relevant orders of the Secretary of Labor issued under the Vietnam Era Veterans' Readjustment Assistance Act of 1972 (the Act), as amended (38 U.S.C. 4211 and 4212).

(c) Listing openings. (1) The Contractor shall immediately list all employment openings that exist at the time of the execution of this contract and those which occur during the performance of this contract, including those not generated by this contract, and including those occurring at an establishment of the Contractor other than the one where the contract is being performed, but excluding those of independently operated corporate affiliates, at an appropriate local public employment service office of the State wherein the opening occurs. Listing employment openings with the U.S. Department of Labor's America's Job Bank shall satisfy the requirement to list jobs with the local employment service office.

(2) The Contractor shall make the listing of employment openings with the local employment service office at least concurrently with using any other recruitment source or effort and shall involve the normal obligations of placing a bona fide job order, including accepting referrals of veterans and nonveterans. This listing of employment openings does not require hiring any particular job applicant or hiring from any particular group of job applicants and is not intended to relieve the Contractor from any requirements of Executive orders or regulations concerning nondiscrimination in employment.

(3) Whenever the Contractor becomes contractually bound to the listing terms of this clause, it shall advise the State public employment agency in each State where it has establishments of the name and location of each hiring location in the State. As long as the Contractor is contractually bound to these terms and has so advised the State agency, it need not advise the State agency of subsequent contracts. The Contractor may advise the State agency when it is no longer bound by this contract clause.

(d) Applicability. This clause does not apply to the listing of employment openings that occur and are filled outside the 50 States, the District of Columbia, the Commonwealth of Puerto Rico, the Commonwealth of the Northern Mariana Islands, American Samoa, Guam, the Virgin Islands of the United States, and Wake Island.

(e) Postings. (1) The Contractor shall post employment notices in conspicuous places that are available to employees and applicants for employment.

(2) The employment notices shall--

(i) State the rights of applicants and employees as well as the Contractor's obligation under the law to take affirmative action to employ and advance in employment qualified employees and applicants who are special disabled veterans, veterans of the Vietnam era, and other eligible veterans; and

(ii) Be in a form prescribed by the Deputy Assistant Secretary for Federal Contract Compliance Programs, Department of Labor (Deputy Assistant Secretary of Labor), and provided by or through the Contracting Officer.

(3) The Contractor shall ensure that applicants or employees who are special disabled veterans are informed of the contents of the notice (e.g., the Contractor may have the notice read to a visually disabled veteran, or may lower the posted notice so that it can be read by a person in a wheelchair).

(4) The Contractor shall notify each labor union or representative of workers with which it has a collective bargaining agreement, or other contract understanding, that the Contractor is bound by the terms of the Act and is committed to take affirmative action to employ, and advance in employment, qualified special disabled veterans, veterans of the Vietnam era, and other eligible veterans.

(f) Noncompliance. If the Contractor does not comply with the requirements of this clause, the Government may take appropriate actions under the rules, regulations, and relevant orders of the Secretary of Labor issued pursuant to the Act.

(g) Subcontracts. The Contractor shall insert the terms of this clause in all subcontracts or purchase orders of $25,000 or more unless exempted by rules, regulations, or orders of the Secretary of Labor. The Contractor shall act as specified by the Deputy Assistant Secretary of Labor to enforce the terms, including action for noncompliance.

(End of clause)

52.222-36 AFFIRMATIVE ACTION FOR WORKERS WITH DISABILITIES (JUN 1998)

(a) General. (1) Regarding any position for which the employee or applicant for employment is qualified, the Contractor shall not discriminate against any employee or applicant because of physical or mental disability. The Contractor agrees to take affirmative action to employ, advance in employment, and otherwise treat qualified individuals with disabilities without discrimination based upon their physical or mental disability in all employment practices such as--

(i) Recruitment, advertising, and job application procedures;

(ii) Hiring, upgrading, promotion, award of tenure, demotion, transfer, layoff, termination, right of return from layoff, and rehiring;

(iii) Rates of pay or any other form of compensation and changes in compensation;

(iv) Job assignments, job classifications, organizational structures, position descriptions, lines of progression, and seniority lists;

(v) Leaves of absence, sick leave, or any other leave;

(vi) Fringe benefits available by virtue of employment, whether or not administered by the Contractor;

(vii) Selection and financial support for training, including apprenticeships, professional meetings, conferences, and other related activities, and selection for leaves of absence to pursue training;

(viii) Activities sponsored by the Contractor, including social or recreational programs; and

(ix) Any other term, condition, or privilege of employment.

(2) The Contractor agrees to comply with the rules, regulations, and relevant orders of the Secretary of Labor (Secretary) issued under the Rehabilitation Act of 1973 (29 U.S.C. 793) (the Act), as amended.

(b) Postings. (1) The Contractor agrees to post employment notices stating--

(i) The Contractor's obligation under the law to take affirmative action to employ and advance in employment qualified individuals with disabilities; and

(ii) The rights of applicants and employees.

(2) These notices shall be posted in conspicuous places that are available to employees and applicants for employment. The Contractor shall ensure that applicants and employees with disabilities are informed of the contents of the notice (e.g., the Contractor may have the notice read to a visually disabled individual, or may lower the posted notice so that it might be read by a person in a wheelchair). The notices shall be in a form prescribed by the Deputy Assistant Secretary for Federal Contract Compliance of the U.S. Department of Labor (Deputy Assistant Secretary) and shall be provided by or through the Contracting Officer.

(3) The Contractor shall notify each labor union or representative of workers with which it has a collective bargaining agreement or other contract understanding, that the Contractor is bound by the terms of Section 503 of the Act and is committed to take affirmative action to employ, and advance in employment, qualified individuals with physical or mental disabilities.

(c) Noncompliance. If the Contractor does not comply with the requirements of this clause, appropriate actions may be taken under the rules, regulations, and relevant orders of the Secretary issued pursuant to the Act.

(d) Subcontracts. The Contractor shall include the terms of this clause in every subcontract or purchase order in excess of $10,000 unless exempted by rules, regulations, or orders of the Secretary. The Contractor shall act as specified by the Deputy Assistant Secretary to enforce the terms, including action for noncompliance.

(End of clause)

52.222-37 EMPLOYMENT REPORTS ON SPECIAL DISABLED VETERANS, VETERANS OF THE VIETNAM ERA, AND OTHER ELIGIBLE VETERANS (DEC 2001)

(a) Unless the Contractor is a State or local government agency, the Contractor shall report at least annually, as required by the Secretary of Labor, on--

(1) The number of disabled veterans and the number of veterans of the Vietnam era in the workforce of the contractor by job category and hiring location; and

(2) The total number of new employees hired during the period covered by the report, and of that total, the number of disabled veterans, and the number of veterans of the Vietnam era.

(b) The above items shall be reported by completing the form entitled "Federal Contractor Veterans' Employment Report VETS-100."

(c) Reports shall be submitted no later than September 30 of each year beginning September 30, 1988.

(d) The employment activity report required by paragraph (a)(2) of this clause shall reflect total hires during the most recent 12-month period as of the ending date selected for the employment profile report required by paragraph (a)(1) of this clause. Contractors may select an ending date: (1) As of the end of any pay period during the period January through March 1st of the year the report is due, or (2) as of December 31, if the contractor has previous written approval from the Equal Employment Opportunity Commission to do so for purposes of submitting the Employer Information Report EEO-1 (Standard Form 100).

(e) The count of veterans reported according to paragraph (a) of this clause shall be based on voluntary disclosure. Each Contractor subject to the reporting requirements at 38 U.S.C. 4212 shall invite all disabled veterans and

veterans of the Vietnam era who wish to benefit under the affirmative action program at 38 U.S.C. 4212 to identify themselves to the Contractor. The invitation shall state that the information is voluntarily provided; that the information will be kept confidential; that disclosure or refusal to provide the information will not subject the applicant or employee to any adverse treatment; and that the information will be used only in accordance with the regulations promulgated under 38 U.S.C. 4212.

(f) Subcontracts. The Contractor shall include the terms of this clause in every subcontract or purchase order of $10,000 or more unless exempted by rules, regulations, or orders of the Secretary.

(End of clause)

52.223-5 POLLUTION PREVENTION AND RIGHT-TO-KNOW INFORMATION (AUG 2003)

(a) Definitions. As used in this clause--

Priority chemical means a chemical identified by the Interagency Environmental Leadership Workgroup or, alternatively, by an agency pursuant to section 503 of Executive Order 13148 of April 21, 2000, Greening the Government through Leadership in Environmental Management.

“Toxic chemical means a chemical or chemical category listed in 40 CFR 372.65.”

(b) Executive Order 13148 requires Federal facilities to comply with the provisions of the Emergency Planning and Community Right-to-Know Act of 1986 (EPCRA) (42 U.S.C. 11001-11050) and the Pollution Prevention Act of 1990 (PPA) (42 U.S.C. 13101-13109).

(c) The Contractor shall provide all information needed by the Federal facility to comply with the following:

(1) The emergency planning reporting requirements of section 302 of EPCRA.

(2) The emergency notice requirements of section 304 of EPCRA.

(3) The list of Material Safety Data Sheets, required by section 311 of EPCRA.

(4) The emergency and hazardous chemical inventory forms of section 312 of EPCRA.

(5) The toxic chemical release inventory of section 313 of EPCRA, which includes the reduction and recycling information required by section 6607 of PPA.

(6) The toxic chemical, priority chemical, and hazardous substance release and use reduction goals of sections 502 and 503 of Executive Order 13148.

(End of clause)

52.223-6 DRUG-FREE WORKPLACE (MAY 2001)

(a) Definitions. As used in this clause --

"Controlled substance" means a controlled substance in schedules I through V of section 202 of the Controlled Substances Act (21 U.S.C. 812) and as further defined in regulation at 21 CFR 1308.11 - 1308.15.

"Conviction" means a finding of guilt (including a plea of nolo contendere) or imposition of sentence, or both, by any judicial body charged with the responsibility to deter- mine violations of the Federal or State criminal drug statutes.

"Criminal drug statute" means a Federal or non-Federal criminal statute involving the manufacture, distribution, dispensing, possession, or use of any controlled substance.

"Drug-free workplace" means the site(s) for the performance of work done by the Contractor in connection with a specific contract at which employees of the Contractor are prohibited from engaging in the unlawful manufacture, distribution, dispensing, possession, or use of a controlled substance.

"Employee" means an employee of a Contractor directly engaged in the performance of work under a Government contract. "Directly engaged" is defined to include all direct cost employees and any other Contractor employee who has other than a minimal impact or involvement in contract performance.

"Individual" means an offeror/contractor that has no more than one employee including the offeror/contractor.

(b) The Contractor, if other than an individual, shall-- within 30 days after award (unless a longer period is agreed to in writing for contracts of 30 days or more performance duration), or as soon as possible for contracts of less than 30 days performance duration--

(1) Publish a statement notifying its employees that the unlawful manufacture, distribution, dispensing, possession, or use of a controlled substance is prohibited in the Contractor's workplace and specifying the actions that will be taken against employees for violations of such prohibition;

(2) Establish an ongoing drug-free awareness program to inform such employees about--

(i) The dangers of drug abuse in the workplace;

(ii) The Contractor's policy of maintaining a drug-free workplace;

(iii) Any available drug counseling, rehabilitation, and employee assistance programs; and

(iv) The penalties that may be imposed upon employees for drug abuse violations occurring in the workplace;

(3) Provide all employees engaged in performance of the contract with a copy of the statement required by subparagraph (b)(1) of this clause;

(4) Notify such employees in writing in the statement required by subparagraph (b)(1) of this clause that, as a condition of continued employment on this contract, the employee will--

(i) Abide by the terms of the statement; and

(ii) Notify the employer in writing of the employee's conviction under a criminal drug statute for a violation occurring in the workplace no later than 5 days after such conviction.

(5) Notify the Contracting Officer in writing within 10 days after receiving notice under subdivision (b)(4)(ii) of this clause, from an employee or otherwise receiving actual notice of such conviction. The notice shall include the position title of the employee;

(6) Within 30 days after receiving notice under subdivision (b)(4)(ii) of this clause of a conviction, take one of the following actions with respect to any employee who is convicted of a drug abuse violation occurring in the workplace:

(i) Taking appropriate personnel action against such employee, up to and including termination; or

(ii) Require such employee to satisfactorily participate in a drug abuse assistance or rehabilitation program approved for such purposes by a Federal, State, or local health, law enforcement, or other appropriate agency; and

(7) Make a good faith effort to maintain a drug-free workplace through implementation of subparagraphs (b)(1) though (b)(6) of this clause.

(c) The Contractor, if an individual, agrees by award of the contract or acceptance of a purchase order, not to engage in the unlawful manufacture, distribution, dispensing, possession, or use of a controlled substance while performing this contract.

(d) In addition to other remedies available to the Government, the Contractor's failure to comply with the requirements of paragraph (b) or (c) of this clause may, pursuant to FAR 23.506, render the Contractor subject to suspension of contract payments, termination of the contract for default, and suspension or debarment.

(End of clause)

52.223-14 TOXIC CHEMICAL RELEASE REPORTING (AUG 2003)

(a) Unless otherwise exempt, the Contractor, as owner or operator of a facility used in the performance of this contract, shall file by July 1 for the prior calendar year an annual Toxic Chemical Release Inventory Form (Form R) as described in sections 313(a) and (g) of the Emergency Planning and Community Right-to-Know Act of 1986 (EPCRA) (42 U.S.C. 11023(a) and (g)), and section 6607 of the Pollution Prevention Act of 1990 (PPA) (42 U.S.C. 13106). The Contractor shall file, for each facility subject to the Form R filing and reporting requirements, the annual Form R throughout the life of the contract.

(b) A Contractor-owned or -operated facility used in the performance of this contract is exempt from the requirement to file an annual Form R if--

(1) The facility does not manufacture, process, or otherwise use any toxic chemicals listed in 40 CFR 372.65;

(2) The facility does not have 10 or more full-time employees as specified in section 313(b)(1)(A) of EPCRA, 42 U.S.C. 11023(b)(1)(A);

(3) The facility does not meet the reporting thresholds of toxic chemicals established under of EPCRA, 42 U.S.C. 11023(f) (including the alternate thresholds at 40 CFR 372.27, provided an appropriate certification form has been filed with EPA);

(4) The facility does not fall within the following Standard Industrial Classification (SIC) codes or their corresponding North American Industry Classification System sectors:

(i) Major group code 10 (except 1011, 1081, and 1094.

(ii) Major group code 12 (except 1241).

(iii) Major group codes 20 through 39.

(iv) Industry code 4911, 4931, or 4939 (limited to facilities that combust coal and/or oil for the purpose of generating power for distribution in commerce).

(v) Industry code 4953 (limited to facilities regulated under the Resource Conservation and Recovery Act, Subtitle C (42 U.S.C. 6921, et seq.)), 5169, 5171, or 7389 (limited to facilities primarily engaged in solvent recovery services on a contract or fee basis); or

(5) The facility is not located in the United States or its outlying areas.

(c) If the Contractor has certified to an exemption in accordance with one or more of the criteria in paragraph (b) of this clause, and after award of the contract circumstances change so that any of its owned or operated facilities used in the performance of this contract is no longer exempt--

(1) The Contractor shall notify the Contracting Officer; and

(2) The Contractor, as owner or operator of a facility used in the performance of this contract that is no longer exempt, shall (i) submit a Toxic Chemical Release Inventory Form (Form R) on or before July 1 for the prior calendar year during which the facility becomes eligible; and (ii) continue to file the annual Form R for the life of the contract for such facility.

(d) The Contracting Officer may terminate this contract or take other action as appropriate, if the Contractor fails to comply accurately and fully with the EPCRA and PPA toxic chemical release filing and reporting requirements.

(e) Except for acquisitions of commercial items, as defined in FAR Part 2, the Contractor shall--

(1) For competitive subcontracts expected to exceed $100,000 (including all options), include a solicitation provision substantially the same as the provision at FAR 52.223-13, Certification of Toxic Chemical Release Reporting; and

(2) Include in any resultant subcontract exceeding $100,000 (including all options), the substance of this clause, except this paragraph (e).

(End of clause)

52.225-9 BUY AMERICAN ACT—CONSTRUCTION MATERIALS (JUN 2003)

(a) Definitions. As used in this clause--

Component means an article, material, or supply incorporated directly into a construction material.

Construction material means an article, material, or supply brought to the construction site by the Contractor or a subcontractor for incorporation into the building or work. The term also includes an item brought to the site preassembled from articles, materials, or supplies. However, emergency life safety systems, such as emergency lighting, fire alarm, and audio evacuation systems, that are discrete systems incorporated into a public building or work and that are produced as complete systems, are evaluated as a single and distinct construction material regardless of when or how the individual parts or components of those systems are delivered to the construction site. Materials purchased directly by the Government are supplies, not construction material.

Cost of components means--

(1) For components purchased by the Contractor, the acquisition cost, including transportation costs to the place of incorporation into the construction material (whether or not such costs are paid to a domestic firm), and any applicable duty (whether or not a duty-free entry certificate is issued); or

(2) For components manufactured by the Contractor, all costs associated with the manufacture of the component, including transportation costs as described in paragraph (1) of this definition, plus allocable overhead costs, but excluding profit. Cost of components does not include any costs associated with the manufacture of the end product.

Domestic construction material means--

(1) An unmanufactured construction material mined or produced in the United States; or

(2) A construction material manufactured in the United States, if the cost of its components mined, produced, or manufactured in the United States exceeds 50 percent of the cost of all its components. Components of foreign origin of the same class or kind for which nonavailability determinations have been made are treated as domestic.

Foreign construction material means a construction material other than a domestic construction material.

United States means the 50 States, the District of Columbia, and outlying areas.

(b) Domestic preference. (1) This clause implements the Buy American Act (41 U.S.C. 10a-10d) by providing a preference for domestic construction material. The Contractor shall use only domestic construction material in performing this contract, except as provided in paragraphs (b)(2) and (b)(3) of this clause.

(2) This requirement does not apply to the construction material or components listed by the Government as follows: NONE
(3) The Contracting Officer may add other foreign construction material to the list in paragraph (b)(2) of this clause if the Government determines that

(i) The cost of domestic construction material would be unreasonable. The cost of a particular domestic construction material subject to the requirements of the Buy American Act is unreasonable when the cost of such material exceeds the cost of foreign material by more than 6 percent;

(ii) The application of the restriction of the Buy American Act to a particular construction material would be impracticable or inconsistent with the public interest; or

(iii) The construction material is not mined, produced, or manufactured in the United States in sufficient and reasonably available commercial quantities of a satisfactory quality.

(c) Request for determination of inapplicability of the Buy American Act. (1)(i) Any Contractor request to use foreign construction material in accordance with paragraph (b)(3) of this clause shall include adequate information for Government evaluation of the request, including--

(A) A description of the foreign and domestic construction materials;

(B) Unit of measure;

(C) Quantity;

(D) Price;

(E) Time of delivery or availability;

(F) Location of the construction project;

(G) Name and address of the proposed supplier; and

(H) A detailed justification of the reason for use of foreign construction materials cited in accordance with paragraph (b)(3) of this clause.

(ii) A request based on unreasonable cost shall include a reasonable survey of the market and a completed price comparison table in the format in paragraph (d) of this clause.

(iii) The price of construction material shall include all delivery costs to the construction site and any applicable duty (whether or not a duty-free certificate may be issued).

(iv) Any Contractor request for a determination submitted after contract award shall explain why the Contractor could not reasonably foresee the need for such determination and could not have requested the determination before contract award. If the Contractor does not submit a satisfactory explanation, the Contracting Officer need not make a determination.

(2) If the Government determines after contract award that an exception to the Buy American Act applies and the Contracting Officer and the Contractor negotiate adequate consideration, the Contracting Officer will modify the contract to allow use of the foreign construction material. However, when the basis for the exception is the unreasonable price of a domestic construction material, adequate consideration is not less than the differential established in paragraph (b)(3)(i) of this clause.

(3) Unless the Government determines that an exception to the Buy American Act applies, use of foreign construction material is noncompliant with the Buy American Act.

(d) Data. To permit evaluation of requests under paragraph (c) of this clause based on unreasonable cost, the Contractor shall include the following information and any applicable supporting data based on the survey of suppliers:

Foreign and Domestic Construction Materials Price Comparison

Construction material description	Unit of measure	Quantity	Price (dollars) \1\
Item 1			
Foreign construction material....	.....	.....	.....
Domestic construction material...	.....	.....	.....
Item 2			
Foreign construction material....	.....	.....	.....
Domestic construction material...	.....	.....	.....

Include all delivery costs to the construction site and any applicable duty (whether or not a duty-free entry certificate is issued).
List name, address, telephone number, and contact for suppliers surveyed. Attach copy of response; if oral, attach summary.
Include other applicable supporting information.

(End of clause)

52.225-13 RESTRICTIONS ON CERTAIN FOREIGN PURCHASES (DEC 2003)

(a) Except as authorized by the Office of Foreign Assets Control (OFAC) in the Department of the Treasury, the Contractor shall not acquire, for use in the performance of this contract, any supplies or services if any proclamation, Executive order, or statute administered by OFAC, or if OFAC's implementing regulations at 31 CFR chapter V, would prohibit such a transaction by a person subject to the jurisdiction of the United States.

(b) Except as authorized by OFAC, most transactions involving Cuba, Iran, Libya, and Sudan are prohibited, as are most imports from North Korea, into the United States or its outlying areas. Lists of entities and individuals subject to economic sanctions are included in OFAC's List of Specially Designated Nationals and Blocked Persons at TerList1.html. More information about these restrictions, as well as updates, is available in the OFAC's regulations at 31 CFR chapter V and/or on OFAC's Web site at http://www.treas.gov/ofac.

(c) The Contractor shall insert this clause, including this paragraph (c), in all subcontracts.

(End of clause)

52.227-1 AUTHORIZATION AND CONSENT (JUL 1995)

(a) The Government authorizes and consents to all use and manufacture, in performing this contract or any subcontract at any tier, of any invention described in and covered by a United States patent (1) embodied in the structure or composition of any article the delivery of which is accepted by the Government under this contract or (2) used in machinery, tools, or methods whose use necessarily results from compliance by the Contractor or a subcontractor with (i) specifications or written provisions forming a part of this contract or (ii) specific written instructions given by the Contracting Officer directing the manner of performance. The entire liability to the Government for infringement of a patent of the United States shall be determined solely by the provisions of the indemnity clause, if any, included in this contract or any subcontract hereunder (including any lower-tier subcontract), and the Government assumes liability for all other infringement to the extent of the authorization and consent hereinabove granted.

(b) The Contractor agrees to include, and require inclusion of, this clause, suitably modified to identify the parties, in all subcontracts at any tier for supplies or services (including construction, architect-engineer services, and materials, supplies, models, samples, and design or testing services expected to exceed the simplified acquisition threshold (however, omission of this clause from any subcontract, including those at or below the simplified acquisition threshold, does not affect this authorization and consent.)

(End of clause)

52.227-2 NOTICE AND ASSISTANCE REGARDING PATENT AND COPYRIGHT INFRINGEMENT (AUG 1996)

(a) The Contractor shall report to the Contracting Officer, promptly and in reasonable written detail, each notice or claim of patent or copyright infringement based on the performance of this contract of which the Contractor has knowledge.

(b) In the event of any claim or suit against the Government on account of any alleged patent or copyright infringement arising out of the performance of this contract or out of the use of any supplies furnished or work or services performed under this contract, the Contractor shall furnish to the Government, when requested by the Contracting Officer, all evidence and information in possession of the Contractor pertaining to such suit or claim. Such evidence and information shall be furnished at the expense of the Government except where the Contractor has agreed to indemnify the Government.

54 The Contractor agrees to include, and require inclusion of, this clause in all subcontracts at any tier for supplies or services (including construction and architect-engineer subcontracts and those for material, supplies,

models, samples, or design or testing services) expected to exceed the simplified acquisition threshold at (FAR) 2.101.to exceed the dollar amount set forth in 13.000 of the Federal Acquisition Regulation (FAR).

(End of clause)

52.228-1 BID GUARANTEE (SEP 1996)

(a) Failure to furnish a bid guarantee in the proper form and amount, by the time set for opening of bids, may be cause for rejection of the bid.

(b) The bidder shall furnish a bid guarantee in the form of a firm commitment, e.g., bid bond supported by good and sufficient surety or sureties acceptable to the Government, postal money order, certified check, cashier's check, irrevocable letter of credit, or, under Treasury Department regulations, certain bonds or notes of the United States. The Contracting Officer will return bid guarantees, other than bid bonds, (1) to unsuccessful bidders as soon as practicable after the opening of bids, and (2) to the successful bidder upon execution of contractual documents and bonds (including any necessary coinsurance or reinsurance agreements), as required by the bid as accepted.-

(c) The amount of the bid guarantee shall be 20 percent of the bid price or $3 Million, whichever is less.-

(d) If the successful bidder, upon acceptance of its bid by the Government within the period specified for acceptance, fails to execute all contractual documents or furnish executed bond(s) within 10 days after receipt of the forms by the bidder, the Contracting Officer may terminate the contract for default.-

(e) In the event the contract is terminated for default, the bidder is liable for any cost of acquiring the work that exceeds the amount of its bid, and the bid guarantee is available to offset the difference.

(End of clause)

52.228-2 ADDITIONAL BOND SECURITY (OCT 1997)

The Contractor shall promptly furnish additional security required to protect the Government and persons supplying labor or materials under this contract if--

(a) Any surety upon any bond, or issuing financial institution for other security, furnished with this contract becomes unacceptable to the Government.

(b) Any surety fails to furnish reports on its financial condition as required by the Government;

(c) The contract price is increased so that the penal sum of any bond becomes inadequate in the opinion of the Contracting Officer; or

(d) An irrevocable letter of credit (ILC) used as security will expire before the end of the period of required security. If the Contractor does not furnish an acceptable extension or replacement ILC, or other acceptable substitute, at least 30 days before an ILC's scheduled expiration, the Contracting officer has the right to immediately draw on the ILC.

(End of clause)

52.228-5 INSURANCE--WORK ON A GOVERNMENT INSTALLATION (JAN 1997)

(a) The Contractor shall, at its own expense, provide and maintain during the entire performance of this contract, at least the kinds and minimum amounts of insurance required in the Schedule or elsewhere in the contract.

(b) Before commencing work under this contract, the Contractor shall notify the Contracting Officer in writing that the required insurance has been obtained. The policies evidencing required insurance shall contain an endorsement to the effect that any cancellation or any material change adversely affecting the Government's interest shall not be effective (1) for such period as the laws of the State in which this contract is to be performed prescribe, or (2) until 30 days after the insurer or the Contractor gives written notice to the Contracting Officer, whichever period is longer.

(c) The Contractor shall insert the substance of this clause, including this paragraph (c), in subcontracts under this contract that require work on a Government installation and shall require subcontractors to provide and maintain the insurance required in the Schedule or elsewhere in the contract. The Contractor shall maintain a copy of all subcontractors' proofs of required insurance, and shall make copies available to the Contracting Officer upon request.

(End of clause)

52.228-11 PLEDGES OF ASSETS (FEB 1992)

(a) Offerors shall obtain from each person acting as an individual surety on a bid guarantee, a performance bond, or a payment bond--

(1) Pledge of assets; and

(2) Standard Form 28, Affidavit of Individual Surety.

(b) Pledges of assets from each person acting as an individual surety shall be in the form of--

(1) Evidence of an escrow account containing cash, certificates of deposit, commercial or Government securities, or other assets described in FAR 28.203-2 (except see 28.203-2(b)(2) with respect to Government securities held in book entry form) and/or;

(2) A recorded lien on real estate. The offeror will be required to provide--

(i) Evidence of title in the form of a certificate of title prepared by a title insurance company approved by the United States Department of Justice. This title evidence must show fee simple title vested in the surety along with any concurrent owners; whether any real estate taxes are due and payable; and any recorded encumbrances against the property, including the lien filed in favor of the Government as required by FAR 28.203-3(d);

(ii) Evidence of the amount due under any encumbrance shown in the evidence of title;

(iii) A copy of the current real estate tax assessment of the property or a current appraisal dated no earlier than 6 months prior to the date of the bond, prepared by a professional appraiser who certifies that the appraisal has been conducted in accordance with the generally accepted appraisal standards as reflected in the Uniform Standards of Professional Appraisal Practice, as promulgated by the Appraisal Foundation.

(End of clause)

52.228-12 PROSPECTIVE SUBCONTRACTOR REQUESTS FOR BONDS. (OCT 1995)

In accordance with Section 806(a)(3) of Pub. L. 102-190, as amended by Sections 2091 and 8105 of Pub. L. 103-355, upon the request of a prospective subcontractor or supplier offering to furnish labor or material for the performance of this contract for which a payment bond has been furnished to the Government pursuant to the Miller Act, the Contractor shall promptly provide a copy of such payment bond to the requester.

(End of clause)

52.228-14 IRREVOCABLE LETTER OF CREDIT (DEC 1999)

(a) “Irrevocable letter of credit” (ILC), as used in this clause, means a written commitment by a federally insured financial institution to pay all or part of a stated amount of money, until the expiration date of the letter, upon presentation by the Government (the beneficiary) of a written demand therefor. Neither the financial institution nor the offeror/Contractor can revoke or condition the letter of credit.

(b) If the offeror intends to use an ILC in lieu of a bid bond, or to secure other types of bonds such as performance and payment bonds, the letter of credit and letter of confirmation formats in paragraphs (e) and (f) of this clause shall be used.

(c) The letter of credit shall be irrevocable, shall require presentation of no document other than a written demand and the ILC (including confirming letter, if any), shall be issued/confirmed by an acceptable federally insured financial institution as provided in paragraph (d) of this clause, and--

(1) If used as a bid guarantee, the ILC shall expire no earlier than 60 days after the close of the bid acceptance period;

(2) If used as an alternative to corporate or individual sureties as security for a performance or payment bond, the offeror/Contractor may submit an ILC with an initial expiration date estimated to cover the entire period for which financial security is required or may submit an ILC with an initial expiration date that is a minimum period of one year from the date of issuance. The ILC shall provide that, unless the issuer provides the beneficiary written notice of non-renewal at least 60 days in advance of the current expiration date, the ILC is automatically extended without amendment for one year from the expiration date, or any future expiration date, until the period of required coverage is completed and the Contracting Officer provides the financial institution with a written statement waiving the right to payment. The period of required coverage shall be:

(i) For contracts subject to the Miller Act, the later of--

(A) One year following the expected date of final payment;

(B) For performance bonds only, until completion of any warranty period; or

(C) For payment bonds only, until resolution of all claims filed against the payment bond during the one-year period following final payment.

(ii) For contracts not subject to the Miller Act, the later of--

(A) 90 days following final payment; or

(B) For performance bonds only, until completion of any warranty period.

(d) Only federally insured financial institutions rated investment grade or higher shall issue or confirm the ILC. The offeror/Contractor shall provide the Contracting Officer a credit rating that indicates the financial institution has the

required rating(s) as of the date of issuance of the ILC. Unless the financial institution issuing the ILC had letter of credit business of less than $25 million in the past year, ILCs over $5 million must be confirmed by another acceptable financial institution that had letter of credit business of less than $25 million in the past year.

(e) The following format shall be used by the issuing financial institution to create an ILC:

_____

[Issuing Financial Institution's Letterhead or Name and Address]

Issue Date _____

IRREVOCABLE LETTER OF CREDIT NO. _____

Account party's name _____

Account party's address _____

For Solicitation No. _____(for reference only)

TO: [U.S. Government agency]

[U.S. Government agency's address]

1. We hereby establish this irrevocable and transferable Letter of Credit in your favor for one or more drawings up to United States $_____. This Letter of Credit is payable at [issuing financial institution's and, if any, confirming financial institution's] office at [issuing financial institution's address and, if any, confirming financial institution's address] and expires with our close of business on _____, or any automatically extended expiration date.

2. We hereby undertake to honor your or the transferee's sight draft(s) drawn on the issuing or, if any, the confirming financial institution, for all or any part of this credit if presented with this Letter of Credit and confirmation, if any, at the office specified in paragraph 1 of this Letter of Credit on or before the expiration date or any automatically extended expiration date.

3. [This paragraph is omitted if used as a bid guarantee, and subsequent paragraphs are renumbered.] It is a condition of this Letter of Credit that it is deemed to be automatically extended without amendment for one year from the expiration date hereof, or any future expiration date, unless at least 60 days prior to any expiration date, we notify you or the transferee by registered mail, or other receipted means of delivery, that we elect not to consider this Letter of Credit renewed for any such additional period. At the time we notify you, we also agree to notify the account party (and confirming financial institution, if any) by the same means of delivery.

4. This Letter of Credit is transferable. Transfers and assignments of proceeds are to be effected without charge to either the beneficiary or the transferee/assignee of proceeds. Such transfer or assignment shall be only at the written direction of the Government (the beneficiary) in a form satisfactory to the issuing financial institution and the confirming financial institution, if any.

5. This Letter of Credit is subject to the Uniform Customs and Practice (UCP) for Documentary Credits, 1993 Revision, International Chamber of Commerce Publication No. 500, and to the extent not inconsistent therewith, to the laws of _____ [state of confirming financial institution, if any, otherwise state of issuing financial institution].

6. If this credit expires during an interruption of business of this financial institution as described in Article 17 of the UCP, the financial institution specifically agrees to effect payment if this credit is drawn against within 30 days after the resumption of our business.

Sincerely,

_____

[Issuing financial institution]

(f) The following format shall be used by the financial institution to confirm an ILC:

_____
[Confirming Financial Institution's Letterhead or Name and Address]

(Date) _____

Our Letter of Credit Advice Number _____

Beneficiary: _____ [U.S. Government agency]

Issuing Financial Institution: _____

Issuing Financial Institution's LC No.: _____

Gentlemen:

1. We hereby confirm the above indicated Letter of Credit, the original of which is attached, issued by _____ [name of issuing financial institution] for drawings of up to United States dollars _____/U.S. $_____ and expiring with our close of business on _____ [the expiration date], or any automatically extended expiration date.

2. Draft(s) drawn under the Letter of Credit and this Confirmation are payable at our office located at _____.

3. We hereby undertake to honor sight draft(s) drawn under and presented with the Letter of Credit and this Confirmation at our offices as specified herein.

4. [This paragraph is omitted if used as a bid guarantee, and subsequent paragraphs are renumbered.] It is a condition of this confirmation that it be deemed automatically extended without amendment for one year from the expiration date hereof, or any automatically extended expiration date, unless:

(a) At least 60 days prior to any such expiration date, we shall notify the Contracting Officer, or the transferee and the issuing financial institution, by registered mail or other receipted means of delivery, that we elect not to consider this confirmation extended for any such additional period; or

(b) The issuing financial institution shall have exercised its right to notify you or the transferee, the account party, and ourselves, of its election not to extend the expiration date of the Letter of Credit.

5. This confirmation is subject to the Uniform Customs and Practice (UCP) for Documentary Credits, 1993 Revision, International Chamber of Commerce Publication No. 500, and to the extent not inconsistent therewith, to the laws of _____ [state of confirming financial institution].

6. If this confirmation expires during an interruption of business of this financial institution as described in Article 17 of the UCP, we specifically agree to effect payment if this credit is drawn against within 30 days after the resumption of our business.

Sincerely,

_____

[Confirming financial institution]

(g) The following format shall be used by the Contracting Officer for a sight draft to draw on the Letter of Credit:

SIGHT DRAFT

_____

[City, State]

(Date) _____

[Name and address of financial institution]

Pay to the order of _____ [Beneficiary Agency] _____ the sum of United States $_____.
This draft is drawn under Irrevocable Letter of Credit No. _____.

_____

[Beneficiary Agency]

By: _____

(End of clause)

52.228-15 PERFORMANCE AND PAYMENT BONDS--CONSTRUCTION (JUL 2000)-

(a) Definitions. As used in this clause--

Original contract price means the award price of the contract; or, for requirements contracts, the price payable for the estimated total quantity; or, for indefinite-quantity contracts, the price payable for the specified minimum quantity. Original contract price does not include the price of any options, except those options exercised at the time of contract award.

(b) Amount of required bonds. Unless the resulting contract price is $100,000 or less, the successful offeror shall furnish performance and payment bonds to the Contracting Officer as follows:

(1) Performance bonds (Standard Form 25). The penal amount of performance bonds at the time of contract award shall be 100 percent of the original contract price.

(2) Payment Bonds (Standard Form 25-A). The penal amount of payment bonds at the time of contract award shall be 100 percent of the original contract price.

(3) Additional bond protection. (i) The Government may require additional performance and payment bond protection if the contract price is increased. The increase in protection generally will equal 100 percent of the increase in contract price.

(ii) The Government may secure the additional protection by directing the Contractor to increase the penal amount of the existing bond or to obtain an additional bond.

(c) Furnishing executed bonds. The Contractor shall furnish all executed bonds, including any necessary reinsurance agreements, to the Contracting Officer, within the time period specified in the Bid Guarantee provision of the solicitation, or otherwise specified by the Contracting Officer, but in any event, before starting work.

(d) Surety or other security for bonds. The bonds shall be in the form of firm commitment, supported by corporate sureties whose names appear on the list contained in Treasury Department Circular 570, individual sureties, or by other acceptable security such as postal money order, certified check, cashier's check, irrevocable letter of credit, or, in accordance with Treasury Department regulations, certain bonds or notes of the United States. Treasury Circular 570 is published in the Federal Register or may be obtained from the U.S. Department of Treasury, Financial Management Service, Surety Bond Branch, 401 14th Street, NW, 2nd Floor, West Wing, Washington, DC 20227.

(e) Notice of subcontractor waiver of protection (40 U.S.C. 270b(c). Any waiver of the right to sue on the payment bond is void unless it is in writing, signed by the person whose right is waived, and executed after such person has first furnished labor or material for use in the performance of the contract.

(End of clause)

52.229-3 FEDERAL, STATE, AND LOCAL TAXES (APR 2003)

(a) As used in this clause--

"Contract date" means the date set for bid opening or, if this is a negotiated contract or a modification, the effective date of this contract or modification.

"All applicable Federal, State, and local taxes and duties" means all taxes and duties, in effect on the contract date, that the taxing authority is imposing and collecting on the transactions or property covered by this contract.

"After-imposed Federal tax" means any new or increased Federal excise tax or duty, or tax that was exempted or excluded on the contract date but whose exemption was later revoked or reduced during the contract period, on the transactions or property covered by this contract that the Contractor is required to pay or bear as the result of legislative, judicial, or administrative action taking effect after the contract date. It does not include social security tax or other employment taxes.

"After-relieved Federal tax" means any amount of Federal excise tax or duty, except social security or other employment taxes, that would otherwise have been payable on the transactions or property covered by this contract, but which the Contractor is not required to pay or bear, or for which the Contractor obtains a refund or drawback, as the result of legislative, judicial, or administrative action taking effect after the contract date.

Local taxes includes taxes imposed by a possession or territory of the United States, Puerto Rico, or the Northern Mariana Islands, if the contract is performed wholly or partly in any of those areas.

(b) The contract price includes all applicable Federal, State, and local taxes and duties.

(c) The contract price shall be increased by the amount of any after-imposed Federal tax, provided the Contractor warrants in writing that no amount for such newly imposed Federal excise tax or duty or rate increase was included in the contract price, as a contingency reserve or otherwise.

(d) The contract price shall be decreased by the amount of any after-relieved Federal tax.

(e) The contract price shall be decreased by the amount of any Federal excise tax or duty, except social security or other employment taxes, that the Contractor is required to pay or bear, or does not obtain a refund of, through the

Contractor's fault, negligence, or failure to follow instructions of the Contracting Officer.

(f) No adjustment shall be made in the contract price under this clause unless the amount of the adjustment exceeds $250.

(g) The Contractor shall promptly notify the Contracting Officer of all matters relating to any Federal excise tax or duty that reasonably may be expected to result in either an increase or decrease in the contract price and shall take appropriate action as the Contracting Officer directs.

(h) The Government shall, without liability, furnish evidence appropriate to establish exemption from any Federal, State, or local tax when the Contractor requests such evidence and a reasonable basis exists to sustain the exemption.

(End of clause)

52.232-5 PAYMENTS UNDER FIXED-PRICE CONSTRUCTION CONTRACTS (SEP 2002)

(a) Payment of price. The Government shall pay the Contractor the contract price as provided in this contract.

(b) Progress payments. The Government shall make progress payments monthly as the work proceeds, or at more frequent intervals as determined by the Contracting Officer, on estimates of work accomplished which meets the standards of quality established under the contract, as approved by the Contracting Officer.

(1) The Contractor's request for progress payments shall include the following substantiation:

(i) An itemization of the amounts requested, related to the various elements of work required by the contract covered by the payment requested.

(ii) A listing of the amount included for work performed by each subcontractor under the contract.

(iii) A listing of the total amount of each subcontract under the contract.

(iv) A listing of the amounts previously paid to each such subcontractor under the contract.

(v) Additional supporting data in a form and detail required by the Contracting Officer.

(2) In the preparation of estimates, the Contracting Officer may authorize material delivered on the site and preparatory work done to be taken into consideration. Material delivered to the Contractor at locations other than the site also may be taken into consideration if--

(i) Consideration is specifically authorized by this contract; and

(ii) The Contractor furnishes satisfactory evidence that it has acquired title to such material and that the material will be used to perform this contract.

(c) Contractor certification. Along with each request for progress payments, the Contractor shall furnish the following certification, or payment shall not be made: (However, if the Contractor elects to delete paragraph (c)(4) from the certification, the certification is still acceptable.)

I hereby certify, to the best of my knowledge and belief, that--

(1) The amounts requested are only for performance in accordance with the specifications, terms, and conditions of

the contract;

(2) All payments due to subcontractors and suppliers from previous payments received under the contract have been made, and timely payments will be made from the proceeds of the payment covered by this certification, in accordance with subcontract agreements and the requirements of chapter 39 of Title 31, United States Code;

(3) This request for progress payments does not include any amounts which the prime contractor intends to withhold or retain from a subcontractor or supplier in accordance with the terms and conditions of the subcontract; and

(4) This certification is not to be construed as final acceptance of a subcontractor's performance.

_____

(Name)

_____

(Title)

_____

(Date)

(d) Refund of unearned amounts. If the Contractor, after making a certified request for progress payments, discovers that a portion or all of such request constitutes a payment for performance by the Contractor that fails to conform to the specifications, terms, and conditions of this contract (hereinafter referred to as the "unearned amount"), the Contractor shall--

(1) Notify the Contracting Officer of such performance deficiency; and

(2) Be obligated to pay the Government an amount (computed by the Contracting Officer in the manner provided in paragraph (j) of this clause) equal to interest on the unearned amount from the 8th day after the date of receipt of the unearned amount until--

(i) The date the Contractor notifies the Contracting Officer that the performance deficiency has been corrected; or

(ii) The date the Contractor reduces the amount of any subsequent certified request for progress payments by an amount equal to the unearned amount.

(e) Retainage. If the Contracting Officer finds that satisfactory progress was achieved during any period for which a progress payment is to be made, the Contracting Officer shall authorize payment to be made in full. However, if satisfactory progress has not been made, the Contracting Officer may retain a maximum of 10 percent of the amount of the payment until satisfactory progress is achieved. When the work is substantially complete, the Contracting Officer may retain from previously withheld funds and future progress payments that amount the Contracting Officer considers adequate for protection of the Government and shall release to the Contractor all the remaining withheld funds. Also, on completion and acceptance of each separate building, public work, or other division of the contract, for which the price is stated separately in the contract, payment shall be made for the completed work without retention of a percentage.

(f) Title, liability, and reservation of rights. All material and work covered by progress payments made shall, at the time of payment, become the sole property of the Government, but this shall not be construed as--

(1) Relieving the Contractor from the sole responsibility for all material and work upon which payments have been made or the restoration of any damaged work; or

(2) Waiving the right of the Government to require the fulfillment of all of the terms of the contract.

(g) Reimbursement for bond premiums. In making these progress payments, the Government shall, upon request, reimburse the Contractor for the amount of premiums paid for performance and payment bonds (including coinsurance and reinsurance agreements, when applicable) after the Contractor has furnished evidence of full payment to the surety. The retainage provisions in paragraph (e) of this clause shall not apply to that portion of progress payments attributable to bond premiums.

(h) Final payment. The Government shall pay the amount due the Contractor under this contract after--

(1) Completion and acceptance of all work;

(2) Presentation of a properly executed voucher; and

(3) Presentation of release of all claims against
the Government arising by virtue of this contract, other than claims, in stated amounts, that the Contractor has specifically excepted from the operation of the release. A release may also be required of the assignee if the Contractor's claim to amounts payable under this contract has been assigned under the Assignment of Claims Act of 1940 (31 U.S.C. 3727 and 41 U.S.C. 15).

(i) Limitation because of undefinitized work. Notwithstanding any provision of this contract, progress payments shall not exceed 80 percent on work accomplished on undefinitized contract actions. A "contract action" is any action resulting in a contract, as defined in FAR Subpart 2.1, including contract modifications for additional supplies or services, but not including contract modifications that are within the scope and under the terms of the contract, such as contract modifications issued pursuant to the Changes clause, or funding and other administrative changes.

(j) Interest computation on unearned amounts. In accordance with 31 U.S.C. 3903(c)(1), the amount payable under subparagraph (d)(2) of this clause shall be--

(1) Computed at the rate of average bond equivalent rates of 91-day Treasury bills auctioned at the most recent auction of such bills prior to the date the Contractor receives the unearned amount; and

(2) Deducted from the next available payment to the Contractor.

(End of clause)

52.232-17 INTEREST (JUNE 1996)

(a) Except as otherwise provided in this contract under a Price Reduction for Defective Cost or Pricing Data clause or a Cost Accounting Standards clause, all amounts that become payable by the Contractor to the Government under this contract (net of any applicable tax credit under the Internal Revenue Code (26 U.S.C. 1481)) shall bear simple interest from the date due until paid unless paid within 30 days of becoming due. The interest rate shall be the interest rate established by the Secretary of the Treasury as provided in Section 12 of the Contract Disputes Act of 1978 (Public Law 95-563), which is applicable to the period in which the amount becomes due, as provided in paragraph (b) of this clause, and then at the rate applicable for each six-month period as fixed by the Secretary until the amount is paid. reproduce, prepare derivative works, distribute copies to the public, and (b) Amounts shall be due at the earliest of the following dates:

(1) The date fixed under this contract.

(2) The date of the first written demand for payment consistent with this contract, including any demand resulting from a default termination.

(3) The date the Government transmits to the Contractor a proposed supplemental agreement to confirm completed negotiations establishing the amount of debt.

(4) If this contract provides for revision of prices, the date of written notice to the Contractor stating the amount of refund payable in connection with a pricing proposal or a negotiated pricing agreement not confirmed by contract modification.

(c) The interest charge made under this clause may be reduced under the procedures prescribed in 32.614-2 of the Federal Acquisition Regulation in effect on the date of this contract.

(End of clause)

52.232-18 AVAILABILITY OF FUNDS (APR 1984)

Funds are not presently available for this contract. The Government's obligation under this contract is contingent upon the availability of appropriated funds from which payment for contract purposes can be made. No legal liability on the part of the Government for any payment may arise until funds are made available to the Contracting Officer for this contract and until the Contractor receives notice of such availability, to be confirmed in writing by the Contracting Officer.

(End of clause)

52.232-23 ASSIGNMENT OF CLAIMS (JAN 1986)

(a) The Contractor, under the Assignment of Claims Act, as amended, 31 U.S.C. 3727, 41 U.S.C. 15 (hereafter referred to as "the Act"), may assign its rights to be paid amounts due or to become due as a result of the performance of this contract to a bank, trust company, or other financing institution, including any Federal lending agency. The assignee under such an assignment may thereafter further assign or reassign its right under the original assignment to any type of financing institution described in the preceding sentence.

(b) Any assignment or reassignment authorized under the Act and this clause shall cover all unpaid amounts payable under this contract, and shall not be made to more than one party, except that an assignment or reassignment may be made to one party as agent or trustee for two or more parties participating in the financing of this contract.

(c) The Contractor shall not furnish or disclose to any assignee under this contract any classified document (including this contract) or information related to work under this contract until the Contracting Officer authorizes such action in writing.

(End of clause)

52.232-27 PROMPT PAYMENT FOR CONSTRUCTION CONTRACTS (OCT 2003)

Notwithstanding any other payment terms in this contract, the Government will make invoice payments under the terms and conditions specified in this clause. The Government considers payment as being made on the day a check is dated or the date of an electronic funds transfer. Definitions of pertinent terms are set forth in sections 2.101,

32.001, and 32.902 of the Federal Acquisition Regulation. All days referred to in this clause are calendar days, unless otherwise specified. (However, see paragraph (a)(3) concerning payments due on Saturdays, Sundays, and legal holidays.)

(a) Invoice payments--(1) Types of invoice payments. For purposes of this clause, there are several types of invoice payments that may occur under this contract, as follows:

(i) Progress payments, if provided for elsewhere in this contract, based on Contracting Officer approval of the estimated amount and value of work or services performed, including payments for reaching milestones in any project.

(A) The due date for making such payments is 14 days after the designated billing office receives a proper payment request. If the designated billing office fails to annotate the payment request with the actual date of receipt at the time of receipt, the payment due date is the 14th day after the date of the Contractor's payment request, provided the designated billing office receives a proper payment request and there is no disagreement over quantity, quality, or Contractor compliance with contract requirements.

(B) The due date for payment of any amounts retained by the Contracting Officer in accordance with the clause at 52.232-5, Payments Under Fixed-Price Construction Contracts, is as specified in the contract or, if not specified, 30 days after approval by the Contracting Officer for release to the Contractor.

(ii) Final payments based on completion and acceptance of all work and presentation of release of all claims against the Government arising by virtue of the contract, and payments for partial deliveries that have been accepted by the Government (e.g., each separate building, public work, or other division of the contract for which the price is stated separately in the contract).

(A) The due date for making such payments is the later of the following two events:

(1) The 30th day after the designated billing office receives a proper invoice from the Contractor.

(2) The 30th day after Government acceptance of the work or services completed by the Contractor. For a final invoice when the payment amount is subject to contract settlement actions (e.g., release of claims), acceptance is deemed to occur on the effective date of the contract settlement.

(B) If the designated billing office fails to annotate the invoice with the date of actual receipt at the time of receipt, the invoice payment due date is the 30th day after the date of the Contractor's invoice, provided the designated billing office receives a proper invoice and there is no disagreement over quantity, quality, or Contractor compliance with contract requirements.

(2) Contractor's invoice. The Contractor shall prepare and submit invoices to the designated billing office specified in the contract. A proper invoice must include the items listed in paragraphs (a)(2)(i) through (a)(2)(xi) of this clause. If the invoice does not comply with these requirements, the designated billing office must return it within 7 days after receipt, with the reasons why it is not a proper invoice. When computing any interest penalty owed the Contractor, the Government will take into account if the Government notifies the Contractor of an improper invoice in an untimely manner.

(i) Name and address of the Contractor.

(ii) Invoice date and invoice number. (The Contractor should date invoices as close as possible to the date of mailing or transmission.)

(iii) Contract number or other authorization for work or services performed (including order number and contract line item number).

(iv) Description of work or services performed.

(v) Delivery and payment terms (e.g., discount for prompt payment terms).

(vi) Name and address of Contractor official to whom payment is to be sent (must be the same as that in the contract or in a proper notice of assignment).

(vii) Name (where practicable), title, phone number, and mailing address of person to notify in the event of a defective invoice.

(viii) For payments described in paragraph (a)(1)(i) of this clause, substantiation of the amounts requested and certification in accordance with the requirements of the clause at 52.232-5, Payments Under Fixed-Price Construction Contracts.

(ix) Taxpayer Identification Number (TIN). The Contractor shall include its TIN on the invoice only if required elsewhere in this contract.

(x) Electronic funds transfer (EFT) banking information.

(A) The Contractor shall include EFT banking information on the invoice only if required elsewhere in this contract.

(B) If EFT banking information is not required to be on the invoice, in order for the invoice to be a proper invoice, the Contractor shall have submitted correct EFT banking information in accordance with the applicable solicitation provision (e.g., 52.232-38, Submission of Electronic Funds Transfer Information with Offer), contract clause (e.g., 52.232-33, Payment by Electronic Funds Transfer--Central Contractor Registration, or 52.232-34, Payment by Electronic Funds Transfer--Other Than Central Contractor Registration), or applicable agency procedures.

(C) EFT banking information is not required if the Government waived the requirement to pay by EFT.

(xi) Any other information or documentation required by the contract.

(3) Interest penalty. The designated payment office will pay an interest penalty automatically, without request from the Contractor, if payment is not made by the due date and the conditions listed in paragraphs (a)(3)(i) through (a)(3)(iii) of this clause are met, if applicable. However, when the due date falls on a Saturday, Sunday, or legal holiday, the designated payment office may make payment on the following working day without incurring a late payment interest penalty.

(i) The designated billing office received a proper invoice.

(ii) The Government processed a receiving report or other Government documentation authorizing payment and there was no disagreement over quantity, quality, Contractor compliance with any contract term or condition, or requested progress payment amount.

(iii) In the case of a final invoice for any balance of funds due the Contractor for work or services performed, the amount was not subject to further contract settlement actions between the Government and the Contractor.

(4) Computing penalty amount. The Government will compute the interest penalty in accordance with the Office of Management and Budget prompt payment regulations at 5 CFR part 1315.

(i) For the sole purpose of computing an interest penalty that might be due the Contractor for payments described in paragraph (a)(1)(ii) of this clause, Government acceptance or approval is deemed to occur constructively on the 7th day after the Contractor has completed the work or services in accordance with the terms and conditions of the contract. If actual acceptance or approval occurs within the constructive acceptance or approval period, the Government will base the determination of an interest penalty on the actual date of acceptance or approval.

Constructive acceptance or constructive approval requirements do not apply if there is a disagreement over quantity, quality, or Contractor compliance with a contract provision. These requirements also do not compel Government officials to accept work or services, approve Contractor estimates, perform contract administration functions, or make payment prior to fulfilling their responsibilities.

(ii) The prompt payment regulations at 5 CFR 1315.10(c) do not require the Government to pay interest penalties if payment delays are due to disagreement between the Government and the Contractor over the payment amount or other issues involving contract compliance, or on amounts temporarily withheld or retained in accordance with the terms of the contract. The Government and the Contractor shall resolve claims involving disputes, and any interest that may be payable in accordance with the clause at FAR 52.233-1, Disputes.

(5) Discounts for prompt payment. The designated payment office will pay an interest penalty automatically, without request from the Contractor, if the Government takes a discount for prompt payment improperly. The Government will calculate the interest penalty in accordance with the prompt payment regulations at 5 CFR part 1315.

(6) Additional interest penalty. (i) The designated payment office will pay a penalty amount, calculated in accordance with the prompt payment regulations at 5 CFR part 1315 in addition to the interest penalty amount only if--

(A) The Government owes an interest penalty of $1 or more;

(B) The designated payment office does not pay the interest penalty within 10 days after the date the invoice amount is paid; and

(C) The Contractor makes a written demand to the designated payment office for additional penalty payment, in accordance with paragraph (a)(6)(ii) of this clause, postmarked not later than 40 days after the date the invoice amount is paid.

(ii)(A) The Contractor shall support written demands for additional penalty payments with the following data. The Government will not request any additional data. The Contractor shall--

(1) Specifically assert that late payment interest is due under a specific invoice, and request payment of all overdue late payment interest penalty and such additional penalty as may be required;

(2) Attach a copy of the invoice on which the unpaid late payment interest was due; and

(3) State that payment of the principal has been received, including the date of receipt.

(B) If there is no postmark or the postmark is illegible--

(1) The designated payment office that receives the demand will annotate it with the date of receipt provided the demand is received on or before the 40th day after payment was made; or

(2) If the designated payment office fails to make the required annotation, the Government will determine the demand's validity based on the date the Contractor has placed on the demand, provided such date is no later than the 40th day after payment was made.

(b) Contract financing payments. If this contract provides for contract financing, the Government will make contract financing payments in accordance with the applicable contract financing clause.

(c) Subcontract clause requirements. The Contractor shall include in each subcontract for property or services (including a material supplier) for the purpose of performing this contract the following:

(1) Prompt payment for subcontractors. A payment clause that obligates the Contractor to pay the subcontractor for satisfactory performance under its subcontract not later than 7 days from receipt of payment out of such amounts as are paid to the Contractor under this contract.

(2) Interest for subcontractors. An interest penalty clause that obligates the Contractor to pay to the subcontractor an interest penalty for each payment not made in accordance with the payment clause--

(i) For the period beginning on the day after the required payment date and ending on the date on which payment of the amount due is made; and

(ii) Computed at the rate of interest established by the Secretary of the Treasury, and published in the Federal Register, for interest payments under section 12 of the Contract Disputes Act of 1978 (41 U.S.C. 611) in effect at the time the Contractor accrues the obligation to pay an interest penalty.

(3) Subcontractor clause flowdown. A clause requiring each subcontractor to use:

(i) Include a payment clause and an interest penalty clause conforming to the standards set forth in paragraphs (c)(1) and (c)(2) of this clause in each of its subcontracts; and

(ii) Require each of its subcontractors to include such clauses in their subcontracts with each lower-tier subcontractor or supplier.

(d) Subcontract clause interpretation. The clauses required by paragraph (c) of this clause shall not be construed to impair the right of the Contractor or a subcontractor at any tier to negotiate, and to include in their subcontract, provisions that--

(1) Retainage permitted. Permit the Contractor or a subcontractor to retain (without cause) a specified percentage of each progress payment otherwise due to a subcontractor for satisfactory performance under the subcontract without incurring any obligation to pay a late payment interest penalty, in accordance with terms and conditions agreed to by the parties to the subcontract, giving such recognition as the parties deem appropriate to the ability of a subcontractor to furnish a performance bond and a payment bond;

(2) Withholding permitted. Permit the Contractor or subcontractor to make a determination that part or all of the subcontractor's request for payment may be withheld in accordance with the subcontract agreement; and

(3) Withholding requirements. Permit such withholding without incurring any obligation to pay a late payment penalty if--

(i) A notice conforming to the standards of paragraph (g) of this clause previously has been furnished to the subcontractor; and

(ii) The Contractor furnishes to the Contracting Officer a copy of any notice issued by a Contractor pursuant to paragraph (d)(3)(i) of this clause.

(e) Subcontractor withholding procedures. If a Contractor, after making a request for payment to the Government but before making a payment to a subcontractor for the subcontractor's performance covered by the payment request, discovers that all or a portion of the payment otherwise due such subcontractor is subject to withholding from the subcontractor in accordance with the subcontract agreement, then the Contractor shall--

(1) Subcontractor notice. Furnish to the subcontractor a notice conforming to the standards of paragraph (g) of this clause as soon as practicable upon ascertaining the cause giving rise to a withholding, but prior to the due date for subcontractor payment;

(2) Contracting Officer notice. Furnish to the Contracting Officer, as soon as practicable, a copy of the notice furnished to the subcontractor pursuant to paragraph (e)(1) of this clause;

(3) Subcontractor progress payment reduction. Reduce the subcontractor's progress payment by an amount not to exceed the amount specified in the notice of withholding furnished under paragraph (e)(1) of this clause;

(4) Subsequent subcontractor payment. Pay the subcontractor as soon as practicable after the correction of the identified subcontract performance deficiency, and--

(i) Make such payment within--

(A) Seven days after correction of the identified subcontract performance deficiency (unless the funds therefor must be recovered from the Government because of a reduction under paragraph
(e)(5)(i)) of this clause; or

(B) Seven days after the Contractor recovers such funds from the Government; or

(ii) Incur an obligation to pay a late payment interest penalty computed at the rate of interest established by the Secretary of the Treasury, and published in the Federal Register, for interest payments under section 12 of the Contracts Disputes Act of 1978 (41 U.S.C. 611) in effect at the time the Contractor accrues the obligation to pay an interest penalty;

(5) Notice to Contracting Officer. Notify the Contracting Officer upon--

(i) Reduction of the amount of any subsequent certified application for payment; or

(ii) Payment to the subcontractor of any withheld amounts of a progress payment, specifying--

(A) The amounts withheld under paragraph (e)(1) of this clause; and

(B) The dates that such withholding began and ended; and

(6) Interest to Government. Be obligated to pay to the Government an amount equal to interest on the withheld payments (computed in the manner provided in 31 U.S.C. 3903(c)(1)), from the 8th day after receipt of the withheld amounts from the Government until--

(i) The day the identified subcontractor performance deficiency is corrected; or

(ii) The date that any subsequent payment is reduced under paragraph (e)(5)(i) of this clause.

(f) Third-party deficiency reports--(1) Withholding from subcontractor. If a Contractor, after making payment to a first-tier subcontractor, receives from a supplier or subcontractor of the first-tier subcontractor (hereafter referred to as a “second-tier subcontractor”) a written notice in accordance with section 2 of the Act of August 24, 1935 (40 U.S.C. 270b, Miller Act), asserting a deficiency in such first-tier subcontractor's performance under the contract for which the Contractor may be ultimately liable, and the Contractor determines that all or a portion of future payments otherwise due such first-tier subcontractor is subject to withholding in accordance with the subcontract agreement, the Contractor may, without incurring an obligation to pay an interest penalty under paragraph (e)(6) of this clause--

(i) Furnish to the first-tier subcontractor a notice conforming to the standards of paragraph (g) of this clause as soon as practicable upon making such determination; and

(ii) Withhold from the first-tier subcontractor's next available progress payment or payments an amount not to exceed the amount specified in the notice of withholding furnished under paragraph (f)(1)(i) of this clause.

(2) Subsequent payment or interest charge. As soon as practicable, but not later than 7 days after receipt of satisfactory written notification that the identified subcontract performance deficiency has been corrected, the Contractor shall--

(i) Pay the amount withheld under paragraph (f)(1)(ii) of this clause to such first-tier subcontractor; or

(ii) Incur an obligation to pay a late payment interest penalty to such first-tier subcontractor computed at the rate of interest established by the Secretary of the Treasury, and published in the Federal Register, for interest payments under section 12 of the Contracts DisputesAct of 1978 (41 U.S.C. 611) in effect at the time the Contractor accrues the obligation to pay an interest penalty.

(g) Written notice of subcontractor withholding. The Contractor shall issue a written notice of any withholding to a subcontractor (with a copy furnished to the Contracting Officer), specifying--

(1) The amount to be withheld;

(2) The specific causes for the withholding under the terms of the subcontract; and

(3) The remedial actions to be taken by the subcontractor in order to receive payment of the amounts withheld.

(h) Subcontractor payment entitlement. The Contractor may not request payment from the Government of any amount withheld or retained in accordance with paragraph (d) of this clause until such time as the Contractor has determined and certified to the Contracting Officer that the subcontractor is entitled to the payment of such amount.

(i) Prime-subcontractor disputes. A dispute between the Contractor and subcontractor relating to the amount or entitlement of a subcontractor to a payment or a late payment interest penalty under a clause included in the subcontract pursuant to paragraph (c) of this clause does not constitute a dispute to which the Government is a party. The Government may not be interpleaded in any judicial or administrative proceeding involving such a dispute.

(j) Preservation of prime-subcontractor rights. Except as provided in paragraph (i) of this clause, this clause shall not limit or impair any contractual, administrative, or judicial remedies otherwise available to the Contractor or a subcontractor in the event of a dispute involving late payment or nonpayment by the Contractor or deficient subcontract performance or nonperformance by a subcontractor.

(k) Non-recourse for prime contractor interest penalty. The Contractor's obligation to pay an interest penalty to a subcontractor pursuant to the clauses included in a subcontract under paragraph (c) of this clause shall not be construed to be an obligation of the Government for such interest penalty. A cost-reimbursement claim may not include any amount for reimbursement of such interest penalty.

(l) Overpayments. If the Contractor becomes aware of a duplicate contract financing or invoice payment or that the Government has otherwise overpaid on a contract financing or invoice payment, the Contractor shall immediately notify the Contracting Officer and request instructions for disposition of the overpayment.

(End of clause)

52.232-33 PAYMENT BY ELECTRONIC FUNDS TRANSFER—CENTRAL CONTRACTOR REGISTRATION (OCT 2003)

(a) Method of payment. (1) All payments by the Government under this contract shall be made by electronic funds transfer (EFT), except as provided in paragraph (a)(2) of this clause. As used in this clause, the term “EFT” refers to the funds transfer and may also include the payment information transfer.

(2) In the event the Government is unable to release one or more payments by EFT, the Contractor agrees to either--

(i) Accept payment by check or some other mutually agreeable method of payment; or

(ii) Request the Government to extend the payment due date until such time as the Government can make payment by EFT (but see paragraph (d) of this clause).

(b) Contractor's EFT information. The Government shall make payment to the Contractor using the EFT information contained in the Central Contractor Registration (CCR) database. In the event that the EFT information changes, the Contractor shall be responsible for providing the updated information to the CCR database.

(c) Mechanisms for EFT payment. The Government may make payment by EFT through either the Automated Clearing House (ACH) network, subject to the rules of the National Automated Clearing House Association, or the Fedwire Transfer System. The rules governing Federal payments through the ACH are contained in 31 CFR part 210.

(d) Suspension of payment. If the Contractor's EFT information in the CCR database is incorrect, then the Government need not make payment to the Contractor under this contract until correct EFT information is entered into the CCR database; and any invoice or contract financing request shall be deemed not to be a proper invoice for the purpose of prompt payment under this contract. The prompt payment terms of the contract regarding notice of an improper invoice and delays in accrual of interest penalties apply.

(e) Liability for uncompleted or erroneous transfers. (1) If an uncompleted or erroneous transfer occurs because the Government used the Contractor's EFT information incorrectly, the Government remains responsible for--

(i) Making a correct payment;

(ii) Paying any prompt payment penalty due; and

(iii) Recovering any erroneously directed funds.

(2) If an uncompleted or erroneous transfer occurs because the Contractor's EFT information was incorrect, or was revised within 30 days of Government release of the EFT payment transaction instruction to the Federal Reserve System, and--

(i) If the funds are no longer under the control of the payment office, the Government is deemed to have made payment and the Contractor is responsible for recovery of any erroneously directed funds; or

(ii) If the funds remain under the control of the payment office, the Government shall not make payment, and the provisions of paragraph (d) of this clause shall apply.

(f) EFT and prompt payment. A payment shall be deemed to have been made in a timely manner in accordance with the prompt payment terms of this contract if, in the EFT payment transaction instruction released to the Federal Reserve System, the date specified for settlement of the payment is on or before the prompt payment due date, provided the specified payment date is a valid date under the rules of the Federal Reserve System.

(g) EFT and assignment of claims. If the Contractor assigns the proceeds of this contract as provided for in the assignment of claims terms of this contract, the Contractor shall require as a condition of any such assignment, that the assignee shall register separately in the CCR database and shall be paid by EFT in accordance with the terms of this clause. Notwithstanding any other requirement of this contract, payment to an ultimate recipient other than the

Contractor, or a financial institution properly recognized under an assignment of claims pursuant to subpart 32.8, is not permitted. In all respects, the requirements of this clause shall apply to the assignee as if it were the Contractor. EFT information that shows the ultimate recipient of the transfer to be other than the Contractor, in the absence of a proper assignment of claims acceptable to the Government, is incorrect EFT information within the meaning of paragraph (d) of this clause.

(h) Liability for change of EFT information by financial agent. The Government is not liable for errors resulting from changes to EFT information made by the Contractor's financial agent.

(i) Payment information. The payment or disbursing office shall forward to the Contractor available payment information that is suitable for transmission as of the date of release of the EFT instruction to the Federal Reserve System. The Government may request the Contractor to designate a desired format and method(s) for delivery of payment information from a list of formats and methods the payment office is capable of executing. However, the Government does not guarantee that any particular format or method of delivery is available at any particular payment office and retains the latitude to use the format and delivery method most convenient to the Government. If the Government makes payment by check in accordance with paragraph (a) of this clause, the Government shall mail the payment information to the remittance address contained in the CCR database.

(End of Clause)

52.233-1 DISPUTES. (JUL 2002)

(a) This contract is subject to the Contract Disputes Act of 1978, as amended (41 U.S.C. 601-613).

(b) Except as provided in the Act, all disputes arising under or relating to this contract shall be resolved under this clause.

(c) Claim, as used in this clause, means a written demand or written assertion by one of the contracting parties seeking, as a matter of right, the payment of money in a sum certain, the adjustment or interpretation of contract terms, or other relief arising under or relating to this contract. However, a written demand or written assertion by the Contractor seeking the payment of money exceeding $100,000 is not a claim under the Act until certified. A voucher, invoice, or other routine request for payment that is not in dispute when submitted is not a claim under the Act. The submission may be converted to a claim under the Act, by complying with the submission and certification requirements of this clause, if it is disputed either as to liability or amount or is not acted upon in a reasonable time.

(d)(1) A claim by the Contractor shall be made in writing and, unless otherwise stated in this contract, submitted within 6 years after accrual of the claim to the Contracting Officer for a written decision. A claim by the Government against the Contractor shall be subject to a written decision by the Contracting Officer.

(2)(i) The contractors shall provide the certification specified in subparagraph (d)(2)(iii) of this clause when submitting any claim -

(A) Exceeding $100,000; or

(B) Regardless of the amount claimed, when using -

(1) Arbitration conducted pursuant to 5 U.S.C. 575-580; or

(2) Any other alternative means of dispute resolution (ADR) technique that the agency elects to handle in accordance with the Administrative Dispute Resolution Act (ADRA).

(ii) The certification requirement does not apply to issues in controversy that have not been submitted as all or part

of a claim.

(iii) The certification shall state as follows: "I certify that the claim is made in good faith; that the supporting data are accurate and complete to the best of my knowledge and belief; that the amount requested accurately reflects the contract adjustment for which the Contractor believes the Government is liable; and that I am duly authorized to certify the claim on behalf of the Contractor.

(3) The certification may be executed by any person duly authorized to bind the Contractor with respect to the claim.

(e) For Contractor claims of $100,000 or less, the Contracting Officer must, if requested in writing by the Contractor, render a decision within 60 days of the request. For Contractor-certified claims over $100,000, the Contracting Officer must, within 60 days, decide the claim or notify the Contractor of the date by which the decision will be made.

(f) The Contracting Officer's decision shall be final unless the Contractor appeals or files a suit as provided in the Act.

(g) If the claim by the Contractor is submitted to the Contracting Officer or a claim by the Government is presented to the Contractor, the parties, by mutual consent, may agree to use alternative disput resolution (ADR). If the Contractor refuses an offer for ADR, the Contractor shall inform the Contracting Officer, in writing, of the Contractor's specific reasons for rejecting the request.

(h) The Government shall pay interest on the amount found due and unpaid from (1) the date the Contracting Officer receives the claim (certified, if required); or (2) the date that payment otherwise would be due, if that date is later, until the date of payment. With regard to claims having defective certifications, as defined in (FAR) 48 CFR 33.201, interest shall be paid from the date that the Contracting Officer initially receives the claim. Simple interest on claims shall be paid at the rate, fixed by the Secretary of the Treasury as provided in the Act, which is applicable to the period during which the Contracting Officer receives the claim and then at the rate applicable for each 6-month period as fixed by the Treasury Secretary during the pendency of the claim.

(i) The Contractor shall proceed diligently with performance of this contract, pending final resolution of any request for relief, claim, appeal, or action arising under the contract, and comply with any decision of the Contracting Officer.

(End of clause)

52.233-3 PROTEST AFTER AWARD (AUG. 1996)

(a) Upon receipt of a notice of protest (as defined in FAR 33.101) or a determination that a protest is likely (see FAR 33.102(d)), the Contracting Officer may, by written order to the Contractor, direct the Contractor to stop performance of the work called for by this contract. The order shall be specifically identified as a stop-work order issued under this clause. Upon receipt of the order, the Contractor shall immediately comply with its terms and take all reasonable steps to minimize the incurrence of costs allocable to the work covered by the order during the period of work stoppage. Upon receipt of the final decision in the protest, the Contracting Officer shall either--

(1) Cancel the stop-work order; or

(2) Terminate the work covered by the order as provided in the Default, or the Termination for Convenience of the Government, clause of this contract.

(b) If a stop-work order issued under this clause is canceled either before or after a final decision in the protest, the

Contractor shall resume work. The Contracting Officer shall make an equitable adjustment in the delivery schedule or contract price, or both, and the contract shall be modified, in writing, accordingly, if--

(1) The stop-work order results in an increase in the time required for, or in the Contractor's cost properly allocable to, the performance of any part of this contract; and

(2) The Contractor asserts its right to an adjustment within 30 days after the end of the period of work stoppage; provided, that if the Contracting Officer decides the facts justify the action, the Contracting Officer may receive and act upon a proposal at any time before final payment under this contract.

(c) If a stop-work order is not canceled and the work covered by the order is terminated for the convenience of the Government, the Contracting Officer shall allow reasonable costs resulting from the stop-work order in arriving at the termination settlement.

(d) If a stop-work order is not canceled and the work covered by the order is terminated for default, the Contracting Officer shall allow, by equitable adjustment or otherwise, reasonable costs resulting from the stop-work order.

(e) The Government's rights to terminate this contract at any time are not affected by action taken under this clause.

(f) If, as the result of the Contractor's intentional or negligent misstatement, misrepresentation, or miscertification, a protest related to this contract is sustained, and the Government pays costs, as provided in FAR 33.102(b)(2) or 33.104(h)(1), the Government may require the Contractor to reimburse the Government the amount of such costs. In addition to any other remedy available, and pursuant to the requirements of Subpart 32.6, the Government may collect this debt by offsetting the amount against any payment due the Contractor under any contract between the Contractor and the Government.

(End of clause)

52.236-2 DIFFERING SITE CONDITIONS (APR 1984)

As prescribed in 36.502, insert the following clause in solicitations and contracts when a fixed-price construction contract or a fixed-price dismantling, demolition, or removal of improvements contract is contemplated and the contract amount is expected to exceed the small purchase limitation. The Contracting Officer may insert the clause in solicitations and contracts when a fixed-price construction or a fixed-price contract for dismantling, demolition, or removal of improvements is contemplated and the contract amount is expected to be within the small purchase limitation.

(a) The Contractor shall promptly, and before the conditions are disturbed, give a written notice to the Contracting Officer of

(1) subsurface or latent physical conditions at the site which differ materially from those indicated in this contract, or

(2) unknown physical conditions at the site, of an unusual nature, which differ materially from those ordinarily encountered and generally recognized as inhering in work of the character provided for in the contract.

(b) The Contracting Officer shall investigate the site conditions promptly after receiving the notice. If the conditions do materially so differ and cause an increase or decrease in the Contractor's cost of, or the time required for, performing any part of the work under this contract, whether or not changed as a result of the conditions, an equitable adjustment shall be made under this clause and the contract modified in writing accordingly.

(c) No request by the Contractor for an equitable adjustment to the contract under this clause shall be allowed,

unless the Contractor has given the written notice required; provided, that the time prescribed in (a) above for giving written notice may be extended by the Contracting Officer.

(d) No request by the Contractor for an equitable adjustment to the contract for differing site conditions shall be allowed if made after final payment under this contract.

(End of clause)

52.236-3 SITE INVESTIGATION AND CONDITIONS AFFECTING THE WORK (APR 1984)

(a) The Contractor acknowledges that it has taken steps reasonably necessary to ascertain the nature and location of the work, and that it has investigated and satisfied itself as to the general and local conditions which can affect the work or its cost, including but not limited to

(1) conditions bearing upon transportation, disposal, handling, and storage of materials;

(2) the availability of labor, water, electric power, and roads;

(3) uncertainties of weather, river stages, tides, or similar physical conditions at the site;

(4) the conformation and conditions of the ground; and (5) the character of equipment and facilities needed preliminary to and during work performance. The Contractor also acknowledges that it has satisfied itself as to the character, quality, and quantity of surface and subsurface materials or obstacles to be encountered insofar as this information is reasonably ascertainable from an inspection of the site, including all exploratory work done by the Government, as well as from the drawings and specifications made a part of this contract. Any failure of the Contractor to take the actions described and acknowledged in this paragraph will not relieve the Contractor from responsibility for estimating properly the difficulty and cost of successfully performing the work, or for proceeding to successfully perform the work without additional expense to the Government.

(b) The Government assumes no responsibility for any conclusions or interpretations made by the Contractor based on the information made available by the Government. Nor does the Government assume responsibility for any understanding reached or representation made concerning conditions which can affect the work by any of its officers or agents before the execution of this contract, unless that understanding or representation is expressly stated in this contract.

(End of clause)

52.236-5 MATERIAL AND WORKMANSHIP (APR 1984)

(a) All equipment, material, and articles incorporated into the work covered by this contract shall be new and of the most suitable grade for the purpose intended, unless otherwise specifically provided in this contract. References in the specifications to equipment, material, articles, or patented processes by trade name, make, or catalog number, shall be regarded as establishing a standard of quality and shall not be construed as limiting competition. The Contractor may, at its option, use any equipment, material, article, or process that, in the judgment of the Contracting Officer, is equal to that named in the specifications, unless otherwise specifically provided in this contract.

(b) The Contractor shall obtain the Contracting Officer's approval of the machinery and mechanical and other equipment to be incorporated into the work. When requesting approval, the Contractor shall furnish to the Contracting Officer the name of the manufacturer, the model number, and other information concerning the

performance, capacity, nature, and rating of the machinery and mechanical and other equipment. When required by this contract or by the Contracting Officer, the Contractor shall also obtain the Contracting Officer's approval of the material or articles which the Contractor contemplates incorporating into the work. When requesting approval, the Contractor shall provide full information concerning the material or articles. When directed to do so, the Contractor shall submit samples for approval at the Contractor's expense, with all shipping charges prepaid. Machinery, equipment, material, and articles that do not have the required approval shall be installed or used at the risk of subsequent rejection.

(c) All work under this contract shall be performed in a skillful and workmanlike manner. The Contracting Officer may require, in writing, that the Contractor remove from the work any employee the Contracting Officer deems incompetent, careless, or otherwise objectionable.

(End of clause)

52.236-6 SUPERINTENDENCE BY THE CONTRACTOR (APR 1984)

At all times during performance of this contract and until the work is completed and accepted, the Contractor shall directly superintend the work or assign and have on the worksite a competent superintendent who is satisfactory to the Contracting Officer and has authority to act for the Contractor.

(End of clause)

52.236-7 PERMITS AND RESPONSIBILITIES (NOV 1991)

The Contractor shall, without additional expense to the Government, be responsible for obtaining any necessary licenses and permits, and for complying with any Federal, State, and municipal laws, codes, and regulations applicable to the performance of the work. The Contractor shall also be responsible for all damages to persons or property that occur as a result of the Contractor's fault or negligence. The Contractor shall also be responsible for all materials delivered and work performed until completion and acceptance of the entire work, except for any completed unit of work which may have been accepted under the contract.

(End of clause)

52.236-8 OTHER CONTRACTS (APR 1984)

The Government may undertake or award other contracts for additional work at or near the site of the work under this contract. The Contractor shall fully cooperate with the other contractors and with Government employees and shall carefully adapt scheduling and performing the work under this contract to accommodate the additional work, heeding any direction that may be provided by the Contracting Officer. The Contractor shall not commit or permit any act that will interfere with the performance of work by any other contractor or by Government employees.

(End of clause)

52.236-9 PROTECTION OF EXISTING VEGETATION, STRUCTURES, EQUIPMENT, UTILITIES, AND IMPROVEMENTS (APR 1984)

(a) The Contractor shall preserve and protect all structures, equipment, and vegetation (such as trees, shrubs, and grass) on or adjacent to the work site, which are not to be removed and which do not unreasonably interfere with the work required under this contract. The Contractor shall only remove trees when specifically authorized to do so, and shall avoid damaging vegetation that will remain in place. If any limbs or branches of trees are broken during contract performance, or by the careless operation of equipment, or by workmen, the Contractor shall trim those limbs or branches with a clean cut and paint the cut with a tree-pruning compound as directed by the Contracting Officer.

(b) The Contractor shall protect from damage all existing improvements and utilities

(1) at or near the work site, and

(2) on adjacent property of a third party, the locations of which are made known to or should be known by the Contractor. The Contractor shall repair any damage to those facilities, including those that are the property of a third party, resulting from failure to comply with the requirements of this contract or failure to exercise reasonable care in performing the work. If the Contractor fails or refuses to repair the damage promptly, the Contracting Officer may have the necessary work performed and charge the cost to the Contractor.

(End of clause)

52.236-10 OPERATIONS AND STORAGE AREAS (APR 1984)

(a) The Contractor shall confine all operations (including storage of materials) on Government premises to areas authorized or approved by the Contracting Officer. The Contractor shall hold and save the Government, its officers and agents, free and harmless from liability of any nature occasioned by the Contractor's performance.

(b) Temporary buildings (e.g., storage sheds, shops, offices) and utilities may be erected by the Contractor only with the approval of the Contracting Officer and shall be built with labor and materials furnished by the Contractor without expense to the Government. The temporary buildings and utilities shall remain the property of the Contractor and shall be removed by the Contractor at its expense upon completion of the work. With the written consent of the Contracting Officer, the buildings and utilities may be abandoned and need not be removed.

(c) The Contractor shall, under regulations prescribed by the Contracting Officer, use only established roadways, or use temporary roadways constructed by the Contractor when and as authorized by the Contracting Officer. When materials are transported in prosecuting the work, vehicles shall not be loaded beyond the loading capacity recommended by the manufacturer of the vehicle or prescribed by any Federal, State, or local law or regulation. When it is necessary to cross curbs or sidewalks, the Contractor shall protect them from damage. The Contractor shall repair or pay for the repair of any damaged curbs, sidewalks, or roads.

(End of clause)

52.236-11 USE AND POSSESSION PRIOR TO COMPLETION (APR 1984)

(a) The Government shall have the right to take possession of or use any completed or partially completed part of the work. Before taking possession of or using any work, the Contracting Officer shall furnish the Contractor a list of items of work remaining to be performed or corrected on those portions of the work that the Government intends to take possession of or use. However, failure of the Contracting Officer to list any item of work shall not relieve the Contractor of responsibility for complying with the terms of the contract. The Government's possession or use shall not be deemed an acceptance of any work under the contract.

(b) While the Government has such possession or use, the Contractor shall be relieved of the responsibility for the loss of or damage to the work resulting from the Government's possession or use, notwithstanding the terms of the clause in this contract entitled "Permits and Responsibilities." If prior possession or use by the Government delays the progress of the work or causes additional expense to the Contractor, an equitable adjustment shall be made in the contract price or the time of completion, and the contract shall be modified in writing accordingly.

(End of clause)

52.236-12 CLEANING UP (APR 1984)

The Contractor shall at all times keep the work area, including storage areas, free from accumulations of waste materials. Before completing the work, the Contractor shall remove from the work and premises any rubbish, tools, scaffolding, equipment, and materials that are not the property of the Government. Upon completing the work, the Contractor shall leave the work area in a clean, neat, and orderly condition satisfactory to the Contracting Officer.

(End of clause)

52.236-13 ACCIDENT PREVENTION (NOV 1991) – ALTERNATE I (NOV 1991)

(a) The Contractor shall provide and maintain work environments and procedures which will

(1) safeguard the public and Government personnel, property, materials, supplies, and equipment exposed to Contractor operations and activities;

(2) avoid interruptions of Government operations and delays in project completion dates; and

(3) control costs in the performance of this contract.

(b) For these purposes on contracts for construction or dismantling, demolition, or removal of improvements, the Contractor shall-

(1) Provide appropriate safety barricades, signs, and signal lights;

(2) Comply with the standards issued by the Secretary of Labor at 29 CFR Part 1926 and 29 CFR Part 1910; and

(3) Ensure that any additional measures the Contracting Officer determines to be reasonably necessary for the purposes are taken.

55 If this contract is for construction or dismantling, demolition or removal of improvements with any Department of Defense agency or component, the Contractor shall comply with all pertinent provisions of the latest version of U.S. Army Corps of Engineers Safety and Health Requirements Manual, EM 385-1-1, in effect on the date of the solicitation.

(c) Whenever the Contracting Officer becomes aware of any noncompliance with these requirements or any condition which poses a serious or imminent danger to the health or safety of the public or Government personnel, the Contracting Officer shall notify the Contractor orally, with written confirmation, and request immediate initiation of corrective action. This notice, when delivered to the Contractor or the Contractor's representative at the work site, shall be deemed sufficient notice of the noncompliance and that corrective action is required. After receiving the notice, the Contractor shall immediately take corrective action. If the Contractor fails or refuses to promptly take corrective action, the Contracting Officer may issue an order stopping all or part of the work until

satisfactory corrective action has been taken. The Contractor shall not be entitled to any equitable adjustment of the contract price or extension of the performance schedule on any stop work order issued under this clause.

(e) The Contractor shall insert this clause, including this paragraph (e), with appropriate changes in the designation of the parties, in subcontracts.

(f) Before commencing the work, the Contractor shall-

(1) Submit a written proposed plan for implementing this clause. The plan shall include an analysis of the significant hazards to life, limb, and property inherent in contract work performance and a plan for controlling these hazards; and

(2) Meet with representatives of the Contracting Officer to discuss and develop a mutual understanding relative to administration of the overall safety program.

(End of clause)

52.236-15 SCHEDULES FOR CONSTRUCTION CONTRACTS (APR 1984)

(a) The Contractor shall, within five days after the work commences on the contract or another period of time determined by the Contracting Officer, prepare and submit to the Contracting Officer for approval three copies of a practicable schedule showing the order in which the Contractor proposes to perform the work, and the dates on which the Contractor contemplates starting and completing the several salient features of the work (including acquiring materials, plant, and equipment). The schedule shall be in the form of a progress chart of suitable scale to indicate appropriately the percentage of work scheduled for completion by any given date during the period. If the Contractor fails to submit a schedule within the time prescribed, the Contracting Officer may withhold approval of progress payments until the Contractor submits the required schedule.

(b) The Contractor shall enter the actual progress on the chart as directed by the Contracting Officer, and upon doing so shall immediately deliver three copies of the annotated schedule to the Contracting Officer. If, in the opinion of the Contracting Officer, the Contractor falls behind the approved schedule, the Contractor shall take steps necessary to improve its progress, including those that may be required by the Contracting Officer, without additional cost to the Government. In this circumstance, the Contracting Officer may require the Contractor to increase the number of shifts, overtime operations, days of work, and/or the amount of construction plant, and to submit for approval any supplementary schedule or schedules in chart form as the Contracting Officer deems necessary to demonstrate how the approved rate of progress will be regained.

(c) Failure of the Contractor to comply with the requirements of the Contracting Officer under this clause shall be grounds for a determination by the Contracting Officer that the Contractor is not prosecuting the work with sufficient diligence to ensure completion within the time specified in the contract. Upon making this determination, the Contracting Officer may terminate the Contractor's right to proceed with the work, or any separable part of it, in accordance with the default terms of this contract.

(End of clause)

52.236-17 LAYOUT OF WORK (APR 1984)

The Contractor shall lay out its work from Government established base lines and bench marks indicated on the drawings, and shall be responsible for all measurements in connection with the layout. The Contractor shall furnish, at its own expense, all stakes, templates, platforms, equipment, tools, materials, and labor required to lay out any

part of the work. The Contractor shall be responsible for executing the work to the lines and grades that may be established or indicated by the Contracting Officer. The Contractor shall also be responsible for maintaining and preserving all stakes and other marks established by the Contracting Officer until authorized to remove them. If such marks are destroyed by the Contractor or through its negligence before their removal is authorized, the Contracting Officer may replace them and deduct the expense of the replacement from any amounts due or to become due to the Contractor.

(End of clause)

52.236-21 SPECIFICATIONS AND DRAWINGS FOR CONSTRUCTION (FEB 1997)

(a) The Contractor shall keep on the work site a copy of the drawings and specifications and shall at all times give the Contracting Officer access thereto. Anything mentioned in the specifications and not shown on the drawings, or shown on the drawings and not mentioned in the specifications, shall be of like effect as if shown or mentioned in both. In case of difference between drawings and specifications, the specifications shall govern. In case of discrepancy in the figures, in the drawings, or in the specifications, the matter shall be promptly submitted to the Contracting Officer, who shall promptly make a determination in writing. Any adjustment by the Contractor without such a determination shall be at its own risk and expense. The Contracting Officer shall furnish from time to time such detailed drawings and other information as considered necessary, unless otherwise provided.

(b) Wherever in the specifications or upon the drawings the words "directed", "required", "ordered", "designated", "prescribed", or words of like import are used, it shall be understood that the "direction", "requirement", "order", "designation", or "prescription", of the Contracting Officer is intended and similarly the words "approved", "acceptable", "satisfactory", or words of like import shall mean "approved by," or "acceptable to", or "satisfactory to" the Contracting Officer, unless otherwise expressly stated.

(c) Where "as shown," as indicated", "as detailed", or words of similar import are used, it shall be understood that the reference is made to the drawings accompanying this contract unless stated otherwise. The word "provided" as used herein shall be understood to mean "provide complete in place," that is "furnished and installed".

(d) Shop drawings means drawings, submitted to the Government by the Contractor, subcontractor, or any lower tier subcontractor pursuant to a construction contract, showing in detail (1) the proposed fabrication and assembly of structural elements, and (2) the installation (i.e., fit, and attachment details) of materials or equipment. It includes drawings, diagrams, layouts, schematics, descriptive literature, illustrations, schedules, performance and test data, and similar materials furnished by the contractor to explain in detail specific portions of the work required by the contract. The Government may duplicate, use, and disclose in any manner and for any purpose shop drawings delivered under this contract.

(e) If this contract requires shop drawings, the Contractor shall coordinate all such drawings, and review them for accuracy, completeness, and compliance with contract requirements and shall indicate its approval thereon as evidence of such coordination and review. Shop drawings submitted to the Contracting Officer without evidence of the Contractor's approval may be returned for resubmission. The Contracting Officer will indicate an approval or disapproval of the shop drawings and if not approved as submitted shall indicate the Government's reasons therefor. Any work done before such approval shall be at the Contractor's risk. Approval by the Contracting Officer shall not relieve the Contractor from responsibility for any errors or omissions in such drawings, nor from responsibility for complying with the requirements of this contract, except with respect to variations described and approved in accordance with (f) below.

(f) If shop drawings show variations from the contract requirements, the Contractor shall describe such variations in writing, separate from the drawings, at the time of submission. If the Contracting Officer approves any such variation, the Contracting Officer shall issue an appropriate contract modification, except that, if the variation is minor or does not involve a change in price or in time of performance, a modification need not be issued.

(g) The Contractor shall submit to the Contracting Officer for approval four copies (unless otherwise indicated) of all shop drawings as called for under the various headings of these specifications. Three sets (unless otherwise indicated) of all shop drawings, will be retained by the Contracting Officer and one set will be returned to the Contractor.

(End of clause)

52.236-26 PRECONSTRUCTION CONFERENCE (FEB 1995)

If the Contracting Officer decides to conduct a preconstruction conference, the successful offeror will be notified and will be required to attend. The Contracting Officer's notification will include specific details regarding the date, time, and location of the conference, any need for attendance by subcontractors, and information regarding the items to be discussed.

(End of clause)

52.239-4001 Year 2000 Compliance

The contractor shall ensure products provided under this contract, to include hardware, software, firmware, and middleware, whether acting alone or combined as a system, are Year 2000 compliant as defined as follows: Year 2000 compliant means with respect to information technology, that the information technology accurately processes date/time data (including, but not limited to, calculating, comparing, and sequencing) from, into, and between the twentieth and twenty-first centuries, and the years 1999 and 2000 and leap year calculations, to the extent that other information, used in combination with the information technology being acquired, properly exchanges date/time data with it.

52.239-4005 Year 2000 Compliance - Construction Contracts

a. In accordance with FAR 39.106, the contractor shall ensure that with respect to any design, construction, goods, or services under this contract as well as any subsequent task/delivery orders issued under this contract (if applicable), all information technology contained therein shall be Year 2000 compliant. Specifically: The contractor shall:

(1) Perform, maintain, and provide an inventory of all major components to include structures, equipment, items, parts, and furnishings under this contract and each task/delivery order which may be affected by the Y2K compliance requirement.

(2) Indicate whether each component is currently Year 2000 compliant or requires an upgrade for compliance prior to government acceptance.

(End of Clause)

52.239-4006 SECURITY CONTRACT LANGUAGE FOR ALL CORPS OF ENGINEERS' UNCLASSIFIED CONTRACTS (PIL 2003-06, 19 FEB 03)

All Contractor employees (U.S. citizens and Non- U.S. citizens) working under this contract (to include grants, cooperative agreements and task orders) who require access to Automated Information Systems (AIS), (stand alone computers, network computers/systems, e-mail) shall, at a minimum, be designated into an ADP-III position (non-sensitive) in accordance with DoD 5220-22-R, Industrial Security Regulation. The investigative requirements for an ADP-III position are a favorable National Agency Check (NAC), SF-85P, Public Trust Position. The contractor shall have each applicable employee complete a SF-85P and submit to the USACE, Savannah District Security Officer, ATTN: CESAS-SL, 100 West Oglethorpe Avenue, Savannah, GA 31401 within three (3) working days after award of any contract or task order, and shall be submitted prior to the individual being permitted access to an AIS. Contractors who have a commercial or government entity (CAGE) Code and Facility Security Clearance through the Defense Security Service shall process the NACs and forward visit requests/results of NAC to the Savannah District Security Officer (address above). For those contractors who do not have a CAGE Code or Facility Security Clearance, the Savannah District Security Office will process the investigation in coordination with the Contractor and contract employees.

In accordance with Engineering Regulation, ER 380-1-18, Section 4, foreign nationals who work on Corps of Engineers' contracts or task orders shall be approved by the HQUSACE Foreign Disclosure Officer or higher before beginning work on the contract/task order. This regulation includes subcontractor employees. (NOTE: exceptions to the above requirement include foreign nationals who perform janitorial and/or ground maintenance services.) The contractor shall submit to the Division/District Contract Office, the names of all foreign nationals proposed for performance under this contract/task order, along with documentation to verify that he/she was legally admitted into the United States and has authority to work and/or go to school in the US. Such documentation may include a US passport, Certificate of US citizenship (INS Form N-560 or N-561), Certificate of Naturalization (INS Form N-550 or N-570), foreign passport with I-551 stamp or attached INS Form I-94 indicating employment authorization, Alien Registration Receipt Card with photograph (INS Form I-151 or I-551), Temporary Resident Card (INS Form I-688), Employment Authorization Card (INS Form I-688A), Reentry Permit (INS Form I-327), Refugee Travel Document (INS Form I-571), Employment Authorization Document issued by the INS which contains a photograph (INS Form I-688B).

Classified contracts require the issuance of a DD Form 254 (Department of Defense Contract Security Classification Specification).

52.242-13 BANKRUPTCY (JUL 1995)

In the event the Contractor enters into proceedings relating to bankruptcy, whether voluntary or involuntary, the Contractor agrees to furnish, by certified mail or electronic commerce method authorized by the contract, written notification of the bankruptcy to the Contracting Officer responsible for administering the contract. This notification shall be furnished within five days of the initiation of the proceedings relating to bankruptcy filing. This notification shall include the date on which the bankruptcy petition was filed, the identity of the court in which the bankruptcy petition was filed, and a listing of Government contract numbers and contracting offices for all Government contracts against which final payment has not been made. This obligation remains in effect until final payment under this contract.

(End of clause)

52.242-14 SUSPENSION OF WORK (APR 1984)

(a) The Contracting Officer may order the Contractor, in writing, to suspend, delay, or interrupt all or any part of the work of this contract for the period of time that the Contracting Officer determines appropriate for the convenience of the Government.

(b) If the performance of all or any part of the work is, for an unreasonable period of time, suspended, delayed, or interrupted (1) by an act of the Contracting Officer in the administration of this contract, or (2) by the Contracting Officer's failure to act within the time specified in this contract (or within a reasonable time if not specified), an adjustment shall be made for any increase in the cost of performance of this contract (excluding profit) necessarily caused by the unreasonable suspension, delay, or interruption, and the contract modified in writing accordingly. However, no adjustment shall be made under this clause for any suspension, delay, or interruption to the extent that performance would have been so suspended, delayed, or interrupted by any other cause, including the fault or negligence of the Contractor, or for which an equitable adjustment is provided for or excluded under any other term or condition of this contract. (c) A claim under this clause shall not be allowed (1) for any costs incurred more than 20 days before the Contractor shall have notified the Contracting Officer in writing of the act or failure to act involved (but this requirement shall not apply as to a claim resulting from a suspension order), and (2) unless the claim, in an amount stated, is asserted in writing as soon as practicable after the termination of the suspension, delay, or interruption, but not later than the date of final payment under the contract.

(End of clause)

52.243-4 CHANGES (AUG 1987)

(a) The Contracting Officer may, at any time, without notice to the sureties, if any, by written order designated or indicated to be a change order, make changes in the work within the general scope of the contract, including changes--

(1) In the specifications (including drawings and designs);

(2) In the method or manner of performance of the work;

(3) In the Government-furnished facilities, equipment, materials, services, or site; or

(4) Directing acceleration in the performance of the work.

(b) Any other written or oral order (which, as used in this paragraph (b), includes direction, instruction, interpretation, or determination) from the Contracting Officer that causes a change shall be treated as a change order under this clause; provided, that the Contractor gives the Contracting Officer written notice stating

(1) the date, circumstances, and source of the order and

(2) that the Contractor regards the order as a change order.

(c) Except as provided in this clause, no order, statement, or conduct of the Contracting Officer shall be treated as a change under this clause or entitle the Contractor to an equitable adjustment.

(d) If any change under this clause causes an increase or decrease in the Contractor's cost of, or the time required for, the performance of any part of the work under this contract, whether or not changed by any such order, the Contracting Officer shall make an equitable adjustment and modify the contract in writing. However, except for an adjustment based on defective specifications, no adjustment for any change under paragraph (b) of this clause shall be made for any costs incurred more than 20 days before the Contractor gives written notice as required. In the case of defective specifications for which the Government is responsible, the equitable adjustment shall include any increased cost reasonably incurred by the Contractor in attempting to comply with the defective specifications.

(e) The Contractor must assert its right to an adjustment under this clause within 30 days after

(1) receipt of a written change order under paragraph (a) of this clause or (2) the furnishing of a written notice under paragraph (b) of this clause, by submitting to the Contracting Officer a written statement describing the general nature and amount of the proposal, unless this period is extended by the Government. The statement of proposal for adjustment may be included in the notice under paragraph (b) above.

(f) No proposal by the Contractor for an equitable adjustment shall be allowed if asserted after final payment under this contract.

(End of clause)

52.244-5 COMPETITION IN SUBCONTRACTING (DEC 1996)

(a) The Contractor shall select subcontractors (including suppliers) on a competitive basis to the maximum practical extent consistent with the objectives and requirements of the contract.

(b) If the Contractor is an approved mentor under the Department of Defense Pilot Mentor-Protege Program (Pub. L. 101–510, section 831 as amended), the Contractor may award subcontracts under this contract on a noncompetitive basis to its proteges.

(End of clause)

52.248-3 VALUE ENGINEERING--CONSTRUCTION (FEB 2000)

(a) General. The Contractor is encouraged to develop, prepare, and submit value engineering change proposals (VECP's) voluntarily. The Contractor shall share in any instant contract savings realized from accepted VECP's, in accordance with paragraph (f) below.

(b) Definitions. "Collateral costs," as used in this clause, means agency costs of operation, maintenance, logistic support, or Government-furnished property.

"Collateral savings," as used in this clause, means those measurable net reductions resulting from a VECP in the agency's overall projected collateral costs, exclusive of acquisition savings, whether or not the acquisition cost changes.

"Contractor's development and implementation costs," as used in this clause, means those costs the Contractor incurs on a VECP specifically in developing, testing, preparing, and submitting the VECP, as well as those costs the Contractor incurs to make the contractual changes required by Government acceptance of a VECP.

"Government costs," as used in this clause, means those agency costs that result directly from developing and implementing the VECP, such as any net increases in the cost of testing, operations, maintenance, and logistic support. The term does not include the normal administrative costs of processing the VECP.

"Instant contract savings," as used in this clause, means the estimated reduction in Contractor cost of performance resulting from acceptance of the VECP, minus allowable Contractor's development and implementation costs, including subcontractors' development and implementation costs (see paragraph (h) below).

"Value engineering change proposal (VECP)" means a proposal that--

(1) Requires a change to this, the instant contract, to implement; and

(2) Results in reducing the contract price or estimated cost without impairing essential functions or characteristics; provided, that it does not involve a change--

(i) In deliverable end item quantities only; or

(ii) To the contract type only.

(c) VECP preparation. As a minimum, the Contractor shall include in each VECP the information described in subparagraphs (1) through (7) below. If the proposed change is affected by contractually required configuration management or similar procedures, the instructions in those procedures relating to format, identification, and priority assignment shall govern VECP preparation. The VECP shall include the following:

(1) A description of the difference between the existing contract requirement and that proposed, the comparative advantages and disadvantages of each, a justification when an item's function or characteristics are being altered, and the effect of the change on the end item's performance.

(2) A list and analysis of the contract requirements that must be changed if the VECP is accepted, including any suggested specification revisions.

(3) A separate, detailed cost estimate for

(i) the affected portions of the existing contract requirement and

(ii) the VECP. The cost reduction associated with the VECP shall take into account the Contractor's allowable development and implementation costs, including any amount attributable to subcontracts under paragraph (h) below.

(4) A description and estimate of costs the Government may incur in implementing the VECP, such as test and evaluation and operating and support costs.

(5) A prediction of any effects the proposed change would have on collateral costs to the agency.

(6) A statement of the time by which a contract modification accepting the VECP must be issued in order to achieve the maximum cost reduction, noting any effect on the contract completion time or delivery schedule.

(7) Identification of any previous submissions of the VECP, including the dates submitted, the agencies and contract numbers involved, and previous Government actions, if known.

(d) Submission. The Contractor shall submit VECP's to the Resident Engineer at the worksite, with a copy to the Contracting Officer.

(e) Government action.

(1) The Contracting Officer will notify the Contractor of the status of the VECP within 45 calendar days after the contracting office receives it. If additional time is required, the Contracting Officer will notify the Contractor within the 45-day period and provide the reason for the delay and the expected date of the decision. The Government will process VECP's expeditiously; however, it shall not be liable for any delay in acting upon a VECP.

If the VECP is not accepted, the Contracting Officer will notify the Contractor in writing, explaining the reasons for rejection. The Contractor may withdraw any VECP, in whole or in part, at any time before it is accepted by the

Government. The Contracting Officer may require that the Contractor provide written notification before undertaking significant expenditures for VECP effort.

Any VECP may be accepted, in whole or in part, by the Contracting Officer's award of a modification to this contract citing this clause. The Contracting Officer may accept the VECP, even though an agreement on price reduction has not been reached, by issuing the Contractor a notice to proceed with the change. Until a notice to proceed is issued or a contract modification applies a VECP to this contract, the Contractor shall perform in accordance with the existing contract. The decision to accept or reject all or part of any VECP is a unilateral decision made solely at the discretion of the Contracting Officer.

(f) Sharing.

(1) Rates. The Government's share of savings is determined by subtracting Government costs from instant contract savings and multiplying the result by

(i) 45 percent for fixed-price contracts or

(ii) 75 percent for cost-reimbursement contracts.

(2) Payment. Payment of any share due the Contractor for use of a VECP on this contract shall be authorized by a modification to this contract to--

(i) Accept the VECP;

(ii) Reduce the contract price or estimated cost by the amount of instant contract savings; and

(iii) Provide the Contractor's share of savings by adding the amount calculated to the contract price or fee.

(g) Collateral savings. If a VECP is accepted, the Contracting Officer will increase the instant contract amount by 20 percent of any projected collateral savings determined to be realized in a typical year of use after subtracting any Government costs not previously offset. However, the Contractor's share of collateral savings will not exceed the contract's firm-fixed-price or estimated cost, at the time the VECP is accepted, or $100,000, whichever is greater. The Contracting Officer is the sole determiner of the amount of collateral savings.

(h) Subcontracts. The Contractor shall include an appropriate value engineering clause in any subcontract of $50,000 or more and may include one in subcontracts of lesser value. In computing any adjustment in this contract's price under paragraph (f) above, the Contractor's allowable development and implementation costs shall include any subcontractor's allowable development and implementation costs clearly resulting from a VECP accepted by the Government under this contract, but shall exclude any value engineering incentive payments to a subcontractor. The Contractor may choose any arrangement for subcontractor value engineering incentive payments; provided, that these payments shall not reduce the Government's share of the savings resulting from the VECP.

(i) Data. The Contractor may restrict the Government's right to use any part of a VECP or the supporting data by marking the following legend on the affected parts:

"These data, furnished under the Value Engineering-- Construction clause of contract . . . . . , shall not be disclosed outside the Government or duplicated, used, or disclosed, in whole or in part, for any purpose other than to evaluate a value engineering change proposal submitted under the clause. This restriction does not limit the Government's right to use information contained in these data if it has been obtained or is otherwise available from the Contractor or from another source without limitations." If a VECP is accepted, the Contractor hereby grants the Government unlimited rights in the VECP and supporting data, except that, with respect to data qualifying and submitted as limited rights technical data, the Government shall have the rights specified in the contract

modification implementing the VECP and shall appropriately mark the data. (The terms "unlimited rights" and "limited rights" are defined in Part 27 of the Federal Acquisition Regulation.)

(End of clause)

52.249-2 TERMINATION FOR CONVENIENCE OF THE GOVERNMENT (FIXED-PRICE) (MAY 2004) - ALTERNATE I (SEP 1996)

(a) The Government may terminate performance of work under this contract in whole or, from time to time, in part if the Contracting Officer determines that a termination is in the Government's interest. The Contracting Officer shall terminate by delivering to the Contractor a Notice of Termination specifying the extent of termination and the effective date.

(b) After receipt of a Notice of Termination, and except as directed by the Contracting Officer, the Contractor shall immediately proceed with the following obligations, regardless of any delay in determining or adjusting any amounts due under this clause:

(1) Stop work as specified in the notice.

(2) Place no further subcontracts or orders (referred to as subcontracts in this clause) for materials, services, or facilities, except as necessary to complete the continued portion of the contract.

(3) Terminate all subcontracts to the extent they relate to the work terminated.

(4) Assign to the Government, as directed by the Contracting Officer, all right, title, and interest of the Contractor under the subcontracts terminated, in which case the Government shall have the right to settle or to pay any termination settlement proposal arising out of those terminations.

(5) With approval or ratification to the extent required by the Contracting Officer, settle all outstanding liabilities and termination settlement proposals arising from the termination of subcontracts; the approval or ratification will be final for purposes of this clause.

(6) As directed by the Contracting Officer, transfer title and deliver to the Government (i) the fabricated or unfabricated parts, work in process, completed work, supplies, and other material produced or acquired for the work terminated, and (ii) the completed or partially completed plans, drawings, information, and other property that, if the contract had been completed, would be required to be furnished to the Government.

(7) Complete performance of the work not terminated.

(8) Take any action that may be necessary, or that the Contracting Officer may direct, for the protection and preservation of the property related to this contract that is in the possession of the Contractor and in which the Government has or may acquire an interest.

(9) Use its best efforts to sell, as directed or authorized by the Contracting Officer, any property of the types referred to in subparagraph (b)(6) of this clause; provided, however, that the Contractor (i) is not required to extend credit to any purchaser and (ii) may acquire the property under the conditions prescribed by, and at prices approved by, the Contracting Officer. The proceeds of any transfer or disposition will be applied to reduce any payments to be made by the Government under this contract, credited to the price or cost of the work, or paid in any other manner directed by the Contracting Officer.

(c) The Contractor shall submit complete termination inventory schedules no later than 120 days from the effective date of termination, unless extended in writing by the Contracting Officer upon written request of the Contractor within this 120-day period.

(d) After expiration of the plant clearance period as defined in Subpart 49.001 of the Federal Acquisition Regulation, the Contractor may submit to the Contracting Officer a list, certified as to quantity and quality, of termination inventory not previously disposed of, excluding items authorized for disposition by the Contracting Officer. The Contractor may request the Government to remove those items or enter into an agreement for their storage. Within 15 days, the Government will accept title to those items and remove them or enter into a storage agreement. The Contracting Officer may verify the list upon removal of the items, or if stored, within 45 days from submission of the list, and shall correct the list, as necessary, before final settlement.

(e) After termination, the Contractor shall submit a final termination settlement proposal to the Contracting Officer in the form and with the certification prescribed by the Contracting Officer. The Contractor shall submit the proposal promptly, but no later than 1 year from the effective date of termination, unless extended in writing by the Contracting Officer upon written request of the Contractor within this 1-year period. However, if the Contracting Officer determines that the facts justify it, a termination settlement proposal may be received and acted on after 1 year or any extension. If the Contractor fails to submit the proposal within the time allowed, the Contracting Officer may determine, on the basis of information available, the amount, if any, due the Contractor because of the termination and shall pay the amount determined.

(f) Subject to paragraph (e) of this clause, the Contractor and the Contracting Officer may agree upon the whole or any part of the amount to be paid or remaining to be paid because of the termination. The amount may include a reasonable allowance for profit on work done. However, the agreed amount, whether under this paragraph (g) or paragraph (g) of this clause, exclusive of costs shown in subparagraph (g)(3) of this clause, may not exceed the total contract price as reduced by (1) the amount of payments previously made and (2) the contract price of work not terminated. The contract shall be modified, and the Contractor paid the agreed amount. Paragraph (g) of this clause shall not limit, restrict, or affect the amount that may be agreed upon to be paid under this paragraph.

(g) If the Contractor and Contracting Officer fail to agree on the whole amount to be paid the Contractor because of the termination of work, the Contracting Officer shall pay the Contractor the amounts determined as follows, but without duplication of any amounts agreed upon under paragraph (f) of this clause:

(1) For contract work performed before the effective date of termination, the total (without duplication of any items) of--

(i) The cost of this work;

(ii) The cost of settling and paying termination settlement proposals under terminated subcontracts that are properly chargeable to the terminated portion of the contract if not included in subdivision (g)(1)(i) of this clause; and

(iii) A sum, as profit on subdivision (g)(1)(i) of this clause, determined by the Contracting Officer under 49.202 of the Federal Acquisition Regulation, in effect on the date of this contract, to be fair and reasonable; however, if it appears that the Contractor would have sustained a loss on the entire contract had it been completed, the Contracting Officer shall allow no profit under this subdivision (iii) and shall reduce the settlement to reflect the indicated rate of loss.

(2) The reasonable costs of settlement of the work terminated, including--

(i) Accounting, legal, clerical, and other expenses reasonably necessary for the preparation of termination settlement proposals and supporting data;

(ii) The termination and settlement of subcontracts (excluding the amounts of such settlements); and

(iii) Storage, transportation, and other costs incurred, reasonably necessary for the preservation, protection, or disposition of the termination inventory.

(h) Except for normal spoilage, and except to the extent that the Government expressly assumed the risk of loss, the Contracting Officer shall exclude from the amounts payable to the Contractor under paragraph (g) of this clause, the fair value, as determined by the Contracting Officer, of property that is destroyed, lost, stolen, or damaged so as to become undeliverable to the Government or to a buyer.

(i) The cost principles and procedures of Part 31 of the Federal Acquisition Regulation, in effect on the date of this contract, shall govern all costs claimed, agreed to, or determined under this clause.

(j) The Contractor shall have the right of appeal, under the Disputes clause, from any determination made by the Contracting Officer under paragraph (e), (g), or (l) of this clause, except that if the Contractor failed to submit the termination settlement proposal or request for equitable adjustment within the time provided in paragraph (e) or (l), respectively, and failed to request a time extension, there is no right of appeal.

(k) In arriving at the amount due the Contractor under this clause, there shall be deducted--

(1) All unliquidated advance or other payments to the Contractor under the terminated portion of this contract;

(2) Any claim which the Government has against the Contractor under this contract; and

(3) The agreed price for, or the proceeds of sale of, materials, supplies, or other things acquired by the Contractor or sold under the provisions of this clause and not recovered by or credited to the Government.

(l) If the termination is partial, the Contractor may file a proposal with the Contracting Officer for an equitable adjustment of the price(s) of the continued portion of the contract. The Contracting Officer shall make any equitable adjustment agreed upon. Any proposal by the Contractor for an equitable adjustment under this clause shall be requested within 90 days from the effective date of termination unless extended in writing by the Contracting Officer.

(m)(1) The Government may, under the terms and conditions it prescribes, make partial payments and payments against costs incurred by the Contractor for the terminated portion of the contract, if the Contracting Officer believes the total of these payments will not exceed the amount to which the Contractor will be entitled.

(2) If the total payments exceed the amount finally determined to be due, the Contractor shall repay the excess to the Government upon demand, together with interest computed at the rate established by the Secretary of the Treasury under 50 U.S.C. App. 1215(b)(2). Interest shall be computed for the period from the date the excess payment is received by the Contractor to the date the excess is repaid. Interest shall not be charged on any excess payment due to a reduction in the Contractor's termination settlement proposal because of retention or other disposition of termination inventory until 10 days after the date of the retention or disposition, or a later date determined by the Contracting Officer because of the circumstances.

(n) Unless otherwise provided in this contract or by statute, the Contractor shall maintain all records and documents relating to the terminated portion of this contract for 3 years after final settlement. This includes all books and other evidence bearing on the Contractor's costs and expenses under this contract. The Contractor shall make these records and documents available to the Government, at the Contractor's office, at all reasonable times, without any direct charge. If approved by the Contracting Officer, photographs, microphotographs, or other authentic reproductions may be maintained instead of original records and documents.

(End of clause)

52.249-10 DEFAULT (FIXED-PRICE CONSTRUCTION) (APR 1984)

(a) If the Contractor refuses or fails to prosecute the work or any separable part, with the diligence that will insure

its completion within the time specified in this contract including any extension, or fails to complete the work within this time, the Government may, by written notice to the Contractor, terminate the right to proceed with the work (or the separable part of the work) that has been delayed. In this event, the Government may take over the work and complete it by contract or otherwise, and may take possession of and use any materials, appliances, and plant on the work site necessary for completing the work. The Contractor and its sureties shall be liable for any damage to the Government resulting from the Contractor's refusal or failure to complete the work within the specified time, whether or not the Contractor's right to proceed with the work is terminated. This liability includes any increased costs incurred by the Government in completing the work.

(b) The Contractor's right to proceed shall not be terminated nor the Contractor charged with damages under this clause, if--

(1) The delay in completing the work arises from unforeseeable causes beyond the control and without the fault or negligence of the Contractor. Examples of such causes include

(i) acts of God or of the public enemy,

(ii) acts of the Government in either its sovereign or contractual capacity,

(iii) acts of another Contractor in the performance of a contract with the Government,

(iv) fires,

(v) floods,

(vi) epidemics,

(vii) quarantine restrictions,

(viii) strikes,

(ix) freight embargoes,

(x) unusually severe weather, or delays of subcontractors or suppliers at any tier arising from unforeseeable causes beyond the control and without the fault or negligence of both the Contractor and the subcontractors or suppliers; and

(2) The Contractor, within 10 days from the beginning of any delay (unless extended by the Contracting Officer), notifies the Contracting Officer in writing of the causes of delay. The Contracting Officer shall ascertain the facts and the extent of delay. If, in the judgment of the Contracting Officer, the findings of fact warrant such action, the time for completing the work shall be extended. The findings of the Contracting Officer shall be final and conclusive on the parties, but subject to appeal under the Disputes clause.

(c) If, after termination of the Contractor's right to proceed, it is determined that the Contractor was not in default, or that the delay was excusable, the rights and obligations of the parties will be the same as if the termination had been issued for the convenience of the Government.

The rights and remedies of the Government in this clause are in addition to any other rights and remedies provided by law or under this contract.

(End of clause)

52.253-1 COMPUTER GENERATED FORMS (JAN 1991)

(a) Any data required to be submitted on a Standard or Optional Form prescribed by the Federal Acquisition Regulation (FAR) may be submitted on a computer generated version of the form, provided there is no change to the name, content, or sequence of the data elements on the form, and provided the form carries the Standard or Optional Form number and edition date.

(b) Unless prohibited by agency regulations, any data required to be submitted on an agency unique form prescribed by an agency supplement to the FAR may be submitted on a computer generated version of the form provided there is no change to the name, content, or sequence of the data elements on the form and provided the form carries the agency form number and edition date.

(c) If the Contractor submits a computer generated version of a form that is different than the required form, then the rights and obligations of the parties will be determined based on the content of the required form.

(End of clause)

252.201-7000 CONTRACTING OFFICER'S REPRESENTATIVE (DEC 1991)

(a) "Definition. Contracting officer's representative" means an individual designated in accordance with subsection 201.602-2 of the Defense Federal Acquisition Regulation Supplement and authorized in writing by the contracting officer to perform specific technical or administrative functions.

(b) If the Contracting Officer designates a contracting officer's representative (COR), the Contractor will receive a copy of the written designation. It will specify the extent of the COR's authority to act on behalf of the contracting officer. The COR is not authorized to make any commitments or changes that will affect price, quality, quantity, delivery, or any other term or condition of the contract.

(End of clause)

252.203-7001 PROHIBITION ON PERSONS CONVICTED OF FRAUD OR OTHER DEFENSE-CONTRACT-RELATED FELONIES (MAR 1999)

(a) Definitions. As used in this clause—

(1) “Arising out of a contract with the DoD” means any act in connection with—

(i) Attempting to obtain;

(ii) Obtaining, or

(iii) Performing a contract or first-tier subcontract of any agency, department, or component of the Department of Defense (DoD).

(2) “Conviction of fraud or any other felony” means any conviction for fraud or a felony in violation of state or Federal criminal statutes, whether entered on a verdict or plea, including a plea of *nolo contendere*, for which sentence has been imposed.

(3) “Date of conviction” means the date judgment was entered against the individual.

(b) Any individual who is convicted after September 29, 1988, of fraud or any other felony arising out of a contract with the DoD is prohibited from serving--

(1) In a management or supervisory capacity on any DoD contract or first-tier subcontract;

(2) On the board of directors of any DoD contractor or first-tier subcontractor;

(3) As a consultant, agent, or representative for any DoD contractor or first-tier subcontractor; or

(4) In any other capacity with the authority to influence, advise, or control the decisions of any DoD contractor or subcontractor with regard to any DoD contract or first-tier subcontract.

(c) Unless waived, the prohibition in paragraph (b) of this clause applies for not less than 5 years from the date of conviction.

(d) 10 U.S.C. 2408 provides that a defense contractor or first-tier subcontractor shall be subject to a criminal penalty of not more than $500,000 if convicted of knowingly—

(1) Employing a person under a prohibition specified in paragraph (b) of this clause; or

(2) Allowing such a person to serve on the board of directors of the contractor or first-tier subcontractor.

(e) In addition to the criminal penalties contained in 10 U.S.C. 2408, the Government may consider other available remedies, such as—

(1) Suspension or debarment;

(2) Cancellation of the contract at no cost to the Government; or

(3) Termination of the contract for default.

(f) The Contractor may submit written requests for waiver of the prohibition in paragraph (b) of this clause to the Contracting Officer. Requests shall clearly identify—

(1) The person involved;

(2) The nature of the conviction and resultant sentence or punishment imposed;

(3) The reasons for the requested waiver; and

(4) An explanation of why a waiver is in the interest of national security.

(g) The Contractor agrees to include the substance of this clause, appropriately modified to reflect the identity and relationship of the parties, in all first-tier subcontracts exceeding the simplified acquisition threshold in Part 2 of the Federal Acquisition Regulation, except those for commercial items or components.

(h) Pursuant to 10 U.S.C. 2408(c), defense contractors and subcontractors may obtain information as to whether a particular person has been convicted of fraud or any other felony arising out of a contract with the DoD by contacting The Office of Justice Programs, The Denial of Federal Benefits Office, U.S. Department of Justice, telephone (202) 616-3507.

(End of clause)

252.204-7000 DISCLOSURE OF INFORMATION (DEC 1991)

(a) The Contractor shall not release to anyone outside the Contractor's organization any unclassified information, regardless of medium (e.g., film, tape, document), pertaining to any part of this contract or any program related to this contract, unless--

(1) The Contracting Officer has given prior written approval; or

(2) The information is otherwise in the public domain before the date of release.

(b) Requests for approval shall identify the specific information to be released, the medium to be used, and the purpose for the release. The Contractor shall submit its request to the Contracting Officer at least 45 days before the proposed date for release.

(c) The Contractor agrees to include a similar requirement in each subcontract under this contract. Subcontractors shall submit requests for authorization to release through the prime contractor to the Contracting Officer.

(End of clause)

252.204-7003 CONTROL OF GOVERNMENT PERSONNEL WORK PRODUCT (APR 1992)

The Contractor's procedures for protecting against unauthorized disclosure of information shall not require Department of Defense employees or members of the Armed Forces to relinquish control of their work products, whether classified or not, to the contractor.

(End of clause)

252.204-7004 REQUIRED CENTRAL CONTRACTOR REGISTRATION ALTERNATE A (NOV 2003)

(a) Definitions. As used in this clause--

“Central Contractor Registration (CCR) database” means the primary Government repository for contractor information required for the conduct of business with the Government.

“Commercial and Government Entity (CAGE) code” means--

(1) A code assigned by the Defense Logistics Information Service (DLIS) to identify a commercial or Government entity; or

(2) A code assigned by a member of the North Atlantic Treaty Organization that DLIS records and maintains in the CAGE master file. This type of code is known as an “NCAGE code.”

“Data Universal Numbering System (DUNS) number” means the 9-digit number assigned by Dun and Bradstreet, Inc. (D&B) to identify unique business entities.

“Data Universal Numbering System +4 (DUNS+4) number” means the DUNS number assigned by D&B plus a 4-character suffix that may be assigned by a business concern. (D&B has no affiliation with this 4-character suffix.) This 4-character suffix may be assigned at the discretion of the business concern to establish additional CCR records for identifying alternative Electronic Funds Transfer (EFT) accounts (see Subpart 32.11 of the Federal Acquisition Regulation) for the same parent concern.

“Registered in the CCR database” means that--

(1) The Contractor has entered all mandatory information, including the DUNS number or the DUNS+4 number, into the CCR database;

(2) The Contractor's CAGE code is in the CCR database; and

(3) The Government has validated all mandatory data fields and has marked the records “Active.”

(b)(1) By submission of an offer, the offeror acknowledges the requirement that a prospective awardee shall be registered in the CCR database prior to award, during performance, and through final payment of any contract, basic agreement, basic ordering agreement, or blanket purchasing agreement resulting from this solicitation.

(2) The offeror shall enter, in the block with its name and address on the cover page of its offer, the annotation “DUNS” or “DUNS +4” followed by the DUNS or DUNS +4 number that identifies the offeror's name and address exactly as stated in the offer. The DUNS number will be used by the Contracting Officer to verify that the offeror is registered in the CCR database.

(c) If the offeror does not have a DUNS number, it should contact Dun and Bradstreet directly to obtain one.

(1) An offeror may obtain a DUNS number--

(i) If located within the United States, by calling Dun and Bradstreet at 1-866-705-5711 or via the Internet at http://www.dnb.com; or

(ii) If located outside the United States, by contacting the local Dun and Bradstreet office.

(2) The offeror should be prepared to provide the following information:

(i) Company legal business.

(ii) Tradestyle, doing business, or other name by which your entity is commonly recognized.

(iii) Company Physical Street Address, City, State, and Zip Code.

(iv) Company Mailing Address, City, State and Zip Code (if separate from physical).

(v) Company Telephone Number.

(vi) Date the company was started.

(vii) Number of employees at your location.

(viii) Chief executive officer/key manager.

(ix) Line of business (industry).

(x) Company Headquarters name and address (reporting relationship within your entity).

(d) If the Offeror does not become registered in the CCR database in the time prescribed by the Contracting Officer, the Contracting Officer will proceed to award to the next otherwise successful registered Offeror.

(e) Processing time, which normally takes 48 hours, should be taken into consideration when registering. Offerors who are not registered should consider applying for registration immediately upon receipt of this solicitation.

(f) The Contractor is responsible for the accuracy and completeness of the data within the CCR database, and for any liability resulting from the Government's reliance on inaccurate or incomplete data. To remain registered in the CCR database after the initial registration, the Contractor is required to review and update on an annual basis from the date of initial registration or subsequent updates its information in the CCR database to ensure it is current, accurate and complete. Updating information in the CCR does not alter the terms and conditions of this contract and is not a substitute for a properly executed contractual document.

(g)(1)(i) If a Contractor has legally changed its business name, “doing business as” name, or division name (whichever is shown on the contract), or has transferred the assets used in performing the contract, but has not completed the necessary requirements regarding novation and change-of-name agreements in Subpart 42.12, the Contractor shall provide the responsible Contracting Officer a minimum of one business day's written notification of its intention to (A) change the name in the CCR database; (B) comply with the requirements of Subpart 42.12 of the FAR; and (C) agree in writing to the timeline and procedures specified by the responsible Contracting Officer. The Contractor must provide with the notification sufficient documentation to support the legally changed name.

(ii) If the Contractor fails to comply with the requirements of paragraph (g)(1)(i) of this clause, or fails to perform the agreement at paragraph (g)(1)(i)(C) of this clause, and, in the absence of a properly executed novation or change-of-name agreement, the CCR information that shows the Contractor to be other than the Contractor indicated in the contract will be considered to be incorrect information within the meaning of the “Suspension of Payment” paragraph of the electronic funds transfer (EFT) clause of this contract.

(2) The Contractor shall not change the name or address for EFT payments or manual payments, as appropriate, in the CCR record to reflect an assignee for the purpose of assignment of claims (see FAR Subpart 32.8, Assignment of Claims). Assignees shall be separately registered in the CCR database. Information provided to the Contractor's CCR record that indicates payments, including those made by EFT, to an ultimate recipient other than that Contractor will be considered to be incorrect information within the meaning of the “Suspension of payment” paragraph of the EFT clause of this contract.

(h) Offerors and Contractors may obtain information on registration and annual confirmation requirements via the internet at http://www.ccr.gov or by calling 1-888-227-2423, or 269-961-5757.

(End of clause)

252.205-7000 PROVISION OF INFORMATION TO COOPERATIVE AGREEMENT HOLDERS (DEC 1991)

(a) Definition.

"Cooperative agreement holder" means a State or local government; a private, nonprofit organization; a tribal organization (as defined in section 4(c) of the Indian Self-Determination and Education Assistance Act (Pub. L. 93-268; 25 U.S.C. 450 (c))); or an economic enterprise (as defined in section 3(e) of the Indian Financing Act of 1974 (Pub. L. 93-362; 25 U.S.C. 1452(e))) whether such economic enterprise is organized for profit or nonprofit purposes; which has an agreement with the Defense Logistics Agency to furnish procurement technical assistance to business entities.

(b) The Contractor shall provide cooperative agreement holders, upon their request, with a list of those appropriate employees or offices responsible for entering into subcontracts under defense contracts. The list shall include the business address, telephone number, and area of responsibility of each employee or office.

(c) The Contractor need not provide the listing to a particular cooperative agreement holder more frequently than once a year.

(End of clause)

252.209-7000 ACQUISITION FROM SUBCONTRACTORS SUBJECT TO ONSITE INSPECTION UNDER THE INTERMEDIATE-RANGE NUCLEAR FORCES (INF) TREATY (NOV 1995)

(a) The Contractor shall not deny consideration for a subcontract award under this contract to a potential subcontractor subject to on-site inspection under the INF Treaty, or a similar treaty, solely or in part because of the actual or potential presence of Soviet inspectors at the subcontractor's facility, unless the decision is approved by the Contracting Officer.

(b) The Contractor shall incorporate this clause, including this paragraph (b), in all solicitations and contracts exceeding the simplified acquisition threshold in part 13 of the Federal Acquisition Regulation, except those for commercial items.

(End of clause)

252.209-7004 SUBCONTRACTING WITH FIRMS THAT ARE OWNED OR CONTROLLED BY THE GOVERNMENT OF A TERRORIST COUNTRY (MAR 1998)

(a) Unless the Government determines that there is a compelling reason to do so, the Contractor shall not enter into any subcontract in excess of $25,000 with a firm, or subsidiary of a firm, that is identified, on the List of Parties Excluded from Federal Procurement and Nonprocurement Programs, as being ineligible for the award of Defense contracts or subcontracts because it is owned or controlled by the government of a terrorist country.

(b) A corporate officer or a designee of the Contractor shall notify the Contracting Officer, in writing, before entering into a subcontract with a party that is identified, on the List of Parties Excluded from Federal Procurement and Nonprocurement Programs, as being ineligible for the award of Defense contracts or subcontracts because it is owned or controlled by the government of a terrorist country. The notice must include the name of the proposed subcontractor notwithstanding its inclusion on the List of Parties Excluded From Federal Procurement and Nonprocurement Programs.

(End of clause)

252.215-7000 PRICING ADJUSTMENTS (DEC 1991)

The term "pricing adjustment," as used in paragraph (a) of the clauses entitled "Price Reduction for Defective Cost or Pricing Data - Modifications," "Subcontractor Cost or Pricing Data," and "Subcontractor Cost or Pricing Data - Modifications," means the aggregate increases and/or decreases in cost plus applicable profits.

(End of clause)

252.219-7003 SMALL, SMALL DISADVANTAGED AND WOMEN-OWNED SMALL BUSINESS SUBCONTRACTING PLAN (DOD CONTRACTS) (APR. 1996)

This clause supplements the Federal Acquisition Regulation 52.219-9, Small, Small Disadvantaged and Women-Owned Small Business Subcontracting Plan, clause of this contract.

(a) *Definitions. Historically black colleges and universities*, as used in this clause, means institutions determined by the Secretary of Education to meet the requirements of 34 CFR 608.2. The term also means any nonprofit research institution that was an integral part of such a college or university before November 14, 1986.

Minority institutions, as used in this clause, means institutions meeting the requirements of section 1046(3) of the Higher Education Act of 1965 (20 U.S.C. 1135d-5(3)). The term also includes Hispanic-serving institutions as defined in section 316(b)(1) of such Act (20 U.S.C. 1059c(b)(1)).

(b) Except for company or division-wide commercial items subcontracting plans, the term *small disadvantaged business*, when used in the FAR 52.219-9 clause, includes historically black colleges and universities and minority institutions, in addition to small disadvantaged business concerns.

(c) Work under the contract or its subcontracts shall be credited toward meeting the small disadvantaged business concern goal required by paragraph (d) of the FAR 52.219-9 clause when:

(1) It is performed on Indian lands or in joint venture with an Indian tribe or a tribally-owned corporation, and

(2) It meets the requirements of 10 U.S.C. 2323a.

(d) Subcontracts awarded to workshops approved by the Committee for Purchase from People Who are Blind or Severely Disabled (41 U.S.C. 46-48), may be counted toward the Contractor's small business subcontracting goal.

(e) A mentor firm, under the Pilot Mentor-Protege Program established under Section 831 of Pub. L. 101-510, as amended, may count toward its small disadvantaged business goal, subcontracts awarded--

(f) The master plan approval referred to in paragraph (f) of the FAR 52.219-9 clause is approval by the Contractor's cognizant contract administration activity.

(g) In those subcontracting plans which specifically identify small, small disadvantaged, and women-owned small businesses, the Contractor shall notify the Administrative Contracting Officer of any substitutions of firms that are not small, small disadvantaged, or women-owned small businesses for the firms listed in the subcontracting plan. Notifications shall be in writing and shall occur within a reasonable period of time after award of the subcontract. Contractor-specified formats shall be acceptable.

(End of clause)

252.223-7006 PROHIBITION ON STORAGE AND DISPOSAL OF TOXIC AND HAZARDOUS MATERIALS (APR 1993)

(a) "Definitions".

As used in this clause --

(1) "Storage" means a non-transitory, semi-permanent or permanent holding, placement, or leaving of material. It does not include a temporary accumulation of a limited quantity of a material used in or a waste generated or resulting from authorized activities, such as servicing, maintenance, or repair of Department of Defense (DoD) items, equipment, or facilities.

(2) "Toxic or hazardous materials" means:

(i) Materials referred to in section 101(14) of the Comprehensive Environmental Response, Compensation, and Liability Act (CERCLA) of 1980 (42 U.S.C. 9601(14)) and materials designated under section 102 of CERCLA (42 U.S.C. 9602) (40 CFR part 302);

(ii) Materials that are of an explosive, flammable, or pyrotechnic nature; or

(iii) Materials otherwise identified by the Secretary of Defense as specified in DoD regulations.

(b) In accordance with 10 U.S.C. 2692, the Contractor is prohibited from storing or disposing of non-DoD-owned toxic or hazardous materials on a DoD installation, except to the extent authorized by a statutory exception to 10 U.S.C. 2692 or as authorized by the Secretary of Defense or his designee.

(End of clause)

252.225-7012 PREFERENCE FOR CERTAIN DOMESTIC COMMODITIES (JUN 2004)

(a) Definitions. As used in this clause--

(1) Component means any item supplied to the Government as part of an end product or of another component.

(2) End product means supplies delivered under a line item of this contract.

(3) United States means the 50 States, the District of Columbia, and outlying areas.

(4) U.S.-flag vessel means a vessel of the United States or belonging to the United States, including any vessel registered or having national status under the laws of the United States.

(b) The Contractor shall deliver under this contract only such of the following items, either as end products or components, that have been grown, reprocessed, reused, or produced in the United States:

(1) Food.

(2) Clothing.

(3) Tents, tarpaulins, or covers.

(4) Cotton and other natural fiber products.

(5) Woven silk or woven silk blends.

(6) Spun silk yarn for cartridge cloth.

(7) Synthetic fabric, and coated synthetic fabric, including all textile fibers and yarns that are for use in such fabrics.

(8) Canvas products.

(9) Wool (whether in the form of fiber or yarn or contained in fabrics, materials, or manufactured articles).

(10) Any item of individual equipment (Federal Supply Class 8465) manufactured from or containing fibers, yarns, fabrics, or materials listed in this paragraph (b).

(c) This clause does not apply--

(1) To items listed in section 25.104(a) of the Federal Acquisition Regulation (FAR), or other items for which the Government has determined that a satisfactory quality and sufficient quantity cannot be acquired as and when needed at U.S. market prices;

(2) To end products incidentally incorporating cotton, other natural fibers, or wool, for which the estimated value of the cotton, other natural fibers, or wool--

(i) Is not more than 10 percent of the total price of the end product; and (ii) Does not exceed the simplified acquisition threshold in FAR part 2;

(3) To waste and byproducts of cotton or wool fiber for use in the production of propellants and explosives;

(4) To foods, other than fish, shellfish, or seafood, that have been manufactured or processed in the United States, regardless of where the foods (and any component if applicable) were grown or produced. Fish, shellfish, or seafood manufactured or processed in the United States and fish, shellfish, or seafood contained in foods manufactured or processed in the United States shall be provided in accordance with paragraph (d) of this clause;

(5) To chemical warfare protective clothing produced in the countries listed in subsection 225.872-1 of the Defense FAR Supplement; or

(6) To fibers and yarns that are for use in synthetic fabric or coated synthetic fabric (but does apply to the synthetic or coated synthetic fabric itself), if--

(i) The fabric is to be used as a component of an end product that is not a textile product. Examples of textile products, made in whole or in part of fabric, include--

(A) Draperies, floor coverings, furnishings, and bedding (Federal Supply Group 72, Household and Commercial Furnishings and Appliances);

(B) Items made in whole or in part of fabric in Federal Supply Group 83, Textile/leather/furs/apparel/findings/ tents/flags, or Federal Supply Group 84, Clothing, Individual Equipment and Insignia;

(C) Upholstered seats (whether for household, office, or other use); and

(D) Parachutes (Federal Supply Class 1670); or

(ii) The fibers and yarns are para-aramid fibers and yarns manufactured in the Netherlands.

(d)(1) Fish, shellfish, and seafood delivered under this contract, or contained in foods delivered under this contract--

(i) Shall be taken from the sea by U.S.-flag vessels; or

(ii) If not taken from the sea, shall be obtained from fishing within the United States; and

(2) Any processing or manufacturing of the fish, shellfish, or seafood shall be performed on a U.S.-flag vessel or in the United States.

(End of clause)

252.225-7031 SECONDARY ARAB BOYCOTT OF ISRAEL (APR 2003)

(a) Definitions. As used in this provision--

(1) Foreign person means any person (including any individual, partnership, corporation, or other form of association) other than a United States person.

(2) United States person is defined in 50 U.S.C. App. 2415(2) and means--

(i) Any United States resident or national (other than an individual resident outside the United States who is employed by other than a United States person);

(ii) Any domestic concern (including any permanent domestic establishment of any foreign concern); and

(iii) Any foreign subsidiary or affiliate (including any permanent foreign establishment) of any domestic concern that is controlled in fact by such domestic concern.

(b) Certification. If the offeror is a foreign person, the offeror certifies, by submission of an offer, that it--

(1) Does not comply with the Secondary Arab Boycott of Israel; and

(2) Is not taking or knowingly agreeing to take any action, with respect to the Secondary Boycott of Israel by Arab countries, which 50 U.S.C. App. 2407(a) prohibits a United States person from taking.

(End of provision)

252.226-7001 UTILIZATION OF INDIAN ORGANIZATIONS AND INDIAN-OWNED ECONOMIC ENTERPRISES, AND NATIVE HAWAIIAN SMALL BUSINESS CONCERNS (OCT 2003)

(a) Definitions. As used in this clause--

Indian means any person who is a member of any Indian tribe, band, group, pueblo, or community that is recognized by the Federal Government as eligible for services from the Bureau of Indian Affairs (BIA) in accordance with 25 U.S.C. 1452(c) and any ``Native" as defined in the Alaska Native Claims Settlement Act (43 U.S.C. 1601).

Indian organization means the governing body of any Indian tribe or entity established or recognized by the governing body of an Indian tribe for the purposes of 25 U.S.C. chapter 17.

Indian-owned economic enterprise means any Indian-owned (as determined by the Secretary of the Interior) commercial, industrial, or business activity established or organized for the purpose of profit, provided that Indian ownership constitutes not less than 51 percent of the enterprise.

Indian tribe means any Indian tribe, band, group, pueblo, or community, including native villages and native groups (including corporations organized by Kenai, Juneau, Sitka, and Kodiak) as defined in the Alaska Native Claims Settlement Act, that is recognized by the Federal Government as eligible for services from BIA in accordance with 25 U.S.C. 1452(c).

Interested party means a contractor or an actual or prospective offeror whose direct economic interest would be affected by the award of a subcontract or by the failure to award a subcontract.

Native Hawaiian small business concern means an entity that is--

(1) A small business concern as defined in section 3 of the Small Business Act (15 U.S.C. 632) and relevant implementing regulations; and

(2) Owned and controlled by a Native Hawaiian as defined in 25 U.S.C. 4221(9).

(b) The Contractor shall use its best efforts to give Indian organizations, Indian-owned economic enterprises, and Native Hawaiian small business concerns the maximum practicable opportunity to participate in the subcontracts it awards, to the fullest extent consistent with efficient performance of the contract.

(c) The Contracting Officer and the Contractor, acting in good faith, may rely on the representation of an Indian organization, Indian-owned economic enterprise, or Native Hawaiian small business concern as to its eligibility, unless an interested party challenges its status or the Contracting Officer has independent reason to question that status.

(d) In the event of a challenge to the representation of a subcontractor, the Contracting Officer will refer the matter to--

(1) For matters relating to Indian organizations or Indian-owned economic enterprises: U.S. Department of the Interior, Bureau of Indian Affairs, Attn: Chief, Division of Contracting and Grants Administration, 1849 C Street NW, MS-2626-MIB, Washington, DC 20240-4000. The BIA will determine the eligibility and will notify the Contracting Officer.

(2) For matters relating to Native Hawaiian small business concerns: Department of Hawaiian Home Lands, PO Box 1879, Honolulu, HI 96805. The Department of Hawaiian Home Lands will determine the eligibility and will notify the Contracting Officer.

(e) No incentive payment will be made--

(1) While a challenge is pending; or

(2) If a subcontractor is determined to be an ineligible participant.

(f)(1) The Contractor, on its own behalf or on behalf of a subcontractor at any tier, may request an incentive payment in accordance with this clause.

(2) The incentive amount that may be requested is 5 percent of the estimated cost, target cost, or fixed price included in the subcontract at the time of award to the Indian organization, Indian-owned economic enterprise, or Native Hawaiian small business concern.

(3) In the case of a subcontract for commercial items, the Contractor may receive an incentive payment only if the subcontracted items are produced or manufactured in whole or in part by an Indian organization, Indian-owned economic enterprise, or Native Hawaiian small business concern.

(4) The Contractor has the burden of proving the amount claimed and shall assert its request for an incentive payment prior to completion of contract performance.

(5) The Contracting Officer, subject to the terms and conditions of the contract and the availability of funds, will authorize an incentive payment of 5 percent of the estimated cost, target cost, or fixed price included in the subcontract awarded to the Indian organization, Indian-owned economic enterprise, or Native Hawaiian small business concern.

(6) If the Contractor requests and receives an incentive payment on behalf of a subcontractor, the Contractor is obligated to pay the subcontractor the incentive amount.

(g) The Contractor shall insert the substance of this clause, including this paragraph (g), in all subcontracts exceeding $500,000 for which further subcontracting opportunities may exist.

(End of clause)

252.227-7033 RIGHTS IN SHOP DRAWINGS (APR 1966)

(a) Shop drawings for construction means drawings, submitted to the Government by the Construction Contractor, subcontractor or any lower-tier subcontractor pursuant to a construction contract, showing in detail (i) the proposed fabrication and assembly of structural elements and (ii) the installation (i.e., form, fit, and attachment details) of materials or equipment. The Government may duplicate, use, and disclose in any manner and for any purpose shop drawings delivered under this contract.

(b) This clause, including this paragraph (b), shall be included in all subcontracts hereunder at any tier.

252.231-7000 SUPPLEMENTAL COST PRINCIPLES (DEC 1991)

When the allowability of costs under this contract is determined in accordance with part 31 of the Federal Acquisition Regulation (FAR), allowability shall also be determined in accordance with part 231 of the Defense FAR Supplement, in effect on the date of this contract.

(End of clause)

252.236-7000 MODIFICATION PROPOSALS - PRICE BREAKDOWN. (DEC 1991)

(a) The Contractor shall furnish a price breakdown, itemized as required and within the time specified by the Contracting Officer, with any proposal for a contract modification.

(b) The price breakdown --

(1) Must include sufficient detail to permit an analysis of profit, and of all costs for --

(i) Material;

(ii) Labor;

(iii) Equipment;

(iv) Subcontracts; and

(v) Overhead; and

(2) Must cover all work involved in the modification, whether the work was deleted, added, or changed.

(c) The Contractor shall provide similar price breakdowns to support any amounts claimed for subcontracts.

(d) The Contractor's proposal shall include a justification for any time extension proposed.

252.242-7000 POSTAWARD CONFERENCE (DEC 1991)

The Contractor agrees to attend any postaward conference convened by the contracting activity or contract administration office in accordance with Federal Acquisition Regulation subpart 42.5.

(End of clause)

252.242-7004 MATERIAL MANAGEMENT AND ACCOUNTING SYSTEM (SEP 1996)

(a) Definitions. As used in this clause--

(1) Material management and accounting system means the Contractor's system or systems for planning, controlling, and accounting for the acquisition, use, issuing, and disposition of material. Material management and accounting systems may be manual or automated. They may be stand-alone systems or they may be integrated with planning, engineering, estimating, purchasing, inventory, accounting, or other systems.

(2) Valid time-phased requirements means material which is--

Needed to fulfill the production plan, including reasonable quantities for scrap, shrinkage, yield, etc.; and

(ii) Charged/billed to contracts or other cost objectives in a manner consistent with the need to fulfill the production plan.

(3) Contractor means a business unit as defined in section 31.001 of the Federal Acquisition Regulation (FAR).

(b) General. The Contractor agrees to--

(1) Maintain a material management and accounting system (MMAS) that--

(i) Reasonably forecasts material requirements;

(ii) Ensures that costs of purchased and fabricated material charged or allocated to a contract are based on valid time-phased requirements; and

(iii) Maintains a consistent, equitable, and unbiased logic for costing of material transactions.

(2) Assess its MMAS and take reasonable action to comply with the MMAS standards in paragraph (f) of this clause.

(c) Applicability. Paragraphs (d) and (e) of this clause apply only if the Contractor--

(1) Is a large business; and

(2) Received, in its fiscal year preceding award of this contract, Department of Defense prime contracts or subcontracts, and their modifications totaling--

(i) $70 million or more; or

(ii) $30 million or more (but less than $70 million), and is notified in writing by the Contracting Officer that paragraphs (d) and (e) apply.

(d) Disclosure, demonstration, and maintenance requirements. (1) The Contractor shall--

Disclose its MMAS to the Administrative Contracting Officer in writing; and

(ii) If requested by the Administrative Contracting Officer, demonstrate that the MMAS conforms to the standards in paragraph (f) of this clause.

(2) An MMAS disclosure is adequate when the Contractor has provided the Administrative Contracting Officer with documentation which--

(i) Accurately describes those policies, procedures, and practices that the Contractor currently uses in its MMAS; and

(ii) Provides sufficient detail for the Government to reasonably make an informed judgment regarding the adequacy of the MMAS.

(3) An MMAS demonstration is adequate when the Contractor has provided the Administrative Contracting Officer--

(i) Sufficient evidence to demonstrate the degree of compliance of its MMAS with the standards at paragraph (f) of this clause; and

(ii) Identification of any significant deficiencies, the estimated cost impact of the deficiency, and a comprehensive corrective action plan.

(4) The Contractor shall disclose significant changes in its MMAS to the Administrative Contracting Officer within 30 days of implementation.

(5) If the contractor desires the Government to protect such information as privileged or confidential, the Contractor shall--

(i) Notify the Government representative to whom the information is submitted, i.e., the ACO, or the auditor; and

(ii) Ensure an appropriate legend is on the face of the document(s) at the time of submission.

(e) Deficiencies. (1) If the Contractor receives a report which identifies deficiencies in its MMAS, the Contractor agrees to respond as follows--

(i) If the Contractor agrees with the report findings and recommendations, the Contractor shall--

(A) Within 30 days, state its agreement in writing; and

(B) Within 60 days, correct the deficiencies or submit a corrective action plan.

(ii) If the Contractor disagrees with the report findings and recommendations, the Contractor shall, within 30 days, state its rationale for each area of disagreement.

(2) The Administrative Contracting Officer shall evaluate the Contractor's response and notify the Contractor of the--

(i) Determination concerning remaining deficiencies;

(ii) Adequacy of any proposed or completed corrective action plan; and

(iii) Need for any new or revised corrective action plan.

(f) MMAS standards. MMAS systems shall have adequate internal accounting and administrative controls to ensure system and data integrity, and comply with the following:

(1) Have an adequate system description including policies, procedures, and operating instructions which comply with the Federal Acquisition Regulation and Defense FAR Supplement;

(2) Ensure that costs of purchased and fabricated material charged or allocated to a contract are based on valid time-phased requirements as impacted by minimum/economic order quantity restrictions--

(i) A 98 percent bill of material accuracy and a 95 percent master production schedule accuracy are desirable as a goal in order to ensure that requirements are both valid and appropriately time-phased.

(ii) If systems have accuracy levels below these, the Contractor shall demonstrate that--

(A) There is no material harm to the Government due to lower accuracy levels; and

(B) The cost to meet the accuracy goals is excessive in relation to the impact on the Government;

(3) Provide a mechanism to identify, report, and resolve system control weaknesses and manual override. Systems should identify operational exceptions such as excess/residual inventory as soon as known;

(4) Provide audit trails and maintain records (manual and those in machine readable form) necessary to evaluate system logic and to verify through transaction testing that the system is operating as desired;

(5) Establish and maintain adequate levels of record accuracy, and include reconciliation of recorded inventory quantities to physical inventory by part number on a periodic basis. A 95 percent accuracy level is desirable. If systems have an accuracy level below 95 percent, the Contractor shall demonstrate that--

(i) There is no material harm to the Government due to lower accuracy levels; and

(ii) The cost to meet the accuracy goal is excessive in relation to the impact on the Government;

(6) Provide detailed descriptions of circumstances which will result in manual or system generated transfers of parts;

(7) Maintain a consistent, equitable, and unbiased logic for costing of material transactions--

(i) The Contractor shall maintain and disclose written policies describing the transfer methodology and the loan/pay-back technique.

(ii) The costing methodology may be standard or actual cost, or any of the inventory costing methods in 48 CFR 9904.411-50(b). Consistency shall be maintained across all contract and customer types, and from accounting period to accounting period for initial charging and transfer charging.

(iii) The system should transfer parts and associated costs within the same billing period. In the few instances where this may not be appropriate, the Contractor may accomplish the material transaction using a loan/pay-back technique. The “loan/pay-back technique” means that the physical part is moved temporarily from the contract, but the cost of the part remains on the contract. The procedures for the loan/pay-back technique must be approved by the Administrative Contracting Officer. When the technique is used, the Contractor shall have controls to ensure--

(A) Parts are paid back expeditiously;

(B) Procedures and controls are in place to correct any overbilling that might occur;

(C) Monthly, at a minimum, identification of the borrowing contract and the date the part was borrowed; and

(D) The cost of the replacement part is charged to the borrowing contract;

(8) Where allocations from common inventory accounts are used, have controls (in addition to those in paragraphs (b)(2) and (7) of this clause) to ensure that--

(i) Reallocations and any credit due are processed no less frequently than the routine billing cycle;

(ii) Inventories retained for requirements which are not under contract are not allocated to contracts; and

(iii) Algorithms are maintained based on valid and current data;

(9) Notwithstanding FAR 45.505-3(f)(1)(ii), have adequate controls to ensure that physically commingled inventories that may include material for which costs are charged or allocated to fixed-price, cost-reimbursement, and commercial contracts do not compromise requirements of any of the standards in paragraphs (f)(1) through (8) of this clause. Government furnished material shall not be--

(i) Physically commingled with other material; or

(ii) Used on commercial work; and

(10) Be subjected to periodic internal audits to ensure compliance with established policies and procedures.

(End of clause)

252.243-7001 PRICING OF CONTRACT MODIFICATIONS (DEC 1991)

When costs are a factor in any price adjustment under this contract, the contract cost principles and procedures in FAR part 31 and DFARS part 231, in effect on the date of this contract, apply.

252.243-7002 REQUESTS FOR EQUITABLE ADJUSTMENT (MAR 1998)

(a) The amount of any request for equitable adjustment to contract terms shall accurately reflect the contract adjustment for which the Contractor believes the Government is liable. The request shall include only costs for performing the change, and shall not include any costs that already have been reimbursed or that have been separately claimed. All indirect costs included in the request shall be properly allocable to the change in accordance with applicable acquisition regulations.

(b) In accordance with 10 U.S.C. 2410(a), any request for equitable adjustment to contract terms that exceeds the simplified acquisition threshold shall bear, at the time of submission, the following certificate executed by an individual authorized to certify the request on behalf of the Contractor:

I certify that the request is made in good faith, and that the supporting data are accurate and complete to the best of my knowledge and belief.

(Official's Name)

(Title)

(c) The certification in paragraph (b) of this clause requires full disclosure of all relevant facts, including--

(1) Cost or pricing data if required in accordance with subsection 15.403-4 of the Federal Acquisition Regulation (FAR); and

(2) Information other than cost or pricing data, in accordance with subsection 15.403-3 of the FAR, including actual cost data and data to support any estimated costs, even if cost or pricing data are not required.

(d) The certification requirement in paragraph (b) of this clause does not apply to----

(1) Requests for routine contract payments; for example, requests for payment for accepted supplies and services, routine vouchers under a cost-reimbursement type contract, or progress payment invoices; or

(2) Final adjustment under an incentive provision of the contract.

252.247-7023 TRANSPORTATION OF SUPPLIES BY SEA (MAY 2002)

(a) Definitions. As used in this clause --

(1) "Components" means articles, materials, and supplies incorporated directly into end products at any level of manufacture, fabrication, or assembly by the Contractor or any subcontractor.

(2) "Department of Defense" (DoD) means the Army, Navy, Air Force, Marine Corps, and defense agencies.

(3) "Foreign flag vessel" means any vessel that is not a U.S.-flag vessel.

(4) "Ocean transportation" means any transportation aboard a ship, vessel, boat, barge, or ferry through international waters.

(5) "Subcontractor" means a supplier, materialman, distributor, or vendor at any level below the prime contractor whose contractual obligation to perform results from, or is conditioned upon, award of the prime contract and who is performing any part of the work or other requirement of the prime contract.

(6) "Supplies" means all property, except land and interests in land, that is clearly identifiable for eventual use by or owned by the DoD at the time of transportation by sea.

(i) An item is clearly identifiable for eventual use by the DoD if, for example, the contract documentation contains a reference to a DoD contract number or a military destination.

(ii) "Supplies" includes (but is not limited to) public works; buildings and facilities; ships; floating equipment and vessels of every character, type, and description, with parts, subassemblies, accessories, and equipment; machine tools; material; equipment; stores of all kinds; end items; construction materials; and components of the foregoing.

(7) "U.S.-flag vessel" means a vessel of the United States or belonging to the United States, including any vessel registered or having national status under the laws of the United States.

(b)(1) The Contractor shall use U.S.-flag vessels when transporting any supplies by sea under this contract.

(2) A subcontractor transporting supplies by sea under this contract shall use U.S.-flag vessels if--

(i) This contract is a construction contract; or

(ii) The supplies being transported are--

(A) Noncommercial items; or

(B) Commercial items that--

(1) The Contractor is reselling or distributing to the Government without adding value (generally, the Contractor does not add value to items that it contracts for f.o.b. destination shipment);

(2) Are shipped in direct support of U.S. military contingency operations, exercises, or forces deployed in humanitarian or peacekeeping operations; or

(3) Are commissary or exchange cargoes transported outside of the Defense Transportation System in accordance with 10 U.S.C. 2643.

(c) The Contractor and its subcontractors may request that the Contracting Officer authorize shipment in foreign-flag vessels, or designate available U.S.-flag vessels, if the Contractor or a subcontractor believes that --

(1) U.S.-flag vessels are not available for timely shipment;

(2) The freight charges are inordinately excessive or unreasonable; or

(3) Freight charges are higher than charges to private persons for transportation of like goods.

(d) The Contractor must submit any request for use of other than U.S.-flag vessels in writing to the Contracting Officer at least 45 days prior to the sailing date necessary to meet its delivery schedules. The Contracting Officer will process requests submitted after such date(s) as expeditiously as possible, but the Contracting Officer's failure to grant approvals to meet the shipper's sailing date will not of itself constitute a compensable delay under this or any other clause of this contract. Requests shall contain at a minimum --

(1) Type, weight, and cube of cargo;

(2) Required shipping date;

(3) Special handling and discharge requirements;

(4) Loading and discharge points;

(5) Name of shipper and consignee;

(6) Prime contract number; and

(7) A documented description of efforts made to secure U.S.-flag vessels, including points of contact (with names and telephone numbers) with at least two U.S.-flag carriers contacted. Copies of telephone notes, telegraphic and facsimile message or letters will be sufficient for this purpose.

(e) The Contractor shall, within 30 days after each shipment covered by this clause, provide the Contracting Officer and the Maritime Administration, Office of Cargo Preference, U.S. Department of Transportation, 400 Seventh Street SW., Washington, DC 20590, one copy of the rated on board vessel operating carrier's ocean bill of lading, which shall contain the following information:

(1) Prime contract number;

(2) Name of vessel;

(3) Vessel flag of registry;

(4) Date of loading;

(5) Port of loading;

(6) Port of final discharge;

(7) Description of commodity;

(8) Gross weight in pounds and cubic feet if available;

(9) Total ocean freight in U.S. dollars; and

(10) Name of the steamship company.

(f) The Contractor shall provide with its final invoice under this contract a representation that to the best of its knowledge and belief--

(1) No ocean transportation was used in the performance of this contract;

(2) Ocean transportation was used and only U.S.-flag vessels were used for all ocean shipments under the contract;

(3) Ocean transportation was used, and the Contractor had the written consent of the Contracting Officer for all non-U.S.-flag ocean transportation; or

(4) Ocean transportation was used and some or all of the shipments were made on non-U.S.-flag vessels without the written consent of the Contracting Officer. The Contractor shall describe these shipments in the following format:

ITEM DESCRIPTION	CONTRACT LINE ITEMS	QUANTITY

TOTAL_____

(g) If the final invoice does not include the required representation, the Government will reject and return it to the Contractor as an improper invoice for the purposes of the Prompt Payment clause of this contract. In the event there has been unauthorized use of non-U.S.-flag vessels in the performance of this contract, the Contracting Officer is entitled to equitably adjust the contract, based on the unauthorized use.

(h) In the award of subcontracts for the types of supplies described in paragraph (b)(2) of this clause, the Contractor shall flow down the requirements of this clause as follows:

(1) The Contractor shall insert the substance of this clause, including this paragraph (h), in subcontracts that exceed the simplified acquisition threshold in part 2 of the Federal Acquisition Regulation.

(2) The Contractor shall insert the substance of paragraphs (a) through (e) of this clause, and this paragraph (h), in subcontracts that are at or below the simplified acquisition threshold in part 2 of the Federal Acquisition Regulation.

(End of clause)

252.247-7024 NOTIFICATION OF TRANSPORTATION OF SUPPLIES BY SEA (MAR 2000)

(a) The Contractor has indicated by the response to the solicitation provision, Representation of Extent of Transportation by Sea, that it did not anticipate transporting by sea any supplies. If, however, after the award of this contract, the Contractor learns that supplies, as defined in the Transportation of Supplies by Sea clause of this contract, will be transported by sea, the Contractor --

(1) Shall notify the Contracting Officer of that fact; and

(2) Hereby agrees to comply with all the terms and conditions of the Transportation of Supplies by Sea clause of this contract.

(b) The Contractor shall include this clause; including this paragraph (b), revised as necessary to reflect the relationship of the contracting parties--

(1) In all subcontracts under this contract, if this contract is a construction contract; or

(2) If this contract is not a construction contract, in all subcontracts under this contract that are for--

(i) Noncommercial items; or

(ii) Commercial items that--

(A) The Contractor is reselling or distributing to the Government without adding value (generally, the Contractor does not add value to items that it subcontracts for f.o.b. destination shipment);

(B) Are shipped in direct support of U.S. military contingency operations, exercises, or forces deployed in humanitarian or peacekeeping operations; or

(C) Are commissary or exchange cargoes transported outside of the Defense Transportation System in accordance with 10 U.S.C. 2643.

(End of clause)

Section 00800 - Special Contract Requirements

CLAUSES INCORPORATED BY FULL TEXT

52.211-10 COMMENCEMENT, PROSECUTION, AND COMPLETION OF WORK (APR 1984)

The Contractor shall be required to (a) commence work under this contract within 5 calendar days after the date the Contractor receives the notice to proceed, (b) prosecute the work diligently, and (c) complete the entire work ready for use not later than 270 calendar days from notice to proceed. * The time stated for completion shall include final cleanup of the premises.

*The Contracting Officer shall specify either a number of days after the date the contractor receives the notice to proceed, or a calendar date.

(End of clause)

52.211-12 LIQUIDATED DAMAGES--CONSTRUCTION (SEP 2000)

(a) If the Contractor fails to complete the work within the time specified in the contract, the Contractor shall pay liquidated damages to the Government in the amount of $826.73 for each calendar day of delay until the work is completed or accepted.

(b) If the Government terminates the Contractor's right to proceed, liquidated damages will continue to accrue until the work is completed. These liquidated damages are in addition to excess costs of repurchase under the Termination clause.

(End of clause)

52.217-7 OPTION FOR INCREASED QUANTITY--SEPARATELY PRICED LINE ITEM (MAR 1989)

The Government may require the delivery of the numbered line item, identified in the Schedule as an option item, in the quantity and at the price stated in the Schedule. The Contracting Officer may exercise the option by written notice to the Contractor within 30 days of contract award. Delivery of added items shall continue at the same rate that like items are called for under the contract, unless the parties otherwise agree.

(End of clause)

52.219-4002 REPORTING REQUIREMENTS--SUBCONTRACTING PLAN (CESAD-CT JUL 1993)

(a) Retainage will be withheld from progress payments in an amount sufficient to protect the Government's ability to assess Liquidated Damages in accordance with FAR clause 52.219-0016 for failure to submit timely SF 294 and SF 295 Reports. The amount of retainage will be determined in accordance with the following formula:
(b) Total dollar amount proposed for subcontracting to small business multiplied by percentage of actual progress on the contract, up to a maximum of 10% of the given progress payment, shall be withheld from the next progress payment due after a contractor fails to submit a required report. If one or more reports have been submitted before such failure, formula for determining the amount of retainage will be adjusted by deducting any amounts reported as

subcontracted to small business from the total dollar amount proposed to be subcontracted and the difference multiplied by the percent of actual progress, up to a maximum of 10% of the given progress payment.

(End of clause)

52.223-9 ESTIMATE OF PERCENTAGE OF RECOVERED MATERIAL CONTENT FOR EPA-DESIGNATED PRODUCTS (AUG 2000)

(a) Definitions. As used in this clause--

Postconsumer material means a material or finished product that has served its intended use and has been discarded for disposal or recovery, having completed its life as a consumer item. Postconsumer material is a part of the broader category of "recovered material."

Recovered material means waste materials and by-products recovered or diverted from solid waste, but the term does not include those materials and by-products generated from, and commonly reused within, an original manufacturing process.

(b) The Contractor, on completion of this contract, shall--

(1) Estimate the percentage of the total recovered material used in contract performance, including, if applicable, the percentage of postconsumer material content; and

(2) Submit this estimate to Savannah District Office.

(End of clause)

52.223-4002 U.S. ARMY CORPS OF ENGINEERS SAFETY AND HEALTH REQUIREMENTS MANUAL, EM 385-1-1

This paragraph applies to contracts and purchase orders that require the contractor to comply with EM 385-1-1 (e.g., contracts that include the Accident Prevention clause at FAR 52.236-13 and/or other safety provisions). EM 385-1-1 and its changes are available at http://www.hq.usace.army.mil. (At the HQ homepage, select Safety and Occupational Health.) The Contractor shall be responsible for complying with the current edition and all changes posted on the web through the date that is 10 calendar days prior to the date offers are due. If the solicitation is amended to extend the time set for receipt of offers, the 10 calendar days rule stated above shall be applied against the amended date. (For example, if offers are due on 10 April, all changes posted on or before 31 March shall apply to the contract. If the time for receipt of offers is extended from 10 April to 20 April, all changes posted on or before 10 April shall apply to the contract.)

52.228-4002 REQUIRED INSURANCE (FEB 1987 SAS) (Ref. FAR 28.307)

(a) The Contractor shall procure and maintain during the entire period of his performance under this contract the following minimum insurance:

Comprehensive and Employer's Liability Insurance in the amount required by the State law in which the work is to be performed under this contract.

Comprehensive General Liability Insurance in an amount not less than $500,000 per accident.

Automobile Liability Insurance: $200,000 per person and $500,000

per accident for bodily injury liability and $20,000 property damage liability.

(b) Prior to the commencement of work hereunder, the Contractor shall furnish to the Contracting Officer a certificate or written statement of the above-required insurance. The policies evidencing required insurance shall contain an endorsement to the effect that cancellation, or any material change in the policies adversely affecting the interests of the Government in such insurance, shall not be effective for such period as may be prescribed by the laws of the State in which this contract is to be performed and in no event less than 30 days after written notice thereof to the Contracting Officer.

(c) The Contractor agrees to insert the substance of this clause, including this subparagraph (c), in all subcontracts hereunder.

(End of clause)

52.231-5000 EQUIPMENT OWNERSHIP AND OPERATING EXPENSE SCHEDULE
MAR 1995)--EFARS

(a) This clause does not apply to terminations. See 52.249-5000, Basis for Settlement of Proposals and FAR Part 49.

(b) Allowable cost for construction and marine plant and equipment in sound workable condition owned or controlled and furnished by a contractor or subcontractor at any tier shall be based on actual cost data for each piece of equipment or groups of similar serial and series for which the Government can determine both ownership and operating costs from the contractor's accounting records. When both ownership and operating costs cannot be determined for any piece of equipment or groups of similar serial or series equipment from the contractor's accounting records, costs for that equipment shall be based upon the applicable provisions of EP 1110-1-8, Construction Equipment Ownership and Operating Expense Schedule, Region III. Working conditions shall be considered to be average for determining equipment rates using the schedule unless specified otherwise by the contracting officer. For equipment not included in the schedule, rates for comparable pieces of equipment may be used or a rate may be developed using the formula provided in the schedule. For forward pricing, the schedule in effect at the time of negotiations shall apply. For retroactive pricing, the schedule in effect at the time the work was performed shall apply.

(c) Equipment rental costs are allowable, subject to the provisions of FAR 31.105(d)(ii) and FAR 31.205-36. Rates for equipment rented from an organization under common control, lease-purchase arrangements, and sale-leaseback arrangements, will be determined using the schedule, except that actual rates will be used for equipment leased from an organization under common control that has an established practice of leasing the same or similar equipment to unaffiliated lessees.

(d) When actual equipment costs are proposed and the total amount of the pricing action exceeds the small purchase threshold, the contracting officer shall request the contractor to submit either certified cost or pricing data, or partial/limited data, as appropriate. The data shall be submitted on Standard Form 1411, Contract Pricing Proposal Cover Sheet.

(End of clause)

52.232-4007 ACCOUNTING AND APPROPRIATION DATA (APR 1989 CESAS-RM)

To be determined at contract award.

(End of clause)

52.232-4008 DESIGNATED BILLING OFFICE (APR 1989 CESAS-RM)

Invoices will be mailed to:

U.S. Army Corps of Engineers
P.O. Box 558
Hinesville, Georgia 31313-0558

(End of Clause)

52.232-4009 DESIGNATED PAYMENT OFFICE (AUG 1998 CESAS-RM-F)

Payment will be made by:
U.S. Army Corps of Engineers Finance Center
ATTN: CEFC-AO-P
5720 Integrity Drive
Millington, TN 38054-5005
(End of clause)

52.236-1 PERFORMANCE OF WORK BY THE CONTRACTOR (APR 1984)

The Contractor shall perform on the site, and with its own organization, work equivalent to at least twenty percent percent of the total amount of work to be performed under the contract. This percentage may be reduced by a supplemental agreement to this contract if, during performing the work, the Contractor requests a reduction and the Contracting Officer determines that the reduction would be to the advantage of the Government.

(End of clause)

52.236-4 PHYSICAL DATA (APR 1984)

Data and information furnished or referred to below is for the Contractor's information. The Government shall not be responsible for any interpretation of or conclusion drawn from the data or information by the Contractor.

(a) The indications of physical conditions on the drawings and in the specifications are the result of site investigations by . . . . . [insert a description of investigational methods used, such as surveys, auger borings, core borings, test pits, probings, test tunnels].

(b) Weather conditions . . . . . (insert a summary of weather records and warnings).

(c) Transportation facilities . . . . . (insert a summary of transportation facilities providing access from the site, including information about their availability and limitations.

(d) . . . . . (insert other pertinent information).

(End of clause)

52.236-14 AVAILABILITY AND USE OF UTILITY SERVICES (APR 1984)

(a) The Government shall make all reasonably required amounts of utilities available to the Contractor from existing outlets and supplies, as specified in the contract. Unless otherwise provided in the contract, the amount of each utility service consumed shall be charged to or paid for by the Contractor at prevailing rates charged to the Government or, where the utility is produced by the Government, at reasonable rates determined by the Contracting Officer. The Contractor shall carefully conserve any utilities furnished without charge.

(b) The Contractor, at its expense and in a workmanlike manner satisfactory to the Contracting Officer, shall install and maintain all necessary temporary connections and distribution lines, and all meters required to measure the amount of each utility used for the purpose of determining charges. Before final acceptance of the work by the Government, the Contractor shall remove all the temporary connections, distribution lines, meters, and associated paraphernalia.

(End of clause)

52.236-4013 CONTRACTOR-PREPARED NETWORK ANALYSIS SYSTEM
(January 2002 SAS) (Ref. DFARS 236.273)

The progress chart to be prepared by the contractor pursuant to FAR 52.236-15, Schedules for Construction Contracts, shall utilize the Critical Path Method (CPM) of network calculation. (See Attachment 1 to Section 00800).

52.236-4015 PRECONSTRUCTION CONFERENCE (OCT 1988 SAS) (Ref. FAR 36.305)

(a) A preconstruction conference will be arranged by the Area/Resident Engineer after award of contract and before commencement of work. The Area/Resident Engineer will notify the Contractor of the time and date set for the meeting. At this conference, the Contractor shall be oriented with respect to Government procedures and line of authority, contractual, administrative, and construction matters.

(b) The Contractor shall bring to this conference, in completed form, a Certificate of Insurance, plus the following items in either completed or draft form:

Accident Prevention Plan (5 copies)
(use format shown in Attachment 1 to SECTION 00800)
Quality Control Plan (5 copies)
Letter Appointing Superintendent
Transmittal Register
Power of Attorney and Certified Copy of Resolution
Network Analysis System, when applicable
List of Subcontractors

(c) A letter of record will be written documenting all items discussed at the conference, and a copy will be furnished by the Area/Resident Engineer to all in attendance.

(End of clause)

52.236-4016 VIDEO TAPING OPERATING AND MAINTENANCE INSTRUCTIONS (MAR 1987 SASCD-SQ)

For all of the operating and maintenance instructions which are required in the contract specifications, the Contractor shall video tape these instructions as they are presented to the Government representatives. These tapes shall provide clear and understandable detailed instructions for all items required by the contract specifications. The tapes shall be prepared by an experienced video director/cameraman using good quality half-inch VHS color tape with correct sound equipment, lighting, and backdrop. The sound and picture quality shall be high and subject to approval by the Contracting Officer. The tapes are intended as followup training for other Government representatives at a later date. They must be suitable for this purpose. The Contractor shall be responsible for the contents of the instructions and shall verify that they are correct prior to taping. The Contractor may submit individual equipment manufacturer's instructional tape(s), provided they meet the above qualifications and cover the actual equipment that is installed. The tape(s) shall be for specific equipment identified by contents and contract name and number. The Contractor shall submit one copy of the tape(s) to the Contracting Officer for review and approval. Unacceptable tapes are to be corrected by the Contractor as indicated by the Contracting Officer at no additional cost to the Government.

(End of clause)

52.236-4017 SUBMITTAL OF MODIFICATION COST ESTIMATE PROPOSALS (MAR 1992 SAS)
(Ref. DFARS 52.236-7000)

When submittals of Cost Estimate Proposals are required for additions or deletions to work under this contract by modification, the Contractor shall use DA Form 5418-R titled "Cost Estimate Analysis" (see Attachment 1 to SECTION 00800). A separate assemblage will be prepared for submittal by each trade affected by the proposed work.
(End of clause)

52.246-12 INSPECTION OF CONSTRUCTION (AUG 1996)

(a) Definition. "Work" includes, but is not limited to, materials, workmanship, and manufacture and fabrication of components.

(b) The Contractor shall maintain an adequate inspection system and perform such inspections as will ensure that the work performed under the contract conforms to contract requirements. The Contractor shall maintain complete inspection records and make them available to the Government. All work shall be conducted under the general direction of the Contracting Officer and is subject to Government inspection and test at all places and at all reasonable times before acceptance to ensure strict compliance with the terms of the contract.

(c) Government inspections and tests are for the sole benefit of the Government and do not--

(1) Relieve the Contractor of responsibility for providing adequate quality control measures;

(2) Relieve the Contractor of responsibility for damage to or loss of the material before acceptance;

(3) Constitute or imply acceptance; or

(4) Affect the continuing rights of the Government after acceptance of the completed work under paragraph (i) of this section.

(d) The presence or absence of a Government inspector does not relieve the Contractor from any contract

requirement, nor is the inspector authorized to change any term or condition of the specification without the Contracting Officer's written authorization.

(e) The Contractor shall promptly furnish, at no increase in contract price, all facilities, labor, and material reasonably needed for performing such safe and convenient inspections and tests as may be required by the Contracting Officer. The Government may charge to the Contractor any additional cost of inspection or test when work is not ready at the time specified by the Contractor for inspection or test, or when prior rejection makes reinspection or retest necessary. The Government shall perform all inspections and tests in a manner that will not unnecessarily delay the work. Special, full size, and performance tests shall be performed as described in the contract.

(f) The Contractor shall, without charge, replace or correct work found by the Government not to conform to contract requirements, unless in the public interest the Government consents to accept the work with an appropriate adjustment in contract price. The Contractor shall promptly segregate and remove rejected material from the premises.

(g) If the Contractor does not promptly replace or correct rejected work, the Government may (1) by contract or otherwise, replace or correct the work and charge the cost to the Contractor or (2) terminate for default the Contractor's right to proceed.

(h) If, before acceptance of the entire work, the Government decides to examine already completed work by removing it or tearing it out, the Contractor, on request, shall promptly furnish all necessary facilities, labor, and material. If the work is found to be defective or nonconforming in any material respect due to the fault of the Contractor or its subcontractors, the Contractor shall defray the expenses of the examination and of satisfactory reconstruction. However, if the work is found to meet contract requirements, the Contracting Officer shall make an equitable adjustment for the additional services involved in the examination and reconstruction, including, if completion of the work was thereby delayed, an extension of time.

(i) Unless otherwise specified in the contract, the Government shall accept, as promptly as practicable after completion and inspection, all work required by the contract or that portion of the work the Contracting Officer determines can be accepted separately. Acceptance shall be final and conclusive except for latent defects, fraud, gross mistakes amounting to fraud, or the Government's rights under any warranty or guarantee.

(End of clause)

52.246-21 WARRANTY OF CONSTRUCTION (MAR 1994)

(a) In addition to any other warranties in this contract, the Contractor warrants, except as provided in paragraph (i) of this clause, that work performed under this contract conforms to the contract requirements and is free of any defect in equipment, material, or design furnished, or workmanship performed by the Contractor or any subcontractor or supplier at any tier.

(b) This warranty shall continue for a period of 1 year from the date of final acceptance of the work. If the Government takes possession of any part of the work before final acceptance, this warranty shall continue for a period of 1 year from the date the Government takes possession.

(c) The Contractor shall remedy at the Contractor's expense any failure to conform, or any defect. In addition, the Contractor shall remedy at the Contractor's expense any damage to Government-owned or controlled real or personal property, when that damage is the result of--

(1) The Contractor's failure to conform to contract requirements; or

(2) Any defect of equipment, material, workmanship, or design furnished.

(d) The Contractor shall restore any work damaged in fulfilling the terms and conditions of this clause. The Contractor's warranty with respect to work repaired or replaced will run for 1 year from the date of repair or replacement.

(e) The Contracting Officer shall notify the Contractor, in writing, within a reasonable time after the discovery of any failure, defect, or damage.

(f) If the Contractor fails to remedy any failure, defect, or damage within a reasonable time after receipt of notice, the Government shall have the right to replace, repair, or otherwise remedy the failure, defect, or damage at the Contractor's expense.
(g) With respect to all warranties, express or implied, from subcontractors, manufacturers, or suppliers for work performed and materials furnished under this contract, the Contractor shall--

(1) Obtain all warranties that would be given in normal commercial practice;

(2) Require all warranties to be executed, in writing, for the benefit of the Government, if directed by the Contracting Officer; and

(3) Enforce all warranties for the benefit of the Government, if directed by the Contracting Officer.

(h) In the event the Contractor's warranty under paragraph (b) of this clause has expired, the Government may bring suit at its expense to enforce a subcontractor's, manufacturer's, or supplier's warranty.

(i) Unless a defect is caused by the negligence of the Contractor or subcontractor or supplier at any tier, the Contractor shall not be liable for the repair of any defects of material or design furnished by the Government nor for the repair of any damage that results from any defect in Government-furnished material or design.

(j) This warranty shall not limit the Government's rights under the Inspection and Acceptance clause of this contract with respect to latent defects, gross mistakes, or fraud.

(End of clause)

52.249-4001 TIME EXTENSIONS FOR UNUSUALLY SEVERE WEATHER (APR 1991 OCE)
(Ref. FAR 52.249-10)

(a) This provision specifies the procedure for the determination of time extensions for unusually severe weather in accordance with the contract clause entitled DEFAULT (FIXED-PRICE CONSTRUCTION). In order for the Contracting Officer to award a time extension under this clause, the following conditions must be satisfied:
(1) The weather experienced at the project site during the contract period must be found to be unusually severe, that is, more severe than the adverse weather anticipated for the project location during any given month.
(2) The unusually severe weather must actually cause a delay to the completion of the project. The delay must be beyond the control and without the fault or negligence of the Contractor.
(b) The following schedule of monthly anticipated adverse weather delays is based on National Oceanic and Atmospheric Administration (NOAA) or similar data for the project location and will constitute the base line for monthly weather time evaluations. The Contractor's progress schedule must reflect these anticipated adverse weather delays in all weather dependent activities.

MONTHLY ANTICIPATED ADVERSE WEATHER DELAY
WORKDAYS BASED ON 5-DAY WORK WEEK

JAN	FEB	MAR	APR	MAY	JUN	JUL	AUG	SEP	OCT	NOV	DEC

6 6 5 4 5 7 9 8 5 2 3 6

(c) Upon acknowledgment of the Notice to Proceed and continuing through-out the contract, the Contractor will record on the daily Contractor Quality Control report the occurrence of adverse weather and resultant impact to normally scheduled work. Actual adverse weather delay days must prevent work on critical activities for 50 percent or more of the Contractor's scheduled workday. The number of actual adverse weather delay days shall include days impacted by actual adverse weather (even if adverse weather occurred in previous month), be calculated chronologically from the first to the last day in each month, and be recorded as full days. If the number of actual adverse weather delay days exceeds the number of days anticipated in paragraph (b) above, the Contracting Officer will convert any qualifying delays to calendar days, giving full consideration for equivalent fair weather workdays, and issue a modification in accordance with the contract clause entitled DEFAULT (FIXED PRICE CONSTRUCTION).
(End of clause)

52.249-5000 BASIS FOR SETTLEMENT OF PROPOSALS - EFARS

Actual costs will be used to determine equipment costs for a settlement proposal submitted on the total cost basis under FAR 49.206-2(b). In evaluating a terminations settlement proposal using the total cost basis, the following principles will be applied to determine allowable equipment costs:

(1) Actual costs for each piece of equipment, or groups of similar serial or series equipment, need not be available in the contractor's accounting records to determine total actual equipment costs.

(2)If equipment costs have been allocated to a contract using predetermined rates , those charges will be adjusted to actual costs.

(3) Recorded job costs adjusted for unallowable expenses will be used to determine equipment operating expenses.

(4) Ownership costs (depreciation) will be determined using the contractor's depreciation schedule (subject to the provisions of FAR 31.205-11).

(5) License, taxes, storage and insurance costs are normally recovered as an indirect expense and unless the contractor charges these costs directly to contracts, they will be recovered through the indirect expense rate.
(End of Clause)

ATTACHMENT 1 TO SECTION 00800

LIST OF ATTACHMENTS

1. Contract Drawings:

   File No. 211-20-01, Sheets 1 through 48

2. Rates of Wages:

3. Formats:

   Air Force Project Sign

   Corps of Engineers Logo

   Accident Prevention Plan (Ref. FAR 52.236-13 and EM 385-1-1)

   Construction Quality Control Report

   Weekly Temporary Electrical Inspection

4. Minimum Standard for Temporary Electrical Service (Ref. FAR 52.236-14)

5. Forms:

   SAS Form 9 - Activity Hazard Analysis

   SAD Form 1666a-R - Safety Checklist for Crawler, Truck & Wheel Mounted Cranes

   SAD Form 1666b-R - Safety Checklist for Portal, Tower, and Pillar Cranes

   SAD Form 1666c-R - Safety Checklist for Rigging

   SAD Form 1666d-R - Safety Checklist for Motor Vehicles, Trailers and Trucks

   SAD Form 1666e-R - Safety Checklist for Crawler Tractors and Dozers

   SAD Form 1666f-R - Safety Checklist for Scrapers, Motor Graders, and Other Mobile Equipment

   SAD Form 1666g-R - Safety Checklist for Material Hoists

   SAD Form 1666h-R - Safety Checklist for Earth Drilling Equipment

   ENG Form 4025 - Transmittal of Shop Drawings, Equipment Data, Material Samples, or Manufacturer's Certificates of Compliance

   DA Form 5418-R - Cost Estimate Analysis

   Standard Form LLL-A - Disclosure of Lobbying Activities

   Real Property Inventory

   Fort Stewart and Hunter Army Airfield Borrow Pit Excavation Permit

General Decision Number: GA030036 07/09/2004 GA36

Superseded General Decision Number: GA020036

State: Georgia

Construction Types: Building

Counties: Appling, Atkinson, Bacon, Brantley, Bulloch, Burke, Candler, Charlton, Clinch, Echols, Emanuel, Evans, Jeff Davis, Jefferson, Jenkins, Johnson, Laurens, Liberty, Long, McIntosh, Montgomery, Pierce, Screven, Tattnall, Telfair, Toombs, Treutlen, Ware, Wayne and Wheeler Counties in Georgia.

BUILDING CONSTRUCTION PROJECTS (does not include residential construction consisting of single family homes and apartments up to and including 4 stories)

Modification Number	Publication Date
0	06/13/2003
1	07/09/2004

CARP0144-002 12/01/2000

JOHNSON, LAURENS, MONTGOMERY, TELFAIR, TREUTLEN AND WHEELER COUNTIES:

	Rates	Fringes
Millwright	$ 17.50	5.06

---

* CARP0256-001 01/01/2004

BULLOCH, CANDLER, EVANS, LIBERTY, LONG, SCREVEN, TATTNALL AND TOOMBS COUNTIES:

	Rates	Fringes
Millwright	$ 17.60	6.02

FOOTNOTE: Work with creosote materials, acid or other strong chemicals; work with cofferdams & tunnels; swinging scaffolds & boatswain chair, 25 ft. or higher; chimneys, silos or towers which are independent of the building and which are 25 ft. or higher; clip forms; erecting & dismantling scaffolds 35 ft. or higher; operation of radial arm saws: $.50 per hour additional. If handrails and/or safety belts are provided by the contractor, the premium pay will not be applicable.

CARP0283-001 10/01/1999

BURKE, EMANUEL, JEFFERSON AND JENKINS COUNTIES:

	Rates	Fringes
Millwright	$ 16.40	4.13

CARP0865-004 09/16/2001

APPLING, ATKINSON, BACON AND BRANTLEY COUNTIES; CHARLTON COUNTY (does not include the city of Folkston); CLINCH, ECHOLS, JEFF DAVIS, MCINTOSH, PIERCE, WARE AND WAYNE COUNTIES:

	Rates	Fringes
Millwright		
General contracts		
$3,000,000 & over	$ 18.40	4.52
General contracts under $3,000,000	$ 17.40	4.49

CARP2411-001 06/19/2000

CHARLTON COUNTY (City of Folkston):

	Rates	Fringes
Millwright	$ 16.65	4.19

SUGA2000-002 05/10/2000

	Rates	Fringes
Bricklayer	$ 15.00	
Cabinet Installer	$ 8.83	
Carpenter (does not include batt insulation or drywall hanging)	$ 13.31	
Cement Mason/Concrete Finisher	$ 12.04	
Drywall Hanger	$ 13.64	
Electrician	$ 12.29	
HVAC Mechanic (does not include HVAC duct work)	$ 11.94	
Insulator - Batt	$ 7.00	
Ironworker, Structural	$ 10.13	
Laborer	$ 7.95	
Mason Tender	$ 8.00	
Painter, Brush (does not include drywall finishing)	$ 12.44	
Pipefitter (does not include HVAC piping)	$ 15.27	3.20
Plumber (does not include HVAC piping)	$ 13.69	
Power equipment operators:		
Backhoe	$ 11.97	
Roller	$ 8.54	
Roofer	$ 10.00	
Sheet Metal Worker (includes HVAC duct work)	$ 10.45	
Truck Driver	$ 8.70	

WELDERS - Receive rate prescribed for craft performing

operation to which welding is incidental.
==========

Unlisted classifications needed for work not included within the scope of the classifications listed may be added after award only as provided in the labor standards contract clauses (29CFR 5.5 (a) (1) (ii)).

In the listing above, the "SU" designation means that rates listed under the identifier do not reflect collectively bargained wage and fringe benefit rates. Other designations indicate unions whose rates have been determined to be prevailing.

WAGE DETERMINATION APPEALS PROCESS

1.) Has there been an initial decision in the matter? This can be:

* an existing published wage determination
* a survey underlying a wage determination
* a Wage and Hour Division letter setting forth a position on a wage determination matter
* a conformance (additional classification and rate) ruling

On survey related matters, initial contact, including requests for summaries of surveys, should be with the Wage and Hour Regional Office for the area in which the survey was conducted because those Regional Offices have responsibility for the Davis-Bacon survey program. If the response from this initial contact is not satisfactory, then the process described in 2.) and 3.) should be followed.

With regard to any other matter not yet ripe for the formal process described here, initial contact should be with the Branch of Construction Wage Determinations. Write to:

Branch of Construction Wage Determinations

Wage and Hour Division

U.S. Department of Labor

200 Constitution Avenue, N.W.

Washington, DC 20210

2.) If the answer to the question in 1.) is yes, then an interested party (those affected by the action) can request review and reconsideration from the Wage and Hour Administrator (See 29 CFR Part 1.8 and 29 CFR Part 7). Write to:

Wage and Hour Administrator

U.S. Department of Labor

200 Constitution Avenue, N.W.

Washington, DC 20210

The request should be accompanied by a full statement of the interested party's position and by any information (wage payment data, project description, area practice material, etc.) that the requestor considers relevant to the issue.

3.) If the decision of the Administrator is not favorable, an interested party may appeal directly to the Administrative Review Board (formerly the Wage Appeals Board). Write to:

Administrative Review Board

U.S. Department of Labor

200 Constitution Avenue, N.W.

Washington, DC 20210

4.) All decisions by the Administrative Review Board are final.

==========

END OF GENERAL DECISION

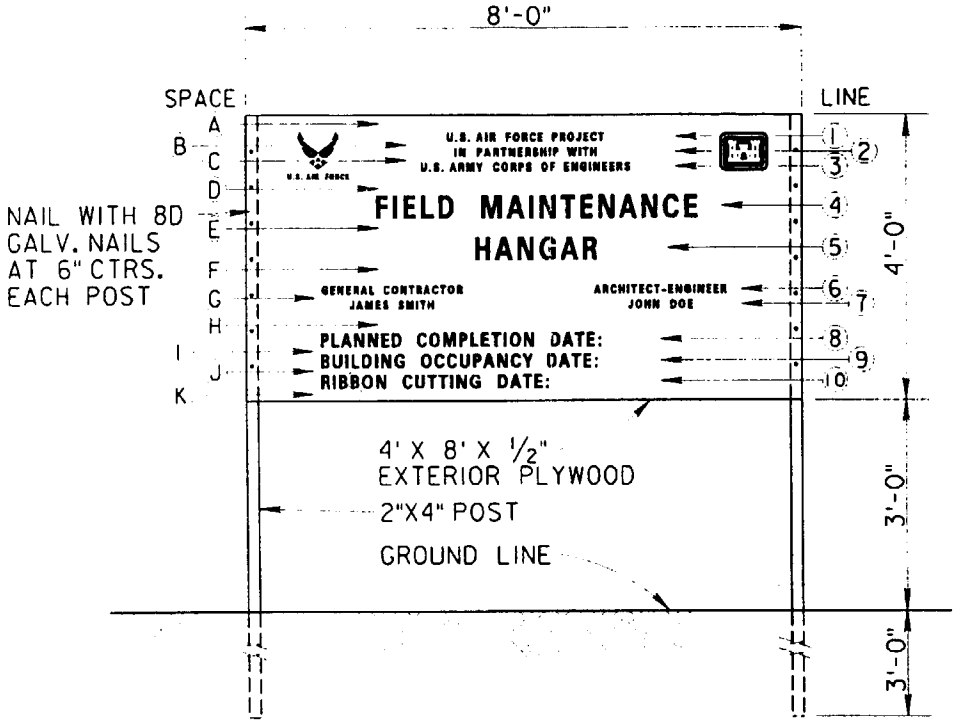

FRONT VIEW

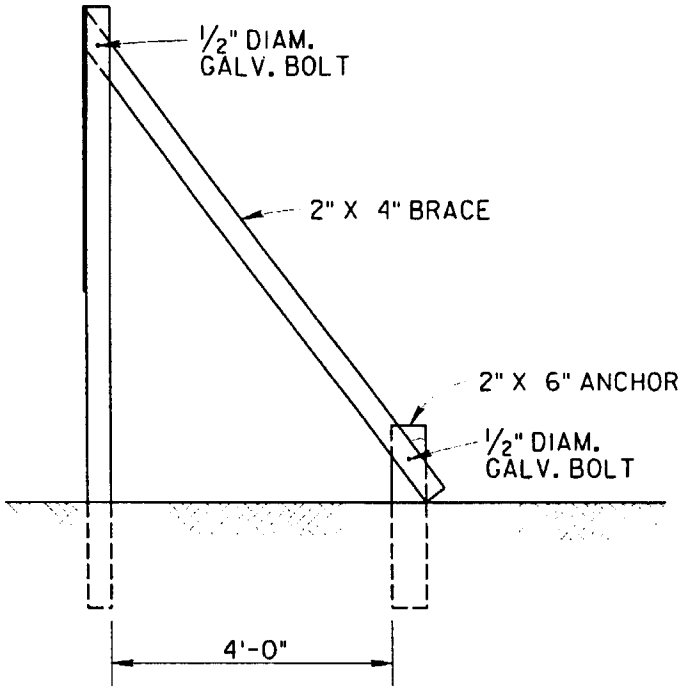

END VIEW

U.S. AIR FORCE PROJECT SIGN DETAILS

NOTES:

1. POSTS SHALL BE S4S.
2. PLYWOOD SHALL BE EXTERIOR TYPE, A-C GRADE.
3. BEFORE PAINTING, SURFACE SHALL BE CLEAN, DRY, FREE OF GREASE AND SANDED.
4. PAINT WITH ONE EXTERIOR OIL PRIME COAT AND EXTERIOR TYPE ALKYD, CONFORMING TO MASTER PAINTERS INSTITUTE MPI-9, MPI GLOSS LEVEL 6. COLOR SHALL MATCH SHERWIN WILLIAMS SW 2175.
5. ALL LETTERING SHALL BE EXTERIOR TYPE ALKYD. COLOR SHALL MATCH SHERWIN WILLIAMS SW 1900.
6. DECALOMANIA FOR CORPS OF ENGINEERS INSIGNIA AND U.S. AIR FORCE EMBLEM WILL BE FURNISHED BY THE CONTRACTING OFFICER FOR INSTALLATION BY THE CONTRACTOR.
7. ALL EXPOSED WOOD (POSTS, SUPPORTS, BACK, ETC.) SHALL BE PAINTED THE SAME BACKGROUND COLOR AS THE SIGN.
8. LETTERING STYLE SHALL BE EITHER HELIOS EXTRA BOLD CONDENSED, HELIOS BOLD II, HELVETICA BLACK ROMAN, OR HELVETICA BOLD ROMAN.

SCHEDULE

SPACE	HEIGHT	LINE	DESCRIPTION	LETTER HEIGHT	STROKE
A	3"	1	U.S. AIR FORCE PROJECT	1.5"	3/16"
B	1"	2	IN PARTNERSHIP WITH	1.5"	3/16"
C	1"	3	U.S. ARMY CORPS OF ENGINEERS	1.5"	3/16"
D	4"	4	PROJECT NAME	4"	1/2"
E	3"	5	PROJECT NAME CONT'D (IF REQ'D)	4"	1/2"
F	4"	6	GENERAL CONTRACTOR/A-E	1.5"	3/16"
G	1"	7	GENERAL CONTRACTOR/A-E	1.5"	3/16"
H	4"	8	PLANNED COMPLETION DATE	2.5"	1/4"
I	1"	9	BUILDING OCCUPANCY DATE	2.5"	1/4"
J	1"	10	RIBBON CUTTING DATE	2.5"	1/4"
K	2"				

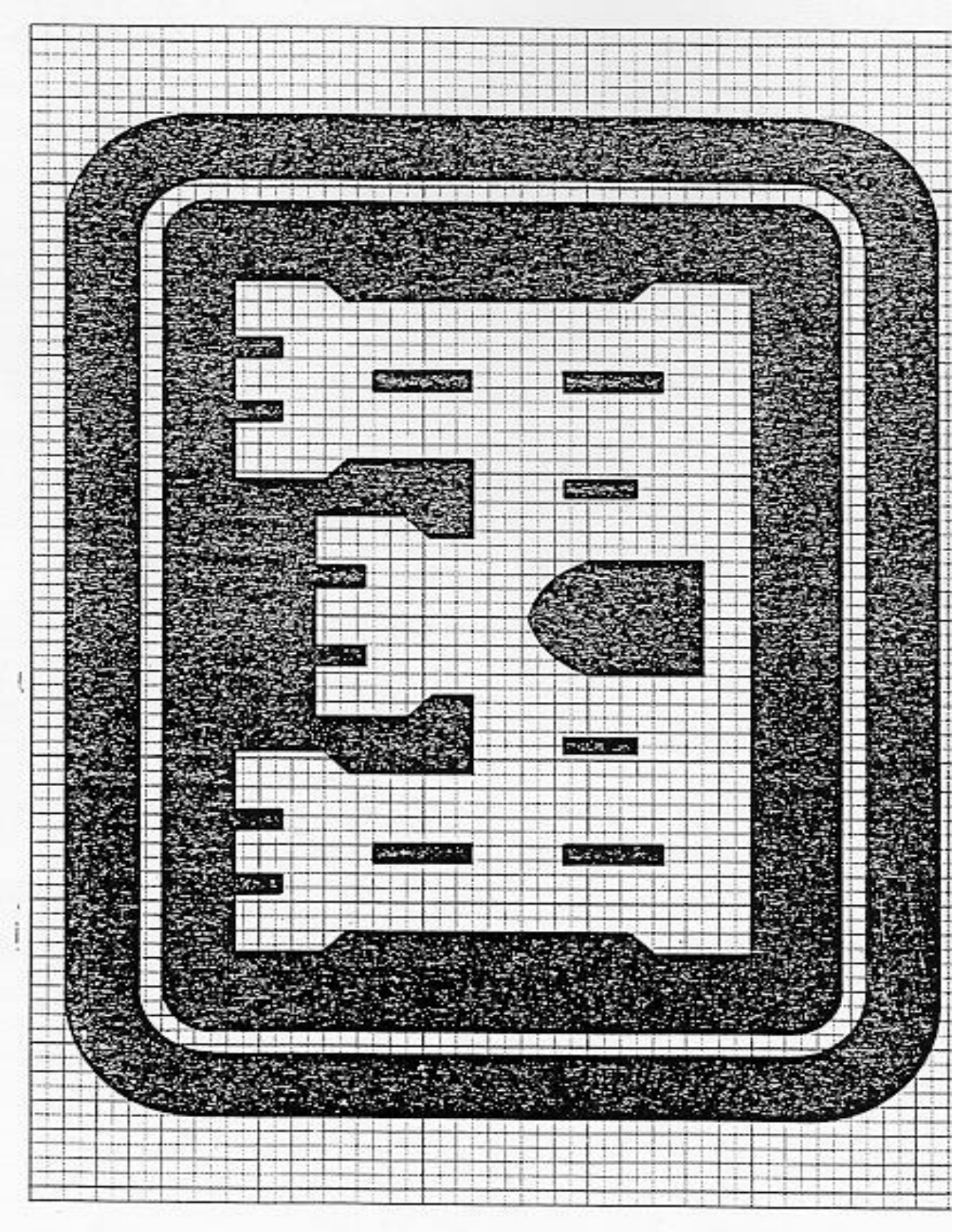

CORPS OF ENGINEERS LOGO
HALF SIZE

Last revised 9 May 97

FORMAT
(Ref. FAR 52.236-13 and EM 385-1-1 dated 3 Sep 96)
ACCIDENT PREVENTION PLAN

MINIMUM BASIC OUTLINE FOR ACCIDENT PREVENTION PLAN

An accident prevention plan is, in essence, a safety and health policy and program document. The following areas are typically addressed in an accident prevention plan, but a plan shall be job specific and shall also address any unusual or unique aspects of the project or activity for which it is written. The accident prevention plan shall interface with the employer's overall safety and health program. Any portions of the overall safety and health program that are referenced in the accident prevention plan shall be included as appropriate.

1. SIGNATURE SHEET. Title, signature, and phone number of the following:

a. Plan preparer (corporate safety staff person, QC);

b. Plan approval, e.g., owner, company president, regional vice president (HTRW activities require approval of a Certified Industrial Hygienist (or qualified Industrial Hygiene personnel for in-house USACE activities; a Certified Safety Professional (or qualified USACE safety personnel for in-house work) may approve the plan for operations involving UST removal where contaminants are known to be petroleum, oils, or lubricants);

c. Plan concurrence (provide concurrence of other applicable corporate and project personnel (contractor)), e.g., Corporate Chief of Operations, Corporate Chief of Safety, Corporate Industrial Hygienist, project manager or superintendent, project safety professional, project QC. The plan will be developed by qualified personnel (plan preparer) and will be signed by a competent person (plan concurrence) and a representative of the prime contractor's project management team (plan approval).

2. BACKGROUND INFORMATION. List the following:

a. Contractor;

b. Contract number;

c. Project name;

d. Brief project description, description of work to be performed, and location (map);

e. Contractor accident experience (provide information such as EMR, OSHA 200 Forms, corporate safety trend analyses);

f. Listing of phases of work and hazardous activities requiring activity hazards analyses.

3. STATEMENT OF SAFETY AND HEALTH POLICY. (In addition to the corporate policy statement, a copy of the corporate safety program may provide a

significant portion of the information required by the accident prevention plan.)

4. RESPONSIBILITIES AND LINES OF AUTHORITIES.

a. Identification and accountability of personnel responsible for safety - at both corporate and project level (contracts specifically requiring safety or industrial hygiene personnel should include a copy of their resume - the District Safety and Occupational Health Office will review the qualifications for acceptance). For items in EM 385-1-1 which require the use of a competent person or a qualified person, the contractor is to maintain documentation demonstrating the competence or qualification of that individual.

b. Lines of authority

5. SUBCONTRACTORS AND SUPPLIERS. Provide the following:

a. Identification of subcontractors and suppliers (if known);

b. Means for controlling and coordinating subcontractors and suppliers;

c. Safety responsibilities of subcontractors and suppliers.

6. TRAINING.

a. List subjects to be discussed with employees in safety indoctrination.

b. List mandatory training and certifications which are applicable to this project (e. g., explosive actuated tools, confined space entry, crane operator, diver, vehicle operator, HAZWOPER training and certification, personal protective equipment) and any requirements for periodic retraining/recertification.

c. Identify requirements for emergency response training.

d. Outline requirements (who attends, when given, who will conduct etc.) for supervisory and employee safety meetings.

e. Identify location at the project site where the records will be maintained.

7. SAFETY AND HEALTH INSPECTIONS. Provide details on:

a. Who will conduct safety inspections (e.g., project manager, safety professional, QC, supervisors, employees, etc.), when inspections will be conducted, how the inspections will be recorded, deficiency tracking system, follow-up procedures, etc;

b. Any external inspections/certifications which may be required (e.g., Coast Guard).

8. SAFETY AND HEALTH EXPECTATIONS, INCENTIVE PROGRAMS, AND COMPLIANCE.

a. The company's written safety program goals, objectives, and accident experience goals for this contract should be provided.

b. A brief description of the company's safety incentive programs (if any) should be provided.

c. Policies and procedures regarding noncompliance with safety requirements (to include disciplinary actions for violation of safety requirements) should be identified.

d. Provide written company procedures for holding managers and supervisors accountable for safety.

9. ACCIDENT REPORTING. The contractor shall identify who shall complete the following, how, and when:

a. Exposure data (man-hours worked);

b. Accident investigations, reports and logs;

c. Immediate notification of major accidents.

10. MEDICAL SUPPORT. Outline on-site medical support and off-site medical arrangements.

11. PERSONAL PROTECTIVE EQUIPMENT. Outline procedures (who, when, how) for conducting hazard assessments and written certifications for use of personal protective equipment.

12. PLANS (PROGRAMS, PROCEDURES) REQUIRED BY THE SAFETY MANUAL (as applicable).

a. Hazard communication program (01.B.04);

b. Emergency response plans:
- procedures and tests (01.E.01)
- spill plans (01.E.01, 06.A.02)
- fire fighting plan (01.E.01, 19.A.04)
- posting of emergency telephone numbers (01.E.04)
- wildfire prevention plan (09.K.01)
- man overboard/abandon ship (19.A.04)

c. Layout plans (04.A.01);

d. Respiratory protection plan (05.E.01);

e. Health hazard control program (06.A.02);

f. Lead abatement plan (06.B.05 & specifications);

g. Asbestos abatement plan (06.B.05 & specifications);

h. Abrasive blasting (06.H.01);

i. Confined space (06.1);

j. Hazardous energy control plan (12.A.07);

k. Critical lift procedures (16.C.17);

l. Contingency plan for severe weather (19.A.03);

m. Access and haul road plan (22.1.10);

n. Demolition plan (engineering and asbestos surveys) (23.A.01);

o. Emergency rescue (tunneling) (26.A.05);

p. Underground construction fire prevention and protection plan (26.D.01);

q. Compressed air plan (26.1.01);

r. Formwork and shoring erection and removal plans (27.B.02);

s. Lift slab plans (27.D.01);

t. SHP and SSHP (for HTRW work an SSHP must be submitted and shall contain all information required by the accident prevention plan - two documents are not required (28.B.01);

u. Blasting plan (29.A.01);

v. Diving plan (30.A.13);

w. Plan for prevention of alcohol and drug abuse (Defense Federal Acquisition Regulation Supplement Subpart 252.223-7004, Drug-Free Work Force).

13. The Contractor shall provide information on how they will meet the requirements of major sections of EM 385-1-1 in the accident prevention plan. Particular attention shall be paid to excavations, scaffolding, medical and first aid requirements, sanitation, personal protective equipment, fire prevention, machinery and mechanized equipment, electrical safety, public safety requirements, and chemical, physical agent, and biological occupational exposure prevention requirements. Detailed site-specific hazards and controls shall be provided in the activity hazard analysis for each phase of the operation. Site-specific hazards are those hazards which would be reasonably be anticipated to occur on the construction site of concern and will be identified through analysis of the activities to be performed. The controls are measures which will be implemented by the contractor to eliminate or reduce each hazard to an acceptable level.

F O R M A T

CONTRACTOR'S NAME
(Address)

CONSTRUCTION QUALITY CONTROL REPORT

Date: _____ Report No. _____

Contract No.: _____

Description and Location of Work: _____

WEATHER: (Clear)(P. Cloudy)(Cloudy); Temperature:___Min,___Max;
Rainfall ___Inches

Contractor/Subcontractors and Area of Responsibility
a._____
b._____
c._____
d._____
e._____
f._____
g._____
h._____

1. Work Performed Today:

(Indicate location and description of work performed. Refer to work performed by prime and/or subcontractors by letter in table above.)

_____

2. Results of Control Activities:

(Indicate whether: P-Preparatory, I-Initial, or F-Followup and include satisfactory work completed or deficiencies with action to be taken.)

_____

3. Test Required by Plans and/or Specifications Performed and Results of Tests:

_____

4. Monitoring of Materials and Equipment:

---

5. Offsite Surveillance Activities:

---

6. Job Safety:

(Daily comment required.)

---

7. Remarks:

a. (Cover any conflicts in plans, specifications or instructions.)

b. (Action taken in review of submittal.)

c. (Verbal instructions received.)

_____
Inspector

CONTRACTOR'S VERIFICATION:

The above report is complete and correct and all material and equipment used and work performed during this reporting period are in compliance with the contract plans and specifications except as noted above.

_____
Contractor's Approved
Authorized Representative

WEEKLY TEMPORARY ELECTRICAL INSPECTION

Week ending _____

Contract No. _____

Contract Description _____

The following items were inspected in accordance with requirements in National Electrical Code and Corps of Engineers Safety and Health Requirements Manual, EM 385-1-1.

1. Wire (size, type, condition).

2. Systems and devices (polarity, continuity of ground, resistance to ground).

3. Resistance of ground rods (25 OHMS) measured and recorded.

4. Check GFI for 15/20 amp 120 volt circuits.

5. Plugs and receptacles (type, NEMA rating).

6. Circuit breakers and disconnect (size, type, weatherproof).

7. Extension cords (type, UL listed, insulation condition, splices, location).

8. Open wiring on insulators, nonmetallic sheathed cable, outside clearance (600 volts or less), Festoon lighting (as applicable).

_____

Signature Electrician/Electrical Engineer

MINIMUM STANDARD FOR TEMPORARY ELECTRICAL SERVICE

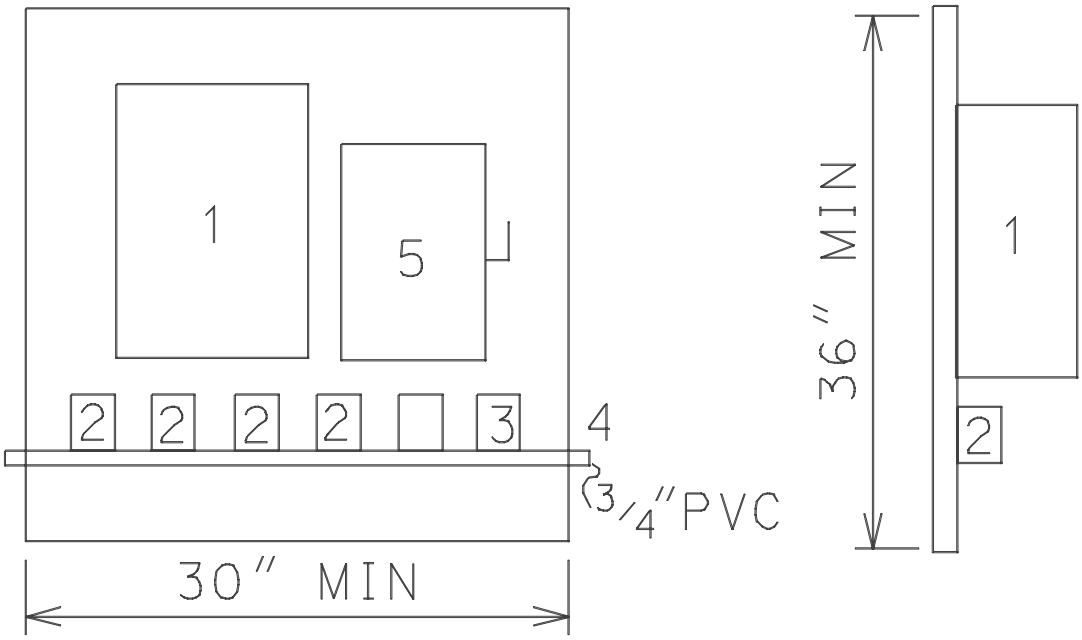

(DIMENSIONS ARE APPROXIMATE)

A. The backboard for temporary service shall consist of not less than 1/2 inch plywood of exterior grade.

B. Numbers above correspond to the item below:

Item 1 - NEMA 3R circuit breaker type panelboard. This panelboard shall consist of 1 two-pole 60 amp main circuit breaker, 4* one pole 20 AMP branch circuit breakers, and 1* two pole 20 AMP branch circuit breaker. Breakers shall meet Federal Specifications Standards for Class 1A breakers and shall be plug-in type. (*Number of breakers to be adjusted to suit the job requirements.)

Item 2 - Duplex grounding type convenience outlets in standard utility type outlet boxes with covers, meeting the NEC and NEMA requirements for wet locations. Connections to the branch circuit breakers shall be grounded by two conductors #12 NMC cable.

Item 3 – (Optional) A single three-conductor grounding type outlet rated for 250 volt service meeting the NEC and NEMA requirements for wet locations. Connections from this outlet to the two pole breaker shall be by two conductor grounded type NMC cable.

Item 4 - 3/4 inch PVC. This shall be used to support extension cords.

Item 5 – NEMA 3R service disconnect safety switch – 60 amp minimum.

C. The panelboard shall be grounded by #6 copper wire connected to a 3/4 inch by 10-foot long ground rod.

D. Service to the panel shall consist of three copper conductor #6 minimum service entrance cable. This cable may enter the top or side of the panelboard.

E. Periodic inspections of systems and devices will be made by the Contractor at intervals not to exceed 1 week, and a report will be submitted indicating the results.

F. All receptacle outlets that provide temporary electrical power during construction, remodeling, maintenance, repair, or demolition shall have ground-fault circuit-interrupter (CFCI) protection for personnel. GFCI protection shall be provided on all circuits serving portable electric hand tools or semi-portable electric power tools (such as block/brick saws, table saws, air compressors, welding machines, and drill presses). See EM 385-1-1 for exceptions.

G. Per EM 385-1-1 all temporary power distribution systems shall be submitted to the field office before installation.

ACTIVITY HAZARD ANALYSIS

1. Phase of Construction		
2. Location	3. Contract No.	4. Project
5. Prime Contractor	6. Date of Preparatory	7. Estimated Start Date
Potential Safety Hazard	Procedure to Control Hazard	
8. Contractor's Representative (signature)	9.	

SAS Form 9
1 Jan 82

SAFETY CHECKLIST FOR CRAWLER, TRUCK & WHEEL MOUNTED CRANES

Contract # and title:	
Equipment name & number: owned or leased?	
Contractor:	Subcontractor:
Contract Inspector:	Date inspected:

	Yes	No	N/A
1. Unless the manufacture has specified an on-rubber rating, outriggers will be fully extended and down? (16.D.10)			
2. Are lattice boom cranes equipped with a boom angle indicator, load indicating device, or a load moment indicator? (16.D.01)			
3. Are lattice boom and hydraulic cranes equipped with a means for the operator to visually determine levelness? (16.D.02)			
4. Are lattice boom and hydraulic cranes, except articulating booms cranes, equipped with drum rotation indicators located for use for the operator? (16.D.03)			
5. Are lattice boom and hydraulic mobile cranes equipped with a boom angle or radius indicator within the operator’s view? (16.D.04)			
6. Are lattice boom cranes, with exception of duty cycle cranes, equipped with an anti-two blocking device? (16.D.05)			
7. When duty cycle machines are required to make a non-duty lift, is the crane equipped with an international orange warning device and is a signal person present? (16.D 05)			
8. Are the following with the crane at all times: (16.C.02) a. the manufacturer’s operating manual? b. the load rating chart? c. the crane’s log book documenting use, maintenance, inspections and tests? d. operating manual for crane operator aids used on the crane.			

	Yes	No	N/A
9. Are the following on the project site: a. completed periodic inspection report prior to initial work? (16.C.12) b. pre-operational checklist used for daily inspection? (16.C.12) c. written reports of the operational performance test? (16.C.13) d. written reports of the load performance test? (16.C.13)			
10. Are all operators physically qualified to perform work? (16.C.05)			
11. Are all operators qualified by written and practical exam or by appropriate licensing agency for the type crane they are to operate? (16.C.05)			
12. Is the crane designed and constructed IAW the standards listed in Table 16-1? (16.C.06)			
13. Is a hazard analysis for set-up and set-down available? (16.C.08)			
14. Are accessible areas within the swing radius of the rear of the crane barricaded? (16.C.09)			
15. Are there at least 3 wraps of cable on the drum? (16.C.10)			
16. Are the hoisting ropes installed IAW the manufacturer’s recommendations? (16.C.10)			
17. Are critical lift plans available? (16.C.18)			
18. Are minimum clearance distance for high voltage lines posted at the operator’s position? (11.E.04)			
19. Do older lattice boom cranes with anti-two block warning devices in lieu of anti-two block prevention devices have a written exemption? (16.D.05)			
20. Is the slow moving emblem used on all vehicles which by design move at 25 MPH or less on public roads? (08.A.04)			
21. Are all vehicles which will be parked or moving slower than normal traffic on haul roads equipped with a yellow flashing light or flasher visible from all directions? (16.A.13)			

	Yes	No	N/A
22. Is all equipment to be operated on public roads provided with: (16A.07) a. headlights? b. brake lights? c. taillights? d. back-up lights? e. front and rear turn signals?			
23. Are seat and seat belts provided for the operator and each rider on equipment? (16.A.07 and 16.B.08)			
24. Is all equipment with windshields equipped with powered wipers and defogging or defrosting devices? (16.A.07)			
25. Is the glass in the windshield or other windows clear and unbroken to provide adequate protection and visiblity for the operator? (16.A.07, 16.B.10)			
26. Is all equipment equipped with adequate service brake system and emergency brake system? (16.A.18)			
27. Are areas on equipment where employees walk or climb equipped with platforms, footwalks, steps, handholds, guardrails, toeboards and non-slip surfaces? (16.B.03)			
28. Is all self propelled equipment equipped with automatic, audible, reverse signal alarms? (16.B.01)			
29. Is there a record of manufacturer’s approval of any modification of equipment which affects its capacity or safe operation? (16.A.18)			
30. Are truck and crawler cranes attached to a barge or pontoon by a slack tiedown system? (16.F.06)			
31. Have the following conditions been met for land cranes mounted on barges or pontoons: (16.F.04) a. Have load ratings been modified to reflect the increased loading from list, trim, wave, and wind action? b. Are all deck surfaces above the water? c. Is the entire bottom area of the barge or pontoon submerged? d. Are tie downs available? e. Are cranes blocked and secured?			
32. Are all belts, gears, shafts, spindles, drums, flywheels, or other rotating parts of equipment guarded where is a potential for exposure to workers? (16.B.03)			

	Yes	No	N/A
33. Is the area where the crane is to work level, firm and secured? (16.A.10)			
34. Is a dry chemical or carbon dioxide fire extinguisher rated at least 5-B:C on the crane? (16.A.26)			
35. Are trucks, for truck mounted cranes, equipped with a working reverse signal alarm? (16.B.01)			
36. Is a signal person provided where there is danger from swinging loads, buckets, booms, etc.? (16.B.13)			
37. Is there adequate clearance from overhead structures and electrical sources for the crane to be operated safely? (16.C.09)			
38. Is there adequate lighting for night operations? (16.C.19)			
39. Has the the boom stop test on cable-supported booms been performed? (16.D.06)			
40. Is the boom disenaging device functioning as required? (16.D.06)			
41. Has all rigging and wire rope been inspected? (Section 15)			
Remarks:(Enter actions taken for all “no” answers.)			
Contractor inspector signature			
Contractor QC/safety officer/project manager signature			

SAFETY CHECKLIST FOR PORTAL, TOWER, AND PILLAR CRANES

Contract # and Title:			
Equipment name & number: owned or leased?			
Contractor:	Subcontractor:		
Contract Inspector:	Date Inspected:		
	Yes	No	N/A
1. Are the following available: (16.E.02) a. written erection instructions? b. listing of the weight of each component? c. an activity hazard analysis for the erection? d. does the activity hazard analysis contain (1.) location of crane and adjacent structures? (2.) foundation design and construction requirements? (3.) clearance and bracing requirements?			
2. Is there a boom angle indicator within the operator's view? (16.E.04)			
3. Are luffing jib cranes equipped with: (16.E.05) a. shock absorbing jib stops? b. jib hoist limit switch? c. jib angle indicator visible to operator?			
4. If used, do rail clamps have slack between the point of attachment to the rail and the end fastened to the crane? (16E.06)			
5. Are the following with the crane at all times: (16.C.02) a. the manufacturer's operating manual? b. the load rating chart? c. the crane's log book documenting use, maintenance, inspections and tests? d. the operating manual for crane operational aids used on the crane?			

	Yes	No	N/A
6. Are the following on the project site: a. completed periodic inspection report prior to initial work? (16.C.12) b. pre-operational checklist used for daily inspections? (16.C.12) c. written reports of the operational performance tests? (16.C.13) d. written reports of the load performance tests? (16.C.13)			
7. Is every crane operator certified by a physician to be physically qualified to perform work? (16.C.05)			
8. Are all operators qualified by written and practical exam or by appropriate licensing agency for the type crane they are to operate? (16.C.05)			
9. Is the crane designed and constructed IAW the standards listed in Table 16-1? (16.C.05)			
10. Is a hazard analysis for set-up and set-down available? (16.C.08)			
11. Are there at least 3 wraps of cable on the drum? (16.C.10)			
12. Are the hoisting ropes installed IAW the manufacturer’s recommendations? (16.C.10)			
13. Is the a record of manufacturer’s approval of any modification of equipment which affects its capacity or safe operation? (16.A.07)			
5. Remarks: (Enter actions taken)			
Contractor inspector signature			
Contractor QC/safety officer/project manager signature			

SAFETY CHECKLIST FOR RIGGING

Contract # and title:			
Equipment name & number: owned or leased?			
Contractor	Subcontractor:		
Contractor inspector:	Date inspected:		
	Yes	No	N/A
1. Has all defective rigging been removed? (15.A.01)			
2. Is rigging stored properly? (15.A.01)			
3. Are running lines within 6.5’ of the ground or working level guarded? (15.A.03)			
4. Are all eye splices made in an approved manner with rope thimbles? (sling eyes excepted) (15.A.04)			
5. Are positive latching devices used to secure loads? (15.A.05)			
6. Are all custom lifting accessories marked to indicate their safe working loads? (15A.07)			
7. Are all custom designed lifting accessories proof-tested to 125% of their rated load? (15.A.07)			
8. Are the following conditions met for wire rope: (15.B.01-09) a. Are they free of rust or broken wires? b. Are defective ropes cut up or marked as unusable? c. Do rope clips attached with U-bolts have the U-bolts on the dead end or short end of the rope? d. Are protruding ends of strands in splices on slings and bridles covered or blunted? e. Except for eye splices in the end of wires and for all endless wire rope slings, are all wire ropes used in hoisting, lowering, or pulling loads one continuous piece, free of knots or splices?			

	Yes	No	N/A
f. Do all eye splices have at least 5 full tucks? g. If used, are wedge sockets fastening attached without attached the dead end of the wire rope to the live rope? h. Are they free of eyes or splices formed by wire rope clips or knots?			
9. Are the following conditions met for chain? (15.C.01-04) a. Are all chains alloyed? b. Do all coupling links or other attachments have rated capacities at least equal to that of the chain. c. Are makeshift fasteners restricted from use?			
10. Are the following conditions met for fiber rope:(15.D.01-07) a. Are all ropes protected from freezing, excessive heat or corrosive materials? b. Are all ropes protected from abrasion? c. Are splices made IAW manufacture's recommendations? d. Do all eye splices in manila rope contain at least 3 full tucks and do all short splices contain at least 6 full tucks(3 on each side of the centerline of the splice)? e. Do all splices in layed synthetic fiber rope contain at least 4 full tucks and do short splices contain at least 8 full tucks (4 on each side of the centerline of the splice)? f. Do the tails of fiber rope splices extend at least 6 rope diameters (for rope 1" diameter or greater) past the last full tuck? g. Are all eye splices large enough to provide an included angle of not greater than 60* at the splice when the eye is placed over the load or support?			
11. Are the following conditions met for all slings:(15.E.01-06) a. Is protection provided between the sling and sharp surfaces? b. Do all rope slings have minimum clear length of 40 times the diameter of component ropes between each end fitting or eye splice? c. Do all braided slings have a minimum clear length of 40 times the diameter of component ropes between each end fitting or eye splice?			

	Yes	No	N/A
d. Do all welded alloy steel chain slings have affixed permanent identification stating size, grade, rated capacity and manufacturer? e. Is each synthetic web sling marked or coded to identify its manufacturer, rated capacities for each type hitch and the type material?			
12. Are drums, sheaves, and pulley smooth and free of surface defects? (15.F.01)			
13. Is the ratio of the diameter of the rigging and the drum, block sheave or pulley thread diameter such that the rigging will adjust without excessive wear, deformation, or damage? (15F.02)			
14. Have all damaged drums, sheaves and pulleys been removed from service? (15.F.04)			
15. Are all connections, fittings, fastenings, and attachments of good quality, proper size and strength, and installed IAW manufacturer's recommendations? (15.F.05)			
16. Are all shackles and hooks sized properly? (15.F.06 & .07)			
17. Are hoisting hooks rated at 10 tons or greater provided with safe handling means? (15.F.07)			
18. Do all drums have sufficient rope capacity? (15.F.08)			
19. Is the drum end of the rope anchored by a clamp securely attached to the drum in a manner approved by the manufacturer? (15.F.08)			
20. Do grooved drums have the correct groove pitch for the diameter of the rope and is the groove depth correct? (15.F.08)			
21. Do the flanges on grooved drums project beyond the last layer of rope at a distance of either 2″ or twice the diameter of the rope, whichever is greater? (15.F.08)			
22. Do the flanges on ungrooved drums project beyond the last layer of rope a distance of either 2.5″ or twice the diameter of the rope, which ever is greater.			

	Yes	No	N/A
23. Are the sheaves compatible with the size of rope used and as specified by the manufacture? (15F.09)			
24. Are sheaves properly aligned, lubricated, and in good condition? (15.F.09)			
25. When rope is subject to riding or jumping off a sheave, are sheaves equipped with cablekeepers? 915.F.09)			
26. Are eye bolts loaded in the plane of the eye and at angles less than 45* to the horizontal? (15.F.10)			
27. Remarks: (Enter actions taken for “no” answers.)			
Contractor inspector signature			
Contractor QC/safety/project manager signature			

SAFETY CHECKLIST FOR MOTOR VEHICLES , TRAILERS AND TRUCKS

Contract # and title: owned or leased?	
Equipment name & number:	
Contractor:	Subcontractor:
Contractor inspector:	Date inspected:

	Yes	No	N/A
1. Are records of safety inspections of all vehicles available? (18.A.02)			
2. Are all vehicles to be operated between sunset and sunrise equipped with: (18.A.04) a. 2 headlights? b. taillights and brake lights? c. front and back turn signals? d. 3 emergency flares, reflective markers, or equivalent portable warning devices?			
3. Are vehicles, except trailers or semi-trailers having a gross weight of 5000 lbs or less, equipped with service brakes and manually operated parking brakes? (18.A.05)			
4. Are service brakes on trailers and semitrailers controlled from the driver’s seat of the prime mover? (18A.06)			
5. Does the vehicle have: (18.A.06) a. a speedometer? b. a fuel gage? c. an audible warning device (horn)? d. a windshield & adequate windshield wiper? e. an operable defroster and defogging device? f. an adequate rearview mirror? g. a cab, cab shield, and other protection to protect the driver from the elements and falling or shifting materials? h. non-slip surfaces on steps? I. a power-operated starting device?			

	Yes	No	N/A
6. Is all the glass safety glass and is all broken or cracked glass replace? (18.A.07)			
7. Do trailers meet the following: (18A.08) a. Are all towing devices adequate for the weight drawn? b. Are all towing devices properly mounted? c. Are locking devices or a double safety system provided on every 5th wheel mechanism and tow bar arrangement to prevent accidental separation? d. Are trailers coupled with safety chains or cables to the towing vehicle? e. Are trailers equipped with the power brakes equipped with a break-away device which will lock-up the brakes in the event the trailer separates from the towing vehicle?			
8. Are all dump trucks:(18.A.10) a. equipped with a holding device to prevent accidental lowering of the body? b. equipped with a hoist lever secured to prevent accidental starting or tipping? c. equipped with means to determine (from the operator’s position) if the dump box is lowered? d. equipped with trip handles for tailgates that allow the operator to be clear?			
9. Are all buses, trucks and combination of vehicles with a carrying capacity of 1.5 tons or more, to be operated on public roads equipped with: (18.A.11) a. 3 reflective markers? b. 2 wheel chocks for each vehicle? c. at least one 2A:10B:C fire extinguisher? d. at least two properly rated fire extinguishers (for vehicles carrying flammable cargo)? e. a red flag not less than 1 foot square.			
10. Is vehicle exhaust controlled so as not to present a hazard to personnel? (18.A.13)			
11. Are all rubber tired motor vehicles equipped with fenders or with mud flaps if the vehicle is not designed for fenders? (18.A.14)			

	Yes	No	N/A
12. Are all vehicles, except buses, equipped with seat belts? (18.B.02)			
13. Does all self-propelled construction and industrial equipment have a working reverse signal alarm? (16.B.01)			
14. Are all hot surfaces of equipment, including exhaust pipes or other lines, guarded or insulated to prevent injury or fire? (16.B.03)			
15. If an off the road vehicle, is it equipped with rollover protective structures? (16.B.12)			
16. Remarks: (Enter actions taken for “no” answers)			
Contractor inspector signature			
Contractor QC/safety officer/project manager signature			

SAFETY CHECKLIST FOR CRAWLER TRACTORS AND DOZERS

Contract # and title:	
Equipment name & number: owned or leased?	
Contractor:	Subcontractor:
Contractor inspector:	Date inspected:

	Yes	No	N/A
1. Are initial and daily/shift inspection records available? (16.A.01& .02)			
2. Are only qualified operators assigned to operate mechanized equipment? (16.A.04)			
3. Are sufficient lights provided for night operations? (16.A.11)			
4. Is the unit shut down before refueling? (16.A.14)			
5. Does the unit have as a minimum a 5-B:C fire extinguisher? (16.A.26)			
6. Is there an effective, working reverse alarm? (16.B.01)			
7. Are moving parts, shafts, sprockets, belts, etc., guarded? (16.B.03 ,07, and 13)			
8. Is protections against hot surfaces, exhausts, etc., provided? (16.B.03 and .13)			
9. Are fuel tanks located in a manner to prevent spills or overflows from running onto engine exhaust or electrical equipment?			

	Yes	No	N/A
10. Are exhaust discharges directed so they do not endanger person of obstruct operator vision?(16.B.05)			
11. Are seat belts provided? (16B.08)			
12. Is protection (grills, canopies, screens) provided to shield operator from falling or flying objects? (16.B.10 and .11)			
13. Is roll over protection provided? (16.B.12)			
14. Remarks: (Enter actions taken for “no” answers)			
Contractor inspector signature			
Contractor QC/safety officer/project manager signature			

SAFETY CHECKLIST FOR SCRAPERS, MOTOR GRADERS , AND OTHER MOBILE EQUIPMENT

Contract # and title:	
Equipment name and number: owned or leased?	
Contractor:	Subcontractor:
Contractor inspector:	Date inspected:

	Yes	No	N/A
1. Are initial and daily/shift inspection records available? (16.A.01 & .02)			
2. Are only qualified operators assigned to operate equipment? (16.A.04)			
3. Are sufficient lights provided for night operations? (16.A.11)			
4. Does the unit have as a minimum a 5-B:C fire extinguisher? (16.A.26)			
5. Is there an effective working reverse alarm? (16.B.01)			
6. Is the unit shut down for refueling? (16.A.14)			
7. Are moving parts, shafts, sprockets, belts, etc., guarded? (16.B.03, .07 and .13)			
8. Is protection against hot surfaces, exhausts, etc., provided? (16.B.03 and .13)			
9. Are fuel tanks located in a manner to prevent spills or overflow from running onto engine exhaust or electrical equipment? (16.B.04)			
10. Are exhaust discharges directed so they do not endanger persons or obstruct operator vision? (16.B.05)			

	Yes	No	N/A
11. Are seat belts provided for each person required to ride on the equipment? (16.B.08)			
12. Is protection (grills, canopies, screens) provided to shield operators from falling or flying objects? (16.B.10 and .11)			
13. Is roll over protection provided? (16.B.12)			
14. Is a safe means of access to the cab provided (steps, grab bars, non-slip surfaces)? (16.B.03)_			
15. Are adequate head and tail lights provided? (16.A.07)			
16. Have brakes been tested and found satisfactory? (16.A.07)			
17. Does the unit have an emergency brake which will automatically stop the equipment upon brake failure? Is this system manually operable from the drivers position? (16.A.07)			
18. Is all equipment with windshields equipped with powered wipers and defogging or defrosting system? (16.A.07)			
19. Are all vehicles which will be parked or moving slower than normal traffic on haul roads equipped with a yellow flashing light or flasher visible from all directions? (16.A.13)			
20. Is the slow moving emblem used on all vehicles which by design move at 25 MPH or less on public roads? (08A.04)			

	Yes	No	N/A
21. Have air tanks been tested and certified? (20.A.01)			
22. Is an air pressure gage in working condition installed on the unit? (20.A.12)			
23. Does the air tank have an accessible drain valve? (20.B.17)			
24. Remarks: (Enter action taken for all “no” answers)			
Contractor inspector signature			
Contractor QC/safety officer/project manager			

SAFETY CHECKLIST FOR MATERIAL HOISTS

Contract # and title:	
Equipment name & number:	
Contractor:	Subcontractor:
Contract Inspector:	Date inspected:

	Yes	No	N/A
1. Are all hoist towers, masts, guys or braces, counterweights, drive machinery supports, sheave supports, platforms, supporting structures, and accessories designed by a licensed engineer? (16.K.02)			
2. Is a copy of the hoist operating manual available? (16.K.04)			
3. Do all floors and platforms have slip-resistant surfaces? (16.K.08)			
4. Are landings and runways adequately barricaded and is overhead protection provided where needed? (16.K.08)			
5. Are hoisting ropes installed IAW manufacturer's instructions? (16.K.10)			
6. Are operating rules posted at the hoist operator's station? (16.K.14)			
7. Are air powered hoists connected to an air supply of sufficient capacity and pressure to safely operate the hoist? (16.K.15)			
8. Are pneumatic hoses secured by some positive means to prevent accidental disconnection? (16.K.15)			
9. Remarks: (Enter actions taken for all "no" answers.)			
Contractor inspector signature			
Contractor QC/safety officer/project manager signature			

SAD Form 1666g-R Mar 97 Previous editions may be used for contracts referencing the 1992 edition of EM 385-1-1.

SAFETY CHECKLIST FOR EARTH DRILLING EQUIPMENT

Contract # and title:	
Equipment name & number:	
Contractor:	Subcontractor:
Contractor inspector:	Date inspected:

	Yes	No	N/A
1. Is a copy of the manual for all drilling equipment available? (16.M.01)			
2. Have all overhead electrical hazards and potential ground hazards been identified in a site layout plan and addressed in an activity hazard analysis? (16.M.02)			
3. Are MSDSs for all drilling fluids available? (16.M.05)			
4. Does the drilling equipment have 2 easily accessible emergency shut down devices (one for the operator and one for the helper)? (16.M.06)			
5. Is the equipment posted with a warning of electrical hazards? (16.M.06)			
6. Is there a spotter or an electrical proximity warning device available to ensure safe distances from power lines are maintained? (16.M.06)			
7. Remarks: (Enter actions taken for “no” answers)			
Contractor inspector signature			
Contractor QC/safety officer/project manager			

SAD Form 1666h-R Mar 97 Previous editions may be used for contracts referencing the 1992 edition of EM 385-1-1.

TRANSMITTAL OF SHOP DRAWINGS, EQUIPMENT DATA, MATERIAL SAMPLES, OR MANUFACTURER'S CERTIFICATES OF COMPLIANCE *(Read instructions on the reverse side prior to initiating this form)*	DATE	TRANSMITTAL NO.

SECTION I - REQUEST FOR APPROVAL OF THE FOLLOWING ITEMS *(This section will be initiated by the contractor)*

TO:	FROM:	CONTRACT NO.	CHECK ONE: ☐ THIS IS A NEW TRANSMITTAL ☐ THIS IS A RESUBMITTAL OF TRANSMITTAL _____
SPECIFICATION SEC. NO. *(Cover only one section with each transmittal)*	PROJECT TITLE AND LOCATION		CHECK ONE: THIS TRANSMITTAL IS FOR ☐ FIO ☐ GOV'T. APPROVAL

ITEM NO. *a.*	DESCRIPTION OF ITEM SUBMITTED *(Type size, model number/etc.)* *b.*	MFG OR CONTR. CAT., CURVE DRAWING OR BROCHURE NO. *(See instruction no. 8)* *c.*	NO. OF COPIES *d.*	CONTRACT REFERENCE DOCUMENT		FOR CONTRACTOR USE CODE *g.*	VARIATION *(See instruction No. 6)* *h.*	FOR CE USE CODE *i.*
				SPEC. PARA. NO. *e.*	DRAWING SHEET NO. *f.*			

REMARKS	I certify that the above submitted items have been reviewed in detail and are correct and in strict conformance with the contract drawings and specifications except as other wise stated. NAME AND SIGNATURE OF CONTRACTOR

SECTION II - APPROVAL ACTION

ENCLOSURES RETURNED *(List by Item No.)*	NAME, TITLE AND SIGNATURE OF APPROVING AUTHORITY	DATE

INSTRUCTIONS

1. Section I will be initiated by the Contractor in the required number of copies.

2. Each transmittal shall be numbered consecutively in the space provided for "Transmittal No.". This number, in addition to the contract number, will form a serial number for identifying each submittal. For new submittals or resubmittals mark the appropriate box; on resubmittals, insert transmittal number of last submission as well as the new submittal number.

3. The "Item No." will be the same "Item No." as indicated on ENG FORM 4288-R for each entry on this form.

4. Submittals requiring expeditious handling will be submitted on a separate form.

5. Separate transmittal form will be used for submittals under separate sections of the specifications.

6. A check shall be placed in the "Variation" column when a submittal is not in accordance with the plans and specifications--also, a written statement to that effect shall be included in the space provided for "Remarks".

7. Form is self-transmittal, letter of transmittal is not required.

8. When a sample of material or Manufacturer's Certificate of Compliance is transmitted, indicate "Sample" or "Certificate" in column c, Section I.

9. U.S. Army Corps of Engineers approving authority will assign action codes as indicated below in space provided in Section I, column i to each item submitted. In addition they will ensure enclosures are indicated and attached to the form prior to return to the contractor. The Contractor will assign action codes as indicated below in Section I, column g, to each item submitted.

THE FOLLOWING ACTION CODES ARE GIVEN TO ITEMS SUBMITTED

A -- Approved as submitted.

B -- Approved, except as noted on drawings.

C -- Approved, except as noted on drawings.
Refer to attached sheet resubmission required.

D -- Will be returned by separate correspondence.

E -- Disapproved (See attached).

F -- Receipt acknowledged.

FX -- Receipt acknowledged, does not comply as noted with contract requirements.

G -- Other *(Specify)*

10. Approval of items does not relieve the contractor from complying with all the requirements of the contract plans and specifications.

(Reverse of ENG Form 4025-R)

COST ESTIMATE ANALYSIS

For use of this form, see TM 5-800-2; the proponent agency is USACE.

PROJECT	INVITATION/CONTRACTOR	EFFECTIVE PRICING DATE	DATE PREPARED
LOCATION	CODE (Check one) ☐ A ☐ B ☐ C ☐ OTHER	DRAWING NO.	SHEET OF SHEETS
		ESTIMATOR	CHECKED BY

TASK DESCRIPTION	QUANTITY		LABOR				EQUIPMENT		MATERIAL		TOTAL	SHIPPING	
	NO. OF UNITS	UNIT MEAS	MH UNIT	TOTAL HRS	UNIT PRICE	COST	UNIT PRICE	COST	UNIT PRICE	COST		UNIT WT	TOTAL WT
TOTAL THIS SHEET													

DA FORM 5418-R, Apr 85

Approved by OM 0348-0046

DISCLOSURE OF LOBBYING ACTIVITIES

Complete this form to disclose lobbying activities pursuant to 31 U.S.C. 1352
(See reverse for public burden disclosure.)

1. Type of Federal Action:

☐ a. contract
b. grant
c. cooperative agreement
d. loan
e. loan guarantee
f. loan insurance

2. Status of Federal Action:

☐ a. bid/offer/application
b. initial award
c. post-award

3. Report Type:

☐ a. initial filing
b. material change

For Material Change Only:
year _____ quarter _____
date of last report _____

4. Name and Address of Reporting Entity:

☐ Prime ☐ Subawardee
Tier _____, *if known*:

Congressional District, *if known:*

5. If Reporting Entity in No. 4 is Subawardee, Enter Name and Address of Prime:

Congressional District, *if known*:

6. Federal Department/Agency:

7. Federal Program Name/Description:

CFDA Number, *if applicable*: _____

8. Federal Action Number, *if known*:

9. Award Amount, *if known*:

$

10. a. Name and Address of Lobbying Entity
(*if individual, last name, first name, MI):*

b. Individuals Performing Services *(including address if different from No. 10a)*
(last name, first name, MI):

(attach Continuation Sheet(s) SF-LLL-A, *if necessary*)

11. Amount of Payment *(check all that apply)*:

$ _____ ☐ actual ☐ planned

12. Form of Payment *(check all that apply)*:

☐ a. cash
☐ b. in-kind; specify: nature _____
value _____

13. Type of Payment *(check all that apply)*:

☐ a. retainer
☐ b. one-time fee
☐ c. commission
☐ d. contingent fee
☐ e. deferred
☐ f. other; specify: _____

14. Brief Description of Services Performed or to be Performed and Date(s) of Service, including officer(s), employee(s), or Member(s) contacted, for Payment indicated in Item 11:

(attach Continuation Sheet(s) SF-LLL-A, *if necessary*)

15. Continuation Sheet(s) SF-LLL-A attached: ☐ Yes ☐ No

16. Information requested through this form is authorized by title 31 U.S.C section 1352. This disclosure of lobbyig activities is a materia representation of fact upon which reliance was placed by the tier above when this transaction was made or entered into. This disclosure is required pursuant to 31 U.S.C. 1352 . This information will be reported to the Congress semi-annually and will be available for public inspection. Any person who fails to

Signature: _____

Print Name: _____

Title: _____

Telephone No.: _____ **Date:** _____

Federal Use Only:

Authorized for Local Reproduction

INSTRUCTIONS FOR COMPLETION OF SF-LLL, DISCLOSURE OF LOBBYING ACTIVITIES

This disclosure form shall be completed by the reporting entity, whether subawardee or prime Federal recipient, at the initiation or receipt of a covered Federal action, or a material change to a previous filing, pursuant to title 31 U.S.C. section 1352. The filing of a form is required for each payment or agreement to make payment to any lobbying entity for influencing or attempting to influence an officer or employee of any agency, a Member of Congress, an officer or employee of Congress, or an employee of a member of Congress in connection with a covered Federal action. Use the SF-LLL-A Continuation Sheet for additional information if the space on the form is inadequate. Complete all items that apply for both the initial filing and material change report. Refer to the implementing guidance published by the Office of Management and Budget for additional information.

1. Identify the type of covered Federal action for which lobbying activity is and/or has been secured to influence the outcome of a covered Federal action.

2. Identify the status of the covered Federal action.

3. Identify the appropriate classification of this report. If this is a followup report caused by a material change to the information previously reported, enter the year and quarter in which the change occurred. Enter the date of the last previously submitted report by this reporting entity for this covered Federal action.

4. Enter the full name, address, city, state and zip code of the reporting entity. Include Congressional District, if known. Check the appropriate classification of the reporting entity that designates if it is, or expects to be, a prime or subaward recipient. Identify the tier of the subawardee, e.g., the first subawardee of the prime is the 1st tier. Subawards include but are not limited to subcontracts, subgrants and contract awards under grants.

5. If the organization filing the report in item 4 checks “Subawardee”, then enter the full name, address, city, state and zip code of the prime Federal recipient. Include Congressional District, if known.

6. Enter the name of the Federal agency making the award or loan commitment. Include at least one organizational level below agency name, if known. For example, Department of Transportation, United States Coast Guard.

7. Enter the Federal program name or description for the covered Federal action (item 1). If known, enter the full Catalog of Federal Domestic Assistance (CFDA) number for grants, cooperative agreements, loans, and loan commitments.

8. Enter the most appropriate Federal identifying number available for the Federal action identified in item 1 (e.g., Request for Proposal (RFP) number; Invitation for Bid (IFB) number; grant announcement number; the contract, grant, or loan award number; the application/proposal control number assigned by the Federal agency). Include prefixes, e.g., “RFP-DE-90-001.”

9. For a covered Federal action where there has been an award or loan commitment by the Federal agency, enter the Federal amount of the award/loan commitment for the prime entity identified in item 4 or 5.

10. (a) Enter the full name, address, city, state and zip code of the lobbying entity engaged by the reporting entity identified in item 4 to influence the covered Federal action.

    (b) Enter the full names of the individuals(s) performing services, and include full address if different from 10 (a). Enter Last Name, First Name, and Middle Initial (MI).

11. Enter the amount of compensation paid or reasonably expected to be paid by the reporting entity (item 4) to the lobbying entity (item 10). Indicate whether the payment has been made (actual) or will be made (planned). Check all boxes that apply. If this is a material change report, enter the cumulative amount of payment made or planned to be made.

12. Check the appropriate box(es). Check all boxes that apply. If payment is made through an in-kind contribution, specify the nature and value of the in-kind payment.

13. Check the appropriate box(es). Check all boxes that apply. If other, specify nature.

    Provide a specific and detailed description of the services that the lobbyist has performed, or will be expected to perform, and the date(s) of any services rendered. Include all preparatory and related activity, not just time spent in

Public reporting burden for this collection of information is estimated to average 30 minutes per response, including time for reviewing instructions, searching existing data sources, gathering and maintaining the data needed, and completing and reviewing the collection of information. Send comments regarding the burden estimate or any other aspect of this collection of information, including suggestions for reducing this burden, to the Office of Management and Budget, Paperwork Reduction Project (0348-0046), Washington, D.C. 20503.

DISCLOSURE OF LOBBYING ACTIVITIES
CONTINUATION SHEET

Approved by OM
0348-0046

Reporting Entity: _____ Page ____ of ____ ____

*U.S. G.P.O. 1990-260-708:00012

REAL PROPERTY INVENTORY

ITEM	TALLY	TOTAL
COMMODES		
LAVATORIES		
URINALS		
EXHAUST FAN (9")		
EXHAUST FAN (OTHER)		
WATER COOLER		
HOTWATER HEATER		
MOP SINK		
AC PLANT	LS 5 TN. 5-25 TN. 25-100 TN. OVER 100 TN.	
AS (WINDOW TYPE)		
FIRE ALARM SYSTEM	MANUAL HALON SPRINKLER	
EMERGENCY LIGHTS		
UNIT HEATER		
STRIP HEATER		
COOLING TOWER		
WALK-IN COOLER		
AIR CURTAIN		
EYE WASH		
SHOWERS		
BOILER	GAS FIRED OIL FIRED STEAM	
FUEL TANK	UNDERGROUND OUTSIDE	

REAL PROPERTY INVENTORY

ITEM	TALLY	TOTAL
WASH BASIN		
AIR COMPRESSOR		
HOISTS		
INVENTORY BY:		DATA:
RECONCILED BY:		DATA:

REAL PROPERTY INVENTORY

ITEM	TALLY	TOTAL
INVENTORIED BY:		DATE:
RECONCILED BY:		DATE:

FORT STEWART & HUNTER ARMY AIRFIELD
BORROW PIT EXCAVATION PERMIT

*Date of Application:

*Applicant (user/unit):

*Borrow Pit Location (Pit #): *Ft. Stewart/HAAF training area,*

*Cubic Yards required:

*Type of Material:

*Final Destination:

*Date to Begin:

*Date to End:

*POC (On-site Manager):

*POC Phone Number:

_____

Below line for office use only.

_____

On-Site Manager/Operator – mobile number

_____

Government Contracting Officer Representative

_____

Approved for Borrow Pit Number

_____

Borrow Pit Management - Environmental

(*912-767-9443/fax-767-9779, George Harris or Anthony Austermann*)

Please retain a copy of this Permit, on site, with the operator and notify Range Control when entering or leaving the training area.

Borrow Pit Release/Checkout is required before leaving the borrow pit area.

_____

Release Approved by/date

Surface Mining (Borrow Pit) Standard Operating Procedure

Excavation Procedure:

1. The Operator of the borrow pit will maintain or create a rim ditch to maximize accessibility to borrow pit materials and ultimately to optimize excavation of that material.
2. The Operator will utilize a water pump, where and when appropriate allowing him access to fill materials in a manner consistent with proper surfacing mining procedures.
3. The Operator shall show a plan as to how the property will be mined, the limits of the affected acreage, the natural drainage features and water disposal, the initial mining and overburden (spoil) area(s), the erosion and sedimentation controls, the ingress/egress area(s), the direction and schedule of mining advancement, the area to be left undisturbed (buffer) where necessary, and a plan that shows projected final reclamation of the site.
4. All borrow pit design and excavation actions shall support the objective of the borrow pit eventually becoming a recreational fishpond, if soil conditions, location and ground water resources favor such development. To accomplish this objective the following procedures must be employed.
    a. Average depth, when abandoned, will be 6 feet minimum and 12 feet maximum (water depth will range from 3-8 feet).
    b. Borrow pits will be excavated in a manner, *from the beginning*, to ultimately move them to a useable recreational fishpond.

***The pit operator shall be responsible for maintaining a 4:1 slope on all pit walls/edges and marking these slopes/edges in a manner as to prevent any foot or vehicle traffic from inadvertently falling into the** pit.*

Erosion & Sedimentation Control Measures:
- Remain within the boundaries of the borrow pit, which are marked by "surrounding trees and the perimeter road", while making every effort to retain and/or create a buffer zone(s) of undisturbed/natural vegetation following all guideline within *Georgia's Best Management Practices* to prevent silts and sediments from leaving the borrow pit area and entering the waters of the State of Georgia.

Water Quality Control Measures:
- Borrow pit excavation shall not be conducted within 100 feet of the banks of any waters of the State of Georgia, nor discharges to the water or ground to ensure no adverse affects on these waters.
- No Point Source discharges shall be allowed without coordination with the Environmental Branch, and BMPs will be followed at all times.

Sensitive/Special Sites Measures:
- If historical or archaeological resources are encountered during excavation of this borrow pit. Stop working until the Environmental Branch has cleared the pit. *Immediately contact the* ***Cultural Resources Office - 767-3359/2010***
- No borrow pit may be expanded that is in the proximity of a protected cultural resource site or within the cantonment area.

Where applicable, adverse effects from audible elements (blasting), and visual elements are to be avoided near these sites so as not to diminish the integrity of the location, design, setting, materials, workmanship, or other structural details.

Fish and Wildlife Measures:
- Borrow pits or portions of the pits that are no longer suitable for further excavation for fill may be moved toward a final excavation phase that will produce a manageable fish pond.
- The following construction criteria shall strive to be incorporated during excavation for this purpose:
    1. A water depth of 3 to 8 feet
    2. An area of 3 to 10 acres
    3. *All edges sloped at 4:1, with a 5:1 entrance/exit point for gopher tortoise escape, to be converted to a boat ramp upon pond completion.*
    4. Earthen piers may be left within the excavated pond
    5. Soil and erosion controls to stabilize slope and pond margins with appropriate ground cover plants
    6. Borrow pit/pond shall be free of hazards including pilings, poles, abandoned equipment, etc.

Endangered/Protected Species Measures:
- If the borrow pit you are proposing to use is near a protected species, another borrow pit of the same type of material which is near your final destination will be assigned for your use.
- If threatened or endangered species are encountered during excavation of this borrow pit, all work is to be discontinued, and *immediately contact the* ***Fish & Wildlife Office at 767-7263/2584***.

Wetlands Measures:
- Maintain a minimum distance of 50 feet from borrow pit banks to wetlands delineation (footprints).

Solid/Hazardous Waste Measures:
- All solid and hazardous wastes shall be disposed of properly.
- No debris will be left at, in, or around the borrow pit.

Air Quality Measures:
- Where applicable, adverse effects from atmospheric elements, specifically fugitive dust, are to be prevented so as to avoid any significant deterioration of the air quality.

**** If the borrow pit you are proposing to use has been moved into this final excavation phase or has already been converted into a fishpond, another borrow pit of the same type of material which is near your final destination will be assigned for your use. Also, seasonal conditions may be such as to merit utilization of another site to offset unsafe conditions. These sites will require coordination with your POC for utilization. If necessary, another borrow pit of the same material type that is near your final destination will be assigned for your use.***

** The following pass must be obtained from the Range Control Office* ***before entering*** *any Training Area.*

POV PASS FOR FORT STEWART ROADS AND TRAINING AREAS

TO: Appropriate Range Guards and/or military police

FROM: Chief Range Division, Fort Stewart Ga. 31314 (912) 767-877/8100

The following individual(s) is/are authorized access to the following Training Area/Facilities beginning _____ thru _____ _____
(Start Date) (End Date)

_____ _____
Rank, Name (Last, First) Training Area(s) Facility

_____ _____
Organization Phone Number

_____
Reason for Access Pass

_____
Vehicle (Model) Year (License Plate Number)
(State)

Statement of understanding

I understand that I am permitted to use only the above listed training area(s) and roads leading to and from that area. I may only use that area/facility for the date and time listed below. I understand that I am using these roads at my own risk, and the Commander, 3rd infantry Division and Fort Stewart Assume no responsibility for my safety.

Permanently off limit areas- High Risk Dud Area: Artillery Impact Area, Aerial Gunnery Ranges 1-3 (AGR), EOD Area, Tank Gunnery Ranges (B9-16) and small arms impact area, Luzon Range. Abandoned Ranges located in C1 and C4 training areas.

CAUTION: DO NOT DISTURB UNEXPLODED AMMUNITION! Mark location and notify Range Control (912) 767-8777 or call the Military Police at 911.

I have been briefed and understand the OFF-LIMITS areas and the limitations of this pass. I will notify Range Control at 767-8777 prior to entering an area and upon departure.

_____ _____
Chief, Range Division Bearer's Signature

POST ON DASHBOARD OF VEHICLE

PROJECT TABLE OF CONTENTS

DIVISION 01 - GENERAL REQUIREMENTS

01312A QUALITY CONTROL SYSTEM (QCS)
01320A PROJECT SCHEDULE
01330 SUBMITTAL PROCEDURES
01335 SUSTAINABLE DESIGN AND DEVELOPMENT (SPiRiT)
01354 EROSION AND SEDIMENTATION CONTROL
01420 SOURCES FOR REFERENCE PUBLICATIONS
01451A CONTRACTOR QUALITY CONTROL
01500 TEMPORARY CONSTRUCTION FACILITIES - MISCELLANEOUS ITEMS
01670 RECYCLED / RECOVERED MATERIALS
01780 CLOSEOUT SUBMITTALS
01781 OPERATION AND MAINTENANCE DATA

DIVISION 02 - SITE CONSTRUCTION

02220 DEMOLITION
02231 CLEARING AND GRUBBING
02300 EARTHWORK
02315 EXCAVATION, FILLING AND BACKFILLING FOR BUILDINGS
02316 EXCAVATION, TRENCHING, AND BACKFILLING FOR UTILITIES SYSTEMS
02364 TERMITICIDE TREATMENT MEASURES FOR SUBTERRANEAN TERMITE CONTROL
02510A WATER DISTRIBUTION SYSTEM
02531 SANITARY SEWERS
02532A FORCE MAINS; SEWER
02722A AGGREGATE AND/OR GRADED-CRUSHED AGGREGATE BASE COURSE
02741A HOT-MIX ASPHALT (HMA) FOR ROADS
02748A BITUMINOUS TACK AND PRIME COATS
02754A CONCRETE PAVEMENTS FOR SMALL PROJECTS
02770A CONCRETE SIDEWALKS AND CURBS AND GUTTERS
02821A FENCING
02921A SEEDING
02922A SODDING

DIVISION 03 - CONCRETE

03307A CONCRETE FOR MINOR STRUCTURES

DIVISION 04 - MASONRY

04200 MASONRY

DIVISION 05 - METALS

05400 COLD-FORMED METAL FRAMING
05500A MISCELLANEOUS METAL

DIVISION 06 - WOOD AND PLASTICS

06100A ROUGH CARPENTRY

DIVISION 07 - THERMAL AND MOISTURE PROTECTION

07840 FIRESTOPPING
07900A JOINT SEALING

DIVISION 08 - DOORS AND WINDOWS

08110 STEEL DOORS AND FRAMES
08330A OVERHEAD ROLLING DOORS
08710 DOOR HARDWARE

DIVISION 09 - FINISHES

09100N METAL SUPPORT ASSEMBLIES
09250 GYPSUM BOARD
09510 ACOUSTICAL CEILINGS
09650 RESILIENT FLOORING
09900 PAINTS AND COATINGS

DIVISION 10 - SPECIALTIES

10153 TOILET PARTITIONS
10800 TOILET ACCESSORIES

DIVISION 11 - EQUIPMENT

11310A PUMPS; SEWAGE AND SLUDGE

DIVISION 13 - SPECIAL CONSTRUCTION

13080 SEISMIC PROTECTION FOR MISCELLANEOUS EQUIPMENT
13100A LIGHTNING PROTECTION SYSTEM
13121A METAL BUILDING SYSTEMS (MINOR REQUIREMENTS)
13851A FIRE DETECTION AND ALARM SYSTEM, ADDRESSABLE
13930A WET PIPE SPRINKLER SYSTEM, FIRE PROTECTION

DIVISION 15 - MECHANICAL

15070A SEISMIC PROTECTION FOR MECHANICAL EQUIPMENT
15080A THERMAL INSULATION FOR MECHANICAL SYSTEMS
15182 REFRIGERANT PIPING
15400A PLUMBING, GENERAL PURPOSE
15566A WARM AIR HEATING SYSTEMS
15700A UNITARY HEATING AND COOLING EQUIPMENT
15895 AIR SUPPLY, DISTRIBUTION, VENTILATION, AND EXHAUST SYSTEM
15990A TESTING, ADJUSTING, AND BALANCING OF HVAC SYSTEMS
15995A *1 COMMISSIONING OF HVAC SYSTEMS

DIVISION 16 - ELECTRICAL

16070A SEISMIC PROTECTION FOR ELECTRICAL EQUIPMENT
16370A ELECTRICAL DISTRIBUTION SYSTEM, AERIAL
16375A ELECTRICAL DISTRIBUTION SYSTEM, UNDERGROUND
16415A ELECTRICAL WORK, INTERIOR
16710A PREMISES DISTRIBUTION SYSTEM
16711A TELEPHONE SYSTEM, OUTSIDE PLANT
16900 MASS NOTIFICATION SYSTEM

-- End of Project Table of Contents --

DIVISION 01 -GENERAL REQUIREMENTS

SECTION 01312A

SECTION TABLE OF CONTENTS

QUALITY CONTROL SYSTEM (QCS)

1.1 GENERAL
1.1.1Correspondence and Electronic Communications
1.1.2 Other Factors
1.2 QCS SOFTWARE
1.3 SYSTEM REQUIREMENTS
1.4 RELATED INFORMATION
1.4.1 QCS User Guide
1.4.2 Contractor Quality Control (CQC) Training
1.5 CONTRACT DATABASE
1.6 DATABASE MAINTENANCE
1.6.1 Administration
1.6.1.1 Contractor Information
1.6.1.2 Subcontractor Inform n
1.6.1.3 Correspondence
1.6.1.5 Equipment
1.6.1.7 Management Reporting
1.6.2 Finances
1.6.2.1 Pay Activity Data
1.6.2.2 Payment Requests
1.6.3 Quality Control (QC)
1.6.3.1 Daily Contractor Quality Control (CQC) Reports
1.6.3.2 Deficiency Tracking.
1.6.3.3 Three-Phase Control Meetings
1.6.3.4 Accident/Safety Tracking.
1.6.3.5 Features of Work
1.6.3.6 QC Requirements
1.6.4 Submittal Management
1.6.5 Schedule
1.6.6 Import/Export of Data
1.7 IMPLEMENTATION
1.8 DATA SUBMISSION VIA COMPUTER DISKETTE OR CD-ROM
1.8.1 File Medium
1.8.2 Disk or CD-ROM Labels
1.8.3 File Names
1.9 MONTHLY COORDINATION MEETING'
1.10 NOTIFICATION OF NONCOMPLIANCE

--End of Section Table of Contents --

SECTION 01312A

QUALITY CONTROL SYSTEM (QC)

1.1 GENERAL

The Government will use the Resident Management Svstem for Windows (RMS) to assist in its monitoring and administration of this contract. The Contractor shall use the Government- furnished construction Contractor Module of RMS, referred to as QCS, to record, maintain, and submit various information throughout the contract period. The contractor module, user manuals, updates, and training information can be downloaded from the RMS web site. This joint Government-Contractor use of RMS and QCS will
Facilitate electronic exchange of information and overall management of the
Contract. QCS provides the means for the Contract or to input, track, and electronically share information with the Government in the following areas:

Administration
Finances
Quality Control
Submittal Monitoring
Scheduling
Import/Export of Data

1.1.1 Correspondence and Electronic Communications

For ease and speed of communications, both Government and Contractor will,
to the maximum extent feasible, exchange correspondence and other documents
in electronic format. Correspondence pay requests and other documents comprising the official contract record shall also be provided in paper format, with signatures and dates where necessary. Paper documents will govern, in the event of discrepancy with the electronic version.

1.1.2 Other Factors

Particular attention is directed to contract Clause, “Schedules for Construction Contracts,” Contract Clause, “Payments”, Section 01320A, PROJECT SCHEDULE, Section 01330, SUBMITTAL PROCEDURE, and Section 01451A, CONTRACTOR QUALITY CONTROL, which have a direct relationship to the reporting to be accomplished through QCS. Also, there is no separate payment for establishing and maintaining the QSC database; all costs

associated therewith shall be included in the contract pricing for the work

1.2 QCS SOFTWARE

QCS is a Windows-based program that can be run on a stand-alone personal computer or on a network. The Government will make available the QCS software to the contractor after award of the construction contract. Prior to the Pre-Construction Conference, the contractor shall be responsible to download, install and use the latest 'version of the QCS software from the Government's RMS Internet Website. upon specific justification and request by the Contractor, the Government can provide QCS on 3-1/2 inch
high-density diskettes or CD-ROM. Any program updates of QCS will be made: available to the Contractor via the Government RM Website as they become
available.

1.3 SYSTEM REQUIREMENTS

The following listed hardware and software is the minimum system configuration that the Contractor sho1ll have to run QCS:

Hardware

IBM-compatible PC with 500 M¥Z Pentium or higher processor

128+ MB RAM for workstation r 256+ MB RA~ for server

1 GB hard drive disk space for sole use by the QCS system

3 1/2 inch high-density floppy drive

Compact disk (CD) Reader, 8x speed or higher

SVGA or higher resolution monitor (1024 x 768, 256 colors)

Mouse or other pointing device

Windows compatible printer (Laser printer must have 4+ MB of RAM)

Connection to the Internet, minimum 56 BPS

Software

MS Windows 98, ME, NT, or 2000

Word Processing software compatible with MS Word 97 or newer

Latest version of : Netscape Navigator, Microsoft Internet Explorer, or other browser that supports IHTML 4.0 or higher

Electronic mail (E-mail), MAPI compatible

Virus protection software that is regularly upgraded with all issued manufacturer's updates.

1.4 RELATED INFORMATION

1.4.1 QCS User Guide

After contract award, the contractor shall download instructions for the installation and use of QCS from the Government RMS Internet Website; the contractor can obtain the current address from the Government. In case of justifiable difficulties, the Government will provide the Contractor with a CD-ROM containing these instructions

1.4.2 Contractor Quality Control (CQC) Training

The use of QCS will be discussed with the contractor’s QC System Manager during the mandatory CQC Training class.

1.5 CONTRACT DATABASE

Prior to the pre-construction conference, the Government shall provide the: Contractor with basic contract award data to use or QCS. The Government will provide data updates to the contractor as needed, generally by files attached to E-mail. These updates will generally consist of submittal reviews, correspondence status, QA comments, and other administrative and QA data

1.6 DATABASE MAINTENANCE

The Contractor shall establish, maintain, and update data for the contract in the QCS database throughout the duration of the contract. The Contractor shall establish and maintain the QCS database at the Contractor's site office. Data update to the Government shall be submitted by E-mail with file attachments, e.g., daily reports, schedule updates, payment requests. If permitted by the Contracting Officer, a data diskette or CD-ROM may be used instead of E-mail (see Paragraph DATA SUBMISSION VIA COMPUTER DISKETTE OR D~ROM). The QCS database typically shall include current data on the following items

1.6.1 Administration

1.6.1.1 Contractor Information

The database shall contain the Contractor's name' address, telephone numbers, management staff, and other required item s. Within 14 calendar days of receipt of QCS software from the Government, the Contractor shall deliver Contractor administrative data in electronic format. via E-mail.

1.6.1.2 Subcontractor Information

The database shall contain the name, Trade, address, phone numbers, and other required information for all subcontractors. A subcontractor must be listed separately for each trade to be performed. Each subcontractor/trade shall be assigned a unique Responsibility Code, provided in QCS. Within 14 calendar days of receipt of QCS software from the Government, the Contractor shall

deliver subcontractor administrative data in electronic format via E-mail.

1.6.1.3 Correspondence

All Contractor correspondence to the Government shall be identified with a serial number. Correspondence initiated by the Contactor's site office shall be prefixed with "S". Letters initiated by the Contractor's home (main) office shall be prefixed with "H". Letter shall be numbered starting from 0001. (e.g., H-0001 0R S-0001). The Government's letters to the Contractor will be prefixed with "C".

1.6.1.5 Equipment

The Contractor's QCS database shall contain a current list of equipment planned for use or being used on the jobsite, including the most recent and planned equipment inspection dates.

1.6.1.7 Management Reporting

QCS includes a number of reports that contractor management can use to track the status of the project. The value of these reports is reflective of the quality of the data input, and is maintained in the various sections of QCS. Among these reports are: Progress payment Request worksheet, QA/QC comments, Submittal Register Status, Three-Phase inspection checklists.

1.6.2 Finances

1.6.2.1 Pay Activity Data

The QCS database shall include a list of pay activities that the Contractor shall develop in conjunction with the construction schedule. The sum of all pay activities shall be equal to the total contract amount, including modifications. Pay activities shall be grouped by Contract Line Item Number (CLIN) and the sum of the activities shall equal the amount of each CLIN. The total of all CLINs equals the Contract amount.

1.6.2.2 Payment Requests

All progress payment requests shall be prepared using QCS. The Contractor shall complete the payment request worksheet and include it with the payment request. The work completed under the contract, measured as percent or as specific quantities, shall be updated at least monthly. After the update, the Contractor shal1 generate a payment request report using QCS. The Contractor shall submit the payment requests with supporting data by E-mail with file attachment(s). If permitted by the Contracting Officer, a data diskette may be used instead of E-mail. A signed paper copy of the approved payment request is also required, which shall govern in the event of discrepancy with the electronic version.

1.6.3 Quality Control (QC)

QCS provides a means to track implementation of the 3-phase QC Control System, prepare daily reports, identify and track deficiencies, document progress of work, and support other contractor QC requirements. The Contractor shall maintain this data on a daily basis. Entered data will automatically output to the QCS generated daily report. The Contractor shall provide the Government a Contractor Quality Control (CQC) Plan within the time required in Section O1451A, CONTRACTOR QALITY CQNTROL. Within seven calendar days of

Government acceptance, the Contractor shall submit a data diskette o~ CD-ROM reflecting t e information contained in the accepted CQC Plan: schedule, pay
activities features of work, submittal register, QC requirements, and equipment list.

1.6.3.1 Daily Contractor Quality control (CQC) Reports

QCS includes the means to produce the, Daily CQC R port. The Contractor may use other formats to record basic QC data. However, the Daily CQC Report generated by QCS shall be the contractor’s officia1 report. Data from any supplemental reports by the Contractor shall be summarized and consolidated onto the QCS Report. Daily CQC Reports shall be submitted as required by Section 0145lA, CONTRACTOR QUALIY CONTROL. Reports shall be submitted electronically to the government using E-mail or diskette within 24 hours after the date covered b the report. Use of either mode of submittal shall be coordinated wit the Government representative. The Contractor shall also provide the Government a signed, printed copy of the daily CQC report

1.6.3.2 Deficiency Tracking.

The Contractor shall use QCS to track deficiencies. Deficiencies identified by the Contractor will be numerically tracked using QC punch list items. The Contractor shall maintain a current log of its QC punch list items in the QCS database. The Government will log the deficiencies it has identified using its QA punch list items. The Government's QA punch list items will be included in its export file to the Contractor. The Contractor shall regularly update the correction status of' both QC and QA punch list items.

1.6.3.3 Three-Phase Control Meetings

The Contractor shall maintain scheduled and actual dates and times of preparatory and initial control meetings in QCS.

1.6.3.4 Accident/Safety Tracking.

The Government will issue safety comments, directions, or guidance whenever safety deficiencies are observed. The Government's safety comments will be included in its export file to the Contractor. The Contractor shall regularly update the correction status of the safety comments. In addition, the contractor shall utilize QCS to advise the Government of any accidents occurring on the jobsite. This brief supplemental

entry is not to be considered as a substitute for completion of mandatory reports, e.g., ENG Form 3394 and OSHA Form 200 or OSHA Form 300.

1.6.3.5 Features of Work

The Contractor shall include a complete list of the features of work in the QCS database. A feature of work may be associated with multiple pay activities. However, each pay activity (see subparagraph "Pay Activity Data") of paragraph "Finances") will only be linked to a single feature of work.

1.6.3.6 QC Requirements

The Contractor shall develop and maintain a complete list of QC testing, transferred and installed property, and user training requirements in QCS. The Contractor shall update all data on these QC requirements as work progresses, and shall promptly provide this information to the Government via QCS.

1.6.4 Submittal Management

The Government will provide the initial submittal resister, ENG Form 4288, SUBMITTAL REGISTER, in electronic format. Thereafter, the Contractor shall maintain a complete list of all submittals, including completion of all data columns. Dates on which submittals are received and returned by the contractor shall use QCS to track and transmit all submittals. ENG Form 4025, submittal transmittal form, and submittal register update, ENG Form 4288, shall be produced using QCS. RMS will be used to update, store and exchange submittal registers and transmittals, but will not be used for storage of actual submittals.

1.6.5 Schedule

The Contractor shall develop a construction schedule consisting of pay activities, in accordance with Contract Clause "Schedules for Construction Contracts", or Section 01320A, PROJECT SCHEDULE, as applicable. This schedule shall be input and maintained in the QCS database either manually or by using the Standard Data Exchange Format (SDEF) (see Section 01320A PROJEJCT SCHEDULE). The updated schedule data shall be included with each pay request submitted by the contractor.

1.6.6 Import/Export of Data

QCS includes the ability to export Contractor data to the Government and to import submittal register and other Government - provided data, and Schedule data using SDEF.

1.7 IMPLEMENTATION

Contractor use of QCS as described in the preceding paragraphs is mandatory. The Contractor shall ensure that sufficient resources are available to maintain its QCS database, and to provide the Government with regular database updates. QCS shall be an integral part of the Contractor's management of quality control.

1.8 DATA SUBMISSION VIA COMPUTER DISETTE OR CD-ROM

The Government-preferred method for contractor's submission of updates, payment requests, correspondence and other data is by E-mail with file attachment(s). For locations where this is not as feasible, the Contracting Officer may permit use of computer diskettes or -R M for data transfer. Data on the disks or CDs shall be exported using the QCS built-in export function. If used, diskettes and CD ROMs will be submitted in accordance with the following:

1.8.1 File Medium

The Contractor shall submit required data on 3_1/ 2' inch double-sided high-density diskettes formatted to hold 1.44 MB of data, capable of running under Microsoft Windows 95 0
newer. Alternatively, CD-ROMS may be used. They shall conform to industry standards used in the United States. All data shall be provided in English.

1.8.2 Disk or CD-ROM Labels

The Contractor shall affix a permanent exterior label to each diskette and: CD-ROM submitted. The label shall indicate in English, the QCS file name,
full contract number, contract name, project location, data date, name and. telephone number of person responsible for the data.

1.8.3 File Names

The Government will provide the file names to be used by the Contractor with the QCS software. I

1.9 MONTHLY COO~DINATION MEETING

The Contractor shall update the QCS database each workday. At least monthly, the Contractor shall generate and submit an export file to the Government with schedule update and progress payment request. As required in Contract Clause "Payments", at least one week prior to submittal, the Contractor shall meet with the Government representative to review the planned progress payment data submission for errors and omissions.
The Contractor shall make all requir1d correction prior to Government acceptance of the export files and progress payment request. Payment requests accompanied by incomplete o~ incorrect data submittals will be returned. The Government will not process progress payments until an acceptable QCS export file is received.

1.10 NOTIFICATION OF NONCOMPLIANCE

The Contracting Officer will notify the contractor
of any detected noncompliance with the requirements of this specification. The Contractor shall take immediate corrective action after receipt of such notice. work site, shall be deemed sufficient for the purpose of notification.

SECTION 01320A

- PROJECT SCHEDULE
(APRIL 03)

DIVISION 01 -GENERAL REQUIREMENTS

SECTION TABLE OF CONTENTS

GENERAL

REFERENCES QUALIFICATIONS

EXECUTION

3.1 GENERAL REQUIREMENTS
3.2 BASIS FOR PAYMENT
3.3 PROJECT SCHEDULE
3.3.1 Use of the Critical Path Method
3.3.2 Level of Detail Required
3.3.2.1 Activity Durations
3.3.2.2 Design and Permit Activities
3.3.2.3 Procurement Activities
3.3.2.4 Critical Activities
3.3.2.5 Government Activities
3.3.2.6 Responsibility
3.3.2.7 Work Areas
3.3.2.8 Modification or Claim Number
3.3.2.9 Bid Item
3.3.2.10 Phase of Work
3.3.2.11 Category of Work
3.3.2.12 Feature of Work
3.3.3 Scheduled Project Completion
3.3.3.1 Project Start Date
3.3.3.2 Constraint of Last Activity
3.3.3.3 Early Project Completion

3.3.4 Interim Completion Dates
3.3.4.1 Start Phase
3.3.4.2 End Phase
3.3.4.3 Phase X
3.3.5 Default Progress Data Disallowed
3.3.6 Out-of-Sequence Progress
3.3.7 Negative Lags
3.4 PROJECT SCHEDULE SUBMISSIONS
3.4.1 Preliminary Project Schedule Submission
3.4.2 Initial Project Schedule Submission
3.4.3 Periodic Schedule Updates
3.4 Standard Activity Coding Dictionary
3.5 SUBMISSION REQUIREMENTS
3.5.1 Data Disks
3.5.1.1 File Medium
3.5.1.2 Disk Label
3.5.1.3 File Name
3.5.2 Narrative Report

3.5.3 Approved Changes Verification
3.5.4 Schedule Reports
3.5.4.1 Activity Report
3 .5 .4 .2 Logic Report
3.5.4.3 Total Float Report
3.5.4.4 Earnings Report
3.5.5 Network Diagram
3.5.5.1 Continuous Flow
3.5.5.2 Project Milestone Dates
3.5.5.3 Critical Path
3.5.5.4 Banding
3.5.5.5 S-Curves
3.6 PERIODIC PROGRESS MEETINGS
3.6.1 Meeting Attendance
3.6.2 Update Submission Following Progress Meeting
3.6.3 Progress Meeting Contents
3.6.3.1 Start and Finish Dates 3.6.3.2 Time Completion
3.6.3.3 Cost Completion
3.6.3.4 Logic Changes
3.6.3.5 Other Changes
3.7 REQUESTS FOR TIME EXTENSIONS
3.7.1 Justification of Delay
3.7.2 Submission Requirements
3.7.3 Additional Submission Requirements
3.8 DIRECTED CHANGES
3.9 OWNERSHIP OF FLOAT

--End of Section Table of Contents --

1.1 REFERENCES

The publications listed below form a part of the specification to the extent referenced. The publication is referenced in the text by basic designation only.

ER 1-1-11 Progress, Schedules, and Network Analysis Systems (June 1995)

1.2 QUALIFICATIONS -CONTRACTOR SCHEDULING REPRESENTATIVE

The Contractor shall designate, a scheduling representative, the individual tasked with the responsibility for preparation-updating-revision of the NAS schedule who shall be responsible for the preparation and submittal of the entire NAS project schedule including all items specified below and revisions to the schedule or supplemental completion schedules, as applicable or directed by the Contracting Officer. The scheduling representative shall be approved by the Contracting Officer based on a resume indicating as a minimum, formal training from software vendor or 5 years experience in working with NAS schedules.

EXECUTION

3.1 GENERAL REQUIREMENTS

Pursuant to the Contract Clause, SCHEDULE FOR CONSTRUCTION CONTRACTS, a Project Schedule as described below shall be prepared. The NAS Project Schedule shall be a composite schedule including the design and construction activities. The scheduling of construction only and design-construction shall be the responsibility of the Contractor. Contractor management personnel shall actively participate in its development. Subcontractors and suppliers Designers, Subcontractors and suppliers working on the project shall also contribute in developing and maintaining an accurate Project Schedule. The approved Project Schedule shall be used to measure the progress of the work, to aid in evaluating time extensions, and to provide the basis of all progress payments.

The Government will use the NAS Project Schedule to evaluate the contractor’s progress for timely completion, plan for Quality Assurance verification of the work and evaluate the effects of a proposed modification on the contract duration (critical path activities

3.2 BASIS FOR PAYMENT

The schedule shall be the basis for measuring Contractor progress. Lack of an approved schedule or scheduling personnel will result in an inability of the Contracting Officer to evaluate Contractor's progress for the purposes of payment. Failure of the Contractor to provide all information, as specified below, shall result in the disapproval of the entire Project Schedule submission and the inability of the Contracting Officer to evaluate Contractor progress for payment purposes. In the case where Project Schedule revisions have been directed by the Contracting Officer and these revisions have not been included in the Project

Schedule, the Contracting Officer may hold retainage up to the maximum allowed by contract, each payment period, until revisions to the Project Schedule have been made.

3.3 PROJECT SCHEDULE

Project schedule software

The contractor shall prepare the NAS schedule using a computer software system. The system utilized by the Contractor shall be capable of satisfying all requirements of this specification and ER 1-1-11. Manual methods used to produce any required information shall require prior approval by the Contracting Officer. The Contracting Officer intends to use PRIMAVERA P3.

Should the contractor utilize software that is different than that utilized by the Contracting Officer, based on the software utilized by the contractor for the preparation of the NAS schedule, the contractor shall provide a copy of the software and a license to the Administrative Contracting Officer at the Government field office until final payment. The software and license shall be returned to the contractor. The Contractor shall submit a copy of the user's manual outlining the selected CPM computer program's mathematical analysis capabilities, details, functions and operation.

The Contractor shall provide to the Government a complete input listing for the selected software.

3.3.3.1 Use of the Critical Path Method

The Critical Path Method (CPM) of network calculation shall be used to generate the Project Schedule. The Contractor shall provide the Project Schedule in the Precedence Diagram Method (PDM).

3.3.3.2 Level of Detail Required

The Project Schedule shall include an appropriate level of detail. Failure to develop or update the project Schedule or provide data to the Contracting Officer at the appropriate level of detail, as specified by the Contracting Officer, shall result in the disapproval of the schedule. The Contracting Officer will use, but is not limited to, the following conditions to determine the appropriate level of detail to be used in the Project Schedule:

3.3.2.1 Activity Durations

Contractor submissions shall follow the direction of the Contracting Officer regarding reasonable activity durations. Reasonable durations are those that allow the progress of activities to be accurately determined between payment periods (usually less than 2 percent of all non-procurement activities' Original Durations are greater than 20 days). Durations shall be in work days.

3.3.2.2 Design and Permit Activities

NOTE: This paragraph applies only to design-build procurements.

**Design and permitting activities, including necessary conferences and follow-up actions and design package submission dates, shall be integrated
into the schedule.**

3.3.2.3 Procurement Activities

Tasks related to the procurement of long lead materials or equipment shall be included as separate activities in the project schedule. Long lead materials and equipment are those materials that have a procurement cycle of over {90} days. Examples of key procurement activities include, but are not limited to: shop drawing submittals/ approvals or review/and fabrication/delivery.

3.3.2.4 Critical Submission Activities

The following activities shall be listed as separate line activities on the Contractor's project schedule:

a. Submission and approval of mechanical/electrical layout drawings

b Submission and approval of 0 & M manuals

c. Submission and approval of as-built drawings

d. Submission and approval of 1354 data and installed equipment lists

e. Submission and approval of testing and air balance (TAB)

f. Submission of TAB specialist design review report

g. Submission and approval of fire protection specialist

**h. Submission and approval of testing and balancing of HVAC plus commissioning
plans and data and water balance dates**

3.3.2.5 Government Activities

Government and other agency activities that could impact progress shall be included in the schedule. These activities include, but are not limited to: Government approvals, Government review and verification that design submittals are in accordance with the RFP inspections, utility tie-in, Government Furnished Equipment (GFE) and Notice to Proceed (NTP) for phasing requirements. Government approval of shop drawings activities should be shown with the duration at least the minimum allowed by the contract. The contractor’s failure to provide reasonable durations in its schedule for Government activities does not establish or change the Government’s review or approval path periods and the durations established for Government’s activities are subject to approval by the Contracting Officer.

3.3.2.5.1 Work activities to be included on the critical path

CQC (all) mechanical systems test (indicate the specific system)

CQC (all) electrical system tests (indicate the specific system)

Government QA (all) mechanical system acceptance/operational test (indicate specific system)

Government QA (all) electrical system acceptance /operational test (indicate specific system)

CQC completion inspection of the entire project

Contractor works off CQC punchlist

Prefinal inspection performed when the facility is completed such that it can be used for it intended function (as determined by the Contracting Officer)

Contractor works off prefinal punchlist

Final/acceptance inspection of the entire project

Contractor works off final punchlist.

Contractor shall allow 45 cal days total duration prior to current contract completion date for the above stated activities. (See specification section 01445 Contractor Quality Control).

Government and other agency activities that could impact progress shall be shown. These activities include, but are not limited to: approvals, approvals, design reviews, environmental permit approvals by State regulators, inspections, utility tie-in, Government Furnished Equipment (GFE) and Notice to Proceed (NTP) for phasing requirements.

3.3.2.5.2 Contracts with multiple buildings/facilities

The contractor shall prepare a separate detailed NAS schedule for each building/facility , as a portion of the master NAS schedule, indicating its specific critical path for firm target completion dates or specified interim completion dates.
The master NAS schedule shall indicate the interface/lag/link between buildings/facilities to maximize/level the labor and other resources and include a work activity (contingency) with a duration equal to the period from the target completion date to the contract completion date.
The master schedule must include the building/facility work activities critical path which is the longest path through the contract and total duration must equal to the contract duration.

3.3.2.5.2.1 Target dates

The contractor shall establish firm target dates in the NAS schedule for the physical completion of each buildings/ facilities included in the contract. The target dates shall be firm dates for the final inspection such that the buildings/facilities will be scheduled to be physically completed in a logical and sequential (stair step) manner during the last

4-6 months of the required contract period to allow a reasonable period for the completion of each building/facility from the CQC completion inspection through the final inspection. The target dates will not have associated Liquidated damages, however the contractor shall submit a supplemental recovery schedule to regain the schedule for completion on the target completion date, as modified.
The buildings/facilities will not be accepted by the government on the target completion date (unless specified in the phasing requirements included in Section -01500). The contactor shall remain be responsible for the building/facilities until final acceptance, as specified in Section 01500.

3.3.2.6 Responsibility

All activities shall be identified in the project schedule by the party responsible to perform the work. Responsibility includes, but is not limited to, the subcontracting firm, contractor work force, or government agency performing a given task. Activities shall not belong to more than one responsible party. The responsible party for each activity shall be identified by the Responsibility Code.

3.3.2.7 Work Areas

All activities shall be identified in the project schedule by the work area in which the activity occurs. Activities shall not be allowed to cover more than one work area. The work area of each activity shall be identified by the Work Area Code.

3.3.2.8 Modification or Claim Number

Any activity that is added or changed by contract modification or used to justify claimed time shall be identified by a mod or claim code that changed the activity. Activities shall not belong to more than one modification or claim item. The modification or claim number of each activity shall be identified by the Mod or Claim Number. Whenever possible, changes shall be added to the schedule by adding new activities. Existing activities shall not normally be changed to reflect modifications

3.3.2.9 Bid Item

All activities shall be identified in the project schedule by the Bid Item to which the activity belongs. An activity shall not contain work in more than one bid item. The bid item for each appropriate activity shall be identified by the Bid Item Code.

3.3.2.10 Phase of Work

All activities shall be identified in the project schedule by the phases of work in which the activity occurs. Activities shall not contain work in more than one phase of work. The project phase of each activity shall be by the unique Phase of Work Code.

3.3.2.11 Category of Work

NOTE: Selection of construction or design-build construction text required.

All Activities shall be identified in the project schedule according to the category of work which best describes the activity. Category of work refers, but is not limited, to the procurement chain of activities including such items as submittals designs, design package submissions design reviews, review conferences, permits, submittals, approvals, procurement, fabrication, delivery, installation, start-up, and testing. The category of work for each activity shall be identified by the Category of Work Code.

3.3.2.12 Feature of Work

All activities shall be identified in the project schedule according to the feature of work to which the activity belongs. Feature of work refers, but is not limited to, a work breakdown structure for the project. The feature of work for each activity shall be identified by the Feature of Work Code.

3.3.3 Scheduled Project Completion

The schedule duration shall extend from NTP to the official contract completion date as awarded (unless approved by Contracting Officer-for early completion).

3.3.3.1 Project Start Date

The schedule shall start no earlier than the date on which the NTP was acknowledged. The Contractor shall include as the first activity in the project schedule an activity called "Start Project". The "Start Project" activity shall have an "ES" constraint date equal to the date that the NTP was acknowledged, and a zero day duration.

3.3.3.2 Constraint of Last Activity

Completion of the last activity in the schedule shall be constrained by the contract completion date. Calculation on project updates shall be such that if the early finish of the last activity falls after the contract completion date, then the float calculation shall reflect a negative float on the critical path. The Contractor shall include as the last activity in the project schedule an activity called "End Project". The "End Project" activity shall have an "LF" constraint date equal to the completion date for the project, and a zero day duration.

3.3.3.3 Early Project Completion

In the event the project schedule shows completion of the project prior to the contract completion date, the Contractor shall identify those activities that have been accelerated and/or those activities that are scheduled in parallel to support the Contractor's "early" completion. Contractor shall specifically address each of the activities noted in the narrative report at every project schedule update period to assist the Contracting Officer in evaluating the Contractor's ability to actually complete prior to the contract period.

The Contractor shall include an activity named "contingency" with no cost and a duration equal to the number of calendar days from the date all the contract work is planned to be completed, to the official contract completion date as awarded.

3.3.4 Interim Completion Dates

Contractually specified interim completion dates shall also be constrained to show negative float if the early finish date of the last activity in that phase falls after the interim completion date.

3.3.4.1 Start Phase

The Contractor shall include as the first activity for a project phase an activity called "Start Phase X" where "X" refers to the phase of work. The "Start Phase X" activity shall have an "ES" constraint date equal to the date on which the NTP was acknowledged, and a zero day duration.

3.3.4.2 End Phase

The Contractor shall include as the last activity *in* a project phase an activity called "End Phase X" where "X" refers to the phase of work. The "End Phase X" activity shall have an "LF" constraint date equal to the completion date for the project, and a zero day duration.

3.3.4.3 Phase X

The Contractor shall include a hammock type activity for each project phase called "Phase X" where "X" refers to the phase of work. The "Phase X" activity shall be logically tied to the earliest and latest activities in the phase.

3.3.5 Default Progress Data Disallowed

NOTE: The last 2 sentences of the paragraph will be deleted if not required for the project.

Actual Start and Finish dates shall not be automatically updated by default mechanisms that may be included *in* CPM scheduling software systems. Actual Start and Finish dates on the CPM schedule shall match those dates provided from Contractor Quality Control Reports. Failure of the Contractor to document the Actual Start and Finish dates on the Daily Quality Control report for every in-progress or completed activity, and failure to ensure that the data contained on the Daily Quality Control reports *is* the sole basis for schedule updating shall result *in* the disapproval of the Contractor's schedule and the inability of the Contracting Officer to evaluate Contractor progress for payment purposes. Updating of the percent complete and the remaining duration of any activity shall be independent functions. Program features which calculate one of these parameters from the other shall be disabled.

3.3.6 Out-of-sequence Progress

Activities that have posted progress without all preceding logic being satisfied (Out-of-Sequence Progress) will be allowed only on a case-by-case approval of the Contracting Officer. The Contractor shall propose logic corrections to eliminate all out of sequence progress or justify not changing the sequencing for approval prior to submitting an updated project schedule.

3.3.7 Negative Lags

Lag durations contained in the project schedule shall not have a negative value.

3.4 PROJECT SCHEDULE SUBMISSIONS

The Contractor shall provide the submissions as described below. The data for each submission is as follows:

The contractor shall provide a bar chart schedule for the first 30 calendar days of the contract at the Pre-construction conference.

3.4.1 Preliminary NAS Project Schedule Submission

The Preliminary NAS Project Schedule, defining the Contractor's planned operations for the first 60 calendar days shall be submitted for approval at within 30 days after NTP.
The approved preliminary schedule shall be used for payment purposes not to exceed 60 calendar days after NTP. The preliminary schedule shall be detailed for the first 60 days and depict the remainder of the project in summary format.

The preliminary schedule shall be submitted on data disk or CD (2 copies).

One hard copy of diagrams

Three hared copies of all sorts / report ----earning curve----manpower plot

3.4.2 Initial NAS Project Schedule Submission

The Initial NAS Project Schedule shall be submitted for approval within 70 calendar days after NTP is acknowledged. The schedule shall include detailed activities for the entire project with a reasonable sequence of activities, and shall be at a reasonable level of detail as approved by the Contracting Officer.

The initial schedule shall be submitted on data disk or CD (2 copies),

One hard copy of diagrams

Three hard copies of all sorts / report ----earning curve----manpower plot

3.4.3 Periodic -Monthly Updates (entire NAS project schedule

The Contractor shall submit monthly schedule updates to the Contracting Officer for approval. Monthly updates shall continue until the contract is accepted by the Contracting Officer. These submissions shall enable the Contracting Officer to evaluate the Contractor's monthly progress.

The monthly updates shall be submitted on data disk or CD (2 copies),

One hard copy of diagrams

Three hard copies of all sorts / report ----earning curve----manpower plot

The contractor's invoice may be deemed as an improper invoice, if it fails to provide monthly updates acceptable to Contracting Officer, this may delay progress payment and may result in an interim unsatisfactory performance rating.
The contractor shall include its requests to revise/adjust the NAS schedule for approval, prior to implementing the revisions into the official schedule.

3.4.4 Standard Activity Coding Dictionary

The Contractor shall use the activity coding structure defined in the Standard Data Exchange Format (SDEF) in ER 1-1-11, Appendix A. This exact structure is mandatory, even if some fields are not used.

3.5 SUBMISSION REQUIREMENTS

3.5.1 DATA DISKS

Two data disks containing the project schedule shall be provided. Data on the disks shall adhere to the SDEF format specified in ER 1-1-11,
Appendix A.

3.5.1.1 File Medium

Required data shall be submitted on CD including the baseline and all updates (cumulative). Monthly data disks must be, 3.5 disks, formatted to hold 1.44 MB of data, under the MS-DOS Version S. or 6.x, unless otherwise approved by the Contracting Officer.

3.5.1.2 Disk Label

A permanent exterior label shall be affixed to each disk submitted. The label shall indicate the type of schedule (Preliminary, Initial, Update, or Change), full contract number, project name, project location, data date, name and telephone number or person responsible for the schedule, and the MS-DOS version used to format the disk

3.5.1.3 File Name

Each file submitted shall have a name related to either the schedule data date, project name, or contract number. The Contractor shall develop a naming convention that will ensure that the names of the files submitted are unique. The Contractor shall submit the file naming convention to the Contracting Officer for approval. Provide the naming convention (limited to 4 characters: i.e. Filename (contract 99-47) = 47BL for Baseline and 4701 for 1st monthly.

3.5.2 Narrative Report

A Narrative Report shall be provided with the preliminary, initial, and each monthly update of the project schedule. This report shall include: a description of activities along the most critical paths, a description of current and anticipated problem areas or delaying factors and their impact, and an explanation of corrective actions taken or required to be taken. The narrative report is expected to relay to the Government, the Contractor's thorough analysis of the schedule output and its plans to compensate for any problems, either current or potential, which are revealed through that analysis.
If the contractor believes that any Government action or inaction has, or potentially, will impact its progress, it will include the specific notice of the fact in this report. This information should include the activity number of the impacted work, nature and duration of the impact.

The narrative report shall address all modifications and weather activities that were input for the progress and their impact on the contract completion and total float.

3.5.3 Approved Changes Verification

Only project schedule changes that have been previously approved by the Contracting Officer shall be included in the schedule submission. The Narrative Report shall specifically reference, on an activity-by-activity basis, all changes made since the previous period and relate each change to documented, approved schedule changes.

3.5.3.1 Project Monthly and Specific Milestone Dates

Milestone dates shall be shown on the diagram for start of project, each monthly milestone for the critical path activity in progress as of the data date, specific milestones such as: foundation complete, structure complete, roof complete, facility dried in, interim completion dates, and other specific contract milestones as required by the Contracting Officer.

3.5.4 Schedule Reports

The format for each activity for the schedule reports listed below shall contain: Activity Numbers, Activity Description, Original Duration, Remaining Duration, Early Start Date, Early Finish Date, Late Start Date, Late Finish Date, Total Float. Actual Start and Actual Finish Dates shall be printed for those activities in progress or completed.

Milestone Report
The established monthly and special milestones shall be included in this report.
The milestones must be established for each significant project features such as:
Clearing-grading-demolition, foundation, slab-on-grade, structure-frame, exterior walls-windows, roof-building dry-in, interior walls-mech/elect R/I, above ceiling mech/elect R/I, ceiling, interior wall finish--doors, painting-coverings, floor finish, installation of mech/elect and other equipment-fixtures-casework, plumbing, HVAC system, finish interior mech/elect, testing-commissioning mech/elect systems, onsite utilities, paving-landscaping, prefinal-final inspections—final cleanup and/or other features (as applicable for the project).

Late Start /Late Finish Report

Late Start –Actual Start/Late Finish-Actual Finish-----total float—---sorted by LS in chronological order from NTP date to contract completion date including the previous 2 months for scheduled LS dates.

3.5.4.1 Activity Report

A list of all activities sorted according to activity number

3.5.4.2 Logic Report

A list of Preceding and Succeeding activities for every activity in ascending order by activity number. Preceding and succeeding activities shall include all information listed above in paragraph Schedule Reports. A blank line shall be left between each activity grouping.

3.5.4.3 Total Float Report

A list of all incomplete activities sorted in ascending order of total float. Activities which have the same amount of total float shall be listed in ascending order of Early Start Dates. Completed activities shall not be shown on this report.

3.5.4.4 Earnings Report

A compilation of the Contractor's Total Earnings on the project from the NTP until the most recent Monthly Progress Meeting. This report shall reflect the Earnings of specific activities based on the agreements made in the field and approved between the Contractor and Contracting Officer at the most recent Monthly Progress Meeting. Provided that the Contractor has provided a complete schedule update, this report shall serve as the basis of determining Contractor Payment. Activities shall be grouped by bid item and sorted by activity numbers. This report shall: sum all activities in a bid item and provide a bid item percent; and complete and sum all bid items to provide a total project percent complete. The printed report shall contain, for each activity: the Activity Number, Activity Description, Original Budgeted Amount, Total Quantity, Quantity to Date, Percent Complete (based on cost), and Earnings to Date.

3.5.5 Network Diagram

One *hard copy* of the network diagram shall be required on the preliminary schedule, initial schedule submission, and updated on each monthly schedule submissions. Monthly updates must indicate actual progress as of the data date. The network diagram shall depict and display the order and interdependence of activities and the sequence in which the work is to be accomplished.

Network diagrams shall show the order and interdependence of project activities and the sequence in which the work is to be accomplished, as planned by the Contractor. The network diagramming procedure which will be used will show how the start of a given activity is dependent on the completion of preceding activities, and how its completion restricts the start of following activities.

Activity Duration:

The activity duration shall be indicated in "work" days, and revise the assigned calendar.

The contractor may request to change the work days from 5 days/week to 6 or 7 days/week should this action become necessary to regain the schedule due to problems unrelated to the Government actions.

Contractor submissions shall include reasonable activity durations as determined by the contractor and subcontractors. The durations are to be determined by the contractor using the planned crew size/composition.

ALL ACTIVITIES SHALL BE RESOURCE LOADED WITH THE CREW SIZE .

The network diagram shall be required on the initial schedule submission and on monthly schedule update submissions. The network diagram shall depict and display the order and interdependence of activities and the sequence in which the work is to be accomplished. The Contracting Officer will use, but is not limited to, the following conditions to review compliance with this paragraph:

3.5.5.1 Continuous Flow

Diagrams shall show a continuous flow from left to right with no arrows from right to left. The activity number, description, duration, and estimated earned value shall be shown on the diagram.

3.5.5.2 Project Milestone Dates

Dates shall be shown on the diagram for start of project, any contract required interim completion dates, and contract completion dates.

3.5.5.3 Critical Path

The critical path shall be clearly shown

3.5.5.4 Banding

Activities shall be grouped to assist in the understanding of the activity sequence. Typically, this flow will group activities by category of work, work area and/or responsibility.

3.5.5.5 Earning ------S-Curves

Earnings (cash flow) curves (as required for submissions) shall show scheduled ES/EF and LS/LF curves

The monthly updates must indicate the actual progress plotted as of the data date.

The cash flow curves are affected by the assigned cost and duration of the activities.

The LS/LF cash flow curve is expected approximate a reasonable % earned for any % of duration completed based on previous contracts which were completed on schedule.

Earnings curves showing projected early and late earnings and earnings to date.

3.6 PERIODIC-MONTHLY PROGRESS MEETINGS

There will be two progress meetings.

First- A progress update meeting will be held at the onsite between USACE and the authorized contractor representatives, on the agreed cut-off date established at the pre-construction conference. During this meeting the Contractor shall indicate it's requested percentage completed on each activity on which there was a revised percentage of completion. The Contracting Officer must approve actual progress percentages for each Progress meetings to discuss payment shall include a monthly onsite meeting or other regular intervals mutually agreed to at the pre-construction conference. During this meeting the Contractor shall describe, on an activity-by-activity basis, all proposed revisions and adjustments to the project schedule required to reflect the current status of the project.
The Contracting Officer will approve activity progress, proposed revisions, and adjustments as appropriate.

The updated progress data will be evaluated at the second progress meeting.

Second- A progress evaluation meeting shall be held with the contractor, after the updating of the current progress period work activities percentage is complete including modifications and adverse weather activities, to evaluate progress and the NAS schedule.

Adjustments to the NAS schedule. Update information must include the Actual Start Dates, Actual Finish Dates, Remaining Durations, and Cost-to-Date. The Contractor must address all the activities on an activity-by-activity basis during the second progress meeting.

The monthly updated NAS schedule is submitted to the Contracting Officer, for approval, with the contractor's request for progress payment. The evaluation will include a review of actual durations compared to scheduled durations for critical and non-critical activities, progress on critical activities and near critical activities, trends, and current/potential problem areas, cash flow progress, and projected workflow of activities.

The contractor's narrative report shall be available for review at least three days prior to the second progress meeting.

The monthly NAS schedule update must include an adverse weather activity for work activities impacted greated than 50% of the work shift or were impacted by previous adverse weather (carry-over). The adverse weather activities must be added and applied to the NAS schedule, (all work activities -within 10 days float or less when compared to the current critical path and current critical activities)--AFTER all of the modifications finalized within the month have been applied to the NAS schedule in the sequential order of finalization during the progress month

The time extension for usually severe weather (in calendar days) must result from the agreement reached or (as directed) by the Contracting Officer) following the joint Contractor and Contracting Officer monthly weather evaluation held to review the CQC and QA daily reports, not later than 7 calendar days after the end of the progress month. The Contracting Officer will confirm the results of this evaluation to the contractor in writing monthly.

The official contract completion date must be revised on the NAS schedule, monthly (if applicable) based on the Contracting Officer's letter confirming the results of the monthly evaluation, to include the time extension in calendars of unusually severe weather (actual adverse weather impact less the specified anticipated adverse weather impact, for the specific month). A new work activity shall be entered into the NAS schedule adjacent to the critical path activity affected by the unusually severe weather for each month—during the monthly schedule update,based on the agreed number of calendar days for each month.

A contract modification (SF 30) for a time extension to the official contract completion date, due to unusually severe weather (if any), will be completed quarterly by the Contracting Officer based on the monthly evaluations.

3.6.1 Meeting attendance

The Contractor's Project Manager/Superintendent, Chief Quality Control, and Contractor's Scheduler, (as approved in paragraph B), shall attend the second monthly progress meeting. The onsite Government representatives shall be advised of the meetings location, time and date.

3.6.2 Update submission following progress meeting

A complete update of the entire NAS project progress schedule containing all approved revisions, and adjustments, based on the second monthly progress meeting, shall be submitted not later than 6 working days after the second monthly progress meeting, (if applicable).

3.6.3 Progress Meeting contents

3.6.3.1 Start and Finish Dates

The Actual Start and Actual Finish dates for each activity currently in-progress or completed.

3.6.3.2 Time Completion

The estimated Remaining Duration for each activity in-progress. Time-based progress calculations shall be based on Remaining Duration for each activity.

3.6.3.3 Cost Completion

The earnings for each activity started. Payment will be based on earnings for each in-progress or completed activity. Payment for individual activities will not be made for work that contains quality defects. A portion of the overall project amount may be retained based on delays of activities.

3.6.3.4 Logic Changes

All lo'3ic changes pertaining to NTP on change orders, change orders to be incorporated into the schedule, contractor proposed changes in work sequence, corrections to schedule logic for out-of-sequence progress, lag durations, and other changes that have been made pursuant to contract provisions shall be specifically identified and discussed.

3.6.3.5 Other Changes

Other changes required due to delays in completion of any activity or group of activities include: 1) delays beyond the Contractor's control, such as strikes and unusual weather. 2) delays encountered due to submittals, Government Activities, deliveries or work stoppages, which make re-planning the work necessary. 3) Changes required correcting a schedule, which does not represent the actual or planned prosecution and progress of the work.

3.7 REQUESTS FOR TIME EXTENSIONS

In the event the Contractor requests a time extension of the contract completion date, or any interim milestone date, the Contractor shall furnish the following for a determination as to whether or not the Contractor is entitled to an extension of time under the provisions of the contract: justification, project schedule data, and supporting evidence as the Contracting Officer may deem necessary. Submission of proof of delay shall be based on a subnet/fragnet of work activities, revised activity logic, duration, and costs (updated to the specific date that the delay occurred) is required for any time extension approvals. The project schedule shall clearly display that the Contractor has used, in full, all the float time available for the work involved with this request. Actual delays that are found to be caused by the Contractor's own actions, which result in the extension of the schedule, shall not be a cause for a time extension to the contract completion date.

3.7.1 Justification of Delay

The project schedule shall clearly display that the Contractor has used, in full, all the float time available for the work involved with this request.
The Contracting Officer's determination as to the number of allowable days of contract extension shall be based upon the project schedule updates in effect for the time period in question, and other factual information. Actual delays that are found to be caused by the Contractor's own actions, which result in the extension of the schedule, will not be a cause for a time extension to the contract completion date.

3.7.2 Submission Requirements –for time extension requests

The Contractor shall submit a comprehensive time analysis and justification for each "Request for Proposal" for a change in the contract, based upon the most recent approved schedule update at the time of the RFP issued. Such a time analysis and justification shall be in accordance with the requirements of other appropriate Contract Clauses and shall include, as a minimum:

a. A subnet/fragnet of activities indicating all new change activities and the affect on existing schedule activities.

b. A brief explanation of the causes of the change.

c. An analysis of the overall impact the subnet/fragnet has when applied to the current-updated approved NAS schedule.

Activities impacted in each justification for change shall be identified by a unique activity code contained in the required data file.

<u>Modifications to the contract</u>

Unpriced, unilateral and bilateral (without agreement on time) modifications

Upon receipt of the signed SF 30, for un-priced and unilateral modifications (or bilateral modifications with agreement on costs without an agreement on time, the Contractor shall submit proposed schedule revisions (in the form of a proposed subnet/fragnet) to the Contracting Officer for approval, within 14 days of the SF 30 being issued. The proposed (subnet/fragnet) revisions to the schedule will be approved by the Contracting Officer prior to application of those changes within the project schedule.

Should the contractor fail or refuse to submit the provisions, the Contracting Officer may furnish the Contractor suggested (subnet/fragnet) revisions to the project schedule.

Upon receipt, the Contractor shall include these subnet/fragnet revisions in the project schedule.

If the Contractor has any objections to the revisions furnished by the

Contracting Officer, the Contractor shall advise the Contracting Officer within 14 days of receipt of the revisions.

Regardless of the objections, the Contractor shall continue to update the schedule with the Contracting Officer's revisions until a mutual agreement on the revisions is reached.

If the Contractor fails to submit alternative revisions within 2 weeks of receipt of the Contracting officer's proposed revisions, the contractor will be deem to have concurred with the Contracting Officer's proposed revisions. The proposed revisions will be the basis for an "equitable adjustment" for performance of the work.

Bilateral modifications shall be entered into the NAS schedule, utilizing the subnet/fragnet as agreed during negotiations, immediately after receipt of signed SF 30. Entries to the schedule must be approved by Contracting Officer.

All modifications subnets/fragnets shall be applied to the NAS schedule immediately in the sequence in which they were finalized (received signed SF 30). The modification with time extension shall result in new work activities entered adjacent to the critical path work activity affected by the modification.

Weather time extensions must be included monthly upon receipt of the written results of the monthly weather evaluation from the Contracting Officer.

Ccontractor falls behind the approved project schedule

If the Contractor falls behind its approved schedule, (behind the LS/LF cash flow curve or more than 15 work days of negative float) or performs the work in such a manner that the network diagram and mathematical analysis no longer indicate reasonable logic and duration for completion of the work by the current contract completion date, as determined by the Contracting Officer, the Contractor shall promptly provide a supplemental NAS recovery or completion schedule for completion by the current completion date, by reducing the remaining durations, revising logic, or adjusting resources onsite (in addition to the original approved NAS schedule) as approved by the Contracting Officer. The supplemental schedule shall be (resource loaded with crew size and productivity for each remaining activity, and indicating overtime, weekend work, double shifts needed to regain the schedule), in accordance with FAR 52.236-15, without additional cost to the Government.
The supplement schedule shall not replace the original approved schedule as the official contract schedule. The original approved schedule shall be updated monthly (in addition to the supplemental schedule) and monitored by the contractor and the Contracting Officer to determine the effect of the supplemental schedule progress has on the contract progress to regain its rate of progress for timely completion as specified.

The Contractor shall not artificially improve its progress by revising the schedule logic restraints or shortening future work activity durations.
The contractor may improve its progress by performing sequential work activities concurrently or by performing activities more quickly than

planned, but such improvements shall be indicated on a supplement schedule and shall not be recorded on the official until they have actually been achieved by the contractor.
The additional resources required to improve the progress must be evident on the work site.

Failure of the contractor to perform work and maintain progress in accordance with the supplemental recovery or completion schedule, may result in an interim and final unsatisfactory performance rating and/or may result in corrective action by the contraction officer in accordance with FAR 52.236-15.

a. A list of affected activities, with their associated project schedule activity number.

b A brief explanation of the causes of the change

c. An analysis of the overall impact of the changes proposed

d. sub-network of the affected area

Activities impacted in each justification for change shall be identified by a unique activity code contained in the required data file.

3.7.3 Additional Submission Requirements

For any requested time extension of over 2 weeks, the Contracting Officer may request an interim update with revised activities for a specific change request. The Contractor shall provide this disk within 4 days of the Contracting Officer's request.

3.8 DIRECTED CHANGES

If the NTP is issued for changes prior to settlement of price and/or time, the Contractor shall submit proposed schedule revisions to the Contracting Officer: within 2 weeks of the NTP being issued. The proposed revisions to the schedule will be approved by the Contracting Officer prior to inclusion of those changes within the project schedule. If the Contractor fails to submit the proposed revisions, the Contracting Officer may furnish the Contractor with suggested revisions to the project schedule. The Contractor shall include these revisions in the project schedule until revisions are submitted, and final changes and impacts have been negotiated. If the Contractor has any objections to the revisions furnished by the Contracting Officer, the Contractor shall advise the Contracting Officer within 2 weeks of receipt of the revisions. Regardless of the objections, the Contractor shall continue to update the schedule with the Contracting Officer's revisions until a mutual agreement in the revisions is reached. If the Contractor fails to submit alternative revisions within 2 weeks of receipt of the Contracting Officer's proposed revisions, the Contractor will be deemed to have concurred with the Contracting Officer's proposed revisions. The proposed revisions will then be the basis for an equitable adjustment for performance of the work.

3.9 OWNERSHIP OF FLOAT

Float available in the schedule, at any time, shall not be considered for the exclusive use of either the Government or the Contractor.

End of Section

SECTION 01330

SUBMITTAL PROCEDURES

1.1 SUBMITTAL CLASSIFICATION

Submittals are identified with submittal description (SD) numbers and are classified as follows:

1.1.1 Government Approved

Governmental approval is required for extensions of design, critical materials, deviations, equipment whose compatibility with the entire system must be checked, and other items as designated by the Contracting Officer. Within the terms of the Contract Clause entitled "Specifications and Drawings for Construction," they are considered to be "shop drawings."

These items are tagged GA/AE or GA/RE in the submittal register.

The designer of record approves GA/AE review materials. This is usually an architectural-engineering design firm hired by the construction contractor. The Corps of Engineers construction resident engineer approves GA/RE review materials. This is usually a group of engineers who work for the installation’s resident engineer.

1.1.2 For Information Only (FIO)

All submittals not requiring Government approval will be for information only. These items are tagged FIO in the submittal register. They are not considered to be "shop drawings" within the terms of the Contract Clause referred to above.

1.2 APPROVED SUBMITTALS

The Contracting Officer's approval of submittals shall not be construed as a complete check, but will indicate only that the general method of construction, materials, detailing and other information are satisfactory.

Approval will not relieve the Contractor of the responsibility for any error, which may exist, as the Contractor under the CQC requirements of this contract is responsible for dimensions, the design of adequate connections and details, and the satisfactory construction of all work.

After submittals have been approved by the Contracting Officer, no re-submittal for the purpose of substituting materials or equipment will be considered unless accompanied by an explanation of why a substitution is necessary.

1.3 DISAPPROVED SUBMITTALS

The Contractor shall make all corrections required by the Contracting Officer and promptly furnish a corrected submittal in the form and number of copies specified for the initial submittal.

If the Contractor considers any correction indicated on the submittals to constitute a change to the contract, a notice in accordance with the Contract Clause "Changes" shall be given promptly to the Contracting Officer.

1.4 WITHHOLDING OF PAYMENT

Payment for materials incorporated in the work will not be made if required approvals have not been obtained.

2.1 GENERAL

The Contractor shall make submittals as required by the specifications. The Contracting Officer may request submittals in addition to those specified when deemed necessary to adequately describe the work covered in the respective sections. Units of weights and measures used on all submittals shall be the same as those used in the contract drawings. Each submittal shall be complete and in sufficient detail to allow ready determination of compliance with contract requirements.

Prior to submittal, all items {GA and FIO} shall be checked and approved by the Contractor's Quality Control (CQC) representative and each item shall be stamped, signed, and dated by the CQC representative indicating action taken.

Proposed deviations from the contract requirements shall be clearly identified.

Submittals shall include items such as: Contractor's, manufacturer's, or fabricator's drawings; descriptive literature including (but not limited to) catalog cuts, diagrams, operating charts or curves; test reports; test cylinders; samples; O&M manuals (including parts list); certifications; warranties; and other such required submittals.

Submittals requiring Government approval shall be scheduled and made prior to the acquisition of the material or equipment covered thereby.

Samples remaining upon completion of the work shall be picked up and disposed of in accordance with manufacturer's Material Safety Data Sheets (MSDS) and in compliance with existing laws and regulations.

2.2 SUBMITTAL REGISTER (ENG FORM 4288)

At the end of this section is one set of ENG Form 4288 listing items of equipment and materials for which submittals are required by the specifications; this list may not be all-inclusive and additional submittals may be required.

The Contractor will also be given the submittal register as a diskette containing the computerized ENG Form 4288 and instructions on the use of the diskette. Columns "d" through "r" have been completed by the Government; the Contractor shall complete columns "a" and "s" through "u" and submit the forms (hard copy plus associated electronic file) to the Contracting Officer for approval within 30 calendar days after Notice to Proceed.
The Contractor shall keep this diskette up-to-date and shall submit it to the Government together with the monthly payment request. The approved

submittal register will become the scheduling document and will be used to control submittals throughout the life of the contract.
The submittal register and the progress schedules shall be coordinated.

2.3 SCHEDULING

Submittals covering component items forming a system or items that are interrelated shall be scheduled to be coordinated and submitted concurrently.

All submittals for all interior finishes (wall, floor, ceiling), all base, casework, toilet partitions, window treatments and all other similar items requiring coordinated color selection shall be submitted concurrently. Certifications to be submitted with the pertinent drawings shall be so scheduled.

The contractor shall allow 30 calendar days, exclusive of mailing time, and this period shown on the submittal register and NAS schedule for submittals requiring Government review and approval.

No delay damages or time extensions will be allowed for time lost in late submittals or resubmittals.

An additional 10 calendar days shall be allowed and shown on the register and NAS schedule for the review and approval of submittals for food service equipment and refrigeration and HVAC control systems.

2.4 TRANSMITTAL FORM (ENG FORM 4025)

The sample transmittal form (ENG Form 4025) attached to this section shall be used for submitting both Government approved and for information only submittals in accordance with the instructions on the reverse side of the form. These forms will be furnished to the Contractor. This form shall be properly completed by filling out all the heading blank spaces and identifying each item submitted.

Special care shall be exercised to ensure proper listing of the specification paragraph and/or sheet number of the contract drawings pertinent to the data submitted for each item.

2.5 SUBMITTAL PROCEDURE

Submittals shall be made as follows:

2.5.1 Procedures

The Contractor shall be responsible for the scheduling and control of all submittals.

The Contractor is responsible for confirming that the submittal register includes all submittals required by the contract documents.

In addition to those items listed on ENG Form 4288, the Contractor will furnish submittals for any deviation from the plans or specifications. The scheduled need dates must be recorded on the document for each item for control purposes and critical items must be tied to the contractor's approved schedule where applicable.

The contractor shall prepare and submit a comprehensive (coordination) shop drawing including all mechanical and electrical materials and equipment on one consolidated and coordinated shop drawing, as specified in Section 01500 and submit to the Contracting Officer for approval (GA type submittal) 30 days prior to the start of any mechanical and electrical install of material and/or equipment within the spaces specified in section 01500.

The Contractor will submit to the Contracting Officer for approval five (5) copies of all G/AE or G/RE level and for all FIO level submittals. This number of copies of submittals specified in this portion of the contract shall be as specified in lieu of the number as specified by FAR 52.236-21.

For those contracts requiring project schedule--Network Analysis System (NAS), the Contractor will schedule on the NAS, critical or key items of material or equipment which the procurement activities will, or have the potential to, significantly impact project critical path and completion. The list of key or critical items of material or equipment and all GA type submittals. The list of submittals shall be submitted for approved by the Contracting Officer.

Where ENG Form 4025 must be submitted prior to approval of the Construction Progress Schedule, the Contractor shall submit an initial annotated ENG Form 4288 upon which dates for submittal, approval and delivery of procurement items shall be included for the first 60 days of the work.

Upon approval of the Construction Progress Schedule, or no later than 60 days after Notice to Proceed, the Contractor shall submit final annotated copies of ENG Form 4288-Submittal Register. Dates shall be coordinated with the approved Construction Progress Schedule to logically interface with the sequence of construction. Critical item numbers will be shown on the listing if NAS is required.

Furnishing the schedule shall not be interpreted as relieving the Contractor of his obligation to comply with all the specification requirements for the items on the schedule.

Contractor's Quality Control representative shall review the listing at least every 30 days and take appropriate action to maintain an effective system.

The Contractor shall furnish a list each 30 days of all submittals on which either Government's or Contractor's action is past due. This monthly list of delayed items shall also be annotated by the Contractor to show what corrective action he is taking with regard to slippages in submittal schedule that are attributable to actions by him, his subcontractors, or suppliers.

The Contractor shall provide updated submittal register data, electronically or on floppy disk, to the contracting Officer, monthly, indicating the current status and codes of all submittals in order update the master submittal register maintained by the Contracting Officer and to assure that the contractor’s schedule is being maintained.

He shall also furnish revised due dates in those cases when the original submittal schedule is no longer realistic.

The Contractor shall certify that each submittal is correct and in strict conformance with the contract drawings and specifications. All submittals not subject to the approval of the Contracting Officer will be submitted for Information purposes only, (FIO).

No Corps of Engineers action will be required for FIO submittals prior to incorporating these items into the work, but the submittal shall be furnished to the Area/Resident Engineer not less than 2 weeks prior to procurement of Contractor certified material, equipment, etc.

These Contractor approved submittals (FIO), will be used to verify that material received and used in the job is the same as that described and approved and will be used as record copies.

All samples of materials submitted as required by these specifications shall be properly identified and labeled for ready identification, and upon being certified by the Contractor and reviewed by the Contracting Officer, shall be stored at the site of the work for job site use until all work has been completed and accepted by the Contracting Officer.

Delegation of this approval authority to Contractor Quality Control does not relieve the Contractor from the obligation to conform to any contract requirement and will not prevent the Contracting Officer from requiring removal and replacement of construction not in contract conformance; nor does it relieve the Contractor from the requirement to furnish "samples" for testing by the Government Laboratory or check testing by the Government in those instances where the technical specifications so prescribe.

Contractor certified drawings will be subject to quality assurance review by the Government at any time during the duration of the contract.

No adjustment for time or money will be allowed for corrections required as a result of noncompliance with plans and specifications.

Submittals Requiring Government Approval (G/AE Level or G/RE Level). Where the review authority is designated to the Government, the Contractor is required to sign the certification on ENG Form 4025 in the box beside the remarks block in Section I. The Government will code the items in block h and sign the approval action block in Section II as the approving authority.

Operating and Maintenance Instructions. Six (6) complete sets of instructions containing the manufacturer's operating and maintenance instructions for each piece of equipment shall be furnished. Each set shall be permanently bound and shall have a hard cover.

One (1) complete set shall be furnished at the time test procedures are submitted.

Remaining sets shall be furnished to the Contracting Officer on the date of final/acceptance inspection of the project.
The following identification shall be inscribed on the covers: The words "OPERATING AND MAINTENANCE INSTRUCTIONS," name and location of the facility, name of the Contractor, and contract number. Flysheets shall be placed before instructions covering each subject. Instruction sheets shall be approximately 8-1/2 by 11 inches, with large sheets of drawings folded in. Instructions shall include but are not limited to:

(1) System layout showing piping, valves and controls;

(2) Approved wiring and control diagrams;

(3) A control sequence describing startup, operation and shutdown;

(4) Operating and maintenance instructions for each piece of equipment, including lubrication instructions and troubleshooting guide; and

(5) Manufacturer's bulletins, cuts and descriptive data; parts lists and recommended parts.

2.5.2 Deviations

For submittals, which include proposed deviations requested by the Contractor, the column "variation" of ENG Form 4025 shall be checked. The Contractor shall set forth in writing the reason for any deviations and annotate such deviations on the submittal.

The Government reserves the right to rescind inadvertent approval of submittals containing unnoted deviations.

The contractor is not authorized to take action on an approved deviation until the deviation is included in a final contract modification.

2.6 CONTROL OF SUBMITTALS

The Contractor shall carefully control his procurement operations to ensure that each individual submittal is made on or before the Contractor scheduled submittal date shown on the approved "Submittal Register."

2.7 GOVERNMENT APPROVED SUBMITTALS

Upon completion of review of submittals requiring Government approval, the submittals will be identified as having received approval by being so stamped and dated.

Three (3) copies of the GA submittals will be retained by the Contracting Officer and two (2) copies of the submittal will be returned to the Contractor-within the time specified-with action code.

Submittals requiring re-submittal to the Government are due immediately upon receipt by the contractor to avoid contractor delay to the project.

2.8 INFORMATION ONLY SUBMITTALS

Three (3) copies of the submittal will be retained by the Contracting Officer and two (2) copies returned to the contractor.

Not all FIO submittals will be reviewed by the Government. This Government review will be a quality assurance review only of a sample of the entire number of submittals.
Approval of the Contracting Officer is not required on information only submittals. The Government reserves the right to require the Contractor to resubmit any item found not to comply with the contract.
This does not relieve the Contractor from the obligation to furnish material conforming to the plans and specifications; will not prevent the Contracting

Officer from requiring removal and replacement of nonconforming material incorporated in the work; and does not relieve the Contractor of the requirement to furnish samples for testing by the Government laboratory or for check testing by the Government in those instances where the technical specifications so prescribe.

FIO submittals noted for re-submittal to the Government for clarification or additional data are due immediately upon receipt by the contractor.

2.9 STAMPS

Stamps used by the Contractor on the submittal data to certify that the submittal meets contract requirements shall be similar to the following:

CONTRACTOR

(Firm Name)

_____ Approved

_____ Approved with corrections as noted on submittal data and/or attached sheets(s).

SIGNATURE: _____

TITLE: _____

DATE: _____

--End of Section--

SUBMITTAL REGISTER

CONTRACT NO.

TITLE AND LOCATION
TUAV MAINTENANCE FACILITY, FT. STEWART, GA

CONTRACTOR

ACTIVITY NO	TRANSMITTAL NO	SPEC SECT	DESCRIPTION ITEM SUBMITTED	PARAG# RAPH	CLASSIFICATION	GOVT OR A/E REVWR	CONTRACTOR: SCHEDULE DATES			CONTRACTOR ACTION			APPROVING AUTHORITY					MAILED TO CONTR/ DATE RCD FRM APPR AUTH	REMARKS
							SUBMIT	APPROVAL NEEDED BY	MATERIAL NEEDED BY	ACTION CODE	DATE OF ACTION	DATE FWD TO APPR AUTH/ DATE RCD FROM CONTR	DATE FWD TO OTHER REVIEWER	DATE RCD FROM OTH REVIEWER	ACTION CODE	DATE OF ACTION		
(a)	(b)	(c)	(d)	(e)	(f)		(g)	(h)	(i)	(j)	(k)	(l)	(m)	(n)	(o)	(p)	(q)	(r)
		01330	SD-01 Preconstruction Submittals															
			Submittal register	1.3.1	G													
		01335	SD-01 Preconstruction Submittals															
			SPiRiT Compliance Plan		G	RO												
			SD-05 Design Data															
			SPiRiT Calculations		G	RO												
			SD-11 Closeout Submittals															
			SPiRiT Documentation Notebook		G	RO												
		01354	SD-01 Preconstruction Submittals															
			Erosion and Sediment Control		G	RE												
			Plan															
			Stormwater Management Plan		G	RE												
			Notice of Intent		G	RE												
			Notice of Termination		G	RE												
		01780	SD-02 Shop Drawings															
			As-Built Drawings		G	RE												
			SD-03 Product Data															
			As-Built Record of Equipment and		G	RE												
			Materials															
			Warranty Management Plan		G	RE												
			Warranty Tags		G	RE												
			Final Cleaning		G	RE												
		02220	SD-07 Certificates															
			Notifications	1.4.1	FIO													
		02231	SD-03 Product Data															
			Nonsaleable Materials	3.6.2	G													

SUBMITTAL REGISTER

CONTRACT NO.

TITLE AND LOCATION
TUAV MAINTENANCE FACILITY, FT. STEWART, GA

CONTRACTOR

ACTIVITY NO	TRANSMITTAL NO	SPEC SECT	DESCRIPTION ITEM SUBMITTED	PARAG# RAPH	CLASSIFICATION	GOVT OR A/E REVWR	CONTRACTOR: SCHEDULE DATES			CONTRACTOR ACTION			APPROVING AUTHORITY					
							SUBMIT	APPROVAL NEEDED BY	MATERIAL NEEDED BY	ACTION CODE	DATE OF ACTION	DATE FWD TO APPR AUTH/ DATE RCD FROM CONTR	DATE FWD TO OTHER REVIEWER	DATE RCD FROM OTH REVIEWER	ACTION CODE	DATE OF ACTION	MAILED TO CONTR/ DATE RCD FRM APPR AUTH	REMARKS
(a)	(b)	(c)	(d)	(e)	(f)		(g)	(h)	(i)	(j)	(k)	(l)	(m)	(n)	(o)	(p)	(q)	(r)
		02231	SD-04 Samples															
			Tree wound paint	2.1	FIO													
		02300	SD-05 Design Data															
			Earthwork		FIO													
			SD-06 Test Reports															
			Testing	3.13	FIO													
			SD-07 Certificates															
			Testing	3.13	G RE													
		02315	SD-06 Test Reports															
			Field Density Tests		FIO													
			Testing of Fill and Backfill		FIO													
			Materials															
			Inspection, Equipment and		FIO													
			Corrective Action Reports															
			SD-07 Certificates															
			Certificates of Compliance		FIO													
			Testing		G RO													
		02316	SD-04 Samples															
			Tracer Wire	3.3.6	G RO													
			SD-06 Test Reports															
			Field Density Tests	3.4.3	FIO													
			Testing of Fill and Backfill		FIO													
			Materials															
			SD-07 Certificates															
			Testing		G RO													
		02364	SD-08 Manufacturer's Instructions															

SUBMITTAL REGISTER

CONTRACT NO.

TITLE AND LOCATION
TUAV MAINTENANCE FACILITY, FT. STEWART, GA

CONTRACTOR

ACTIVITY NO	TRANSMITTAL NO	SPEC SECT	DESCRIPTION ITEM SUBMITTED	PARAG# RAPH	CLASSIFICATION	GOVT OR A/E REVWR	CONTRACTOR: SCHEDULE DATES			CONTRACTOR ACTION			APPROVING AUTHORITY					
							SUBMIT	APPROVAL NEEDED BY	MATERIAL NEEDED BY	ACTION CODE	DATE OF ACTION	DATE FWD TO APPR AUTH/ DATE RCD FROM CONTR	DATE FWD TO OTHER REVIEWER	DATE RCD FROM OTH REVIEWER	ACTION CODE	DATE OF ACTION	MAILED TO CONTR/ DATE RCD FRM APPR AUTH	REMARKS
(a)	(b)	(c)	(d)	(e)	(f)		(g)	(h)	(i)	(j)	(k)	(l)	(m)	(n)	(o)	(p)	(q)	(r)
		02364	Termiticides	2.1	FIO													
			SD-05 Design Data															
			Equipment	1.3	FIO													
			Equipment	3.4.1	FIO													
			Foundation Exterior	3.2.3	FIO													
			Utilities and Vents	3.2.4	FIO													
			Soil Moisture	3.3.1	FIO													
			Verification of Measurement	3.5	FIO													
			SD-06 Test Reports															
			Equipment Calibration and Tank	3.4.1	FIO													
			Calibration															
			SD-07 Certificates															
			Qualifications	1.2	FIO													
			SD-04 Samples															
			Termiticides	2.1	FIO													
			SD-03 Product Data															
			Termiticide Application Plan		FIO													
		02510A	SD-03 Product Data															
			Installation	3.1	FIO													
			Waste Water Disposal Method		FIO													
			Satisfactory Installation		FIO													
			SD-06 Test Reports															
			Bacteriological Disinfection		FIO													
			SD-07 Certificates															
			Installation	3.1	FIO													
		02531	SD-02 Shop Drawings															

SUBMITTAL REGISTER

CONTRACT NO.

TITLE AND LOCATION
TUAV MAINTENANCE FACILITY, FT. STEWART, GA

CONTRACTOR

ACTIVITY NO	TRANSMITTAL NO	SPEC SECT	DESCRIPTION ITEM SUBMITTED	PARAG# RAPH	CLASSIFICATION	GOVT OR A/E REVWR	CONTRACTOR: SCHEDULE DATES			CONTRACTOR ACTION			APPROVING AUTHORITY					
							SUBMIT	APPROVAL NEEDED BY	MATERIAL NEEDED BY	ACTION CODE	DATE OF ACTION	DATE FWD TO APPR AUTH/ DATE RCD FROM CONTR	DATE FWD TO OTHER REVIEWER	DATE RCD FROM OTH REVIEWER	ACTION CODE	DATE OF ACTION	MAILED TO CONTR/ DATE RCD FRM APPR AUTH	REMARKS
(a)	(b)	(c)	(d)	(e)	(f)		(g)	(h)	(i)	(j)	(k)	(l)	(m)	(n)	(o)	(p)	(q)	(r)
		02531	Precast concrete manhole	2.3.1	FIO													
			Metal items	2.3.4	FIO													
			Frames, covers, and gratings	2.3.4.1	FIO													
			SD-03 Product Data															
			Pipeline materials	2.1	FIO													
			SD-07 Certificates															
			Portland Cement	2.2.2	FIO													
		02532A	SD-06 Test Reports															
			Hydrostatic Tests	3.2	FIO													
		02722A	SD-03 Product Data															
			Plant, Equipment, and Tools	1.7	FIO													
			Waybills and Delivery Tickets		FIO													
			SD-06 Test Reports															
			Sampling and testing	1.5	FIO													
			Field Density Tests	1.5.2.4	FIO													
		02741A	SD-03 Product Data															
			Mix Design	2.3	G	RO												
			Contractor Quality Control	3.10	G	RO												
			Material Acceptance	3.11	G	RO												
			SD-06 Test Reports															
			Aggregates	2.1	G	RO												
			QC Monitoring	3.10.3.10	FIO													
			SD-07 Certificates															
			Asphalt Cement Binder	2.2	G	RO												
			Testing Laboratory	3.6	FIO													
		02748A	SD-06 Test Reports															

SUBMITTAL REGISTER

CONTRACT NO.

TITLE AND LOCATION
TUAV MAINTENANCE FACILITY, FT. STEWART, GA

CONTRACTOR

ACTIVITY NO	TRANSMITTAL NO	SPEC SECT	DESCRIPTION ITEM SUBMITTED	PARAG# RAPH	CLASSIFICATION	GOVT OR A/E REVWR	CONTRACTOR: SCHEDULE DATES			CONTRACTOR ACTION			APPROVING AUTHORITY					REMARKS
							SUBMIT	APPROVAL NEEDED BY	MATERIAL NEEDED BY	ACTION CODE	DATE OF ACTION	DATE FWD TO APPR AUTH/ DATE RCD FROM CONTR	DATE FWD TO OTHER REVIEWER	DATE RCD FROM OTH REVIEWER	ACTION CODE	DATE OF ACTION	MAILED TO CONTR/ DATE RCD FRM APPR AUTH	
(a)	(b)	(c)	(d)	(e)	(f)		(g)	(h)	(i)	(j)	(k)	(l)	(m)	(n)	(o)	(p)	(q)	(r)
		02748A	Sampling and Testing	3.7	FIO													
		02754A	SD-03 Product Data															
			Equipment	1.7	FIO													
			Paving	3.4	FIO													
			Mixture Proportions	2.11	FIO													
		02770A	SD-06 Test Reports															
			Field Quality Control	3.8	FIO													
		02821A	SD-07 Certificates															
			Chain Link Fence	2.1.1	FIO													
		02921A	SD-03 Product Data															
			Equipment	3.1.3	FIO													
			Surface Erosion Control Material	2.8	FIO													
			Chemical Treatment Material	1.4.3	FIO													
			Delivery	1.4.1	FIO													
			Finished Grade and Topsoil	3.2.1	FIO													
			Topsoil	2.2	FIO													
			Quantity Check	3.5	FIO													
			Seed Establishment Period	3.9	FIO													
			Maintenance Record	3.9.3.5	FIO													
			Application of Pesticide	3.6	FIO													
			SD-04 Samples															
			Delivered Topsoil	1.4.1.1	FIO													
			Soil Amendments	2.3	FIO													
			Mulch	2.4	FIO													
			SD-06 Test Reports															
			Equipment Calibration	3.1.3	FIO													

SUBMITTAL REGISTER

CONTRACT NO.

TITLE AND LOCATION
TUAV MAINTENANCE FACILITY, FT. STEWART, GA

CONTRACTOR

ACTIVITY NO	TRANSMITTAL NO	SPEC SECT	DESCRIPTION ITEM SUBMITTED	PARAG# RAPH	CLASSIFICATION	GOVT OR A/E REVWR	CONTRACTOR: SCHEDULE DATES			CONTRACTOR ACTION			APPROVING AUTHORITY					
							SUBMIT	APPROVAL NEEDED BY	MATERIAL NEEDED BY	ACTION CODE	DATE OF ACTION	DATE FWD TO APPR AUTH/ DATE RCD FROM CONTR	DATE FWD TO OTHER REVIEWER	DATE RCD FROM OTH REVIEWER	ACTION CODE	DATE OF ACTION	MAILED TO CONTR/ DATE RCD FRM APPR AUTH	REMARKS
(a)	(b)	(c)	(d)	(e)	(f)		(g)	(h)	(i)	(j)	(k)	(l)	(m)	(n)	(o)	(p)	(q)	(r)
		02921A	Soil Test	3.1.4	FIO													
			SD-07 Certificates															
			Seed	2.1	FIO													
			Topsoil	2.2	FIO													
			pH Adjuster	2.3.1	FIO													
			Fertilizer	2.3.2	FIO													
			Organic Material	2.3.4	FIO													
			Soil Conditioner	2.3.5	FIO													
			Mulch	2.4	FIO													
			Pesticide	2.7	FIO													
		02922A	SD-03 Product Data															
			Equipment	3.1.3	FIO													
			Chemical Treatment Material	1.4.3.2	FIO													
			Delivery	1.4.1	FIO													
			Finished Grade and Topsoil	3.2.1	FIO													
			Topsoil	2.2	FIO													
			Quantity Check	3.5	FIO													
			Sod Establishment Period	3.9	FIO													
			Maintenance Record	3.9.3.5	FIO													
			Application of Pesticide	3.6	FIO													
			SD-04 Samples															
			Delivered Topsoil	1.4.1.2	FIO													
			Soil Amendments	2.3	FIO													
			SD-06 Test Reports															
			Equipment Calibration	3.1.3	FIO													
			Soil Test	3.1.4	FIO													

SUBMITTAL REGISTER

CONTRACT NO.

TITLE AND LOCATION
TUAV MAINTENANCE FACILITY, FT. STEWART, GA

CONTRACTOR

ACTIVITY NO	TRANSMITTAL NO	SPEC SECT	DESCRIPTION ITEM SUBMITTED	PARAG# RAPH	CLASSIFICATION	GOVT OR A/E REVWR	CONTRACTOR: SCHEDULE DATES			CONTRACTOR ACTION			APPROVING AUTHORITY					
							SUBMIT	APPROVAL NEEDED BY	MATERIAL NEEDED BY	ACTION CODE	DATE OF ACTION	DATE FWD TO APPR AUTH/ DATE RCD FROM CONTR	DATE FWD TO OTHER REVIEWER	DATE RCD FROM OTH REVIEWER	ACTION CODE	DATE OF ACTION	MAILED TO CONTR/ DATE RCD FRM APPR AUTH	REMARKS
(a)	(b)	(c)	(d)	(e)	(f)		(g)	(h)	(i)	(j)	(k)	(l)	(m)	(n)	(o)	(p)	(q)	(r)
		02922A	SD-07 Certificates															
			Sod	2.1	FIO													
			Topsoil	2.2	FIO													
			pH Adjuster	2.3.1	FIO													
			Fertilizer	2.3.2	FIO													
			Organic Material	2.3.4	FIO													
			Soil Conditioner	2.3.5	FIO													
			Pesticide	2.5	FIO													
		03307A	SD-03 Product Data															
			Air-Entraining Admixture	2.1.3.1	FIO													
			Accelerating Admixture		FIO													
			Water-Reducing or Retarding Admixture	2.1.3.3	FIO													
			Curing Materials	2.1.12	FIO													
			Reinforcing Steel	2.1.5	FIO													
			Expansion Joint Filler Strips, Premolded	2.1.6	FIO													
			Joint Sealants - Field Molded Sealants	2.1.7	FIO													
			Batching and Mixing Equipment		FIO													
			Conveying and Placing Concrete	3.2	FIO													
			Formwork	2.1.9	FIO													
			SD-06 Test Reports															
			Aggregates	2.1.2	FIO													
			Concrete Mixture Proportions	1.4.3	G RO													
			SD-07 Certificates															

SUBMITTAL REGISTER

CONTRACT NO.

TITLE AND LOCATION
TUAV MAINTENANCE FACILITY, FT. STEWART, GA

CONTRACTOR

ACTIVITY NO	TRANSMITTAL NO	SPEC SECT	DESCRIPTION ITEM SUBMITTED	PARAG# RAPH	CLASSIFICATION	GOVT OR A/E REVWR	CONTRACTOR: SCHEDULE DATES			CONTRACTOR ACTION			APPROVING AUTHORITY					
							SUBMIT	APPROVAL NEEDED BY	MATERIAL NEEDED BY	ACTION CODE	DATE OF ACTION	DATE FWD TO APPR AUTH/ DATE RCD FROM CONTR	DATE FWD TO OTHER REVIEWER	DATE RCD FROM OTH REVIEWER	ACTION CODE	DATE OF ACTION	MAILED TO CONTR/ DATE RCD FRM APPR AUTH	REMARKS
(a)	(b)	(c)	(d)	(e)	(f)		(g)	(h)	(i)	(j)	(k)	(l)	(m)	(n)	(o)	(p)	(q)	(r)
		03307A	Cementitious Materials	2.1.1	FIO													
			Aggregates	2.1.2	FIO													
		04200	SD-03 Product Data															
			Water-Repellant Admixture	2.9	FIO													
			Cold Weather Installation	3.1.2	FIO													
			SD-06 Test Reports															
			Field Testing of Mortar	3.26.1	G RO													
			Field Testing of Grout	3.23.2	G RO													
			Masonry Cement	2.8.4	FIO													
			SD-07 Certificates															
			Concrete Masonry Units (CMU)	2.4	FIO													
			Anchors, Ties, and Bar	2.11	FIO													
			Positioners															
			Joint Reinforcement	2.12	FIO													
			Reinforcing Steel Bars and Rods	2.13	FIO													
			Masonry Cement	2.8.4	FIO													
			Precast Concrete Items	2.5	FIO													
			Admixtures for Masonry Mortar	2.8.1	FIO													
			Admixtures for Grout	2.10.1	FIO													
			SD-08 Manufacturer's Instructions															
			Masonry Cement	2.8.4	FIO													
		05400	SD-02 Shop Drawings															
			Framing Components		G													
			SD-03 Product Data															
			studs,joists	2.1	FIO													
			SD-07 Certificates															

SUBMITTAL REGISTER

CONTRACT NO.

TITLE AND LOCATION
TUAV MAINTENANCE FACILITY, FT. STEWART, GA

CONTRACTOR

ACTIVITY NO	TRANSMITTAL NO	SPEC SECT	DESCRIPTION ITEM SUBMITTED	PARAG# RAPH	CLASSIFICATION	GOVT OR A/E REVWR	CONTRACTOR: SCHEDULE DATES			CONTRACTOR ACTION			APPROVING AUTHORITY					REMARKS
							SUBMIT	APPROVAL NEEDED BY	MATERIAL NEEDED BY	ACTION CODE	DATE OF ACTION	DATE FWD TO APPR AUTH/ DATE RCD FROM CONTR	DATE FWD TO OTHER REVIEWER	DATE RCD FROM OTH REVIEWER	ACTION CODE	DATE OF ACTION	MAILED TO CONTR/ DATE RCD FRM APPR AUTH	
(a)	(b)	(c)	(d)	(e)	(f)		(g)	(h)	(i)	(j)	(k)	(l)	(m)	(n)	(o)	(p)	(q)	(r)
		05400	Load-bearing cold-formed metal	1.4	FIO													
			framing															
		05500A	SD-02 Shop Drawings															
			Miscellaneous Metal Items	1.6	FIO													
		06100A	SD-07 Certificates															
			Grading and Marking	2.1.1	FIO													
			Insulation	2.3	FIO													
		07840	SD-02 Shop Drawings															
			Firestopping Materials	2.1	FIO													
			SD-07 Certificates															
			Firestopping Materials	2.1	FIO													
			Installer Qualifications	1.5	FIO													
			Inspection	3.3	FIO													
		07900A	SD-03 Product Data															
			Backing	2.1	FIO													
			Bond-Breaker	2.2	FIO													
			Sealant	2.5	FIO													
			SD-07 Certificates															
			Sealant	2.5	FIO													
		08110	SD-02 Shop Drawings															
			Doors	2.1	FIO													
			Doors	2.1	FIO													
			Frames	2.7	FIO													
			Frames	2.7	FIO													
			Accessories	2.5	FIO													
			SD-03 Product Data															

SUBMITTAL REGISTER

CONTRACT NO.

TITLE AND LOCATION
TUAV MAINTENANCE FACILITY, FT. STEWART, GA

CONTRACTOR

ACTIVITY NO	TRANSMITTAL NO	SPEC SECT	DESCRIPTION ITEM SUBMITTED	PARAG# RAPH	CLASSIFICATION	GOVT OR A/E REVWR	CONTRACTOR: SCHEDULE DATES			CONTRACTOR ACTION			APPROVING AUTHORITY					
							SUBMIT	APPROVAL NEEDED BY	MATERIAL NEEDED BY	ACTION CODE	DATE OF ACTION	DATE FWD TO APPR AUTH/ DATE RCD FROM CONTR	DATE FWD TO OTHER REVIEWER	DATE RCD FROM OTH REVIEWER	ACTION CODE	DATE OF ACTION	MAILED TO CONTR/ DATE RCD FRM APPR AUTH	REMARKS
(a)	(b)	(c)	(d)	(e)	(f)		(g)	(h)	(i)	(j)	(k)	(l)	(m)	(n)	(o)	(p)	(q)	(r)
		08110	Doors	2.1	FIO													
			Frames	2.7	FIO													
			Accessories	2.5	FIO													
		08330A	SD-02 Shop Drawings															
			Approved Detail Drawings	3.1	FIO													
			Installation	3.1	FIO													
			SD-03 Product Data															
			Overhead Rolling Doors	2.1	FIO													
			SD-06 Test Reports															
			Tests	3.3	G RE													
			SD-07 Certificates															
			Fire Doors		FIO													
			SD-10 Operation and Maintenance															
			Data															
			Operation and Maintenance	1.6	FIO													
			Manuals															
		08710	SD-02 Shop Drawings															
			Hardware schedule	1.3	G AE													
			Keying system	2.3.8	FIO													
			SD-03 Product Data															
			Hardware items	2.3	G AE													
			SD-08 Manufacturer's Instructions															
			Installation	3.1	FIO													
			SD-10 Operation and Maintenance															
			Data															
			Hardware Schedule	1.3	G RO													

SUBMITTAL REGISTER

CONTRACT NO.

TITLE AND LOCATION
TUAV MAINTENANCE FACILITY, FT. STEWART, GA

CONTRACTOR

ACTIVITY NO	TRANSMITTAL NO	SPEC SECT	DESCRIPTION ITEM SUBMITTED	PARAG# RAPH	CLASSIFICATION	GOVT OR A/E REVWR	CONTRACTOR: SCHEDULE DATES			CONTRACTOR ACTION			APPROVING AUTHORITY					MAILED TO CONTR/ DATE RCD FRM APPR AUTH	REMARKS
							SUBMIT	APPROVAL NEEDED BY	MATERIAL NEEDED BY	ACTION CODE	DATE OF ACTION	DATE FWD TO APPR AUTH/ DATE RCD FROM CONTR	DATE FWD TO OTHER REVIEWER	DATE RCD FROM OTH REVIEWER	ACTION CODE	DATE OF ACTION		
(a)	(b)	(c)	(d)	(e)	(f)		(g)	(h)	(i)	(j)	(k)	(l)	(m)	(n)	(o)	(p)	(q)	(r)
		08710	SD-11 Closeout Submittals															
			Key bitting	1.4	FIO													
		09100N	SD-02 Shop Drawings															
			Metal support systems	2.1	FIO													
		09250	SD-03 Product Data															
			Cementitious backer units		FIO													
			Exterior Gypsum Soffit Board	2.4.7	FIO													
			Accessories	2.1.14	FIO													
			SD-07 Certificates															
			Asbestos Free Materials	2.1	G RO													
		09510	SD-03 Product Data															
			Acoustical Ceiling Systems		FIO													
			SD-07 Certificates															
			Acoustical Units	2.1	FIO													
		09650	SD-03 Product Data															
			Resilient Flooring and	2.17	FIO													
			Accessories															
			Adhesives	2.13	FIO													
			SD-04 Samples															
			Resilient Flooring and	2.17	FIO													
			Accessories															
			SD-06 Test Reports															
			Moisture, Alkalinity and Bond	3.3	FIO													
			Tests															
			SD-08 Manufacturer's Instructions															
			Surface Preparation	3.2	FIO													

SUBMITTAL REGISTER

CONTRACT NO.

TITLE AND LOCATION
TUAV MAINTENANCE FACILITY, FT. STEWART, GA

CONTRACTOR

ACTIVITY NO	TRANSMITTAL NO	SPEC SECT	DESCRIPTION ITEM SUBMITTED	PARAG# RAPH	CLASSIFICATION	GOVT OR A/E REVWR	CONTRACTOR: SCHEDULE DATES			CONTRACTOR ACTION			APPROVING AUTHORITY					
							SUBMIT	APPROVAL NEEDED BY	MATERIAL NEEDED BY	ACTION CODE	DATE OF ACTION	DATE FWD TO APPR AUTH/ DATE RCD FROM CONTR	DATE FWD TO OTHER REVIEWER	DATE RCD FROM OTH REVIEWER	ACTION CODE	DATE OF ACTION	MAILED TO CONTR/ DATE RCD FRM APPR AUTH	REMARKS
(a)	(b)	(c)	(d)	(e)	(f)		(g)	(h)	(i)	(j)	(k)	(l)	(m)	(n)	(o)	(p)	(q)	(r)
		09650	Installation	3.1	FIO													
			SD-10 Operation and Maintenance															
			Data															
			Resilient Flooring and	2.17	FIO													
			Accessories															
		09900	SD-02 Shop Drawings															
			Piping identification	3.12	FIO													
			stencil	3.12	FIO													
			SD-03 Product Data															
			Coating	2.1	G A/E													
			Manufacturer's Technical Data	2.1	FIO													
			Sheets															
			SD-04 Samples															
			Color	1.9	G AE													
			SD-07 Certificates															
			Applicator's qualifications	1.3	FIO													
			Qualification Testing	1.4.1.2	G RO													
			SD-08 Manufacturer’s Instructions															
			Application instructions		FIO													
			Mixing	3.8.2	FIO													
			Manufacturer's Material Safety	1.7.2	FIO													
			Data Sheets															
			SD-10 Operation and Maintenance															
			Data															
			Coatings	2.1	G RO													
		10153	SD-02 Shop Drawings															

SUBMITTAL REGISTER

CONTRACT NO.

TITLE AND LOCATION
TUAV MAINTENANCE FACILITY, FT. STEWART, GA

CONTRACTOR

ACTIVITY NO	TRANSMITTAL NO	SPEC SECT	DESCRIPTION ITEM SUBMITTED	PARAGRAPH #	CLASSIFICATION	GOVT OR A/E REVWR	CONTRACTOR: SCHEDULE DATES			CONTRACTOR ACTION			APPROVING AUTHORITY					
							SUBMIT	APPROVAL NEEDED BY	MATERIAL NEEDED BY	ACTION CODE	DATE OF ACTION	DATE FWD TO APPR AUTH/ DATE RCD FROM CONTR	DATE FWD TO OTHER REVIEWER	DATE RCD FROM OTH REVIEWER	ACTION CODE	DATE OF ACTION	MAILED TO CONTR/ DATE RCD FRM APPR AUTH	REMARKS
(a)	(b)	(c)	(d)	(e)	(f)		(g)	(h)	(i)	(j)	(k)	(l)	(m)	(n)	(o)	(p)	(q)	(r)
		10153	Installation	3.1	FIO													
			SD-03 Product Data															
			Toilet Partition System	1.3	FIO													
			SD-04 Samples															
			Colors and Finishes	2.5	FIO													
		10800	SD-03 Product Data															
			Finishes	2.1.2	FIO													
			Accessory Items	2.2	FIO													
			SD-07 Certificates															
			Accessory Items	2.2	FIO													
		11310A	SD-02 Shop Drawings															
			Equipment Installation	3.1	G RE													
			SD-03 Product Data															
			Materials and Equipment	2.1	FIO													
			Framed Instructions	3.5	FIO													
			Spare Parts	1.5	FIO													
			SD-06 Test Reports															
			Field Testing and Adjusting	3.3	FIO													
			Equipment															
			SD-10 Operation and Maintenance															
			Data															
			Operating and Maintenance	3.6	G RE													
			Manuals															
		13080	SD-02 Shop Drawings															
			Bracing	3.1	FIO													

SUBMITTAL REGISTER

CONTRACT NO.

TITLE AND LOCATION
TUAV MAINTENANCE FACILITY, FT. STEWART, GA

CONTRACTOR

ACTIVITY NO	TRANSMITTAL NO	SPEC SECT	DESCRIPTION ITEM SUBMITTED	PARAGRAPH #	CLASSIFICATION GOVT OR A/E REVWR	CONTRACTOR: SCHEDULE DATES SUBMIT	APPROVAL NEEDED BY	MATERIAL NEEDED BY	CONTRACTOR ACTION ACTION CODE	DATE OF ACTION	DATE FWD TO APPR AUTH/ DATE RCD FROM CONTR	APPROVING AUTHORITY DATE FWD TO OTHER REVIEWER	DATE RCD FROM OTH REVIEWER	ACTION CODE	DATE OF ACTION	MAILED TO CONTR/ DATE RCD FRM APPR AUTH	REMARKS
(a)	(b)	(c)	(d)	(e)	(f)	(g)	(h)	(i)	(j)	(k)	(l)	(m)	(n)	(o)	(p)	(q)	(r)
		13080	Resilient Vibration Isolation	3.4	FIO												
			Devices														
			Equipment Requirements	1.4	FIO												
			SD-03 Product Data														
			Bracing	3.1	FIO												
			Equipment Requirements	1.4	FIO												
		13100A	SD-02 Shop Drawings														
			Drawings		G RE												
			SD-07 Certificates														
			Materials	2.1	G RE												
		13121A	SD-02 Shop Drawings														
			Drawings		G AE												
			SD-03 Product Data														
			Manufacturer's Instructions	3.1.6	FIO												
			Qualifications	1.3.2	G AE												
			SD-07 Certificates														
			Metal Building Systems		G RE												
			Insulation	2.7	FIO												
		13851A	SD-02 Shop Drawings														
			Fire Alarm Reporting System	1.4.1	G RE												
			SD-03 Product Data														
			Storage Batteries	2.2	G RE												
			Voltage Drop		G RE												
			Special Tools and Spare Parts	2.7.4	G RE												
			Technical Data and Computer	1.4	G RE												
			Software														

SUBMITTAL REGISTER

CONTRACT NO.

TITLE AND LOCATION
TUAV MAINTENANCE FACILITY, FT. STEWART, GA

CONTRACTOR

ACTIVITY NO	TRANSMITTAL NO	SPEC SECT	DESCRIPTION ITEM SUBMITTED	PARAGRAPH #	CLASSIFICATION	GOVT OR A/E REVWR	CONTRACTOR: SCHEDULE DATES			CONTRACTOR ACTION			APPROVING AUTHORITY					MAILED TO CONTR/ DATE RCD FRM APPR AUTH	REMARKS
							SUBMIT	APPROVAL NEEDED BY	MATERIAL NEEDED BY	ACTION CODE	DATE OF ACTION	DATE FWD TO APPR AUTH/ DATE RCD FROM CONTR	DATE FWD TO OTHER REVIEWER	DATE RCD FROM OTH REVIEWER	ACTION CODE	DATE OF ACTION		
(a)	(b)	(c)	(d)	(e)	(f)		(g)	(h)	(i)	(j)	(k)	(l)	(m)	(n)	(o)	(p)	(q)	(r)
		13851A	Training	3.6	G RE													
			Testing	3.5	G RE													
			SD-06 Test Reports															
			Testing	3.5	G RE													
			SD-07 Certificates															
			Equipment	1.4.6	FIO													
			Qualifications	1.3.7	G RE													
			SD-10 Operation and Maintenance															
			Data															
			Technical Data and Computer	1.4	G RE													
			Software															
		13930A	SD-02 Shop Drawings															
			Shop Drawings	1.12	G AE													
			As-Built Drawings	3.11	FIO													
			SD-03 Product Data															
			Fire Protection Related Submittals	3.1	FIO													
			Sway Bracing	3.4.1	G AE													
			Materials and Equipment	2.3	G AE													
			Hydraulic Calculations	1.7	G AE													
			Spare Parts	1.11	FIO													
			Preliminary Tests	3.10	G RO													
			Final Acceptance Test	3.11	G RO													
			On-site Training	3.12	G RO													
			Fire Protection Specialist	1.8	G													
			RO		FIO													
			Sprinkler System Installer	1.9	G RO													

SUBMITTAL REGISTER

CONTRACT NO.

TITLE AND LOCATION
TUAV MAINTENANCE FACILITY, FT. STEWART, GA

CONTRACTOR

ACTIVITY NO	TRANSMITTAL NO	SPEC SECT	DESCRIPTION ITEM SUBMITTED	PARAG# RAPH	CLASSIFICATION	GOVT OR A/E REVWR	CONTRACTOR: SCHEDULE DATES			CONTRACTOR ACTION			APPROVING AUTHORITY					MAILED TO CONTR/ DATE RCD FRM APPR AUTH	REMARKS
							SUBMIT	APPROVAL NEEDED BY	MATERIAL NEEDED BY	ACTION CODE	DATE OF ACTION	DATE FWD TO APPR AUTH/ DATE RCD FROM CONTR	DATE FWD TO OTHER REVIEWER	DATE RCD FROM OTH REVIEWER	ACTION CODE	DATE OF ACTION		
(a)	(b)	(c)	(d)	(e)	(f)		(g)	(h)	(i)	(j)	(k)	(l)	(m)	(n)	(o)	(p)	(q)	(r)
		13930A	SD-06 Test Reports															
			Preliminary Test Report	3.11	G													
			RO		FIO													
			Final Acceptance Test Report	3.11	G RO													
			SD-07 Certificates															
			Inspection by Fire Protection	3.3	G RO													
			Specialist															
			SD-10 Operation and Maintenance															
			Data															
			Operating and Maintenance	3.12	FIO													
			Instructions															
		15070A	SD-02 Shop Drawings															
			Coupling and Bracing	3.1	FIO													
			Flexible Couplings or Joints	3.3	FIO													
			Equipment Requirements	1.3	FIO													
			Contractor Designed Bracing	1.2.4	G RO													
			SD-03 Product Data															
			Coupling and Bracing	3.1	G RO													
			Equipment Requirements	1.3	G RO													
			Contractor Designed Bracing	1.2.4	G RO													
			SD-07 Certificates															
			Flexible Ball Joints	2.2	FIO													
		15080A	SD-02 Shop Drawings															
			Mica Plates	3.2.2.4	FIO													
			SD-03 Product Data															
			General Materials	2.1	FIO													

SUBMITTAL REGISTER

CONTRACT NO.

TITLE AND LOCATION
TUAV MAINTENANCE FACILITY, FT. STEWART, GA

CONTRACTOR

ACTIVITY NO	TRANSMITTAL NO	SPEC SECT	DESCRIPTION ITEM SUBMITTED	PARAG# RAPH	CLASSIFICATION	GOVT OR A/E REVWR	CONTRACTOR: SCHEDULE DATES			CONTRACTOR ACTION			APPROVING AUTHORITY					
							SUBMIT	APPROVAL NEEDED BY	MATERIAL NEEDED BY	ACTION CODE	DATE OF ACTION	DATE FWD TO APPR AUTH/ DATE RCD FROM CONTR	DATE FWD TO OTHER REVIEWER	DATE RCD FROM OTH REVIEWER	ACTION CODE	DATE OF ACTION	MAILED TO CONTR/ DATE RCD FRM APPR AUTH	REMARKS
(a)	(b)	(c)	(d)	(e)	(f)		(g)	(h)	(i)	(j)	(k)	(l)	(m)	(n)	(o)	(p)	(q)	(r)
		15182	SD-03 Product Data															
			Refrigerant Piping System	2.3	FIO													
			Refrigerant Piping Tests	3.3	FIO													
			SD-06 Test Reports															
			Refrigerant Piping Tests	3.3	FIO													
		15400A	SD-02 Shop Drawings															
			Plumbing System	3.9.1	G RO													
			Electrical Work	1.4	G RO													
			SD-03 Product Data															
			Welding	1.5.1	FIO													
			Plumbing Fixture Schedule	3.10	FIO													
			Vibration-Absorbing Features		G RO													
			Plumbing System	3.9.1	FIO													
			SD-06 Test Reports															
			Tests, Flushing and Disinfection	3.9	FIO													
			Test of Backflow Prevention	3.9.1.1	G RO													
			Assemblies															
			SD-07 Certificates															
			Materials and Equipment	1.3	FIO													
			Bolts	2.1.1	FIO													
			SD-10 Operation and Maintenance															
			Data															
			Plumbing System	3.9.1	G RO													
		15566A	SD-02 Shop Drawings															
			Heating Equipment		FIO													
			SD-03 Product Data															

SUBMITTAL REGISTER

CONTRACT NO.

TITLE AND LOCATION
TUAV MAINTENANCE FACILITY, FT. STEWART, GA

CONTRACTOR

ACTIVITY NO	TRANSMITTAL NO	SPEC SECT	DESCRIPTION ITEM SUBMITTED	PARAGRAPH #	CLASSIFICATION	GOVT OR A/E REVWR	CONTRACTOR: SCHEDULE DATES			CONTRACTOR ACTION			APPROVING AUTHORITY					REMARKS
							SUBMIT	APPROVAL NEEDED BY	MATERIAL NEEDED BY	ACTION CODE	DATE OF ACTION	DATE FWD TO APPR AUTH/ DATE RCD FROM CONTR	DATE FWD TO OTHER REVIEWER	DATE RCD FROM OTH REVIEWER	ACTION CODE	DATE OF ACTION	MAILED TO CONTR/ DATE RCD FRM APPR AUTH	
(a)	(b)	(c)	(d)	(e)	(f)		(g)	(h)	(i)	(j)	(k)	(l)	(m)	(n)	(o)	(p)	(q)	(r)
		15566A	Heating Equipment		FIO													
			SD-10 Operation and Maintenance															
			Data															
			Heating Equipment		FIO													
		15700A	SD-03 Product Data															
			Unitary Equipment	2.6	FIO													
			Spare Parts Data		FIO													
			SD-07 Certificates															
			Unitary Equipment	2.6	FIO													
			Service Organization	2.1	FIO													
			SD-10 Operation and Maintenance															
			Data															
			Operation Manuals		FIO													
			Maintenance Manuals		FIO													
		15895	SD-02 Shop Drawings															
			Drawings	3.1.9	FIO													
			Installation	3.1	FIO													
			SD-03 Product Data															
			Components and Equipment	2.1	FIO													
			Test Procedures		FIO													
			Performance Tests	3.7	FIO													
			SD-06 Test Reports															
			Performance Tests	3.7	FIO													
			Testing, Adjusting, and Balancing	3.6	FIO													
			SD-10 Operation and Maintenance															
			Data															

SUBMITTAL REGISTER

CONTRACT NO.

TITLE AND LOCATION
TUAV MAINTENANCE FACILITY, FT. STEWART, GA

CONTRACTOR

ACTIVITY NO	TRANSMITTAL NO	SPEC SECT	DESCRIPTION ITEM SUBMITTED	PARAG# RAPH	CLASSIFICATION	GOVT OR A/E REVWR	CONTRACTOR: SCHEDULE DATES			CONTRACTOR ACTION			APPROVING AUTHORITY					MAILED TO CONTR/ DATE RCD FRM APPR AUTH	REMARKS
							SUBMIT	APPROVAL NEEDED BY	MATERIAL NEEDED BY	ACTION CODE	DATE OF ACTION	DATE FWD TO APPR AUTH/ DATE RCD FROM CONTR	DATE FWD TO OTHER REVIEWER	DATE RCD FROM OTH REVIEWER	ACTION CODE	DATE OF ACTION		
(a)	(b)	(c)	(d)	(e)	(f)		(g)	(h)	(i)	(j)	(k)	(l)	(m)	(n)	(o)	(p)	(q)	(r)
		15895	Operating and Maintenance	3.9	FIO													
			Instructions															
		15990A	SD-02 Shop Drawings															
			TAB Schematic Drawings and	3.3	G RO													
			Report Forms															
			SD-03 Product Data															
			TAB Related HVAC Submittals	3.2	FIO													
			TAB Procedures	3.5.1	G RO													
			Calibration	1.4	FIO													
			Systems Readiness Check	3.5.2	FIO													
			TAB Execution	3.5.1	G RO													
			TAB Verification	3.5.4	G RO													
			SD-06 Test Reports															
			Design Review Report	3.1	G RO													
			Systems Readiness Check	3.5.2	G RO													
			TAB Report	3.5.3	G RO													
			TAB Verification Report	3.5.4	G RO													
			SD-07 Certificates															
			TAB Firm	1.5.1	G RO													
			TAB Specialist	1.5.2	G RO													
		15995A	SD-03 Product Data															
			Commissioning Team	3.1	FIO													
			Tests	3.2	FIO													
			Pre-Commissioning Checks	3.2.1	FIO													
			GRO		FIO													
			SD-06 Test Reports															

SUBMITTAL REGISTER

CONTRACT NO.

TITLE AND LOCATION
TUAV MAINTENANCE FACILITY, FT. STEWART, GA

CONTRACTOR

ACTIVITY NO	TRANSMITTAL NO	SPEC SECT	DESCRIPTION ITEM SUBMITTED	PARAG# RAPH	CLASSIFICATION	GOVT OR A/E REVWR	CONTRACTOR: SCHEDULE DATES			CONTRACTOR ACTION			APPROVING AUTHORITY					
							SUBMIT	APPROVAL NEEDED BY	MATERIAL NEEDED BY	ACTION CODE	DATE OF ACTION	DATE FWD TO APPR AUTH/ DATE RCD FROM CONTR	DATE FWD TO OTHER REVIEWER	DATE RCD FROM OTH REVIEWER	ACTION CODE	DATE OF ACTION	MAILED TO CONTR/ DATE RCD FRM APPR AUTH	REMARKS
(a)	(b)	(c)	(d)	(e)	(f)		(g)	(h)	(i)	(j)	(k)	(l)	(m)	(n)	(o)	(p)	(q)	(r)
		15995A	Test Reports	3.2	G													
		16070A	SD-02 Shop Drawings															
			Lighting Fixtures in Buildings	3.2	FIO													
			Equipment Requirements	1.4	FIO													
			SD-03 Product Data															
			Lighting Fixtures in Buildings	3.2	G RO													
			Equipment Requirements	1.4	G RO													
			Contractor Designed Bracing	1.3.4	G RO													
		16370A	SD-02 Shop Drawings															
			Electrical Distribution System	3.11.3	G RE													
			As-Built Drawings		G RE													
			SD-03 Product Data															
			Nameplates		FIO													
			Material and Equipment	2.2	FIO													
			General Installation Requirements	3.1	FIO													
			SD-06 Test Reports															
			Factory Tests		FIO													
			Field Testing	3.11	FIO													
			Operating Tests	3.11.9	G RE													
			SD-07 Certificates															
			Material and Equipment	2.2	FIO													
			SD-10 Operation and Maintenance															
			Data															
			Electrical Distribution System	3.11.3	G RE													
		16375A	SD-02 Shop Drawings															
			Electrical Distribution System		G RE													

SUBMITTAL REGISTER

CONTRACT NO.

TITLE AND LOCATION
TUAV MAINTENANCE FACILITY, FT. STEWART, GA

CONTRACTOR

ACTIVITY NO	TRANSMITTAL NO	SPEC SECT	DESCRIPTION ITEM SUBMITTED	PARAG# RAPH	CLASSIFICATION	GOVT OR A/E REVWR	CONTRACTOR: SCHEDULE DATES			CONTRACTOR ACTION			APPROVING AUTHORITY					
							SUBMIT	APPROVAL NEEDED BY	MATERIAL NEEDED BY	ACTION CODE	DATE OF ACTION	DATE FWD TO APPR AUTH/ DATE RCD FROM CONTR	DATE FWD TO OTHER REVIEWER	DATE RCD FROM OTH REVIEWER	ACTION CODE	DATE OF ACTION	MAILED TO CONTR/ DATE RCD FRM APPR AUTH	REMARKS
(a)	(b)	(c)	(d)	(e)	(f)		(g)	(h)	(i)	(j)	(k)	(l)	(m)	(n)	(o)	(p)	(q)	(r)
		16375A	As-Built Drawings		G	RE												
			SD-03 Product Data															
			Protective Device		G	RE												
			Material and Equipment	2.1	G	RE												
			General Installation Requirements	3.1	FIO													
			SD-06 Test Reports															
			Cable Installation	3.2.1.4	G	RE												
			SD-07 Certificates															
			Material and Equipment	2.1	FIO													
			Cable Installer Qualifications		G	RE												
		16415A	SD-02 Shop Drawings															
			Interior Electrical Equipment		G	RE												
			SD-03 Product Data															
			Manufacturer's Catalog		G	RE												
			Material, Equipment, and Fixture		FIO													
			Lists															
			Installation Procedures		FIO													
			As-Built Drawings	1.2.6	G	RE												
			Onsite Tests	3.24.2	G	RE												
			SD-06 Test Reports															
			Factory Test Reports		G	RE												
			Field Test Plan		G	RE												
			Field Test Reports	3.22	G	RE												
			SD-07 Certificates															
			Materials and Equipment	1.4	FIO													
		16710A	SD-02 Shop Drawings															

SUBMITTAL REGISTER

CONTRACT NO.

TITLE AND LOCATION
TUAV MAINTENANCE FACILITY, FT. STEWART, GA

CONTRACTOR

ACTIVITY NO	TRANSMITTAL NO	SPEC SECT	DESCRIPTION ITEM SUBMITTED	PARAG# RAPH	CLASSIFICATION	GOVT OR A/E REVWR	CONTRACTOR: SCHEDULE DATES			CONTRACTOR ACTION			APPROVING AUTHORITY					MAILED TO CONTR/ DATE RCD FRM APPR AUTH	REMARKS
							SUBMIT	APPROVAL NEEDED BY	MATERIAL NEEDED BY	ACTION CODE	DATE OF ACTION	DATE FWD TO APPR AUTH/ DATE RCD FROM CONTR	DATE FWD TO OTHER REVIEWER	DATE RCD FROM OTH REVIEWER	ACTION CODE	DATE OF ACTION		
(a)	(b)	(c)	(d)	(e)	(f)		(g)	(h)	(i)	(j)	(k)	(l)	(m)	(n)	(o)	(p)	(q)	(r)
		16710A	Premises Distribution System	1.7	G RE													
			Installation	3.1	G RE													
			SD-03 Product Data															
			Record Keeping and	1.8	G RE													
			Documentation															
			Spare Parts	3.1.9	G RE													
			Manufacturer's Recommendations		G RE													
			Test Plan	3.6	G RE													
			Qualifications	1.5	G RE													
			SD-06 Test Reports															
			Test Reports	3.6	G RE													
			SD-07 Certificates															
			Premises Distribution System	1.7	FIO													
			Materials and Equipment	2.1	FIO													
			Installers	1.5.1	G RE													
		16711A	SD-02 Shop Drawings															
			Record Drawings		G RE													
			SD-03 Product Data															
			Acceptance Tests		G RE													
		16900	SD-02 Shop Drawings															
			Control System Layout		G RE													
			Control System Wiring Diagrams		G RE													
			SD-03 Product Data															
			Autonomous Control Unit		G RE													
			Autonomous Control Unit		G RE													
			Transceiver															

SUBMITTAL REGISTER

CONTRACT NO.

TITLE AND LOCATION
TUAV MAINTENANCE FACILITY, FT. STEWART, GA

CONTRACTOR

ACTIVITY NO	TRANSMITTAL NO	SPEC SECT	DESCRIPTION ITEM SUBMITTED	PARAGRAPH #	CLASSIFICATION	GOVT OR A/E REVWR	CONTRACTOR: SCHEDULE DATES			CONTRACTOR ACTION			APPROVING AUTHORITY					MAILED TO CONTR/ DATE RCD FRM APPR AUTH	REMARKS
							SUBMIT	APPROVAL NEEDED BY	MATERIAL NEEDED BY	ACTION CODE	DATE OF ACTION	DATE FWD TO APPR AUTH/ DATE RCD FROM CONTR	DATE FWD TO OTHER REVIEWER	DATE RCD FROM OTH REVIEWER	ACTION CODE	DATE OF ACTION		
(a)	(b)	(c)	(d)	(e)	(f)		(g)	(h)	(i)	(j)	(k)	(l)	(m)	(n)	(o)	(p)	(q)	(r)
		16900	Speaker/Strobe Devices		G	RE												
			Antennas and cables		G	RE												
			Static Discharge Units		G	RE												
			SD-05 Design Data															
			System Design		G	RE												
			SD-06 Test Reports															
			Final acceptance test.		G	RE												
			SD-07 Certificates															
			Qualifications Data		FIO													
			SD-10 Operation and Maintenance															
			Data															
			Autonomous Control Unit		G	RE												
			Autonomous Control Unit		G	RE												
			Transceiver															

SECTION TABLE OF CONTENTS

DIVISION 01 - GENERAL REQUIREMENTS

SECTION 01335

SUSTAINABLE DESIGN AND DEVELOPMENT (SPiRiT)

05/04

PART 1 GENERAL

1.1 REFERENCES
1.2 DESCRIPTION
1.3 SUBMITTALS
1.4 DOCUMENTATION REQUIREMENTS
1.4.1 Omitted
1.4.2 SPiRiT credit 3.R1 Fundamental Building System Commissioning
1.4.3 SPiRiT credit 4.C2 Construction Waste Management
1.4.4 Omitted
1.4.5 SPiRiT credit 4.C4 Recycled Content.
1.4.6 credit 4.C5 Local/Regional Materials
1.4.7 Omitted
1.4.8 Omitted
1.4.9 SPiRiT credit 5.C3 Construction IAQ Management Plan

PART 2 PRODUCTS (Not Used)

PART 3 EXECUTION (Not Uawd)

-- End of Section Table of Contents --

SAVH-01335 (May 2004)

SECTION 01335

SUSTAINABLE DESIGN AND DEVELOPMENT (SPiRiT)

05/04

PART 1 GENERAL

1.1 REFERENCES

The publications listed below form a part of this specification to the extent referenced. The publications are referred to within the text by the basic designation only.

SHEET METAL & AIR CONDITIONING CONTRACTORS' NATIONAL ASSOCIATION (SMACNA)

SMACNA IAQ Guidelines	(1995) Indoor Air Quality (IAQ) Guidelines for Occupied Buildings During Construction

U.S. GREEN BUILDING COUNCIL (usgbc.org)

LEED GBRG	LEED Green Building Reference Guide, Version 2.

1.2 DESCRIPTION

This project has been designed for, and shall be constructed for a sustainable rating of bronze in accordance with SPiRiT 1.4.1. Table 01335-1 through Table 01335-3 identifies the SPiRiT credit items that are designed into or otherwise required for this project. No variations or substitutions to the SPiRiT credits identified for this contract shall be allowed without written consent from the Contracting Officer. Should there be a case where there is any problem meeting the full requirements of a SPiRiT credit identified for this project in Table 01335-1 through Table 01335-3, the Contractor must bring this to the attention of the Contracting Officer immediately.

The Contractor shall provide and assemble under separate cover documentation verifying compliance with SPiRiT requirements as listed in this specification and as otherwise identified within the Technical Specifications. Some SPiRiT credits are inherent in the design provided and require no further submittal or documentation. However, the Contractor shall become familiar with these requirements and parameters important to their development so that no action contrary to the design intent is inadvertently taken during construction. Other SPiRiT credits involve material selection and are generally identified within the Technical Specification with the notation "SDD", though not specifically identified in all occurrences. The remaining SPiRiT credits are dependent on construction practices, procurement data or cumulative calculations of components of materials throughout the project.

All SPiRiT credits identified in Table 01335-1 through Table 01335-3 under

the columns Material Selection "SDD" and Construction Related shall be documented by the Contractor. Table 01335-1 through Table 01335-3 provide a general summary of types of action/submittals required and provide specification references. Detailed documentation on submittal requirements are contained in the Technical Specifications and paragraph 1.4 below. Some of the SPiRiT points may have common traits between items inherent in the design and those involving material selection or construction related items. In this case, the Contractor shall only document those items pertaining to material selection or construction related items.

In all cases where a material, product or execution requirement is identified as a sustainable feature ("SDD") elsewhere in the contract documents, additional data or certificates shall be submitted with the individual component or process validating the material or component to the respected SPiRiT credit item. This additional data or certificates shall be separable from the other submitted data for inclusion into the SPiRiT Documentation Notebooks.

1.3 SUBMITTALS

Government approval is required for submittals with a "G" designation; submittals not having a "G" designation are for information only or as otherwise designated. When used, a designation following the "G" designation identifies the office that will review the submittal for the Government. The following shall be submitted in accordance with Section 01330 SUBMITTAL PROCEDURES:

SD-01 Preconstruction Submittals

SPiRiT Compliance Plan; G, RO

A detailed plan identifying all construction practices, procurement data or cumulative calculations of components required for SPiRiT credit that must be identified and tracked during the course of construction. Plan shall indicate the SPiRiT credit being tracked or documented, individual components of the SPiRiT credit related items, dates of submittal of individual components of the SPiRiT credit related items, and proposed method of tracking in accordance with SPiRiT 1.4.1 and LEED GBRG.

SD-05 Design Data

SPiRiT Calculations;G, RO

Calculations showing compliance with a required SPiRiT credit where identified in Table 01335-1 through Table 01335-3 or within the SPiRiT Compliance Plan. Calculations shall be current and available for review monthly. Final calculations should be included in the SPiRiT Documentation Notebook under the appropriate tab.

SD-11 Closeout Submittals

SPiRiT Documentation Notebook;G, RO

The Contractor shall prepare two comprehensive notebooks documenting each SPiRiT credit identified in Table 01335-1 through Table 01335-3 for material selection where "SDD" is indicated and final calculations, certifications for construction practices,

procurement data or cumulative calculations of components of materials throughout the project, and other items as identified in the SPiRiT Compliance Plan. Notebook must contain all required data to support full compliance with the indicated SPiRiT credit. SPiRiT credits that are indicated as inherent to the design will be document by the designer of record.

SPiRiT Documentation Notebooks shall be formatted to match SPiRiT numbering system and tabbed for each point. Notebooks shall be kept current on a weekly basis and at least one set shall be available on the jobsite at all times. If the Contractor fails to maintain the SPiRiT Documentation Notebooks as specified herein, the Contracting Officer will retain from the monthly progress payment an amount representing the estimated cost of maintaining these Notebooks. This monthly deduction will continue until an agreement can be reached between the Contracting Officer and the Contractor regarding the accuracy and completeness of the Notebooks.

1.4 DOCUMENTATION REQUIREMENTS

SPiRiT credits as identified in Table 01335-1 through Table 01335-3 shall be incorporated and documented as required by the Technical Specifications and in full compliance with SPiRiT 1.4.1 and LEED GBRG. Spirit Credits not identified elsewhere in the Technical Specifications, or those requiring further instruction are listed below.

1.4.1 Omitted

1.4.2 SPiRiT credit 3.R1 Fundamental Building System Commissioning

Individual component commissioning requirements are specified in the Technical Specifications where required. The Contractor shall group all reports and results of commissioning into this requirement for Building Systems Commissioning. Refer to LEED Reference Manual.

1.4.3 SPiRiT credit 4.C2 Construction Waste Management

Notwithstanding the requirements of Section 01572 CONSTRUCTION AND DEMOLITION WASTE MANAGEMENT, the Contractor shall include in his SPiRiT Compliance Plan a waste management plan that complies with the requirements of SPiRiT credit 4.C2 to the point level listed in Table 01335-1 through Table 01335-3 for recycling and/or salvage of at least 50% (by weight) of construction, demolition and land clearing waste. The plan should include proposed worksheets for tracking the value used and record keeping requirements for documentation to validate the final value. Refer to SPiRiT 1.4.1 and LEED GBRG for definitions and requirements. For this point performance is measured for entire project (not split out by facility type).

1.4.4 Omitted

1.4.5 SPiRiT credit 4.C4 Recycled Content.

Notwithstanding the requirements of Section 01670 RECYCLED/RECOVERED MATERIALS promoting the use of recycled or recovered materials, the Contractor shall include in his SPiRiT Compliance Plan a method of tracking and recordkeeping (by dollar value) of building materials used in this project that contain in aggregate a minimum weighted average of 20%

post-consumer recycled content material, or a minimum weighted average of 40% post-industrial recycled content material. The plan should include proposed worksheets similar to that shown as Attachment B for tracking the value used and record keeping requirements for documentation to validate the final value. Refer to SPiRiT 1.4.1 and LEED GBRG for definitions, exclusions and requirements. Project goal is 25% but there is no penalty for failure to reach goal for this project point performance is measured for entire project (not split out by facility type).

1.4.6 credit 4.C5 Local/Regional Materials

The Contractor shall include in his SPiRiT Compliance Plan a method of tracking and recordkeeping (by dollar value) of building products used in this project that are manufactured regionally within a radius of 500 miles. The plan should include proposed worksheets for tracking the value used and record keeping requirements for documentation to validate the final value. Refer to SPiRiT 1.4.1 and LEED GBRG for definitions, exclusions and requirements. Project goal is 20% but there is no penalty for failure to reach goal for this point performance is measured for entire project (not split out by facility type).

1.4.7 Omitted
1.4.8 Omitted

1.4.9 SPiRiT credit 5.C3 Construction IAQ Management Plan

The Contractor shall include in his SPiRiT Compliance Plan a Construction Indoor Air Quality (IAQ) Management Plan for the construction and pre-occupancy phases of the building that, during construction, meets or exceeds the minimum requirements of SMACNA IAQ Guidelines, AND protects stored on-site or installed absorptive materials from moisture damage, AND replaces all filtration media immediately prior to occupancy. Additionally, the plan shall provide for a minimum two-week building flushout period with new filtration media at 100% outside air after construction ends and prior to occupancy, OR, conduct a baseline indoor air quality testing procedure consistent with current EPA protocol for Environmental Requirements, Baseline IAQ and Materials, for the Research Triangle Park Campus, Section 01445. Refer to SPiRiT 1.4.1 and LEED GBRG for definitions and requirements.

PART 2 PRODUCTS (Not Used)

PART 3 EXECUTION (Not Uawd)

-- End of Section --

Sustainable Project Rating Tool (SPiRiT)

Version 1.4.1

For

TUAV Storage Maintenance Facility
Evans Field
Ft. Stewart, GA

U. S. Army Corps of Engineers
U. S. Army Assistant Chief of Staff for Installation Management

Corrected Final Design Submittal

August 13, 2004

TUAV Storage Maintenance Facility, Evans Field, Ft. Stewart, GA

Facility Points Summary

1.0	**Sustainable Sites (S)**	**Score**	**8**	**Max 20**
1.R1	❑ Erosion, Sedimentation and Water Quality Control		R	[Required]
1.C1	❑ Site Selection		1	2
1.C2	❑ Installation/Base Redevelopment		1	2
1.C3	❑ Brownfield Redevelopment		0	1
1.C4	❑ Alternative Transportation		1	4
1.C5	❑ Reduced Site Disturbance		2	2
1.C6	❑ Stormwater Management		1	2
1.C7	❑ Landscape and Exterior Design to Reduce Heat Islands		1	2
1.C8	❑ Light Pollution Reduction		0	1
1.C9	❑ Optimize Site Features		0	1
1.C10	❑ Facility Impact		1	2
1.C11	❑ Site Ecology		0	1
2.0	**Water Efficiency (W)**	**Score**	**0**	**Max 5**
2.C1	❑ Water Efficient Landscaping		0	2
2.C2	❑ Innovative Wastewater Technologies		0	1
2.C3	❑ Water Use Reduction		0	2
3.0	**Energy and Atmosphere (E)**	**Score**	**2**	**Max 28**
3.R1	❑ Fundamental Building Systems Commissioning		R	[Required]
3.R2	❑ Minimum Energy Performance		R	[Required]
3.R3	❑ CFC Reduction in HVAC&R Equipment		R	[Required]
3.C1	❑ Optimize Energy Performance		2	20
3.C2	❑ Renewable Energy		0	4
3.C3	❑ Additional Commissioning		0	1
3.C4	❑ <<Deleted>>		0	
3.C5	❑ Measurement and Verification		0	1
3.C6	❑ Green Power		0	1
3.C7	❑ Distributed Generation		0	1
4.0	**Materials and Resources (M)**	**Score**	**3**	**Max 13**
4.R1	❑ Storage & Collection of Recyclables		R	[Required]
4.C1	❑ Building Reuse		0	3
4.C2	❑ Construction Waste Management		1	2
4.C3	❑ Resource Reuse		0	2
4.C4	❑ Recycled Content		1	2
4.C5	❑ Local/Regional Materials		1	2
4.C6	❑ Rapidly Renewable Materials		0	1
4.C7	❑ Certified Wood		0	1
5.0	**Indoor Environmental Quality (IEQ) [Q]**	**Score**	**6**	**Max 17**
5.R1	❑ Minimum IAQ Performance		R	[Required]
5.R2	❑ Environmental Tobacco Smoke (ETS) Control		R	[Required]
5.C1	❑ IAQ Monitoring		0	1
5.C2	❑ Increase Ventilation Effectiveness		1	1
5.C3	❑ Construction IAQ Management Plan		0	2
5.C4	❑ Low-Emitting Materials		3	4
5.C5	❑ Indoor Chemical and Pollutant Source Control		0	1
5.C6	❑ Controllability of Systems		0	2
5.C7	❑ Thermal Comfort		1	2
5.C8	❑ Daylight and Views		1	2
5.C9	❑ Acoustic Environment /Noise Control		0	1
5.C10	❑ Facility In-Use IAQ Management Plan		0	1

TUAV Storage Maintenance Facility, Evans Field, Ft. Stewart, GA

Facility Points Summary (Continued)				Maximum Points
6.0	**Facility Delivery Process (P)**	**Score**	**2**	**Max 7**
6.C1	❑ Holistic Delivery of Facility		2	7
7.0	**Current Mission**	**Score**	**4**	**Max 6**
7.C1	❑ Operation and Maintenance		2	3
7.C2	❑ Soldier and Workforce Productivity and Retention		2	3
8.0	**Future Missions**	**Score**	**2**	**Max 4**
8.C1	❑ Functional Life of Facility and Supporting Systems		1	2
8.C2	❑ Adaptation, Renewal and Future Uses		1	2
		Total Score	**27**	**Max 100**

SPiRiT Sustainable Project Certification Levels

SPiRiT Bronze	**X**	**25 to 34 Points**
SPiRiT Silver		**35 to 49 Points**
SPiRiT Gold		**50 to 74 Points**
SPiRiT Platinum		**75 to 100 Points**

Project Points of Contact

Designer of Record:

TranSystems Corporation

Tom Morgan

Tel: (407) 644-6777

Fax: (407) 740-7337

01354

EROSION AND SEDIMENTAION CONTROL

1.1 SUMMARY: The purpose of this narrative is to outline the requirements, enforcement and violations, for all Erosion and Sediment Control plans, (E&S), Stormwater Management, Notice of Intent, (NOI), and Notice of Termination, (NOT), to be submitted with all construction projects, on the Fort Stewart/Hunter Army Airfield.

1.1.1 Erosion and Sediment Control plans – Submitted to DPW upon awarding of contract, reviewed by USDA-NRCS. M**ust be approved** before land-disturbance of any kind can proceed. (Exhibit 1)

1.1.2 Notice of Intent – Contractor to send this form, with the land-disturbance permit, from USDA-NRCS, to Georgia EPD,

Coastal District- Brunswick Office
Georgia Environmental Protection Division
One Conservation Way
Brunswick, GA 31520-8687
(912) 264-7284

14 days in advance of any land disturbing activities. Land-disturbance permit requires three (3) signatures, A) USDA-NRCS, B) DPW representative, C) Contractor responsible for work. Notice of Intent is required for **Stormwater management**. (Exhibit 2)

1.1.3 Notice of Termination – To be submitted to, Georgia EPD,

Coastal District- Brunswick Office
Georgia Environmental Protection Division
One Conservation Way
Brunswick, GA 31520-8687
(912) 264-7284

by Contractor upon site being 70% stabilized. Concurrence is needed from the COR or PM and USDA-NRCS, and Environmental.
(Exhibit 3)

1.1.4 Time line for documentation:

1. E&S plan submitted to ER&S, DPW.
2. E&S plan reviewed NRCS.
3. Upon E&S plan approval contractor will be notified by DPW.

Contractor to send NOI to the State of Georgia, Environmental Protection Division, 14 days prior to start date. Copies of notification to be sent to:

DPW – Vic Maulden, Chief EP&SD
CHIEF ENGINEER PLAN and SERVICES DIVISION (BLDG 1114)
DIRECTORATE of PUBLIC WORKS (USDA-NRCS)
HQS 3D IN DIV (MECH) AND FORT STEWART, SUITE 101
1117 FRANK COCHRAN DRIVE
FORT STEWART, GA. 31314-4940

Environmental - Tressa M. Rutland
Environmental Branch
Directorate of Public Works, Bldg. 1137

1550 Frank Cochran Drive
Fort Stewart, Georgia 31314-4927

NRCS – James Freeman
CHIEF ENGINEER PLAN and SERVICES DIVISION (BLDG 1114)
DIRECTORATE of PUBLIC WORKS (USDA-NRCS)
HQS 3D IN DIV (MECH) AND FORT STEWART, SUITE 101
1117 FRANK COCHRAN DRIVE
FORT STEWART, GA. 31314-4940

NOTE - project cannot begin until these items have been completed.

1.2 REFERENCES: The publication listed below form a part of this specification to the extent referenced. The publication is referred to in the text by basic designation only.

Manual for Erosion and Sediment Control of Georgia, 5th Edition - http://www.gaswcc.org/

Environmental Protection Agency - http://www.state.ga.us/dnr/environ/

Part 2

2.1 MINIMUM REQUIREMENTS FOR EROSION AND SEDIMENTATION CONTROL USING BEST MANAGEMENT PRACTICES

2.1.1 GENERAL PROVISIONS: Excessive soil erosion and resulting sedimentation can take place during land-disturbing activities. Therefore, plans for those land-disturbing activities, which are not excluded by this ordinance, shall contain provisions for application of soil erosion and sedimentation control measures and practices. The provisions shall be incorporated into the erosion and sedimentation control plans. **Soil erosion and sedimentation control measures and practices shall conform to the minimum requirements of Section 2.2 of this ordinance**. The application of measures and practices shall apply to all features of the site, including street and utility installations, drainage facilities and other temporary and permanent improvements. Measures shall be installed to prevent or control erosion and sedimentation pollution during all stages of any land-disturbing activity.

2.2 MINIMUM REQUIREMENTS/ Best Management Practices, (BMP's)

2.2.1. Best management practices, as set forth in Section 2.2 of this ordinance shall be required for all land-disturbing activities. Proper design, installation, and maintenance of best management practices shall constitute a complete defense to any action by the Director or to any other allegation of noncompliance with paragraph (2) of this subsection or any substantially similar terms contained in a permit for the discharge of storm water issued pursuant to subsection (f) of Code Section 12-5- 30, the "Georgia Water Quality Control Act". As used in this subsection the terms "proper design" and “properly designed” mean designed to control soil erosion and sedimentation for all rainfall events up to and including a 25-year, 24- hour rainfall event.

2.2.2. Failure to properly design, install, or maintain best management practices shall constitute a violation of any land-disturbing permit issued by Fort Stewart / Hunter Army Airfield DPW.

2.2.3. Fort Stewart / Hunter Army Airfield / DPW may require, in accordance with regulations adopted by the Board, reasonable and prudent monitoring of the turbidity level of receiving waters into which discharges from land disturbing activities occur.

2.2.4 The rules and regulations, ordinances, or resolutions adopted pursuant to this chapter for the purpose of governing land-disturbing activities shall require, as a minimum, best management practices, including sound conservation and engineering practices to prevent and minimize erosion and resultant sedimentation, which are consistent with, and no less stringent than, those practices contained in the **Manual for Erosion and Sediment Control in Georgia** published by the Georgia Soil and Water Conservation Commission as of January 1 of the year in which the land-disturbing activity was permitted, as well as the following:

2.3.1. Stripping of vegetation, re-grading and other development activities shall be conducted in a manner so as to minimize erosion.

2.3.2. Cut-fill operations must be kept to a minimum, as defined by contract.

2.3.3. Development plans must conform to topography and soil type, so as to create the lowest practical erosion potential.

2.3.4. Whenever feasible, natural vegetation shall be retained, protected and supplemented, as called by design.

2.3.5. The disturbed area and the duration of exposure to erosive elements shall be kept to a practicable minimum.

2.3.6. Disturbed soil shall be stabilized as quickly as practicable.
2.3.7. Temporary vegetation or mulching shall be employed to protect exposed critical areas during development.

2.3.8. Permanent vegetation and structural erosion control practices shall be installed as soon as practicable.

2.3.9. To the extent necessary, sediment in run-off water must be trapped by the use of debris basins, sediment basins, silt traps, or similar measures until the disturbed area is stabilized. As used in this paragraph, a disturbed area is stabilized when it is brought to a condition of continuous compliance with the requirements of O.C.G.A. 12-7-1 et. seq.

2.3.10. Adequate provisions must be provided to minimize damage from surface water to the cut face of excavations or the sloping of fills.

2.3.11. Cuts and fills may not endanger adjoining property.

2.3.12. Fills may not encroach upon natural watercourses or constructed channels in a manner so as to adversely affect other property owners.

2.3.13. Grading equipment must cross, flowing streams by means of bridges or culverts except when such methods are not feasible, provided, in any case, that such crossings are kept to a minimum;

2.3.14. Land-disturbing activity plans for erosion and sedimentation control shall include provisions for treatment or control of any source of sediments and adequate sedimentation control facilities to retain sediments on-site or preclude sedimentation of adjacent waters beyond the levels specified in Section IV B. 2. of this ordinance.

2.3.15. A 25 foot buffer along the banks of all state waters, as measured

horizontally from the point where vegetation has been wrested by normal stream flow or wave action, except where the Director determines to allow a variance that is at least as protective of natural resources and the environment, where otherwise allowed by the Director pursuant to O.C.G.A. 12-2-8, or where a drainage structure or a roadway drainage structure must be constructed, provided that adequate erosion control measures are incorporated in the project plans and specifications, and are implemented; provided, however, the buffers of at least 25 feet established pursuant to part 6 of Article 5, Chapter 5 of Title 12, the "Georgia Water Quality Control Act", shall remain in force unless a variance is granted by the Director as provided in this paragraph. The following requirements shall apply to any such buffer:
No land-disturbing activities shall be conducted within a buffer and a buffer shall remain in its natural, undisturbed state of vegetation until all land-disturbing activities on the construction site are completed. Once the final stabilization of the site is achieved, a buffer may be thinned or trimmed of vegetation as long as a protective vegetative cover remains to protect water quality and aquatic habitat and a natural canopy is left in sufficient quantity to keep shade on the stream bed; provided, however, that any person constructing a single-family residence, when such residence is constructed by or under contract with the owner for his or her own occupancy, may thin or trim vegetation in a buffer at any time as long as protective vegetative cover remains to protect water quality and aquatic habitat and a natural canopy is left in sufficient quantity to keep shade on the stream bed.

2.3.16. The fact that land-disturbing activity for which a permit has been issued results in injury to the property of another shall neither constitute proof of nor create a presumption of a violation of the standards provided for in this ordinance or the terms of the permit.

PART 3

3.1 APPLICATION/PERMIT PROCESS

Fort Stewart / Hunter Army Airfield / DPW, shall review plans and detailed plans of Fort Stewart / Hunter Army Airfield, that affect the tract to be developed and the area surrounding it.

3.2 APPLICATION REQUIREMENTS

3.2.1. No person shall conduct any land-disturbing activity within the jurisdictional boundaries of Fort Stewart / Hunter Army Airfield without first obtaining a permit from Fort Stewart / Hunter Army Airfield / DPW to perform such activity.

3.2.2 The application for a permit shall be submitted to Fort Stewart / Hunter Army Airfield / DPW and must include the applicant’s erosion and sedimentation control plan with supporting data, as necessary. Said plans shall include, as a minimum, the data specified in Section 3.3 of this ordinance. Soil erosion and sedimentation control plans shall conform to the provisions of Section 2.2 of this ordinance. Applications for a permit will not be accepted unless accompanied by (4) copies of the applicant’s soil erosion and sedimentation control plans.

3.2.3. Immediately upon receipt of an application and plan for a permit, Fort Stewart / Hunter Army Airfield / DPW shall refer the application and plan to the USDA-NRCS for its review and approval or disapproval concerning the adequacy of the erosion and sedimentation control plan. The results of the USDA-NRCS review

shall be forwarded to the Fort Stewart / Hunter Army Airfield / DPW. No permit will be issued unless the plan has been approved by the USDA-NRCS, and any variances required by Section IV C. 15. & 16.

3.2.4. If a permit applicant has had two or more violations of previous permits, this ordinance section, or the Erosion and Sedimentation Act, as amended, within three years prior to the date of filing of the application under consideration, the Fort Stewart / Hunter Army Airfield / DPW may deny the permit application.

3.3 PLAN REQUIREMENTS

3.3.1. Plans must be prepared to meet the minimum requirements as contained in Section 3.3 of this ordinance. Conformance with the minimum requirements may be attained through the use of design criteria in the current issue of the **Manual for Erosion and Sediment Control in Georgia**, published by the State Soil and Water Conservation Commission as a guide; or through the use of more stringent, alternate design criteria which conform to sound conservation and engineering practices. The **Manual for Erosion and Sediment Control in Georgia** is hereby incorporated by reference into this ordinance. The plan for the land-disturbing activity shall consider the interrelationship of the soil types, geological and hydrological characteristics, topography, watershed, vegetation, proposed permanent structures including roadways, constructed waterways, sediment control and storm water management facilities, local ordinances and State laws.

3.3.2. Data Required for Site Plan

3.3.3. Narrative or notes, and other information: Notes or narrative to be located on the site plan in general notes or in erosion and sediment control notes.

3.3.4. Description of existing land use at project site and description of proposed project.

3.3.5. Name, address, and phone number of the property owner.

3.3.6. Name and phone number of 24-hour local contact who is responsible for erosion and sedimentation controls.

3.3.7. Size of project, or phase under construction, in acres.

3.3.8. Activity schedule showing anticipated starting and completion dates for the project. Include the statement, in **bold letters**, that "**The installation of erosion and sedimentation control measures and practices shall occur prior to or concurrent with land-disturbing activities**."

3.3.9. Stormwater and sedimentation management systems-storage capacity, hydrologic study, and calculations, including off-site drainage areas.

3.3.10. Vegetative plan for all temporary and permanent vegetative measures, including species, planting dates, and seeding, fertilizer, lime, and mulching rates. The vegetative plan should show options for year-round seeding.

3.3.11. Detail drawings for all structural practices. Specifications may follow guidelines set forth in the **Manual for Erosion and Sediment Control in Georgia**.

3.3.12. Maintenance statement - "**Erosion and sedimentation control measures will be maintained at all times. Additional erosion and sedimentation control measures and practices will be installed if deemed necessary by onsite inspection**."

3.3.13. Maps, drawings, and supportive computations shall bear the signature/seal

of a registered or certified professional in engineering, architecture, landscape architecture, land surveying, or erosion and sedimentation control. The certified plans shall contain:

3.3.14. Graphic scale and north point or arrow indicating magnetic north.

3.3.15. Vicinity maps showing location of project and existing streets.

3.3.16. Boundary line survey.

3.3.17. Delineation of disturbed areas within project boundary.

3.3.18. Existing and planned contours, with an interval in accordance with the following:

Map Scale	**Ground Slope**	**Contour Interval, ft.**
1 inch = 100 ft	Flat 0-2%.	0.5 or 1
larger scale	Rolling 2-8%	1 or 2
	Steep 8% +	2, 5 or 10

3.3.19. Adjacent areas and features areas such as streams, lakes, residential areas, etc. which might be affected should be indicated on the plan.

3.3.20. Proposed structures or additions to existing structures and paved areas.

3.3.21. Delineate the 25-foot horizontal buffer adjacent to state waters and the specified width in MRPA areas.

3.3.22. Location of erosion and sedimentation control measures and practices using coding symbols from the **Manual for Erosion and Sediment Control in Georgia**, Chapter 6.

3.3.23. Maintenance of all soil erosion and sedimentation control practices, whether temporary or permanent, shall be at all times the responsibility of the property owner.

3.4 PERMITS

3.4.1. Permits shall be issued or denied as soon as practicable, but in any event not later than fifteen (15) days after receipt by Fort Stewart / Hunter Army Airfield / DPW of a completed application.

3.4.2. No permit shall be issued by Fort Stewart / Hunter Army Airfield/ DPW unless the erosion and sedimentation control plan has been approved by USDA-NRCS and Fort Stewart / Hunter Army Airfield/ DPW has affirmatively determined that the plan is in compliance with this ordinance and all ordinances and rules and regulations in effect within the jurisdictional boundaries of the Fort Stewart / Hunter Army Airfield / DPW are met. If the permit is denied, the reason for denial shall be furnished to the applicant.

3.4.3. If the tract is to be developed in phases, then a separate permit shall be required for each phase.

3.4.4. The permit may be suspended, revoked, or modified by Fort Stewart / Hunter Army Airfield/ DPW, as to all or any portion of the land affected by the plan, upon finding that the holder or his successor in the title is not in compliance with the approved erosion and sedimentation control plan or that the holder or his successor in title is in violation of this ordinance. A holder of a permit shall notify any successor in title to him as to all or any portion of the land

affected by the approved plan of the conditions contained in the permit.

3.5 INSPECTIONS AND ENFORCEMENT

3.5.1 Fort Stewart / Hunter Army Airfield / DPW or USDA-NRCS representative, will periodically inspect the sites of land-disturbing activities for which permits have been issued to determine if the activities are being conducted in accordance with the plan and if the measures required in the plan are effective in controlling erosion and sedimentation. If, through inspection, it is deemed that a person engaged in land-disturbing activities as defined herein has failed to comply with the approved plan, with permit conditions, or with the provisions of this ordinance, a written Notice to comply shall be served upon that person. The notice shall set forth the measures necessary to achieve compliance and shall state the time within which such measures must be completed (fifteen days). If the person engaged in the land-disturbing activity fails to comply within the time specified, he shall be deemed in violation of this ordinance.

3.5.2. Fort Stewart / Hunter Army Airfield/ DPW or USDA-NRCS representative shall have the power to conduct such investigations as it may reasonably deem necessary to carry out duties as prescribed in this ordinance, and for this purpose to enter at reasonable times upon any site, for the purpose of investigation and inspecting the sites of land-disturbing activities.

3.5.3. No person shall refuse entry or access to any authorized representative or agent of Fort Stewart/Hunter Army Airfield / DPW or USDA-NRCS representative, who requests entry for the purposes of inspection, and who presents appropriate credentials, nor shall any person obstruct, hamper or interfere with any such representative while in the process of carrying out their official duties.

3.6 PENALTIES AND INCENTIVES

3.6.1 FAILURE TO OBTAIN A PERMIT FOR LAND-DISTURBING ACTIVITY
If any person commences any land-disturbing activity requiring a land-disturbing permit as prescribed in this ordinance without first obtaining said permit, the person shall be subject to a stop work order within the boundaries of Fort Stewart / Hunter Army Airfield.

3.7. STOP-WORK ORDERS

3.7.1. For the first violation of the provisions of this ordinance, Fort Stewart / Hunter Army Airfield / DPW shall issue a written warning to the violator. The violator shall have a designated amount of time to correct the violation. If the violation is not corrected within allotted time, Fort Stewart / Hunter Army Airfield/ DPW shall issue a stop-work order requiring that land-disturbing activities be stopped until necessary corrective action or mitigation has occurred; provided, however, that, if the violation presents an imminent threat to public health or waters of the state or if the land-disturbing activities are conducted without obtaining the necessary permit, Fort Stewart / Hunter Army Airfield/ DPW shall issue an immediate stop-work order in lieu of a warning;

3.7.2. For a third and each subsequent violation, Fort Stewart / Hunter Army Airfield / DPW shall issue an immediate stop-work order; and;

3.7.3. All stop-work orders shall be effective immediately upon issuance and shall be in effect until the necessary corrective action or mitigation has occurred.

4.0 DEFINITIONS: The following definitions shall apply in the interpretation and enforcement of this ordinance, unless otherwise specifically stated:

Definitions

1. Best Management Practices (BMP's):
A collection of structural practices and vegetative measures which, when properly designed, installed and maintained, will provide effective erosion and sedimentation control for all rainfall events up to and including a 25-year, 24-hour rainfall event.
2. Board: The Board of Natural Resources.
3. Buffer: The area of land immediately adjacent to the banks of state waters in its natural state of vegetation, which facilitates the protection of water quality and aquatic habitat.
4. Commission: The State Soil & Water Conservation Commission.
5. Cut: A portion of land surface or area from which earth has been removed or will be removed by excavation; the depth below original ground surface to excavated surface. Also known as excavation.
6. Department: The Department of Natural Resources.
7. Director: The Director of the Environmental Protection Division of the Department of Natural Resources.
8. Division: The Environmental Protection Division of the Department of Natural Resources.
9. Drainage Structure: A device composed of a virtually non-erodible material such as concrete, steel, plastic or other such material that conveys water from one place to another by intercepting the flow and carrying it to a release point for storm-water management, drainage control, or flood control purposes.
10. Erosion: The process by which land surface is worn away by the action of wind, water, ice or gravity.
11.Erosion and Sedimentation Control Plan:
A plan for the control of soil erosion and sedimentation, resulting from a land-disturbing activity.
12. Fill: A portion of land surface to which soil or other solid material has been added; the depth above the original ground.
13. Finished Grade: The final elevation and contour of the ground after cutting or filling and conforming to the proposed design.
14. Grading: Altering the shape of ground surfaces to a predetermined condition; this includes stripping, cutting, filling, stockpiling and shaping or any combination thereof and shall include the land in its cut or filled condition.
15. Ground Elevation: The original elevation of the ground surface prior to cutting or filling.
16. Issuing Authority: DPW
17. Land-Disturbing Activity: Any activity which may result in soil erosion from water or wind and the movement of sediments into state waters or onto lands within the state, including, but not limited to, clearing, dredging, grading, excavating, transporting, and filling of land but not including agricultural practices as described in Section III, Paragraph 5.
18. Metropolitan River Protection Act (MRPA): A state law referenced as O.C.G.A. 12-5-440 et.seq., which addresses environmental and developmental matters in certain metropolitan river corridors and their drainage basins.
19. Natural Ground Surface: The ground surface in its original state before any grading, excavation or filling.
20. Nephelometric Turbidity Units (NTU): Numerical units of measure based upon photometric analytical techniques for measuring the light scattered by finely divided particles of a substance in suspension. This technique is used to estimate the extent of turbidity in water in which colloidally dispersed particles are present.
21. Permit: The authorization necessary to conduct a land-disturbing activity under the provisions of this ordinance.
22. Person: Any individual, partnership, firm, association, joint venture, public or private corporation, trust, estate, commission, board, public or private institution, utility, cooperative, state agency, municipality or other political subdivision of this State, any interstate body or any other legal entity.

23. Project: The entire proposed development project regardless of the size of the area of land to be disturbed.

24. Roadway Drainage Structure: A device such as a bridge, culvert, or ditch, composed of a virtually non-erodible material such as concrete, steel, plastic, or other such material that conveys water under a roadway by intercepting the flow on one side of a traveled way consisting of one or more defined lanes, with or without shoulder areas, and carrying water to a release point on the other side.

25. Sediment: Solid material, both organic and inorganic, that is in suspension, is being transported, or has been moved from its site of origin by air, water, ice, or gravity as a product of erosion.

26. Sedimentation: The process by which eroded material is transported and deposited by the action of water, wind, ice or gravity.

27. Stabilization: The process of establishing an enduring soil cover of vegetation by the installation of temporary or permanent structures for the purpose of reducing to a minimum the erosion process and the resultant transport of sediment by wind, water, ice or gravity.

28. State Waters: Any and all rivers, streams, creeks, branches, lakes, reservoirs, ponds, drainage systems, springs, wells, and other bodies of surface or subsurface water, natural or artificial, lying within or forming a part of the boundaries of the State which are not entirely confined and retained completely upon the property of a single individual, partnership, or corporation.

29. Structural Erosion and Sedimentation Control Practices: Practices for the stabilization of erodible or sediment-producing areas by utilizing the mechanical properties of matter for the purpose of either changing the surface of the land or storing, regulating or disposing of runoff to prevent excessive sediment loss. Examples of structural erosion and sediment control practices are riprap, sediment basins, dikes, level spreaders, waterways or outlets, diversions, grade stabilization structures, sediment traps and land grading, etc. Such practices can be found in the publication *Manual for Erosion and Sediment Control in Georgia.*

30. Vegetative Erosion and Sedimentation Control Measures: Measures for the stabilization of erodible or sediment-producing areas by covering the soil with:

A. Permanent seeding, sprigging or planting, producing long-term vegetative cover; or

B. Temporary seeding, producing short-term vegetative cover; or

C. Sodding, covering areas with a turf of perennial sod-forming grass. Such measures can be found in the publication *Manual for Erosion and Sediment Control in Georgia.*

31. Watercourse: Any natural or artificial watercourse, stream, river, creek, channel, ditch, canal, conduit, culvert, drain, waterway, gully, ravine, or wash in which water flows either continuously or intermittently and which has a definite channel, bed and banks, and including any area adjacent thereto subject to inundation by reason of overflow or floodwater.

32. Wetlands: Those areas that are inundated or saturated by surface or ground water at a frequency and duration sufficient to support, and that under normal circumstances do support a prevalence of vegetation typically adapted for life in saturated soil conditions. Wetlands generally include swamps, marshes, bogs, and similar areas.

Exhibit 1

EROSION AND SEDIMENT CONTROL PLAN REVIEW CHECKLIST
Project Name _____ Date on Plans_____
Location - Fort Stewart/Hunter Army Airfield

Site plan:
1) Show graphic scale and north arrow.
2) Provide vicinity map showing site's relation to surrounding area.
3) Provide both existing and planned contours with contour lines drawn at an interval in accordance
with the following:

Map Scale	Ground Slope	Contour Interval, ft
1 inch = 100 ft	FIat 0-2%	
0.5 or 1		
	Rolling 2-8%	1 or 2
or larger scale	Steep 8% +	
2, 5 or 10		

4) Delineate contributing drainage areas both on and off site. Include hydrology study and maps of
drainage basins for both the pre- and post-developed conditions.
5) Delineate all state waters located on or within 200 feet of the protect site.

I
6) Show location of erosion and sediment practices using uniform coding symbols from the
Manual for erosion and sediment Control in Georgia, Chapter 6, with legend.
7) Delineate 25-foot undisturbed buffers of state waters. Clearly note areas of impact.
8) Delineate all wetlands and provide regulatory documentation permitting any proposed impacts.
9) Include soil series and their delineation.
10) Describe adjacent areas — neighboring areas such as streams, lakes, residential areas, etc which
might be affected.

Narrative Notes and Other Information: (**Notes or narrative** should be located on the site plan under erosion notes or under erosion and sediment control notes).
1) Provide description of existing land use at project site and description of proposed project.
2) Name and phone number of 24-hour local contact that is responsible for erosion and
sediment controls.
3) Show signature and seal of qualified plan preparer.
4) Note total and disturbed acreage of the project or phase under construction.
5) Provide detailed construction activity schedule— show anticipated starting and completion dates for events, include vegetation and mulching timeline.
6) Clearly note the statement in bold letters, **"The escape of sediment from the site shall be prevented by the installation of erosion and sediment control measures and practices prior to, or concurrent with, land-disturbing activities."**
7) Provide 67 cubic yards per acre sediment storage. Include specific design information and calculation for all structural measures on site, such as temporary sediment basins, retrofitted detention ponds, and channels.
8) Show storm-drain pipe and weir velocities and provide appropriate outlet protection to accommodate discharges without erosion.
9) Provide vegetative plan, noting all temporary and permanent vegetative practices. Include species, planting dates and seeding, fertilizer, lime, and mulching rates. Vegetative plan shall be site specific for appropriate time of year, that seeding will take place and for the Fort Stewart/HAAF area.
10) Provide detailed drawings for all structural practices Specifications must, at a minimum, meet guidelines set forth in the Manual for Erosion and Sediment Control in Georgia.
11) Clearly note maintenance statement — "Erosion control measures will be maintained at all times. If full implementation of the approved plan does not provide for effective erosion control, additional erosion and sediment control measures shall be implemented to control or treat the sediment source."

GaSWCC (AmeMed - 2000)

Exhibit 2

For Official Use Only

NOTICE OF INTENT

State of Georgia
Environmental Protection Division
For Coverage Under General Permit GAR100000
To Discharge Storm Water Associated With Construction Activity

PRIMARY PERMITTEE

I. SITE/OWNER/OPERATOR INFORMATION

Site Project Name: _____

Site Location and Street Address: _____

City: _____ County: _____

Subdivision Name: _____

Owner's Name: _____

Address: _____ City: _____ State: _____ Zip Code: _____

Operator's Name: _____ Phone: _____

Address: _____ City: _____ State: _____ Zip Code: _____

Facility Contact: _____ Phone: _____

II. SITE ACTIVITY INFORMATION

Start Date: _____ Completion Date: _____ Estimated Disturbed Acreage: ___

Land Disturbance Activity Permit Number: _____ Date Issued: _____

Date Building Permit Issued: _____

Type Construction Activity: Commercial Industrial Municipal Linear Utility Residential/Subdivision Development

Number of Secondary Permittees: _____

III. RECEIVING WATER INFORMATION

A. Name of Initial Receiving Water(s): _____

Trout Stream Warm Water Fisheries Stream

B. Name of Municipal Storm Sewer System Owner/Operator: _____

Name of Receiving Water(s): _____

Trout Stream Warm Water Fisheries Stream

C. Sampling of Outfall(s) Sampling of Receiving Stream(s) Trout Stream

Number of Outfalls: ___ Appendix B NTU Value: _____ Surface Water Drainage Area: __

IV. ATTACHMENTS

Indicate below the items attached to this Notice of Intent:

_____ Location map showing the receiving stream(s), outfall(s) or combination thereof to be monitored.

_____ Erosion, Sedimentation and Pollution Control Plan (if project is greater than 50 acres).

_____ Comprehensive Monitoring Program (if the project is greater than 50 acres).

_____ List of known secondary permittees.

_____ Schedule for the timing of the major construction activities.

V. CERTIFICATIONS

1. I certify that the location of the receiving water(s) or outfall(s) or a combination of receiving water(s) and outfall(s) to be monitored is shown on a map or drawing of appropriate scale and a copy of this map or drawing are attached to this Notice.

2. I certify that the Erosion, Sedimentation, and Pollution Control Plan (Plan) has been prepared in accordance with Part IV of the General NPDES Permit GAR100000, the Plan will be implemented, and that such Plan will provide for compliance with this permit. If the site is greater than 50 acres of disturbed area, I certify that a copy of the Erosion, Sedimentation, and Pollution Plan is attached to the notice.

3. I certify that a copy of the Erosion, Sedimentation and Pollution Control Plan or the applicable portions of the Plan will be provided to each and every secondary permittee. A list of the secondary permittees known at the time of making this Notice is attached.

4. I certify that a schedule for the timing of the various major construction activities, if applicable, is attached to this Notice.

5. I certify that the receiving water(s) or the outfall(s) or a combination of receiving water(s) and outfall(s) will be monitored in accordance with the Comprehensive Monitoring Program.

6. I certify under penalty of law that this document and all attachments were prepared under my direction or supervision in accordance with a system designed to assure that qualified personnel properly gather and evaluate the information submitted. Based upon my inquiry of the person or persons who manage the system, or those persons directly responsible for gathering the information, the information submitted is, to the best of my knowledge and belief, true, accurate, and complete. I am aware that there are significant penalties for submitting false information, including the possibility of fine and imprisonment for knowing violations.

Owner's Printed Name: _____ Title: _____

Signature: _____ Date: _____

Operator's Printed Name: _____ Title: _____

Signature: _____ Date: _____

Instructions
Notice of Intent - *Primary Permittee*
For Storm Water Discharges

Associated With Construction Activity
To Be Covered Under The NPDES General Permit No. GAR100000
Who must file a Notice of Intent (NOI) Form

This Notice of Intent must be typed. Any NOI that contains illegible information will not be accepted, will be returned, and the site will not be granted Permit coverage. All information on this NOI must be submitted to be a valid Notice. Any information requested on the NOI that is not applicable to the owner and operator or to the site must be marked "N/A".

The Owner and Operator of an activity that has a discharge of storm water from a site where construction activities occur must apply for a National Pollutant Discharge Elimination System (NPDES) Permit. The Georgia Environmental Protection Division has issued this General NPDES Permit for storm water discharges from construction activities on June 12, 2000, with an effective date of August 1, 2000. The Permit is available is available for review at EPD's offices and on EPD's web page at www.dnr.state.ga.us/epd. It is highly recommended that the permittee read and understand the terms and conditions of the Permit. New non-linear projects 250 acres or greater in size are not eligible for coverage under this Permit. Such projects should contact EPD at 404/675-6240 for application guidance. Contact EPD at the Regional Office or District Office shown on the next page for assistance in completing this NOI.

Where to file NOI Forms -- The NOI and attachments must be sent to the Regional Office or District Office shown on the next page.

Section I. Site / Primary Permittee Information
Enter the information required. The site/project name is the physical location of the construction activity. Should the site lack a street address, describe where the facility sufficient so one can locate the site. Should additional space is needed, attach the description to the notice.

The facility contact is the person who the primary permittee has assigned the responsibility for the daily on-site operational control. Please do not leave any blanks in this section.

Section II. Site Activity Information
The start date and completion date are expected for the construction activity for which this NOI is applicable.

Estimated disturbed acreage is the total number of disturbed acres the primary permittee will disturb.

Section III. Receiving Water Information
If the facility discharges storm water directly or indirectly (but not through a MS4) to the receiving water(s), enter the name(s) of the receiving water(s) and indicate whether the water(s) is a trout stream or a warm water fisheries stream. Attach to this notice a written description and a map of the location of the receiving water(s).

If the storm water discharges to a municipal separate storm sewer system (MS4), enter the name of the operator of the MS4 (e.g., city name or county name) and the name of the receiving water at the point of discharge from the MS4. A MS4 is defined as a conveyance or system of conveyances (including: roads with drainage systems, municipal streets, catch basins, curbs, gutters, ditches, man-made channels, or storm drains) that is owned or operated by a city or county which is designed or used for collecting or conveying storm water. It may be necessary to

contact the city or county that operates the MS4 to determine the name of the receiving waters. Indicate whether the receiving water(s) is a trout stream or a warm water fisheries stream.

Section IV. Certifications

All applicants must sign this certification. Federal and State statutes provide specific requirements as to whom is authorized to sign Notice of Intents. Signing of a Notice of Intent by others is not a valid submittal. Please be aware Federal and State statues provide severe penalties for submitting false information on this application form. Federal and State regulations require this application to be signed as follows:

- For a corporation: by a responsible corporate officer;
  - For a partnership or sole proprietorship: by a general partner or the proprietor; or
  - - For a municipality, state, Federal or other public facility: by either a principal executive officer or ranking elected official.

Exhibit 3

For Official Use only

NOTICE OF TERMINATION

State of Georgia
Environmental Protection Division
To Cease Coverage Under General Permit GAR100000
To Discharge Storm Water Associated With Construction Activity

I. SITE / PERMITTEE INFORMATION

Site/Project Name: _____

Site Location and Street Address: _____

City: _____ County: _____

Subdivision Name: _____ Lot Number: _____

Permittee Name: _____ Phone: _____

Address: _____ City: _____ State: _____ Zip Code: _____

Type of Permittee: Primary Secondary Tertiary

Facility Contact: _____ Phone: _____

If Applicable:

Primary Permittee's Name: _____ Phone: _____

Address: _____ City: _____ State: _____ Zip Code: _____

II. SITE ACTIVITY INFORMATION

Construction Activity Completed No Longer Owner / Operator of Construction Activity

Construction Activity: Commercial Industrial Municipal DOT Utility

Residential Primary Permittee of a Subdivision Development, or

Individual Lot, or

Individual Lot within a Surface Water Drainage Area

where the Primary Permittee has ceased Permit Coverage

Land Disturbance Activity Permit Number: _____ Date Issued: _____

Name of Initial Receiving Water(s): _____

Name of Municipal Storm Sewer System Owner/Operator: _____

Name of Receiving Waters: _____

III. ATTACHMENT

Indicate below if this item is attached to this Notice of Termination:

_____ Final monitoring report for receiving water(s) and/or stormwater outfalls.

IV. CERTIFICATIONS

1. I certify that a copy of the final monitoring report, if applicable, is attached to this Notice. This monitoring report shows the monitoring data for a receiving water(s) and/or storm water outfall(s) collected between the period of final stabilization and the filing of this Notice.

2. I certify under penalty of law that either: (a) all storm water discharges associated with construction activity from the portion of the construction activity where I was an Owner or Operator have ceased or have been eliminated; (b) all storm water discharges associated with construction

activity from the identified site that are authorized by General NPDES Permit No. GAR 100000 have ceased; (c) I am no longer an Owner or Operator at the construction site and a new Owner or Operator has assumed operational control for those portions of the construction site where I previously had ownership or operational control; and/or if I am a primary permittee filing this Notice of Termination under Part VII.A.4. of this permit, I will notify by written correspondence to the subsequent legal title holder of any remaining lots that these lot Owners and /or Operators will become tertiary permittees for purposes of this permit and I will provide these tertiary permittees with the primary permittee's Erosion, Sedimentation and Pollution Control Plan. I understand that by submitting this Notice of Termination, that I am no longer authorized to discharge storm water associated with construction activity by the general permit, and that discharging pollutants in storm water associated with construction activity to waters of Georgia is unlawful under the Georgia Water Quality Control Act and the Clean Water Act where the discharge is not authorized by a NPDES permit.

3. I certify under penalty of law that this document and all attachments were prepared under my direction or supervision in accordance with a system designed to assure that qualified personnel properly gather and evaluate the information submitted. Based upon my inquiry of the person or persons who manage the system, or those persons directly responsible for gathering the information, the information submitted is, to the best of my knowledge and belief, true, accurate, and complete. I am aware that there are significant penalties for submitting false information, including the possibility of fine and imprisonment for knowing violations.

Printed Name:_____ Title:_____

Signature:_____ Date:_____

Instructions
Notice of Termination (NOT) For Storm Water Discharges
Associated With Construction Activity
NPDES General Permit No. GAR100000

Who must file a Notice of Termination (NOT) Form

This Notice of Termination must be typed. Any NOT that contains illegible information will not be accepted. All information on this NOT must be submitted to be a valid Notice. Any information requested on the NOT that is not applicable to the owner and operator or the site must be marked "N/A".

When the facility/site has been finally stabilized and all storm water discharges from construction activities authorized by the NPDES General Permit No. GAR100000 have ceased or when the Owner/Operator of the site changes, the Owner/Operator of the facility/site must submit a Notice of Termination (NOT). Final stabilization means that all soil disturbing activities at the site have been completed, and that for unpaved areas and areas not covered by permanent structures, at least 70% of the soil surface is uniformly covered in permanent vegetation or equivalent permanent stabilization measures (such as the use of rip rap, gabions, permanent mulches or geotextiles) have been employed. Permanent vegetation shall consist of: planted trees, shrubs, perennial vines; a crop of perennial vegetation appropriate for the time of year and region; or a crop of annual vegetation and a seeding of target crop perennials appropriate for the region, such that within the growing season a 70% coverage by perennial vegetation shall be achieved. Final stabilization applies to each phase of construction. For linear construction projects on land used for agricultural or silvicultural purposes, final stabilization may be accomplished by stabilizing the disturbed land for its agricultural or silvicultural use. (General NPDES Permit Part VII.A and Part I.A.11)

Where to file NOT Forms - The NOT and attachments must be sent to the Regional Office or District Office shown on the next page.

Section I. Site / Permittee Information

Enter the information required. The site/project name is the physical location of the construction activity. Should the site lack a street address, describe where the facility sufficient so one can locate the site. Should additional space be needed, attach the description to the notice.

The facility contact is the person who the Owner and Operator has assigned the responsibility for the daily on-site operational control. Please do not leave any blanks in this section.

Section II. Site Activity Information

Indicate by marking the appropriate block whether this NOT is submitted due to completion of the construction activity or a change in the Owner and Operator of the construction activity.

Mark the appropriate box to indicate the class of construction activity that was conducted at the site. For residential sites, also mark the block as either a subdivision development or an individual lot.

Enter the Land Disturbance Activity (LDA) Permit Number assigned by the city government, county government, or EPD for the facility/site for which this NOT is being submitted. Enter N/A if a LDA Permit Number was not required for this facility/site.

Section III. Attachment

Indicate by marking with an "X" if this item is attached to this Notice.

Section IV. Certifications

All applicants must sign this Notice. Federal and State statutes provide specific requirements as to whom is authorized to sign Notice of Terminations. Signing of a Notice of Termination by others is not a valid submittal. Please be aware Federal and State statues provide severe penalties for submitting false information on this application form. Federal and State regulations require this application to be signed as follows:

- For a corporation: by a responsible corporate officer;
- For a partnership or sole proprietorship: by a general partner or the proprietor; or
- For a municipality, state, Federal or other public facility: by either a principal executive officer or ranking elected official.

SECTION TABLE OF CONTENTS

DIVISION 01 - GENERAL REQUIREMENTS

SECTION 01420

SOURCES FOR REFERENCE PUBLICATIONS

06/04

1.1 REFERENCES
1.2 ORDERING INFORMATION

-- End of Section Table of Contents --

SECTION 01420

SOURCES FOR REFERENCE PUBLICATIONS
06/04

****
NOTE: This guide specification provides a listing of organizations whose publications are referenced in other sections of the specifications.

Comments and suggestions on this guide specification are welcome and should be directed to the technical proponent of the specification. A listing of technical proponents, including their organization designation and telephone number, is on the Internet.

Recommended changes to a UFGS should be submitted as a Criteria Change Request (CCR).

Use of electronic feedback is encouraged.
****

****
NOTE: In accordance with FAR 11.201, identification of sources for obtaining documents referenced in the specificatioins must be provided.
****

1.1 REFERENCES

Various publications are referenced in other sections of the specifications to establish requirements for the work. These references are identified in each section by document number, date and title. The document number used in the citation is the number assigned by the standards producing organization, (e.g. ASTM B 564 Nickel Alloy Forgings). However, when the standards producing organization has not assigned a number to a document, an identifying number has been assigned for reference purposes.

1.2 ORDERING INFORMATION

****
NOTE: Information regarding standards producing organizations was in agreement with information contained in the Unified Master Reference List (UMRL) as of date of this guide specification.

This paragraph is automatically edited by removal of those organizations not included in other sections of the project specifications when SpecsIntact (Reconcile Addresses item from the Print menu) is use for job processing. However, if publications of organizations in addition to those listed below are used in the project, such additional organizations must be added to this paragraph.
****

The addresses of the standards publishing organizations whose documents are referenced in other sections of these specifications are listed below, and if the source of the publications is different from the address of the sponsoring organization, that information is also provided. Documents listed in the specifications with numbers which were not assigned by the standards producing organization should be ordered from the source by title

rather than by number.

ACI INTERNATIONAL (ACI)
P.O. Box 9094
Farmington Hills, MI 48333-9094
Ph: 248-848-3700
Fax: 248-848-3701
E-mail: bkstore@concrete.org
Internet: http://www.aci-int.org

AIR-CONDITIONING AND REFRIGERATION INSTITUTE (ARI)
4100 North Fairfax Drive, Suite 200
Arlington, VA 22203
Ph: 703-524-8800
Fax: 703-528-3816
E-mail: ari@ari.org
Internet: http://www.ari.org

AIR CONDITIONING CONTRACTORS OF AMERICA (ACCA)
2800 Shirlington Road, Suite 300
Arlington, VA 22206
Ph: 703-575-4477
Fax: 703-575-4449
E-mail: info@acca.org
Internet: http://www.acca.org

AIR DIFFUSION COUNCIL (ADC)
1000 East Woodfield Road, Suite 102
Shaumburg, IL 60173-5921
Ph: 847-706-6750
Fax: 847-706-6751
E-mail: info@flexibleduct.org
Internet: http://www.flexibleduct.org

AIR MOVEMENT AND CONTROL ASSOCIATION INTERNATIONAL(AMCA)
30 West University Drive
Arlington Heights, IL 60004-1893
Ph: 847-394-0150
Fax: 847-253-0088
E-mail: amca@amca.org
Internet: http://www.amca.org

ALLIANCE FOR TELECOMMUNICATIONS INDUSTRY SOLUTIONS (ATIS)
1200 G Street, NW, Suite 500
Washington, D.C. 20005
Ph: 202-628-6380
Fax: 202-393-5453
Internet: http://www.atis.org

ALUMINUM ASSOCIATION (AA)
900 19th Street N.W., Suite 300
Washington, DC 20006
Ph: 202-862-5100
Fax: 202-862-5164
Internet: http://www.aluminum.org

AMERICAN ARCHITECTURAL MANUFACTURERS ASSOCIATION (AAMA)
1827 Walden Office Square
Suite 550

Schaumburg, IL 60173-4268
Ph: 847-303-5664
Fax: 847-303-5774
E-mail: webmaster@aamanet.org
Internet: http://www.aamanet.org

AMERICAN ASSOCIATION OF STATE HIGHWAY AND TRANSPORTATION OFFICIALS (AASHTO)
444 North Capital Street, NW, Suite 249
Washington, DC 20001
Ph: 202-624-5800
Fax: 202-624-5806
E-Mail: info@aashto.org
Internet: http://www.aashto.org

AMERICAN ASSOCIATION OF TEXTILE CHEMISTS AND COLORISTS (AATCC)
P.O. Box 12215
Research Triangle Park, NC 27709-2215
Ph: 919-549-8141
Fax: 919-549-8933
E-mail: quantem@aatcc.org
Internet: http://www.aatcc.org

AMERICAN BEARING MANUFACTURERS ASSOCIATION (ABMA)
2025 M Street, NW, Suite 800
Washington, DC 20036
Ph: 202-367-1155
Fax: 202-367-2155
E-mail: info.abma@smithbucklin.com
Internet: http://www.abma-dc.org

AMERICAN BOILER MANUFACTURERS ASSOCIATION (ABMA)
4001 North 9th Street, Suite 226
Arlington, VA 22203-1900
Ph: 703-522-7350
Fax: 703-522-2665
Internet: http://www.abma.com

AMERICAN CONCRETE PIPE ASSOCIATION (ACPA)
222 West Las Colinas Boulevard, Suite 641
Irving, TX 75039-5423
Ph: 972-506-7216
Fax: 972-506-7682
E-mail: info@concrete-pipe.org
Internet: http://www.concrete-pipe.org

AMERICAN CONFERENCE OF GOVERNMENTAL INDUSTRIAL HYGIENISTS (ACGIH)
1330 Kemper Meadow Drive
Cincinnati, OH 45240
Ph: 513-742-2020
Fax: 513-742-3355
E-mail: mail@acgih.org
Internet: http://www.acgih.org

AMERICAN FOREST & PAPER ASSOCIATION (AF&PA)
American Wood Council
ATTN: Publications Department
1111 Nineteenth Street NW, Suite 800
Washington, DC 20036

Ph: 800-890-7732 or 202-463-2766
Fax: 202-463-2791
Internet: http://www.awc.org/

AMERICAN GAS ASSOCIATION (AGA)
400 North Capitol Street N.W.
Washington, D.C. 20001
Ph: 202-824-7000
Fax: 202-824-7115
E-mail: webmaster@aga.org
Internet: http://www.aga.org

AMERICAN GAS ASSOCIATION LABORATORIES (AGAL)
400 North Capitol Street N.W.
Washington, D.C. 20001
Ph: 202-824-7000
Fax: 202-824-7115
Internet: http://www.aga.org

AMERICAN GEAR MANUFACTURERS ASSOCIATION (AGMA)
500 Montgomery Street, Suite 300
Alexandria, VA 22314-1560
Ph: 703-684-0211
Fax: 703-684-0242
E-mail: webmaster@agma.org
Internet: http://www.agma.org

AMERICAN HARDBOARD ASSOCIATION (AHA)
c/o Composite Panel Association
18922 Premiere Court
Gaithersburg, MD 20879-1574
Ph: 301-670-0604
Fax: 301-840-1252
Internet: http://www.pbmdf.org

AMERICAN INSTITUTE OF STEEL CONSTRUCTION (AISC)
One East Wacker Drive, Suite 3100
Chicago, IL 60601-2001
Ph: 312-670-2400
Fax: 312-670-5403
Publications: 800-644-2400
E-mail: pubs@aisc.org
Internet: http://www.aisc.org

AMERICAN INSTITUTE OF TIMBER CONSTRUCTION (AITC)
7012 South Revere Parkway, Suite 140
Englewood, CO 80112
Ph: 303-792-9559
Fax: 303-792-0669
E-mail: info@aitc-glulam.org
Internet: http://www.aitc-glulam.org

AMERICAN IRON AND STEEL INSTITUTE (AISI)
1140 Connecticut Avenue, NW, Suite 705
Washington, DC 20036
Ph: 202-452-7100
Fax: 202-463-6573
Internet: http://www.steel.org

AMERICAN NATIONAL STANDARDS INSTITUTE (ANSI)
1819 L Street, NW, 6th Floor
Washington, DC 20036
Ph: 202-293-8020
Fax: 202-293-9287
E-mail: info@ansi.org
Internet: http://www.ansi.org/

Note --- ANSI documents beginning with the letter "S" can be ordered from:

Acoustical Society of America (ASA)
2 Huntington Quadrangle, Suite 1NO1
Melville, NY 11747-4502
Ph: 516-576-2360
Fax: 516-576-2377
E-mail: asa@aip.org
Internet: http://asa.aip.org

AMERICAN NURSERY AND LANDSCAPE ASSOCIATION (ANLA)
1000 Vermont Avenue, NW, Suite 300
Washington, DC 20005-4914
Ph: 202-789-2900
Fax: 202-789-1893
Internet: http://www.anla.org

AMERICAN PETROLEUM INSTITUTE (API)
1220 L Street, NW
Washington, DC 20005-4070
Ph: 202-682-8000
Fax: 202-682-8223
Internet: http://www.api.org

AMERICAN PUBLIC HEALTH ASSOCIATION (APHA)
800 I Street, NW
Washington, DC 20001
Ph: 202-777-2742
Fax: 202-777-2534
E-mail: comments@apha.org
Internet: http://www.apha.org

AMERICAN RAILWAY ENGINEERING AND MAINTENANCE-OF-WAY ASSOCIATION (AREMA)
8201 Corporate Drive, Suite 1125
Landover, MD 20785-2230
Ph: 301-459-3200
Fax: 301-459-8077
Internet: http://www.arema.org

AMERICAN SOCIETY FOR NONDESTRUCTIVE TESTING (ASNT)
1711 Arlingate Lane
P.O. Box 28518
Columbus, OH 43228-0518
Ph: 800-222-2768; 614-274-6003
Fax: 614-274-6899
E-mail: webmaster@asnt.org
Internet: http://www.asnt.org

AMERICAN SOCIETY FOR QUALITY (ASQ)
600 North Plankinton Avenue
Milwaukee, WI 53203
Ph: 800-248-1946; 414-272-8575
Fax: 414-272-1734
E-mail: cs@asq.org
Internet: http://www.asq.org

AMERICAN SOCIETY OF CIVIL ENGINEERS (ASCE)
1801 Alexander Bell Drive
Reston, VA 20191-4400
Ph: 703-295-6300 - 800-548-2723
Fax: 703-295-6222
E-mail: marketing@asce.org
Internet: http://www.asce.org

AMERICAN SOCIETY OF HEATING, REFRIGERATING AND AIR-CONDITIONING ENGINEERS (ASHRAE)
1791 Tullie Circle, NE
Atlanta, GA 30329
Ph: 800-527-4723 or 404-636-8400
Fax: 404-321-5478
E-mail: ashrae@ashrae.org
Internet: http://www.ashrae.org

AMERICAN SOCIETY OF SANITARY ENGINEERING (ASSE)
901 Canterbury, Suite A
Westlake, OH 44145
Ph: 440-835-3040
Fax: 440-835-3488
E-mail: info@asse-plumbing.org
Internet: http://www.asse-plumbing.org

AMERICAN WATER WORKS ASSOCIATION(AWWA)
6666 West Quincy Avenue
Denver, CO 80235
Ph: 303-794-7711
Fax: 303-347-0804
Internet: http://www.awwa.org

AMERICAN WELDING SOCIETY (AWS)
550 N.W. LeJeune Road
Miami, FL 33126
Ph: 800-443-9353 - 305-443-9353
Fax: 305-443-7559
E-mail: info@aws.org
Internet: http://www.aws.org

AMERICAN WOOD-PRESERVERS' ASSOCIATION (AWPA)
P.O. Box 388
Selma, AL 36702-0388
Ph: 334-874-9800
Fax: 334-874-9008
E-mail: email@awpa.com
Internet: http://www.awpa.com

APA - THE ENGINEERED WOOD ASSOCIATION (APA)
7011 South 19th
Tacoma, WA 98466

Ph: 253-565-6600
Fax: 253-565-7265
E-mail: help@apawood.org
Internet: http://www.apawood.org

ARCHITECTURAL WOODWORK INSTITUTE (AWI)
1952 Isaac Newton Square West
Reston, VA 20190
Ph: 703-733-0600
Fax: 703-733-0584
Internet: http://www.awinet.org

ASBESTOS CEMENT PRODUCT PRODUCERS ASSOCIATION (ACPPA)
PMB114-1745 Jefferson Davis Highway
Arlington, VA 22202
Ph: 514-861-1153
Fax: 514-861-1152
Internet: www.asbestos-institute.ca

ASM INTERNATIONAL (ASM)
9639 Kinsman Road
Materials Park, OH 44073-0002
Ph: 440-338-5151
Fax: 440-338-4634
E-mail: cust-srv@asminternational.org
Internet: http://www.asm-international.org

ASME INTERNATIONAL (ASME)
Three Park Avenue
New York, NY 10016-5990
Ph: 212-591-7722
Fax: 212-591-7674
E-mail: infocentral@asme.org
Internet: http://www.asme.org

ASPHALT INSTITUTE (AI)
Research Park Drive
P.O. Box 14052
Lexington, KY 40512-4052
Ph: 859-288-4960
Fax: 859-288-4999
E-mail: webmaster@asphaltinstitute.org
Internet: http://www.asphaltinstitute.org

ASSOCIATED AIR BALANCE COUNCIL (AABC)
1518 K Street, NW
Washington, DC 20005
Ph: 202-737-0202
Fax: 202-638-4833
E-mail: aabchq@aol.com
Internet: http://www.aabchq.com

ASSOCIATION FOR THE ADVANCEMENT OF MEDICAL INSTRUMENTATION (AAMI)
1110 North Glebe Road, Suite 220
Arlington, VA 22201-4795
Ph: 800-332-2264 or 703-525-4890
Fax: 703-276-0793
E-mail: customerservice@aami.org
Internet: http://www.aami.org

ASSOCIATION FOR IRON AND STEEL TECHNOLOGY (AIST)
(FORMERLY: IRON & STEEL SOCIETY (ISS))
186 Thorn Hill Road
Warrendale, PA 15086-7528
Ph: 724-776-6040
Fax: 724-776-1880
E-Mail: info@aistech.org
Internet: http://www.aistech.org

ASSOCIATION OF EDISON ILLUMINATING COMPANIES (AEIC)
600 North 18th Street
P.O. Box 2641
Birmingham, AL 35291
Ph: 205-257-2530
Fax: 205-257-2540
Internet: http://www.aeic.org

ASSOCIATION OF HOME APPLIANCE MANUFACTURERS (AHAM)
1111 19th Street NW, Suite 402
Washington, DC 20036
Ph: 202-872-5955
Fax: 202-872-9354
E-mail: aham@aham.org
Internet: http://www.aham.org

ASSOCIATION OF THE WALL AND CEILING INDUSTRIES - INTERNATIONAL (AWCI)

803 West Broad Street, Suite 600
Falls Church, VA 22046
Ph: 703-534-8300
Fax: 703-534-8307
E-mail: info@awci.org
Internet: http://www.awci.org

ASTM INTERNATIONAL (ASTM)
100 Barr Harbor Drive, P.O. Box C700
West Conshohocken, PA 19428-2959
Ph: 610-832-9500
Fax: 610-832-9555
E-mail: service@astm.org
Internet: http://www.astm.org

BIFMA INTERNATIONAL (BIFMA)
2680 Horizon Drive SE, Suite A-1
Grand Rapids, MI 49546-7500
Ph: 616-285-3963
Fax: 616-285-3765
E-mail: email@bifma.org
Internet: http://www.bifma.org

BIOCYCLE, JOURNAL OF COMPOSTING AND RECYCLING (BIOCYCLE)
The JG Press Inc.
419 State Avenue
Emmaus, PA 18049
Ph: 610-967-4135
E-mail: biocycle@jgpress.com
Internet: http://www.biocycle.net

BRICK INDUSTRY ASSOCIATION (BIA)
11490 Commerce Park Drive
Reston, VA 22091-1525
Ph: 703-620-0010
Fax: 703-620-3928
E-mail: brickinfo@bia.org
Internet: http://www.bia.org

BRITISH STANDARDS INSTITUTE (BSI)
389 Chiswick High Road
London W4 4AL
United Kingdom
Ph: +44 (0)20 8996 9000
Fax: +44 (0)20 8996 7001
E-mail: cservices@bsi-global.com
Internet: http://www.bsi-global.com

BUILDERS HARDWARE MANUFACTURERS ASSOCIATION (BHMA)
355 Lexington Avenue
17th Floor
New York, NY 10017
Ph: 212-297-2122
Fax: 212-370-9047
E-mail: assocmgmt@aol.com
Internet: http://www.buildershardware.com

CANADIAN STANDARDS ASSOCIATION(CSA)
8501 East Pleasant Valley Road
Cleveland, OH 44131
Ph: 216-524-4990
Fax: 216-642-3463
Internet: http://www.csa-international.org

CARPET AND RUG INSTITUTE (CRI)
P.O. Box 2048
Dalton, GA 30722-2048
Ph: 800-882-8846 or 706-278-3176
Fax: 706-278-8835
Internet: http://www.carpet-rug.com

CAST IRON SOIL PIPE INSTITUTE (CISPI)
5959 Shallowford Road, Suite 419
Chattanooga, TN 37421
Ph: 423-892-0137
Fax: 423-892-0817
Internet: http://www.cispi.org

CEILINGS & INTERIOR SYSTEMS CONSTRUCTION ASSOCIATION (CISCA)
1500 Lincoln Highway, Suite 202
St. Charles, IL 60174
Ph: 630-584-1919
Fax: 630-584-2003
E-mail: info@cisca.org
Internet: http://www.cisca.org

CENTERS FOR DISEASE CONTROL AND PREVENTION (CDC)
1600 Clifton Road
Atlanta, GA 30333

Ph: 404-639-3311
Internet: http://www.cdc.gov

CHEMICAL FABRICS & FILM ASSOCIATION (CFFA)
1300 Sumner Avenue
Cleveland OH 44115-2851
Ph: 216-241-7333
Fax: 216-241-0105
E-mail: cffa@chemicalfabricsandfilm.com
Internet: http://www.chemicalfabricsandfilm.com/

CHLORINE INSTITUTE (CI)
1300 Wilson Boulevard
Rosslyn, VA 22209
Ph: 703-741-5760
Fax: 703-741-6068
Internet: http://www.cl2.com

COMPRESSED AIR AND GAS INSTITUTE (CAGI)
1300 Sumner Avenue
Cleveland OH 44115-2851
Ph: 216-241-7333
Fax: 216-241-0105
E-mail: cagi@cagi.org
Internet: http://www.cagi.org/

COMPRESSED GAS ASSOCIATION (CGA)
4221 Walney Road, 5th Floor
Chantilly, VA 20151-2923
Ph: 703-788-2700
Fax: 703-961-1831
E-mail: cga@cganet.com
Internet: http://www.cganet.com

CONCRETE REINFORCING STEEL INSTITUTE (CRSI)
933 North Plum Grove Road
Schaumburg, IL 60173-4758
Ph: 847-517-1200
Fax: 847-517-1206
Internet: http://www.crsi.org/

CONCRETE SAWING AND DRILLING ASSOCIATION (CSDA)
Address not known

CONSUMER PRODUCT SAFETY COMMISSION (CPSC)
4330 East-West Highway
Bethesda, MD 20814-4408
Ph: 301-504-6816
Fax: 301-504-0124 and 301-504-0025
E-mail: info@cpsc.gov
Internet: http://www.cpsc.gov

CONVEYOR EQUIPMENT MANUFACTURERS ASSOCIATION (CEMA)
6724 Lone Oak Boulevard
Naples, FL 34109
Ph: 239-514-3441
Fax: 239-514-3470
E-mail: cema@cemanet.org
Internet: http://www.cemanet.org

COOLING TECHNOLOGY INSTITUTE (CTI)
2611 FM 1960 West
Suite H-200
Houston, TX 77068-3730
Ph: 281-583-4087
Fax: 281-537-1721
Internet: http://www.cti.org

COPPER DEVELOPMENT ASSOCIATION (CDA)
260 Madison Avenue
New York, NY 10016
Ph: 212-251-7200
Fax: 212-251-7234
E-mail: questions@cda.copper.org
Internet: http://www.copper.org

CRANE MANUFACTURERS ASSOCIATION OF AMERICA (CMAA)
8720 Red Oak Boulevard, Suite 201
Charlotte, NC 28217
Ph: 704-676-1190 or 800-722-6832
Fax: 704-676-1199
Internet: http://www.mhia.org/psc/psc_products_cranes.cfm

DISTRICT OF COLUMBIA MUNICIPAL REGULATIONS (DCMR)
441 4th Street NW, Suite 520S
Washington DC 20001
Ph: 202-727-5090
Fax: 202-727-6042
Internet: http://os.dc.gov/info/odai/odai.shtm

DOOR AND ACCESS SYSTEM MANUFACTURERS ASSOCIATION (DASMA)
1300 Sumner Avenue
Cleveland, OH 44115-2851
Ph: 216-241-7333
Fax: 216-241-0105
E-mail: dasma@dasma.com
Internet: http://www.dasma.com

DUCTILE IRON PIPE RESEARCH ASSOCIATION (DIPRA)
245 Riverchase Parkway East, Suite O
Birmingham, AL 35244
Ph: 205-402-8700
Fax: 205-402-8730
E-mail: info@dipra.org
Internet: http://www.dipra.org

EIFS INDUSTRY MEMBERS ASSOCIATION (EIMA)
3000 Corporate Center Drive, Suite 270
Morrow, GA 30260
Ph: 800-294-3462
Fax: 770-968-5818
Internet: http://www.eima.com

ELECTRICAL GENERATING SYSTEMS ASSOCIATION (EGSA)
1650 South Dixie Highway, Suite 500
Boca Raton, FL 33432-7462
Ph: 561-750-5575
Fax: 561-395-8557

E-mail: e-mail@egsa.org
Internet: http://www.egsa.org

ELECTRONIC INDUSTRIES ALLIANCE (EIA)
2500 Wilson Boulevard
Arlington, VA 22201-3834
Ph: 703-907-7500
Fax: 703-907-7501
Internet: http://www.eia.org

ENERGY RESEARCH AND DEVELOPMENT ADMINISTRATION (ERDA)
Organization abolished by Dept of Energy Act
(91 Stat 577)4 Aug 1977
Successor Organization is Department of Energy
Forrestal 4B-172
Washington, DC
Ph: 202-586-4716
Fax: 202-586-1972
E-mail: dmteam@hq.doe.gov
Internet: http://www.directives.doe.gov/

ENGINE MANUFACTURERS ASSOCIATION (EMA)

Two North LaSalle Street, Suite 2200
Chicago, IL 60602
Ph: 312-827-8700
Fax: 312-827-8737
E-mail: ema@enginemanufacturers.org
Internet: http://www.enginemanufacturers.org/

ETL TESTING LABORATORIES (ETL)
Intertek Testing Services, ETL SEMKO
70 Codman Hill Road
Boxborough, MA 01719
Ph: 978-263-2662
Fax: 978-263-7086
E-mail: info@etlsemko.com
Internet: http://www.etlsemko.com

EXPANSION JOINT MANUFACTURERS ASSOCIATION (EJMA)
25 North Broadway
Tarrytown, NY 10591
Ph: 914-332-0040
Fax: 914-332-1541
E-mail: ejma@ejma.org
Internet: http://www.ejma.org

FM GLOBAL (FM)
1301 Atwood Avenue
P.O. Box 7500
Johnston, RI 02919
Ph: 401-275-3000
Fax: 401-275-3029
E-mail: information@fmglobal.com
Internet: http://www.fmglobal.com

FLUID SEALING ASSOCIATION (FSA)
994 Old Eagle School Road, #1019
Wayne, PA 19087

Ph: 610-971-4850
Fax: 610-9971-4859
E-mail: info@fluidsealing.com
Internet: http://www.fluidsealing.com

FORESTRY SUPPLIERS INC. (FSUP)
205 West Rankin Street
P.O. Box 8397
Jackson, MS 39284-8397
Ph: 601-354-3565
Fax: 601-292-0165
E-mail: cs@forestry-suppliers.com
Internet: http://www.forestry-suppliers.com

FOUNDATION FOR CROSS-CONNECTION CONTROL AND HYDRAULIC RESEARCH (FCCCHR)
University of South California
Kaprielian Hall 200
Los Angeles, CA 90089-2531
Ph: 213-740-2032
Fax: 213-740-8399
E-mail: fccchr@usc.edu
Internet: http://www.usc.edu/dept/fccchr

U. S. GREEN BUILDING COUNCIL
1015 18th Street, NW, Suite 805
Washington, D.C. 20036
Ph: 202-828-7422
Fax: 202-828-5110
Internet: http://www.usgbc.org
AOK: 2/04
LOK: 2/04

GEOLOGICAL SOCIETY OF AMERICA (GSA)
P.O. Box 9140
Boulder, CO 80301-9140
Ph: 303-447-2020
Fax: 303-357-1070
E-mail: gsaservice@geosociety.org
Internet: http://www.geosociety.org

GEOSYNTHETIC INSTITUTE (GSI)
475 Kedron Avenue
Folsom, PA 19033
Ph: 610-522-8440
Fax: 610-522-8441
Internet: http://www.geosynthetic-institute.org

GLASS ASSOCIATION OF NORTH AMERICA (GANA)
2945 SW Wanamaker Drive, Suite A
Topeka, KS 66614
Ph: 785-271-0208
Fax: 785-271-0166
E-mail: gana@glasswebsite.com
Internet: http://www.glasswebsite.com

GYPSUM ASSOCIATION (GA)
810 First Street, NE, Suite 510
Washington, DC 20002

Ph: 202-289-5440
Fax: 202-289-3707
E-mail: info@gypsum.org
Internet: http://www.gypsum.org

HARDWOOD PLYWOOD AND VENEER ASSOCIATION (HPVA)
P.O. Box 2789
Reston, VA 20195-0789
Ph: 703-435-2900
Fax: 703-435-2537
E-mail: hpva@hpva.org
Internet: http://www.hpva.org

HEAT EXCHANGE INSTITUTE (HEI)
1300 Sumner Avenue
Cleveland, OH 44115-2851
Ph: 216-241-7333
Fax: 216-241-0105
E-mail: hei@heatexchange.org
Internet: http://www.heatexchange.org

HOIST MANUFACTURERS INSTITUTE (HMI)

8720 Red Oak Boulevard, Suite 201
Charlotte, NC 28217
Ph: 704-676-1190
Fax: 704-676-1199
E-mail: hmi@mhia.org
Internet: http://www.mhia.org/psc/PSC Products Hoists.cfm

H.P. WHITE LABORATORY (HPW)
3114 Scarboro Road
Street, MD 21154
Ph: 410-838-6550
Fax: 410-838-2802
E-mail: info@hpwhite.com
Internet: http://www.hpwhite.com

HYDRAULIC INSTITUTE (HI)
9 Sylvan Way
Parsippany, NJ 07054-3802
Ph: 973-267-9700
Fax: 973-267-9055
E-mail: webmaster@pumps.org
Internet: http://www.pumps.org

HYDRONICS INSTITUTE DIVISION OF GAMA (HYI)
35 Russo Place
P.O. Box 218
Berkeley Heights, NJ 07922-0218
Ph: 908-464-8200
Fax: 908-464-7818
E-mail: information@gamanet.org
Internet: http://www.gamanet.org/publist/hydroordr.htm

IBM CORPORATION (IBM)

National Publications Support Center
P.O. Box 12195, Building 143

3039 Cornwallis Road
Research Triangle Park, NC 27709
Ph: 800-879-2755, Option 1
Fax: 800-244-4652
E-mail: wwg9.dk.ibm.com
Internet: http://www.ibm.com/shop/publications/order

ILLUMINATING ENGINEERING SOCIETY OF NORTH AMERICA (IESNA)
120 Wall Street, 17th Floor
New York, NY 10005
Ph: 212-248-5000
Fax: 212-248-5017
E-mail: iesna@iesna.org
Internet: http://www.iesna.org

INDUSTRIAL FASTENERS INSTITUTE (IFI)
1717 East 9th Street, Suite 1105
Cleveland, OH 44114-2879
Ph: 216-241-1482
Fax: 216-241-5901
E-mail: IFI-orders@indfast.org
Internet: http://www.industrial-fasteners.org

INSECT SCREENING WEAVERS ASSOCIATION (ISWA)
DEFUNCT in 1997

INSTRUCTIONS AND STANDARDS FOR NAVBASE GUANTANAMO BAY CUBA
(COMNAVBASEGTMOINST)

INTERNATIONAL AIR TRANSPORT ASSOCIATION (IATA)
703 Waterford Way (NW 62nd Avenue), Suite 600
Miami, FL 33126
Ph: 305-264-7772
Fax: 305-264-8088
Internet: http://www.iata.org

INSTITUTE OF CLEAN AIR COMPANIES (ICAC)
1660 L Street, NW, Suite 1100
Washington, DC 20036-5603
Ph: 202-457-0911
Fax: 202-331-1388
E-mail: jsmith@icac.com
Internet: http://icac.com

INSTITUTE OF ELECTRICAL AND ELECTRONICS ENGINEERS (IEEE)
445 Hoes Lane
Piscataway, NJ 08855-1331
Ph: 732-981-0060
Fax: 732-981-1712
E-mail: customer-services@ieee.org
Internet: http://www.ieee.org

INSTITUTE OF ENVIRONMENTAL SCIENCES AND TECHNOLOGY (IEST)
5005 Newport Drive, Suite 506
Rolling Meadows, IL 60008-3841
Ph: 847-255-1561
Fax: 847-255-1699
E-mail: iest@iest.org

Internet: http://www.iest.org

INSULATED CABLE ENGINEERS ASSOCIATION (ICEA)
P.O. Box 1568
Carrollton, GA 30112
Ph: 770-830-0369
Fax: 770-830-8501
Internet: http://www.icea.net

INSULATING GLASS MANUFACTURERS ALLIANCE (IGMA)

27 Goulburn Avenue
Ottawa, Ontario CANADA K1N 8C7
Ph: 613-233-1510
Fax: 613-233-1929
E-mail: info@igmaonline.org
Internet: http://www.igmaonline.org

INTERNATIONAL CODE COUNCIL (ICC)
5203 Leesburg Pike, Suite 600
Falls Church, VA 22041
Ph: 703-931-4533
Fax: 703-379-1546
E-mail: webmaster@iccsafe.org
Internet: http://www.intlcode.org

INTERNATIONAL CONCRETE REPAIR INSTITUTE (ICRI)
3166 South River Road, Suite 132
Des Plaines, IL 60018
Ph: 847-827-0830
Fax: 847-827-0832
Internet: http://www.icri.org

INTERNATIONAL CONFERENCE OF BUILDING OFFICIALS (ICBO)
5360 Workman Mill Road
Whittier, CA 90601-2298
Ph: 800-284-4406 and 562-699-0541
Fax: 562-692-3853
Internet: http://www.icbo.org

INTERNATIONAL ELECTRICAL TESTING ASSOCIATION (NETA)

P.O. Box 687
106 Stone Street
Morrison, CO 80465
Ph: 303-697-8441
Fax: 303-697-8431
E-mail: neta@netaworld.org
Internet: http://www.netaworld.org

INTERNATIONAL ELECTROTECHNICAL COMMISSION (IEC)
3, rue de Varembe, P.O. Box 131
CH-1211 Geneva 20, Switzerland
Ph: 41-22-919-0211
Fax: 41-22-919-0300
E-mail: custserv@iec.ch
Internet: http://www.iec.ch

INTERNATIONAL GROUND SOURCE HEAT PUMP ASSOCIATION (IGSHPA)
Oklahoma State University
499 Cordell South
Stillwater OK 74078-8018
Ph: 800-626-4747; 405-744-5175
Fax: 405-744-5283
Internet: http://www.igshpa.okstate.edu/

INTERNATIONAL INSTITUTE OF AMMONIA REFRIGERATION (IIAR)
1110 North Glebe Road, Suite 250
Arlington, VA 22201
Ph: 703-312-4200
Fax: 703-312-0065
E-mail: info@iiar.org
Internet: http://www.iiar.org

INTERNATIONAL MUNICIPAL SIGNAL ASSOCIATION (IMSA)
P.O. Box 539
165 East Union Street
Newark, NY 14513-0539
Ph: 315-331-2182 and 800-723-4672
Fax: 315-331-8205
E-mail: info@imsasafety.org
Internet: http://www.imsasafety.org/

INTERNATIONAL ORGANIZATION FOR STANDARDIZATION (ISO)
1, rue de Varembe'
Case Postale 56
CH-1211 Geneve 20 Switzerland
Ph: 41-22-749-0111
Fax: 41-22-733-3430
E-mail: central@iso.ch
Internet: http://www.iso.ch

INTERNATIONAL SLURRY SURFACING ASSOCIATION (ISSA)
3 Church Circle, PMB 250
Annapolis, MD 21401
Ph: 410-267-0023
Fax: 410-267-7546
E-mail: krissoff@slurry.org
Internet: http://www.slurry.org

INTERNATIONAL TELECOMMUNICATION UNION (ITU)
For documents not available from Dept of Commerce:
Sales Service
International Telecommunication Union
Place des Nations
CH-1211 Geneve 20 Switzerland
Ph: 41-22-730-5111
Fax: 41-22-733-7256
E-mail: itumail@itu.int
Internet: http://www.itu.org

For documents available from Dept of Commerce:
U.S. Dept of Commerce
National Technical Information Service (NTIS)
5285 Port Royal Road
Springfield, VA 22161
Ph: 703-605-6585

FAX: 703-605-6887
E-mail: info@ntis.gov
Internet: http://www.ntis.gov

IPC - ASSOCIATION CONNECTING ELECTRONICS INDUSTRIES (IPC)
2215 Sanders Road
Northbrook, IL 60062-6135
Ph: 847-509-9700
Fax: 847-509-9798
E-mail: orderipc@ipc.org
Internet: http://www.ipc.org

ISA - THE INSTRUMENTATION, SYSTEMS AND AUTOMATION SOCIETY (ISA)
67 Alexander Drive
P.O. Box 12277
Research Triangle Park, NC 27709
Ph: 919-549-8411
Fax: 919-549-8288
E-mail: info@isa.org
Internet: http://www.isa.org

ITALIAN LAWS AND DECREES (D.M.)
Unable to locate organization or documents.

KITCHEN CABINET MANUFACTURERS ASSOCIATION (KCMA)
1899 Preston White Drive
Reston, VA 20191-5435
Ph: 703-264-1690
Fax: 703-620-6530
Internet: http://www.kcma.org

L.H. BAILEY HORTORIUM (LHBH)
Dept of Plant Biology
c/o Cornell University
228 Plant Science Building
Ithaca, NY 14853
Ph: 607-255-4477
Internet: http://www.plantbio.cornell.edu/Hort.php

MANUFACTURERS STANDARDIZATION SOCIETY OF THE VALVE AND FITTINGS INDUSTRY (MSS)
127 Park Street, NE
Vienna, VA 22180-4602
Ph: 703-281-6613
Fax: 703-281-6671
E-mail: info@mss-hq.com
Internet: http://www.mss-hq.com

MAPLE FLOORING MANUFACTURERS ASSOCIATION (MFMA)
60 Revere Drive, Suite 500
Northbrook, IL 60062
Ph: 847-480-9138
Fax: 847-480-9282
E-mail: mfma@maplefloor.org
Internet: http://www.maplefloor.org

MARBLE INSTITUTE OF AMERICA (MIA)
28901 Clemens Road, Suite 100
Westlake, OH 44145

Ph: 440-250-9222
Fax: 440-250-9223
E-mail: info@marble-institute.com
Internet: http://www.marble-institute.com

MASTER PAINTERS INSTITUTE (MPI)
4090 Graveley Street
Burnaby, BC CANADA V5C 3T6
Ph: 888-674-8937
Fax: 888-211-8708
E-mail: info@paintinfo.com
Internet: http://www.paintinfo.com/mpi

METAL BUILDING MANUFACTURERS ASSOCIATION (MBMA)
1300 Sumner Avenue
Cleveland, OH 44115-2851
Ph: 216-241-7333
Fax: 216-241-0105
E-mail: mbma@mbma.com
Internet: http://www.mbma.com

METAL LATH/STEEL FRAMING ASSOCIATION (ML/SFA)
Absorbed by NAAMM. Document is available from NAAMM.

MIDWEST INSULATION CONTRACTORS ASSOCIATION (MICA)
16712 elm Circle
Omaha, NE 68130
Ph: 800-747-6422
Fax: 402-330-9702
Internet: http://www.micainsulation.org

MONORAIL MANUFACTURERS ASSOCIATION (MMA)
8720 Red Oak Boulevard, Suite 201
Charlotte, NC 28217
Ph: 704-676-1190
Fax: 704-676-1199
E-mail: mma@mhia.org
Internet: http://www.mhia.org/mma

NACE INTERNATIONAL (NACE)
1440 South Creek Drive
Houston, TX 77084-4906
Ph: 281-228-6200
Fax: 281-228-6300
Internet: http://www.nace.org

NATIONAL ASSOCIATION OF ARCHITECTURAL METAL MANUFACTURERS (NAAMM)
8 South Michigan Avenue, Suite 1000
Chicago, IL 60603
Ph: 312-322-0405
Fax: 312-332-0706
E-mail: naamm@gss.net
Internet: http://www.naamm.org

NATIONAL BOARD OF BOILER AND PRESSURE VESSEL INSPECTORS (NBBPVI)
1055 Crupper Avenue
Columbus, OH 43229-1183
Ph: 614-888-8320
Fax: 614-847-1147

Internet: http://www.nationalboard.org

NATIONAL CABLE AND TELECOMMUNICATIONS ASSOCIATION (NCTA)
1724 Massachusetts Avenue, NW
Washington, DC 20036
Ph: 202-775-3550
Fax: 202-775-1055
E-mail: webmaster@ncta.com
Internet: http://www.ncta.com

NATIONAL CONCRETE MASONRY ASSOCIATION (NCMA)
13750 Sunrise Valley Drive
Herndon, VA 20171-4662
Ph: 703-713-1900
Fax: 703-713-1910
E-mail: recepti@ncma.org
Internet: http://www.ncma.org

NATIONAL COUNCIL ON RADIATION PROTECTION AND MEASUREMENTS (NCRP)
7910 Woodmont Avenue, Suite 400
Bethesda, MD 20814-3095
Ph: 301-657-2652
Fax: 301-907-8768
E-mail: ncrp@ncrp.com
Internet: http://www.ncrp.com

NATIONAL DRILLING ASSOCIATION (NDA)

11001 Danka Way North, Suite 1
St. Petersburg, FL 33716
Ph: 727-577-5006
Fax: 727-577-5012
E-mail: info@nda4u.com
Internet: http://www.nda4u.com/

NATIONAL ELECTRICAL MANUFACTURERS ASSOCIATION (NEMA)
1300 North 17th Street, Suite 1847
Rosslyn, VA 22209
Ph: 703-841-3200
Fax: 703-841-5900
E-mail: webmaster@nema.org
Internet: http://www.nema.org/

NATIONAL ENVIRONMENTAL BALANCING BUREAU (NEBB)
8575 Grovemont Circle
Gaithersburg, MD 20877
Ph: 301-977-3698
Fax: 301-977-9589
Internet: http://www.nebb.org

NATIONAL FENESTRATION RATING COUNCIL (NFRC)
8484 Georgia Avenue, Suite 320
Silver Spring, MD 20910
Ph: 301-589-1776
Fax: 303-589-3884
E-Mail: info@nfrc.org
Internet: http://www.nfrc.org

NATIONAL FIRE PROTECTION ASSOCIATION (NFPA)
1 Batterymarch Park
Quincy, MA 02169-7471
Ph: 617-770-3000
Fax: 617-770-0700
E-mail: webmaster@nfpa.org
Internet: http://www.nfpa.org

NATIONAL FLUID POWER ASSOCIATION (NFLPA)
3333 North Mayfair Road
Milwaukee, WI 53222-3219
Ph: 414-778-3344
Fax: 414-778-3361
E-mail: nfpa@nfpa.com
Internet: http://www.nfpa.com

NATIONAL HARDWOOD LUMBER ASSOCIATION (NHLA)
6830 Raleigh LaGrange Road
Memphis, TN 38184-0518
Ph: 901-377-1818
Fax: 901-382-6419
E-mail: info@natlhardwood.org
Internet: http://www.natlhardwood.org

NATIONAL INSTITUTE FOR CERTIFICATION IN ENGINEERING TECHNOLOGIES (NICET)
1420 King Street
Alexandria, VA 22314-2794
Ph: 888-476-4238
E-mail: tech@nicet.org
Internet: http://www.nicet.org

NATIONAL INSTITUTE FOR OCCUPATIONAL SAFETY AND HEALTH (NIOSH)
Mail Stop C-13
4676 Columbia Parkway
Cincinnati, OH 45226-1998
Ph: 800-356-4674
Fax: 513-533-8573
E-mail: pubstaff@cdc.gov
Internet: http://www.cdc.gov/niosh/homepage.html

NATIONAL INSTITUTE OF JUSTICE (NIJ)
National Law Enforcement and Corrections Technology Center
2277 Research Boulevard - Mailstop 8J
Rockville, MD 20850
Ph: 800-248-2742 or 301-519-5060
Fax: 301-519-5149
E-mail: asknlectc@nlectc.org
Internet: http://www.nlectc.org

NATIONAL INSTITUTE OF STANDARDS AND TECHNOLOGY (NIST)
100 Bureau Drive
Stop 3460
Gaithersburg, MD 20899-3460
Ph: 301-975-NIST
Internet: http://www.nist.gov
Order Publications From:
Superintendent of Documents
U.S. Government Printing Office (GPO)

732 North Capitol Street, NW
Washington, DC 20401
Ph: 888-293-6498 or 202-512-1530
Fax: 202-512-1262
E-mail: gpoaccess@gpo.gov
Internet: http://www.gpoaccess.gov
or
National Technical Information Service (NTIS)
5285 Port Royal Road
Springfield, VA 22161
Ph: 703-605-6585
Fax: 703-605-6900
E-mail: info@ntis.gov
Internet: http://www.ntis.gov

NATIONAL LIME ASSOCIATION (NLA)

200 North Glebe Road, Suite 800
Arlington, VA 22203
Ph: 703-243-5463
Fax: 703-243-5489
E-mail: natlime@lime.org
Internet: http://www.lime.org

NOFMA: THE WOOD FLOORING MANUFACTURERS ASSOCIATION (NOFMA)
P.O. Box 3009
Memphis, TN 38173-0009
Ph: 901-526-5016
Fax: 901-526-7022
E-mail: info@nofma.org
Internet: http://www.nofma.org

NATIONAL READY MIXED CONCRETE ASSOCIATION (NRMCA)
900 Spring Street
Silver Spring, MD 20910
Ph: 301-587-1400
Fax: 301-585-4219
Internet: http://www.nrmca.org

NATIONAL ROOFING CONTRACTORS ASSOCIATION (NRCA)
10255 West Higgins Road, Suite 600
Rosemont, IL 60018
Ph: 847-299-9070
Fax: 847-299-1183
Internet: http://www.nrca.net

NATIONAL TERRAZZO & MOSAIC ASSOCIATION (NTMA)
201 North Maple Avenue, Suite 208
Purcellville, VA 20132
Ph: 540-751-0930 or 800-323-9736
Fax: 540-751-0935
E-mail: info@ntma.com
Internet: http://www.ntma.com

NATURAL RESOURCE, AGRICULTURAL AND ENGINEERING SERVICE (NRAES)

Cooperative Extension
P.O. Box 4557
Ithaca, NY 14852-4557

Ph: 607-255-7654
Fax: 607-254-8770
E-mail: nraes@cornell.edu
Internet: http://www.nraes.org

NORTH AMERICAN INSULATION MANUFACTURERS ASSOCIATION (NAIMA)
44 Canal Center Plaza, Suite 310
Alexandria, VA 22314
Ph: 703-684-0084
Fax: 703-684-0427
E-mail: insulation@naima.org
Internet: http://www.naima.org

NORTHEASTERN LUMBER MANUFACTURERS ASSOCIATION (NELMA)
272 Tuttle Road
P.O. Box 87A
Cumberland Center, ME 04021
Ph: 207-829-6901
Fax: 207-829-4293
E-mail: info@nelma.org
Internet: http://www.nelma.org

NSF INTERNATIONAL (NSF)
789 North Dixboro Road
P.O. Box 130140
Ann Arbor, MI 48113-0140
Ph: 734-769-8010 or 800-NSF-MARK
Fax: 734-769-0109
E-mail: info@nsf.org
Internet: http://www.nsf.org

ORGANISATION FOR ECONOMIC CO-OPERATION AND DEVELOPMENT (OECD)
2, rue Andre Pascal
F-75775 Paris Cedex 16
France
Ph: + 33 1 45 24 82 00
E-mail: bookshop@oecd.org
Internet: http://www.oecd.org

PIPE FABRICATION INSTITUTE (PFI)
666 5th Avenue, #325
New York, NY 10103
Ph: 514-634-3434
Fax: 514-634-9736
E-mail: pfi@pfi-institute.org
Internet: http://www.pfi-institute.org

PLASTIC PIPE AND FITTINGS ASSOCIATION (PPFA)
800 Roosevelt Road, Building C, Suite 20
Glen Ellyn, IL 60137
Ph: 630-858-6540
Fax: 630-790-3095
Internet: http://www.ppfahome.org

PLASTICS PIPE INSTITUTE (PPI)
1825 Connecticut Avenue, NW, Suite 680
Washington, D.C. 20009
Ph: 202-462-9607
Fax: 202-462-9779

Internet: http://www.plasticpipe.org

PLUMBING AND DRAINAGE INSTITUTE (PDI)
800 Turnpike Street, Suite 300
North Andover, MA 01845
Ph: 978-557-0720 or 800-589-8956
Fax: 978-557-0721
E-Mail: info@pdionline.org
Internet: http://www.pdionline.org

PLUMBING AND MECHANICAL CONTRACTORS ASSOCIATION (PMCA)
8600 SW Saint Helens Drive, Suite 200
Wilsonville, OR 97217
Ph: 503-682-7919
Fax: 503-682-6241
Internet: http://www.pmcaoregon.com/

PLUMBING-HEATING-COOLING CONTRACTORS NATIONAL ASSOCIATION (PHCC)
180 South Washington Street
P.O. Box 6808
Falls Church, VA 22040
Ph: 800-533-7694 or 703-237-8100
Fax: 703-237-7442
E-mail: naphcc@naphcc.org
Internet: http://www.phccweb.org

PORCELAIN ENAMEL INSTITUTE (PEI)
PO Box 920220
Norcross, GA 30010
Ph: 770-281-8980
Fax: 770-281-8981
E-mail: penamel@aol.com
Internet: http://www.porcelainenamel.com

POST-TENSIONING INSTITUTE (PTI)
8601 North Black Canyon Highway, Suite 103
Phoenix, AZ 85021
Ph: 602-870-7540
Fax: 602-870-7541
E-mail: info@post-tensioning.org
Internet: http://www.post-tensioning.org/

PRECAST/PRESTRESSED CONCRETE INSTITUTE (PCI)
209 West Jackson Boulevard
Chicago, IL 60606-6938
Ph: 312-786-0300
Fax: 312-786-0353
E-mail: info@pci.org
Internet: http://www.pci.org

REDWOOD INSPECTION SERVICE (RIS) OF THE CALIFORNIA REDWOOD ASSOCIATION (CRA)

405 Enfrente Drive, Suite 200
Novato, CA 94949
Ph: 415-382-0662 or 888-225-7339
Fax: 415-382-8531
E-Mail: info@calredwood.org
Internet: http://www.calredwood.org

RUBBER MANUFACTURERS ASSOCIATION (RMA)

1400 K Street, NW, Suite 900
Washington, DC 20005
Ph: 202-682-4800
Fax: 202-682-4854
E-mail: info@rma.org
Internet: http://www.rma.org

SCIENTIFIC CERTIFICATION SYSTEMS (SCS)

2000 Powell Street, Suite 1350
Emeryville, CA 94608
Ph: 510-452-8000
Fax: 510-452-8001
E-mail: webmaster@scscertified.com
Internet: http://www.scs1.com

SCREEN MANUFACTURERS ASSOCIATION (SMA)
2850 South Ocean Boulevard, Suite 114
Palm Beach, FL 33480-6205
Ph: 561-533-0991
Fax: 561-533-7466
E-mail: fitzgeraldfscott@aol.com
Internet: http://www.smacentral.org

SEMICONDUCTOR EQUIPMENT AND MATERIALS INTERNATIONAL (SEMI)

3081 Zanker Road
San Jose, CA 95134
Ph: 408-943-6900
Fax: 408-428-9600
E-mail: semihq@semi.org
Internet: http://www.semi.org

SHEET METAL AND AIR CONDITIONING CONTRACTORS' NATIONAL ASSOCIATION (SMACNA)
4201 Lafayette Center Drive
Chantilly, VA 20151-1209
Ph: 703-803-2980
Fax: 703-803-3732
E-mail: info@smacna.org
Internet: http://www.smacna.org

SPRI (SPRI)
77 Rumford Avenue, Suite 3B
Waltham, MA 02453
Ph: 781-647-7026
Fax: 781-647-7222
E-mail: info@spri.org
Internet: http://www.spri.org

SOCIETY OF AUTOMOTIVE ENGINEERS INTERNATIONAL (SAE)
400 Commonwealth Drive
Warrendale, PA 15096-0001
Ph: 724-776-4841
Fax: 724-776-0790

E-mail: customerservice@sae.org
Internet: http://www.sae.org

SOCIETY OF MOTION PICTURE AND TELEVISION ENGINEERS (SMPTE)

595 West Hartsdale Avenue
White Plains, New York 10607
Ph: 914-761-1100
Fax: 914-761-3115
E-mail: smpte@smpte.org
Internet: http://www.smpte.org

SPRAY POLYURETHANE FOAM ALLIANCE (SPFA)

4400 Fair Lakes Court, Suite 105
Fairfax, VA 22033
Ph: 800-523-6154
Fax: 703-222-5816
Internet: http://www.sprayfoam.org

SOLAR RATING AND CERTIFICATION CORPORATION (SRCC)

c/o FSEC, 1679 Clearlake Road
Cocoa, FL 32922-5703
Ph: 321-638-1537
Fax: 321-638-1010
E-mail: srcc@fsec.ucf.edu
Internet: http://www.solar-rating.org

SOUTH COAST AIR QUALITY MANAGEMENT DISTRICT (SCAQMD)
21865 Copley Drive
Diamond Bar, CA 91765-4182
Ph: 1-800-CUT-SMOG or 909-396-2000
E-mail: webinquiry@aqmd.gov
Internet: http://www.aqmd.gov

SOUTHERN CYPRESS MANUFACTURERS ASSOCIATION (SCMA)
400 Penn Center Boulevard, Suite 530
Pittsburgh, PA 15235
Ph: 412-829-0770 or 877-607-SCMA
Fax: 412-829-0844
Internet: http://www.cypressinfo.org

SOUTHERN PINE INSPECTION BUREAU (SPIB)
4709 Scenic Highway
Pensacola, FL 32504-9094
Ph: 850-434-2611
Fax: 850-433-5594
E-mail: spib@spib.org
Internet: http://www.spib.org

STATE OF CALIFORNIA DEPARTMENT OF TRANSPORTATION (CDT)
Publication Distribution Unit
1900 Royal Oaks Dr.
Sacramento, CA 95815-3800
Ph: 916-445-3520
Fax: 916-324-8997
E-mail: publications@dot.ca.gov
Internet: http://www.dot.ca.gov

STATE OF MARYLAND CODE OF MARYLAND REGULATIONS (COMAR)
Division of State Documents
1700 Margaret Avenue
Annapolis, MD 21401
PH: 410-974-2486x5725
E-mail: support@sos.state.md.us
Internet: www.dsd.state.md.us/comar/

STATE OF VIRGINIA ADMINISTRATIVE CODE (VAC)
Virginia Code Commission
General Assembly Building, 2nd Floor
910 Capitol Street
Richmond, Virginia 23219
Ph: 804-786-3591
Fax: 804-692-0625
Internet: http://legis.state.va.us/laws/admincode.htm

STEEL DECK INSTITUTE (SDI)
P.O. Box 25
Fox River Grove, IL 60021
Ph: 847-458-4647
Fax: 847-458-4648
E-mail: Steve@sdi.org
Internet: http://www.sdi.org

STEEL DOOR INSTITUTE (SDI)
30200 Detroit Road
Cleveland, OH 44145-1967
Ph: 440-899-0010
Fax: 440-892-1404
Internet: http://www.steeldoor.org

STEEL JOIST INSTITUTE (SJI)
3127 Tenth Avenue, North Extension
Myrtle Beach, SC 29577-6760
Ph: 843-626-1995
Fax: 843-626-5565
E-mail: sji@steeljoist.org
Internet: http://www.steeljoist.org

STEEL TANK INSTITUTE (STI)
570 Oakwood Road
Lake Zurich, IL 60047
Ph: 847-438-8265
Fax: 847-438-8766
Internet: http://www.steeltank.com

STEEL WINDOW INSTITUTE (SWI)
1300 Sumner Avenue
Cleveland, OH 44115-2851
Ph: 216-241-7333
Fax: 216-241-0105
E-mail: swi@steelwindows.com
Internet: http://www.steelwindows.com

TECHNICAL ASSOCIATION OF THE PULP AND PAPER INDUSTRY (TAPPI)

15 Technology Parkway South

Norcross, GA 30092
Ph: 800-322-8686 or 770-446-1400
Fax: 770-446-6947
E-mail: memberconnection@tappi.org
Internet: http://www.tappi.org

THE SOCIETY FOR PROTECTIVE COATINGS (SSPC)
40 24th Street, 6th Floor
Pittsburgh, PA 15222-4656
Ph: 412-281-2331
Fax: 412-281-9992
E-mail: info@sspc.org
Internet: http://www.sspc.org

TILE COUNCIL OF AMERICA (TCA)
100 Clemson Research Boulevard
Anderson, SC 29625
Ph: 864-646-8453
Fax: 864-646-2821
E-mail: literature@tileusa.com
Internet: http://www.tileusa.com

TRUSS PLATE INSTITUTE (TPI)
583 D'Onofrio Drive, Suite 200
Madison, WI 53719
Ph: 608-833-5900
Fax: 608-833-4360
Internet: http://www.tpinst.org

TUBULAR EXCHANGER MANUFACTURERS ASSOCIATION (TEMA)
25 North Broadway
Tarrytown, NY 10591
Ph: 914-332-0040
Fax: 914-332-1541
E-mail: tema@tema.org
Internet: http://www.tema.org

TURFGRASS PRODUCERS INTERNATIONAL (TPI)
1855-A Hicks Road
Rolling Meadows, IL 60008
Ph: 847-705-9898 or 800-405-8873
Fax: 847-705-8347
E-mail: info@turfgrasssod.org
Internet: http://www.turfgrasssod.org

UNDERWRITERS LABORATORIES (UL)
333 Pfingsten Road
Northbrook, IL 60062-2096
Ph: 847-272-8800
Fax: 847-272-8129
E-mail: northbrook@us.ul.com
Internet: http://www.ul.com/

UNI-BELL PVC PIPE ASSOCIATION (UBPPA)
2655 Villa Creek Drive, Suite 155
Dallas, TX 75234
Ph: 972-243-3902
Fax: 972-243-3907
E-mail: info@uni-bell.org

Internet: http://www.uni-bell.org

U.S. AIR FORCE (USAF)
Air Force Publishing Distribution Center
Ph: 410-687-3330
Fax: 410-436-4629
E-mail: afpdc-service@pentagon.af.mil
Internet: http://www.e-publishing.af.mil/

U.S. ARMY (DA)
U.S. Army Publishing Directorate
Internet: http://www.apd.army.mil
AOK: 5/04
LOK: 5/04

U.S. ARMY CENTER FOR HEALTH PROMOTION AND PREVENTIVE MEDICINE (USACHPPM)
5158 Blackhawk Road
Aberdeen Proving Ground, MD 21010-5403
Ph: 800-222-9698
Internet: http://chppm-www.apgea.army.mil

U.S. ARMY CORPS OF ENGINEERS (USACE)
Order CRD-C DOCUMENTS from:
U.S. Army Engineer Waterways Experiment Station
ATTN: Technical Report Distribution Section, Services Branch, TIC
3909 Halls Ferry Road
Vicksburg, MS 39180-6199
Ph: 601-634-2664
Fax: 601-634-2388
E-mail: mtc-info@erdc.usace.army.mil
Internet: http://www.wes.army.mil/SL/MTC/handbook.htm

Order Other Documents from:
USACE Publications Depot
Attn: CEIM-IM-PD
2803 52nd Avenue
Hyattsville, MD 20781-1102
Ph: 301-394-0081
Fax: 301-394-0084
E-mail: pubs-army@usace.army.mil
Internet: http://www.usace.army.mil/publications
or http://www.hnd.usace.army.mil/techinfo/engpubs.htm

U.S. ARMY RESEARCH, DEVELOPMENT, AND ENGINEERING COMMAND (EA)
45183 Blackhawk Road
Aberdeen Proving Ground, MD 21010-5423
Ph: 410-671-5770
Internet: http://www.rdecom.army.mil

U.S. ARMY ENVIRONMENTAL CENTER (AEC)
5179 Hoadley Road
Aberdeen Proving Ground, MD 21010-5401
Internet: http://aec.army.mil/usaec
Order from:
National Technical Information Service (NTIS)
5285 Port Royal Road
Springfield, VA 22161

Ph: 703-605-6585
Fax: 703-605-6900
E-mail: info@ntis.gov
Internet: http://www.ntis.gov

U.S. BUREAU OF RECLAMATION (BOR)
Denver Federal Center
P.O. Box 25007
Denver, CO 80225
Ph: 303-445-2072
Fax: 303-445-6303
Internet: http://www.usbr.gov
Order from:
National Technical Information Service (NTIS)
5285 Port Royal Road
Springfield, VA 22161
Ph: 703-605-6585
Fax: 703-605-6900
E-mail: info@ntis.gov
Internet: http://www.ntis.gov

U.S. DEFENSE INFORMATION SYSTEMS AGENCY (DISA)
Washington, DC 20305-2000
Internet:http://www.disa.mil

U.S. DEFENSE INTELLIGENCE AGENCY (DIA)
Defense Intelligence Analysis Center (DIAC)
MacDill Boulevard and Luke Avenue
Bolling AFB, MD
Internet: http://www.dia.mil

U.S. DEFENSE LOGISTICS AGENCY (DLA)
Andrew T. McNamara Building
8725 John J. Kingman Road
Fort Belvoir, VA 22060
Internet: http://www.dla.mil

U.S. DEPARTMENT OF AGRICULTURE (USDA)
Order AMS Publications from:
AGRICULTURAL MARKETING SERVICE (AMS)
Seed Regulatory and Testing Branch
801 Summit Crossing Place, Suite C
Gastonia, NC 28054-2193
Ph: 704-810-8870
Fax: 704-852-4189
Internet: http://www.ams.usda.gov/lsg/seed.htm
E-mail: seed.ams@usda.gov

Order Other Publications from:
U.S. Department of Agriculture, Rural Utilities Service
14th and Independence Avenue, SW, Room 4028-S
Washington, DC 20250
Ph: 202-720-2791
Fax: 202-720-2166
Internet: http://www.usda.gov/rus

U.S. DEPARTMENT OF COMMERCE (DOC)
1401 Constitution Avenue, NW
Washington, DC 20230

Ph: 202-482-4883
Internet: http://www.commerce.gov/

Order Publications From:
National Technical Information Service (NTIS)
5285 Port Royal Road
Springfield, VA 22161
Ph: 703-605-6585
Fax: 703-605-6900
E-mail: info@ntis.gov
Internet: http://www.ntis.gov

U.S. DEPARTMENT OF DEFENSE (DOD)
Directorate for Public Inquiry and Analysis
Office of the Secretary of Defense (Public Affairs)
Room 3A750 -- The Pentagon
1400 Defense Pentagon
Washington, DC 20301-1400
Ph: 703-428-0711
E-mail: pia@hq.afis.asd.mil
Internet: http://www.dod.gov

Order DOD Documents from:
National Technical Information Service (NTIS)
5285 Port Royal Road
Springfield, VA 22161
Ph: 703-605-6585
FAX: 703-605-6900
E-mail: info@ntis.gov
Internet: http://www.ntis.gov

Order Military Specifications, Standards and Related Publications from:
Department of Defense Single Stock Point for (DODSSP)
Defense Automation and Production Service (DAPS)
Building 4D
700 Robbins Avenue
Philadelphia, PA 19111-5098
Ph: 215-697-2179
Fax: 215-697-1462
Internet: http://www.dodssp.daps.mil

U.S. DEPARTMENT OF HOUSING AND URBAN DEVELOPMENT (HUD)
Order from:
HUD User
P.O. Box 23268
Washington, DC 20026-3268
Ph: 800-245-2691
Fax: 202-708-9981
E-mail: Huduser@aspensys.com
Internet: http://www.huduser.org

U.S. DEPARTMENT OF STATE (SD)
2201 C Street, NW
Washington, DC 20520
Ph: 202-647-4000
Internet: http://www.state.gov

U.S. DEPARTMENT OF TRANSPORTATION (DOT)
400 7th Street, SW
Washington, DC 20590
Ph: 202-366-4000
Internet: http://www.dot.gov

U.S. ENVIRONMENTAL PROTECTION AGENCY (EPA)
Ariel Rios Building
1200 Pennsylvania Avenue, N.W.
Washington, DC 20460
Ph: 202-272-0167
Internet: http://www.epa.gov

NOTE --- Some documents are available only from:
National Technical Information Service (NTIS)
5285 Port Royal Road
Springfield, VA 22161
Ph: 703-605-6585
Fax: 703-605-6900
E-mail: info@ntis.gov
Internet: http://www.ntis.gov

U.S. FEDERAL AVIATION ADMINISTRATION (FAA)
Order for sale documents from:
Superintendent of Documents
U.S. Government Printing Office (GPO)
732 North Capitol Street, NW
Washington, DC 20401
PH: 888-293-6498 or 202-512-1530
Fax: 202-512-1262
E-mail: gpoaccess@gpo.gov
Internet: http://www.gpoaccess.gov

Order free documents from:
Federal Aviation Administration
Department of Transportation
800 Independence Avenue, SW
Washington, DC 20591
Internet: http://www.faa.gov

U.S. FEDERAL COMMUNICATIONS COMMISSION (FCC)

445 12th Street SW
Washington, DC 20554
Phone: 888-CALL-FCC
Fax: 866-418-0232
Internet: http://www.fcc.gov
E-mail: fccinfo@fcc.gov
Order Publications From:
Superintendent of Documents
U.S. Government Printing Office (GPO)
732 North Capitol Street, NW
Washington, DC 20401
Ph: 888-293-6498 or 202-512-1530
Fax: 202-512-1262
E-mail: gpoaccess.gov
Internet: http://www.gpoaccess.gov

U.S. FEDERAL EMERGENCY MANAGEMENT AGENCY (FEMA)
500 C Street, SW
Washington, D.C. 20472
Ph: 202-566-1600
Internet: http://www.fema.gov

U.S. FEDERAL HIGHWAY ADMINISTRATION (FHWA)
Office of Highway Safety (HHS-31)
400 Seventh Street, SW
Washington, DC 20590-0001
Ph: 202-366-0411
Fax: 202-366-2249
Internet: http://www.fhwa.dot.gov
Order from:

Superintendent of Documents
U. S. Government Printing Office (GPO)
732 North Capitol Street, NW
Washington, DC 20401
Ph: 888-293-6498 or 202-512-1530
Fax: 202-512-1262
E-mail: gpoaccess.gpo
Internet: http://www.gpoaccess.gov

U. S. GREEN BUILDING COUNCIL (USGBC)
1015 18th Street, NW, Suite 805
Washington, D.C. 20036
Ph: 202-828-7422
Fax: 202-828-5110
Internet: http://www.usgbc.org
AOK: 2/04
LOK: 2/04

U.S. GENERAL SERVICES ADMINISTRATION (GSA)
General Services Administration
1800 F Street, NW
Washington, DC 20405
Ph: 202-501-1021

Order from:
General Services Administration
Federal Supply Service Bureau
1941 Jefferson Davis Highway
Arlington, VA 22202
Ph: 703-605-5400
Internet: http://apps.fss.gsa.gov/pub/fedspecs/indexcfm

U.S. NATIONAL ARCHIVES AND RECORDS ADMINISTRATION (NARA)
8601 Adelphi Road
College Park, MD 20740-6001
Ph: 866-272-6272
Fax: 301-837-0483
Internet: http://www.archives.gov

Order documents from:
Superintendent of Documents
U.S.Government Printing Office (GPO)
732 North Capitol Street, NW
Washington, DC 20401

Ph: 888-293-6498 or 202-512-1530
Fax: 202-512-1262
E-mail: gpoaccess.gov
Internet: http://www.gpoaccess.gov

U.S. NAVAL FACILITIES ENGINEERING COMMAND (NAVFAC)
1510 Gilbert Street
Norfolk, VA 23511-2699
Ph: 757-322-4200
Fax: 757-322-4416
Internet: http://www.navfac.navy.mil

U.S. NAVAL FACILITIES ENGINEERING SERVICE CENTER (NFESC)
1100 23rd Avenue
Port Hueneme, CA 93043-4370
Ph: 805-982-4980
Internet: http://www.nfesc.navy.mil

WATER ENVIRONMENT FEDERATION (WEF)
601 Wythe Street
Alexandria, VA 22314-1994
Ph: 703-684-2452
Fax: 703-684-2492
E-mail: pubs@wef.org
Internet: http://www.wef.org

WATER QUALITY ASSOCIATION (WQA)
4151 Naperville Road
Lisle, IL 60532
Ph: 630-505-0160
Fax: 630-505-9637
E-mail: info@wqa.org
Internet: http://www.wqa.org

WEST COAST LUMBER INSPECTION BUREAU (WCLIB)
P.O. Box 23145
Portland, OR 97281
Ph: 503-639-0651
Fax: 503-684-8928
E-mail: info@wclib.org
Internet: http://www.wclib.org

WESTERN WOOD PRESERVERS INSTITUTE (WWPI)
7017 N.E. Highway 99 Suite 108
Vancouver, WA 98665
Ph: 360-693-9958
Fax: 360-693-9967
E-mail: info@wwpinstitute.org
Internet: http://www.wwpinstitute.org

WESTERN WOOD PRODUCTS ASSOCIATION (WWPA)
Yeon Building
522 SW 5th Avenue
Suite 500
Portland, OR 97204-2122
Ph: 503-224-3930
Fax: 503-224-3934
E-mail: info@wwpa.org
Internet: http://www.wwpa.org

WINDOW AND DOOR MANUFACTURERS ASSOCIATION (WDMA)
1400 East Touhy Avenue, Suite 470
Des Plaines, IL 60018
Ph: 847-299-5200 or 800-223-2301
Fax: 847-299-1286
E-mail: admin@wdma.com
Internet: http://www.wdma.com

WIRE ROPE TECHNICAL BOARD (WRTB)
Address not available

WOOD MOULDING AND MILLWORK PRODUCERS ASSOCIATION (WMMPA)
507 First Street
Woodland, CA 95695
Ph: 530-661-9591 or 800-550-7889
Fax: 530-661-9586
E-mail: info@wmmpa.com
Internet: http://www.wmmpa.com

-- End of Section --

SECTION 01451

CONTRACTOR QUALITY CONTROL

1.1 REFERENCES

The publications listed below form a part of this specification to the extent referenced. The publications are referred to in the text by basic designation only.

AMERICAN SOCIETY FOR TESTING AND MATERIALS (ASTM)

ASTM D 3740	(1994a) Minimum Requirements for Agencies Engaged in the Testing and/or Inspection of Soil and Rock as Used in Engineering Design and Construction
ASTM E 329	(1995b) Agencies Engaged in the Testing and/or Inspection of Materials Used in Construction

1.2 PAYMENT

Separate payment will not be made for providing and maintaining an effective Quality Control program, and all costs associated therewith shall be included in the applicable unit prices or lump-sum prices contained in the Bidding Schedule.

2.1 GENERAL

The Contractor is responsible for quality control and shall establish and maintain an effective quality control system in compliance with the Contract Clause titled "Inspection of Construction." The quality control system shall consist of plans, procedures, and organization necessary to produce an end product, which complies with the contract requirements. The system shall cover all construction operations, both onsite and offsite, and shall be keyed to the proposed construction sequence. The project superintendent will be held responsible for the quality of work on the job and is subject to removal by the Contracting Officer for non-compliance with quality requirements specified in the contract. The project superintendent in this context shall mean the individual with the responsibility for the overall management of the project including quality and production.

2.2 QUALITY CONTROL PLAN

2.2.1 General

The Contractor shall furnish for review by the Government, not later than 5 days after receipt of notice to proceed, the Contractor Quality Control (CQC) Plan proposed to implement the requirements of the Contract Clause titled "Inspection of Construction." The plan shall identify personnel, procedures, control, instructions, test, records, and forms to be used. The Government will consider an interim plan for the first 60 days of operation. Construction will be permitted to begin only after acceptance of the CQC Plan or acceptance of an interim plan applicable to the particular feature

of work to be started. Work outside of the features of work included in an accepted interim plan will not be permitted to begin until acceptance of a CQC Plan or another interim plan containing the additional features of work to be started.

2.2.2 Content of the CQC Plan

The CQC Plan shall include, as a minimum, the following to cover all construction operations, both onsite and offsite, including work by subcontractors, fabricators, suppliers, and purchasing agents:

a. A description of the quality control organization, including a chart showing lines of authority and acknowledgment that the CQC staff shall implement the three phase control system for all aspects of the work specified. The staff shall include a CQC System Manager who shall report to the project superintendent.

b. The name, qualifications (in resume format), duties, responsibilities, and authorities of each person assigned a CQC function.

c. A copy of the letter to the CQC System Manager signed by an authorized official of the firm which describes the responsibilities and delegates sufficient authorities to adequately perform the functions of the CQC System Manager, including authority to stop work which is not in compliance with the contract. The CQC System Manager shall issue letters of direction to all other various quality control representatives outlining duties, authorities, and responsibilities. Copies of these letters shall also be furnished to the Government.

d. Procedures for scheduling, reviewing, certifying, and managing submittals, including those of subcontractors, offsite fabricators, suppliers, and purchasing agents. These procedures shall be in accordance with Section 01330 SUBMITTAL PROCEDURES.

e. A complete list of all specified control, verification, and acceptance testing procedures for each specific test to include the test name, specification paragraph requiring test, feature of work to be tested, test frequency, approximate date of each test and name of commercial laboratory responsible for each test. The contractor shall obtain a current listing of the Government approved commercial laboratories in the area and verify that the named laboratory is approved to perform the test –as indicated on the list of tests.

Laboratory facilities will be approved by the Contracting Officer.

Approved Testing Laboratories

A composite listing of approved testing laboratories within the South Atlantic Division is available upon request. The Contractor should engage the services of a laboratory contained in the composite list. Contractors may obtain the list by calling (912) 652-5094 or 912 652-5244. Fax requests can be made to Doug Saxon at number 912 652-6016.

f. Procedures for tracking preparatory, initial, and follow-up control phases and control, verification, and acceptance tests including documentation.

g. Procedures for tracking construction deficiencies from identification through acceptable corrective action. These procedures shall establish verification that identified deficiencies have been corrected.

h. Reporting procedures, including proposed reporting formats.

i. A list of the definable features of work.

j. A definable feature of work is a task, which is separate and distinct from other tasks, has separate control requirements, and may be identified by different trades or disciplines, or it may be work by the same trade in a different environment. Although each section of the specifications may generally be considered as a definable feature of work, there are frequently more than one definable features under a particular section.

k. This list will be agreed upon during the coordination meeting.

2.2.3 Acceptance of Plan

Acceptance of the Contractor's plan is required prior to the start of construction. Acceptance is conditional and will be predicated on satisfactory performance during the construction. The Government reserves the right to require the Contractor to make changes in his CQC Plan and operations including removal of personnel, as necessary, to obtain the quality specified.

2.2.4 Notification of Changes

After acceptance of the CQC Plan, the Contractor shall notify the Contracting Officer in writing of any proposed change.

Proposed changes are subject to acceptance by the Contracting Officer.

2.3 COORDINATION MEETING

After the Preconstruction Conference, before start of construction, and prior to acceptance by the Government of the CQC Plan, the Contractor shall meet with the Contracting Officer or Authorized Representative and discuss the Contractor's quality control system.

The CQC Plan shall be submitted for review a minimum of 7 calendar days prior to the Coordination Meeting.

During the meeting, a mutual understanding of the system details shall be developed, including the forms for recording the CQC operations, control activities, testing, administration of the system for both onsite and offsite work, and the interrelationship of Contractor's Management and control with the Government's Quality Assurance.

Minutes of the meeting shall be prepared by the Government and signed by both the Contractor and the Contracting Officer. The minutes shall become a part of the contract file. There may be occasions when subsequent conferences will be called by either party to reconfirm mutual understandings and/or address deficiencies in the CQC system or procedures, which may require corrective action by the Contractor.

2.4 QUALITY CONTROL ORGANIZATION

2.4.1 General

The requirements for the CQC organization are a CQC System Manager and sufficient number of additional qualified personnel to ensure contract compliance. The Contractor shall provide a CQC organization which shall be at the site at all times during progress of the work and with complete authority to take any action necessary to ensure compliance with the contract. All CQC staff members shall be subject to acceptance by the Contracting Officer.

2.4.2 CQC System Manager

The Contractor shall identify as CQC System Manager an individual within the onsite work organization who shall be responsible for overall management of CQC and have the authority to act in all CQC matters for the Contractor. The CQC System Manager shall be a graduate engineer or a graduate of construction management, with a minimum of 10 years construction experience on construction similar to this contract or a construction person with a minimum of 5 years in related work. This CQC System Manager shall be on the site at all times during construction and shall be employed by the prime Contractor. The CQC System Manager shall be assigned no other duties. An alternate for the CQC System Manager shall be identified in the plan to serve in the event of the System Manager's absence. The requirements for the alternate shall be the same as for the designated CQC System Manager.

2.4.3 CQC Personnel

In addition to CQC personnel specified elsewhere in the contract, the Contractor shall provide as part of the CQC organization specialized personnel to assist the CQC System Manager for the following areas: electrical, mechanical. These individuals may be employees of the prime or subcontractor; be responsible to the CQC System Manager; be physically present at the construction site during work on their areas of responsibility; have the necessary education and/or experience in accordance with the experience matrix listed herein. These individuals may perform other duties but must be allowed sufficient time to perform their assigned quality control duties as described in the Quality Control Plan

Experience Matrix

Area	Qualifications
a. Mechanical	Graduate Mechanical Engineer with 2 yrs experience or person with 5 yrs related experience

b.	Electrical	Graduate Electrical Engineer with 2 yrs related experience or person with 5 yrs related experience

Personnel identified in the technical provisions as requiring specialized skills to assure the required work is being performed properly will also be included as part of the CQC organization.

Masonry quality control inspector

In addition to the specification section 04200 - special inspection

A qualified masonry quality control inspector, approved by the Contracting Officer, shall perform quality control daily inspections of all the masonry work in progress. The minimum qualifications for the masonry QC inspector shall be as specified and a resume must be submitted for approval.

The masonry QC inspector shall control all masonry work including, but not limited to, the following:

Assure the preparation and QC approval of the specified detailed masonry shop drawing for all masonry walls prior to submitting the shop drawing to the government for approval prior to the start of any masonry work

Perform daily detailed inspections for all masonry work in progress, with special emphasis on the reinforcement CMU (grout filled) walls

Assure the control testing of the reinforced CMU walls (utilizing the infrared testing methods) at least monthly to control the installation of the reinforcing and grout filling for CMU walls. The results of the infrared testing shall be submitted to the government for approval

Control the masonry jointing -tooling shall be performed when the joint is thumbprint hard-by a masonry tooling specialist –resulting in the specified jointing at the proper time.

Control the daily cleaning of all walls as specified

2.4.4 Additional Requirement

In addition to the above experience and education requirements the CQC System Manager and staff shall have completed the course entitled "Construction Quality Management for Contractors." This course is offered on a quarterly basis within the Savannah District boundaries. CQC system Managers and staff who have not successfully completed this course must attend the next available training session. Failure to successfully complete this training within the next available training date will be grounds for removal as CQC System Manager.

2.4.5 Organizational Changes

The Contractor shall maintain the CQC staff at full strength at all times and be physically present at the construction site within 30 days after

notice to proceed. When it is necessary to make changes to the CQC staff, the Contractor shall revise the CQC Plan to reflect the changes and submit the changes to the Contracting Officer for acceptance.

2.5 SUBMITTALS

Submittals shall be made as specified in Section 01330 SUBMITTAL PROCEDURES. The CQC organization shall be responsible for certifying that all submittals are in compliance with the contract requirements.

2.6 CONTROL

Contractor Quality Control is the means by which the Contractor ensures that the construction, to include that of subcontractors and suppliers, complies with the requirements of the contract. At least three phases of control shall be conducted by the CQC System Manager for each definable feature of work as follows:

2.6.1 Preparatory Phase

The Government shall be notified at least 48 hours in advance of beginning the preparatory control phase.

This phase shall include a meeting conducted by the CQC System Manager and attended by the superintendent, other CQC personnel (as applicable), and the foreman responsible for the definable feature and prior to beginning work on each definable feature of work, after all required plans/documents/materials are approved/accepted, and after copies are at the work site. This phase shall include:

a. A review of each paragraph of applicable specifications.

b. A review of the applicable contract drawings and details.

c. A check to assure that all materials and/or equipment have been tested, submitted, and approved.

d. Review of provisions that have been made to provide required control inspection and testing.

e. Examination of the work area to assure that all required preliminary work has been completed and is in compliance with the contract.

f. A physical examination of required materials, equipment, and sample work to assure that they are on hand, conform to approved shop drawings or submitted data, and are properly stored.

g. A review of the--CQC prepared-- appropriate activity hazard analysis to assure safety requirements is met.

h. Discussion of procedures for controlling quality of the work including repetitive deficiencies. Document construction tolerances and workmanship standards for that feature of work.

i. A check to ensure that the prior portion of the necessary to allow the work to be performed has been accepted by the Contracting Officer.

j. Discussion of the initial control phase.

k. The results of the preparatory phase actions shall be documented by separate minutes prepared by the CQC System Manager and attached to the daily CQC report.

l. The Contractor shall instruct applicable subcontractor workers as to the acceptable level of workmanship required in order to meet contract specifications.

2.6.2 Initial Phase

This phase shall be accomplished after a complete sample of the work for a definable feature of work is in progress or completed—as applicable. The following shall be accomplished:

The Government shall be notified at least 24 hours in advance of beginning the initial phase.

a. A check of work to ensure that it is in full compliance with technical contract requirements. Review minutes of the preparatory meeting.

b. Verify adequacy of controls to ensure full contract compliance. Verify required control inspection and testing.

c. Establish level of workmanship and verify that it meets minimum acceptable workmanship standards. This initial sample of the work shall serve as the sample for the remainder of the work –upon acceptance by the Government.

d. Compare with required sample panels--- as appropriate.

d. Resolve all differences.

e. Check safety to include compliance with and upgrading of the safety plan and activity hazard analysis.

f. Review the activity analysis with each worker.

f. Separate minutes of this phase shall be prepared by the CQC System Manager and attached to the daily CQC report. Exact location of initial phase shall be indicated for future reference and comparison with follow-up phases.

g. The initial phase should be repeated for each new crew to work onsite, or any time acceptable specified quality standards are not being met.

2.6.3 Follow-up Phase

Daily checks shall be performed to assure control activities, including control testing, are providing continued compliance with contract

requirements and the acceptable sample of work established during the initial inspection, until all work is completed for this particular feature of work.

The checks shall be made a matter of record in the CQC documentation. Final follow-up checks shall be conducted and all deficiencies corrected prior to the start of additional features of work, which may be affected by the deficient work.

The Contractor shall not build upon nor conceal non-conforming work.

2.6.4 Additional Preparatory and Initial Phases

Additional preparatory and initial phases shall be conducted on the same definable features of work if the quality of on-going work is unacceptable, if there are changes in the applicable CQC staff, onsite production supervision or work crew, if work on a definable feature is resumed after a substantial period of inactivity, or if other problems develop.

2.7 TESTS

2.7.1 Testing Procedure

The Contractor shall perform specified or required tests to verify that control measures are adequate to provide a product, which conforms to contract requirements.

Upon request, the Contractor shall furnish to the Government duplicate samples of test specimens for possible testing by the Government.

Testing includes operation and/or acceptance tests when specified. The Contractor shall procure the services of a Corps of Engineers approved testing laboratory or establish an approved testing laboratory at the project site. The Contractor shall perform the following activities and record and provide the following data:

a. Verify that testing procedures comply with contract requirements.

b. Verify that facilities and testing equipment are available and comply with testing standards.

c. Check test instrument calibration data against certified standards.

d. Verify that recording forms and test identification control number system, including all of the test documentation requirements, have been prepared.

e. Results of all tests taken, both passing and failing tests, shall be recorded on the CQC report for the date taken. Specification paragraph reference, location where tests were taken, and the sequential control number identifying the test shall be given. If approved by the Contracting Officer, actual test reports may be submitted later with a reference to the test number and date taken. An information copy of tests performed by an offsite or commercial test facility shall be provided directly to the Contracting Officer. Failure to submit timely test reports as stated may

result in nonpayment for related work performed and disapproval of the test facility for this contract.

2.7.2 Testing Laboratories

2.7.2.1 Capability Check

The Government reserves the right to check laboratory equipment in the proposed laboratory for compliance with the standards set forth in the contract specifications and to check the laboratory technician's testing procedures and techniques. Laboratories utilized for testing soils, concrete, asphalt, and steel shall meet criteria detailed in ASTM D 3740 and ASTM E 329.

2.7.2.2 Capability Recheck

If the selected laboratory fails the capability check, the Contractor will be assessed a charge (as appropriate determined by Contracting Officer) to reimburse the Government for each succeeding recheck of the laboratory or the checking of a subsequently selected laboratory. Such costs will be deducted from the contract amount due the Contractor.

2.7.3 Onsite Laboratory

The Government reserves the right to utilize the Contractor's control testing laboratory and equipment to make assurance tests and to check the Contractor's testing procedures, techniques, and test results at no additional cost to the Government.

2.7.4 Furnishing or Transportation of Samples for Testing

Costs incidental to the transportation of samples or materials shall be borne by the Contractor. Samples of materials for test verification and acceptance testing by the Government shall be delivered to the Corps of Engineers Division Laboratory, f.o.b., at the following address:

For delivery by mail:
P.O. Box 51
Marietta, GA 30061

For other deliveries:
611 Cobb Drive
Marietta, GA 30060-3112

Coordination for each specific test, exact delivery location, and dates will be made through the Area Office.

2.8 COMPLETION INSPECTION

2.8.1 CQC Completion Inspection of entire project

Near the completion of all work, (when the project is substantially completed), or any increment thereof established by a completion time stated in the Special Clause entitled "Commencement, Prosecution, and Completion of Work," or stated elsewhere in the specifications, the CQC System Manager and staff shall conduct a detailed-comprehensive inspection of the entire project and develop a list of deficiencies, items which are not totally

completed or do not conform to the approved drawings and specifications and any items remaining of the CQC deficiency tracking list.

Such a list of deficiencies shall be included in the CQC documentation, as required by paragraph DOCUMENTATION below, and shall include the estimated date by which the deficiencies will be corrected.

The CQC System Manager and staff shall make a second follow-up inspection to ascertain that all deficiencies have been corrected. Once this is accomplished, the Contractor shall notify the Government that the CQC completion inspection punchlist has been completed.

2.8.2 Pre-Final Inspection

Notice shall be given to the Contracting Officer on the completion of the CQC inspection punchlist at least 14 days prior to completion to allow the scheduling of the prefinal inspection.

The Government will perform a verification inspection to assure that the facility is complete and ready for the prefinal inspection.

All mechanical and electrical systems must be completed and the contractor has performed the Government witnessed acceptance testing prior to the scheduling the prefinal inspection.

The Contractor's Quality Control Inspection personnel, plus the superintendent or other primary management person, and the Contracting Officer's Representative shall be in attendance at this inspection. Additional Government personnel including, but not limited to, those from Base/Post Civil Facility Engineer user groups, and major commands may also be in attendance.

A Government Prefinal Punch List will be developed as a result of this inspection.

The Contractor's CQC System Manager shall ensure that all items on this Government prefinal punchlist have been corrected before notifying the Government that a Final inspection with the customer should be scheduled.

Any items noted on the Pre-Final inspection shall be corrected in a timely manner and the contractor provide the contracting officer a schedule for completion of each item noted on the prefinal punchlist.

These inspections and any deficiency corrections required by this paragraph shall be accomplished within the time slated for completion of the entire work or any particular increment thereof if the project is divided into increments by separate completion dates.

2.8.3 Final Acceptance Inspection

The Contractor's Quality Control Inspection personnel, plus the superintendent or other primary management person, and the Contracting Officer's Representative shall be in attendance at this inspection. Additional Government personnel including, but not limited to, those from Base/Post Civil Facility Engineer user groups, and major commands may also be in attendance.

The final acceptance inspection will be formally scheduled by the Contracting Officer based upon results of the Pre-Final inspection.

Notice shall be given to the Contracting Officer of the completion of the prefinal punchlist at least 14 days prior to completion to allow the final acceptance inspection to be scheduled. This notification shall include the Contractor's assurance that all specific items previously identified to the Contractor as being unacceptable, along with all remaining work performed under the contract, will be complete and acceptable by the date scheduled for the final acceptance inspection.

Failure of the Contractor to have all contract work acceptably complete for this inspection may be cause for the Contracting Officer to bill the Contractor for the Government's additional inspection cost in accordance with the contract clause titled "Inspection of Construction".

2.9 DOCUMENTATION

The Contractor shall maintain current records providing factual evidence that required quality control activities and/or tests have been performed. These records shall include the work of subcontractors and suppliers and shall be on an acceptable form that includes, as a minimum, the following information:

a. Contractor/subcontractor and their area of responsibility.

b. Operating plant/equipment with hours worked, idle, or down for repair.

c. Work performed each day, giving location, description, and by whom. When Network Analysis (NAS) is used, identify each phase of work performed each day by NAS activity number.

d. Test and/or control activities performed with results and references to specifications/drawings requirements. The control phase should be identified (Preparatory, Initial, Follow-up). List deficiencies noted along with corrective action.

e. Quantity of materials received at the site with statement as to acceptability, storage, and reference to specifications/drawings requirements.

f. Submittals reviewed, with contract reference, by whom, and action taken.

g. Off-site surveillance activities, including actions taken.

h. Job safety evaluations stating what was checked, results, and instructions or corrective actions.

i. Instructions given/received and conflicts in plans and/or specifications.

j. Contractor's verification statement.

These records shall indicate a description of trades working on the project; the number of personnel working; weather conditions encountered; and any

delays encountered. These records shall cover both conforming and deficient features and shall include a statement that equipment and materials incorporated in the work and workmanship comply with the contract. The original and one copy of these records in report form shall be furnished to the Government daily within 24 hours after the date covered by the report, except that reports need not be submitted for days on which no work is performed. As a minimum, one report shall be prepared and submitted for every 7 days of no work and on the last day of a no work period. All calendar days shall be accounted for throughout the life of the contract. The first report following a day of no work shall be for that day only. Reports shall be signed and dated by the CQC System Manager. The report from the CQC System Manager shall include copies of test reports and copies of reports prepared by all subordinate quality control personnel.

2.10 SAMPLE FORMS

Sample forms enclosed at the end of Section 00800.

2.11 NOTIFICATION OF NONCOMPLIANCE

The Contracting Officer will notify the Contractor of any detected noncompliance with the foregoing requirements.

The Contractor shall take immediate corrective action after receipt of such notice.

Such notice, when delivered to the Contractor at the work site, shall be deemed sufficient for the purpose of notification.

If the Contractor fails or refuses to comply promptly, the Contracting Officer may issue an order stopping all or part of the work until satisfactory corrective action has been taken. No part of the time lost due to such stop orders shall be made the subject of claim for extension of time or for excess costs or damages by the Contractor.

--End of Section--

SECTION 01500

TEMPORARY CONSTRUCTION FACILITIES—MISCELLANEOUS ITEMS

TABLE OF CONTENTS

1.1 GENERAL REQUIREMENTS
1.1.1 Site Plan
1.1.2 Excavation Permits
1.1.3 Identification of Employees
1.1.3 Employee Parking
1.2 AVAILABILITY AND USE OF UTILITY SERVICES
1.2.1 Payment for Utility Services
1.2.2 Meters and Temporary Connections
1.2.3 Advance Deposit
1.2.4 Final Meter Reading
1.2.5 Sanitation
1.2.6 Telephone
1.3 BULLETIN BOARD, PROJECT SIGN, AND PROJECT SAFETY SIGN
1.3.1 Bulletin Board
1.3.2 Project Signs
1.4 PROTECTION AND MAINTENANCE OF TRAFFIC
1.4.1 Haul Roads
1.4.2 Barricades
1.5 CONTRACTOR'S TEMPORARY FACILITIES
1.5.1 Administrative Field Office
1.5.2 Storage Area
1.5.3 Supplemental Storage Area
1.5.4 Appearance of Trailers
1.5.5 Maintenance of Storage Area
1.5.6 Project Engineer office ---onsite (as applicable)
1.5.7 Security Provisions
1.5.8 Utilities
1.6 PLANT COMMUNICATION
1.7 TEMPORARY PROJECT SAFETY FENCING
1.8 PARTNERING
1.9 INITIAL MEETING WITH THE CONTRACTOR - MODIFICATION MARKUPS
1.10 INSTALLATION REGULATIONS
1.11 TESTING LABORATORIES
1.11.1 Approved Testing Laboratories
1.1 1.2 Other Laboratory Services
1.12 CONTAMINATION
1.12.1 Site Evaluation
1.12.2 Contractual Responsibilities of All Parties in the Event of Encounter with Contamination
1.13 CONSTRUCTION SCHEDULE RESTRAINTS - FORT STEWART, GA
1.13.1 Occupancy
1.13.2 Protection
1.13.3 Phasing and Sequence
1.13.3.1 GENERAL
1.13.3.2 Special Phasing and Coordination Restraints
1.13.4 Time of Performance
1.13.4.1 Access to Buildings
1.13.4.2 Work Requiring Outages
1.13.5 Outages
1.13.6 Continuity

1.13.7 Road and /or Railroad Closures
1.13.8 Entry
1.13.9 Fire Zone
1.13.10 Excavated Debris
1.14 REQUEST FOR INFORMATION (RFI) SYSTEM
1.15 RED ZONE Meeting
1.16 PROGRESS PHOTOGRANPS
1.17 AS-BUILT DRAWING AND SPECIFICATIONS MANAGEMENT
1.18 SCAFFOLD TAGGING SYSTEM
1.19 SHOP DRAWINGS FOR MECHANICAL AND ELECTRICAL MATERIAL AND EQUIPMENT INSTALLATION SPACES
1.20 MASONRY SHOP DRAWINGS
1.21 CLEANUP
1.22 LAYOUT OF FACILITIES AND BUILDINGS
1.23 RESTORATAION OF STORAGE AREA
1.24 REFERENCED STANDARDS (IN TECHNICAL SPECIFICATION SECTION)
1.25 ACCIDENT PREVENTION PLAN

1.1 GENERAL REQUIREMENTS

1.1.1 Site Plan

The Contractor shall prepare a site mobilization plan indicating the proposed location and dimensions of any area to be fenced and used by the Contractor, the location of the project sign, the number of trailers to be used, avenues of ingress/egress to the fenced area and details of the fence installation and submit the plan to the contracting officer for approval- prior to mobilization on the site.
Any areas which may have to be graveled to prevent the tracking of mud shall also be identified. The Contractor shall also indicate if the use of a supplemental or other staging area is desired.

1.1.2 Excavation (digging) and HOT (burning) Permits

Excavation and HOT (burning) permits will require 10 working days advance written notice (to QAR) and will be subject to the Contracting Officer's approval. Notice shall be accompanied with specific date and duration (start time / finish time) and a sketch showing the location of the proposed excavation or burning (torch, welding, etc).

Hot (burning) permits see section 01351 Safety and Health

1.1.3 Identification of Employees

All personnel shall have badges and vehicle passes or decals to enter the installation. Badges will be required to be worn at all times while on the installation. Decals will be required to enter the installation or the driver will be required to go to the MP station for a permit which will require driver license, proof of insurance, contract number, and point of contact for company before being allowed to enter.

This military installation requires the following information to remain on file throughout the life of this contract. Provide the following information to the Contracting Officer at the Pre-work and/or Pre-Construction meeting.

Contract No.
Contractor Name
Contractor Mailing Address
POC for Contractor (Name) and Phone No.
POC for Contract (COE or Installation) and Phone No.
Installation that contractor needs access; i.e. Hunter or Stewart

This requirement applies to Construction Firms, Design AE firms, Consultants and Studies firms. Prescribed identification shall immediately be delivered to the Contracting Officer for cancellation upon release of any employee.

Procedure for obtaining Vehicle Registration ---ID badges for contractors {working on USACE contracts at Ft Stewart and HAAF}

Reference
3d ID (M) FSGA/ HAAF –Vehicle Pre-Registration Packet for Contractors—dated 13 Jun 01

The procedure/ Process should be as follows for employee ID cards (FOR CONTRACTORS WORKING ON FT STEWART AND HAAF CONTRACTS):

-The Contractor must provide the specified information to the Resident Engineer at the Preconstruction Conference
Contract No------Contractor Name---Contractor Mailing Address---POC for the contractor (Name and Phone #)---POC for Contract (Corps of Engrs) and Phone #)

- The contractor (President or Principle) must prepare a letter to HQ, 3d Inf Div (Mech) and Ft Stewart ---Director of Contracting---Attn: Bernice Harper—1042 William H Wilson Ave Ste 219—Ft Stewart, Ga. 31314-3324

  The letter must include the information and data as indicated in the sample letter included in the referenced "Vehicle pre-registration packet for contractors"---enclosures must include Personnel Roster---Cover Page of Contract issued by Corps of Engineers –Contracting Officer

- The contractor must also prepare a second letter to HQ, 3d Inf Div (Mech) and Ft Stewart—Civilian Personnel Advisory Center—Attn: Karen Bandera—101 W Bultman Ave Ste 100—Ft Stewart, Ga.

  This letter must include the information and data as indicated in the sample letter included in the referenced "Vehicle pre-registration packet for contractors"----enclosures must include Employee Information for Contractor personnel ---Contract # {for each employee requiring access to the installation}

  Full Name-----SS #----Date of Birth----Weight----Height----Color of Hair----Color Eyes---Sex---Identified as Recovery Pesonnel (yes /no)

:
The contractor sends a list of their personnel to the DOC (by letter) so that they can verify that the contractor has a contract on post and for how long...

The information is sent to CPAC from DOC and accompanied by the contractor's second letter ------- the ID cards are prepared by CPAC for each individual employee.

CPAC suggests that 4 or 5 people in groups---- every couple of hours...at that rate, we would get about 20 people done per day...

These are the POC at this time.
May Riggins is filling in for Sandy Sanders at the DOC and is verifying the contractors (767-6781).
Carolyn Colin works for CPAC and is the contact for the IDs (767-4346) and Karen Bandera is her director (767-8358).

At this point, the actual individual has to pick up the ID and get his picture and fingerprint put on it at Ft Stewart, Ga.

According to Lenell at DOC, once they have their card from CPAC, they proceed to the welcome center to get the photo and the finger print at Ft Stewart, Ga.

Vehicle Registration procedure/ process for Ft Stewart and HAAF contractors

The individual employee must procedure to the vehicle registration building with written certification for the contractor ----which the individual is an employee of the contractor and the vehicle registration is requested.

Ft Stewart------building 285

HAAF ---building 1240

Data needed for vehicle registration

Drivers license---Proof of Insurance-----Vehicle Registration (State)—Special power of Attorney—(if you wish to register a vehicle and your name does not appear on the vehicle state registration)

This action completes the vehicle registration and employee ID for access to the installation

1.1.3 Employee Parking

Contractor employees shall park privately owned vehicles in an area designated by the Contracting Officer. This area will be within the area construction limits. Contractor employee parking shall not interfere with existing and established parking requirements of the military installation.

1.2 AVAILABILITY AND USE OF UTILITY SERVICES

1.2.1 Payment for Utility Services

The Government will make all reasonably required utilities available to the Contractor from existing outlets and supplies, as specified in the contract. Unless otherwise provided in the contract, the amount of each utility service consumed shall be charged to or paid for by the Contractor at prevailing rates charged to the Government or, where the utility is produced by the Government, at reasonable rates determined by the Contracting Officer. The Contractor shall carefully conserve any utilities furnished without charge.

1.2.2 Meters and Temporary Connections

The Contractor, at its expense and in a manner satisfactory to the Contracting Officer, shall provide and maintain necessary temporary connections, distribution lines, meters and meter bases required to measure the amount of each utility used for the purpose of determining charges. The Contractor shall submit its proposed temporary power installation including tie-in to the contracting officer for review prior to installation. The Contractor shall notify the Contracting Officer, in writing, 5 working days before final electrical connection is desired so that a utilities contract can be established.

The contractor shall perform a weekly electrical inspection by a qualified electrician, for all temporary electrical service and provide a report to the contracting officer.

1.2.3 Advance Deposit

An advance deposit for utilities consisting of an estimated month's usage or a minimum of $50.00 will be required. The last monthly bills for the fiscal year will normally be offset by the deposit and adjustments will be billed or returned as appropriate. Services to be rendered for the next fiscal year, beginning 1 October, will require a new deposit. Notification of the due date for this deposit will be mailed to the Contractor prior to the end of the current fiscal year.

1.2.4 Final Meter Reading

Before completion of the work and final acceptance of the work by the Government, the Contractor shall notify the Contracting Officer, in writing, 5 working days before termination is desired. The Government will take a final meter reading. The Contractor shall then remove all the temporary distribution lines, meter and meter bases, and associated paraphernalia. The Contractor shall pay all outstanding utility bills before final acceptance of the work by the Government.

The amount of electric power consumed by the contractor after permanent power connection (for contractor use in testing, heating/cooling and lighting) shall be estimated by the government and contractor will be advised of the estimated kwh consumed monthly until acceptance of the facility.

1.2.5 Sanitation

The Contractor shall provide and maintain within the construction area minimum field-type sanitary facilities approved by the Contracting Officer. Government toilet facilities will not be available to Contractor's personnel.

1.2.6 Telephone

The Contractor shall make arrangements and pay all costs for telephone facilities desired with off post providers.

1.3 BULLETIN BOARD, PROJECT SIGN, AND PROJECT SAFETY SIGN

1.3.1 Bulletin Board

Immediately upon beginning of work, the Contractor shall provide a weatherproof glass-covered bulletin board not less than 36 by 48 inches in size for displaying the Equal Employment Opportunity poster, a copy of the wage decision contained in the contract, Wage Rate Information poster, and other information approved by the Contracting Officer. The bulletin board shall be located at the project site in a conspicuous place easily accessible to all employees, as approved by the Contracting Officer. Legible copies of the aforementioned data shall be displayed until work is completed. Upon completion of work the bulletin board shall be removed by and remain the property of the Contractor.

1.3.2 Project Signs

The Contractor shall furnish and install a project sign at the location selected by the Contracting Officer. The wording on the project sign must be approved by the contracting officer. The project sign shall be painted on 1/2 inch thick exterior grade plywood. The sign layout shall be in accordance with the graphic format shown in Attachment 1 to Section 00800. The 4' by 4' right-hand section shall be painted white (Color No. 37875, Fed. Std. 595a) with black (Color No. 37038, Fed. Std. 595a) lettering. The 2' by 4' left-hand section shall be painted red (Color No. 12199, Fed. Std. 595a) with white lettering. Eight additional signs of similar construction and finish shall be furnished and installed at locations selected by the Contracting Officer. These signs shall be 36 inches wide, 15 inches high, with red letters 2 inches high on a white background and shall read as follows:

"OFF LIMITS TO UNAUTHORIZED PERSONNEL"

1.4 PROTECTION AND MAINTENANCE OF TRAFFIC

During construction the Contractor shall provide access and temporary relocated roads as necessary to maintain traffic. The Contractor shall maintain and protect traffic on all affected roads during the construction period except as otherwise specifically directed by the Contracting Officer. Measures for the protection and diversion of traffic, including the provision of watchmen and flagmen, erection of barricades, placing of lights around and in front of equipment and the work, and the erection and maintenance of adequate warning, danger, and direction signs, shall be as required by the State and local authorities having jurisdiction. The traveling public shall be protected from damage to person and property. The Contractor's traffic on roads selected for hauling material to and from the site shall interfere as little as possible with public traffic. The Contractor shall investigate the adequacy of existing roads and the allowable load limit on these roads.

The Contractor shall be responsible for the repair of any damage to roads caused by construction operations.

1.4.1 Haul Roads

The Contractor will be required to use the haul routes shown on the plans unless otherwise permitted in writing by the Contracting Officer. When haul routes are not designated on the plans, the Contractor must obtain approval of the Contracting Officer of haul routes he intends to use. The Contractor shall maintain the haul routes and shall keep the dust problem under control by wetting the surface as needed. Sweeping and cleaning of pavements will be done as necessary to remove spillage resulting from the hauling operations. After all hauling has been completed; the Contractor shall restore the earth areas used for the haul routes to original condition by final grading, shaping, compacting, and grassing, and shall clean and sweep all paved areas as required. Any pavement damaged as a result of hauling operations under this contract for both the earth and the Contractor, as approved by the Contracting Officer, shall promptly repair other materials. The cost of maintenance and repair of the haul routes, as mentioned above, shall be considered as a subsidiary obligation of the Contractor. The axle load of earth hauling equipment operating on paved streets shall not exceed 12,000 pounds.

1.4.2 Barricades

The Contractor shall erect and maintain temporary barricades to limit public access to hazardous areas. Such barricades shall be required whenever safe public access to paved areas such as roads, parking areas or sidewalks is prevented by construction activities or as otherwise necessary to ensure the safety of both pedestrian and vehicular traffic. Barricades shall be securely placed, clearly visible with adequate illumination to provide sufficient visual warning of the hazard during both day and night.

1.5 CONTRACTOR'S TEMPORARY FACILITIES

1.5.1 Administrative Field Offices

The Contractor shall provide and maintain administrative field office facilities within the construction limits at the project site. Government office and warehouse facilities will not be available to the Contractor's personnel.

1.5.2 Storage Area

The Contractor shall construct a temporary 6-foot high chain link fence around trailers and materials. The fence shall include plastic strip inserts, colored brown, so that visibility through the fence is obstructed. Fence posts may be driven, in lieu of concrete bases, where soil conditions permit. Trailers, materials, or equipment shall not be placed or stored outside the fenced area unless such trailers, materials, or equipment are assigned a separate and distinct storage area by the Contracting Officer away from the vicinity of the construction site but within the military boundaries. Trailers, equipment, or materials shall not be open to public view with the exception of those items that are in support of ongoing work on any given day. Materials shall not be stockpiled outside the fence in preparation for the next day's work. Mobile equipment, such as tractors, wheeled lifting equipment, cranes, trucks, and like equipment, shall be parked within the fenced area at the end of each workday.

1.5.3 Supplemental Storage Area

Upon Contractor's request, the Contracting Officer will designate another or supplemental area (if available) for the Contractor's use and storage of trailers, equipment, and materials. This area may not be in close proximity of the construction site but shall be within the military boundaries. Fencing of materials or equipment will be required at this site; and the Contractor shall be responsible for cleanliness and orderliness of the area used and for the security of any material or equipment stored in this area. The Government will not provide utilities to this area.

1.5.4 Appearance of Trailers

Trailers utilized by the Contractor for administrative or material storage purposes shall present a clean and neat exterior appearance and shall be in a state of good repair. Trailers that, in the opinion of the Contracting Officer, require exterior painting or maintenance will not be allowed on the military property.

1.5.5 Maintenance of Storage Area

Fencing shall be kept in a state of good repair and proper alignment. Should the Contractor elect to traverse, with construction equipment or other vehicles, grassed or unpaved areas which are not established roadways, such areas shall be covered with a layer of gravel as necessary to prevent rutting and the tracking of mud onto paved or established roadways; gravel gradation shall be at the Contractor's discretion. Grass located within the boundaries of the construction site shall be mowed for the duration of the project. Grass and vegetation along fences, buildings, under trailers, and in areas not accessible to mowers shall be edged or trimmed neatly.

1.5.7 Security Provisions

Adequate outside security lighting shall be provided at the Contractor's temporary facilities.
The Contractor shall be responsible for the security of its own equipment; in addition, the Contractor shall notify the appropriate law enforcement agency requesting periodic security checks of the temporary project field office.

1.5.8 Utilities

All utilities will be metered and paid for by contractor.

Rates to Charge Contractor: Water: $.94 per 1000 Gallons
Electricity: $.0583 per KWH
Sewer: $1.08 per 1000 gallons

1.6 PLANT COMMUNICATION

Whenever the Contractor has the individual elements of its plant so located that operation by normal voice between these elements is not satisfactory, the Contractor shall install a satisfactory means of communication, such as telephone or other suitable devices. The devices shall be made available for use by Government personnel.

1.7 TEMPORARY PROJECT SAFETY FENCING

As soon as practicable, but not later than 15 days after the date established for commencement of work, the Contractor shall furnish and erect temporary project safety fencing at the work site. The safety fencing shall be a high visibility orange colored, high density polyethylene grid or approved equal, a minimum of 42 inches high, supported and tightly secured to steel posts located on maximum 10 foot centers, constructed at the approved location. The safety fencing shall be maintained by the Contractor during the life of the contract and, upon completion and acceptance of the work, shall become the property of the Contractor and shall be removed from the work site.

1.8 PARTNERING

Within 60 calendar days after NTP, the Government intends to propose a partnering relationship with the Contractor. This partnering relationship will attempt to draw on strengths of each organization to facilitate communications and minimize delays to achieve a safe contract resulting a quality product, within budget, and on schedule. Participation in such partnering activities may include the initial/follow-up partnering workshops and attendance at weekly coordination meetings with the Government and cooperation in other efforts to promote the partnering relationship. The Government and the Contractor will equally share the total cost for the initial/follow-up partnering workshops and the entire partnering relationship. Participation in partnering will not result in any change in the terms or price of the contract.

1.9 INITIAL MEETING WITH THE CONTRACTOR –MODIFICATION MARKUPS

1. Initial meeting with contractor Not later than 60 days after NTP and prior to the first modification on the contract –see guidance for details

The Project Engineer must arrange a meeting with the contractor and major sub-contractor's home-office project manager/ representative to determine the allowable contractor's G&A percentage –{for the next 6-month period of the contract}----bond premium rate-----labor burden for all crafts anticipated on the jobsite to be used for construction modifications

A follow-up meeting to verify the data-----must be held every 6 months ----

The contractor must provide his detailed breakdown of G&A costs---these costs must be in accordance with the costs elements that are allowable in FAR
The contractor may provide a recent (within last 6 months)–company audit with his breakdown of cost elements.

INITIAL MEETING WITH THE CONTRACTOR TO ESTABLISH MARK-UPS FOR MODIFICATIONS

Contractor home-office general and administrative costs –field overhead --- labor burden rate---bond cost
{Indirect costs----applicable to construction modifications mark-up}

All construction modifications will include indirect costs mark-ups for contractor's home office general and administrative costs and additional bond premium –(based on the increase in contract price)

INDIRECT COSTS –MARK-UPS

Indirect costs consist of Field and Home Office Overhead and Bond.

DEFINITIONS

General and Administrative Costs---Indirect overhead home-office costs for the contractor –including his cost of doing business----usually expressed as a %.

This G&A percentage is subject to change based on the home-office costs and/or the total earnings anticipated for the contractor (additional contract awards)

All allowable FAR home- office costs (total costs)
_____ = G&A %
Total cost to the contractor (all contracts)

HOME OFFICE OVERHEAD

Home Office Overhead or General and Administrative costs are costs that the Contractor must incur to support all their field construction projects. Home Office Overhead costs are usually expressed as a percentage of total direct costs for all contracts awarded to the contractor at the time of the calculation.

Types of services, which may be included in Home Office Overhead, include; Estimating, payroll and administrative costs, purchasing, Company Officer Salary, accounting, legal costs, warehousing, mechanics and other costs.

Shown below is a listing of some of the Home Office Overhead costs

Administrative Salaries
Officer's Salaries Accounting costs
Legal Costs ----------not allowable
Professional Services Engineering costs
Repairs and maintenance
Insurance
Vehicle costs Utilities
Computer costs
IT Professionals
Pension Plan costs
Depreciation
Office Expense
Entertainment ----------not allowable
Rent
Shop Supplies
Interest ----------not allowable

It should be noted that not all Home Office Overhead costs are allowable in the Federal Acquisition Regulations (FAR). The types of costs that are unallowable are shown in Part 31 of the FAR. Some examples of unallowable costs are; Interest expense, entertainment, legal expense involved in a claim against the Government, and bad debts.

Home office overhead costs are calculated as a percentage of total direct costs. The Contractor will present their total overhead costs in categories as shown above based upon financial audits. The costs are normally calculated

on a yearly basis since financial statements are done yearly. The overhead costs will then be divided by the total direct costs the Contractor incurred on all their jobs for that calendar year.

Determination of Home Office -G&A overhead is required for all major sub-contractors---

FIELD OFFICE OVERHEAD ---These costs consist of Contractor costs at the Job Site required to manage the construction work. The original contract should include all the field overhead costs needed for the original construction duration.

Examples of these costs are:

Superintendent Salary
Safety Engineer Salary
QC Manager Salary
Secretary Salary
Office Trailer Rent /Utilities
Office Equipment
Office Supplies
Portable Toilets
Water for Employees

The Contractor's field overhead costs generally will not increase unless the Contractor is delayed or the Contract time is extended.

DAILY FIELD OVERHEAD COST --- based on the amount of plant -equipment and personnel on jobsite at the time the modification is performed)

LABOR BURDEN RATE ---Direct cost mark-up on labor rates

Labor costs are comprised of hours worked and the type of labor or employee. Labor rates for various types of employees can be found in the front of all contracts under the Davis-Bacon wages section. This section lists base wage rates and fringes rates for all the categories of employees to be expected to work on the contract for the Contractors

The Contractor must also pay what we shall call "Labor Burden" or taxes and insurance on all labor costs. "Labor Burden" consists of costs such as Workmen's Compensation, Employer's Liability Costs, Unemployment Insurance and Social Security. "Labor Burden" can vary depending on the efficiency and safety record of the Contractor. The Contractor should submit a breakdown of the "Labor Burden" percentage in their proposal to justify the percentage proposed. Once the "Labor Burden" is known a new hourly rate can be

calculated incorporating the Base Labor rate, fringes and "Labor Burden" (See Form ENG 4715 for details).

Bond premium---The contractor will incur additional payment and performance bond premiums upon an increase in the contract price. This indirect cost should be applied at the same rate as the contractor's premium rate to the bonding company for the contract.
Customarily the bond premium is (0.50%-1.0 %)

Not later than 60 days after NTP and prior to the first modification on the contract

The Project Engineer must arrange a meeting with the contractor and major sub-contractor's home-office project manager/ representative to determine the allowable contractor's G&A percentage -{for the next 6-month period of the contract}----bond premium rate-----labor burden for all crafts anticipated on the jobsite to be used for construction modifications

A follow-up meeting to verify the data-----must be held every 6 months ----

The contractor must provide his detailed breakdown of G&A costs---these costs must be in accordance with the costs elements that are allowable in FAR

1.10 INSTALLATION REGULATIONS

The employees of the Contractor will be required to abide by all installation regulations as published by the Commanding Officer. A copy of these regulations can be obtained from the Area/Resident Engineer at the installation. All costs in connection therewith shall be included in the contract price for the work. All costs in connection therewith shall be included in the contract price for the work.

1.11 TESTING LABORATORIES

Testing is required by the Contractor as part of his Quality Control Plan to verify contract compliance. This Quality Control Testing is to be conducted by a project or commercial laboratory that has been found adequate and qualified by a Corps of Engineers Division Laboratory Inspection Team.

1.11.1 Approved Testing Laboratories

A composite listing of approved testing laboratories within the South Atlantic Division is available upon request. The Contractor should engage the services of a laboratory contained in the composite list. Contractors may obtain the list by calling (912) 652-5094 or (912) 652-5244. Fax requests can be made Doug Saxon (912) 652-6016.

1.11.2 Other Laboratory Services

The Contractor may engage the services of a laboratory other than those approved by Corps of Engineers Division Laboratory Inspection Team if they comply with the following:

a. The Contractor identifies and proposes the unapproved laboratory a minimum of 90 days prior to the start of testing. This time is necessary to allow for scheduling an inspection by a Corps of Engineers Division Laboratory team. The time for Government inspection will not be the basis for an increase in the contract performance period.

b. All costs of Government inspection shall be the responsibility of the Contractor.

c. The Contractor may request Government inspection and approval prior to award by forwarding a written request to:

US Army Engineer District, Savannah
Environmental and Materials Unit
ATTN: Mike Wielputz
200 North Cobb Parkway
Building 400, Suite 404
Marietta, GA 30062

1.12 CONTAMINATION

1.12.1 Site Evaluation

The job site has been evaluated for potential site contamination. See RFP Section 1020 and 1110 for more information.

1.12.2 Contractual Responsibilities of All Parties in the Event of Encounter with Contamination

If the Contractor encounters materials or conditions which indicate that there may be contamination on the site, the Contractor shall stop all work on the job site and report the discovery of the contaminants to the Contracting Officer's Representative (COR). The COR, will issue a written order to the Contractor to resume work or to suspend, delay, or interrupt all or any part of the work of this contract for the period of time that the Contracting Officer determines appropriate for the convenience of the Government as provided in FAR 52.212-12 - SUSPENSION OF WORK. The Government will be responsible for making an assessment of the contaminated site if this course of action is determined to be appropriate. After the assessment has been completed, the Government reserves the right to the following courses of action:

a. Direct the Contractor to resume work.

b. Clean up the contaminated site prior to directing the Contractor to resume work. The COR will determine whether the cleanup is to be accomplished by others or the Contractor.

c. Relocate the project site.

d. Terminate the contract for the convenience of the Government as provided in FAR 52.249-1 - TERMINATION FOR CONVENIENCE OF THE GOVERNMENT (FIXED-PRICE) (SHORT FORM) or FAR 52.249-2 - TERMINATION FOR CONVENIENCE OF THE GOVERNMENT (FIXED-PRICE) - ALTERNATE I as applicable.

1.13 CONSTRUCTION SCHEDULE RESTRAINTS - FORT STEWART, GA

1.13.1 Occupancy

All buildings listed to be demolished are fully occupied and will be occupied during construction (as noted in the sequence and phasing requirements -below). It is the intent of these provisions to provide for maximum coordination between construction activities pursuant to this contract and concurrent ongoing routine activities of base personnel. Interference with and inconvenience to the occupants or routine of the facility shall be held to an absolute minimum.

1.13.2 Protection

Contractor is responsible to provide such covering, shields and barricades as are required to protect building occupants, equipment, stores, supplies, etc., from dust, debris, weather intrusion, water, moisture or other cause of damage resulting from construction.

1.13.3 Phasing and Sequence

1.13.3.1 General

In addition to the submittals required by clause SCHEDULES FOR CONSTRUCTION CONTRACTS FAR 52.236-15) the Contractor shall submit for approval a summary work schedule setting forth schedule dates for initiation and completion of construction in each occupied work area. No work shall be performed prior to approval of this schedule and all work shall be performed in strict adherence thereto. If departures from this schedule appear to be required or desired, the Contracting Officer shall be promptly notified and his approval will be required prior to implementation of said departure(s).

1.13.3.2 Special Phasing and Coordination Restraints

The work under this Contract shall be performed as a continuous operation, requiring no special phasing or extraordinary cpprdination or sequencing.

1.13.4 Time of Performance

1.13.4.1 Access to Buildings

All work requiring access to occupied building interiors excluding attics, crawl spaces, etc., and all other work shall be performed between 7:30 a.m. and 4 p.m. (normal working hours for base where project is located) excluding official holidays, unless otherwise indicated or approved by the Contracting Officer. Requests to work during other than these normal hours shall be made in writing at least 36 hours in advance. For example, a request to work on a Saturday shall be submitted no later than Thursday at noon.

1.13.4.2 Work Requiring Outages

Work requiring outages of utilities or building systems will be accomplished during normal working hours in accordance with prior approved schedule(s).

1.13.5 Outages

Contractor's work requiring outages of utility systems or building systems will require 14 calendar days advance notice and will be subject to the approval of the Contracting Officer. Notice shall include type of outage, date, and time outage will commence and estimated duration of outage.

1.13.6 Continuity

All tools, labor and materials required to complete any item of work within a given work area or requiring an outage of any building utility or system, shall be available at the site prior to commencement thereof. Once work has commenced on an item of work, said work shall be continuously and diligently performed to completion and acceptance.

1.13.7 Road and/or Railroad Closures

Road and/or railroad closures will require 2 weeks' advance written notice and be subject to the Contracting Officer's approval. Notice shall state reason for closure; date and time closure will commence and estimated duration of closure. A sketch shall be provided showing location of excavated area and placement of barricades and signs. Closures shall be limited to a maximum of 5 calendar days.

1.13.8 Entry

Entry to all areas, except the cantonment area, to be coordinated with Range Control, Building 7901 (intersection of Georgia Highway 144 and Fort Stewart Road 47) and the Provost Marshal's office.

1.13.9 Fire Zone

The Contractor is required to provide 72-hour notice to the Contracting Officer prior to the final programming of the fire zone information at the main fire station.

1.13.10 Excavated Debris

All excavated debris will be hauled off post. No landfills are available on Fort Stewart.

1.14 REQUEST FOR INFORMATION (RFI) SYSTEM

The Government has developed an electronic database, the Request for Information (RFI) System, to track and answer Contractor questions and requests for information and clarification during construction. The use of the RFI System for all requests (the Contractor's as well as the subcontractors'/suppliers') is a contractual requirement for this project. The Contractor will enter the system over the Internet using any WEB browser and any Internet service provider. The Government will provide the

Contractor a user identification and password for the system that will only allow the Contractor to enter and view the requests for this project. The Contractor will provide the Government the E-mail address for the individual(s) inputting into the system in order that E-mail messages can be sent from the Government to the Contractor indicating a response to the request. The Government will provide training in the use of the software, which is a Lotus NOTES application. The Contractor will enter all requests indicating the question, recommended solution (if applicable), and needed response date. The Government will be notified through an E-mail message that the Contractor has entered a request into the system. When the Government has answered the request, an E-mail message will be sent to the Contractor, informing the Contractor that the answer to the request is in the system. The Contractor will enter the system to retrieve the answer using the same procedure to enter the question. The RFI System assigns a unique number to each request. The Contractor will not be reimbursed separately for the required use of this system. The Contractor shall include any costs associated with the use of this system into the appropriate bid item.

1.15 RED ZONE meeting

When the project facility is approximately 90 % complete or not less than 60 calendar days from ACO anticipated prefinal inspection date.

- o ACO, Project Engineer, PM/forward, DPW (POC for transfer/warranty) and other interested persons having action to result in a fully operational facility will meet with the Contractor –Supt., CQC, PM (home office) to develop a RED ZONE PLAN /schedule for completion

  - project completion
  - prefinal inspection
  - Use and possession prior to completion
  - final inspection
  - transfer/acceptance of the project
  - items due to the DPW at transfer
  - warranty plan with POC for implementation
  - develop a bar chart schedule for completion

PROJECT COMPLETION

- Coordination and interface with DPW—USER—FIRE MARSHALL

  - Coordinate the contractor's permanent tie-in for utilities with DPW—arrange for an outage (date-time-area to be affected)--------- - advise all personnel to be affected by the outage- (include duration of outage)

    - o Permanent power
    - o Chilled water
    - o Heating water
    - o Natural gas
    - o Domestic water (Does this include sprinkler/fire protection systems also?)

- o Sanitary sewer
- o EMCS

. Coordinate with DOIM for the installation of the telephone and data line service to the facility.

- o It may be advantageous for the DOIM to work
  - o With the contractor's work force
  - o Or after normal duty hours-weekends
  - o And prior to final ceiling installation

. Coordinate the transfer of payment for utilities from the contractor to DPW or User (as applicable)— final meter readings

. Coordinate with Fire Department (Ft Stewart - Hunter AAF)

- o Arrange an inspection of the entire fire protection and reporting system by the Fire Marshall
- o Coordinate the fire reporting system with Post system
- o Assure fire extinguishers are provided by the contractor or DPW
- o Coordinate for Fire Marshall –or representative to witness the QA/acceptance operational testing for all fire protection and reporting systems.

. Coordinate with User for the utility requirements of the final Equipment ---furniture for the facility (proper power/ voltage, accessibility, computers, Internet access/ telephone/cable, lighting, water supply, drains, natural gas, and etc.

- Not less than 30 work days prior to prefinal inspection---All testing of mechanical and electrical systems must be completely installed and ready for QC control testing (testing by CQC-subcontractor to assure the system is operational and to work out minor deficiencies)

- Not less than 15 work days prior to prefinal inspection---All mechanical and electrical systems must be ready for the QA/acceptance testing (testing performed by the contractor to demonstrate to QA/DPW - that the systems are operating properly- as designed)

- Not less than 10 work days prior to prefinal inspection–CQC must perform his completion inspection

of the entire project and prepare a detailed punchlist—*see spec section 01451-3.8.1 (the list must not exceed 50-100 minor items /deficiencies)* and submit list to PE with a schedule date for completion of each item.

Project Engineer, QA and (Resident Engineer-if available) will review the CQC punchlist and add items as needed---based on the QAR continuing deficiency-tracking list—throughout the contract period.

1.16 PROGRESS PHOTOGRAPHS- MONTHLY
*1

The Contractor shall, during the progress of the project, furnish the Contracting Officer progress digital photographs to depict progress of construction. ~~A qualified, established, commercial photographer shall perform the photographic work.~~ The photographs shall be taken between the 1st and 5th day of each month and be delivered to the Contracting Officer not later than the 20th day of the same month taken. The photographs shall be taken from not less than ten positions for each month as selected by the Contracting Officer. They shall show, inasmuch as practicable, work accomplished during the previous month. Each photograph shall be identified showing date made, contract title and number and a brief description of work depicted and shall be sequentially numbered. The identifying data shall be placed in the electronic file with the digital photos. No separate payment will be made for these services and all costs in connection therewith shall be considered incidental to costs of the overall project.

1.17 AS-BUILT DRAWING AND SPECIFICATIONS MANAGEMENT

As-built drawings / specification --the process for as-built drawing/ specifications management

a---the contractor must maintain -1 full size set of contract plans as an as-built

set and one set of specifications designated as as built specifications -------on the jobsite

b---the contractor QC and superintendent will indicate any and all changes during

construction on the set of as-built plans--QA must assure that this is being done at least monthly

c---immediately after the final /acceptance inspection --the contractor must

submit two (2) marked up full size as-built contract plans and 2 sets of marked up as built specifications -----to the field office for approval

d---one approved full size set of as built plans and one approved set of as built

specifications are forwarded to the DPW (by transmittal letter - receipt acknowledge -requested) for their use until the final as built in CADD format are completed

e--the contractor is required to prepare the final as built plans and specifications

in CADD format as specified in section 01780 within 30 cal days after final inspection/ acceptance of the facility upon receipt of the final CADD as built plans and specifications --the final CADD as builts must be verified as complete and approved ---this is now performed by the District --it requires Micro-station hardware for DGN format CADD

f--upon approval of the final CADD as built plans and specifications (the field office) --the CADD --CD in DGN format will be provided to the DPW (with receipt acknowledged requested transmittal letter)

1.18 SCAFFOLD TAGGING SYSTEM

The contractor's onsite representative, responsible for implementation of the accident prevention plan, must perform inspections and tagging for all scaffolds after erection and prior to each work shift prior to use. The contractor's representative must establish a detailed scaffolding checklist based on EM 385-1-1 and OSHA to result a tagging system (with initials on the tag) to indicate that the scaffold has been inspected and is safe for use. The tagging system should include a color tag -such as green for safe and red for unsafe. The tag should provide a space for the contractor's representative to sign -daily after his inspection of the scaffold for safe use prior to the start of each work shift.

Scaffolds without the proper tagging shall not be used.

1.19 SHOP DRAWINGS FOR MECHNICAL AND ELECTRICAL MATERIAL AND EQUIPMENT INSTALLATION SPACES

Detailed and comprehensive shop drawings (including comprehensive-coordinated shop drawings indicating all mechanical and electrical materials and equipment to be provided in the spaces) are required to be submitted for approval to the Contracting Officer, for <u>all spaces</u> where HVAC mechanical and electrical materials and equipment are installed. These spaces are, but not limited to, the following areas:

Above ceilings
Mechanical room areas
Plenum and chase areas
Electrical closets

Shop Drawings shall consist of plan view for equipment layout (for specific equipment to be provided) including assembly and installation

details and electrical connection diagrams; ductwork layout showing the location of all supports and hangers, typical hanger details, gauge reinforcement, reinforcement spacing rigidity classification, and static pressure and seal classifications; and piping layout showing the location of all guides and anchors, the load imposed on each support or anchor, and typical support details.

Shop Drawings shall include plan and all elevation views of all areas as required and approved by the Contracting Officer, to demonstrate that the entire mechanical and electrical systems including all ductwork and equipment has been coordinated with all other installation and trades and can be properly installed within the areas and all other systems maybe properly installed, including clearances required for operation and maintenance.

The shop drawing shall be submitted and approved a minimum of 30 days prior to scheduled date for installation of the mechanical and electrical material and equipment.

1.20 MASONRY SHOP DRAWINGS

The shop drawings for masonry work shall be submitted for government approval, and include shop drawings for all masonry walls on the contract. This requirement is in addition to the requirements in section 04200 SD-02 Shop Drawings.

NO MASONRY WORK SHALL BE STARTED PRIOR TO THE APPROVAL OF THE MASONRY SHOP DRAWINGS.

1.21 CLEANUP

Construction debris, waste materials, packaging material and the like shall be removed from the work site daily. Any dirt or mud that is tracked onto paved or surfaced roadways shall be cleaned away. Materials resulting from demolition activities that are salvageable shall be stored within the fenced area described above or at the supplemental storage area. Stored material not in trailers, whether new or salvaged, shall be neatly stacked when stored.

1.22 LAYOUT OF FACILITIES AND BUILDINGS

The Contractor shall lay out its work from Government established base lines and bench marks indicated on the drawings, and shall be responsible for all measurements in connection with the layout.

The contractor shall utilize the services of a registered professional surveyor to layout and locate the final location of all buildings and associated support facilities.

The contractor shall submit for approval a written and sealed surveyors plot, indicating the final locations.

1.23 RESTORATION OF STORAGE AREA

Upon completion of the project and after removal of trailers, materials, and equipment from within the fenced area, the fence shall be removed and will become the property of the Contractor. Areas used by the Contractor for the storage of equipment or material, or other use, shall be restored to the original or better condition. Gravel used to traverse grassed areas shall be removed and the area restored to its original condition, including topsoil and seeding as necessary.

1.24 REFERENCED STANDARDS (IN TECHNICAL SPECIFICATION SECTIONS)

The contractor (QC representative) shall provide a hard copy of all referenced standards in the technical specification sections –at the time of the preparatory inspection for each definable feature of work---as listed in the contractor’s Quality control plan.

The contractor shall submit for approval to the Contracting Officer ----- evidence of his procedure for access to the reference standards for all technical specifications (e.g. ASTM, ACI, NFPA and etc.) and include this submittal in the contractor’s Quality Control Plan.

1.25 ACCIDENT PREVENTION PLAN

In addition to the requirements in Division 01351, the contractor shall submit an accident prevention plan to the government for review prior to the start of any work.
The accident prevention plan shall be in accordance with EM 385-1-1- and the format of the accident prevention plan in EM 385-1-1---Appendix A shall be as follows

MINIMUM BASIC OUTLINE FOR ACCIDENT PREVENTION PLAN

An accident prevention plan is, in essence, a safety and health policy and program document. The following areas are typically addressed in an accident prevention plan, but a plan shall be job-specific and shall also address any unusual or unique aspects of the project or activity for which it is written. The accident prevention plan shall interface with the employer's overall safety and health program. Any portions of the overall safety and health program that are referenced in the accident prevention plan shall be included as appropriate.

1. SIGNATURE SHEET. Title, signature, and phone number of the following:
a. plan preparer (corporate safety staff person, DC).
b. plan approval, e.g., owner, company president, regional vice president (HTRW activities require approval of a Certified Industrial Hygienist (or Qualified Industrial Hygiene personnel for in-house USACE activities; a Certified Safety Professional (or Qualified USACE safety personnel for in-house work) may approve the plan for operations involving UST removal where contaminants are known to be petroleum, oils, or lubricants};

c. plan concurrence (provide concurrence of other applicable corporate and project personnel (contractor)" e.g., Chief of Operations, Corporate Chief of Safety, Corporate Industrial Hygienist, project manager or superintendent, project safety I professional, project DC.

2. BACKGROUND INFORMATION. List the following:
a. contractor.
b. contract number
c. project name
d. brief project description, description of work to be performed, and location (map);
e. contractor accident experience (provide information such as EMR, OSHA 200 Forms, corporate safety trend analyses);
f. listing of phases of work and hazardous activities requiring activity hazards analyses.

3. STATEMENT OF SAFETY AND HEALTH POLICY. (In addition to the corporate policy statement, a copy of the corporate safety program may provide a significant portion of the information required by the accident prevention plan.)

4. RESPONSIBILITIES AND LINES OF AUTHORITIES.
a. Identification and accountability of personnel responsible for safety -at both corporate and project level (contracts specifically requiring safety or industrial hygiene personnel should include a copy of their resume -the District Safety and Occupational Health Office will review the qualifications for acceptance).
b. lines of authority

5. SUBCONTRACTORS AND SUPPLIERS. Provide the following:
a. Identification of subcontractors and suppliers (if known);
b. Means for controlling and coordinating subcontractors and suppliers;
c. Safety responsibilities of subcontractors and suppliers.

6. TRAINING.
a. List subjects to be discussed with employees in safety indoctrination.
b. List mandatory training and certifications which are applicable to this project (e. g., explosive actuated tools, confined space entry, crane operator, diver, vehicle operator, HAZWOPER training and certification, personal protective equipment) and any requirements for periodic retraining/recertification.
c. Identify requirements for emergency response training.
d. Outline requirements (who attends, when given, who will conduct etc.) for supervisory and employee safety meetings.

7. SAFETY AND HEALTH INSPECTIONS. Provide details on:
a. Who will conduct safety inspections (e.g., project manager, safety professional, OC, supervisors, employees, etc.), when inspections will be conducted, how the inspections will be recorded, deficiency tracking system, follow-up procedures, etc.
b. Any external inspections/certifications, which may be required (e.g., Coast Guard).

8. SAFETY AND HEALTH EXPECT A TIONS, INCENTIVE PROGRAMS, AND COMPLIANCE.
a. The company's written safety program goals, objectives, and accident experience goals for this contract should be provided.
b. A brief description of the company's safety incentive programs (if any) should be provided.
c. Policies and procedures regarding noncompliance with safety requirements (to include disciplinary actions for violation of safety requirements) should be identified.
d. Provide written company procedures for holding managers and supervisors accountable for safety.

9. ACCIDENT REPORTING. The contractor shall identify who shall complete the following, how, and when:
a. Exposure data (man-hours worked);
b. Accident investigations, reports and logs;
c. Immediate notification of major accidents.

1O. MEDICAL SUPPORT. Outline on-site medical support and off-site medical arrangements. I

11. PERSONAL PROJECTIVE EQUIPMENT. Outline procedures (who, when, how) for conducting hazard assessments and written certifications for use of personal protective equipment.

12. PLANS (PROGRAMS, PROCEDURES) REQUIRED BY THE SAFETY MANUAL (as applicable)
a. Hazard communication program (01.B.04)
b. Emergency response plans:
-procedures and tests (O1.E.01) -spill plans (01 .E.01, 06.A.02)
-firefighting plan (01.E.01, 19.A.04)
-posting of emergency telephone numbers (01.E.04) -wildfire prevention plan (09.K.O1)
-man overboard/abandon ship (19.A.04) c. layout plans (04.A.01);
d. respiratory protection plan (05.E.01);
e. health hazard control program (06.A.02);
f. lead abatement plan (06.8.05 & specifications~;
g. asbestos abatement plan (06.8.05 & specifications);
h. abrasive blasting (06.H.01);
i. confined space (06.1)

j. hazardous energy control plan (12.A.07); k. critical lift procedures (16.C.17);

I. contingency plan for severe weather (19.A.03); m. access and haul road plan (22.1.10);

II.

n. demolition plan (engineering and asbestos surveys) (23.A.01);
o. emergency rescue (tunneling) (26~A.05);
p. underground construction fire prevention and protection plan (26.D.01)
q. compressed air plan (26.1.01)
r. formwork and shoring erection and removal plans

(27.8.02) \
s. lift slab plans (27.D.01)
t. SHP and SSHP (for HTRW work an SSHP must be submitted and shall contain all information required by the accident prevention plan -two documents are not required (28.8.01); 1
u. blasting plan (29.A.01); v. diving plan (30.A.13);
w. plan for prevention of alcohol and drug abuse (Defense Federal Acquisition Regulation Supplement Subpart 252.223-7004, DrugFree Work Force).

13. The contractor shall provide information on how they will meet the requirements of major sections of EM 385-1-1 in the requirements of major sections of EM 385-1-1 in the accident prevention plan. Particular attention shall be paid to excavations, scaffolding, medical and first aid requirements, sanitary, personal protective equipment, fire prevention, machinery and mechanized equipment, electrical safety, and public safety requirements, and chemical, physical agent, and biological occupational exposure prevention requirements.
Detailed site-specific hazards and controls shall be provided in the activity hazard analysis for each phase of the operation.

--End of Section--

SECTION TABLE OF CONTENTS

DIVISION 01 - GENERAL REQUIREMENTS

SECTION 01670

RECYCLED / RECOVERED MATERIALS

12/01

PART 1 GENERAL

1.1 REFERENCES
1.2 OBJECTIVES
1.3 EPA DESIGNATED ITEMS INCORPORATED IN THE WORK
1.4 EPA PROPOSED ITEMS INCORPORATED IN THE WORK
1.5 EPA LISTED ITEMS USED IN CONDUCT OF THE WORK BUT NOT INCORPORATED IN THE WORK

-- End of Section Table of Contents --

UFGS-01670 (December 2001)

SECTION 01670

RECYCLED / RECOVERED MATERIALS

12/01

PART 1 GENERAL

1.1 REFERENCES

The publications listed below form a part of this specification to the extent referenced. The publications are referred to in the text by basic designation only.

U.S. NATIONAL ARCHIVES AND RECORDS ADMINISTRATION (NARA)

40 CFR 247	Comprehensive Procurement Guideline for Products Containing Recovered Materials

1.2 OBJECTIVES

Government procurement policy is to acquire, in a cost effective manner, items containing the highest percentage of recycled and recovered materials practicable consistent with maintaining a satisfactory level of competition without adversely affecting performance requirements or exposing suppliers' employees to undue hazards from the recovered materials. The Environmental Protection Agency (EPA) has designated certain items which must contain a specified percent range of recovered or recycled materials. EPA designated products specified in this contract comply with the stated policy and with the EPA guidelines. The Contractor shall make all reasonable efforts to use recycled and recovered materials in providing the EPA designated products and in otherwise utilizing recycled and recovered materials in the execution of the work.

a. Recovered and Recycled Materials: weighted average, 10 percent post-consumer or 15 percent post-industrial.

a. Locally or Regionally Obtained Materials: weighted average, in the aggregate, 20 percent, of which 50 percent are harvested locally (= 10% of total).

1.3 EPA DESIGNATED ITEMS INCORPORATED IN THE WORK

Various sections of the specifications contain requirements for materials that have been designated by EPA as being products which are or can be made with recovered or recycled materials. These items, when incorporated into the work under this contract, shall contain at least the specified percentage of recycled or recovered materials unless adequate justification (non-availability) for non-use is provided. When a designated item is specified as an option to a non-designated item, the designated item requirements apply only if the designated item is used in the work.

1.4 EPA PROPOSED ITEMS INCORPORATED IN THE WORK

Products other than those designated by EPA are still being researched and are being considered for future Comprehensive Procurement Guideline (CPG) designation. It is recommended that these items, when incorporated in the work under this contract, contain the highest practicable percentage of recycled or recovered materials, provided specified requirements are also met.

1.5 EPA LISTED ITEMS USED IN CONDUCT OF THE WORK BUT NOT INCORPORATED IN THE WORK

There are many products listed in 40 CFR 247 which have been designated or proposed by EPA to include recycled or recovered materials that may be used by the Contractor in performing the work but will not be incorporated into the work. These products include office products, temporary traffic control products, and pallets. It is recommended that these non-construction products, when used in the conduct of the work, contain the highest practicable percentage of recycled or recovered materials and that these products be recycled when no longer needed.

-- End of Section --

SECTION 01780

CLOSEOUT SUBMITTALS

PART 1 GENERAL

1.1 SUBMITTALS

SD-02 Shop Drawings

As-Built Drawings; G, RE

Drawings showing final as-built conditions of the project. The final CADD as-built drawings shall consist of one set of electronic CADD drawing files in the specified format, two sets of blue-line prints, and one set of the approved working as-built drawings.

SD-03 Product Data

As-Built Record of Equipment and Materials;

Three copies of the record listing the as-built materials and equipment incorporated into the construction of the project.

Warranty Management Plan; G, RE

Two sets of the warranty management plan containing information relevant to the warranty of materials and equipment incorporated into the construction project, including the starting date of warranty of construction. The Contractor shall furnish with each warranty the name, address, and telephone number of each of the guarantor's representatives nearest to the project location.

Warranty Tags; G, RE

Three record copies of the warranty tags showing the layout and design.

Final Cleaning; G, RE

Three copies of the listing of completed final clean-up items.

1.2 PROJECT RECORD DOCUMENTS

1.2.1 As-Built Drawings

This paragraph covers as-built drawings complete, as a requirement of the contract. The terms "drawings," "contract drawings," "drawing files," "working as-built drawings" and "final as-built drawings" refer to contract drawings, which are revised to be used for final as-built drawings.

1.2.1.1 Government Furnished Materials

One set of electronic CADD files in the specified software and format revised to reflect all bid amendments will be provided by the Government at the prework design conference for projects requiring CADD file as-built drawings.

1.2.1.2 Working As-Built and Final As-Built Drawings

The Contractor shall revise 2 full size sets of paper drawings by red-line process to show the as-built conditions during the prosecution of the project. These working as-built marked drawings shall be kept current on a weekly basis and at least one set shall be available on the jobsite at all times. Changes from the contract plans which are made in the work or additional information, which might be uncovered in the course of construction, shall be accurately and neatly recorded as they occur by means of details and notes. Final as-built drawings shall be prepared after the completion of each definable feature of work as listed in the Contractor Quality Control Plan (Foundations, Utilities, Structural Steel, etc., as appropriate for the project). The working as-built marked prints and final as-built drawings will be jointly reviewed for accuracy and completeness by the Contracting Officer and the Contractor prior to submission of each monthly pay estimate. If the Contractor fails to maintain the working and final as-built drawings as specified herein, the Contracting Officer will deduct from the monthly progress payment an amount representing the estimated cost of maintaining the as-built drawings. This monthly deduction will continue until an agreement can be reached between the Contracting Officer and the Contractor regarding the accuracy and completeness of updated drawings. The working and final as-built drawings shall show, but shall not be limited to, the following information:

a. The actual location, kinds and sizes of all sub-surface utility lines. In order that the location of these lines and appurtenances may be determined in the event the surface openings or indicators become covered over or obscured, the as-built drawings shall show, by offset dimensions to two permanently fixed surface features, the end of each run including each change in direction. Valves, splice boxes and similar appurtenances shall be located by dimensioning along the utility run from a reference point. The average depth below the surface of each run shall also be recorded.

b. The location and dimensions of any changes within the building structure.

c. Correct grade, elevations, cross section, or alignment of roads, earthwork, structures or utilities if any changes were made from contract plans.

d. Changes in details of design or additional information obtained from working drawings specified to be prepared and/or furnished by the Contractor; including but not limited to fabrication, erection, installation plans and placing details, pipe sizes, insulation material, dimensions of equipment foundations, etc.

e. The topography, invert elevations and grades of drainage installed or affected as part of the project construction.

f. Changes or modifications, which result from the final inspection.

g. Where contract drawings or specifications present options, only the option selected for construction shall be shown on the final as-built prints.

h. If borrow material for this project is from sources on Government property, or if Government property is used as a spoil area, the Contractor shall furnish a contour map of the final borrow pit/spoil area elevations.

i. Systems designed or enhanced by the Contractor, such as HVAC controls, fire alarm, fire sprinkler, and irrigation systems.

j. Modifications (change order price shall include the Contractor's cost to change working and final as-built drawings to reflect modifications) and compliance with the following procedures.

(1) Directions in the modification for posting descriptive changes shall be followed.

(2) A Modification Circle shall be placed at the location of each deletion.

(3) For new details or sections, which are added to a drawing, a Modification Circle shall be placed by the detail or section title.

(4) For minor changes, a Modification Circle shall be placed by the area changed on the drawing (each location).

(5) For major changes to a drawing, a Modification Circle shall be placed by the title of the affected plan, section, or detail at each location.

(6) For changes to schedules or drawings, a Modification Circle shall be placed either by the schedule heading or by the change in the schedule.

(7) The Modification Circle size shall be 12.7 mm 1/2 inch diameter unless the area where the circle is to be placed is crowded. Smaller size circle shall be used for crowded areas.

1.2.1.3 Drawing Preparation

The as-built drawings shall be modified as may be necessary to correctly show the features of the project as it has been constructed by bringing the contract set into agreement with approved working as-built prints, and adding such additional drawings as may be necessary. These working as-built marked prints shall be neat, legible and accurate. These drawings are part of the permanent records of this project and shall be returned to the Contracting Officer after approval by the Government. Any drawings damaged or lost by the Contractor shall be satisfactorily replaced by the Contractor at no expense to the Government.

1.2.1.4 Computer Aided Design and Drafting (CADD) Drawings
Only personnel proficient in the preparation of CADD drawings shall be employed to modify the contract drawings or prepare additional new drawings. Additions and corrections to the contract drawings shall be equal in quality and detail to that of the originals. Line colors, line weights, lettering, layering conventions, and symbols shall be the same as the original line colors, line weights, lettering, layering conventions, and symbols. If additional drawings are required, they shall be prepared using the specified electronic file format applying the same graphic standards specified for original drawings. The title block and drawing border to be used for any new final as-built drawings shall be identical to that used on the contract drawings. Additions and corrections to the contract drawings shall be accomplished using CADD files. Electronic files will be supplied on compact disc, read-only memory (CD-ROM). The Contractor shall be responsible for providing all program files and hardware necessary to prepare final as-built drawings. The Contracting Officer will review final as-built drawings for

accuracy and the Contractor shall make required corrections, changes, additions, and deletions.

a. CADD colors shall be the "base" colors of red, green, and blue. Color code for changes shall be as follows;

(1) Deletions (red) -Deleted graphic items (lines) shall be colored red with red lettering in notes and leaders.

(2) Additions (Green) -Added items shall be drawn in green with green lettering in notes and leaders.

(3) Special (Blue) -Items requiring special information, coordination, or special detailing or detailing notes shall be in blue.

b. The Contract Drawing files shall be renamed in a manner related to the contract number (i.e., 98-C-10.DGN) as instructed in the Pre-Construction conference. Marked-up changes shall be made only to those renamed files. All changes shall be made on the layer/level as the original item. There shall be no deletions of existing lines; existing lines shall be over struck in red. Additions shall be in green with line weights the same as the drawing. Special notes shall be in blue on layer #63.

c. When final revisions have been completed, the cover sheet drawing shall show the wording "RECORD DRAWING AS-BUILT" followed by the name of the Contractor in letters at least 5 mm 3/16 inch high. All other contract drawings shall be marked either "AS-Built" drawing denoting no revisions on the sheet or "Revised As-Built" denoting one or more revisions. Original contract drawings shall be dated in the revision block.

d. Within 20 days for contracts $5 million and above after Government approval of all of the working as-built drawings for a phase of work, the Contractor shall prepare the final CADD as-built drawings for that phase of work and submit two sets of blue-lined prints of these drawings for Government review and approval. The Government will promptly return one set of prints annotated with any necessary corrections. Within 10 days for contracts $5-million and above the Contractor shall revise the CADD files accordingly at no additional cost and submit one set of final prints for the completed phase of work to the Government. Within 20 days for contracts $5 million and above of substantial completion of all phases of work, the Contractor shall submit the final as-built drawing package for the entire project. The submittal shall consist of one set of electronic files on compact disc, read-only memory (CD-ROM), one set of mylars, two sets of blue-line prints and one set of the approved working as-built drawings. They shall be complete in all details and identical in form and function to the contract drawing files supplied by the Government. Any transactions or adjustments necessary to accomplish this are the responsibility of the Contractor. The Government reserves the right to reject any drawing files it deems incompatible with the customer's CADD system. Paper prints, drawing files and storage media submitted will become the property of the Government upon final approval. Failure to submit final as-built drawing files and marked prints as specified shall be cause for withholding any payment due the Contractor under this contract. Approval and acceptance of final as-built drawings shall be accomplished before final payment is made to the Contractor.

1.2.1.5 Manually Prepared Drawings

Only personnel proficient in the preparation of manually prepared drawings shall be employed to modify the original contract drawing or prepare additional new drawings. Additions and corrections to the contract drawings shall be neat, clean and legible, shall be done to the same level of detail, and shall match the adjacent existing line work, and lettering being annotated in type, density, size and style. Drafting work shall be done using the same medium (pencil, plastic lead or ink) that was employed on the original contract drawings and with graphite lead on paper base material. The Contracting Officer will review as-built drawings for accuracy and conformance to the above specified drafting standards. Corrections, changes, additions, and deletions required shall meet these standards. The title block to be used for any new as-built drawings shall be similar to that used on the original drawings.

a. When final revisions have been completed, each drawing shall be lettered or stamped with the words "RECORD DRAWING AS-BUILT" followed by the name of the Contractor in letters at least 5 mm (3/16 inch) high. Original contract drawings shall be marked either "As-Built" drawings denoting no revisions on the sheet or "Revised As-Built" denoting one or more revisions. All original contract drawings shall be dated in the revision block.

b. Within 20 days for contracts $5 million and above after Government approval of all of the working as-built drawings for a phase of work, the Contractor shall prepare the final as-built drawings for that phase of work and submit two sets of blue-line prints of these drawings for Government review and approval. The Government will promptly return one set of prints annotated with any necessary corrections. Within 10 days for contracts $5 million and above the Contractor shall revise the drawings accordingly at no additional cost and submit one set of final prints for the completed phase of work to the Government. Within 20 days for contracts $5 million and above of substantial completion of all phases of work, the Contractor shall submit the final as-built drawing package for the entire project. The submittal shall consist of the completed final as-built drawings, two blue-line prints of these drawings and the return of the approved marked as-built prints. The drawings shall be complete in all details. Paper prints and reproducible drawings will become the property of the Government upon final approval. Failure to submit final as-built drawings and marked prints, as required herein, will be cause for withholding any payment due the Contractor under this contract. Approval and acceptance of final as-built drawings shall be accomplished before final payment is made to the Contractor.

1.2.1.6 Payment

No separate payment will be made for as-built drawings required under this contract, and all costs accrued in connection with such drawings shall be considered a subsidiary obligation of the Contractor.

1.2.2 As-Built Record of Equipment and Materials

The Contractor shall furnish two full size copies of preliminary record of equipment and materials used on the project 15 days prior to final inspection. This preliminary submittal will be reviewed and returned 2 days after final inspection with Government comments. Two sets of final record of equipment and materials shall be submitted 10 days after final inspection. The designations shall be keyed to the related area depicted on the contract drawings. The record shall list the following data:

RECORD OF DESIGNATED EQUIPMENT AND MATERIALS DATA

Description	Specification Section	Manufacturer and Catalog, Model, and Serial Number	Composition and Size	Where Used

1.2.3 Final Approved Shop Drawings

The Contractor shall furnish final approved project shop drawings 30 days after transfer of the completed facility.

1.2.4 Construction Contract Specifications

The Contractor shall furnish final as-built construction contract specifications, including modifications thereto, 30 days after transfer of the completed facility.

1.2.5 Real Property Equipment

The Contractor shall furnish a list of installed equipment furnished under this contract. The list shall include all information usually listed on manufacturer's nameplate. The "EQUIPMENT-IN-PLACE LIST" shall include, as applicable, the following for each piece of equipment installed: description of item, location (by room number), model number, serial number, capacity, name and address of manufacturer, name and address of equipment supplier, condition, spare parts list, manufacturer's catalog, and warranty. A draft list shall be furnished at time of transfer. The final list shall be furnished 30 days after transfer of the completed facility.

1.3 WARRANTY MANAGEMENT

1.3.1 Warranty Management Plan

The Contractor shall develop a warranty management plan, which shall contain information relevant to the clause Warranty of Construction. At least 30 days before the planned pre-warranty conference, the Contractor shall submit the warranty management plan for Government approval. **pre-warranty conference should be held not later than 90% complete or less than 50 days from the ACO anticipated pre-final date.** The warranty management plan shall include all required actions and documents to assure that the Government receives all warranties to which it is entitled. The plan shall be in narrative form and contain sufficient detail to render it suitable for use by future maintenance and repair personnel, whether tradesmen, or of engineering background, not necessarily familiar with this contract. The term "status" as indicated below shall include due date and whether item has been submitted or was accomplished. Warranty information made available during the construction phase shall be submitted to the Contracting Officer for approval prior to each monthly pay estimate. Approved information shall be assembled in a binder and shall be turned over to the Government upon acceptance of the work. The construction warranty period shall begin on the date of project acceptance and shall continue for the full product warranty period. A joint 4-month and 9-month warranty inspection shall be conducted, measured from time of acceptance, by the Contractor, Contracting Officer and the Customer Representative. Information contained in the warranty management plan shall include, but shall not be limited to, the following:

a. Roles and responsibilities of all personnel associated with the warranty process, including points of contact and telephone numbers within the organizations of the Contractors, subcontractors, manufacturers or suppliers involved.

b. Listing and status of delivery of all Certificates of Warranty for extended warranty items, to include roofs, HVAC balancing, pumps, motors, transformers, and for all commissioned systems such as fire protection and alarm systems, sprinkler systems, lightning protection systems, etc.

c. A list for each warranted equipment, item, and feature of construction or system indicating:

1. Name of item.

2. Model and serial numbers.

3. Location where installed.

4. Name and phone numbers of manufacturers or suppliers.

5. Names, addresses and telephone numbers of sources of spare parts.

6. Warranties and terms of warranty. This shall include 1 year overall warranty of construction. Items which have extended warranties shall be indicated with separate warranty expiration dates.

7. Cross-reference to warranty certificates as applicable.

8. Starting point and duration of warranty period.

9. Summary of maintenance procedures required to continue the warranty in force.

10. Cross-reference to specific pertinent operation and maintenance manuals.

11. Organization, names and phone numbers of persons to call for warranty service.

12. Typical response time and repair time expected for various warranted equipment.

d. The Contractor's plans for attendance at the 4- and 9-month post-construction warranty inspections conducted by the Government.

e. Procedure and status of tagging of all equipment covered by extended warranties.

f. Copies of instructions to be posted near selected pieces of equipment where operation is critical for warranty and/or safety reasons.

Warranty Management Plan--Implementation process

-The building {User POC} will contact the designated POC in DPW when a breakdown or failure occurs in the facility during the warranty period.

-The DPW will send a representative to the building to determine if the breakdown or failure is operation/maintenance or a warranty issue (failure of material and/or workmanship by the prime contractor)

-If the DPW representative determines the item is a warranty issue, the Project Engineer should be contacted immediately

-The Project Engineer will contact the contractor's (authorized point of contact on the list) and request immediate warranty correction of the item with the suspense date or urgency required (in writing by e-mail).

POINTS OF CONTACT -----POC

Contractor's Bonding Company

Obtain the POC from{ the contractor list of warranted equipment. (paragraph 1.3.1 (c)}

The point of contact {name and duty phone numbers for manufacturers or suppliers
The point of contact (names, addresses, and duty phone numbers for the sources of spare parts.

The contractor's Performance Bond shall remain effective throughout the construction period and one-year warranty period. -paragraph 1.3.2

The contractor shall furnish the POC----name, duty and non-duty telephone number and address of a licensed and bonded company, which is authorized to initiate and pursue construction warranty work action on behalf of the contractor.

This POC for bonding company will be located within the local service area of the warranted construction and shall be continuously available ---and shall be responsive to Government inquiry on warranty work-paragraph 1.3.2 (c)

PRIME CONTRACTOR:

(Home office -------
and local area POC)

Primary and Alternate
{name—duty and non-duty(emergency) telephone numbers—pagers—cell phone numbers and address }

SUBCONTRACTORS:

Primary and Alternate
{name—duty and non-duty(emergency) telephone numbers—pagers—cell phone numbers and address }for the warranty work for the following construction items.

Structure (steel)

Exterior walls /windows (CMU -vapor barrier—insulation)

Roof—Building dry-in

Wall finish----(gypsum wallboard—coatings—wall coverings)

Doors and hardware

Floor finish (VCT—carpet—tile)

Painting

Miscellanous Equipment /casework/ kitchen equipment

Ceiling

Plumbing (finish-fixtures—toilet partitions)

HVAC—equipment (Fan cool units--AHU Chillers-chilled water pipe etc)
(Heating -boilers -heating piping -etc) ---

HVAC controls

Interior electrical systems (light fixtures—intercom—security - fire system
controls --etc)

Interior mechanical systems (fire sprinkler system -dometic water -water heater -etc)

ONSITE UTILITIES—SD—SS—Exterior Electrical—telephone--

Paving/ Landscaping

1.3.2 Performance Bond

The Contractor's performance bond shall remain effective throughout the construction period.

a. In the event the Contractor fails to commence and diligently pursue any construction warranty work required, the Contracting Officer will have the work performed by others, and after completion of the work, will charge the remaining construction warranty funds of expenses incurred by the Government while performing the work, including, but not limited to administrative expenses.

b. In the event sufficient funds are not available to cover the construction warranty work performed by the Government at the Contractor's expense, the Contracting Officer will have the right to recoup expenses from the bonding company.

c. Following oral or written notification of required construction warranty repair work, the Contractor shall respond in a timely manner. Written verification will follow oral instructions. Failure of the Contractor to respond will be cause for the Contracting Officer to proceed against the Contractor.

1.3.3 Pre-Warranty Conference

Prior to contract completion, and at a time designated by the Contracting Officer, the Contractor shall meet with the Contracting Officer to develop a mutual understanding with respect to the requirements of this section. Communication procedures for Contractor notification of construction warranty defects, priorities with respect to the type of defect, reasonable time required for Contractor response, and other details deemed necessary by the Contracting Officer for the execution of the construction warranty shall be established/reviewed at this meeting. In connection with these requirements and at the time of the Contractor's quality control completion inspection, the Contractor shall furnish the name, telephone number and address of a licensed and bonded company, which is authorized to initiate and pursue construction warranty work action on behalf of the Contractor. This point of contact will be located within the local service area of the warranted construction, shall be continuously available, and shall be responsive to Government inquiry on warranty work action and status. This requirement does not relieve the Contractor of any of its responsibilities in connection with other portions of this provision.

1.3.4 Contractor's Response to Construction Warranty Service Requirements

Following oral or written notification by the Contracting Officer, the Contractor shall respond to construction warranty service requirements in accordance with the "Construction Warranty Service Priority List" and the three categories of priorities listed below. The Contractor shall submit a report on any warranty item that has been repaired during the warranty period. The report shall include the cause of the problem, date reported, corrective action taken, and when the repair was completed. If the Contractor does not perform the construction warranty within the timeframes specified, the Government will perform the work and back charge the construction warranty payment item established.

a. First Priority Code 1. Perform onsite inspection to evaluate situation, and determine course of action within 4 hours, initiate work within 6 hours and work continuously to completion or relief.

b. Second Priority Code 2. Perform onsite inspection to evaluate situation, and determine course of action within 8 hours, initiate work within 24 hours and work continuously to completion or relief.

c. Third Priority Code 3. All remaining work shall be initiated within 3 workdays and work progress shall be continuous to completion or relief.

d. The "Construction Warranty Service Priority List" is as follows:

Code 1-Air Conditioning Systems
(1) Recreational support.
(2) Air conditioning leak in part of building, if causing damage.
(3) Air conditioning system not cooling properly.

Code 1-Doors
(1) Overhead doors not operational, causing a security, fire, or safety problem.
(2) Interior, exterior personnel doors or hardware, not functioning properly, causing a security, fire, or safety problem.

Code 3-Doors
(1) Overhead doors not operational.
(2) Interior/exterior personnel doors or hardware not functioning properly.

Code 1-Electrical
(1) Power failure (entire area or any building operational after 1600 hours).
(2) Security lights
(3) Smoke detectors

Code 2-Electrical

(l) Power failure (no power to a room or part of building).

(2) Receptacle and lights (in a room or part of building).

Code 3-Electrical
Streetlights.

Code l-Gas
(l) Leaks and breaks.
(2) No gas to family housing unit or cantonment area.

Code l-Heat
(1). Area power failure affecting heat. (2). Heater in unit not working.

Code 2-Kitchen Equipment
(l) Dishwasher not operating properly.
(2) All other equipment hampering preparation of a meal.

Code 1-Plumbing
(1) Hot water heater failure.
(2) Leaking water supply pipes.

Code 2-Plumbing
(1) Flush valves not operating properly.
(2) Fixture drain, supply line to commode, or any water pipe leaking.
(3) Commode leaking at base.

Code 3-Plumbing
Leaky faucets.

Code 3-Interior
(1) Floors damaged.
(2) Paint chipping or peeling. (3) Casework.

Code 1-Roof Leaks
Temporary repairs will be made where major damage to property is occurring.

Code 2-Roof Leaks
Where major damage to property is not occurring, check for location of leak during rain and complete repairs on a Code 2 basis.

Code 2-Water (Exterior)
No water to facility.

Code 2-Water (Hot)
No hot water in portion of building listed.

Code 3-All other work not listed above.

1.3.5 Warranty Tags

At the time of installation, each warranted item shall be tagged with a durable, oil and water-resistant tag approved by the Contracting Officer. Each tag shall be attached with a copper wire and shall be sprayed with a silicone waterproof coating. The date of acceptance and the QC signature shall remain blank until project is accepted for beneficial occupancy. The tag shall show the following information.

Type of product/material _____.

b. Model number _____.

c. Serial number _____.

d. Contract number _____.

e. Warranty period from _____ to _____.

f. Inspector's signature _____.

g. Construction Contractor _____.

Address _____.

Telephone number _____.

h. Warranty contact _____.

Address _____.

Telephone number _____.

i. Warranty response time priority code _____.

j. WARNING -PROJECT PERSONNEL TO PERFORM ONLY OPERATIONAL MAINTENANCE DURING THE WARRANTY PERIOD.

1.4 MECHANICAL TESTING, ADJUSTING, BALANCING, AND COMMISSIONING

Prior to PRE-final inspection and transfer of the completed facility; all reports, statements, certificates, and completed checklists for testing, adjusting, balancing, and commissioning of mechanical systems shall be

submitted to and approved by the Contracting Officer as specified in applicable technical specification sections.

1.5 OPERATION AND MAINTENANCE MANUALS

Operation manuals and maintenance manuals shall be submitted as specified. Operation manuals and maintenance manuals provided in a common volume shall be clearly differentiated and shall be separately indexed.

1.6 FINAL CLEANING

The premises shall be left broom clean. Stains, foreign substances, and temporary labels shall be removed from surfaces. Carpet and soft surfaces shall be vacuumed. Equipment and fixtures shall be cleaned to a sanitary condition. Filters of operating equipment shall be replaced. Debris shall be removed from roofs, drainage systems, gutters, and downspouts. Paved areas shall be swept and landscaped areas shall be raked clean. The site shall have waste, surplus materials, and rubbish removed. The project area shall have temporary structures, barricades, project signs, and construction facilities removed. A list of completed clean-up items shall be submitted on the day of final inspection.

PART 2 PRODUCTS (NOT USED)

PART 3 EXECUTION (NOT USED)

--End of Section --

SECTION TABLE OF CONTENTS

DIVISION 01 - GENERAL REQUIREMENTS

SECTION 01781

OPERATION AND MAINTENANCE DATA

12/01

PART 1 GENERAL

1.1 SUBMISSION OF OPERATION AND MAINTENANCE DATA
1.1.1 Package Quality
1.1.2 Package Content
1.1.3 Changes to Submittals
1.2 TYPES OF INFORMATION REQUIRED IN O&M DATA PACKAGES
1.2.1 Operating Instructions
1.2.1.1 Safety Precautions
1.2.1.2 Operator Prestart
1.2.1.3 Startup, Shutdown, and Post-Shutdown Procedures
1.2.1.4 Normal Operations
1.2.1.5 Emergency Operations
1.2.1.6 Operator Service Requirements
1.2.1.7 Environmental Conditions
1.2.2 Preventive Maintenance
1.2.2.1 Lubrication Data
1.2.2.2 Preventive Maintenance Plan and Schedule
1.2.3 Corrective Maintenance (Repair)
1.2.3.1 Troubleshooting Guides and Diagnostic Techniques
1.2.3.2 Wiring Diagrams and Control Diagrams
1.2.3.3 Maintenance and Repair Procedures
1.2.3.4 Removal and Replacement Instructions
1.2.3.5 Spare Parts and Supply Lists
1.2.4 Corrective Maintenance Work-Hours
1.2.5 Appendices
1.2.6 Parts Identification
1.2.6.1 Warranty Information
1.2.6.2 Personnel Training Requirements
1.2.6.3 Testing Equipment and Special Tool Information
1.2.6.4 Contractor Information
1.3 SCHEDULE OF OPERATION AND MAINTENANCE DATA PACKAGES
1.3.1 Data Package 1
1.3.2 Data Package 2
1.3.3 Data Package 4

PART 2 PRODUCTS

PART 3 EXECUTION

-- End of Section Table of Contents --

UFGS-01781 (December 2001)

SECTION 01781

OPERATION AND MAINTENANCE DATA
12/01

PART 1 GENERAL

1.1 SUBMISSION OF OPERATION AND MAINTENANCE DATA

Submit Operation and Maintenance (O&M) Data specifically applicable to this contract and a complete and concise depiction of the provided equipment, product, or system. Organize and present information in sufficient detail to clearly explain O&M requirements at the system, equipment, component, and subassembly level. Include an index preceding each submittal. Submit in accordance with this section and Section 01330, "Submittal Procedures."

1.1.1 Package Quality

Documents must be fully legible. Poor quality copies and material with hole punches obliterating the text or drawings will not be accepted.

1.1.2 Package Content

Data package content shall be as shown in the paragraph titled "Schedule of Operation and Maintenance Data Packages." Comply with the data package requirements specified in the individual technical sections, including the content of the packages and addressing each product, component, and system designated for data package submission.

1.1.3 Changes to Submittals

Manufacturer-originated changes or revisions to submitted data shall be furnished by the Contractor if a component of an item is so affected subsequent to acceptance of the O&M Data. Changes, additions, or revisions required by the Contracting Officer for final acceptance of submitted data, shall be submitted by the Contractor within 30 calendar days of the notification of this change requirement.

1.2 TYPES OF INFORMATION REQUIRED IN O&M DATA PACKAGES

1.2.1 Operating Instructions

Include specific instructions, procedures, and illustrations for the following phases of operation:

1.2.1.1 Safety Precautions

List personnel hazards and equipment or product safety precautions for all operating conditions.

1.2.1.2 Operator Prestart

Include procedures required to set up and prepare each system for use.

1.2.1.3 Startup, Shutdown, and Post-Shutdown Procedures

Provide narrative description for Startup, Shutdown and Post-shutdown operating procedures including the control sequence for each procedure.

1.2.1.4 Normal Operations

Provide narrative description of Normal Operating Procedures. Include Control Diagrams with data to explain operation and control of systems and specific equipment.

1.2.1.5 Emergency Operations

Include Emergency Procedures for equipment malfunctions to permit a short period of continued operation or to shut down the equipment to prevent further damage to systems and equipment. Include Emergency Shutdown Instructions for fire, explosion, spills, or other foreseeable contingencies. Provide guidance and procedures for emergency operation of all utility systems including required valve positions, valve locations and zones or portions of systems controlled.

1.2.1.6 Operator Service Requirements

Include instructions for services to be performed by the operator such as lubrication, adjustment, inspection, and recording gage readings.

1.2.1.7 Environmental Conditions

Include a list of Environmental Conditions (temperature, humidity, and other relevant data) that are best suited for the operation of each product, component or system. Describe conditions under which the item equipment should not be allowed to run.

1.2.2 Preventive Maintenance

Include the following information for preventive and scheduled maintenance to minimize corrective maintenance and repair.

1.2.2.1 Lubrication Data

Include preventative maintenance lubrication data, in addition to instructions for lubrication provided under paragraph titled "Operator Service Requirements":

a. A table showing recommended lubricants for specific temperature ranges and applications.

b. Charts with a schematic diagram of the equipment showing lubrication points, recommended types and grades of lubricants, and capacities.

c. A Lubrication Schedule showing service interval frequency.

1.2.2.2 Preventive Maintenance Plan and Schedule

Include manufacturer's schedule for routine preventive maintenance, inspections, tests and adjustments required to ensure proper and economical operation and to minimize corrective maintenance. Provide manufacturer's projection of preventive maintenance work-hours on a daily, weekly,

monthly, and annual basis including craft requirements by type of craft. For periodic calibrations, provide manufacturer's specified frequency and procedures for each separate operation.

1.2.3 Corrective Maintenance (Repair)

Include manufacturer's recommended procedures and instructions for correcting problems and making repairs.

1.2.3.1 Troubleshooting Guides and Diagnostic Techniques

Include step-by-step procedures to promptly isolate the cause of typical malfunctions. Describe clearly why the checkout is performed and what conditions are to be sought. Identify tests or inspections and test equipment required to determine whether parts and equipment may be reused or require replacement.

1.2.3.2 Wiring Diagrams and Control Diagrams

Wiring diagrams and control diagrams shall be point-to-point drawings of wiring and control circuits including factory-field interfaces. Provide a complete and accurate depiction of the actual job specific wiring and control work. On diagrams, number electrical and electronic wiring and pneumatic control tubing and the terminals for each type, identically to actual installation configuration and numbering.

1.2.3.3 Maintenance and Repair Procedures

Include instructions and alist of tools required to repair or restore the product or equipment to proper condition or operating standards.

1.2.3.4 Removal and Replacement Instructions

Include step-by-step procedures and a list required tools and supplies for removal, replacement, disassembly, and assembly of components, assemblies, subassemblies, accessories, and attachments. Provide tolerances, dimensions, settings and adjustments required. Instructions shall include a combination of text and illustrations.

1.2.3.5 Spare Parts and Supply Lists

Include lists of spare parts and supplies required for maintenance and repair to ensure continued service or operation without unreasonable delays. Special consideration is required for facilities at remote locations. List spare parts and supplies that have a long lead-time to obtain.

1.2.4 Corrective Maintenance Work-Hours

Include manufacturer's projection of corrective maintenance work-hours including requirements by type of craft. Corrective maintenance that requires completion or participation of the equipment manufacturer shall be identified and tabulated separately.

1.2.5 Appendices

Provide information required below and information not specified in the preceding paragraphs but pertinent to the maintenance or operation of the product or equipment. Include the following:

1.2.6 Parts Identification

Provide identification and coverage for all parts of each component, assembly, subassembly, and accessory of the end items subject to replacement. Include special hardware requirements, such as requirement to use high-strength bolts and nuts. Identify parts by make, model, serial number, and source of supply to allow reordering without further identification. Provide clear and legible illustrations, drawings, and exploded views to enable easy identification of the items. When illustrations omit the part numbers and description, both the illustrations and separate listing shall show the index, reference, or key number that will cross-reference the illustrated part to the listed part. Parts shown in the listings shall be grouped by components, assemblies, and subassemblies in accordance with the manufacturer's standard practice. Parts data may cover more than one model or series of equipment, components, assemblies, subassemblies, attachments, or accessories, such as typically shown in a master parts catalog

1.2.6.1 Warranty Information

List and explain the various warranties and include the servicing and technical precautions prescribed by the manufacturers or contract documents in order to keep warranties in force. Include warranty information for primary components such as the compressor of air conditioning system.

1.2.6.2 Personnel Training Requirements

Provide information available from the manufacturers that is needed for use in training designated personnel to properly operate and maintain the equipment and systems.

1.2.6.3 Testing Equipment and Special Tool Information

Include information on test equipment required to perform specified tests and on special tools needed for the operation, maintenance, and repair of components.

1.2.6.4 Contractor Information

Provide a list that includes the name, address, and telephone number of the General Contractor and each Subcontractor who installed the product or equipment, or system. For each item, also provide the name address and telephone number of the manufacturer's representative and service organization most convenient to the project site. Provide the name, address, and telephone number of the product, equipment, and system manufacturers.

1.3 SCHEDULE OF OPERATION AND MAINTENANCE DATA PACKAGES

Furnish the O&M data packages specified in individual technical sections. The required information for each O&M data package is as follows:

1.3.1 Data Package 1

a. Safety precautions

b. Maintenance and repair procedures

c. Warranty information

d. Contractor information

e. Spare parts and supply list

1.3.2 Data Package 2

a. Safety precautions

b. Normal operations

c. Environmental conditions

d. Lubrication data

e. Preventive maintenance plan and schedule

f. Maintenance and repair procedures

g. Removal and replacement instructions

h. Spare parts and supply list

i. Parts identification

j. Warranty information

k. Contractor information

1.3.3 Data Package 4

a. Safety precautions

b. Operator prestart

c. Startup, shutdown, and post-shutdown procedures

d. Normal operations

e. Emergency operations

f. Operator service requirements

g. Environmental conditions

h. Lubrication data

i. Preventive maintenance plan and schedule

j. Troubleshooting guides and diagnostic techniques

k. Wiring diagrams and control diagrams

l. Maintenance and repair procedures

m. Removal and replacement instructions

n. Spare parts and supply list

o. Corrective maintenance man-hours

p. Parts identification

q. Warranty information

r. Personnel training requirements

s. Testing equipment and special tool information

t. Contractor information

PART 2 PRODUCTS

Not used.

PART 3 EXECUTION

Not used.

-- End of Section --

SECTION TABLE OF CONTENTS

DIVISION 02 - SITE CONSTRUCTION

SECTION 02220

DEMOLITION

09/03

PART 1 GENERAL

1.1 REFERENCES
1.2 GENERAL REQUIREMENTS
1.3 SUBMITTALS
1.4 REGULATORY AND SAFETY REQUIREMENTS
1.4.1 Notifications
1.4.1.1 General Requirements
1.5 DUST AND DEBRIS CONTROL
1.6 PROTECTION
1.6.1 Traffic Control Signs
1.6.2 Existing Work
1.6.3 Trees
1.6.4 Facilities
1.6.5 Protection of Personnel
1.7 BURNING
1.8 RELOCATIONS
1.9 USE OF EXPLOSIVES

PART 2 PRODUCTS

PART 3 EXECUTION

3.1 EXISTING FACILITIES TO BE REMOVED
3.1.1 Structures
3.1.2 Utilities and Related Equipment
3.1.3 Paving and Slabs
3.2 FILLING
3.3 DISPOSITION OF MATERIAL
3.3.1 Title to Materials
3.3.2 Reuse of Materials and Equipment
3.4 CLEANUP

-- End of Section Table of Contents --

UFGS-02220 (September 2003)

SECTION 02220

DEMOLITION
09/03

PART 1 GENERAL

1.1 REFERENCES

The publications listed below form a part of this specification to the extent referenced. The publications are referred to within the text by the basic designation only.

AMERICAN NATIONAL STANDARDS INSTITUTE (ANSI)

ANSI A10.6	(1990; R 1998) Safety Requirements for Demolition Operations

THE NATIONAL ARCHIVES AND RECORDS ADMINISTRATION (NARA)

40 CFR 61-SUBPART M	National Emission Standard for Asbestos

U.S. ARMY CORPS OF ENGINEERS (USACE)

EM 385-1-1	(2003) Safety and Health Requirements Manual

1.2 GENERAL REQUIREMENTS

Do not begin demolition until authorization is received from the Contracting Officer. The work includes demolition, salvage of identified items and materials, and removal of resulting rubbish and debris. Rubbish and debris shall be removed from Government property daily, unless otherwise directed, to avoid accumulation at the demolition site. Materials that cannot be removed daily shall be stored in areas specified by the Contracting Officer. In the interest of occupational safety and health, the work shall be performed in accordance with EM 385-1-1, Section 23, Demolition, and other applicable Sections. In the interest of conservation, salvage shall be pursued to the maximum extent possible (in accordance with Section 01670 RECYCLED / RECOVERED MATERIALS, if applicable; salvaged items and materials shall be disposed of as specified.

1.3 SUBMITTALS

Government approval is required for submittals with a "G" designation; submittals not having a "G" designation are for information only or as otherwise designated. When used, a designation following the "G" designation identifies the office that will review the submittal for the Government. The following shall be submitted in accordance with Section 01330 SUBMITTAL PROCEDURES:

SD-07 Certificates

Notifications

Submit a copy of the Project Notification for Asbestos Renovation, Encapsulation, or Demolition form as submitted to GA Environmental Protection Division

1.4 REGULATORY AND SAFETY REQUIREMENTS

Comply with federal, state, and local hauling and disposal regulations. In addition to the requirements of the "Contract Clauses," safety requirements shall conform with ANSI A10.6.

1.4.1 Notifications

1.4.1.1 General Requirements

Furnish timely notification of demolition projects to Federal, State, regional, and local authorities in accordance with 40 CFR 61-SUBPART M. Notify the State's environmental protection agency and the Contracting Officer in writing 10 working days prior to the commencement of work in accordance with 40 CFR 61-SUBPART M.

1.5 DUST AND DEBRIS CONTROL

Prevent the spread of dust and debris and avoid the creation of a nuisance in the surrounding area. Do not use water if it results in hazardous or objectionable conditions such as, but not limited to, ice, flooding, or pollution.

1.6 PROTECTION

1.6.1 Traffic Control Signs

Where pedestrian and driver safety is endangered in the area of removal work, use traffic barricades with flashing lights. Notify the Contracting Officer prior to beginning such work.

1.6.2 Existing Work

Before beginning any demolition work, the Contractor shall survey the site and examine the drawings and specifications to determine the extent of the work. The Contractor shall take necessary precautions to avoid damage to existing items to remain in place, to be reused, or to remain the property of the Government; any damaged items shall be repaired or replaced as approved by the Contracting Officer. The Contractor shall coordinate the work of this section with all other work and shall construct and maintain shoring, bracing, and supports as required. The Contractor shall ensure that structural elements are not overloaded and shall be responsible for increasing structural supports or adding new supports as may be required as a result of any cutting, removal, or demolition work performed under this contract. Do not overload pavements to remain. Provide new supports and reinforcement for existing construction weakened by demolition or removal work. Repairs, reinforcement, or structural replacement must have Contracting Officer approval.

1.6.3 Trees

Trees within the project site which might be damaged during demolition, and which are indicated to be left in place, shall be protected by a 6 foot high fence. The fence shall be securely erected a minimum of 5 feet from the trunk of individual trees or follow the outer perimeter of branches or

clumps of trees. Any tree designated to remain that is damaged during the work under this contract shall be replaced in kind or as approved by the Contracting Officer.

1.6.4 Facilities

Protect electrical and mechanical services and utilities. Where removal of existing utilities and pavement is specified or indicated, provide approved barricades, temporary covering of exposed areas, and temporary services or connections for electrical and mechanical utilities. Floors, roofs, walls, columns, pilasters, and other structural components that are designed and constructed to stand without lateral support or shoring, and are determined to be in stable condition, shall remain standing without additional bracing, shoring, of lateral support until demolished, unless directed otherwise by the Contracting Officer. The Contractor shall ensure that no elements determined to be unstable are left unsupported and shall be responsible for placing and securing bracing, shoring, or lateral supports as may be required as a result of any cutting, removal, or demolition work performed under this contract.

1.6.5 Protection of Personnel

During the demolition work the Contractor shall continuously evaluate the condition of the structure being demolished and take immediate action to protect all personnel working in and around the demolition site. No area, section, or component of floors, roofs, walls, columns, pilasters, or other structural element will be allowed to be left standing without sufficient bracing, shoring, or lateral support to prevent collapse or failure while workmen remove debris or perform other work in the immediate area.

1.7 BURNING

The use of burning at the project site for the disposal of refuse and debris will not be permitted.

1.8 RELOCATIONS

Perform the removal and reinstallation of relocated items as indicated with workmen skilled in the trades involved. Repair items to be relocated which are damaged or replace damaged items with new undamaged items as approved by the Contracting Officer.

1.9 USE OF EXPLOSIVES

Use of explosives will not be permitted.

PART 2 PRODUCTS

Not used.

PART 3 EXECUTION

3.1 EXISTING FACILITIES TO BE REMOVED

3.1.1 Structures

Existing structures indicated shall be removed to grade. Interior walls, other than retaining walls and partitions, shall be removed to top of concrete slab on ground. Basement slabs shall be broken up to permit

drainage. Sidewalks, curbs, gutters and street light bases shall be removed as indicated.

3.1.2 Utilities and Related Equipment

Remove existing utilities, as indicated and terminate in a manner conforming to the nationally recognized code covering the specific utility and approved by the Contracting Officer. When utility lines are encountered that are not indicated on the drawings, the Contracting Officer shall be notified prior to further work in that area. If utility lines are encountered that are not shown on drawings, contact the Contracting Officer for further instructions.

3.1.3 Paving and Slabs

Remove sawcut concrete and asphaltic concrete paving and slabs as indicated to a depth of 3 inches below new finish grade. Provide neat sawcuts at limits of pavement removal as indicated.

3.2 FILLING

Holes, open basements and other hazardous openings shall be filled in accordance with Section 02300-EARTHWORK.

3.3 DISPOSITION OF MATERIAL

3.3.1 Title to Materials

Except where specified in other sections, all materials and equipment removed, and not reused, shall become the property of the Contractor and shall be removed from Government property. Title to materials resulting from demolition, and materials and equipment to be removed, is vested in the Contractor upon approval by the Contracting Officer of the Contractor's demolition and removal procedures, and authorization by the Contracting Officer to begin demolition. The Government will not be responsible for the condition or loss of, or damage to, such property after contract award. Materials and equipment shall not be viewed by prospective purchasers or sold on the site.

3.3.2 Reuse of Materials and Equipment

Remove and store materials and equipment indicated to be reused or relocated to prevent damage, and reinstall as the work progresses.

3.4 CLEANUP

Debris and rubbish shall be removed from basement and similar excavations. Debris shall be removed and transported in a manner that prevents spillage on streets or adjacent areas. Local regulations regarding hauling and disposal shall apply.

-- End of Section --

SECTION TABLE OF CONTENTS

DIVISION 02 - SITE CONSTRUCTION

SECTION 02231

CLEARING AND GRUBBING

09/03

PART 1 GENERAL

1.1 SUBMITTALS
1.2 DELIVERY, STORAGE, AND HANDLING

PART 2 PRODUCTS

2.1 TREE WOUND PAINT

PART 3 EXECUTION

3.1 PROTECTION
3.1.1 Roads and Walks
3.1.2 Trees, Shrubs, and Existing Facilities
3.1.3 Utility Lines
3.2 CLEARING
3.3 TREE REMOVAL
3.4 GRUBBING
3.5 DISPOSAL OF MATERIALS
3.5.1 Saleable Timber
3.5.2 Nonsaleable Materials

-- End of Section Table of Contents --

UFGS-02231 (September 2003)

SECTION 02231

CLEARING AND GRUBBING
09/03

PART 1 GENERAL

1.1 SUBMITTALS

Government approval is required for submittals with a "G" designation; submittals not having a "G" designation are for information only or as otherwise designated. When used, a designation following the "G" designation identifies the office that will review the submittal for the Government. The following shall be submitted in accordance with Section 01330 SUBMITTAL PROCEDURES:

SD-03 Product Data

Nonsaleable Materials; G

Written permission to dispose of such products on private property shall be filed with the Contracting Officer.

SD-04 Samples

Tree wound paint

Submit samples in cans with manufacturer's label.

1.2 DELIVERY, STORAGE, AND HANDLING

Deliver materials to, store at the site, and handle in a manner which will maintain the materials in their original manufactured or fabricated condition until ready for use.

PART 2 PRODUCTS

2.1 TREE WOUND PAINT

Bituminous based paint of standard manufacture specially formulated for tree wounds.

PART 3 EXECUTION

3.1 PROTECTION

3.1.1 Roads and Walks

Keep roads and walks free of dirt and debris at all times.

3.1.2 Trees, Shrubs, and Existing Facilities

Trees and vegetation to be left standing shall be protected from damage incident to clearing, grubbing, and construction operations by the erection of barriers or by such other means as the circumstances require.

3.1.3 Utility Lines

Protect existing utility lines that are indicated to remain from damage. Notify the Contracting Officer immediately of damage to or an encounter with an unknown existing utility line. The Contractor shall be responsible for the repairs of damage to existing utility lines that are indicated or made known to the Contractor prior to start of clearing and grubbing operations. When utility lines which are to be removed are encountered within the area of operations, the Contractor shall notify the Contracting Officer in ample time to minimize interruption of the service.

3.2 CLEARING

Clearing shall consist of the felling, trimming, and cutting of trees into sections and the satisfactory disposal of the trees and other vegetation designated for removal, including downed timber, snags, brush, and rubbish occurring within the areas to be cleared. Trees, stumps, roots, brush, and other vegetation in areas to be cleared shall be cut off flush with or below the original ground surface, except such trees and vegetation as may be indicated or directed to be left standing. Trees designated to be left standing within the cleared areas shall be trimmed of dead branches 1-1/2 inches or more in diameter. Limbs and branches to be trimmed shall be neatly cut close to the bole of the tree or main branches. Cuts more than 1-1/2 inches in diameter shall be painted with an approved tree-wound paint.

3.3 TREE REMOVAL

Where indicated or directed, trees and stumps that are designated as trees shall be removed from areas outside those areas designated for clearing and grubbing. This work shall include the felling of such trees and the removal of their stumps and roots as specified in paragraph GRUBBING. Trees shall be disposed of as specified in paragraph DISPOSAL OF MATERIALS.

3.4 GRUBBING

Grubbing shall consist of the removal and disposal of stumps, roots larger than 3 inches in diameter, and matted roots from the designated grubbing areas. Material to be grubbed, together with logs and other organic or metallic debris not suitable for foundation purposes, shall be removed to a depth of not less than 18 inches below the original surface level of the ground in areas indicated to be grubbed and in areas indicated as construction areas under this contract, such as areas for buildings, and areas to be paved. Depressions made by grubbing shall be filled with suitable material and compacted to make the surface conform with the original adjacent surface of the ground.

3.5 DISPOSAL OF MATERIALS

3.5.1 Saleable Timber

All timber on the project site noted for clearing and grubbing shall become the property of the Contractor, and shall be removed from the project site and disposed of off stations.

3.5.2 Nonsaleable Materials

Logs, stumps, roots, brush, rotten wood, and other refuse from the clearing and grubbing operations, except for salable timber, shall be disposed of

outside the limits of Government-controlled land at the Contractor's responsibility, except when otherwise directed in writing. Such directive will state the conditions covering the disposal of such products and will also state the areas in which they may be placed.

-- End of Section --

SECTION TABLE OF CONTENTS

DIVISION 02 - SITE CONSTRUCTION

SECTION 02300

EARTHWORK

12/97

PART 1 GENERAL

1.1 REFERENCES
1.2 DEFINITIONS
1.2.1 Satisfactory Materials
1.2.2 Unsatisfactory Materials
1.2.3 Cohesionless and Cohesive Materials
1.2.4 Degree of Compaction
1.2.5 Topsoil
1.3 SUBMITTALS
1.4 SUBSURFACE DATA
1.5 CLASSIFICATION OF EXCAVATION
1.6 BLASTING
1.7 UTILIZATION OF EXCAVATED MATERIALS

PART 2 PRODUCTS (NOT USED)

PART 3 EXECUTION

3.1 STRIPPING OF TOPSOIL
3.2 GENERAL EXCAVATION
3.2.1 Ditches, Gutters, and Channel Changes
3.2.2 Drainage Structures
3.3 SELECTION OF BORROW MATERIAL
3.4 OPENING AND DRAINAGE OF EXCAVATION AND BORROW PITS
3.5 GRADING AREAS
3.6 BACKFILL
3.7 PREPARATION OF GROUND SURFACE FOR EMBANKMENTS
3.7.1 General Requirements
3.7.2 Frozen Material
3.8 EMBANKMENTS
3.8.1 Earth Embankments
3.8.2 Moisture Content
3.9 SUBGRADE PREPARATION
3.9.1 Construction
3.9.2 Moisture Content
3.9.3 Compaction
3.9.3.1 Subgrade for Pavements
3.9.3.2 Subgrade for Shoulders
3.10 SHOULDER CONSTRUCTION
3.11 FINISHING
3.12 PLACING TOPSOIL
3.13 TESTING
3.13.1 Fill and Backfill Material Gradation, Classification, and Moisture Content
3.13.2 In-Place Densities
3.13.3 Moisture Content

3.13.4 Optimum Moisture and Laboratory Maximum Density
3.13.5 Compaction Control
3.13.6 Tolerance Tests for Subgrades
3.14 SUBGRADE AND EMBANKMENT PROTECTION

-- End of Section Table of Contents --

SECTION 02300

EARTHWORK
12/97

PART 1 GENERAL

1.1 REFERENCES

The publications listed below form a part of this specification to the extent referenced. The publications are referred to in the text by basic designation only.

AMERICAN SOCIETY FOR TESTING AND MATERIALS (ASTM)

ASTM C 136	(1996) Sieve Analysis of Fine and Coarse Aggregates
ASTM D 422	(1963; R 1998) Particle-Size Analysis of Soils
ASTM D 1140	(1997) Amount of Material in Soils Finer than the No. 200 (75-micrometer) Sieve
ASTM D 1556	(2000) Density and Unit Weight of Soil in Place by the Sand-Cone Method
ASTM D 1557	(2000) Laboratory Compaction Characteristics of Soil Using Modified Effort (56,000 ft-lbf/cu. ft. (2,700 kN-m/cu. m.))
ASTM D 2216	(1998) Laboratory Determination of Water (Moisture) Content of Soil, and Rock
ASTM D 2487	(2000) Classification of Soils for Engineering Purposes (Unified Soil Classification System)
ASTM D 4318	(1998) Liquid Limit, Plastic Limit, and Plasticity Index of Soils

1.2 DEFINITIONS

1.2.1 Satisfactory Materials

Satisfactory materials shall comprise any materials classified by ASTM D 2487 as GW, GP, GM, GP-GM, GW-GM, GC, GP-GC, GM-GC, SW, SP, SM, SW-SM, SC, SW-SC, SP-SM, SP-SC, CL, ML, and CL-ML. Satisfactory materials for grading shall be free from roots and other organic matter, trash, debris, frozen material, and stones larger than 3 inches in any dimension.

1.2.2 Unsatisfactory Materials

Materials which do not comply with the requirements for satisfactory materials are unsatisfactory. Unsatisfactory materials also include

man-made fills; trash; refuse; backfills from previous construction; demolition debris; and material classified as satisfactory which contains root and other organic matter or frozen material. The Contracting Officer shall be notified of any contaminated materials.

1.2.3 Cohesionless and Cohesive Materials

Cohesionless materials include materials classified in ASTM D 2487 as GW, GP, SW, and SP. Cohesive materials include materials classified as GC, GP-GC, GM-GC, SC, SW-SC, SP-SC, ML, CL, CL-ML, MH, and CH and the unsatisfactory organic materials Pt, OL, and OH. Materials classified as GM, GP-GM, GW-GM, SM, SW-SM, and SP-SM will be identified as cohesionless only when the fines are nonplastic. Testing required for classifying materials shall be in accordance with ASTM D 4318, ASTM C 136, ASTM D 422, and ASTM D 1140.

1.2.4 Degree of Compaction

Degree of compaction required is expressed as a percentage of the maximum density obtained by the test procedure presented in ASTM D 1557 abbreviated as a percent of laboratory maximum density.

1.2.5 Topsoil

Material suitable for topsoil shall be obtained from required stripping of the project site and/or areas off the installation. Material obtained from off-installation areas suitable for topsoil shall meet the requirements specified for topsoil.

1.3 SUBMITTALS

Government approval is required for submittals with a "G" designation; submittals not having a "G" designation are for information only. When used, a designation following the "G" designation identifies the office that will review the submittal for the Government. The following shall be submitted in accordance with Section 01330 SUBMITTAL PROCEDURES:

SD-05 Design Data

Earthwork.

Notification of encountering rock in the project. Advance notice on the opening of excavation or borrow areas. Advance notice on shoulder construction for rigid pavements.

Earthwork.

Procedure and location for disposal of unused satisfactory material. Blasting plan when blasting is permitted. Proposed source of borrow material.

SD-06 Test Reports

Testing.

Within 24 hours of conclusion of physical tests, three copies of test results.

SD-07 Certificates

Testing; G|RE.

Qualifications of the commercial testing laboratory.

1.4 SUBSURFACE DATA

Logs of soil test borings are shown on the drawings. These data represent the best subsurface information available; however, variations may exist in the subsurface between boring locations. The water level data indicate only the conditions at the particular time or times the information was obtained and may not indicate variations such as those caused by periods of drought or increased rainfall, seasonal fluctuations in rainfall, changes in the surface drainage pattern, or application of irrigation water.

1.5 CLASSIFICATION OF EXCAVATION

No consideration will be given to the nature of the materials, and all excavation will be designated as unclassified excavation.

1.6 BLASTING

Blasting will not be permitted.

1.7 UTILIZATION OF EXCAVATED MATERIALS

Unsatisfactory materials removed from excavations shall be disposed of outside Government-controlled land at the Contractor's responsibility. Satisfactory material removed from excavations shall be used, insofar as practicable, in the construction of fills, embankments, subgrades, shoulders, bedding (as backfill), and for similar purposes. No satisfactory excavated material shall be wasted without specific written authorization. Satisfactory material authorized to be wasted shall be disposed of in designated areas approved for surplus material storage or designated waste areas, as directed. Newly designated waste areas on Government-controlled land shall be cleared and grubbed before disposal of waste material thereon. No excavated material shall be disposed of to obstruct the flow of any stream, endanger a partly finished structure, impair the efficiency or appearance of any structure, or be detrimental to the completed work in any way.

PART 2 PRODUCTS (NOT USED)

PART 3 EXECUTION

3.1 STRIPPING OF TOPSOIL

Within areas to be excavated or to receive fill, topsoil shall be stripped to full depth. Topsoil shall be spread on areas already graded and prepared for topsoil, or transported and deposited in stockpiles convenient to areas that are to receive application of the topsoil later, or at locations indicated or specified. Topsoil shall be kept separate from other excavated materials, brush, litter, objectionable weeds, roots, stones larger than 2 inches in maximum dimension, and other materials that would interfere with planting and maintenance operations. Any surplus of topsoil from excavations and grading shall be removed from the site and disposed of in designated areas approved for surplus material storage or designated waste areas, as directed.

3.2 GENERAL EXCAVATION

The Contractor shall perform excavation of every type of material encountered within the limits of the project to the lines, grades, and elevations indicated and as specified. Grading shall be in conformity with the typical sections shown and the tolerances specified in paragraph FINISHING. Satisfactory excavated materials shall be transported to and placed in fill or embankment within the limits of the work. Unsatisfactory materials encountered within the limits of the work shall be excavated below grade and replaced with satisfactory materials as directed. Such excavated material and the satisfactory material ordered as replacement shall be included in excavation. Surplus satisfactory excavated material not required for fill or embankment shall be disposed of in designated areas approved for surplus material storage or designated waste areas, as directed. Unsatisfactory excavated material shall be disposed of outside Government-controlled land at the Contractor's responsibility. During construction, excavation and fill placement shall be performed in a manner and sequence that will provide proper drainage at all times. Material required for fill or embankment in excess of that produced by excavation within the grading limits shall be excavated from approved areas off the installation as selected by the Contractor.

3.2.1 Ditches, Gutters, and Channel Changes

Excavation of ditches, gutters, and channel changes shall be accomplished by cutting accurately to the cross sections, grades, and elevations shown. Ditches and gutters shall not be excavated below grades shown. Excessive open ditch or gutter excavation shall be backfilled with satisfactory, thoroughly compacted, material to grades shown. Material excavated shall be disposed of as shown or as directed, except that in no case shall material be deposited less than 4 feet from the edge of a ditch. The Contractor shall maintain excavations free from detrimental quantities of leaves, brush, sticks, trash, and other debris until final acceptance of the work.

3.2.2 Drainage Structures

Excavations shall be made to the lines, grades, and elevations shown, or as directed. Trenches and foundation pits shall be of sufficient size to permit the placement and removal of forms for the full length and width of structure footings and foundations as shown. When concrete or masonry is to be placed in an excavated area, the bottom of the excavation shall not be disturbed. Excavation to the final grade level shall not be made until just before the concrete or masonry is to be placed.

3.3 SELECTION OF BORROW MATERIAL

Borrow material shall be selected to meet the requirements and conditions of the particular fill or embankment for which it is to be used. Borrow material shall be obtained from approved private sources, selected by the Contractor. Unless otherwise provided in the contract, the Contractor shall obtain from the owners the right to procure material, pay royalties and other charges involved, and bear the expense of developing the sources, including rights-of-way for hauling. Unless specifically provided, no borrow shall be obtained within the limits of the project site without prior written approval. Necessary clearing, grubbing, and satisfactory drainage of borrow pits and the disposal of debris thereon shall be considered related operations to the borrow excavation.

3.4 OPENING AND DRAINAGE OF EXCAVATION AND BORROW PITS

Except as otherwise permitted, borrow pits and other excavation areas shall be excavated providing adequate drainage. Overburden and other spoil material shall be transported to designated spoil areas. Borrow pits shall be neatly trimmed and drained after the excavation is completed. The Contractor shall ensure that excavation of any area, operation of borrow pits, or dumping of spoil material results in minimum detrimental effects on natural environmental conditions.

3.5 GRADING AREAS

Where indicated, work will be divided into grading areas within which satisfactory excavated material shall be placed in embankments, fills, and required backfills. The Contractor shall not haul satisfactory material excavated in one grading area to another grading area except when so directed in writing.

3.6 BACKFILL

Backfill adjacent to any and all types of structures shall be placed and compacted to at least 90 percent laboratory maximum density to prevent wedging action or eccentric loading upon or against the structure. Ground surface on which backfill is to be placed shall be prepared as specified in paragraph PREPARATION OF GROUND SURFACE FOR EMBANKMENTS. Moisture content, placement and compaction requirements for backfill materials shall also conform to the applicable portions of paragraphs PREPARATION OF GROUND SURFACE FOR EMBANKMENTS, EMBANKMENTS, and SUBGRADE PREPARATION, and Section 02630A STORM-DRAINAGE SYSTEM; and Section 02316 EXCAVATION, TRENCHING, AND BACKFILLING FOR UTILITIES SYSTEMS. Compaction shall be accomplished by sheepsfoot rollers, pneumatic-tired rollers, steel-wheeled rollers, vibratory compactors, or other approved equipment.

3.7 PREPARATION OF GROUND SURFACE FOR EMBANKMENTS

3.7.1 General Requirements

Ground surface on which fill is to be placed shall be stripped of live, dead, or decayed vegetation, rubbish, debris, and other unsatisfactory material; plowed, disked, or otherwise broken up to a depth of 8 inches; pulverized; moistened or aerated as necessary to plus or minus 2.5 percent of optimum moisture; thoroughly mixed; and compacted to at least 90 percent laboratory maximum density. Compaction shall be accomplished by sheepsfoot rollers, pneumatic-tired rollers, steel-wheeled rollers, vibratory compactors, or other approved equipment. The prepared ground surface shall be scarified and moistened or aerated as required just prior to placement of embankment materials to assure adequate bond between embankment material and the prepared ground surface.

3.7.2 Frozen Material

Embankment shall not be placed on a foundation which contains frozen material, or which has been subjected to freeze-thaw action. This prohibition encompasses all foundation types, including the natural ground, all prepared subgrades (whether in an excavation or on an embankment) and all layers of previously placed and compacted earth fill which become the foundations for successive layers of earthfill. All material that freezes or has been subjected to freeze-thaw action during the construction work, or during periods of temporary shutdowns, such as, but not limited to,

nights, holidays, weekends, winter shutdowns, or earthwork operations, shall be removed to a depth that is acceptable to the Contracting Officer and replaced with new material. Alternatively, the material shall be thawed, dried, reworked, and recompacted to the specified criteria before additional material is placed. The Contracting Officer will determine when placement of fill shall cease due to cold weather. The Contracting Officer may elect to use average daily air temperatures, and/or physical observation of the soils for his determination. Embankment material shall not contain frozen clumps of soil, snow, or ice.

3.8 EMBANKMENTS

3.8.1 Earth Embankments

Earth embankments shall be constructed from satisfactory materials free of organic or frozen material and rocks with any dimension greater than 3 inches. The material shall be placed in successive horizontal layers of loose material not more than 8 inches in depth. Each layer shall be spread uniformly on a soil surface that has been moistened or aerated as necessary, and scarified or otherwise broken up so that the fill will bond with the surface on which it is placed. After spreading, each layer shall be plowed, disked, or otherwise broken up; moistened or aerated as necessary; thoroughly mixed; and compacted to at least 90 percent laboratory maximum density. Compaction requirements for the upper portion of earth embankments forming subgrade for pavements shall be identical with those requirements specified in paragraph SUBGRADE PREPARATION. Compaction shall be accomplished by sheepsfoot rollers, pneumatic-tired rollers, steel-wheeled rollers, vibratory compactors, or other approved equipment.

3.8.2 Moisture Content

Satisfactory materials in each layer of fill shall contain the amount of moisture within the limits specified below. Materials that are not within the specified limits after compaction shall be reworked regardless of density. The moisture content after compaction shall be as uniform as practicable throughout any one layer and shall be within the limits of 2.5 percentage points above optimum moisture content and 2.5 percentage points below optimum moisture content. Materials which are too wet shall be disced, harrowed, plowed, bladed, or otherwise manipulated to reduce the moisture content to within the specified limits. Materials which are too dry shall be broken up, sprinkled, and thoroughly mixed to bring the moisture content uniformly up to within specified limits. In the event that materials reach the fill which are not within the limits of moisture content specified above, the Contractor shall either adjust the moisture content to bring it within the specified limits or remove it from the fill.

3.9 SUBGRADE PREPARATION

3.9.1 Construction

Subgrade shall be shaped to line, grade, and cross section, and compacted as specified. This operation shall include plowing, disking, and any moistening or aerating required to obtain specified compaction. Materials shall be moistened or aerated as necessary to plus or minus 2.0 percent of optimum moisture. Soft or otherwise unsatisfactory material shall be removed and replaced with satisfactory excavated material or other approved material as directed. Low areas resulting from removal of unsatisfactory material shall be brought up to required grade with satisfactory materials, and the entire subgrade shall be shaped to line, grade, and cross section

and compacted as specified. When the subgrade is in cut, the top 8 inches of subgrade shall be scarified, windrowed, moistened or aerated as necessary to plus or minus 2.0 percent of optimum moisture, thoroughly blended, reshaped, and compacted. The elevation of the finish subgrade shall not vary more than 0.05 foot from the established grade and cross section.

3.9.2 Moisture Content

Satisfactory materials in the subgrade shall contain the amount of moisture within the limits specified below. Materials that are not within the specified limits after compaction shall be reworked regardless of density. The moisture content after compaction shall be as uniform as practicable throughout the subgrade and shall be within the limits of 2.5 percentage points above optimum moisture content and 2.5 percentage points below optimum moisture content. Materials which are too wet shall be disced, harrowed, plowed, bladed, or otherwise manipulated to reduce the moisture content to within the specified limits. Materials which are too dry shall be broken up, sprinkled, and thoroughly mixed to bring the moisture content uniformly up to within specified limits.

3.9.3 Compaction

Compaction shall be accomplished by sheepsfoot rollers, pneumatic-tired rollers, steel-wheeled rollers, vibratory compactors, or other approved equipment.

3.9.3.1 Subgrade for Pavements

Subgrade for pavements shall be compacted to at least 95 percent laboratory maximum density for a depth below the subgrade of 12 inches in fill or backfill and 6 inches in undisturbed native soil or cut.

3.9.3.2 Subgrade for Shoulders

Subgrade for shoulders shall be compacted to at least 95 percent laboratory maximum density for a depth of 6 inches below finish grade. In areas where the shoulder is to be grassed the top 6 inches shall be compacted to a density of at least 90 percent laboratory maximum density.

3.10 SHOULDER CONSTRUCTION

Shoulders shall be constructed of satisfactory excavated or borrow material or as otherwise shown or specified. Shoulders shall be constructed as soon as possible after adjacent paving is complete, but in the case of rigid pavements, shoulders shall not be constructed until permission of the Contracting Officer has been obtained. The entire shoulder area shall be compacted to at least the percentage of maximum density as specified in paragraph SUBGRADE PREPARATION above. Compaction shall be accomplished by sheepsfoot rollers, pneumatic-tired rollers, steel-wheeled rollers, vibratory compactors, or other approved equipment. Shoulder construction shall be done in proper sequence in such a manner that adjacent ditches will be drained effectively and that no damage of any kind is done to the adjacent completed pavement. The completed shoulders shall be true to alignment and grade and shaped to drain in conformity with the cross section shown.

3.11 FINISHING

The surface of excavations, embankments, and subgrades shall be finished to a smooth and compact surface in accordance with the lines, grades, and cross sections or elevations shown. The degree of finish for graded areas shall be within 0.1 foot of the grades and elevations indicated except that the degree of finish for subgrades shall be specified in paragraph SUBGRADE PREPARATION. Gutters and ditches shall be finished in a manner that will result in effective drainage. The surface of areas to be turfed shall be finished to a smoothness suitable for the application of turfing materials.

3.12 PLACING TOPSOIL

On areas to receive topsoil, the surface shall be free of materials that would hinder planting or maintenance operations. The compacted subgrade soil shall be scarified to a depth of 2 inches by disking or plowing for the bonding of topsoil with the subsoil. Topsoil shall then be uniformly spread to a thickness of 4 inches, and graded to the elevations and slopes shown and left free of surface irregularities. Topsoil shall be compacted by one pass of a cultipacker, roller, or other approved equipment weighing 100 to 160 pounds per linear foot of roller. Topsoil shall not be placed when the subgrade is frozen, excessively wet, extremely dry, or in a condition otherwise detrimental to seeding, planting, or proper grading.

3.13 TESTING

Testing shall be performed by an approved commercial testing laboratory. Field in-place density shall be determined in accordance with ASTM D 1556. When test results indicate, as determined by the Contracting Officer, that compaction is not as specified, the material shall be removed, replaced and recompacted to meet specification requirements. Tests on recompacted areas shall be performed to determine conformance with specification requirements. Inspections and test results shall be certified by a registered professional civil engineer. These certifications shall state that the tests and observations were performed by or under the direct supervision of the engineer and that the results are representative of the materials or conditions being certified by the tests. The following number of tests, if performed at the appropriate time, will be the minimum acceptable for each type operation.

3.13.1 Fill and Backfill Material Gradation, Classification, and Moisture Content

One test per 250 cubic yards stockpiled or in-place source material. Gradation of fill and backfill material shall be determined in accordance with ASTM D 422 and ASTM D 1140 (wash No. 200, without hydrometer). Liquid limit and plasticity index shall be determined in accordance with ASTM D 4318. Classification of soils shall be in accordance with ASTM D 2487. Moisture content shall be determined in accordance with ASTM D 2216.

3.13.2 In-Place Densities

a. One test per 5000 square feet, or fraction thereof, of each lift of fill or backfill areas compacted by other than hand-operated machines.

b. One test per 250 square feet, or fraction thereof, of each lift of fill or backfill areas compacted by hand-operated machines.

c. One test per 4000 square feet, or fraction thereof, of subgrade in undisturbed native soil or cut, and under paved areas (excluding roads).

d. One test per 100 linear feet, or fraction thereof, of subgrade in roads.

3.13.3 Moisture Content

In the stockpile(s), excavation, or borrow areas, a minimum of two tests, with one-point or two-point compaction tests, as appropriate, shall be performed per day per type of material or source of material being placed during stable weather conditions. During unstable weather, tests shall be made as dictated by local conditions to ensure the moisture content of the placed materials are within the specified limits.

3.13.4 Optimum Moisture and Laboratory Maximum Density

Tests shall be made for each type material or source of material including borrow material to determine the optimum moisture and laboratory maximum density values. Test procedures and frequency shall be as specified in paragraph TESTING of Section 02315 EXCAVATION, FILLING AND BACKFILLING FOR BUILDINGS.

3.13.5 Compaction Control

The tests required on materials prior to placement and the compaction control procedures and methods specified in Section 02315 EXCAVATION, FILLING AND BACKFILLING FOR BUILDINGS, paragraph TESTING (with exception of paragraph Tests Required During Placement) in regard to compaction control of soils, and utilizing the one-point or two-point compaction methods to relate field density data to laboratory test values, shall fully apply to and be considered a part of this specification section.

3.13.6 Tolerance Tests for Subgrades

Continuous checks on the degree of finish specified in paragraph SUBGRADE PREPARATION shall be made during construction of the subgrades.

3.14 SUBGRADE AND EMBANKMENT PROTECTION

During construction, embankments and excavations shall be kept shaped and drained. Ditches and drains along subgrade shall be maintained to drain effectively at all times. The finished subgrade shall not be disturbed by traffic or other operation and shall be protected and maintained by the Contractor in a satisfactory condition until ballast, subbase, base, or pavement is placed. The storage or stockpiling of materials on the finished subgrade will not be permitted. No subbase, base course, ballast, or pavement shall be laid until the subgrade has been checked and approved, and in no case shall subbase, base, surfacing, pavement, or ballast be placed on a muddy, spongy, or frozen subgrade.

-- End of Section --

SECTION TABLE OF CONTENTS

DIVISION 02 - SITE CONSTRUCTION

SECTION 02315

EXCAVATION, FILLING AND BACKFILLING FOR BUILDINGS

08/98

PART 1 GENERAL

1.1 REFERENCES
1.2 DEFINITIONS
1.2.1 Degree of Compaction
1.2.2 Maximum Dry Density
1.2.3 Optimum Moisture Content
1.2.4 Subsurface Data
1.2.5 Related Work
1.2.5.1 Site Grading and Excavation and Backfilling for Utilities
1.2.5.2 Termite Protection
1.3 SUBMITTALS

PART 2 PRODUCTS

2.1 MATERIALS
2.1.1 Satisfactory Materials
2.1.1.1 Natural Insitu Soil
2.1.1.2 Foundation Fill or Backfill
2.1.1.3 Fill or Backfill Adjacent to Walls
2.1.2 Unsatisfactory Materials
2.1.2.1 Natural Insitu Soil
2.1.2.2 Foundation Fill or Backfill
2.1.2.3 Fill or Backfill Adjacent to Walls
2.1.2.4 Wet or Soft Materials
2.1.3 Cohesionless and Cohesive Materials
2.2 CAPILLARY WATER BARRIER

PART 3 EXECUTION

3.1 TOPSOIL
3.2 EXCAVATION
3.3 DRAINAGE AND DEWATERING
3.3.1 Drainage
3.3.2 Dewatering
3.4 SHORING
3.5 CLASSIFICATION OF EXCAVATION
3.6 BLASTING
3.7 UTILITY AND DRAIN TRENCHES
3.8 BORROW
3.9 EXCAVATED MATERIALS
3.10 FINAL GRADE OF SURFACES TO SUPPORT CONCRETE
3.11 SUBGRADE PREPARATION
3.12 FILLING AND BACKFILLING
3.12.1 General
3.12.2 Placement
3.12.3 Moisture Content
3.12.4 Compaction

3.13 TESTING
3.13.1 Types of Tests
3.13.1.1 Classification Tests
3.13.1.2 Moisture Content
3.13.1.3 Compaction Tests
3.13.1.4 Field Density Tests
3.13.2 Tests Required on Material Prior to Placement
3.13.2.1 General
3.13.2.2 Classification Tests
3.13.2.3 Compaction Tests
3.13.2.4 Moisture Content Tests
3.13.3 Tests Required During Placement
3.13.3.1 Field Density Tests
3.13.3.2 Moisture Content
3.13.3.3 Optimum Moisture and Laboratory Maximum Density
3.13.3.4 Time and Location of Tests
3.13.3.5 Field Density Control
3.13.4 Compaction Control
3.13.5 Compaction Procedure
3.13.5.1 General
3.13.5.2 One-Point Compaction Method
3.13.5.3 Two-Point Compaction Method
3.14 CAPILLARY WATER BARRIER
3.15 GRADING
3.16 SPREADING TOPSOIL
3.17 PROTECTION

-- End of Section Table of Contents --

SECTION 02315

EXCAVATION, FILLING AND BACKFILLING FOR BUILDINGS
08/98

PART 1 GENERAL

1.1 REFERENCES

The publications listed below form a part of this specification to the extent referenced. The publications are referred to in the text by basic designation only.

AMERICAN SOCIETY FOR TESTING AND MATERIALS (ASTM)

ASTM C 33	(2001a) Concrete Aggregates
ASTM D 422	(1963; R 1998) Particle-Size Analysis of Soils
ASTM D 1140	(2000) Amount of Material in Soils Finer Than the No. 200 (75-Micrometer) Sieve
ASTM D 1556	(2000) Density and Unit Weight of Soil in Place by the Sand-Cone Method
ASTM D 1557	(2000) Laboratory Compaction Characteristics of Soil Using Modified Effort (56,000 ft-lbf/cu. ft. (2,700 kN-m/cu.m.))
ASTM D 2216	(1998) Laboratory Determination of Water (Moisture) Content of Soil and Rock by Mass
ASTM D 2487	(2000) Classification of Soils for Engineering Purposes (Unified Soil Classification System)
ASTM D 4318	(2000) Liquid Limit, Plastic Limit, and Plasticity Index of Soils

1.2 DEFINITIONS

1.2.1 Degree of Compaction

Degree of compaction is expressed as a percentage of the maximum density obtained by the test procedure presented in ASTM D 1557 abbreviated as percent laboratory maximum density.

1.2.2 Maximum Dry Density

The maximum dry density is expressed as the maximum density obtained when the soil is compacted in accordance with ASTM D 1557, abbreviated as laboratory maximum dry density.

1.2.3 Optimum Moisture Content

The optimum moisture content is the moisture content corresponding to the maximum dry density obtained by the test procedure presented in ASTM D 1557.

1.2.4 Subsurface Data

Logs of soil test borings and soil test data are shown on the drawings. These data represent the best subsurface information available; however, variations may exist in the subsurface between boring locations. The water level data indicate only the conditions at the particular time or times the information was obtained and may not indicate variations such as those caused by periods of drought or increased rainfall, seasonal fluctuations in rainfall, changes in the surface drainage pattern, or application of irrigation water.

1.2.5 Related Work

1.2.5.1 Site Grading and Excavation and Backfilling for Utilities

Site grading and excavation and backfilling for utilities beyond the 5-foot building line are covered under Section 02300 EARTHWORK and Section 02316 EXCAVATION, TRENCHING, AND BACKFILLING FOR UTILITIES SYSTEMS.

1.2.5.2 Termite Protection

Termite protection is specified under Section 02364 TERMITICIDE TREATMENT MEASURES FOR SUBTERRANEAN TERMITE CONTROL.

1.3 SUBMITTALS

Government approval is required for submittals with a "G" designation; submittals not having a "G" designation are for information only. The following shall be submitted in accordance with Section 01330 SUBMITTAL PROCEDURES:

SD-06 Test Reports

Field Density Tests
Testing of Fill and Backfill Materials

Copies of all laboratory and field test reports within 24 hours of the completion of the test. Each report shall be properly identified. Test methods used and compliance with specified test standards shall be described. Summary sheets specified herein shall be submitted as indicated.

Inspection, Equipment and Corrective Action Reports;

Copies of inspection reports, equipment specifications, and records of corrective action taken shall be submitted.

SD-07 Certificates

Certificates of Compliance

Certificates of compliance indicating conformance with specified requirements shall be furnished for capillary water barrier materials.

Testing; G, RO.

Testing facilities for the performance of laboratory soil tests must be approved by the Contracting Officer prior to work being performed.

PART 2 PRODUCTS

2.1 MATERIALS

2.1.1 Satisfactory Materials

2.1.1.1 Natural Insitu Soil

Satisfactory materials for natural insitu soil supporting building foundations and/or slabs shall be limited to materials classified in ASTM D 2487 as GW, GP, GM, GP-GM, GW-GM, GC, GP-GC, GM-GC, SW, SP, SM, SW-SM, SC,SW-SC, SP-SM, SP-SC, CL, ML, CL-ML, CH, MH, and shall be free of trash, debris, roots or other organic matter, frozen material, and stones larger than 3 inches in any dimension.

2.1.1.2 Foundation Fill or Backfill

Satisfactory material for fill or backfill supporting building foundations and/or slabs shall be limited to materials classified in ASTM D 2487 as GW, GP, GM, GP-GM, GW-GM, GC, GP-GC, GM-GC, SW, SP, SM, SW-SM, SC,SW-SC, SP-SM, SP-SC, CL, ML, CL-ML, and shall be free of trash, debris, roots or other organic matter, frozen material, and stones larger than 3 inches in any dimension.

2.1.1.3 Fill or Backfill Adjacent to Walls

Satisfactory materials for fill or backfill adjacent to walls shall be limited to cohesionless, free draining materials classified in ASTM D 2487 as GW, GP, GM, SW, SP, SM, and SP-SM, and shall be free of trash, debris, roots or other organic matter, frozen material, and stones larger than 3 inches in any dimension.

2.1.2 Unsatisfactory Materials

2.1.2.1 Natural Insitu Soil

Unsatisfactory materials for fill or backfill supporting building foundations and/or slabs shall be materials classified in ASTM D 2487 as Pt, OH and OL and any other materials not defined as satisfactory. The Contracting Officer shall be notified of any contaminated materials.

2.1.2.2 Foundation Fill or Backfill

Unsatisfactory material for fill or backfill supporting building foundations and/or slabs shall be materials classified in ASTM D 2487 as Pt, OH, OL, CH and MH.

2.1.2.3 Fill or Backfill Adjacent to Walls

Unsatisfactory materials for fill or backfill adjacent to walls shall be materials classified in accordance with ASTM D 2487 as Pt, OH, OL, GC, SC, CL, CH, ML and MH, GP-GM, GW-GM, GC, GP-GC, GM-GC, SW-SM, SC, SW-SC, SP-SC, CL, ML, CL-ML.

2.1.2.4 Wet or Soft Materials

Materials determined by the Contracting Officer as too wet or too soft to provide a stable subgrade, foundation, or fill will be classified as unsatisfactory regardless of classification. However, if such materials do meet the appropriate ASTM D 2487 classification, the Contractor shall at no additional cost to the Government, recondition the materials.

2.1.3 Cohesionless and Cohesive Materials

Cohesionless materials include materials classified in ASTM D 2487 as GW, GP, SW, and SP. Cohesive materials include materials classified as GC,GP-GC, GM-GC, SW-SC, SP-SC, SC, ML, CL, CL-ML, MH, and CH and the unsatisfactory organic materials Pt, OL and OH. Materials classified as GM, GP-GM, GW-GM, SM, SW-SM, and SP-SM will be identified as cohesionless only when the fines have a plasticity index of zero; otherwise they will be considered cohesive.

2.2 CAPILLARY WATER BARRIER

Capillary water barrier shall consist of clean, crushed, nonporous stone, crushed gravel, or uncrushed gravel conforming to the requirements of ASTM C 33 for coarse aggregate grading size 57, 67, 7, or 78.

PART 3 EXECUTION

3.1 TOPSOIL

Topsoil shall be stripped to full depth below existing grade within the designated excavations and grading lines. Topsoil shall be spread on areas already graded and prepared for topsoil, or transported and deposited in stockpiles convenient to areas that are to receive topsoil later, or at locations indicated or specified. Excess topsoil shall be disposed of as specified for excess excavated material.

3.2 EXCAVATION

Excavation shall conform to the dimensions and elevations indicated for each building, structure, and footing except as specified, and shall include trenching for utility and foundation drainage systems to a point 5 feet beyond the building line of each building and structure, excavation for outside grease interceptors and all work incidental thereof. Excavation shall extend a sufficient distance from walls and footings to allow for placing and removal of forms. Excavations below indicated depths will not be permitted except to remove unsatisfactory material. Unsatisfactory material encountered below the grades shown shall be removed as directed and replaced with satisfactory material; and payment will be made in conformance with the CHANGES clause of the CONTRACT CLAUSES. Satisfactory material removed below the depths indicated, without specific direction of the Contracting Officer, shall be replaced, at no additional cost to the Government, with satisfactory materials to the indicated excavation grade. Satisfactory material shall be placed and compacted as specified in paragraph FILLING AND BACKFILLING. Determination of elevations and measurements of approved overdepth excavation of unsatisfactory material below grades indicated shall be done under the direction of the Contracting Officer.

3.3 DRAINAGE AND DEWATERING

3.3.1 Drainage

Surface water shall be directed away from excavation and construction sites to prevent erosion and undermining of foundations. Diversion ditches, dikes and grading shall be provided and maintained as necessary during construction. Excavated slopes and backfill surfaces shall be protected to prevent erosion and sloughing. Excavation shall be performed so that the site, the area immediately surrounding the site, and the area affecting operations at the site shall be continually and effectively drained.

3.3.2 Dewatering

Groundwater flowing toward or into excavations shall be controlled to prevent sloughing of excavation slopes and walls, boils, uplift and heave in the excavation and to eliminate interference with orderly progress of construction. French drains, sumps, ditches or trenches will not be permitted within 3 feet of the foundation of any structure, except with specific written approval, and after specific contractual provisions for restoration of the foundation area have been made. Control measures shall be taken by the time the excavation reaches the water level in order to maintain the integrity of the in situ material. While the excavation is open, the water level shall be maintained continuously, at least 2 feet below the working level. The Contractor shall provide drainage and dewatering as required to ensure that all footing excavations are accomplished with the subgrade soils remaining dry and firm until after the footings are placed and backfilled.

3.4 SHORING

Shoring, including sheet piling, shall be furnished and installed as necessary to protect workmen, banks, adjacent paving, structures, and utilities. Shoring, bracing, and sheeting shall be removed as excavations are backfilled, in a manner to prevent caving.

3.5 CLASSIFICATION OF EXCAVATION

Excavation will be unclassified regardless of the nature of material encountered.

3.6 BLASTING

Blasting will not be permitted.

3.7 UTILITY AND DRAIN TRENCHES

Trenches for underground utilities systems and drain lines shall be excavated to the required alignments and depths. The bottoms of trenches shall be graded to secure the required slope and shall be tamped if necessary to provide a firm pipe bed. Recesses shall be excavated to accommodate bells and joints so that pipe will be uniformly supported for the entire length.

3.8 BORROW

Where satisfactory materials are not available in sufficient quantity from required excavations, approved materials shall be obtained as specified in Section 02300 EARTHWORK.

3.9 EXCAVATED MATERIALS

Satisfactory excavated material required for fill or backfill shall be placed in the proper section of the permanent work required under this section or shall be separately stockpiled if it cannot be readily placed. Satisfactory material in excess of that required for the permanent work and all unsatisfactory material shall be disposed of as specified in Section 02300 EARTHWORK. No satisfactory material shall be wasted or used for the convenience of the Contractor unless so authorized. Stockpiles and wasted materials shall be placed, graded, and shaped for proper drainage, giving due consideration to drainage from adjacent properties.

3.10 FINAL GRADE OF SURFACES TO SUPPORT CONCRETE

Excavation to final grade shall not be made until just before the capillary water barrier or concrete is to be placed. All surfaces shall be protected from erosion resulting from ponding or flow of water.

3.11 SUBGRADE PREPARATION

Unsatisfactory material in surfaces to receive fill or in excavated areas shall be removed and replaced with satisfactory materials as directed by the Contracting Officer. The surface shall be scarified to a depth of 6 inches before the fill is started. Sloped surfaces steeper than 1 vertical to 4 horizontal shall be plowed, stepped, benched, or broken up so that the fill material will bond with the existing material. When subgrades are less than the specified density, the ground surface shall be broken up to a minimum depth of 6 inches, pulverized, and compacted to the specified density. When the subgrade is part fill and part excavation or natural ground, the excavated or natural ground portion shall be scarified to a depth of 12 inches and compacted as specified for the adjacent fill. Material shall not be placed on surfaces that are muddy, frozen, or contain frost. Compaction shall be accomplished by sheepsfoot rollers, pneumatic-tired rollers, steel-wheeled rollers, or other approved equipment well suited to the soil being compacted. Material shall be moistened or aerated as necessary to plus or minus 2.5 percent of optimum moisture. Minimum subgrade density shall be as specified in paragraph FILLING AND BACKFILLING.

3.12 FILLING AND BACKFILLING

3.12.1 General

Filling and backfilling shall not begin until construction below finish grade has been approved, underground utilities systems have been inspected, tested and approved, forms removed and the excavation cleaned of trash and debris. Backfill shall not be placed in areas that are wet, muddy, contain organic materials or are otherwise unacceptable to the Contracting Officer. Satisfactory materials shall be used in bringing fills and backfills to the lines and grades indicated and for replacing unsatisfactory materials. Satisfactory material shall be free from roots and other organic matter, trash, debris, frozen materials, and stones larger than 3 inches in any dimension. Where pipe and or utility lines are coated or wrapped for protection against corrosion, the backfill material up to an elevation of 2 feet above sewer lines and 1 foot above other utility lines shall be free from stones larger than 2 inches in any dimension.

3.12.2 Placement

Satisfactory materials shall be placed in horizontal layers not exceeding 8 inches in loose thickness, or 4 inches in loose thickness where hand-operated compactors are used. After placing, each layer shall be plowed, disked, or otherwise broken up, moistened or aerated as necessary, thoroughly mixed and compacted as specified. Backfill shall be brought to the indicated finish grade. Heavy equipment for spreading and compacting backfill shall not be operated closer to foundation or retaining walls than a distance equal to the height of backfill above the top of footing; the area remaining shall be compacted in layers not more than 4 inches in loose thickness with power-driven hand tampers suitable for the material being compacted. Backfill shall be placed carefully around pipes or tanks to avoid damage to coatings, wrappings, or tanks. Backfill shall not be placed against foundation walls prior to 7 days after completion of each side of the wall and sloped to drain away from the wall. Prior to compaction, each layer shall be thoroughly and uniformly blended throughout its entire thickness by discing.

3.12.3 Moisture Content

Satisfactory materials in each layer of fill or backfill shall contain the amount of moisture within the limits specified below. Materials that are not within the specified limits after compaction shall be reworked regardless of density. The moisture content after compaction shall be as uniform as practicable throughout any one layer and shall be within the limits of 2.5 percentage points above optimum moisture content and 2.5 percentage points below optimum moisture content. Materials which are too wet shall be disced, harrowed, plowed, bladed, or otherwise manipulated to reduce the moisture content to within the specified limits. Materials which are too dry shall be broken up, sprinkled, and thoroughly mixed to bring the moisture content uniformly up to within specified limits. In the event that materials reach the fill which are not within the limits of moisture content specified above, the Contractor shall either adjust the moisture content to bring it within the specified limits or remove it from the fill.

3.12.4 Compaction

Compaction shall be accomplished by sheepsfoot roller, pneumatic-tired rollers, smooth-drum vibratory rollers or other approved equipment well suited to the soil being compacted. Generally, sheepsfoot rollers are best suited for compacting cohesive material while smooth-drum vibratory rollers are best suited for compacting cohesionless materials. In areas inaccessible to heavy equipment, or where in the opinion of the Contracting Officer, use of heavy equipment may cause damage to pipes, conduits, or structures, approved power-driven hand tampers suitable for the material being compacted shall be used. Each layer of fill and backfill shall be compacted to not less than the percentage of maximum density specified below.

	Percent Laboratory Maximum Density
Fill, Embankment, and Backfill	
Under structures, building slabs, steps,	

	Percent Laboratory Maximum Density
paved areas, and in trenches	90
Beside structures, footings, and walls	90
Under sidewalks and grassed areas	85
Subgrade (Top of Fill, Embankment, and Backfill)	
Under building slabs, steps, and paved areas, top 12 inches	90
Under footings, top 12 inches	90
Under sidewalks and grassed areas, top 6 inches	85
Subgrade (Undisturbed Native Soil or Cut)	
Under building slabs, steps, and paved areas, top 8 inches	90
Under footings, top 8 inches	90
Under sidewalks and grassed areas, top 6 inches	85

Approved compacted subgrades that are disturbed by the Contractor's operations or adverse weather shall be scarified and recompacted to the required density prior to further construction thereon. Recompaction over underground utilities and heating lines shall be by hand tamping. For compacted subgrades and/or any lift of fill or backfill that fails to meet the specified density and/or moisture requirements, the entire subgrade and/or entire lift of fill shall be broken up to a minimum depth of 8 inches, pulverized, the moisture content adjusted as necessary, and recompacted to the specified density, even if this action requires the removal and replacement of subsequently placed satisfactory lifts of fill. Tests on recompacted areas shall be performed to determine conformance with specification requirements. Lifts of fill placed without being field density tested will not be accepted as satisfactory under any circumstances.

3.13 TESTING

Testing shall be the responsibility of the Contractor and shall be performed by an approved commercial testing laboratory at no additional cost to the Government. Three copies of test results shall be included with the Contractor's daily construction quality control reports. Inspections and test results shall be certified by a registered professional civil engineer. These certifications shall state that the tests and observations were performed by or under the direct supervision of the engineer and that the results are representative of the materials or conditions being certified by the tests.

3.13.1 Types of Tests

3.13.1.1 Classification Tests

Classification of soils shall be determined in accordance with ASTM D 2487.

a. Liquid Limit and Plasticity Index: Liquid limit and plasticity index shall be determined in accordance with ASTM D 4318.

b. Sieve Analysis: Sieve analysis (wash No. 200, without hydrometer) shall be performed in accordance with ASTM D 422 and ASTM D 1140.

3.13.1.2 Moisture Content

Moisture content shall be determined in accordance with ASTM D 2216.

3.13.1.3 Compaction Tests

Compaction tests shall be performed by the test procedure presented in ASTM D 1557. Adequate testing shall be conducted to establish at least five points with at least one point falling within plus or minus 1.5 percentage points of the plotted optimum moisture content.

3.13.1.4 Field Density Tests

Field in-place densities shall be determined by the sand displacement method in accordance with ASTM D 1556. The Contracting Officer reserves the right to direct the locations where field density tests are to be performed. SAS Form 865 shall be used for recording results of field density tests and submitted with the daily construction quality control reports. Results of density tests shall be maintained on CESAS Form 1177 - Summary of Field Density Tests and an updated copy submitted each week. The Contracting Officer will furnish Government forms to the Contractor.

3.13.2 Tests Required on Material Prior to Placement

3.13.2.1 General

All material from required excavations and borrow shall be tested prior to incorporation into the permanent work. The tests shall be performed on samples representative of the various materials to be utilized. Samples shall be carefully selected to represent the full range of materials to be used as fill and/or backfill. The following minimum number of tests shall be performed on the materials prior to the placement of the materials in the work. Additional tests of these types shall be performed when materials of different classification or compaction characteristics are encountered to determine the properties of the materials. The Contracting Officer reserves the right to direct additional testing as required.

3.13.2.2 Classification Tests

Classification tests shall be performed to determine the acceptability of materials in accordance with paragraph MATERIALS. Such tests on materials proposed for use as fill and/or backfill shall be performed prior to their use. Sufficient classification tests shall be performed to define the full range of all materials proposed for use. A minimum of two classification tests shall be performed on each material classified as satisfactory for use. The Contracting Officer may at any time require additional classification tests to confirm material acceptability.

3.13.2.3 Compaction Tests

Compaction tests shall be performed prior to commencement of construction in order to determine the moisture-density relationships of all satisfactory materials proposed for use as fill and/or backfill. For each compaction test performed, an associated or companion classification test and moisture content test shall be performed. Compaction tests shall be performed in sufficient number to establish the full range of maximum dry density and optimum water content. A minimum of 8 compaction tests shall be performed on materials classified as satisfactory for use. Samples for these tests shall not be obtained from the same locations. The Contracting Officer reserves the right to direct where samples for additional compaction tests are obtained. In the event that the compaction characteristics of materials having the same classification vary appreciably, additional compaction tests shall be performed.

3.13.2.4 Moisture Content Tests

Moisture content tests shall be performed on all materials proposed for use as fill and/or backfill to determine their suitability for use in accordance with paragraph Moisture Content. Moisture content tests shall be performed in sufficient number to determine the full range of moisture contents. Moisture content test shall be performed for each compaction test and as required to determine acceptability of material prior to placement. Not less than two moisture content tests shall be performed on each material classified as satisfactory for use.

3.13.3 Tests Required During Placement

3.13.3.1 Field Density Tests

Acceptance of the compacted materials shall be determined by the results of field in-place density tests. Density tests in randomly selected locations shall be performed in the material and at the minimum frequency specified below:

Material Type	Location of Material	Minimum Test Frequency
Fill, embankment and backfill	Beneath structures, to the 5-foot building line	One test per lift per each increment or fraction of 4000 square feet
Fill and backfill	Areas beside structures, footings, walls, and areas enclosed by grade beams that are compacted by hand operated compaction equipment	One test per foot of depth per each increment or fraction of 200 square feet, or for each 50 linear feet of long narrow (less than 3 feet wide) fills 50 linear feet or more in length

Material Type	Location of Material	Minimum Test Frequency
Subgrade	Under building slabs on grade and paved areas	One test per each increment or fraction of 2500 square feet
Subgrade	Under footings	One test per every fifth column footing and for each increment or fraction of 75 linear feet of wall footings

3.13.3.2 Moisture Content

In the stockpile(s), excavation, or borrow areas, a minimum of two tests, each with a one-point or two-point compaction test, shall be performed per day per type of material or source of material being placed during stable weather conditions. During unstable weather, tests shall be made as dictated by the local conditions to ensure the moisture content of the placed materials are within the specified limits.

3.13.3.3 Optimum Moisture and Laboratory Maximum Density

One representative test shall be performed per 250 cubic yards of fill, embankment and backfill, or when any change in material occurs which may affect the optimum moisture content or laboratory maximum density.

3.13.3.4 Time and Location of Tests

The Government reserves the right to specify the location of any test. Whenever there is doubt as to the adequacy of the testing or validity of results, the Contracting Officer may direct that additional tests be performed, at no additional cost to the Government. The field density tests shall be performed at times and locations which will assure the specified compaction is being obtained throughout each lift for all materials placed. Additional field density tests shall be performed in areas where the Contracting Officer determines there is reason to doubt the adequacy of the natural subgrade.

3.13.3.5 Field Density Control

The results of field density tests shall be compared to results of compaction tests performed as required elsewhere in these specifications by the use of the appropriate procedures described in the following paragraphs.

3.13.4 Compaction Control

For fine grained (clayey and silty) soils and for sands with appreciable fines such that normal shaped compaction curves are obtained, results of all compaction tests shall be plotted on a common plot as a family of curves. For each field density test performed, a one-point compaction test, with additional points as needed, shall be performed on the same

material on which the field density test was conducted. The one-point compaction test shall be performed on the dry side of the optimum moisture content. For comparison of field density data to the proper laboratory compaction test results, the procedures for the one-point and/or two-point compaction control methods as described in paragraph Compaction Procedure, shall be used. Compaction curves plotted on the family of curves shall be of such a scale that the optimum moisture content can be interpreted to the nearest 0.1 percent and the maximum dry density can be interpreted to the nearest 0.1 pcf. When a one-point test plots outside the range of the family of curves, an additional five-point compaction test shall be performed.

3.13.5 Compaction Procedure

3.13.5.1 General

The following paragraphs describe methods of relating field density data to desired or specified values. Compaction control of soils requires comparison of fill water content and/or dry density values obtained in field density tests with optimum water content and/or maximum dry density. At a minimum, control shall be in accordance with the One-Point Compaction Method. Where conditions require, the Two-Point Compaction Method shall be used.

3.13.5.2 One-Point Compaction Method

The material from the field density test is allowed to dry to a water content on the dry side of estimated optimum, and then compacted using the same equipment and procedures used in the five-point compaction test. Thorough mixing is required to obtain uniform drying; otherwise, results obtained may be erroneous. The water content and dry density of the compacted sample are determined and then used to estimate its optimum water content and maximum dry density as illustrated in Figure 1 at the end of this section. In Figure 1, the line of optimums is well defined and the compaction curves are approximately parallel to each other, consequently, the one-point compaction method could be used with a relatively high degree of confidence. However, in Figure 2 at the end of this section, the curves are not parallel to each other and in several instances will cross if extended on the dry side. Consequently, the correct curve cannot be determined from the one-point method; therefore, the two-point compaction method should be used. The one-point method should be used only when the data define a relatively good line of optimums.

3.13.5.3 Two-Point Compaction Method

In the two-point test, one sample of material from the location of the field density test is compacted at the fill water content if thought to be at or on the dry side of optimum water content (otherwise, reduced by drying to this condition) using the same equipment and procedures used in the five-point compaction test. A second sample of material is allowed to dry back about 2 to 3 percentage points dry of the water content of the first sample and then compacted in the same manner. At least one point shall fall within 3 percent of the line of optimums. After compaction, the water contents and dry densities for the two samples are determined. The results are used to identify the appropriate compaction curve for the material being tested as shown in Figure 2 at the end of this section. The data shown in Figure 2 warrant the use of the two-point compaction test because the five-point compaction curves are not parallel. Using point A only, as in the one-point test method, would result in appreciable error as

the shape of the curve would not be defined. The estimated compaction curve can be more accurately defined by two compaction points.

3.14 CAPILLARY WATER BARRIER

Capillary water barrier under concrete floor and area-way slabs on grade shall be placed directly on the subgrade and shall be compacted with a minimum of two passes of a hand-operated plate-type vibratory compactor.

3.15 GRADING

Areas within 5 feet outside of each building and structure line shall be constructed true-to-grade, shaped to drain, and shall be maintained free of trash and debris until final inspection has been completed and the work has been accepted.

3.16 SPREADING TOPSOIL

Areas outside the building lines from which topsoil has been removed shall be topsoiled. The surface shall be free of materials that would hinder planting or maintenance operations. The compacted subgrade soil shall be scarified to a depth of 2 inches by disking or plowing for the bonding of topsoil with the subsoil. Topsoil shall then be uniformly spread to a thickness of 4 inches and graded to the elevations and slopes shown and left free of surface irregularities. Topsoil shall be compacted by one pass of a cultipacker, roller, or other approved equipment weighing 100 to 160 pounds per linear foot of roller. Topsoil shall not be placed when the subgrade is frozen, excessively wet, extremely dry, or in a condition otherwise detrimental to seeding, planting, or proper grading.

3.17 PROTECTION

Settlement or washing that occurs in graded, topsoiled, or backfilled areas prior to acceptance of the work, shall be repaired and grades reestablished to the required elevations and slopes.

-- End of Section --

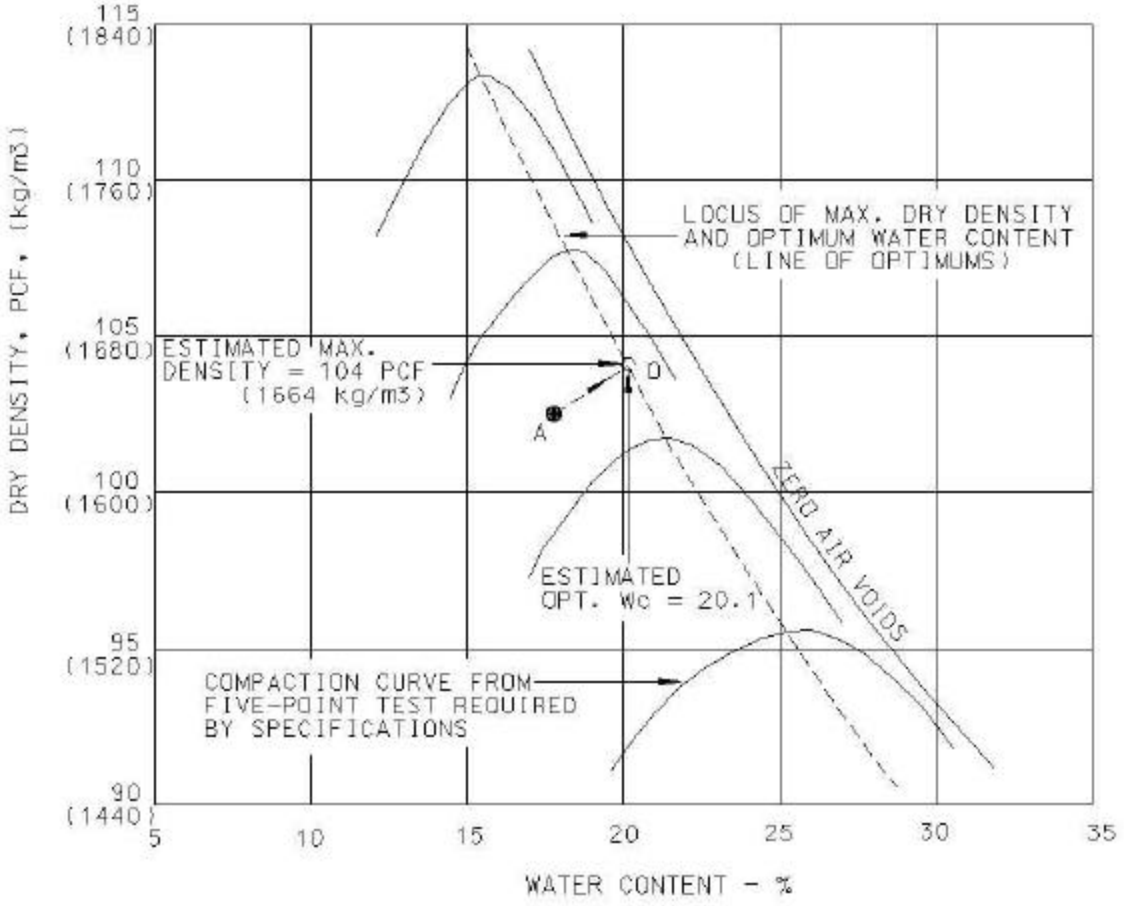

PROCEDURE:

1. Point A is the result of a one-point compaction test on material from field density test. This point must be on the dry side of optimum water content.

2. Point O is the estimated optimum water content and maximum density of the fill material based on a projection of point A approximately parallel to the adjacent compaction curves.

3. Point A must plot within 3 percent of the line of optimums.

*1 **Figure 1. Illustration of one-point compaction method.**

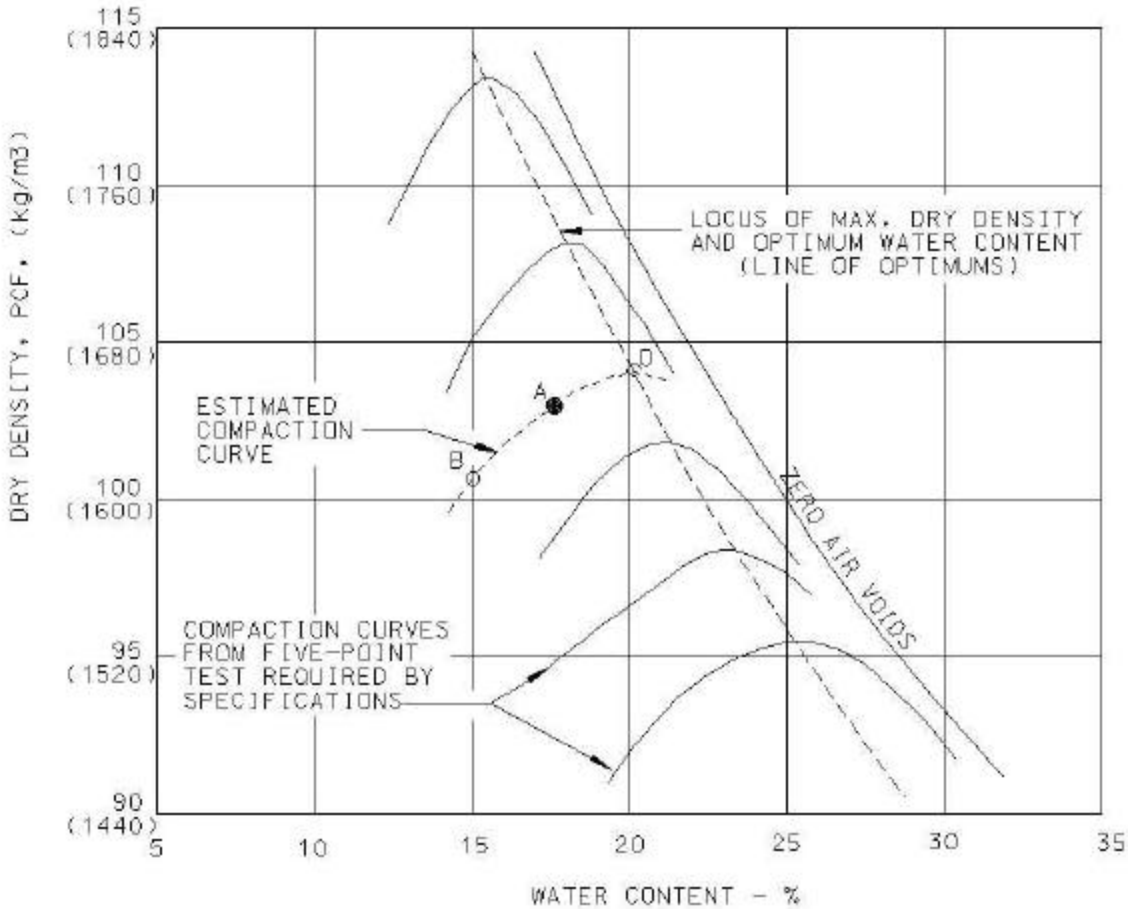

PROCEDURE:

1. Points A and B are results of a two-point compaction test on material from field density test. Points A and B must be on the dry side of optimum water content.

2. The estimated compaction curve based on Points A and B establishes Point O on the locus, which is the estimated maximum dry density and optimum water content of the fill material.

3. One point must plot within 3 percent of the line of optimums.

*1 **Figure 2. Illustration of two-point compaction method.**

SECTION TABLE OF CONTENTS

DIVISION 02 - SITE CONSTRUCTION

SECTION 02316

EXCAVATION, TRENCHING, AND BACKFILLING FOR UTILITIES SYSTEMS

11/97

PART 1 GENERAL

1.1 REFERENCES
1.2 DEGREE OF COMPACTION
1.3 SUBMITTALS

PART 2 PRODUCTS

2.1 MATERIALS
2.1.1 Satisfactory Materials
2.1.2 Unsatisfactory Materials
2.1.3 Cohesionless and Cohesive Materials
2.1.4 Unyielding Material
2.1.5 Unstable Material
2.1.6 Select Granular Material
2.1.7 Initial Backfill Material
2.2 PLASTIC MARKING TAPE
2.3 TRACER WIRE

PART 3 EXECUTION

3.1 EXCAVATION
3.1.1 Trench Excavation Requirements
3.1.1.1 Bottom Preparation
3.1.1.2 Removal of Unyielding Material
3.1.1.3 Removal of Unstable Material
3.1.1.4 Excavation for Appurtenances
3.1.2 Stockpiles
3.2 BACKFILLING AND COMPACTION
3.2.1 Trench Backfill
3.2.1.1 Replacement of Unyielding Material
3.2.1.2 Replacement of Unstable Material
3.2.1.3 Initial Backfill
3.2.1.4 Final Backfill
3.2.2 Backfill for Appurtenances
3.3 SPECIAL REQUIREMENTS
3.3.1 Water Lines
3.3.2 Heat Distribution System
3.3.3 Electrical Distribution System
3.3.4 Plastic Marking Tape
3.3.5 Tracer Wire
3.4 TESTING
3.4.1 Testing Facilities
3.4.2 Testing of Backfill Materials
3.4.3 Field Density Tests
3.4.3.1 Compaction Control
3.4.4 Displacement of Sewers

-- End of Section Table of Contents --

SECTION 02316

EXCAVATION, TRENCHING, AND BACKFILLING FOR UTILITIES SYSTEMS
11/97

PART 1 GENERAL

1.1 REFERENCES

The publications listed below form a part of this specification to the extent referenced. The publications are referred to in the text by basic designation only.

AMERICAN SOCIETY FOR TESTING AND MATERIALS (ASTM)

ASTM C 136	(2001) Sieve Analysis of Fine and Coarse Aggregates
ASTM D 422	(1963; R 1998) Particle-Size Analysis of Soils
ASTM D 1140	(2000) Amount of Material in Soils Finer Than the No. 200 (75-Micrometer) Sieve
ASTM D 1556	(2000) Density and Unit Weight of Soil in Place by the Sand-Cone Method
ASTM D 1557	(2000) Laboratory Compaction Characteristics of Soil Using Modified Effort (56,000 ft-lbf/cu. ft. (2,700 kN-m/cu. m.))
ASTM D 2487	(2000) Classification of Soils for Engineering Purposes (Unified Soil Classification System)

1.2 DEGREE OF COMPACTION

Degree of compaction shall be expressed as a percentage of the maximum density obtained by the test procedure presented in ASTM D 1557.

1.3 SUBMITTALS

Government approval is required for submittals with a "G" designation; submittals not having a "G" designation are for information only. The following shall be submitted in accordance with Section 01330 SUBMITTAL PROCEDURES:

SD-04 Samples

Tracer Wire; G, RO

Sample of tracer wire, including manufacturer's descriptive technical literature, specifications, and installation instructions. Sample and information shall be submitted at least 60 days prior to the initial installation of any tracer wire.

SD-06 Test Reports

Field Density Tests
Testing of Fill and Backfill Materials

Copies of all laboratory and field test reports within 24 hours of the completion of the test.

SD-07 Certificates

Testing; G, RO

Qualifications of the commercial testing laboratory.

PART 2 PRODUCTS

2.1 MATERIALS

2.1.1 Satisfactory Materials

Satisfactory materials shall comprise any materials classified by ASTM D 2487 as GW, GP, GM, GP-GM, GW-GM, GC, GP-GC, GM-GC, SW, SP, SM, SW-SM, SC, SW-SC, SP-SM, SP-SC, CL, ML, and CL-ML.

2.1.2 Unsatisfactory Materials

Materials which do not comply with the requirements for satisfactory materials are unsatisfactory. Unsatisfactory materials also include man-made fills, trash, refuse, or backfills from previous construction. Unsatisfactory material also includes material classified as satisfactory which contains root and other organic matter, frozen material, and stones larger than 3 inches. The Contracting Officer shall be notified of any contaminated materials.

2.1.3 Cohesionless and Cohesive Materials

Cohesionless materials include materials classified in ASTM D 2487 as GW, GP, SW, and SP. Cohesive materials include materials classified as GC, GP-GC, GM-GC, SW-SC, SP-SC, SC, ML, CL, CL-MH, MH, and CH and the unsatisfactory organic materials Pt, OL and OH. Materials classified as GM, GP-GM, GW-GM, SM, SW-SM, and SP-SM will be identified as cohesionless only when the fines have a plasticity index of zero; otherwise they will be considered cohesive.

2.1.4 Unyielding Material

Unyielding material shall consist of rock and gravelly soils with stones greater than 3 inches in any dimension or as defined by the pipe manufacturer, whichever is smaller.

2.1.5 Unstable Material

Unstable material shall consist of materials too wet to properly support the utility pipe, conduit, or appurtenant structure.

2.1.6 Select Granular Material

Select granular material shall consist of well-graded sand, gravel, crushed gravel, crushed stone or crushed slag composed of hard, tough and durable

particles, and shall contain not more than 10 percent by weight of material passing a No. 200 mesh sieve and no less than 95 percent by weight passing the 1 inch sieve. The maximum allowable aggregate size shall be 2 inches, or the maximum size recommended by the pipe manufacturer, whichever is smaller.

2.1.7 Initial Backfill Material

Initial backfill shall consist of select granular material or satisfactory materials free from rocks 3 inches or larger in any dimension or free from rocks of such size as recommended by the pipe manufacturer, whichever is smaller. When the pipe is coated or wrapped for corrosion protection, the initial backfill material shall be free of stones larger than 1 inch in any dimension or as recommended by the pipe manufacturer, whichever is smaller.

2.2 PLASTIC MARKING TAPE

Plastic marking tape shall be acid and alkali-resistant polyethylene film, 6 inches wide with minimum thickness of 0.004 inch. Tape shall have a minimum strength of 1750 psi lengthwise and 1500 psi crosswise. The tape shall be manufactured with integral wires, foil backing or other means to enable detection by a metal detector when the tape is buried up to 3 feet deep. The tape shall be of a type specifically manufactured for marking and locating underground utilities. The metallic core of the tape shall be encased in a protective jacket or provided with other means to protect it from corrosion. Tape color shall be as specified in TABLE 1 and shall bear a continuous printed inscription describing the specific utility.

TABLE 1. Tape Color

Red:	Electric
Yellow:	Gas, Oil, Dangerous Materials
Orange:	Telephone, Telegraph, Television, Police, and Fire Communications
Blue:	Water Systems
Green:	Sewer Systems

2.3 TRACER WIRE

Tracer wire shall be insulated No. 12 AWG solid copper and of a type specifically manufactured for locating underground utilities. Insulation shall be solid yellow in color. Tracer wire shall be subject to approval by the Contracting Officer.

PART 3 EXECUTION

3.1 EXCAVATION

Excavation of every description, regardless of material encountered, shall be performed to the lines and grades indicated. During excavation, material satisfactory for backfilling shall be stockpiled in an orderly manner at a distance from the banks of the trench equal to 1/2 the depth of the excavation, but in no instance closer than 2 feet. Excavated material not required or not satisfactory for backfill shall be disposed of as specified in Section 02300 EARTHWORK. Grading shall be done as may be necessary to prevent surface water from flowing into the excavation, and any water accumulating shall be removed to maintain the stability of the bottom and sides of the excavation. Unauthorized overexcavation shall be backfilled in accordance with paragraph BACKFILLING AND COMPACTION at no

additional cost to the Government.

3.1.1 Trench Excavation Requirements

The trench shall be excavated as recommended by the manufacturer of the pipe to be installed. Trench walls below the top of the pipe shall be sloped, or made vertical, and of such width as recommended in the manufacturer's installation manual. Where no manufacturer's installation manual is available, trench walls shall be made vertical, except that trench construction shall be in accordance with OHSA. Trench walls which are cut back shall be excavated to at least the angle of repose of the soil. Special attention shall be given to slopes which may be adversely affected by weather or moisture content. The trench width below the top of pipe shall not exceed 24 inches plus pipe outside diameter (O.D.) for pipes of less than 24 inches inside diameter and shall not exceed 36 inches plus pipe outside diameter for sizes larger than 24 inches inside diameter. Where recommended trench widths are exceeded, redesign, stronger pipe, or special installation procedures shall be utilized by the Contractor. The cost of redesign, stronger pipe, or special installation procedures shall be borne by the Contractor without any additional cost to the Government.

3.1.1.1 Bottom Preparation

The bottoms of trenches shall be accurately graded to provide uniform bearing and support for the bottom quadrant of each section of the pipe. Bell holes shall be excavated to the necessary size at each joint or coupling to eliminate point bearing. Stones of 3 inches or greater in any dimension, or as recommended by the pipe manufacturer, whichever is smaller, shall be removed to avoid point bearing.

3.1.1.2 Removal of Unyielding Material

Where unyielding material is encountered in the bottom of the trench, such material shall be removed 4 inches below the required grade and replaced with suitable materials as provided in paragraph BACKFILLING AND COMPACTION.

3.1.1.3 Removal of Unstable Material

Where unstable material is encountered in the bottom of the trench, such material shall be removed to the depth directed and replaced to the proper grade with select granular material as provided in paragraph BACKFILLING AND COMPACTION. When removal of unstable material is required due to the Contractor's fault or neglect in performing the work, the resulting material shall be excavated and replaced by the Contractor without additional cost to the Government.

3.1.1.4 Excavation for Appurtenances

Excavation for manholes, catch-basins, inlets, or similar structures shall be sufficient to leave at least 12 inches clear between the outer structure surfaces and the face of the excavation or support members and of sufficient size to permit the placement and removal of forms for the full length and width of structure footings and foundations as shown. Removal of unstable material shall be as specified above. When concrete or masonry is to be placed in an excavated area, special care shall be taken not to disturb the bottom of the excavation. Excavation to the final grade level shall not be made until just before the concrete or masonry is to be placed.

3.1.2 Stockpiles

Stockpiles of satisfactory and unsatisfactory and waste materials shall be placed and graded as specified. Stockpiles shall be kept in a neat and well drained condition, giving due consideration to drainage at all times. The ground surface at stockpile locations shall be cleared, grubbed, and sealed by rubber-tired equipment. Excavated satisfactory and unsatisfactory materials shall be separately stockpiled. Stockpiles of satisfactory materials shall be protected from contamination which may destroy the quality and fitness of the stockpiled material. If the Contractor fails to protect the stockpiles, and any material becomes unsatisfactory, such material shall be removed and replaced with satisfactory material from approved sources at no additional cost to the Government. Locations of stockpiles shall be subject to prior approval of the Contracting Officer.

3.2 BACKFILLING AND COMPACTION

Backfill material shall consist of satisfactory material, select granular material, or initial backfill material as required. Backfill shall be placed in layers not exceeding 6 inches loose thickness for compaction by hand operated machine compactors, and 8 inches loose thickness for other than hand operated machines, unless otherwise specified. Each layer shall be compacted to at least 90 percent maximum density, unless otherwise specified.

3.2.1 Trench Backfill

Trenches shall be backfilled to the grade shown. The trench shall be backfilled to 2 feet above the top of pipe prior to performing the required pressure tests. The joints and couplings shall be left uncovered during the pressure test. The trench shall not be backfilled until all specified tests are performed.

3.2.1.1 Replacement of Unyielding Material

Unyielding material removed from the bottom of the trench shall be replaced with select granular material or initial backfill material.

3.2.1.2 Replacement of Unstable Material

Unstable material removed from the bottom of the trench or excavation shall be replaced with select granular material placed in layers not exceeding 6 inches loose thickness.

3.2.1.3 Initial Backfill

Initial backfill material shall be placed and compacted with approved tampers to a height of at least 1 foot above the utility pipe or conduit. The backfill shall be brought up evenly on both sides of the pipe for the full length of the pipe. Care shall be taken to ensure thorough compaction of the fill under the haunches of the pipe.

3.2.1.4 Final Backfill

The remainder of the trench, except for special materials for roadways, railroads and airfields, shall be filled with satisfactory material. Backfill material shall be placed and compacted as follows:

a. Roadways, Railroads, and Airfields: Backfill shall be placed up to the elevation at which the requirements in Section 02300 EARTHWORK control. Water flooding or jetting methods of compaction will not be permitted.

b. Sidewalks, Turfed or Seeded Areas and Miscellaneous Areas: Backfill shall be deposited in layers of a maximum of 12 inches loose thickness, and compacted to 85 percent maximum density. Compaction by water flooding or jetting will not be permitted. This requirement shall also apply to all other areas not specifically designated above.

3.2.2 Backfill for Appurtenances

After the manhole, catchbasin, inlet, or similar structure has been constructed, and the concrete has been allowed to cure for 7 days, backfill shall be placed in such a manner that the structure will not be damaged by the shock of falling earth. The backfill material shall be deposited and compacted as specified for final backfill, and shall be brought up evenly on all sides of the structure to prevent eccentric loading and excessive stress.

3.3 SPECIAL REQUIREMENTS

Special requirements for both excavation and backfill relating to the specific utilities are as follows:

3.3.1 Water Lines

Trenches shall be of a depth to provide a minimum cover of 30 inches in unpaved areas and 36 inches in paved areas from the existing ground surface, or from the indicated finished grade, whichever is lower, to the top of the pipe.

3.3.2 Heat Distribution System

Initial backfill material shall be free of stones larger than 1/4 inch in any dimension.

3.3.3 Electrical Distribution System

Direct burial cable and conduit or duct line shall have a minimum cover of 24 inches from the finished grade, unless otherwise indicated. Special trenching requirements for direct-burial electrical cables and conduits are specified in Section 16375A ELECTRICAL DISTRIBUTION SYSTEM, UNDERGROUND.

3.3.4 Plastic Marking Tape

Warning tapes shall be installed directly above the pipe, at a depth of 18 inches below finished grade unless otherwise shown.

3.3.5 Tracer Wire

In addition to the plastic marking tape, tracer wire shall also be provided for the underground utilities. Tracer wire shall be provided for all pipe lines, including force mains and sprinkler system lines, but excluding storm drain and sanitary sewer lines. Tracer wire shall be provided for all electrical and communication conduits and direct buried cables. Tracer wire shall be installed on the bottom of the trench just to one side of

where the pipe, conduit, or cable contacts the trench bottom. The wire shall run continuously between and terminate at valve boxes on water and gas lines, regulator stub-ups on gas lines, sprinkler heads and valve boxes on sprinkler system lines, panel boxes on electrical lines, and other such aboveground appurtenances. Each end of the wire shall have an additional length of at least 2 feet coiled up in the appurtenance.

3.4 TESTING

Testing shall be the responsibility of the Contractor and shall be performed at no additional cost to the Government. Inspections and test results shall be certified by a registered professional civil engineer. These certifications shall state that the tests and observations were performed by or under the direct supervision of the engineer and that the results are representative of the materials or conditions being certified by the tests.

3.4.1 Testing Facilities

Tests shall be performed by an approved commercial testing laboratory. No work requiring testing will be permitted until the facilities have been approved by the Contracting Officer.

3.4.2 Testing of Backfill Materials

Classification of backfill materials shall be determined in accordance with ASTM D 2487 and the moisture-density relations of soils shall be determined in accordance with ASTM D 1557. Grain size of bedding and backfill materials shall be determined in accordance with ASTM C 136 or ASTM D 422 and ASTM D 1140 (wash No. 200, without hydrometer), as appropriate. A minimum of one soil classification and one moisture-density relation test shall be performed on each different type of material used for bedding and backfill.

3.4.3 Field Density Tests

Tests shall be performed in sufficient numbers to ensure that the specified density is being obtained. A minimum of one field density test per lift of backfill for every 150 linear feet, or fraction thereof, of installation shall be performed. One moisture density relationship shall be determined for every 250 cubic yards of material used. Field in-place density shall be determined in accordance with ASTM D 1556. Copies of field and laboratory tests shall be furnished to the Contracting Officer. When test results indicate that compaction is not as specified, the material shall be removed, replaced and recompacted to meet specification requirements. Tests on recompacted areas shall be performed to determine conformance with specification requirements, at no additional cost to the Government.

3.4.3.1 Compaction Control

The tests required on materials prior to placement and the compaction control procedures and methods specified in Section 02315 EXCAVATION, FILLING, AND BACKFILLING FOR BUILDINGS, Paragraph TESTING (with the exception of paragraph 3.14.3.1 Field Density Tests) in regard to compaction control of soils, and utilizing the one-point or two-point compaction methods to relate field density data to laboratory test values, shall fully apply to and be considered a part of this specification section.

3.4.4 Displacement of Sewers

After other required tests have been performed and the trench backfill compacted to the finished grade surface, the pipe shall be inspected to determine whether significant displacement has occurred. This inspectiion shall be conducted in the presence of the Contracting Officer. Pipe sizes larger than 36 inches shall be entered and examined, while smaller diameter pipe shall be inspected by shining a light or laser between manholes or manhole locations, or by the use of television cameras passed through the pipe. If, in the judgement of the Contracting Officer, the interior of the pipe shows poor alignment or any other defects that would cause improper functioning of the system, the defects shall be remedied as directed at no additional cost to the Government.

-- End of Section --

SECTION TABLE OF CONTENTS

DIVISION 02 - SITE CONSTRUCTION

SECTION 02364

TERMITICIDE TREATMENT MEASURES FOR SUBTERRANEAN TERMITE CONTROL

06/98

PART 1 GENERAL

1.1 SUBMITTALS
1.2 QUALIFICATIONS
1.3 SAFETY REQUIREMENTS
1.4 DELIVERY, STORAGE, AND HANDLING
1.4.1 Delivery
1.4.2 Storage
1.4.3 Handling
1.5 INSPECTION
1.6 WARRANTY

PART 2 PRODUCTS

2.1 TERMITICIDES

PART 3 EXECUTION

3.1 TECHNICAL REPRESENTATIVE
3.2 SITE PREPARATION
3.2.1 Ground Preparation
3.2.2 Verification
3.2.3 Foundation Exterior
3.2.4 Utilities and Vents
3.3 SITE CONDITIONS
3.3.1 Soil Moisture
3.3.2 Runoff and Wind Drift
3.3.2.1 Vapor Barriers and Waterproof Membranes
3.3.2.2 Utilities and Vents
3.3.3 Placement of Concrete
3.4 TERMITICIDE TREATMENT
3.4.1 Equipment Calibration and Tank Calibration
3.4.2 Mixing and Application
3.4.3 Treatment Method
3.4.3.1 Surface Application
3.4.3.2 Rodding and Trenching
3.4.4 Sampling
3.5 VERIFICATION OF MEASUREMENT
3.6 CLEAN UP, DISPOSAL, AND PROTECTION
3.6.1 Clean Up
3.6.2 Disposal of Termiticide
3.6.3 Protection of Treated Area
3.7 CONDITIONS FOR SATISFACTORY TREATMENT
3.7.1 Equipment Calibrations and Measurements
3.7.2 Testing
3.7.3 Disturbance of Treated Soils
3.7.4 Termites Found Within the Warranty Period
3.8 RE-TREATMENT

-- End of Section Table of Contents --

SECTION 02364

TERMITICIDE TREATMENT MEASURES FOR SUBTERRANEAN TERMITE CONTROL
06/98

PART 1 GENERAL

1.1 SUBMITTALS

Government approval is required for submittals with a "G" designation; submittals not having a "G" designation are for information only. The following shall be submitted in accordance with Section 01330 SUBMITTAL PROCEDURES:

SD-08 Manufacturer's Instructions

Termiticides

Manufacturer's label and Material Safety Data Sheet (MSDS) for termiticides proposed for use.

SD-05 Design Data

Equipment

A listing of equipment to be used.

Foundation Exterior

Written verification that other site work will not disturb the treatment.

Utilities and Vents

Written verification that utilities, vents have been located.

Soil Moisture

Soil moisture test result.

Verification of Measurement

Written verification that the volume of termiticide used meets the application rate.

SD-06 Test Reports

Equipment Calibration and Tank Calibration

Certification of calibration tests conducted on the equipment used in the termiticide application

SD-07 Certificates

Qualifications

Qualifications and state license number of the termiticide applicator.

SD-04 Samples

Termiticides

Termiticide samples obtained during application, upon request.

SD-03 Product Data

Termiticide Application Plan

Termiticide application plan with proposed sequence of treatment work with dates and times. The termiticide trade name, EPA registration number, chemical composition, formulation, concentration of original and diluted material, application rate of active ingredients, method of application, area/volume treated, amount applied; and the name and state license number of the state certified applicator shall be included.

1.2 QUALIFICATIONS

The Contractor's principal business shall be pest control. The Contractor shall be licensed and the termiticide applicators certified in the state where the work is to be performed. Termiticide applicators shall also be certified in the U.S. Environmental Protection Agency (EPA) pesticide applicator category which includes structural pest control.

1.3 SAFETY REQUIREMENTS

The Contractor shall formulate, treat, and dispose of termiticides and their containers in accordance with label directions. Use the clothing and personal protective equipment specified on the labeling for use during all phases of the application.

1.4 DELIVERY, STORAGE, AND HANDLING

1.4.1 Delivery

Termiticide material shall be delivered to the site in the original unopened containers bearing legible labels indicating the EPA registration number and manufacturer's registered uses. All other materials to be used on site for the purpose of termite control shall be delivered in new or otherwise good condition as supplied by the manufacturer or formulator.

1.4.2 Storage

Materials shall be stored in designated areas and in accordance with manufacturer's labels. Termiticides and related materials shall be kept under lock and key when unattended.

1.4.3 Handling

Termiticides shall be handled in accordance with manufacturer's labels. Manufacturer's warnings and precautions shall be observed. Materials shall be handled preventing contamination by dirt, water, and organic material. Protect termiticides from sunlight as recommended by the manufacturer.

1.5 INSPECTION

Termiticides shall be inspected upon arrival at the job site for conformity to type and quality in accordance with paragraph TERMITICIDE. Each label

shall bear evidence of registration under the Federal Insecticide, Fungicide, and Rodenticide Act (FIFRA), as amended. Other materials shall be inspected for conformance with specified requirements. Unacceptable materials shall be removed from the job site.

1.6 WARRANTY

The Contractor shall provide a 5-year written warranty against infestations or reinfestations by subterranean termites of the buildings or building additions constructed under this contract. Warranty shall include annual inspections of the buildings or building additions.

PART 2 PRODUCTS

2.1 TERMITICIDES

Termiticides shall be currently registered by the EPA. Termiticide shall be selected for maximum effectiveness and duration after application. The selected termiticide shall be suitable for the soil and climatic conditions at the project site. Dursban shall not be permitted.

PART 3 EXECUTION

3.1 TECHNICAL REPRESENTATIVE

The certified installation pest management coordinator shall be the technical representative, and shall be present at all meetings concerning treatment measures for subterranean termites. They may be present during treatment application.

3.2 SITE PREPARATION

Work related to final grades, landscape plantings, foundations, or any other alterations to finished construction which might alter the condition of treated soils, shall be coordinated with this specification.

3.2.1 Ground Preparation

Food sources shall be eliminated by removing debris from clearing and grubbing and post construction wood scraps such as ground stakes, form boards, and scrap lumber from the site, before termiticide application begins.

3.2.2 Verification

Before work starts, the Contractor shall verify that final grades are as indicated and smooth grading has been completed. Soil particles shall be finely graded with particles no larger than 1 inch and compacted to eliminate soil movement to the greatest degree.

3.2.3 Foundation Exterior

The Contractor shall provide written verification that final grading and landscape planting operations will not disturb treatment of the soil on the exterior sides of foundation walls, grade beams, and similar structures.

3.2.4 Utilities and Vents

The Contractor shall provide written verification that the location and

identity of HVAC ducts and vents, water and sewer lines, and plumbing have been accomplished prior to the termiticide application.

3.3 SITE CONDITIONS

The following conditions shall determine the time of application.

3.3.1 Soil Moisture

Soils to be treated shall be tested immediately before application. Soil moisture content shall be tested to a minimum depth of 3 inches. The soil moisture shall be as recommended by the termiticide manufacturer. The termiticide will not be applied when soil moisture exceeds manufacturer's recommendations because termiticides do not adhere to the soil particles in saturated soils.

3.3.2 Runoff and Wind Drift

Termiticide shall not be applied during or immediately following heavy rains. Applications shall not be performed when conditions may cause runoff or create an environmental hazard. Applications shall not be performed when average wind speed exceeds 10 miles per hour. The termiticide shall not be allowed to enter water systems, aquifers, or endanger humans or animals.

3.3.2.1 Vapor Barriers and Waterproof Membranes

Termiticide shall be applied prior to placement of a vapor barrier or waterproof membrane.

3.3.2.2 Utilities and Vents

Prior to application, HVAC ducts and vents located in treatment area shall be turned off and blocked to protect people and animals from termiticide.

3.3.3 Placement of Concrete

Concrete covering treated soils shall be placed as soon as the termiticide has reached maximum penetration into the soil. Time for maximum penetration shall be as recommended by the manufacturer.

3.4 TERMITICIDE TREATMENT

3.4.1 Equipment Calibration and Tank Calibration

Immediately prior to commencement of termiticide application, calibration tests shall be conducted on the application equipment to be used and the application tank shall be measured to determine the volume and contents. These tests shall confirm that the application equipment is operating within the manufacturer's specifications and will meet the specified requirements. The Contractor shall provide written certification of the equipment calibration test results within 1 week of testing.

3.4.2 Mixing and Application

Formulating, mixing, and application shall be performed in the presence of the Contracting Officer or the technical representative. A closed system is recommended as it prevents the termiticide from coming into contact with the applicator or other persons. Water for formulating shall only come

from designated locations. Filling hoses shall be fitted with a backflow preventer meeting local plumbing codes or standards. Overflow shall be prevented during the filling operation. Prior to each day of use, the equipment used for applying termiticides shall be inspected for leaks, clogging, wear, or damage. Any repairs are to be performed immediately.

3.4.3 Treatment Method

For areas to be treated, the Contractor shall establish complete and unbroken vertical and/or horizontal soil poison barriers between the soil and all portions of the intended structure which may allow termite access to wood and wood related products. Application shall not be made to areas which serve as crawl spaces or for use as a plenum air space.

3.4.3.1 Surface Application

Surface application shall be used for establishing horizontal barriers. Surface applicants shall be applied as a coarse spray and provide uniform distribution over the soil surface. Termiticide shall penetrate a minimum of 1 inch into the soil, or as recommended by the manufacturer.

3.4.3.2 Rodding and Trenching

Rodding and trenching shall be used for establishing vertical soil barriers. Trenching shall be to the depth of the foundation footing. Width of trench shall be as recommended by the manufacturer, or as indicated. Rodding or other approved method may be implemented for saturating the base of the trench with termiticide. Immediately after termiticide has reached maximum penetration as recommended by the manufacturer, backfilling of the trench shall commence. Backfilling shall be in 6 inch rises or layers. Each rise shall be treated with termiticide.

3.4.4 Sampling

The Contracting Officer may draw from stocks at the job site, at any time and without prior notice, samples of the termiticides used to determine if the amount of active ingredient specified on the label is being applied.

3.5 VERIFICATION OF MEASUREMENT

Once termiticide application has been completed, tank contents shall be measured to determine the remaining volume. The total volume measurement of used contents for the application shall equal the established application rate for the project site conditions. The Contractor shall provide written verification of the measurements.

3.6 CLEAN UP, DISPOSAL, AND PROTECTION

Once application has been completed, the Contractor shall proceed with clean up and protection of the site without delay.

3.6.1 Clean Up

The site shall be cleaned of all material associated with the treatment measures, according to label instructions, and as indicated. Excess and waste material shall be removed and disposed off site.

3.6.2 Disposal of Termiticide

The Contractor shall dispose of residual termiticides and containers off Government property, and in accordance with label instructions and EPA criteria.

3.6.3 Protection of Treated Area

Immediately after the application, the area shall be protected from other use by erecting barricades and providing signage as required or directed. Signage shall be placed inside the entrances to crawl spaces and shall identify the space as treated with termiticide and not safe for children and animals.

3.7 CONDITIONS FOR SATISFACTORY TREATMENT

3.7.1 Equipment Calibrations and Measurements

Where results from the equipment calibration and tank measurements tests are unsatisfactory, re-treatment will be required.

3.7.2 Testing

Should an analysis, performed by a third party, indicate that the samples of the applied termiticide contain less than the amount of active ingredient specified on the label, and/or if soils are treated to a depth less than specified or approved, re-treatment will be required.

3.7.3 Disturbance of Treated Soils

Soil and fill material disturbed after treatment shall be re-treated before placement of slabs or other covering structures.

3.7.4 Termites Found Within the Warranty Period

If live subterranean termite infestation or termite damage is discovered during the warranty period, the Contractor shall re-treat the site.

3.8 RE-TREATMENT

Where re-treatment is required, the Contractor shall:

a. Re-treat the soil and/or perform other treatment as necessary for prevention or elimination of subterranean termite infestation.

b. Repair damage caused by termite infestation.

-- End of Section --

SECTION TABLE OF CONTENTS

DIVISION 02 - SITE CONSTRUCTION

SECTION 02510A

WATER DISTRIBUTION SYSTEM

05/02

PART 1 GENERAL

1.1 REFERENCES
1.2 PIPING
1.2.1 Service Lines
1.2.2 Distribution Lines 3 Inches or Larger
1.2.3 Sprinkler Supply Lines
1.2.4 Excavation, Trenching, and Backfilling
1.3 SUBMITTALS
1.4 HANDLING
1.4.1 Polyethylene (PE) Pipe Fittings and Accessories

PART 2 PRODUCTS

2.1 PIPE
2.1.1 Plastic Pipe
2.1.1.1 PE Plastic Pipe
2.1.2 Ductile-Iron Pipe
2.2 FITTINGS AND SPECIALS
2.2.1 Ductile-Iron Pipe System
2.3 JOINTS
2.3.1 Plastic Pipe Jointing
2.3.1.1 PE Pipe
2.3.2 Ductile-Iron Pipe Jointing
2.4 VALVES
2.4.1 Gate Valves
2.4.2 Indicator Post for Valves
2.5 VALVE BOXES
2.6 FIRE HYDRANTS
2.7 MISCELLANEOUS ITEMS
2.7.1 Tapping Sleeves
2.7.2 Disinfection

PART 3 EXECUTION

3.1 INSTALLATION
3.1.1 Cutting of Pipe
3.1.2 Adjacent Facilities
3.1.2.1 Sewer Lines
3.1.2.2 Water Lines
3.1.3 Joint Deflection
3.1.3.1 Offset for Flexible Plastic Pipe
3.1.3.2 Allowable for Ductile-Iron Pipe
3.1.4 Placing and Laying
3.1.4.1 Plastic Pipe Installation
3.1.4.2 Piping Connections
3.1.5 Jointing
3.1.5.1 PE Pipe Requirements

3.1.5.2 Ductile-Iron Pipe Requirements
3.1.5.3 Transition Fittings
3.1.6 Installation of Service Lines
3.1.6.1 Service Lines Larger than 2 Inches
3.1.6.2 Service Lines for Sprinkler Supplies
3.1.7 Setting of Fire Hydrants, Meters, Valves and Valve Boxes
3.1.7.1 Location of Fire Hydrants
3.1.7.2 Location of Valves
3.1.8 Thrust Restraint
3.1.8.1 Thrust Blocks
3.1.8.2 Restrained Joints
3.2 HYDROSTATIC TESTS
3.2.1 Pressure Test
3.2.2 Leakage Test
3.2.3 Time for Making Test
3.2.4 Concurrent Hydrostatic Tests
3.3 BACTERIALDISINFECTION
3.3.1 Bacteriological Disinfection
3.4 CLEANUP

-- End of Section Table of Contents --

UFGS-02510A (May 2002)

SECTION 02510A

WATER DISTRIBUTION SYSTEM
05/02

PART 1 GENERAL

1.1 REFERENCES

The publications listed below form a part of this specification to the extent referenced. The publications are referred to in the text by basic designation only.

AMERICAN SOCIETY FOR TESTING AND MATERIALS (ASTM)

ASTM D 2657	(1997) Heat Fusion Joining Polyolefin Pipe and Fittings
ASTM D 2774	(1994) Underground Installation of Thermoplastic Pressure Piping

AMERICAN WATER WORKS ASSOCIATION (AWWA)

AWWA B300	(1992) Hypochlorites
AWWA B301	(1992) Liquid Chlorine
AWWA C104	(1995) Cement-Mortar Lining for Ductile-Iron Pipe and Fittings for Water
AWWA C110	(1993) Ductile-Iron and Gray-Iron Fittings, 3 In. Through 48 In. (75 mm through 1200 mm), for Water and Other Liquids
AWWA C111	(1995) Rubber-Gasket Joints for Ductile-Iron Pressure Pipe and Fittings
AWWA C115	(1996) Flanged Ductile-Iron Pipe With Ductile-Iron or Gray-Iron Threaded Flanges
AWWA C151	(1996) Ductile-Iron Pipe, Centrifugally Cast, for Water or Other Liquids
AWWA C153	(1994; Errata Nov 1996) Ductile-Iron Compact Fittings, 3 In. Through 24 In. (76 mm through 610 mm) and 54 In. through 64 In. (1,400 mm through 1,600 mm) for Water Service
AWWA C500	(1993; C500a) Metal-Sealed Gate Valves for Water Supply Service
AWWA C503	(1997) Wet-Barrel Fire Hydrants

AWWA C509	(1994; Addendum 1995) Resilient-Seated Gate Valves for Water Supply Service
AWWA C600	(1993) Installation of Ductile-Iron Water Mains and Their Appurtenances
AWWA C651	(1992) Disinfecting Water Mains
AWWA C901	(1996) Polyethylene (PE) Pressure Pipe and Tubing, 1/2 In. Through 3 In., for Water Service

ASBESTOS CEMENT PIPE PRODUCERS ASSOCIATION (ACPPA)

ACPPA 1344	(1988) Recommended Work Practices for A/C Pipe

DUCTILE IRON PIPE RESEARCH ASSOCIATION (DIPRA)

DIPRA TRD	(1997) Thrust Restraint Design for Ductile Iron Pipe

NATIONAL FIRE PROTECTION ASSOCIATION (NFPA)

NFPA 24	(1995) Installation of Private Fire Service Mains and Their Appurtenances

THE SOCIETY FOR PROTECTIVE COATINGS (SSPC)

SSPC Paint 21	(1991) White or Colored Silicone Alkyd Paint
SSPC Paint 25	(1991) Red Iron Oxide, Zinc Oxide, Raw Linseed Oil and Alkyd Primer (Without Lead and Chromate Pigments)

1.2 PIPING

This section covers water distribution lines, and connections to building service at a point approximately 5 feet outside buildings and structures to which service is required. The Contractor shall have a copy of the manufacturer's recommendations for each material or procedure to be utilized available at the construction site at all times.

1.2.1 Service Lines

Piping for water service lines 3 inchesand larger shall be polyethylene (PE) plastic piping.

1.2.2 Distribution Lines 3 Inches or Larger

Piping for water distribution lines 3 inches or larger shall be ductile or polyethylene (PE) plastic piping, unless otherwise shown or specified.

1.2.3 Sprinkler Supply Lines

Piping for water lines supplying sprinkler systems for building fire protection shall conform to NFPA 24 from the point of connection with the

water distribution system to the building 5 foot line.

1.2.4 Excavation, Trenching, and Backfilling

Excavation, trenching, and backfilling shall be in accordance with the applicable provisions of Section 02300 EARTHWORK, except as modified herein.

1.3 SUBMITTALS

Government approval is required for submittals with a "G" designation; submittals not having a "G" designation are for information only. When used, a designation following the "G" designation identifies the office that will review the submittal for the Government. The following shall be submitted in accordance with Section 01330 SUBMITTAL PROCEDURES:

SD-03 Product Data

Installation.

The manufacturer's recommendations for each material or procedure to be utilized.

Waste Water Disposal Method.

The method proposed for disposal of waste water from hydrostatic tests and disinfection, prior to performing hydrostatic tests.

Satisfactory Installation.

A statement signed by the principal officer of the contracting firm stating that the installation is satisfactory and in accordance with the contract drawings and specifications, and the manufacturer's prescribed procedures and techniques, upon completion of the project and before final acceptance.

SD-06 Test Reports

Bacteriological Disinfection.

Test results from commercial laboratory verifying disinfection.

SD-07 Certificates

Installation.

A statement signed by the manufacturer's field representative certifying that the Contractor's personnel are capable of properly installing the pipe on the project.

1.4 HANDLING

Pipe and accessories shall be handled to ensure delivery to the trench in sound, undamaged condition, including no injury to the pipe coating or lining. If the coating or lining of any pipe or fitting is damaged, the repair shall be made by the Contractor in a satisfactory manner, at no additional cost to the Government. No other pipe or material shall be placed inside a pipe or fitting after the coating has been applied. Pipe shall be carried into position and not dragged. Use of pinch bars and tongs for aligning or turning pipe will be permitted only on the bare ends

of the pipe. The interior of pipe and accessories shall be thoroughly cleaned of foreign matter before being lowered into the trench and shall be kept clean during laying operations by plugging or other approved method. Before installation, the pipe shall be inspected for defects. Material found to be defective before or after laying shall be replaced with sound material without additional expense to the Government. Rubber gaskets that are not to be installed immediately shall be stored in a cool and dark place.

1.4.1 Polyethylene (PE) Pipe Fittings and Accessories

PE pipe, fittings, and accessories shall be handled in conformance with AWWA C901.

PART 2 PRODUCTS

2.1 PIPE

Pipe shall conform to the respective specifications and other requirements specified below.

2.1.1 Plastic Pipe

2.1.1.1 PE Plastic Pipe

Pipe, tubing, and heat-fusion fittings shall conform to AWWA C901.

2.1.2 Ductile-Iron Pipe

Ductile-iron pipe shall conform to AWWA C151, working pressure not less than 150 psi, unless otherwise shown or specified. Pipe shall be cement-mortar lined in accordance with AWWA C104. Linings shall be standard. Flanged ductile iron pipe with threaded flanges shall be in accordance with AWWA C115.

2.2 FITTINGS AND SPECIALS

2.2.1 Ductile-Iron Pipe System

Fittings and specials shall be suitable for 150 psi pressure rating, unless otherwise specified. Fittings and specials for mechanical joint pipe shall conform to AWWA C110. Fittings and specials for use with push-on joint pipe shall conform to AWWA C110 and AWWA C111. Fittings and specials shall be cement-mortar lined (standard thickness) in accordance with AWWA C104. Ductile iron compact fittings shall conform to AWWA C153.

2.3 JOINTS

2.3.1 Plastic Pipe Jointing

2.3.1.1 PE Pipe

Joints for pipe fittings and couplings shall be strong tight joints as specified for PE in Paragraph INSTALLATION. Joints connecting pipe of differing materials shall be made in accordance with the manufacturer's recommendation, and as approved by the Contracting Officer.

2.3.2 Ductile-Iron Pipe Jointing

a. Mechanical joints shall be of the stuffing box type and shall conform to AWWA C111.

b. Push-on joints shall conform to AWWA C111.

c. Rubber gaskets and lubricants shall conform to the applicable requirements of AWWA C111.

2.4 VALVES

2.4.1 Gate Valves

Gate valves shall be designed for a working pressure of not less than 150 psi. Valve connections shall be as required for the piping in which they are installed. Valves shall have a clear waterway equal to the full nominal diameter of the valve, and shall be opened by turning counterclockwise. The operating nut or wheel shall have an arrow, cast in the metal, indicating the direction of opening.

a. Valves 3 inches and larger shall be iron body, bronze mounted, and shall conform to AWWA C500. Flanges shall not be buried. An approved pit shall be provided for all flanged connections.

b. Resilient-Seated Gate Valves: For valves 3 to 12 inches in size, resilient-seated gate valves shall conform to AWWA C509.

2.4.2 Indicator Post for Valves

Each valve shown on the drawings with the designation "P.I.V." shall be equipped with indicator post conforming to the requirements of NFPA 24. Operation shall be by a wrench which shall be attached to each post.

2.5 VALVE BOXES

Valve boxes shall be cast iron or concrete, except that concrete boxes may be installed only in locations not subjected to vehicular traffic. Cast-iron boxes shall be extension type with slide-type adjustment and with flared base. The minimum thickness of metal shall be 3/16 inch. Concrete boxes shall be the standard product of a manufacturer of precast concrete equipment. The word "WATER" shall be cast in the cover. The box length shall adapt, without full extension, to the depth of cover required over the pipe at the valve location.

2.6 FIRE HYDRANTS

Hydrants shall be wet-barrel type conforming to AWWA C503, with either an automatic breakoff check valve or an auxiliary gate valve on hydrant branch. Hydrants shall have a 6 inch bell connection, two 2-1/2 inch hose connections and one 4-1/2 inch pumper connection. Outlets shall have American National Standard fire-hose coupling threads. Working parts shall be bronze. Design, material, and workmanship shall be equal to the latest stock pattern ordinarily produced by the manufacturer. Hydrants shall be painted with 1 coat of red iron oxide, zinc oxide primer conforming to SSPC Paint 25 and 2 finish coats of silicone alkyd paint conforming to SSPC Paint 21, of the installation's standard colors or as directed by the Contracting Officer.

2.7 MISCELLANEOUS ITEMS

2.7.1 Tapping Sleeves

Tapping sleeves of the sizes indicated for connection to existing main shall be the cast gray, ductile, or malleable iron, split-sleeve type with flanged or grooved outlet, and with bolts, follower rings and gaskets on each end of the sleeve. Construction shall be suitable for a maximum working pressure of 150 psi. Bolts shall have square heads and hexagonal nuts. Longitudinal gaskets and mechanical joints with gaskets shall be as recommended by the manufacturer of the sleeve. When using grooved mechanical tee, it shall consist of an upper housing with full locating collar for rigid positioning which engages a machine-cut hole in pipe, encasing an elastomeric gasket which conforms to the pipe outside diameter around the hole and a lower housing with positioning lugs, secured together during assembly by nuts and bolts as specified, pretorqued to 50 foot-pound.

2.7.2 Disinfection

Chlorinating materials shall conform to the following:

Chlorine, Liquid: AWWA B301.

Hypochlorite, Calcium and Sodium: AWWA B300.

PART 3 EXECUTION

3.1 INSTALLATION

3.1.1 Cutting of Pipe

Cutting of pipe shall be done in a neat and workmanlike manner without damage to the pipe. Unless otherwise recommended by the manufacturer and authorized by the Contracting Officer, cutting shall be done with an approved type mechanical cutter. Wheel cutter shall be used when practicable. Copper tubing shall be cut square and all burrs shall be removed. Squeeze type mechanical cutters shall not be used for ductile iron.

3.1.2 Adjacent Facilities

3.1.2.1 Sewer Lines

Where the location of the water pipe is not clearly defined in dimensions on the drawings, the water pipe shall not be laid closer horizontally than 10 feet from a sewer except where the bottom of the water pipe will be at least 12 inches above the top of the sewer pipe, in which case the water pipe shall not be laid closer horizontally than 6 feet from the sewer. Where water lines cross under gravity-flow sewer lines, the sewer pipe, for a distance of at least 10 feet each side of the crossing, shall be fully encased in concrete or shall be made of pressure pipe with no joint located within 3 feet horizontally of the crossing. Water lines shall in all cases cross above sewage force mains or inverted siphons and shall be not less than 2 feet above the sewer main. Joints in the sewer main, closer horizontally than 3 feet to the crossing, shall be encased in concrete.

3.1.2.2 Water Lines

Water lines shall not be laid in the same trench with sewer lines, gas

lines, fuel lines, or electric wiring.

3.1.3 Joint Deflection

3.1.3.1 Offset for Flexible Plastic Pipe

Maximum offset in alignment between adjacent pipe joints shall be as recommended by the manufacturer and approved by the Contracting Officer, but shall not exceed 5 degrees.

3.1.3.2 Allowable for Ductile-Iron Pipe

The maximum allowable deflection shall be as given in AWWA C600. If the alignment requires deflection in excess of the above limitations, special bends or a sufficient number of shorter lengths of pipe shall be furnished to provide angular deflections within the limit set forth.

3.1.4 Placing and Laying

Pipe and accessories shall be carefully lowered into the trench by means of derrick, ropes, belt slings, or other authorized equipment. Water-line materials shall not be dropped or dumped into the trench. Abrasion of the pipe coating shall be avoided. Except where necessary in making connections with other lines or as authorized by the Contracting Officer, pipe shall be laid with the bells facing in the direction of laying. The full length of each section of pipe shall rest solidly upon the pipe bed, with recesses excavated to accommodate bells, couplings, and joints. Pipe that has the grade or joint disturbed after laying shall be taken up and relaid. Pipe shall not be laid in water or when trench conditions are unsuitable for the work. Water shall be kept out of the trench until joints are complete. When work is not in progress, open ends of pipe, fittings, and valves shall be securely closed so that no trench water, earth, or other substance will enter the pipes or fittings. Where any part of the coating or lining is damaged, the repair shall be made by and at the Contractor's expense in a satisfactory manner. Pipe ends left for future connections shall be valved, plugged, or capped, and anchored, as shown.

3.1.4.1 Plastic Pipe Installation

PE Pipe shall be installed in accordance with ASTM D 2774.

3.1.4.2 Piping Connections

Where connections are made between new work and existing mains, the connections shall be made by using specials and fittings to suit the actual conditions. When made under pressure, these connections shall be installed using standard methods as approved by the Contracting Officer. Connections to existing asbestos-cement pipe shall be made in accordance with ACPPA 1344.

3.1.5 Jointing

3.1.5.1 PE Pipe Requirements

Jointing shall comply with ASTM D 2657, Technique I-Socket Fusion or Technique II-Butt Fusion.

3.1.5.2 Ductile-Iron Pipe Requirements

Mechanical and push-on type joints shall be installed in accordance with

AWWA C600.

3.1.5.3 Transition Fittings

Connections between different types of pipe and accessories shall be made with transition fittings approved by the Contracting Officer.

3.1.6 Installation of Service Lines

Service lines shall include the pipeline connecting building piping to water distribution lines to the connections with the building service at a point approximately 5 feet outside the building where such building service exists. Where building services are not installed, the Contractor shall terminate the service lines approximately 5 feet from the site of the proposed building at a point designated by the Contracting Officer. Such service lines shall be closed with plugs or caps. Service lines shall be constructed in accordance with the following requirements:

3.1.6.1 Service Lines Larger than 2 Inches

Service lines larger than 2 inches shall be connected to the main by a tapped saddle, tapping sleeve and valve, reducing tee, depending on the main diameter and the service line diameter, and shall have a gate valve.

3.1.6.2 Service Lines for Sprinkler Supplies

Water service lines used to supply building sprinkler systems for fire protection shall be connected to the water distribution main in accordance with NFPA 24.

3.1.7 Setting of Fire Hydrants, Meters, Valves and Valve Boxes

3.1.7.1 Location of Fire Hydrants

Fire hydrants shall be located and installed as shown. Each hydrant shall be connected to the main with a 6 inch branch line having at least as much cover as the distribution main. Hydrants shall be set plumb with pumper nozzle facing the roadway, with the center of the lowest outlet not less than 18 inches above the finished surrounding grade, and the operating nut not more than 48 inches above the finished surrounding grade. Except where approved otherwise, the backfill around hydrants shall be thoroughly compacted to the finished grade immediately after installation to obtain beneficial use of the hydrant as soon as practicable. The hydrant shall be set upon a slab of concrete not less than 4 inches thick and 15 inches square. Not less than 7 cubic feet of free-draining broken stone or gravel shall be placed around and beneath the waste opening of dry barrel hydrants to ensure drainage.

3.1.7.2 Location of Valves

After delivery, valves, including those in hydrants, shall be drained to prevent freezing and shall have the interiors cleaned of all foreign matter before installation. Stuffing boxes shall be tightened and hydrants and valves shall be fully opened and fully closed to ensure that all parts are in working condition. Valves and valve boxes shall be installed where shown or specified, and shall be set plumb. Valve boxes shall be centered on the valves. Boxes shall be installed over each outside gate valve unless otherwise shown. Where feasible, valves shall be located outside the area of roads and streets. Earth fill shall be tamped around each

valve box or pit to a distance of 4 feet on all sides of the box, or the undisturbed trench face if less than 4 feet.

3.1.8 Thrust Restraint

Plugs, caps, tees and bends deflecting 11.25 degrees or more, either vertically or horizontally, on waterlines 4 inches in diameter or larger, and fire hydrants shall be provided with thrust restraints. Valves shall be securely anchored or shall be provided with thrust restraints to prevent movement. Thrust restraints shall be either thrust blocks or, for ductile-iron pipes, restrained joints.

3.1.8.1 Thrust Blocks

Thrust blocking shall be concrete of a mix not leaner than: 1 cement, 2-1/2 sand, 5 gravel; and having a compressive strength of not less than 2,000 psi after 28 days. Blocking shall be placed between solid ground and the hydrant or fitting to be anchored. Unless otherwise indicated or directed, the base and thrust bearing sides of thrust blocks shall be poured directly against undisturbed earth. The sides of thrust blocks not subject to thrust may be poured against forms. The area of bearing shall be as shown or as directed. Blocking shall be placed so that the fitting joints will be accessible for repair. Steel rods and clamps, protected by galvanizing or by coating with bituminous paint, shall be used to anchor vertical down bends into gravity thrust blocks.

3.1.8.2 Restrained Joints

For ductile-iron pipe, restrained joints shall be designed by the Contractor or the pipe manufacturer in accordance with DIPRA TRD.

3.2 HYDROSTATIC TESTS

Where any section of a water line is provided with concrete thrust blocking for fittings or hydrants, the hydrostatic tests shall not be made until at least 5 days after installation of the concrete thrust blocking, unless otherwise approved.

3.2.1 Pressure Test

After the pipe is laid, the joints completed, fire hydrants permanently installed, and the trench partially backfilled leaving the joints exposed for examination, the newly laid piping or any valved section of piping shall, unless otherwise specified, be subjected for 1 hour to a hydrostatic pressure test of 200 psi. Each valve shall be opened and closed several times during the test. Exposed pipe, joints, fittings, hydrants, and valves shall be carefully examined during the partially open trench test. Joints showing visible leakage shall be replaced or remade as necessary. Cracked or defective pipe, joints, fittings, hydrants and valves discovered in consequence of this pressure test shall be removed and replaced with sound material, and the test shall be repeated until the test results are satisfactory. The requirement for the joints to remain exposed for the hydrostatic tests may be waived by the Contracting Officer when one or more of the following conditions is encountered:

a. Wet or unstable soil conditions in the trench.

b. Compliance would require maintaining barricades and walkways around and across an open trench in a heavily used area that would

require continuous surveillance to assure safe conditions.

c. Maintaining the trench in an open condition would delay completion of the project.

The Contractor may request a waiver, setting forth in writing the reasons for the request and stating the alternative procedure proposed to comply with the required hydrostatic tests. Backfill placed prior to the tests shall be placed in accordance with the requirements of Section 02316 EXCAVATION, TRENCHING, AND BACKFILLING FOR UTILITIES SYSTEMS.

3.2.2 Leakage Test

Leakage test shall be conducted after the pressure tests have been satisfactorily completed. The duration of each leakage test shall be at least 2 hours, and during the test the water line shall be subjected to not less than 200 psi pressure. Leakage is defined as the quantity of water to be supplied into the newly laid pipe, or any valved or approved section, necessary to maintain pressure within 5 psi of the specified leakage test pressure after the pipe has been filled with water and the air expelled. Piping installation will not be accepted if leakage exceeds the allowable leakage which is determined by the following formula:

L = 0.0001351ND(P raised to 0.5 power)

L = Allowable leakage in gallons per hour
N = Number of joints in the length of pipeline tested
D = Nominal diameter of the pipe in inches
P = Average test pressure during the leakage test, in psi gauge

Should any test of pipe disclose leakage greater than that calculated by the above formula, the defective joints shall be located and repaired until the leakage is within the specified allowance, without additional cost to the Government.

3.2.3 Time for Making Test

Except for joint material setting or where concrete thrust blocks necessitate a 5-day delay, pipelines jointed with rubber gaskets, mechanical or push-on joints, or couplings may be subjected to hydrostatic pressure, inspected, and tested for leakage at any time after partial completion of backfill. Cement-mortar lined pipe may be filled with water as recommended by the manufacturer before being subjected to the pressure test and subsequent leakage test.

3.2.4 Concurrent Hydrostatic Tests

The Contractor may elect to conduct the hydrostatic tests using either or both of the following procedures. Regardless of the sequence of tests employed, the results of pressure tests, leakage tests, and disinfection shall be as specified. Replacement, repair or retesting required shall be accomplished by the Contractor at no additional cost to the Government.

a. Pressure test and leakage test may be conducted concurrently.

b. Hydrostatic tests and disinfection may be conducted concurrently, using the water treated for disinfection to accomplish the hydrostatic tests. If water is lost when treated for disinfection and air is admitted to the unit being tested, or if any repair

procedure results in contamination of the unit, disinfection shall be reaccomplished.

3.3 BACTERIALDISINFECTION

3.3.1 Bacteriological Disinfection

Before acceptance of potable water operation, each unit of completed waterline shall be disinfected as prescribed by AWWA C651. From several points in the unitpersonnel from the Contractor's commercial laboratory shall take at least 3 water samples from different points, approved by the Contracting Officer, in proper sterilized containers and perform a bacterial examination in accordance with state approved methods. The commercial laboratory shall be certified by the state's approving authority for examination of potable water. The disinfection shall be repeated until tests indicate the absence of pollution for at least 2 full days. The unit will not be accepted until satisfactory bacteriological results have been obtained.

3.4 CLEANUP

Upon completion of the installation of water lines, and appurtenances, all debris and surplus materials resulting from the work shall be removed.

-- End of Section --

SECTION TABLE OF CONTENTS

DIVISION 02 - SITE CONSTRUCTION

SECTION 02531

SANITARY SEWERS

07/03

PART 1 GENERAL

1.1 REFERENCES
1.2 GENERAL REQUIREMENTS
1.3 SUBMITTALS
1.4 DELIVERY, STORAGE, AND HANDLING
1.4.1 Delivery and Storage
1.4.1.1 Piping
1.4.1.2 Metal Items
1.4.1.3 Cement, Aggregate, and Reinforcement
1.4.2 Handling

PART 2 PRODUCTS

2.1 PIPELINE MATERIALS
2.1.1 Ductile Iron Gravity Sewer Pipe and Associated Fittings
2.1.1.1 Ductile Iron Gravity Pipe and Fittings
2.1.1.2 Ductile Iron Gravity Joints and Jointing Materials
2.1.2 PVC Plastic Gravity Sewer Piping
2.1.2.1 PVC Plastic Gravity Pipe and Fittings
2.1.2.2 PVC Plastic Gravity Joints and Jointing Material
2.2 CONCRETE MATERIALS
2.2.1 Cement Mortar
2.2.2 Portland Cement
2.2.3 Portland Cement Concrete
2.3 MISCELLANEOUS MATERIALS
2.3.1 Precast Concrete Manholes
2.3.2 Gaskets and Connectors
2.3.3 External Preformed Rubber Joint Seals
2.3.4 Metal Items
2.3.4.1 Frames, Covers, and Gratings for Manholes
2.3.4.2 Manhole Steps

PART 3 EXECUTION

3.1 INSTALLATION OF PIPELINES AND APPURTENANT CONSTRUCTION
3.1.1 General Requirements for Installation of Pipelines
3.1.1.1 Location
3.1.1.2 Earthwork
3.1.1.3 Pipe Laying and Jointing
3.1.1.4 Connections to Existing Lines
3.1.2 Special Requirements
3.1.2.1 Installation of Ductile Iron Gravity Sewer Pipe
3.1.2.2 Installation of PVC Plastic Piping
3.1.3 Concrete Work
3.1.4 Manhole Construction
3.1.5 Miscellaneous Construction and Installation
3.1.5.1 Connecting to Existing Manholes

3.1.5.2 Metal Work
3.1.6 Installations of Wye Branches
3.2 FIELD QUALITY CONTROL
3.2.1 Field Tests and Inspections
3.2.2 Tests for Nonpressure Lines
3.2.2.1 Leakage Tests
3.2.2.2 Deflection Testing

-- End of Section Table of Contents --

UFGS-02531 (July 2003)

SECTION 02531

SANITARY SEWERS
07/03

PART 1 GENERAL

1.1 REFERENCES

The publications listed below form a part of this specification to the extent referenced. The publications are referred to in the text by the basic designation only.

ASTM INTERNATIONAL (ASTM)

ASTM A 746	(1999) Ductile Iron Gravity Sewer Pipe
ASTM C 150	(2002a) Portland Cement
ASTM C 270	(2002) Mortar for Unit Masonry
ASTM C 443	(2002) Joints for Concrete Pipe and Manholes, Using Rubber Gaskets
ASTM C 478	(2002a) Precast Reinforced Concrete Manhole Sections
ASTM C 478M	(1997) Precast Reinforced Concrete Manhole Sections (Metric)
ASTM C 923	(2002) Resilient Connectors Between Reinforced Concrete Manhole Structures, Pipes and Laterals
ASTM C 924	(2002) Testing Concrete Pipe Sewer Lines by Low-Pressure Air Test Method
ASTM C 94/C 94M	(2000e2) Ready-Mixed Concrete
ASTM C 969	(2002) Infiltration and Exfiltration Acceptance Testing of Installed Precast Concrete Pipe Sewer Lines
ASTM C 972	(2000) Compression-Recovery of Tape Sealant
ASTM C 990	(2001a) Joints for Concrete Pipe, Manholes, and Precast Box Sections Using Preformed Flexible Joint Sealers
ASTM D 2321	(2000) Underground Installation of Thermoplastic Pipe for Sewers and Other Gravity-Flow Applications
ASTM D 2412	(2002) Determination of External Loading

	Characteristics of Plastic Pipe by Parallel-Plate Loading
ASTM D 3034	(2000) Type PSM Poly(Vinyl Chloride) (PVC) Sewer Pipe and Fittings
ASTM D 3212	(1996a) Joints for Drain and Sewer Plastic Pipes Using Flexible Elastomeric Seals
ASTM D 4101	(2002a) Propylene Injection and Extrusion Materials
ASTM D 412	(1998a) Vulcanized Rubber and Thermoplastic Rubbers and Thermoplastic Elastomers - Tension
ASTM D 624	(2000e1) Tear Strength of Conventional Vulcanized Rubber and Thermoplastic Elastomers
ASTM F 477	(2002e1) Elastomeric Seals (Gaskets) for Joining Plastic Pipe
ASTM F 949	(2001a) Poly(Vinyl Chloride) (PVC) Corrugated Sewer Pipe with a Smooth Interior and Fittings

AMERICAN WATER WORKS ASSOCIATION(AWWA)

AWWA C104	(1995) Cement-Mortar Lining for Ductile-Iron Pipe and Fittings for Water
AWWA C110	(1998) Ductile-Iron and Gray-Iron Fittings, 3 In. Through 48 In. (76 mm through 1219 mm), for Water
AWWA C111	(2000) Rubber-Gasket Joints for Ductile-Iron Pressure Pipe and Fittings
AWWA C153	(2000) Ductile-Iron Compact Fittings for Water Service
AWWA C600	(1999) Installation of Ductile-Iron Water Mains and Their Appurtenances

U.S. GENERAL SERVICES ADMINISTRATION (GSA)

FS A-A-60005	(Basic) Frames, Covers, Gratings, Steps, Sump and Catch Basin, Manhole

U.S. NATIONAL ARCHIVES AND RECORDS ADMINISTRATION (NARA)

29 CFR 1910.27	Fixed Ladders

UNI-BELL PVC PIPE ASSOCIATION (UBPPA)

UBPPA UNI-B-6	(1998) Recommended Practice for the Low-Pressure Air Testing of Installed

1.2 GENERAL REQUIREMENTS

The construction required herein shall include appurtenant structures and building sewers to points of connection with the building drains 5 feet outside the building to which the sewer system is to be connected. The Contractor shall replace damaged material and redo unacceptable work at no additional cost to the Government. Excavation and backfilling is specified in Section 02300 EARTHWORK. Backfilling shall be accomplished after inspection by the Contracting Officer. Before, during, and after installation, plastic pipe and fittings shall be protected from any environment that would result in damage or deterioration to the material. The Contractor shall have a copy of the manufacturer's instructions available at the construction site at all times and shall follow these instructions unless directed otherwise by the Contracting Officer. Solvents, solvent compounds, lubricants, elastomeric gaskets, and any similar materials required to install the plastic pipe shall be stored in accordance with the manufacturer's recommendation and shall be discarded if the storage period exceeds the recommended shelf life. Solvents in use shall be discarded when the recommended pot life is exceeded.

1.3 SUBMITTALS

Government approval is required for submittals with a "G" designation; submittals not having a "G" designation are for information only or as otherwise designated. When used, a designation following the "G" designation identifies the office that will review the submittal for the Government. The following shall be submitted in accordance with Section 01330 SUBMITTAL PROCEDURES:

SD-02 Shop Drawings

Precast concrete manhole

Metal items

Frames, covers, and gratings

SD-03 Product Data

Pipeline materials

Submit manufacturer's standard drawings or catalog cuts.

SD-07 Certificates

Portland Cement

Certificates of compliance stating the type of cement used in manufacture of concrete pipe, fittings and precast manholes.

1.4 DELIVERY, STORAGE, AND HANDLING

1.4.1 Delivery and Storage

1.4.1.1 Piping

Inspect materials delivered to site for damage; store with minimum of handling. Store materials on site in enclosures or under protective coverings. Store plastic piping and jointing materials and rubber gaskets under cover out of direct sunlight. Do not store materials directly on the ground. Keep inside of pipes and fittings free of dirt and debris.

1.4.1.2 Metal Items

Check upon arrival; identify and segregate as to types, functions, and sizes. Store off the ground in a manner affording easy accessibility and not causing excessive rusting or coating with grease or other objectionable materials.

1.4.1.3 Cement, Aggregate, and Reinforcement

As specified in Section 03307A CONCRETE FOR MINOR STRUCTURES.

1.4.2 Handling

Handle pipe, fittings, and other accessories in such manner as to ensure delivery to the trench in sound undamaged condition. Carry, do not drag, pipe to trench.

PART 2 PRODUCTS

2.1 PIPELINE MATERIALS

Pipe shall conform to the respective specifications and other requirements specified below.

2.1.1 Ductile Iron Gravity Sewer Pipe and Associated Fittings

2.1.1.1 Ductile Iron Gravity Pipe and Fittings

Ductile iron pipe shall conform to ASTM A 746, Thickness Class 50. Fittings shall conform to AWWA C110 or AWWA C153. Fittings with push-on joint ends shall conform to the same requirements as fittings with mechanical-joint ends, except that the bell design shall be modified, as approved by the Contracting Officer, for push-on joint. Fittings shall have strength at least equivalent to that of the pipe. Ends of pipe and fittings shall be suitable for the joints specified hereinafter. Pipe and fittings shall have cement-mortar lining conforming to AWWA C104, standard thickness.

2.1.1.2 Ductile Iron Gravity Joints and Jointing Materials

Pipe and fittings shall have push-on joints, except as otherwise specified in this paragraph. Push-on joint pipe ends and fitting ends, gaskets, and lubricant for joint assembly shall conform to AWWA C111.

2.1.2 PVC Plastic Gravity Sewer Piping

2.1.2.1 PVC Plastic Gravity Pipe and Fittings

ASTM D 3034, SDR 35, or ASTM F 949 with ends suitable for elastomeric gasket joints.

2.1.2.2 PVC Plastic Gravity Joints and Jointing Material

Joints shall conform to ASTM D 3212. Gaskets shall conform to ASTM F 477.

2.2 CONCRETE MATERIALS

2.2.1 Cement Mortar

Cement mortar shall conform to ASTM C 270, Type M with Type II cement.

2.2.2 Portland Cement

Portland cement shall conform to ASTM C 150, Type II for concrete used in manholes and type optional with the Contractor for cement used in concrete cradle, concrete encasement, and thrust blocking.

2.2.3 Portland Cement Concrete

Portland cement concrete shall conform to ASTM C 94/C 94M, compressive strength of 4000 psi at 28 days, except for concrete cradle and encasement or concrete blocks for manholes. Concrete used for cradle and encasement shall have a compressive strength of 2500 psiminimum at 28 days. Concrete in place shall be protected from freezing and moisture loss for 7 days.

2.3 MISCELLANEOUS MATERIALS

2.3.1 Precast Concrete Manholes

Precast concrete manhole risers, base sections, and tops shall conform to ASTM C 478; base and first riser shall be monolithic.

2.3.2 Gaskets and Connectors

Gaskets for joints between manhole sections shall conform to ASTM C 443. Resilient connectors for making joints between manhole and pipes entering manhole shall conform to ASTM C 923 or ASTM C 990.

2.3.3 External Preformed Rubber Joint Seals

An external preformed rubber joint seal shall be an accepted method of sealing cast iron covers to precast concrete sections to prevent ground water infiltration into sewer systems. All finished and sealed manholes constructed in accordance with paragraph entitled "Manhole Construction" shall be tested for leakage in the same manner as pipelines as described in paragraph entitled "Leakage Tests." The seal shall be multi-section with a neoprene rubber top section and all lower sections made of Ethylene Proplene Di Monomer (EPDM) rubber with a minimum thickness of 60 mils. Each unit shall consist of a top and bottom section and shall have mastic on the bottom of the bottom section and mastic on the top and bottom of the top section. The mastic shall be a non-hardening butyl rubber sealant and shall seal to the cone/top slab of the manhole/catch basin and over the lip

of the casting. Extension sections shall cover up to two more adjusting rings. Properties and values are listed in the following tables:

Properties, Test Methods and Minimum Values for Rubber used in Preformed Joint Seals

Physical Properties	Test Methods	EPDM	Neoprene	Butyl mastic
Tensile, psi	ASTM D 412	1840	2195	-
Elongation percent	ASTM D 412	553	295	350
Tear Resistance, ppi	ASTM D 624 (Die B)	280	160	-
Rebound, percent, 5 minutes	ASTM C 972 (mod.)	-	-	11
Rebound, percent, 2 hours	ASTM C 972	-	-	12

2.3.4 Metal Items

2.3.4.1 Frames, Covers, and Gratings for Manholes

FS A-A-60005, cast iron; figure numbers shall be as follows:

a. Traffic manhole: Provide in paved areas.

Frame: Figure 1, Size 22A
Cover: Figure 8, Size 22A
Steps: Figure 19

b. Non-traffic manhole:

Frame: Figure 4, Size 22
Cover: Figure 12, Size 22
Steps: Figure 19

Frames and covers shall be cast iron, ductile iron or reinforced concrete. Cast iron frames and covers shall be as indicated or shall be of type suitable for the application, circular, without vent holes. The frames and covers shall have a combined weight of not less than 400 pounds. Reinforced concrete frames and covers shall be as indicated or shall conform to ASTM C 478 or ASTM C 478M. The word "Sewer" shall be stamped or cast into covers so that it is plainly visible.

2.3.4.2 Manhole Steps

Zinc-coated steel conforming to 29 CFR 1910.27. As an option, plastic or rubber coating pressure-molded to the steel may be used. Plastic coating shall conform to ASTM D 4101, copolymer polypropylene. Rubber shall conform to ASTM C 443, except shore A durometer hardness shall be 70 plus or minus 5. Aluminum steps or rungs will not be permitted. Steps are not required in manholes less than 4 feet deep.

PART 3 EXECUTION

3.1 INSTALLATION OF PIPELINES AND APPURTENANT CONSTRUCTION

3.1.1 General Requirements for Installation of Pipelines

Apply except where specific exception is made in the following paragraphs entitled "Special Requirements."

3.1.1.1 Location

The work covered by this section shall terminate at a point approximately 5 feet from the building. Where the location of the sewer is not clearly defined by dimensions on the drawings, do not lay sewer line closer horizontally than 10 feet to a water main or service line. Where sanitary sewer lines pass above water lines, encase sewer in concrete for a distance of 10 feet on each side of the crossing, or substitute rubber-gasketed pressure pipe for the pipe being used for the same distance. Where sanitary sewer lines pass below water lines, lay pipe so that no joint in the sewer line will be closer than 3 feet, horizontal distance, to the water line.

3.1.1.2 Earthwork

Perform earthwork operations in accordance with Section 02300 EARTHWORK.

3.1.1.3 Pipe Laying and Jointing

Inspect each pipe and fitting before and after installation; replace those found defective and remove from site. Provide proper facilities for lowering sections of pipe into trenches. Lay nonpressure pipe with the bell ends in the upgrade direction. Adjust spigots in bells to give a uniform space all around. Blocking or wedging between bells and spigots will not be permitted. Replace by one of the proper dimensions, pipe or fittings that do not allow sufficient space for installation of joint material. At the end of each work day, close open ends of pipe temporarily with wood blocks or bulkheads. Provide batterboards not more than 25 feet apart in trenches for checking and ensuring that pipe invert elevations are as indicated. Laser beam method may be used in lieu of batterboards for the same purpose.

Branch connections shall be made by use of regular fittings or solvent cemented saddles as approved. Saddles for PVC pipe shall conform to Table 4 of ASTM D 3034.

3.1.1.4 Connections to Existing Lines

Obtain approval from the Contracting Officer before making connection to existing line. Conduct work so that there is minimum interruption of service on existing line.

3.1.2 Special Requirements

3.1.2.1 Installation of Ductile Iron Gravity Sewer Pipe

Unless otherwise specified, install pipe and associated fittings in accordance with paragraph entitled "General Requirements for Installation of Pipelines" of this section and with the requirements of AWWA C600 for pipe installation and joint assembly.

a. Make push-on joints with the gaskets and lubricant specified for this type joint and assemble in accordance with the applicable requirements of AWWA C600 for joint assembly.

3.1.2.2 Installation of PVC Plastic Piping

Install pipe and fittings in accordance with paragraph entitled "General Requirements for Installation of Pipelines" of this section and with the requirements of ASTM D 2321 for laying and joining pipe and fittings. Make joints with the gaskets specified for joints with this piping and assemble in accordance with the requirements of ASTM D 2321 for assembly of joints. Make joints to other pipe materials in accordance with the recommendations of the plastic pipe manufacturer.

3.1.3 Concrete Work

Cast-in-place concrete is included in Section 03307A CONDTETE FOR MINOR STRUCTUTRES.

The pipe shall be supported on a concrete cradle, or encased in concrete where indicated or directed.

3.1.4 Manhole Construction

Construct base slab of cast-in-place concrete or use precast concrete base sections. Make inverts in cast-in-place concrete and precast concrete bases with a smooth-surfaced semi-circular bottom conforming to the inside contour of the adjacent sewer sections. For changes in direction of the sewer and entering branches into the manhole, make a circular curve in the manhole invert of as large a radius as manhole size will permit. For cast-in-place concrete construction, either pour bottom slabs and walls integrally or key and bond walls to bottom slab. No parging will be permitted on interior manhole walls. For precast concrete construction, make joints between manhole sections with the gaskets specified for this purpose; install in the manner specified for installing joints in concrete piping. Parging will not be required for precast concrete manholes. Cast-in-place concrete work shall be in accordance with the requirements specified under paragraph entitled "Concrete Work" of this section. Make joints between concrete manholes and pipes entering manholes with the resilient connectors specified for this purpose; install in accordance with the recommendations of the connector manufacturer. Where a new manhole is constructed on an existing line, remove existing pipe as necessary to construct the manhole. Cut existing pipe so that pipe ends are approximately flush with the interior face of manhole wall, but not protruding into the manhole. Use resilient connectors as previously specified for pipe connectors to concrete manholes.

3.1.5 Miscellaneous Construction and Installation

3.1.5.1 Connecting to Existing Manholes

Pipe connections to existing manholes shall be made so that finish work will conform as nearly as practicable to the applicable requirements specified for new manholes, including all necessary concrete work, cutting, and shaping. The connection shall be centered on the manhole. Holes for the new pipe shall be of sufficient diameter to allow packing cement mortar around the entire periphery of the pipe but no larger than 1.5 times the diameter of the pipe. Cutting the manhole shall be done in a manner that

will cause the least damage to the walls.

3.1.5.2 Metal Work

a. Workmanship and finish: Perform metal work so that workmanship and finish will be equal to the best practice in modern structural shops and foundries. Form iron to shape and size with sharp lines and angles. Do shearing and punching so that clean true lines and surfaces are produced. Make castings sound and free from warp, cold shuts, and blow holes that may impair their strength or appearance. Give exposed surfaces a smooth finish with sharp well-defined lines and arises. Provide necessary rabbets, lugs, and brackets wherever necessary for fitting and support.

3.1.6 Installations of Wye Branches

Cutting into piping for connections shall not be done except in special approved cases. When the connecting pipe cannot be adequately supported on undisturbed earth or tamped backfill, the pipe shall be encased in concrete backfill or supported on a concrete cradle as directed. Concrete required because of conditions resulting from faulty construction methods or negligence by the Contractor shall be installed at no additional cost to the Government. The installation of wye branches in an existing sewer shall be made by a method which does not damage the integrity of the existing sewer. One acceptable method consists of removing one pipe section, breaking off the upper half of the bell of the next lower section and half of the running bell of wye section. After placing the new section, it shall be rotated so that the broken half of the bell will be at the bottom. The two joints shall then be made with joint packing and cement mortar.

3.2 FIELD QUALITY CONTROL

3.2.1 Field Tests and Inspections

The Contracting Officer will conduct field inspections and witness field tests specified in this section. The Contractor shall perform field tests and provide labor, equipment, and incidentals required for testing. Be able to produce evidence, when required, that each item of work has been constructed in accordance with the drawings and specifications.

3.2.2 Tests for Nonpressure Lines

Check each straight run of pipeline for gross deficiencies by holding a light in a manhole; it shall show a practically full circle of light through the pipeline when viewed from the adjoining end of line. When pressure piping is used in a nonpressure line for nonpressure use, test this piping as specified for nonpressure pipe.

3.2.2.1 Leakage Tests

Test lines for leakage by either infiltration tests or exfiltration tests, or by low-pressure air tests. Prior to testing for leakage, backfill trench up to at least lower half of pipe. When necessary to prevent pipeline movement during testing, place additional backfill around pipe sufficient to prevent movement, but leaving joints uncovered to permit inspection. When leakage or pressure drop exceeds the allowable amount specified, make satisfactory correction and retest pipeline section in the same manner. Correct visible leaks regardless of leakage test results.

a. Infiltration tests and exfiltration tests: Perform these tests for sewer lines made of the specified materials, not only concrete, in accordance with ASTM C 969. Make calculations in accordance with the Appendix to ASTM C 969.

b. Low-pressure air tests: Perform tests as follows:

(1) Ductile-iron pipelines: Test in accordance with the applicable requirements of ASTM C 924. Allowable pressure drop shall be as given in ASTM C 924. Make calculations in accordance with the Appendix to ASTM C 924.

(2) PVC plastic pipelines: Test in accordance with UBPPA UNI-B-6. Allowable pressure drop shall be as given in UBPPA UNI-B-6. Make calculations in accordance with the Appendix to UBPPA UNI-B-6.

3.2.2.2 Deflection Testing

Perform a deflection test on entire length of installed plastic pipeline on completion of work adjacent to and over the pipeline, including leakage tests, backfilling, placement of fill, grading, paving, concreting, and any other superimposed loads determined in accordance with ASTM D 2412. Deflection of pipe in the installed pipeline under external loads shall not exceed 4.5 percent of the average inside diameter of pipe. Determine whether the allowable deflection has been exceeded by use of a pull-through device or a deflection measuring device.

a. Pull-through device: This device shall be a spherical, spheroidal, or elliptical ball, a cylinder, or circular sections fused to a common shaft. Circular sections shall be so spaced on the shaft that distance from external faces of front and back sections will equal or exceed diameter of the circular section. Pull-through device may also be of a design promulgated by the Uni-Bell Plastic Pipe Association, provided the device meets the applicable requirements specified in this paragraph, including those for diameter of the device, and that the mandrel has a minimum of 9 arms. Ball, cylinder, or circular sections shall conform to the following:

(1) A diameter, or minor diameter as applicable, of 95 percent of the average inside diameter of the pipe; tolerance of plus 0.5 percent will be permitted.

(2) Homogeneous material throughout, shall have a density greater than 1.0 as related to water at 39.2 degrees F, and shall have a surface Brinell hardness of not less than 150.

(3) Center bored and through-bolted with a 1/4 inch minimum diameter steel shaft having a yield strength of not less than 70,000 pounds per square inch, with eyes or loops at each end for attaching pulling cables.

(4) Each eye or loop shall be suitably backed with a flange or heavy washer such that a pull exerted on opposite end of shaft will produce compression throughout remote end.

b. Deflection measuring device: Sensitive to 1.0 percent of the diameter of the pipe being tested and shall be accurate to 1.0

percent of the indicated dimension. Deflection measuring device shall be approved prior to use.

c. Pull-through device procedure: Pass the pull-through device through each run of pipe, either by pulling it through or flushing it through with water. If the device fails to pass freely through a pipe run, replace pipe which has the excessive deflection and completely retest in same manner and under same conditions.

d. Deflection measuring device procedure: Measure deflections through each run of installed pipe. If deflection readings in excess of 4.5 percent of average inside diameter of pipe are obtained, retest pipe by a run from the opposite direction. If retest continues to show a deflection in excess of 4.5 percent of average inside diameter of pipe, replace pipe which has excessive deflection and completely retest in same manner and under same conditions.

-- End of Section --

SECTION TABLE OF CONTENTS

DIVISION 02 - SITE CONSTRUCTION

SECTION 02532AA

FORCE MAINS; SEWER

07/98

PART 1 GENERAL

1.1 REFERENCES
1.2 SUBMITTALS
1.3 DELIVERY AND STORAGE

PART 2 PRODUCTS

2.1 PIPE AND FITTINGS
2.1.1 Concrete Pressure Pipe
2.1.2 Plastic Pipe
2.1.2.1 PE Pipe
2.1.2.2 Polypropylene Pipe
2.1.2.3 PVC Pipe
2.1.2.4 Oriented Polyvinyl Chloride (PVCO) Plastic Pipe
2.1.3 RPMP Pipe
2.1.4 RTRP Lines
2.1.5 Ductile Iron Pipe
2.1.6 Steel Pipe
2.2 JOINTS
2.2.1 PE Piping
2.2.2 Polypropylene Piping
2.2.3 PVC Piping
2.2.4 PVCO Pipe
2.2.5 Ductile Iron Piping
2.2.6 Steel Piping
2.3 VALVES
2.3.1 Gate Valves
2.3.2 Check Valves
2.3.3 Plug Valves
2.3.4 Pinch Valves
2.3.5 Air Release Valves
2.4 VALVE BOXES
2.5 VALVE VAULTS
2.6 MISCELLANEOUS MATERIALS
2.6.1 Pipe Coatings and Linings
2.6.2 Joint Lubricants
2.6.3 Bolts, Nuts and Glands
2.6.4 Joint Compound
2.6.5 Joint Tape
2.6.6 Bond Wire

PART 3 EXECUTION

3.1 INSTALLATION
3.1.1 Adjacent Facilities
3.1.2 Cutting
3.1.3 Laying

3.1.4 Jointing
3.1.4.1 Concrete Pressure Pipe
3.1.4.2 Joints for PE Pipe
3.1.4.3 Joints for Polypropylene Pipe
3.1.4.4 Joints for PVC Pipe
3.1.4.5 Joints for RPMP Pipe
3.1.4.6 Joints for RTRP Lines
3.1.4.7 Joints for Ductile Iron Pipe
3.1.4.8 Joints for Steel Pipe
3.1.5 Coating and Lining
3.1.6 Installation of Valves
3.1.7 Installation of Valve Boxes
3.1.8 Installation of Valve Vaults
3.1.9 Drain Lines
3.1.10 Thrust Restraint
3.1.10.1 Thrust Blocks
3.1.10.2 Restrained Joints
3.1.11 Grout
3.1.12 Bonded Joints
3.2 HYDROSTATIC TESTS
3.2.1 Pressure Test
3.2.2 Leakage Test
3.2.3 Retesting

-- End of Section Table of Contents --

UFGS-02532AA (July 1998)

SECTION 02532AA

FORCE MAINS; SEWER
07/98

PART 1 GENERAL

1.1 REFERENCES

The publications listed below form a part of this specification to the extent referenced. The publications are referred to in the text by basic designation only.

AMERICAN PETROLEUM INSTITUTE (API)

API Spec 6D	(1994; Supple 1 Jun 1996; Supple 2 Dec 1997) Pipeline Valves (Gate, Plug, Ball, and Check Valves)

AMERICAN SOCIETY FOR TESTING AND MATERIALS (ASTM)

ASTM A 53	(1997) Pipe, Steel, Black and Hot-Dipped, Zinc-Coated, Welded and Seamless
ASTM C 478	(1996) Precast Reinforced Concrete Manhole Sections
ASTM D 1784	(1996) Rigid Poly(Vinyl Chloride) (PVC) Compounds and Chlorinated Poly(Vinyl Chloride) (CPVC) Compounds
ASTM D 1785	(1996a) Poly(Vinyl Chloride) (PVC) Plastic Pipe, Schedules 40, 80, and 120
ASTM D 2122	(1995) Determining Dimensions of Thermoplastic Pipe and Fittings
ASTM D 2241	(1996a) Poly(Vinyl Chloride) (PVC) Pressure-Rated Pipe (SDR Series)
ASTM D 2464	(1996a) Threaded Poly(Vinyl Chloride) (PVC) Plastic Pipe Fittings, Schedule 80
ASTM D 2564	(1996a) Solvent Cements for Poly(Vinyl Chloride) (PVC) Plastic Piping Systems
ASTM D 2657	(1996) Heat Fusion Joining Polyolefin Pipe and Fittings
ASTM D 2774	(1994) Underground Installation of Thermoplastic Pressure Piping
ASTM D 2996	(1995) Filament-Wound "Fiberglass" (Glass-Fiber-Reinforced

	Thermosetting-Resin) Pipe
ASTM D 3035	(1995) Polyethylene (PE) Plastic Pipe (DR-PR) Based on Controlled Outside Diameter
ASTM D 3139	(1996a) Joints for Plastic Pressure Pipes Using Flexible Elastomeric Seals
ASTM D 3308	(1991a) PTFE Resin Skived Tape
ASTM D 3350	(1996) Polyethylene Plastics Pipe and Fittings Materials
ASTM D 3517	(1996) "Fiberglass" (Glass-Fiber-Reinforced Thermosetting-Resin) Pressure Pipe
ASTM D 4101	(1996a) Propylene Plastic Injection and Extrusion Materials
ASTM F 477	(1995) Elastomeric Seals (Gaskets) for Joining Plastic Pipe
ASTM F 1483	(1993) Oriented Poly(Vinyl Chloride), PVCO, Pressure Pipe

AMERICAN SOCIETY OF MECHANICAL ENGINEERS (ASME)

ASME B16.1	(1989) Cast Iron Pipe Flanges and Flanged Fittings
ASME B16.3	(1992) Malleable Iron Threaded Fittings

AMERICAN WATER WORKS ASSOCIATION (AWWA)

AWWA ANSI/AWWA C110/A21.10	(1993) Ductile-Iron and Gray-Iron Fittings, 3 In. Through 48 In. (75 mm through 1200 mm), for Water and Other Liquids
AWWA ANSI/AWWA C111/A21.11	(1995) Rubber-Gasket Joints for Ductile-Iron Pressure Pipe and Fittings
AWWA ANSI/AWWA C115/A21.15	(1994) Flanged Ductile-Iron Pipe with Ductile-Iron or Gray-Iron Threaded Flanges
AWWA ANSI/AWWA C151/A21.51	(1996) Ductile-Iron Pipe, Centrifugally Cast, for Water or Other Liquids
AWWA C200	(1991) Steel Water Pipe - 6 In. (150 mm) and Larger
AWWA C203	(1991) Coal-Tar Protective Coatings and Linings for Steel Water Pipelines - Enamel and Tape - Hot-Applied
AWWA C207	(1994) Steel Pipe Flanges for Waterworks Service - Sizes 4 In. Through 144 In. (100

	mm through 3,600 mm)
AWWA ANSI/AWWA C208	(1996) Dimensions for Fabricated Steel Water Pipe Fittings
AWWA C210	(1992) Liquid-Epoxy Coating Systems for the Interior and Exterior of Steel Water Pipelines
AWWA C300	(1989) Reinforced Concrete Pressure Pipe, Steel-Cylinder Type, for Water and Other Liquids
AWWA C301	(1992) Prestressed Concrete Pressure Pipe, Steel-Cylinder Type, for Water and Other Liquids
AWWA C500	(1993; C500a) Metal-Seated Gate Valves for Water Supply Service
AWWA ANSI/AWWA C508	(1993; C508a) Swing-Check Valves for Waterworks Service, 2 In. (50 mm) Through 24 In. (600 mm) NPS
AWWA C600	(1993) Installation of Ductile-Iron Water Mains and Their Appurtenances
AWWA C900	(1989; C900a) Polyvinyl Chloride (PVC) Pressure Pipe, 4 In. Through 12 In., for Water Distribution

DUCTILE IRON PIPE RESEARCH ASSOCIATION (DIPRA)

DIPRA-01	(1997) Thrust Restraint Design for Ductile Iron Pipe

MANUFACTURERS STANDARDIZATION SOCIETY OF THE VALVE AND FITTINGS INDUSTRY (MSS)

MSS SP-78	(1987; R 1992) Cast Iron Plug Valves, Flanged and Threaded Ends

1.2 SUBMITTALS

Government approval is required for submittals with a "G" designation; submittals not having a "G" designation are for information only. When used, a designation following the "G" designation identifies the office that will review the submittal for the Government. The following shall be submitted in accordance with Section 01330 SUBMITTAL PROCEDURES:

SD-06 TestReports

Hydrostatic Tests

Copies of test results.

1.3 DELIVERY AND STORAGE

Pipe, fittings and accessories, and pipe coatings shall not be damaged

during delivery, handling, and storage.

PART 2 PRODUCTS

2.1 PIPE AND FITTINGS

Piping for force mains less than 4 inches in diameter shall be galvanized steel, polyvinyl chloride (PVC) plastic, polyethylene (PE) plastic or polypropylene plastic. Piping less than 4 inches in diameter inside pump stations shall be galvanized steel. Piping for force mains 4 inches in diameter and larger shall be ductile iron, steel, concrete pressure pipe, PVC plastic, Oriented PVC PE plastic, or reinforced thermosetting resin pipe (RTRP). Piping 8 inches in diameter and larger may also be reinforced plastic mortar pressure (RPMP) pipe. Piping 4 inches in diameter and larger inside pump stations shall be ductile iron pipe with bolted flange joints. Pipe shall conform to the respective specifications and other requirements specified below.

2.1.1 Concrete Pressure Pipe

Concrete pressure pipe and fittings shall conform to AWWA C300, or AWWA C301, as applicable for the service requirements, with rubber gasket joints of the type using steel bell and spigot joint rings.

2.1.2 Plastic Pipe

2.1.2.1 PE Pipe

ASTM D 3350 and ASTM D 3035, minimum pressure rating of 100 psi at 73.4 degrees F.

2.1.2.2 Polypropylene Pipe

ASTM D 2122 and ASTM D 4101.

2.1.2.3 PVC Pipe

a. PVC Pipe and Fittings Less Than 4 inches Diameter: ASTM D 1785, Schedule 80, or ASTM D 2241, SDR 26, with screw joints, push-on joints, or solvent weld joints.

b. PVC Pipe and Fittings 4 inches Diameter and Larger: ASTM D 2241, SDR 26, or AWWA C900, Class 150, with push-on joints.

2.1.2.4 Oriented Polyvinyl Chloride (PVCO) Plastic Pipe

Pipe, couplings, and fittings shall be manufactured of material conforming to ASTM D 1784, Class 1245B. Pipe shall conform to AWWA C900, Class 150, and to ASTM F 1483 and shall have an outside diameter equal to cast iron outside diameter.

2.1.3 RPMP Pipe

ASTM D 3517. Fittings shall be compatible with the pipe supplied and shall be suitable for working and testing pressures specified for the pipe.

2.1.4 RTRP Lines

ASTM D 2996, 350 psi rated, cast iron pipe dimensions only, with

elastomeric gasket joints. Fittings: AWWA ANSI/AWWA C110/A21.10, rated 150 psi. When mechanical joint fittings are used, inside sleeves provided by the manufacturer shall be used.

2.1.5 Ductile Iron Pipe

a. Ductile Iron Pipe: AWWA ANSI/AWWA C151/A21.51, working pressure not less than 150 psi, unless otherwise shown or specified.

b. Fittings, Mechanical: AWWA ANSI/AWWA C110/A21.10, rated for 150 psi.

c. Fittings, Push-On: AWWA ANSI/AWWA C110/A21.10 and AWWA ANSI/AWWA C111/A21.11, rated for 150 psi.

2.1.6 Steel Pipe

a. Steel Pipe, 6 inches Diameter and Larger: AWWA C200.

b. Steel Pipe Less Than 6 inches Diameter: ASTM A 53, standard weight, threaded end, galvanized.

c. Fittings, 6 inches Diameter and Larger: AWWA C200, fabricated in compliance with AWWA ANSI/AWWA C208.

d. Fittings Less Than 6 inches Diameter: ASME B16.3, galvanized.

2.2 JOINTS

2.2.1 PE Piping

a. Heat Fusion Joints: ASTM D 2657.

b. Flanged Joints: ASME B16.1 or AWWA C207.

c. Mechanical Joints: ASME B16.1.

2.2.2 Polypropylene Piping

Heat Fusion Joints: ASTM D 2657.

2.2.3 PVC Piping

a. Screw Joint Fittings: ASTM D 2464, Schedule 80.

b. Push-On Joint Fittings: ASTM D 3139, with ASTM F 477gaskets.

c. Solvent Cement: ASTM D 2564.

d. Couplings for use with plain end pipe shall have centering rings or stops to ensure the coupling is centered on the joint.

2.2.4 PVCO Pipe

Joints shall conform to ASTM D 3139. Elastomeric gaskets shall conform to ASTM F 477.

2.2.5 Ductile Iron Piping

a. Push-on Joints: AWWA ANSI/AWWA C111/A21.11.

b. Mechanical Joints: AWWA ANSI/AWWA C111/A21.11 as modified by AWWA ANSI/AWWA C151/A21.51.

c. Flanged Joints: AWWA ANSI/AWWA C115/A21.15.

2.2.6 Steel Piping

a. Push-on Joints: AWWA C200.

b. Mechanical Joints: AWWA C200.

c. Flanged Joints: AWWA C207.

2.3 VALVES

2.3.1 Gate Valves

Gate valves 3 inches and larger shall comply with AWWA C500. Valves for buried service shall be non-rising stem (NRS), 2 inch square nut operated with joints applicable to the pipe or installation. Buried valves shall be furnished with extension stems comprising socket, extension stem and operating nut, and shall be of an appropriate length to bring operating nut to within 6 inches of grade. One 4 foot "T" handle valve wrench shall be furnished for each quantity of 6 buried valves. Gate valves that are exposed or installed inside shall be outside screw and yoke (OS&Y), handwheel operated with flange ends unless otherwise indicated. Gate valve operating nuts and handwheels shall have an arrow and the word "OPEN" cast in raised letters to indicate the direction of opening. Gate valves 14 inches and larger shall be equipped with gearing to reduce operating effort. Gate valves 14 inches and larger installed in horizontal lines in horizontal position with stems horizontal shall be equipped with bronze track, roller and scrapers to support the weight of the gate for its full length of travel. Gate valves 14 inches and larger installed in vertical pipe lines with stems horizontal shall be fitted with slides to assist the travel of the gate assembly.

2.3.2 Check Valves

Check valves shall permit free flow of sewage forward and provide a positive check against backflow. Check valves shall be designed for a minimum working pressure of 150 psi or as indicated. The body shall be iron. The manufacturer's name, initials, or trademark and also the size of the valve, working pressure, and direction of flow shall be directly cast on the body.

a. Ball Check Valves shall be iron body, shall have flanged ends, and shall be the non-slam type. Flanges shall be the 125 pound type complying with ASME B16.1. Ball shall be stainless steel unless otherwise specified.

b. Swing Check Valves shall comply with AWWA ANSI/AWWA C508 and shall be iron body, bronze mounted, and shall have flanged ends. Flanges shall be the 125 pound type complying with ASME B16.1.

2.3.3 Plug Valves

Cast iron valves shall comply with MSS SP-78. Steel plug valves shall comply with API Spec 6D.

2.3.4 Pinch Valves

Pinch valves shall be double acting, jam-proof type with unobstructed streamlined flows and built-in operator. The body shall be iron with a non-rising handwheel. The sleeve shall be of pure gum rubber, neoprene, Buna N or hypalon as required for service. The valve shall have flanged ends. Flanges shall be of the 125 pound type complying with ASME B16.1.

2.3.5 Air Release Valves

Air release valves shall be designed to permit release of air from an empty pipe during filling and shall be capable of discharging accumulated air in the line while the line is in operation and under pressure. Valves shall be attached by means of threaded pipe connections. Valves shall be vented to the atmosphere.

a. Manual Air Release Valves: Manual air release valves shall consist of a 3 inch gate valve and 3 inch ductile iron pipe and fittings. The valve shall be installed with its line of flow in the horizontal position.

b. Automatic Air Release Valve: Automatic air release valves shall be of the compound lever type capable of withstanding operating pressures of 150 psi. The valves shall have a 1/2 inch outlet. The body and cover of the valve shall be of iron with a stainless steel float. All internal parts shall be stainless steel or bronze. The valve shall be specifically adapted for use with sewage. Each valve shall be complete with hose and blow-off valves to permit backflushing without dismantling the valve.

2.4 VALVE BOXES

Valve boxes shall be cast iron or concrete, except that concrete boxes may be installed only in locations not subject to vehicular traffic. Cast iron boxes shall be the extension type with slide type adjustment and with flared base. The minimum thickness of metal shall be 3/16 inch. The box length shall be adaptable, without full extension, to the depth of cover over the pipe at the valve locations. Concrete boxes shall be the standard product of a manufacturer of precast concrete equipment. The word "SEWER" shall be cast in the cover.

2.5 VALVE VAULTS

Valve vaults shall be precast concrete units conforming to ASTM C 478.

2.6 MISCELLANEOUS MATERIALS

Miscellaneous materials shall comply with the following requirements:

2.6.1 Pipe Coatings and Linings

a. Steel, interior: AWWA C203 or AWWA C210.

b. Steel, exterior, buried: AWWA C203.

c. Steel, exterior, exposed: AWWA C210.

2.6.2 Joint Lubricants

Joint lubricants shall be as recommended by the pipe manufacturer.

2.6.3 Bolts, Nuts and Glands

AWWA ANSI/AWWA C111/A21.11.

2.6.4 Joint Compound

A stiff mixture of graphite and oil or inert filler and oil.

2.6.5 Joint Tape

ASTM D 3308.

2.6.6 Bond Wire

Bond wire type RHW or USE, Size 1/0 AWG, neoprene jacketed copper conductor shaped to stand clear of the joint.

PART 3 EXECUTION

3.1 INSTALLATION

Pipe, pipe fittings, and appurtenances shall be installed at the locations indicated. Excavation, trenching, and backfilling shall be as specified in Section 02316 EXCAVATION, TRENCHING AND BACKFILLING FOR UTILITIES SYSTEMS.

3.1.1 Adjacent Facilities

Installation of force mains and inverted siphons near adjacent facilities shall be as specified in Section 02531 SANITARY SEWERS.

3.1.2 Cutting

Pipe shall be cut in a neat manner with mechanical cutters. Wheel cutters shall be used where practicable. Sharp and rough edges shall be ground smooth and loose material removed from the pipe before laying.

3.1.3 Laying

Except where otherwise authorized, pipe shall be laid with bells facing the direction of laying. Before lowering and while suspended, the pipe shall be inspected for defects. Defective material shall be rejected. Pipe shall be laid in compliance with the following:

a. Ductile Iron: AWWA C600.

b. Steel: AWWA C600.

c. Concrete: Manufacturer's instructions.

d. Polyvinyl Chloride: Manufacturer's instructions.

e. Polyethylene: ASTM D 2774.

f. Polypropylene: ASTM D 2774.

g. Reinforced Thermosetting Resin: Manufacturer's instructions.

h. Reinforced Plastic Mortar: Manufacturer's Instructions.

3.1.4 Jointing

3.1.4.1 Concrete Pressure Pipe

The manufacturer's instructions shall be followed when lubricating and installing rubber gaskets. Joints shall comply with the manufacturer's instructions. The external annular space shall be filled with cement mortar or with a portland cement-filled polyurethane loop. For pipe 24 inch diameter and larger, the internal annular space shall be filled with cement mortar and struck off to ensure a smooth and continuous surface between pipe sections. Pipe less than 24 inch diameter shall have a rope or trowelable mastic affixed to the concrete face of the bell socket before joining the sections of pipe. The mastic shall not be detrimental to the rubber gasket and shall fill the interior annular space when the pipe sections are pushed together.

3.1.4.2 Joints for PE Pipe

Heat fusion joints shall comply with the manufacturer's instructions concerning equipment, temperature, melt time, heat coat, and joining time. Flanged and mechanical joints shall be made in compliance with the manufacturer's instructions.

3.1.4.3 Joints for Polypropylene Pipe

Heat fusion joints shall comply with the manufacturer's instructions concerning equipment, temperature, melt time, heat coat, and joining time.

3.1.4.4 Joints for PVC Pipe

a. Threaded joints shall be made by wrapping the male threads with joint tape or by applying an approved thread lubricant, then threading the joining members together. The joint shall be tightened with strap wrenches which will not damage the pipe and fittings. The joint shall be tightened no more than 2 threads past hand-tight.

b. Push-on joints: The ends of pipe for push-on joints shall be beveled to facilitate assembly. Pipe shall be marked to indicate when the pipe is fully seated. The gasket shall be lubricated to prevent displacement. The gasket shall remain in proper position in the bell or coupling while the joint is made.

c. Solvent-weld joints shall comply with the manufacturer's instructions.

3.1.4.5 Joints for RPMP Pipe

Elastomeric gasket joints shall comply with the manufacturer's instructions.

3.1.4.6 Joints for RTRP Lines

Elastomeric gasket joints shall comply with the manufacturer's instructions.

3.1.4.7 Joints for Ductile Iron Pipe

Installation of mechanical and push-on type joints shall comply with AWWA C600 and the manufacturer's instructions. Installation of flanged joints shall comply with manufacturer's instructions.

3.1.4.8 Joints for Steel Pipe

Screw joints shall be made tight with joint tape or joint compound applied with a brush to the male threads only. Installation of mechanical joints, push-on joints, and flanged joints shall comply with the manufacturer's instructions.

3.1.5 Coating and Lining

Field coating of non-galvanized steel pipe shall comply with AWWA C203. The applied materials shall be tested by means of a spark-type electrical device in compliance with AWWA C203. Flaws and holidays in the coating or lining of the pipe and the pipe joints shall be repaired; the repaired areas shall be at least equal in thickness to the minimum required for the pipe.

3.1.6 Installation of Valves

Prior to installation, valves shall be cleaned of all foreign matter and inspected for damage. Valves shall be fully opened and closed to ensure that all parts are properly operating. Valves shall be installed with the stem in the vertical position. Valves shall be installed in valve vaults as indicated.

3.1.7 Installation of Valve Boxes

Valve boxes shall be installed over each outside gate valve, unless otherwise indicated. Valve boxes shall be centered over the valve. Fill shall be carefully tamped around each valve box to a distance of 4 feet on all sides or to undisturbed trench face, if less than 4 feet.

3.1.8 Installation of Valve Vaults

Valve vaults shall be installed as indicated.

3.1.9 Drain Lines

Drain lines shall be installed where indicated. The drain line shall consist of a tee in the main line with a 4 inch diameter branch, a 4 inch diameter elbow, and a 4 inch gate valve.

3.1.10 Thrust Restraint

Thrust Restraint shall be as specified in Section 02510A WATER DISTRIBUTION SYSTEM. Plugs, caps, tees and bends deflecting 11-1/4 degrees or more, either vertically or horizontally, shall be provided with thrust restraint. Valves shall be securely anchored or shall be provided with thrust restraints to prevent movement. Thrust restraints shall be either thrust blocks or, for ductile-iron pipes, restrained joints.

3.1.10.1 Thrust Blocks

Thrust blocking shall be concrete of a mix not leaner than: 1 cement, 2-1/2 sand, 5 gravel; and having a compressive strength of not less than 2000 psi after 28 days. Blocking shall be placed between solid ground and the fitting to be anchored. Unless otherwise indicated or directed, the base and thrust bearing sides of thrust blocks shall be poured directly against undisturbed earth. The sides of thrust blocks not subject to thrust may be poured against forms. The area of bearing shall be as shown or as directed. Blocking shall be placed so that the fitting joints will be accessible for repair. Steel rods and clamps, protected by galvanizing or by coating with bituminous paint, shall be used to anchor vertical down bends into gravity thrust blocks.

3.1.10.2 Restrained Joints

For ductile iron pipe, restrained joints shall be designed by the Contractor or the pipe manufacturer in accordance with DIPRA-01.

3.1.11 Grout

Grout for exterior joint protection on concrete pipes shall be a mix of 1 part portland cement, 2 parts sand, and of sufficient liquid consistency to flow into the joint recess beneath the diaper. Grout for interior joint protection shall be a mix of 1 part portland cement and 1 part sand. A polyurethane foam loop, impregnated with portland cement, may be substituted for grout for exterior joints.

3.1.12 Bonded Joints

Where indicated, a metallic bond shall be provided at each joint, including joints made with flexible couplings or rubber gaskets, of ferrous-metallic piping to effect continuous conductivity. The bond shall be of the thermal-weld type.

3.2 HYDROSTATIC TESTS

The pipeline shall be subjected to both a pressure test and a leakage test. The method proposed for disposal of waste water from hydrostatic tests shall be approved by the Contracting Officer. Testing shall be the responsibility of the Contractor. Testing shall be performed by an approved independent testing laboratory or by the Contractor subject to approval. The test may be witnessed by the Contracting Officer. The Contracting Officer shall be notified at least 7 days in advance of equipment tests. The final test report shall be delivered to the Contracting Officer within 30 days of the test.

3.2.1 Pressure Test

After the pipe has been installed, joints completed, thrust blocks have been in place for at least five days, and the trench has been partially backfilled, leaving the joints exposed for examination, the pipe shall be filled with water to expel all air. The pipeline shall be subjected to a test pressure of 100 psi or 150 percent of the working pressure, whichever is greater, for a period of at least one hour. Each valve shall be opened and closed several times during the test. The exposed pipe, joints, fitting, and valves shall be examined for leaks. Visible leaks shall be stopped or the defective pipe, fitting, joints, or valve shall be replaced.

3.2.2 Leakage Test

The leakage test may be conducted subsequent to or concurrently with the pressure test. The amount of water permitted as leakage for the line shall be placed in a sealed container attached to the supply side of the test pump. No other source of supply will be permitted to be applied to the pump or line under test. The water shall be pumped into the line by the test pump as required to maintain the specified test pressure as described for pressure test for a 2 hour period. Exhaustion of the supply or the inability to maintain the required pressure will be considered test failure. PE pipe can experience diametric expansion and pressure elongation during initial testing. The manufacturer shall be consulted prior to testing for special testing considerations. Allowable leakage shall be determined by the following I-P formula:

$L = NDP/K$ Where:

L = Allowable leakage in gallons per hour.

N = Number of joints in length of pipeline tested.

D = Nominal diameter of the pipe in inches.

P = Square root of the test pressure in psig.

K = 7400 for pipe materials.

At the conclusion of the test, the amount of water remaining in the container shall be measured and the results recorded in the test report.

3.2.3 Retesting

If any deficiencies are revealed during any test, such deficiencies shall be corrected and the tests shall be reconducted until the results of the tests are within specified allowances, without additional cost to the Government.

-- End of Section --

SECTION TABLE OF CONTENTS

DIVISION 02 - SITE CONSTRUCTION

SECTION 02722A

AGGREGATE AND/OR GRADED-CRUSHED AGGREGATE BASE COURSE

05/01

PART 1 GENERAL

1.1 REFERENCES
1.2 DEFINITIONS
1.2.1 Aggregate Base Course
1.2.2 Degree of Compaction
1.3 SUBMITTALS
1.4 SAMPLING AND TESTING
1.4.1 Sampling
1.4.2 Tests
1.4.2.1 Sieve Analysis
1.4.2.2 Liquid Limit and Plasticity Index
1.4.2.3 Moisture-Density Determinations
1.4.2.4 Field Density Tests
1.4.2.5 Wear Test
1.4.2.6 Weight of Slag
1.4.3 Testing Frequency
1.4.3.1 Initial Tests
1.4.3.2 In Place Tests
1.4.4 Approval of Material
1.5 WEATHER LIMITATIONS
1.6 PLANT, EQUIPMENT, AND TOOLS

PART 2 PRODUCTS

2.1 AGGREGATES
2.1.1 Coarse Aggregate
2.1.1.1 Aggregate Base Course
2.1.2 Fine Aggregate
2.1.2.1 Aggregate Base Course
2.1.3 Gradation Requirements
2.1.4 Liquid Limit and Plasticity Index

PART 3 EXECUTION

3.1 GENERAL REQUIREMENTS
3.2 STOCKPILING MATERIAL
3.3 PREPARATION OF UNDERLYING COURSE
3.4 INSTALLATION
3.4.1 Mixing the Materials
3.4.2 Placing
3.4.3 Grade Control
3.4.4 Edges of Base Course
3.4.5 Compaction
3.4.6 Thickness
3.4.7 Finishing
3.4.8 Smoothness
3.5 TRAFFIC

3.6 MAINTENANCE
3.7 DISPOSAL OF UNSATISFACTORY MATERIALS

-- End of Section Table of Contents --

UFGS-02722A (May 2001)

SECTION 02722A

AGGREGATE AND/OR GRADED-CRUSHED AGGREGATE BASE COURSE
05/01

PART 1 GENERAL

1.1 REFERENCES

The publications listed below form a part of this specification to the extent referenced. The publications are referred to in the text by basic designation only.

AMERICAN SOCIETY FOR TESTING AND MATERIALS (ASTM)

ASTM C 29/C 29M	(1997) Bulk Density ("Unit Weight") and Voids in Aggregates
ASTM C 117	(1995) Materials Finer Than 75 micrometer (No. 200) Sieve in Mineral Aggregates by Washing
ASTM C 127	(1988; R 1993el) Specific Gravity and Absorption of Course Aggregate
ASTM C 128	(1997) Specific Gravity and Absorption of Fine Aggregate
ASTM C 131	(1996) Resistance to Degradation of Small-Size Coarse Aggregate by Abrasion and Impact in the Los Angeles Machine
ASTM C 136	(1996a) Sieve Analysis of Fine and Coarse Aggregates
ASTM D 75	(1987; R 1997) Sampling Aggregates
ASTM D 1556	(2000) Density and Unit Weight of Soil in Place by the Sand-Cone Method
ASTM D 1557	(1991; R 1998) Laboratory Compaction Characteristics of Soil Using Modified Effort (56,000 ft-lbf/cu. ft. (2,700 kN-m/cu.m.))
ASTM D 2167	(1994) Density and Unit Weight of Soil in Place by the Rubber Balloon Method
ASTM D 2487	(2000) Classification of Soils for Engineering Purposes (Unified Soil Classification System)
ASTM D 2922	(1996el) Density of Soil and Soil-Aggregate in Place by Nuclear Methods

	(Shallow Depth)
ASTM D 3017	(1988; R 1996el) Water Content of Soil and Rock in Place by Nuclear Methods (Shallow Depth)
ASTM D 4318	(2000) Liquid Limit, Plastic Limit, and Plasticity Index of Soils
ASTM E 11	(1995) Wire-Cloth Sieves for Testing Purposes

1.2 DEFINITIONS

For the purposes of this specification, the following definitions apply.

1.2.1 Aggregate Base Course

Aggregate base course (ABC) is well graded, durable aggregate uniformly moistened and mechanically stabilized by compaction.

1.2.2 Degree of Compaction

Degree of compaction shall be expressed as a percentage of the maximum density obtained by the test procedure presented in ASTM D 1557.

1.3 SUBMITTALS

Government approval is required for submittals with a "G" designation; submittals not having a "G" designation are for information only. When used, a designation following the "G" designation identifies the office that will review the submittal for the Government. The following shall be submitted in accordance with Section 01330 SUBMITTAL PROCEDURES:

SD-03 Product Data

Plant, Equipment, and Tools

List of proposed equipment to be used in performance of construction work, including descriptive data.

Waybills and Delivery Tickets

Copies of waybills and delivery tickets during the progress of the work. Before the final statement is allowed, the Contractor shall file certified waybills and certified delivery tickets for all aggregates actually used.

SD-06 Test Reports

Sampling and testing
Field Density Tests

Calibration curves and related test results prior to using the device or equipment being calibrated. Copies of field test results within 24 hours after the tests are performed. Certified copies of test results for approval not less than 30 days before material is required for the work.

1.4 SAMPLING AND TESTING

Sampling and testing shall be the responsibility of the Contractor. Sampling and testing shall be performed by a testing laboratory approved in accordance with Section 01451 CONTRACTOR QUALITY CONTROL. Work requiring testing will not be permitted until the testing laboratory has been inspected and approved. The materials shall be tested to establish compliance with the specified requirements; testing shall be performed at the specified frequency. The Contracting Officer may specify the time and location of the tests. Copies of test results shall be furnished to the Contracting Officer within 24 hours of completion of the tests.

1.4.1 Sampling

Samples for laboratory testing shall be taken in conformance with ASTM D 75. When deemed necessary, the sampling will be observed by the Contracting Officer.

1.4.2 Tests

The following tests shall be performed in conformance with the applicable standards listed.

1.4.2.1 Sieve Analysis

Sieve analysis shall be made in conformance with ASTM C 117 and ASTM C 136. Sieves shall conform to ASTM E 11.

1.4.2.2 Liquid Limit and Plasticity Index

Liquid limit and plasticity index shall be determined in accordance with ASTM D 4318.

1.4.2.3 Moisture-Density Determinations

The maximum density and optimum moisture content shall be determined in accordance with ASTM D 1557.

1.4.2.4 Field Density Tests

Density shall be field measured in accordance with ASTM D 1556, ASTM D 2167 or ASTM D 2922. For the method presented in ASTM D 1556 the base plate as shown in the drawing shall be used. For the method presented in ASTM D 2922 the calibration curves shall be checked and adjusted if necessary using only the sand cone method as described in paragraph Calibration, of the ASTM publication. Tests performed in accordance with ASTM D 2922 result in a wet unit weight of soil and when using this method, ASTM D 3017 shall be used to determine the moisture content of the soil. The calibration curves furnished with the moisture gauges shall also be checked along with density calibration checks as described in ASTM D 3017. The calibration checks of both the density and moisture gauges shall be made by the prepared containers of material method, as described in paragraph Calibration of ASTM D 2922, on each different type of material being tested at the beginning of a job and at intervals as directed.

1.4.2.5 Wear Test

Wear tests shall be made on ABC course material in conformance with ASTM C 131.

1.4.2.6 Weight of Slag

Weight per cubic foot of slag shall be determined in accordance with ASTM C 29/C 29M on the ABC course material.

1.4.3 Testing Frequency

1.4.3.1 Initial Tests

One of each of the following tests shall be performed on the proposed material prior to commencing construction to demonstrate that the proposed material meets all specified requirements when furnished. If materials from more than one source are going to be utilized, this testing shall be completed for each source.

a. Sieve Analysis including No. 635 size material.

b. Liquid limit and plasticity index.

c. Moisture-density relationship.

d. Wear.

e. Weight per cubic foot of Slag.

1.4.3.2 In Place Tests

Each of the following tests shall be performed on samples taken from the placed and compacted ABC. Samples shall be taken and tested at the rates indicated.

a. Density tests shall be performed on every lift of material placed and at a frequency of one set of tests for every 250 square yards, or portion thereof, of completed area.

b. Sieve Analysis including No. 635 size material shall be performed for every 500 tons, or portion thereof, of material placed.

c. Liquid limit and plasticity index tests shall be performed at the same frequency as the sieve analysis.

1.4.4 Approval of Material

The source of the material shall be selected 30 days prior to the time the material will be required in the work. Tentative approval of material will be based on initial test results. Final approval of the materials will be based on sieve analysis, liquid limit, and plasticity index tests performed on samples taken from the completed and fully compacted ABC.

1.5 WEATHER LIMITATIONS

Construction shall be done when the atmospheric temperature is above 35 degrees F. When the temperature falls below 35 degrees F, the Contractor shall protect all completed areas by approved methods against detrimental effects of freezing. Completed areas damaged by freezing, rainfall, or other weather conditions shall be corrected to meet specified requirements.

1.6 PLANT, EQUIPMENT, AND TOOLS

All plant, equipment, and tools used in the performance of the work will be subject to approval before the work is started and shall be maintained in satisfactory working condition at all times. The equipment shall be adequate and shall have the capability of producing the required compaction, meeting grade controls, thickness control, and smoothness requirements as set forth herein.

PART 2 PRODUCTS

2.1 AGGREGATES

The ABC shall consist of clean, sound, durable particles of crushed stone, crushed slag, crushed gravel, crushed recycled concrete, angular sand, or other approved material. ABC shall be free of lumps of clay, organic matter, and other objectionable materials or coatings. The portion retained on the No. 4 sieve shall be known as coarse aggregate; that portion passing the No. 4 sieve shall be known as fine aggregate.

2.1.1 Coarse Aggregate

Coarse aggregates shall be angular particles of uniform density. When the coarse aggregate is supplied from more than one source, aggregate from each source shall meet the specified requirements and shall be stockpiled separately.

a. Crushed Gravel: Crushed gravel shall be manufactured by crushing gravels, and shall meet all the requirements specified below.

b. Crushed Stone: Crushed stone shall consist of freshly mined quarry rock, and shall meet all the requirements specified below.

c. Crushed Recycled Concrete: Crushed recycled concrete shall consist of previously hardened portland cement concrete or other concrete containing pozzolanic binder material. The recycled material shall be free of all reinforcing steel, bituminous concrete surfacing, and any other foreign material and shall be crushed and processed to meet the required gradations for coarse aggregate. Crushed recycled concrete shall meet all other applicable requirements specified below.

d. Crushed Slag: Crushed slag shall be an air-cooled blast-furnace product having an air dry unit weight of not less than 65 pcf as determined by ASTM C 29/C 29M, and shall meet all the requirements specified below.

2.1.1.1 Aggregate Base Course

ABC coarse aggregate shall not show more than 50 percent loss when subjected to the Los Angeles abrasion test in accordance with ASTM C 131. The amount of flat and elongated particles shall not exceed 30 percent. A flat particle is one having a ratio of width to thickness greater than 3; an elongated particle is one having a ratio of length to width greater than 3. In the portion retained on each sieve specified, the crushed aggregates shall contain at least 50 percent by weight of crushed pieces having two or more freshly fractured faces with the area of each face being at least equal to 75 percent of the smallest midsectional area of the piece. When two fractures are contiguous, the angle between planes of the fractures must be at least 30 degrees in order to count as two fractured faces. Crushed gravel shall be manufactured from gravel particles 50 percent of

which, by weight, are retained on the maximum size sieve listed in TABLE 1.

2.1.2 Fine Aggregate

Fine aggregates shall be angular particles of uniform density. When the fine aggregate is supplied from more than one source, aggregate from each source shall meet the specified requirements.

2.1.2.1 Aggregate Base Course

ABC fine aggregate shall consist of screenings, angular sand, crushed recycled concrete fines, or other finely divided mineral matter processed or naturally combined with the coarse aggregate.

2.1.3 Gradation Requirements

The specified gradation requirements shall apply to the completed base course. The aggregates shall have a maximum size of 1.5 inches and shall be continuously well graded within the limits specified in TABLE 1. Sieves shall conform to ASTM E 11.

TABLE I. GRADATION OF AGGREGATES

Percentage by Weight Passing Square-Mesh Sieve

Sieve Designation	No. 2	No. 3
2 inch	----	----
1-1/2 inch	100	----
1 inch	60-100	100
1/2 inch	30-65	40-70
No. 4	20-50	20-50
No. 10	15-40	15-40
No. 40	5-25	5-25
No. 200	0-8	0-8

NOTE 1: Particles having diameters less than 0.0008 inch shall not be in excess of 3 percent by weight of the total sample tested.

NOTE 2: The values are based on aggregates of uniform specific gravity. If materials from different sources are used for the coarse and fine aggregates, they shall be tested in accordance with ASTM C 127 and ASTM C 128 to determine their specific gravities. If the specific gravities vary by more than 10 percent, the percentages passing the various sieves shall be corrected as directed by the Contracting Officer.

2.1.4 Liquid Limit and Plasticity Index

Liquid limit and plasticity index requirements shall apply to the completed course and shall also apply to any component that is blended to meet the required gradation. The portion of any component or of the completed course passing the No. 40 sieve shall be either nonplastic or have a liquid limit not greater than 25 and a plasticity index not greater than 5.

PART 3 EXECUTION

3.1 GENERAL REQUIREMENTS

When the ABC is constructed in more than one layer, the previously constructed layer shall be cleaned of loose and foreign matter by sweeping with power sweepers or power brooms, except that hand brooms may be used in areas where power cleaning is not practicable. Adequate drainage shall be provided during the entire period of construction to prevent water from collecting or standing on the working area. Line and grade stakes shall be provided as necessary for control. Grade stakes shall be in lines parallel to the centerline of the area under construction and suitably spaced for string lining.

3.2 STOCKPILING MATERIAL

Prior to stockpiling of material, storage sites shall be cleared and leveled by the Contractor. All materials, including approved material available from excavation and grading, shall be stockpiled in the manner and at the locations designated. Aggregates shall be stockpiled on the cleared and leveled areas designated by the Contracting Officer to prevent segregation. Materials obtained from different sources shall be stockpiled separately.

3.3 PREPARATION OF UNDERLYING COURSE

Prior to constructing the ABC, the underlying course or subgrade shall be cleaned of all foreign substances. At the time of construction of the ABC, the underlying course shall contain no frozen material. The surface of the underlying course or subgrade shall meet specified compaction and surface tolerances. The underlying course shall conform to Section 02300 EARTHWORK. Ruts or soft yielding spots in the underlying courses, areas having inadequate compaction, and deviations of the surface from the requirements set forth herein shall be corrected by loosening and removing soft or unsatisfactory material and by adding approved material, reshaping to line and grade, and recompacting to specified density requirements. For cohesionless underlying courses containing sands or gravels, as defined in ASTM D 2487, the surface shall be stabilized prior to placement of the ABC. Stabilization shall be accomplished by mixing ABC into the underlying course and compacting by approved methods. The stabilized material shall be considered as part of the underlying course and shall meet all requirements of the underlying course. The finished underlying course shall not be disturbed by traffic or other operations and shall be maintained by the Contractor in a satisfactory condition until the ABC is placed.

3.4 INSTALLATION

3.4.1 Mixing the Materials

The coarse and fine aggregates shall be mixed in a stationary plant, or in a traveling plant or bucket loader on an approved paved working area. The Contractor shall make adjustments in mixing procedures or in equipment as directed to obtain true grades, to minimize segregation or degradation, to obtain the required water content, and to insure a satisfactory ABC meeting all requirements of this specification.

3.4.2 Placing

The mixed material shall be placed on the prepared subgrade or subbase in layers of uniform thickness with an approved spreader. When a compacted layer 6 inches or less in thickness is required, the material shall be placed in a single layer. When a compacted layer in excess of 6 inches is required, the material shall be placed in layers of equal thickness. No layer shall exceed 6 inches or less than 3 inches when compacted. The layers shall be so placed that when compacted they will be true to the grades or levels required with the least possible surface disturbance. Where the ABC is placed in more than one layer, the previously constructed layers shall be cleaned of loose and foreign matter by sweeping with power sweepers, power brooms, or hand brooms, as directed. Such adjustments in placing procedures or equipment shall be made as may be directed to obtain true grades, to minimize segregation and degradation, to adjust the water content, and to insure an acceptable ABC.

3.4.3 Grade Control

The finished and completed ABC shall conform to the lines, grades, and cross sections shown. Underlying material(s) shall be excavated and prepared at sufficient depth for the required ABC thickness so that the finished ABC with the subsequent surface course will meet the designated grades.

3.4.4 Edges of Base Course

The ABC shall be placed so that the completed section will be a minimum of 1 feet wider, on all sides, than the next layer that will be placed above it. Additionally, approved fill material shall be placed along the outer edges of ABC in sufficient quantities to compact to the thickness of the course being constructed, or to the thickness of each layer in a multiple layer course, allowing in each operation at least a 2 foot width of this material to be rolled and compacted simultaneously with rolling and compacting of each layer of ABC. If this base course material is to be placed adjacent to another pavement section, then the layers for both of these sections shall be placed and compacted along this edge at the same time.

3.4.5 Compaction

Each layer of the ABC shall be compacted as specified with approved compaction equipment. Water content shall be maintained during the compaction procedure to within plus or minus 2 percent of the optimum water content determined from laboratory tests as specified in paragraph SAMPLING AND TESTING. Rolling shall begin at the outside edge of the surface and proceed to the center, overlapping on successive trips at least one-half the width of the roller. Alternate trips of the roller shall be slightly different lengths. Speed of the roller shall be such that displacement of the aggregate does not occur. In all places not accessible to the rollers, the mixture shall be compacted with hand-operated power tampers. Compaction shall continue until each layer has a degree of compaction that is at least 100 percent of laboratory maximum density through the full depth of the layer. The Contractor shall make such adjustments in compacting or finishing procedures as may be directed to obtain true grades, to minimize segregation and degradation, to reduce or increase water content, and to ensure a satisfactory ABC. Any materials that are found to be unsatisfactory shall be removed and replaced with satisfactory material or reworked, as directed, to meet the requirements of this

specification.

3.4.6 Thickness

Compacted thickness of the aggregate course shall be as indicated No individual layer shall exceed 8 inches nor be less than 3 inches in compacted thickness. The total compacted thickness of the ABC course shall be within 1/2 inch of the thickness indicated. Where the measured thickness is more than 1/2 inch deficient, such areas shall be corrected by scarifying, adding new material of proper gradation, reblading, and recompacting as directed. Where the measured thickness is more than 1/2 inch thicker than indicated, the course shall be considered as conforming to the specified thickness requirements. Average job thickness shall be the average of all thickness measurements taken for the job, but shall be within 1/4 inch of the thickness indicated. The total thickness of the ABC course shall be measured at intervals in such a manner as to ensure one measurement for each 500 square yards of base course. Measurements shall be made in 3 inch diameter test holes penetrating the base course.

3.4.7 Finishing

The surface of the top layer of ABC shall be finished after final compaction by cutting any overbuild to grade and rolling with a steel-wheeled roller. Thin layers of material shall not be added to the top layer of base course to meet grade. If the elevation of the top layer of ABC is 1/2 inch or more below grade, then the top layer should be scarified to a depth of at least 3 inches and new material shall be blended in and compacted to bring to grade. Adjustments to rolling and finishing procedures shall be made as directed to minimize segregation and degradation, obtain grades, maintain moisture content, and insure an acceptable base course. Should the surface become rough, corrugated, uneven in texture, or traffic marked prior to completion, the unsatisfactory portion shall be scarified, reworked and recompacted or it shall be replaced as directed.

3.4.8 Smoothness

The surface of the top layer shall show no deviations in excess of 3/8 inch when tested with a 10 foot straightedge. Measurements shall be taken in successive positions parallel to the centerline of the area to be paved. Measurements shall also be taken perpendicular to the centerline at 50 foot intervals. Deviations exceeding this amount shall be corrected by removing material and replacing with new material, or by reworking existing material and compacting it to meet these specifications.

3.5 TRAFFIC

Completed portions of the ABC course may be opened to limited traffic, provided there is no marring or distorting of the surface by the traffic. Heavy equipment shall not be permitted except when necessary to construction, and then the area shall be protected against marring or damage to the completed work.

3.6 MAINTENANCE

The ABC shall be maintained in a satisfactory condition until the full pavement section is completed and accepted. Maintenance shall include immediate repairs to any defects and shall be repeated as often as necessary to keep the area intact. Any ABC that is not paved over prior to the onset of winter, shall be retested to verify that it still complies

with the requirements of this specification. Any area of ABC that is damaged shall be reworked or replaced as necessary to comply with this specification.

3.7 DISPOSAL OF UNSATISFACTORY MATERIALS

Any unsuitable materials that must be removed shall be disposed of as directed. No additional payments will be made for materials that must be replaced.

-- End of Section --

SECTION TABLE OF CONTENTS

DIVISION 02 - SITE CONSTRUCTION

SECTION 02741A

HOT-MIX ASPHALT (HMA) FOR ROADS

09/99

PART 1 GENERAL

1.1 REFERENCES
1.2 DESCRIPTION OF WORK
1.3 SUBMITTALS
1.4 ASPHALT MIXING PLANT
1.5 HAULING EQUIPMENT
1.6 ASPHALT PAVERS
1.6.1 Receiving Hopper
1.7 ROLLERS
1.8 WEATHER LIMITATIONS

PART 2 PRODUCTS

2.1 AGGREGATES
2.1.1 Coarse Aggregate
2.1.2 Fine Aggregate
2.1.3 Mineral Filler
2.1.4 Aggregate Gradation
2.2 ASPHALT CEMENT BINDER
2.3 MIX DESIGN
2.3.1 JMF Requirements
2.3.2 Adjustments to Field JMF
2.4 RECYCLED HOT MIX ASPHALT
2.4.1 RAP Aggregates and Asphalt Cement
2.4.2 RAP Mix

PART 3 EXECUTION

3.1 PREPARATION OF ASPHALT BINDER MATERIAL
3.2 PREPARATION OF MINERAL AGGREGATE
3.3 PREPARATION OF HOT-MIX ASPHALT MIXTURE
3.4 PREPARATION OF THE UNDERLYING SURFACE
3.5 TESTING LABORATORY
3.6 TRANSPORTING AND PLACING
3.6.1 Transporting
3.6.2 Placing
3.7 COMPACTION OF MIXTURE
3.8 JOINTS
3.8.1 Transverse Joints
3.8.2 Longitudinal Joints
3.9 CONTRACTOR QUALITY CONTROL
3.9.1 General Quality Control Requirements
3.9.2 Quality Control Testing
3.9.2.1 Asphalt Content
3.9.2.2 Gradation
3.9.2.3 Temperatures
3.9.2.4 Aggregate Moisture

3.9.2.5 Moisture Content of Mixture
3.9.2.6 Laboratory Air Voids, Marshall Stability and Flow
3.9.2.7 In-Place Density
3.9.2.8 Grade and Smoothness
3.9.2.9 Additional Testing
3.9.2.10 QC Monitoring
3.9.3 Sampling
3.10 MATERIAL ACCEPTANCE
3.10.1 Sublot Sampling
3.10.2 Additional Sampling and Testing
3.10.3 Laboratory Air Voids
3.10.4 In-place Density
3.10.4.1 General Density Requirements
3.10.4.2 Mat and Joint Densities
3.10.5 Grade
3.10.6 Surface Smoothness
3.10.6.1 Smoothness Requirements
3.10.6.2 Testing Method
3.10.6.3 Payment Adjustment for Smoothness

-- End of Section Table of Contents --

UFGS-02741A (September 1999)

SECTION 02741A

HOT-MIX ASPHALT (HMA) FOR ROADS
09/99

PART 1 GENERAL

1.1 REFERENCES

The publications listed below form a part of this specification to the extent referenced. The publications are referred to in the text by basic designation only.

AMERICAN ASSOCIATION OF STATE HIGHWAY AND TRANSPORTATION OFFICIALS (AASHTO)

AASHTO MP 2	(1998; Interim 1999) Superpave Volumetric Mix Design
AASHTO TP53	(1998; Interim 1999) Determining Asphalt Content of Hot Mix Asphalt by the Ignition Method

AMERICAN SOCIETY FOR TESTING AND MATERIALS (ASTM)

ASTM C 29/C 29M	(1997) Bulk Density ("Unit Weight") and Voids in Aggregates
ASTM C 88	(1999a) Soundness of Aggregates by Use of Sodium Sulfate or Magnesium Sulfate
ASTM C 117	(1995) Materials Finer than 75 micrometer (No. 200) Sieve in Mineral Aggregates by Washing
ASTM C 131	(1996) Resistance to Degradation of Small-Size Coarse Aggregate by Abrasion and Impact in the Los Angeles Machine
ASTM C 136	(1996a) Sieve Analysis of Fine and Coarse Aggregates
ASTM C 566	(1997) Evaporable Total Moisture Content of Aggregate by Drying
ASTM C 1252	(1998) Uncompacted Void Content of Fine Aggregate (as Influenced by Particle Shape, Surface Texture, and Grading)
ASTM D 140	(1998) Sampling Bituminous Materials
ASTM D 242	(1995) Mineral Filler for Bituminous Paving Mixtures

ASTM D 995	(1995b) Mixing Plants for Hot-Mixed, Hot-Laid Bituminous Paving Mixtures
ASTM D 1461	(1985)) Moisture or Volatile Distillates in Bituminous Paving Mixtures
ASTM D 1559	(1989) Resistance to Plastic Flow of Bituminous Mixtures Using Marshall Apparatus
ASTM D 2041	(1995) Theoretical Maximum Specific Gravity and Density of Bituminous Paving Mixtures
ASTM D 2172	(1995) Quantitative Extraction of Bitumen from Bituminous Paving Mixtures
ASTM D 2419	(1995) Sand Equivalent Value of Soils and Fine Aggregate
ASTM D 2489	(1984; R 1994el) Degree of Particle Coating of Bituminous-Aggregate Mixtures
ASTM D 2726	(1996el) Bulk Specific Gravity and Density of Non-Absorptive Compacted Bituminous Mixture
ASTM D 2950	(1997) Density of Bituminous Concrete in Place by Nuclear Method
ASTM D 3381	(1999) Viscosity-Graded Asphalt Cement for Use in Pavement Construction
ASTM D 3665	(1999) Random Sampling of Construction Materials
ASTM D 3666	(1998) Minimum Requirements for Agencies Testing and Inspecting Bituminous Paving Materials
ASTM D 4125	(1994el)Asphalt Content of Bituminous Mixtures by the Nuclear Method
ASTM D 4791	(1999) Flat Particles, Elongated Particles, or Flat and Elongated Particles in Coarse Aggregate
ASTM D 4867/D 4867M	(1996) Effect of Moisture on Asphalt Concrete Paving Mixtures
ASTM D 5444	(1998) Mechanical Size Analysis of Extracted Aggregate
ASTM D 6307	(1998) Asphalt Content of Hot Mix Asphalt by Ignition Method

ASPHALT INSTITUTE (AI)

AI MS-02	(1997) Mix Design Methods for Asphalt

	Concrete and Other Hot-Mix Types
AI MS-22	(1998; 2nd Edition) Construction of Hot-Mix Asphalt Pavements

U.S. ARMY CORPS OF ENGINEERS (USACE)

COE CRD-C 171	(1995) Test Method for Determining Percentage of Crushed Particles in Aggregate

1.2 DESCRIPTION OF WORK

The work shall consist of pavement courses composed of mineral aggregate and asphalt material heated and mixed in a central mixing plant and placed on a prepared course. HMA designed and constructed in accordance with this section shall conform to the lines, grades, thicknesses, and typical cross sections shown on the drawings. Each course shall be constructed to the depth, section, or elevation required by the drawings and shall be rolled, finished, and approved before the placement of the next course.

1.3 SUBMITTALS

Government approval is required for submittals with a "G" designation; submittals not having a "G" designation are for information only. When used, a designation following the "G" designation identifies the office that will review the submittal for the Government. The following shall be submitted in accordance with Section 01330 SUBMITTAL PROCEDURES:

SD-03 Product Data

Mix Design; G, RO.

Proposed JMF.

Contractor Quality Control; G, RO.

Quality control plan.

Material Acceptance ; G, RO.

Acceptance test results.

SD-06 Test Reports

Aggregates; G, RO.

QC Monitoring.

Aggregate and QC test results.

SD-07 Certificates

Asphalt Cement Binder; G, RO.

Copies of certified test data.

Testing Laboratory.

Certification of compliance.

Plant Scale Calibration Certification

1.4 ASPHALT MIXING PLANT

Plants used for the preparation of hot-mix asphalt shall conform to the requirements of ASTM D 995 with the following changes:

a. Truck Scales. The asphalt mixture shall be weighed on approved certified scales at the Contractor's expense. Scales shall be inspected and sealed at least annually by an approved calibration laboratory.

b. Testing Facilities. The Contractor shall provide laboratory facilities at the plant for the use of the Government's acceptance testing and the Contractor's quality control testing.

c. Inspection of Plant. The Contracting Officer shall have access at all times, to all areas of the plant for checking adequacy of equipment; inspecting operation of the plant; verifying weights, proportions, and material properties; checking the temperatures maintained in the preparation of the mixtures and for taking samples. The Contractor shall provide assistance as requested, for the Government to procure any desired samples.

d. Storage Bins. Use of storage bins for temporary storage of hot-mix asphalt will be permitted as follows:

(1) The asphalt mixture may be stored in non-insulated storage bins for a period of time not exceeding 3 hours.

(2) The asphalt mixture may be stored in insulated storage bins for a period of time not exceeding 8 hours. The mix drawn from bins shall meet the same requirements as mix loaded directly into trucks.

1.5 HAULING EQUIPMENT

Trucks used for hauling hot-mix asphalt shall have tight, clean, and smooth metal beds. To prevent the mixture from adhering to them, the truck beds shall be lightly coated with a minimum amount of paraffin oil, lime solution, or other approved material. Petroleum based products shall not be used as a release agent. Each truck shall have a suitable cover to protect the mixture from adverse weather. When necessary to ensure that the mixture will be delivered to the site at the specified temperature, truck beds shall be insulated or heated and covers (tarps) shall be securely fastened.

1.6 ASPHALT PAVERS

Asphalt pavers shall be self-propelled, with an activated screed, heated as necessary, and shall be capable of spreading and finishing courses of hot-mix asphalt which will meet the specified thickness, smoothness, and grade. The paver shall have sufficient power to propel itself and the hauling equipment without adversely affecting the finished surface.

1.6.1 Receiving Hopper

The paver shall have a receiving hopper of sufficient capacity to permit a uniform spreading operation. The hopper shall be equipped with a distribution system to place the mixture uniformly in front of the screed without segregation. The screed shall effectively produce a finished surface of the required evenness and texture without tearing, shoving, or gouging the mixture.

1.7 ROLLERS

Rollers shall be in good condition and shall be operated at slow speeds to avoid displacement of the asphalt mixture. The number, type, and weight of rollers shall be sufficient to compact the mixture to the required density while it is still in a workable condition. Equipment which causes excessive crushing of the aggregate shall not be used.

1.8 WEATHER LIMITATIONS

The hot-mix asphalt shall not be placed upon a wet surface or when the surface temperature of the underlying course is less than specified in Table 1. The temperature requirements may be waived by the Contracting Officer, if requested; however, all other requirements, including compaction, shall be met.

Table 1. Surface Temperature Limitations of Underlying Course

Mat Thickness, inches	Degrees F
3 or greater	40
Less than 3	45

PART 2 PRODUCTS

2.1 AGGREGATES

Aggregates shall consist of crushed stone, crushed gravel, crushed slag, screenings, natural sand and mineral filler, as required. The portion of material retained on the No. 4 sieve is coarse aggregate. The portion of material passing the No. 4 sieve and retained on the No. 200 sieve is fine aggregate. The portion passing the No. 200 sieve is defined as mineral filler. All aggregate test results and samples shall be submitted to the Contracting Officer at least 14 days prior to start of construction.

2.1.1 Coarse Aggregate

Coarse aggregate shall consist of sound, tough, durable particles, free from films of material that would prevent thorough coating and bonding with the asphalt material and free from organic matter and other deleterious substances. All individual coarse aggregate sources shall meet the following requirements:

a. The percentage of loss shall not be greater than 40 percent after 500 revolutions when tested in accordance with ASTM C 131.

b. The percentage of loss shall not be greater than 18 percent after five cycles when tested in accordance with ASTM C 88 using magnesium sulfate or 12 percent when using sodium sulfate.

c. At least 75 percent by weight of coarse aggregate shall have at least two or more fractured faces when tested in accordance with COE CRD-C 171. Fractured faces shall be produced by crushing.

d. The particle shape shall be essentially cubical and the aggregate shall not contain more than 20% percent, by weight, of flat and elongated particles (3:1 ratio of maximum to minimum) when tested in accordance with ASTM D 4791.

e. Slag shall be air-cooled, blast furnace slag, and shall have a compacted weight of not less than 75 lb/cu ft when tested in accordance with ASTM C 29/C 29M.

2.1.2 Fine Aggregate

Fine aggregate shall consist of clean, sound, tough, durable particles. The aggregate particles shall be free from coatings of clay, silt, or any objectionable material and shall contain no clay balls. All individual fine aggregate sources shall have a sand equivalent value not less than 45 when tested in accordance with ASTM D 2419.

The fine aggregate portion of the blended aggregate shall have an uncompacted void content not less than 45 percent when tested in accordance with ASTM C 1252 Method A.

2.1.3 Mineral Filler

Mineral filler shall be nonplastic material meeting the requirements of ASTM D 242.

2.1.4 Aggregate Gradation

The combined aggregate gradation shall conform to gradations specified in Table 2, when tested in accordance with ASTM C 136 and ASTM C 117, and shall not vary from the low limit on one sieve to the high limit on the adjacent sieve or vice versa, but grade uniformly from coarse to fine.

Table 2. Aggregate Gradations

Sieve Size, inch	BINDER COURSE Gradation 1 Percent Passing by Mass	SURFACE COURSE Gradation 3 Percent Passing by Mass
1	100	---
3/4	76-96	---
1/2	68-88	100
3/8	60-82	76-96
No. 4	45-67	58-78
No. 8	32-54	40-60
No. 16	22-44	28-48
No. 30	15-35	18-38
No. 50	9-25	11-27
No. 100	6-18	6-18
No. 200	3-6	3-6

2.2 ASPHALT CEMENT BINDER

Asphalt cement binder shall conform to ASTM D 3381 Table 2, Viscosity Grade AC-20. Test data indicating grade certification shall be provided by the supplier at the time of delivery of each load to the mix plant. Copies of these certifications shall be submitted to the Contracting Officer. The supplier is defined as the last source of any modification to the binder. The Contracting Officer may sample and test the binder at the mix plant at any time before or during mix production. Samples for this verification testing shall be obtained by the Contractor in accordance with ASTM D 140 and in the presence of the Contracting Officer. These samples shall be furnished to the Contracting Officer for the verification testing, which shall be at no cost to the Contractor. Samples of the asphalt cement specified shall be submitted for approval not less than 14 days before start of the test section.

2.3 MIX DESIGN

The Contractor shall develop the mix design. The asphalt mix shall be composed of a mixture of well-graded aggregate, mineral filler if required, and asphalt material. The aggregate fractions shall be sized, handled in separate size groups, and combined in such proportions that the resulting mixture meets the grading requirements of the job mix formula (JMF). No hot-mix asphalt for payment shall be produced until a JMF has been approved. The hot-mix asphalt shall be designed using procedures contained in AI MS-02 and the criteria shown in Table 3. If the Tensile Strength Ratio (TSR) of the composite mixture, as determined by ASTM D 4867/D 4867M is less than 75, the aggregates shall be rejected or the asphalt mixture treated with an approved anti-stripping agent. The amount of anti-stripping agent added shall be sufficient to produce a TSR of not less than 75. If an antistrip agent is required, it shall be provided by the Contractor at no additional cost. Sufficient materials to produce 200 pound of blended mixture shall be provided to the Contracting Officer for verification of mix design at least 14 days prior to construction of test section.

At the option of the contractor a currently used DOT superpave hot mix may be used in lieu of developing a new hot mix design study as described herein. The superpave volumetric mix shall be designed in accordance with AASHTO MP 2.

2.3.1 JMF Requirements

The job mix formula shall be submitted in writing by the Contractor for approval at least 14 days prior to the start of the test section and shall include as a minimum:

a. Percent passing each sieve size.

b. Percent of asphalt cement.

c. Percent of each aggregate and mineral filler to be used.

d. Asphalt viscosity grade, penetration grade, or performance grade.

e. Number of blows of hammer per side of molded specimen.

f. Laboratory mixing temperature.

g. Lab compaction temperature.

h. Temperature-viscosity relationship of the asphalt cement.

i. Plot of the combined gradation on the 0.45 power gradation chart, stating the nominal maximum size.

j. Graphical plots of stability, flow, air voids, voids in the mineral aggregate, and unit weight versus asphalt content as shown in AI MS-02.

k. Specific gravity and absorption of each aggregate.

l. Percent natural sand.

m. Percent particles with 2 or more fractured faces (in coarse aggregate).

n. Fine aggregate angularity.

o. Percent flat or elongated particles (in coarse aggregate).

p. Tensile Strength Ratio(TSR).

q. Antistrip agent (if required) and amount.

r. List of all modifiers and amount.

s. Percentage and properties (asphalt content, binder properties, and aggregate properties) of reclaimed asphalt pavement (RAP) in accordance with paragraph RECYCLED HOT-MIX ASPHALT, if RAP is used.

Table 3. Marshall Design Criteria

Test Property	50 Blow Mix	
Stability, pounds minimum	*1000	
Flow, 0.01 inch	8-18	
Air voids, percent	3-5	
Percent Voids in mineral aggregate VMA, (minimum)		
Binder Course Gradation 1	13.0	13.0
Surface Course Gradation 3	15.0	15.0
TSR, minimum percent	75	75

* This is a minimum requirement. The average during construction shall be significantly higher than this number to ensure compliance with the specifications.

** Calculate VMA in accordance with AI MS-02, based on ASTM D 2726 bulk specific gravity for the aggregate.

2.3.2 Adjustments to Field JMF

The Laboratory JMF for each mixture shall be in effect until a new formula is approved in writing by the Contracting Officer. Should a change in sources of any materials be made, a new laboratory jmf design shall be performed and a new JMF approved before the new material is used. The Contractor will be allowed to adjust the Laboratory JMF within the limits specified below to optimize mix volumetric properties with the approval of the Contracting Officer. Adjustments to the Laboratory JMF shall be applied to the field (plant) established JMF and limited to those values as shown. Adjustments shall be targeted to produce or nearly produce 4 percent voids total mix (VTM).

TABLE 4. Field (Plant) Established JMF Tolerances

Sieves	Adjustments (plus or minus), percent
No. 4	3
No. 8	3
No. 200	1
Binder Content	0.40

If adjustments are needed that exceed these limits, a new mix design shall be developed. Tolerances given above may permit the aggregate grading to be outside the limits shown in Table 2; while not desirable, this is acceptable.

2.4 RECYCLED HOT MIX ASPHALT

Recycled HMA shall consist of reclaimed asphalt pavement (RAP), coarse aggregate, fine aggregate, mineral filler, and asphalt cement. The RAP shall be of a consistent gradation and asphalt content and properties. When RAP is fed into the plant, the maximum RAP chunk size shall not exceed 2 inches. The recycled HMA mix shall be designed using procedures contained in AI MS-02 and AI MS-22. The job mix shall meet the requirements of paragraph MIX DESIGN. The amount of RAP shall not exceed 30 percent.

2.4.1 RAP Aggregates and Asphalt Cement

The blend of aggregates used in the recycled mix shall meet the requirements of paragraph AGGREGATES. The percentage of asphalt in the RAP shall be established for the mixture design according to ASTM D 2172 using the appropriate dust correction procedure.

2.4.2 RAP Mix

The blend of new asphalt cement and the RAP asphalt binder shall meet the viscosity requirements in paragraph ASPHALT CEMENT BINDER. The virgin asphalt cement shall not be more than two standard asphalt material grades different than that specified in paragraph ASPHALT CEMENT BINDER.

PART 3 EXECUTION

3.1 PREPARATION OF ASPHALT BINDER MATERIAL

The asphalt cement material shall be heated avoiding local overheating and

providing a continuous supply of the asphalt material to the mixer at a uniform temperature. The temperature of unmodified asphalts shall be no more than 325 degrees F when added to the aggregates. Modified asphalts shall be no more than 350 degrees F when added to the aggregates.

3.2 PREPARATION OF MINERAL AGGREGATE

The aggregate for the mixture shall be heated and dried prior to mixing. No damage shall occur to the aggregates due to the maximum temperature and rate of heating used. The temperature of the aggregate and mineral filler shall not exceed 350 degrees F when the asphalt cement is added. The temperature shall not be lower than is required to obtain complete coating and uniform distribution on the aggregate particles and to provide a mixture of satisfactory workability.

3.3 PREPARATION OF HOT-MIX ASPHALT MIXTURE

The aggregates and the asphalt cement shall be weighed or metered and introduced into the mixer in the amount specified by the JMF. The combined materials shall be mixed until the aggregate obtains a uniform coating of asphalt binder and is thoroughly distributed throughout the mixture. Wet mixing time shall be the shortest time that will produce a satisfactory mixture, but no less than 25 seconds for batch plants. The wet mixing time for all plants shall be established by the Contractor, based on the procedure for determining the percentage of coated particles described in ASTM D 2489, for each individual plant and for each type of aggregate used. The wet mixing time will be set to at least achieve 95 percent of coated particles. The moisture content of all hot-mix asphalt upon discharge from the plant shall not exceed 0.5 percent by total weight of mixture as measured by ASTM D 1461.

3.4 PREPARATION OF THE UNDERLYING SURFACE

Immediately before placing the hot mix asphalt, the underlying course shall be cleaned of dust and debris. A prime coat and/or tack coat shall be applied in accordance with the contract specifications.

3.5 TESTING LABORATORY

The laboratory used to develop the JMF shall meet the requirements of ASTM D 3666. A certification signed by the manager of the laboratory stating that it meets these requirements or clearly listing all deficiencies shall be submitted to the Contracting Officer prior to the start of construction. The certification shall contain as a minimum:

a. Qualifications of personnel; laboratory manager, supervising technician, and testing technicians.

b. A listing of equipment to be used in developing the job mix.

c. A copy of the laboratory's quality control system.

d. Evidence of participation in the AASHTO Materials Reference Laboratory (AMRL) program.

3.6 TRANSPORTING AND PLACING

3.6.1 Transporting

The hot-mix asphalt shall be transported from the mixing plant to the site in clean, tight vehicles. Deliveries shall be scheduled so that placing and compacting of mixture is uniform with minimum stopping and starting of the paver. Adequate artificial lighting shall be provided for night placements. Hauling over freshly placed material will not be permitted until the material has been compacted as specified, and allowed to cool to 140 degrees F. To deliver mix to the paver, the Contractor shall use a material transfer vehicle which shall be operated to produce continuous forward motion of the paver.

3.6.2 Placing

The mix shall be placed and compacted at a temperature suitable for obtaining density, surface smoothness, and other specified requirements. Upon arrival, the mixture shall be placed to the full width by an asphalt paver; it shall be struck off in a uniform layer of such depth that, when the work is completed, it shall have the required thickness and conform to the grade and contour indicated. The speed of the paver shall be regulated to eliminate pulling and tearing of the asphalt mat. Unless otherwise permitted, placement of the mixture shall begin along the centerline of a crowned section or on the high side of areas with a one-way slope. The mixture shall be placed in consecutive adjacent strips having a minimum width of 10 feet. The longitudinal joint in one course shall offset the longitudinal joint in the course immediately below by at least 1 foot; however, the joint in the surface course shall be at the centerline of the pavement. Transverse joints in one course shall be offset by at least 10 feet from transverse joints in the previous course. Transverse joints in adjacent lanes shall be offset a minimum of 10 feet. On isolated areas where irregularities or unavoidable obstacles make the use of mechanical spreading and finishing equipment impractical, the mixture may be spread and luted by hand tools.

3.7 COMPACTION OF MIXTURE

After placing, the mixture shall be thoroughly and uniformly compacted by rolling. The surface shall be compacted as soon as possible without causing displacement, cracking or shoving. The sequence of rolling operations and the type of rollers used shall be at the discretion of the Contractor. The speed of the roller shall, at all times, be sufficiently slow to avoid displacement of the hot mixture and be effective in compaction. Any displacement occurring as a result of reversing the direction of the roller, or from any other cause, shall be corrected at once. Sufficient rollers shall be furnished to handle the output of the plant. Rolling shall continue until the surface is of uniform texture, true to grade and cross section, and the required field density is obtained. To prevent adhesion of the mixture to the roller, the wheels shall be kept properly moistened but excessive water will not be permitted. In areas not accessible to the roller, the mixture shall be thoroughly compacted with hand tampers. Any mixture that becomes loose and broken, mixed with dirt, contains check-cracking, or is in any way defective shall be removed full depth, replaced with fresh hot mixture and immediately compacted to conform to the surrounding area. This work shall be done at the Contractor's expense. Skin patching will not be allowed.

3.8 JOINTS

The formation of joints shall be made ensuring a continuous bond between the courses and to obtain the required density. All joints shall have the same texture as other sections of the course and meet the requirements for smoothness and grade.

3.8.1 Transverse Joints

The roller shall not pass over the unprotected end of the freshly laid mixture, except when necessary to form a transverse joint. When necessary to form a transverse joint, it shall be made by means of placing a bulkhead or by tapering the course. The tapered edge shall be cut back to its full depth and width on a straight line to expose a vertical face prior to placing material at the joint . The cutback material shall be removed from the project. In both methods, all contact surfaces shall be given a light tack coat of asphalt material before placing any fresh mixture against the joint.

3.8.2 Longitudinal Joints

Longitudinal joints which are irregular, damaged, uncompacted, cold (less than 175 degrees F at the time of placing adjacent lanes), or otherwise defective, shall be cut back a minimum of 2 inches from the edge with a cutting wheel to expose a clean, sound vertical surface for the full depth of the course. All cutback material shall be removed from the project. All contact surfaces shall be given a light tack coat of asphalt material prior to placing any fresh mixture against the joint. The Contractor will be allowed to use an alternate method if it can be demonstrated that density, smoothness, and texture can be met.

3.9 CONTRACTOR QUALITY CONTROL

3.9.1 General Quality Control Requirements

The Contractor shall develop an approved Quality Control Plan. Hot-mix asphalt for payment shall not be produced until the quality control plan has been approved. The plan shall address all elements which affect the quality of the pavement including, but not limited to:

a. Mix Design

b. Aggregate Grading

c. Quality of Materials

d. Stockpile Management

e. Proportioning

f. Mixing and Transportation

g. Mixture Volumetrics

h. Moisture Content of Mixtures

i. Placing and Finishing

j. Joints

k. Compaction

l.Surface Smoothness

3.9.2 Quality Control Testing

The Contractor shall perform all quality control tests applicable to these specifications and as set forth in the Quality Control Program. The testing program shall include, but shall not be limited to, tests for the control of asphalt content, aggregate gradation, temperatures, aggregate moisture, moisture in the asphalt mixture, laboratory air voids, stability, flow, in-place density, grade and smoothness. A Quality Control Testing Plan shall be developed as part of the Quality Control Program.

3.9.2.1 Asphalt Content

A minimum of two tests to determine asphalt content will be performed per lot (a lot is defined in paragraph MATERIAL ACCEPTANCE AND PERCENT PAYMENT) by one of the following methods: the extraction method in accordance with ASTM D 2172, Method A or B, the ignition method in accordance with the AASHTO TP53or ASTM D 6307, or the nuclear method in accordance with ASTM D 4125, provided the nuclear gauge is calibrated for the specific mix being used. For the extraction method, the weight of ash, as described in ASTM D 2172, shall be determined as part of the first extraction test performed at the beginning of plant production; and as part of every tenth extraction test performed thereafter, for the duration of plant production. The last weight of ash value obtained shall be used in the calculation of the asphalt content for the mixture.

3.9.2.2 Gradation

Aggregate gradations shall be determined a minimum of twice per lot from mechanical analysis of recovered aggregate in accordance with ASTM D 5444. When asphalt content is determined by the nuclear method, aggregate gradation shall be determined from hot bin samples on batch plants, or from the cold feed on drum mix plants. For batch plants, aggregates shall be tested in accordance with ASTM C 136 using actual batch weights to determine the combined aggregate gradation of the mixture.

3.9.2.3 Temperatures

Temperatures shall be checked at least four times per lot, at necessary locations, to determine the temperature at the dryer, the asphalt cement in the storage tank, the asphalt mixture at the plant, and the asphalt mixture at the job site.

3.9.2.4 Aggregate Moisture

The moisture content of aggregate used for production shall be determined a minimum of once per lot in accordance with ASTM C 566.

3.9.2.5 Moisture Content of Mixture

The moisture content of the mixture shall be determined at least once per lot in accordance with ASTM D 1461 or an approved alternate procedure.

3.9.2.6 Laboratory Air Voids, Marshall Stability and Flow

Mixture samples shall be taken at least four times per lot and compacted into specimens, using 50 blows per side with the Marshall hammer as described in ASTM D 1559. After compaction, the laboratory air voids of each specimen shall be determined, as well as the Marshall stability and flow.

3.9.2.7 In-Place Density

The Contractor shall conduct any necessary testing to ensure the specified density is achieved. A nuclear gauge may be used to monitor pavement density in accordance with ASTM D 2950.

3.9.2.8 Grade and Smoothness

The Contractor shall conduct the necessary checks to ensure the grade and smoothness requirements are met in accordance with paragraph MATERIAL ACCEPTANCE AND PERCENT PAYMENT.

3.9.2.9 Additional Testing

Any additional testing, which the Contractor deems necessary to control the process, may be performed at the Contractor's option.

3.9.2.10 QC Monitoring

The Contractor shall submit all QC test results to the Contracting Officer on a daily basis as the tests are performed. The Contracting Officer reserves the right to monitor any of the Contractor's quality control testing and to perform duplicate testing as a check to the Contractor's quality control testing.

3.9.3 Sampling

When directed by the Contracting Officer, the Contractor shall sample and test any material which appears inconsistent with similar material being produced, unless such material is voluntarily removed and replaced or deficiencies corrected by the Contractor. All sampling shall be in accordance with standard procedures specified.

3.10 MATERIAL ACCEPTANCE

Testing for acceptability of work will be performed by an independent laboratory hired by the Contractor. Test results shall be forwarded daily to the Contracting Officer. Acceptance of the plant produced mix and in-place requirements will be on a lot to lot basis. A standard lot for all requirements will be equal to 2000 tons or 8 hours of production. In order to evaluate laboratory air voids and in-place (field) density, each lot will be divided into four equal sublots. When a lot or sublot of material fails to meet the specification requirements that lot or sublot shall be removed and replaced.

3.10.1 Sublot Sampling

One random mixture sample for determining laboratory air voids, theoretical maximum density, and for any additional testing the Contracting Officer desires, will be taken from a loaded truck delivering mixture to each sublot, or other appropriate location for each sublot. All samples will be

selected randomly, using commonly recognized methods of assuring randomness conforming to ASTM D 3665 and employing tables of random numbers or computer programs. Laboratory air voids will be determined from three laboratory compacted specimens of each sublot sample in accordance with ASTM D 1559. The specimens will be compacted within 2 hours of the time the mixture was loaded into trucks at the asphalt plant. Samples will not be reheated prior to compaction and insulated containers will be used as necessary to maintain the temperature.

3.10.2 Additional Sampling and Testing

The Contracting Officer reserves the right to direct additional samples and tests for any area which appears to deviate from the specification requirements. The cost of any additional testing will be paid for by the Government. Testing in these areas will be in addition to the lot testing, and the requirements for these areas will be the same as those for a lot.

3.10.3 Laboratory Air Voids

Laboratory air voids will be calculated by determining the Marshall density of each lab compacted specimen using ASTM D 2726 and determining the theoretical maximum density of every other sublot sample using ASTM D 2041. Laboratory air void calculations for each sublot will use the latest theoretical maximum density values obtained, either for that sublot or the previous sublot. The mean absolute deviation of the four laboratory air void contents (one from each sublot) from the JMF air void content will be evaluated and a pay factor determined from Table 7. All laboratory air void tests will be completed and reported within 24 hours after completion of construction of each lot.

3.10.4 In-place Density

3.10.4.1 General Density Requirements

For determining in-place density, one random core will be taken from the mat (interior of the lane) of each sublot, and one random core will be taken from the joint (immediately over joint) of each sublot. Each random core will be full thickness of the layer being placed. When the random core is less than 1 inch thick, it will not be included in the analysis. In this case, another random core will be taken. After air drying to a constant weight, cores obtained from the mat and from the joints will be used for in-place density determination.

3.10.4.2 Mat and Joint Densities

The average in-place mat and joint densities are expressed as a percentage of the average Marshall density for the lot. The Marshall density for each lot will be determined as the average Marshall density of the four random samples (3 specimens compacted per sample).

3.10.5 Grade

The final wearing surface of pavement shall conform to the elevations and cross sections shown and shall vary not more than 0.05 foot from the plan grade established and approved at site of work. Finished surfaces at juncture with other pavements shall coincide with finished surfaces of abutting pavements. Deviation from the plan elevation will not be permitted in areas of pavements where closer conformance with planned elevation is required for the proper functioning of drainage and other

appurtenant structures involved. The final wearing surface of the pavement will be tested for conformance with specified plan grade requirements. The grade will be determined by running lines of levels at intervals of 25 feet, or less, longitudinally and transversely, to determine the elevation of the completed pavement surface. Within 5 working days, after the completion of a particular lot incorporating the final wearing surface, the Contracting Officer will inform the Contractor in writing, of the results of the grade-conformance tests. In areas where the grade exceeds the tolerance by more than 50 percent, the Contractor shall remove the surface lift full depth; the Contractor shall then replace the lift with hot-mix asphalt to meet specification requirements, at no additional cost to the Government. Diamond grinding may be used to remove high spots to meet grade requirements. Skin patching for correcting low areas or planing or milling for correcting high areas will not be permitted.

3.10.6 Surface Smoothness

The Contractor shall use one of the following methods to test and evaluate surface smoothness of the pavement. All testing shall be performed in the presence of the Contracting Officer. Detailed notes of the results of the testing shall be kept and a copy furnished to the Government immediately after each day's testing. Where drawings show required deviations from a plane surface (crowns, drainage inlets, etc.), the surface shall be finished to meet the approval of the Contracting Officer.

3.10.6.1 Smoothness Requirements

a. Straightedge Testing: The finished surfaces of the pavements shall have no abrupt change of 1/4 inch or more, when checked with an approved 10 foot straightedge.

3.10.6.2 Testing Method

After the final rolling, but not later than 24 hours after placement, the surface of the pavement in each entire lot shall be tested by the Contractor in such a manner as to reveal all surface irregularities exceeding the tolerances specified above. Separate testing of individual sublots is not required. If any pavement areas are ground, these areas shall be retested immediately after grinding. The entire area of the pavement shall be tested in both a longitudinal and a transverse direction on parallel lines. The transverse lines shall be 25 feet or less apart, as directed. The longitudinal lines shall be at the centerline of each paving lane for lines less than 20 feet and at the third points for lanes 20 feet or greater. Other areas having obvious deviations shall also be tested. Longitudinal testing lines shall be continuous across all joints.

a. Straightedge Testing. The straightedge shall be held in contact with the surface and moved ahead one-half the length of the straightedge for each successive measurement. The amount of surface irregularity shall be determined by placing the freestanding (unleveled) straightedge on the pavement surface and allowing it to rest upon the two highest spots covered by its length, and measuring the maximum gap between the straightedge and the pavement surface in the area between these two high points.

3.10.6.3 Payment Adjustment for Smoothness

a. Straightedge Testing. Location and deviation from straightedge for all measurements shall be recorded. When 5.0 percent of all measurements made within a lot exceed the tolerance specified in paragraph

Smoothness Requirements above, the area shall be removed and replaced.

-- End of Section --

SECTION TABLE OF CONTENTS

DIVISION 02 - SITE CONSTRUCTION

SECTION 02748A

BITUMINOUS TACK AND PRIME COATS

01/98

PART 1 GENERAL

1.1 REFERENCES
1.2 SUBMITTALS
1.3 PLANT, EQUIPMENT, MACHINES AND TOOLS
1.3.1 General Requirements
1.3.2 Bituminous Distributor
1.3.3 Power Brooms and Power Blowers
1.4 WEATHER LIMITATIONS

PART 2 PRODUCTS

2.1 TACK COAT
2.2 PRIME COAT

PART 3 EXECUTION

3.1 PREPARATION OF SURFACE
3.2 APPLICATION RATE
3.2.1 Tack Coat
3.2.2 Prime Coat
3.3 APPLICATION TEMPERATURE
3.3.1 Viscosity Relationship
3.3.2 Temperature Ranges
3.4 APPLICATION
3.4.1 General
3.4.2 Prime Coat
3.4.3 Tack Coat
3.5 CURING PERIOD
3.6 FIELD QUALITY CONTROL
3.7 SAMPLING AND TESTING
3.7.1 Sampling
3.7.2 Calibration Test
3.7.3 Trial Applications
3.7.3.1 Tack Coat Trial Application Rate
3.7.3.2 Prime Coat Trial Application Rate
3.7.4 Sampling and Testing During Construction

-- End of Section Table of Contents --

UFGS-02748A (January 1998)

SECTION 02748A

BITUMINOUS TACK AND PRIME COATS
01/98

PART 1 GENERAL

1.1 REFERENCES

The publications listed below form a part of this specification to the extent referenced. The publications are referred to in the text by basic designation only.

AMERICAN ASSOCIATION OF STATE HIGHWAY AND TRANSPORTATION OFFICIALS (AASHTO)

AASHTO T 40	(1978; R 1996) Sampling Bituminous Materials

AMERICAN SOCIETY FOR TESTING AND MATERIALS (ASTM)

ASTM D 140	(200) Sampling Bituminous Materials
ASTM D 977	(1998) Emulsified Asphalt
ASTM D 2028	(1976; R 1997) Cutback Asphalt (Rapid-Curing Type)
ASTM D 2397	(1998) Cationic Emulsified Asphalt
ASTM D 2995	(1999) Determining Application Rate of Bituminous Distributors

1.2 SUBMITTALS

Government approval is required for submittals with a "G" designation; submittals not having a "G" designation are for information only. When used, a designation following the "G" designation identifies the office that will review the submittal for the Government. The following shall be submitted in accordance with Section 01330 SUBMITTAL PROCEDURES:

SD-06 Test Reports

Sampling and Testing

Copies of all test results for bituminous materials, within 24 hours of completion of tests. Certified copies of the manufacturer's test reports indicating compliance with applicable specified requirements, not less than 30 days before the material is required in the work.

1.3 PLANT, EQUIPMENT, MACHINES AND TOOLS

1.3.1 General Requirements

Plant, equipment, machines and tools used in the work shall be subject to approval and shall be maintained in a satisfactory working condition at all times.

1.3.2 Bituminous Distributor

The distributor shall have pneumatic tires of such size and number to prevent rutting, shoving or otherwise damaging the base surface or other layers in the pavement structure. The distributor shall be designed and equipped to spray the bituminous material in a uniform coverage at the specified temperature, at readily determined and controlled rates with an allowable variation from the specified rate of not more than plus or minus 5 percent, and at variable widths. Distributor equipment shall include a separate power unit for the bitumen pump, full-circulation spray bars, tachometer, pressure gauges, volume-measuring devices, adequate heaters for heating of materials to the proper application temperature, a thermometer for reading the temperature of tank contents, and a hand hose attachment suitable for applying bituminous material manually to areas inaccessible to the distributor. The distributor shall be equipped to circulate and agitate the bituminous material during the heating process.

1.3.3 Power Brooms and Power Blowers

Power brooms and power blowers shall be suitable for cleaning the surfaces to which the bituminous coat is to be applied.

1.4 WEATHER LIMITATIONS

Bituminous coat shall be applied only when the surface to receive the bituminous coat is dry. Bituminous coat shall be applied only when the atmospheric temperature in the shade is 50 degrees F or above and when the temperature has not been below 35 degrees F for the 12 hours prior to application.

PART 2 PRODUCTS

2.1 TACK COAT

Cutback asphalt Emulsified asphalt shall conform to ASTM D 2028, ASTM D 977, ASTM D 2397.

2.2 PRIME COAT

Cutback asphalt shall conform to ASTM D 2028.

PART 3 EXECUTION

3.1 PREPARATION OF SURFACE

Immediately before applying the bituminous coat, all loose material, dirt, clay, or other objectionable material shall be removed from the surface to be treated. The surface shall be dry and clean at the time of treatment.

3.2 APPLICATION RATE

The exact quantities within the range specified, which may be varied to suit field conditions, will be determined by the Contracting Officer.

3.2.1 Tack Coat

Bituminous material for the tack coat shall be applied in quantities of not less than 0.05 gallon nor more than 0.15 gallon per square yard of pavement surface.

3.2.2 Prime Coat

Bituminous material for the prime coat shall be applied in quantities of not less than 0.15 gallon nor more than 0.40 gallon per square yard of pavement surface.

3.3 APPLICATION TEMPERATURE

3.3.1 Viscosity Relationship

Asphalt application temperature shall provide an application viscosity between 10 and 60 seconds, Saybolt Furol, or between 20 and 120 centistokes, kinematic. The temperature viscosity relation shall be furnished to the Contracting Officer.

3.3.2 Temperature Ranges

The viscosity requirements shall determine the application temperature to be used. The following is a normal range of application temperatures:

Emulsions	
SS-1h	70-160 degrees F
CRS-1	125-185 degrees F
CSS-1h	70-160 degrees F

*These temperature ranges exceed the flash point of the material and care should be taken in their heating.

3.4 APPLICATION

3.4.1 General

Following preparation and subsequent inspection of the surface, the bituminous coat shall be applied at the specified rate with uniform distribution over the surface to be treated. All areas and spots missed by the distributor shall be properly treated with the hand spray. Until the succeeding layer of pavement is placed, the surface shall be maintained by protecting the surface against damage and by repairing deficient areas at no additional cost to the Government. If required, clean dry sand shall be spread to effectively blot up any excess bituminous material. No smoking, fires, or flames other than those from the heaters that are a part of the equipment shall be permitted within 25 feet of heating, distributing, and transferring operations of bituminous material other than bituminous emulsions. All traffic, except for paving equipment used in constructing the surfacing, shall be prevented from using the underlying material,

whether primed or not, until the surfacing is completed. The bituminous coat shall conform to all requirements as described herein.

3.4.2 Prime Coat

The prime coat will be required if it will be at least seven days before a the surfacing (Asphalt cement hot mix concrete)layer is constructed on the underlying (base course, etc)compacted material. The type of liquid asphalt and application rate will be as specified herein. The Contractor shall protect the underlying from any damage (water, traffic, etc.) until the surfacing is placed. If the Contractor places the surfacing within seven days, the choice of protection measures or actions to be taken is at the Contractor's option. Damage to the underlying material caused by lack of, or inadequate, protection shall be repaired (recompacted or replaced) by approved methods at no additional cost to the Government. If the Contractor options to use the prime coat, it shall be applied as soon as possible after consolidation of the underlying material. To obtain uniform application of the prime coat on the surface treated at the junction of previous and subsequent applications, building paper shall be spread on the surface for a sufficient distance back from the ends of each application to start and stop the prime coat on the paper. Immediately after application, the building paper shall be removed and destroyed.

3.4.3 Tack Coat

Tack coat shall be applied at the locations shown on the drawings.

3.5 CURING PERIOD

Following application of the bituminous material and prior to application of the succeeding layer of pavement, the bituminous coat shall be allowed to cure and to obtain evaporation of any volatiles or moisture. Prime coat shall be allowed to cure without being disturbed for a period of at least 48 hours or longer, as may be necessary to attain penetration into the treated course.

3.6 FIELD QUALITY CONTROL

Samples of the bituminous material used shall be obtained by the Contractor as directed, under the supervision of the Contracting Officer. The sample may be retained and tested by the Government at no cost to the Contractor.

3.7 SAMPLING AND TESTING

Sampling and testing shall be performed by an approved commercial testing laboratory or by facilities furnished by the Contractor. No work requiring testing will be permitted until the facilities have been inspected and approved.

3.7.1 Sampling

The samples of bituminous material, unless otherwise specified, shall be in accordance with ASTM D 140 or AASHTO T 40. Sources from which bituminous materials are to be obtained shall be selected and notification furnished the Contracting Officer within 15 days after the award of the contract.

3.7.2 Calibration Test

The Contractor shall furnish all equipment, materials, and labor necessary

to calibrate the bituminous distributor. Calibration shall be made with the approved job material and prior to applying the bituminous coat material to the prepared surface. Calibration of the bituminous distributor shall be in accordance with ASTM D 2995.

3.7.3 Trial Applications

Before providing the complete bituminous coat, three lengths of at least 100 feet for the full width of the distributor bar shall be applied to evaluate the amount of bituminous material that can be satisfactorily applied.

3.7.3.1 Tack Coat Trial Application Rate

Unless otherwise authorized, the trial application rate of bituminous tack coat materials shall be applied in the amount of 0.05 gallons per square yard. Other trial applications shall be made using various amounts of material as may be deemed necessary.

3.7.3.2 Prime Coat Trial Application Rate

Unless otherwise authorized, the trial application rate of bituminous materials shall be applied in the amount of 0.25 gallon per square yard. Other trial applications shall be made using various amounts of material as may be deemed necessary.

3.7.4 Sampling and Testing During Construction

Quality control sampling and testing shall be performed as required in paragraph FIELD QUALITY CONTROL.

-- End of Section --

SECTION TABLE OF CONTENTS

DIVISION 02 - SITE CONSTRUCTION

SECTION 02754A

CONCRETE PAVEMENTS FOR SMALL PROJECTS

07/01

PART 1 GENERAL

1.1 REFERENCES
1.2 SYSTEM DESCRIPTION
1.3 ACCEPTABILITY OF WORK
1.3.1 Evaluation Sampling
1.3.2 Surface Testing
1.3.2.1 Surface Smoothness Requirements
1.3.2.2 Surface Smoothness Testing Method
1.3.3 Plan Grade Testing and Conformance
1.4 PRECONSTRUCTION TESTING OF MATERIALS
1.5 SUBMITTALS
1.6 EQUIPMENT
1.6.1 Batching and Mixing
1.6.2 Transporting Equipment
1.6.3 Delivery Equipment
1.6.4 Paver-Finisher
1.6.4.1 Paver-Finisher with Fixed Forms
1.6.4.2 Other Types of Finishing Equipment
1.6.5 Curing Equipment
1.6.6 Texturing Equipment
1.6.6.1 Fabric Drag
1.6.7 Sawing Equipment
1.6.8 Straightedge

PART 2 PRODUCTS

2.1 CEMENTITIOUS MATERIALS
2.1.1 Portland Cement
2.1.2 Blended Cements
2.1.3 Pozzolan (Fly Ash)
2.1.4 Ground Granulated Blast-Furnace Slag (GGBF Slag)
2.2 AGGREGATES
2.2.1 Coarse Aggregate
2.2.2 Fine Aggregate
2.3 CHEMICAL ADMIXTURES
2.4 CURING MATERIALS
2.5 WATER
2.6 JOINT MATERIALS
2.6.1 Expansion Joint Material
2.6.2 Slip Joint Material
2.6.3 Joint Sealants
2.7 REINFORCING
2.7.1 General
2.8 DOWELS AND TIE BARS
2.8.1 Dowels
2.8.2 Tie Bars
2.9 EPOXY RESIN

2.10 SPECIFIED CONCRETE STRENGTH AND OTHER PROPERTIES
2.11 MIXTURE PROPORTIONS
2.11.1 Composition Concrete
2.11.2 Concrete Mixture Proportioning Studies
2.11.3 Mixture Proportioning Procedure
2.11.4 Average Strength Required for Mixtures

PART 3 EXECUTION

3.1 CONDITIONING OF UNDERLYING MATERIAL
3.2 WEATHER LIMITATIONS
3.2.1 Hot Weather Paving
3.2.2 Cold Weather Paving
3.3 CONCRETE PRODUCTION
3.3.1 General Requirements
3.3.2 Transporting and Transfer-Spreading Operations
3.4 PAVING
3.4.1 Consolidation
3.4.2 Operation
3.4.3 Required Results
3.4.4 Fixed Form Paving
3.4.5 Placing Reinforcing Steel
3.4.6 Placing Dowels and Tie Bars
3.4.6.1 Contraction Joints
3.4.6.2 Construction Joints-Fixed Form Paving
3.4.6.3 Dowels Installed in Hardened Concrete
3.5 FINISHING
3.5.1 Machine Finishing With Fixed Forms
3.5.2 Machine Finishing With Slipform Pavers
3.5.3 Surface Correction
3.5.4 Hand Finishing
3.5.5 Texturing
3.5.5.1 Fabric-Drag Surface Finish
3.5.6 Edging
3.6 CURING
3.6.1 Membrane Curing
3.6.2 Moist Curing
3.7 JOINTS
3.7.1 Longitudinal Construction Joints
3.7.2 Transverse Construction Joints
3.7.3 Expansion Joints
3.7.4 Slip Joints
3.7.5 Contraction Joints
3.7.5.1 Sawed Joints
3.7.6 Thickened Edge Joints
3.8 REPAIR, REMOVAL, AND REPLACEMENT OF SLABS
3.8.1 Removal and Replacement of Full Slabs
3.8.2 Repairing Spalls Along Joints
3.8.3 Areas Defective in Plan Grade or Smoothness
3.9 EXISTING CONCRETE PAVEMENT REMOVAL AND REPAIR
3.10 PAVEMENT PROTECTION
3.11 TESTING AND INSPECTION FOR CONTRACTOR QUALITY CONTROL (CQC)
3.11.1 Batch Plant Control
3.11.2 Concrete Mixture
3.11.3 Inspection Before Placing
3.11.4 Paving Operations
3.11.5 Curing Inspection
3.11.6 Cold-Weather Protection
3.11.7 Reports

-- End of Section Table of Contents --

UFGS-02754A (July 2001)

SECTION 02754A

CONCRETE PAVEMENTS FOR SMALL PROJECTS
07/01

PART 1 GENERAL

1.1 REFERENCES

The publications listed below form a part of this specification to the extent referenced. The publications are referred to in the text by basic designation only.

ACI INTERNATIONAL (ACI)

ACI 211.1	(1991) Standard Practice for Selecting Proportions for Normal, Heavyweight, and Mass Concrete
ACI 301	(1999) Standard Specifications for Structural Concrete
ACI 305R	(1999) Hot Weather Concreting

AMERICAN SOCIETY FOR TESTING AND MATERIALS (ASTM)

ASTM A 184/A 184M	(1996) Fabricated Deformed Steel Bar Mats for Concrete Reinforcement
ASTM A 615/A 615M	(2000) Deformed and Plain Billet-Steel Bars for Concrete Reinforcement
ASTM C 31/C 31M	(2000) Making and Curing Concrete Test Specimens in the Field
ASTM C 33	(1999ael) Concrete Aggregates
ASTM C 39/C 39M	(1999) Compressive Strength of Cylindrical Concrete Specimens
ASTM C 94/C 94M	(2000) Ready-Mixed Concrete
ASTM C 123	(1998) Lightweight Particles in Aggregate
ASTM C 143/C 143M	(2000) Slump of Hydraulic Cement Concrete
ASTM C 150	(1999a) Portland Cement
ASTM C 192/C 192M	(2000) Making and Curing Concrete Test Specimens in the Laboratory
ASTM C 231	(1997el) Air Content of Freshly Mixed Concrete by the Pressure Method

ASTM C 260	(2000) Air-Entraining Admixtures for Concrete
ASTM C 494/C 494M	(1999a) Chemical Admixtures for Concrete
ASTM C 595	(2000a) Blended Hydraulic Cements
ASTM C 618	(2000) Coal Fly Ash and Raw or Calcined Natural Pozzolan for Use as a Mineral Admixture in Concrete
ASTM C 666	(1997) Resistance of Concrete to Rapid Freezing and Thawing
ASTM C 881	(1999) Epoxy-Resin-Base Bonding Systems for Concrete
ASTM C 989	(1999) Ground Granulated Blast-Furnace Slag for Use in Concrete and Mortars
ASTM C 1077	(1998) Laboratories Testing Concrete and Concrete Aggregates for Use in Construction and Criteria for Laboratory Evaluation
ASTM D 1751	(1999) Preformed Expansion Joint Filler for Concrete Paving and Structural Construction (Nonextruding and Resilient Bituminous Types)
ASTM D 1752	(1984; R 1996el) Preformed Sponge Rubber and Cork Expansion Joint Fillers for Concrete Paving and Structural Construction

U.S. ARMY CORPS OF ENGINEERS (USACE)

COE CRD-C 130	(1989) Scratch Hardness of Coarse Aggregate Particles
COE CRD-C 300	(1990) Specifications for Membrane-Forming Compounds for Curing Concrete

NATIONAL READY-MIXED CONCRETE ASSOCIATION (NRMCA)

NRMCA CPMB 100	(1996) Concrete Plant Standards

1.2 SYSTEM DESCRIPTION

This section is intended to stand alone for construction of concrete (rigid) pavement. However, where the construction covered herein interfaces with other sections, the construction at each interface shall conform to the requirements of both this section and the other section, including tolerances for both.

1.3 ACCEPTABILITY OF WORK

The pavement will be accepted on the basis of tests made by the Government and by the Contractor or its suppliers, as specified herein. The Government may, at its discretion, make check tests to validate the results

of the Contractor's testing. Concrete samples shall be taken by the Contractor at the placement to determine the slump, air content, and strength of the concrete. Test cylinders shall be made for determining conformance with the strength requirements of these specifications and, when required, for determining the time at which pavements may be placed into service. All air content measurements shall be determined in accordance with ASTM C 231. All slump tests shall be made in accordance with ASTM C 143/C 143M. All test cylinders shall be 6 by 12 inch cylinders and shall be fabricated in accordance with ASTM C 192/C 192M, using only steel molds, cured in accordance with ASTM C 31/C 31M, and tested in accordance with ASTM C 39/C 39M. A strength test shall be the average of the strengths of two cylinders made from the same sample of concrete and tested at 28 days. The Contractor shall furnish all materials, labor, and facilities required for molding, curing, testing, and protecting test specimens at the site and in the laboratory.

1.3.1 Evaluation Sampling

Sampling, testing, and mixture proportioning shall be performed by a commercial Testing Laboratory, conforming with ASTM C 1077. The individuals who sample and test concrete and concrete constituents shall be certified as American Concrete Institute (ACI) Concrete Field Testing Technicians, Grade I. The individuals who perform the inspection of concrete shall be certified as ACI Concrete Construction Inspector, Level II. All mix design, weekly quality control reports, smoothness reports, and project certification reports shall be signed by a Registered Engineer.

1.3.2 Surface Testing

Surface testing for surface smoothness and plan grade shall be performed as indicated below by the Testing Laboratory. The measurements shall be properly referenced in accordance with paving lane identification and stationing, and a report given to the Government within 24 hours after measurement is made. A final report of surface testing, signed by a Registered Engineer, containing all surface measurements and a description of all actions taken to correct deficiencies, shall be provided to the Government upon conclusion of surface testing.

1.3.2.1 Surface Smoothness Requirements

The finished surfaces of the pavements shall have no abrupt change of 1/8 inch or more, and all pavements shall be within the tolerances specified in Table 1 when checked with the straightedge.

TABLE 1
STRAIGHTEDGE SURFACE SMOOTHNESS--PAVEMENTS

Pavement Category	Direction of Testing	Tolerances inches
Runways and Taxiways	Longitudinal	1/8
	Transverse	1/4
Calibration Hardstands & Compass Swinging Bases	Longitudinal	1/8
	Transverse	1/8
All Other Airfield and Helicopter Paved Areas	Longitudinal	1/4
	Transverse	1/4

TABLE 1
STRAIGHTEDGE SURFACE SMOOTHNESS--PAVEMENTS

Pavement Category	Direction of Testing	Tolerances inches
Roads and Streets	Longitudinal	3/16
	Transverse	1/4
Tank Hardstands, Parking Areas, Open Storage Areas	Longitudinal	1/4
	Transverse	1/4

1.3.2.2 Surface Smoothness Testing Method

The surface of the pavement shall be tested with the straightedge to identify all surface irregularities exceeding the tolerances specified above. The entire area of the pavement shall be tested in both a longitudinal and a transverse direction on parallel lines approximately 15 feet apart. The straightedge shall be held in contact with the surface and moved ahead one-half the length of the straightedge for each successive measurement. The amount of surface irregularity shall be determined by placing the straightedge on the pavement surface and allowing it to rest upon the two highest spots covered by its length and measuring the maximum gap between the straightedge and the pavement surface, in the area between these two high points.

1.3.3 Plan Grade Testing and Conformance

The finished surface of the pavements shall conform, within the tolerances shown in Table 1, to the lines, grades, and cross sections shown. The finished surface of new abutting pavements shall coincide at their juncture. The finished surface of airfield runway, taxiway, and apron pavements shall vary not more than 0.04 foot above or below the plan grade line or elevation indicated. The surfaces of other pavements shall vary not more than 0.06 foot above or below the plan grade line or elevation indicated. Each pavement category shall be checked by the Contractor for conformance with plan grade requirements by running lines of levels at intervals to determine the elevation at each joint intersection.

1.4 PRECONSTRUCTION TESTING OF MATERIALS

The Contractor shall not be entitled to any additional payment or extension of time because of delays caused by sampling and testing additional sources, or samples, necessitated by failure of any samples. Aggregates shall be sampled and tested by the Test Laboratory and shall be representative of the materials to be used for the project. Test results, signed by a Registered Engineer, shall be submitted 45 days before commencing paving. No aggregate shall be used unless test results show that it meets all requirements of these specifications, including compliance with ASTM C 33 and deleterious materials limitations.

1.5 SUBMITTALS

Government approval is required for submittals with a "G" designation; submittals not having a "G" designation are for information only. When used, a designation following the "G" designation identifies the office that will review the submittal for the Government. The following shall be

submitted in accordance with Section 01330 SUBMITTAL PROCEDURES:

SD-03 Product Data

Equipment

Manufacturer's literature on the concrete plant; mixing equipment; hauling equipment; placing and finishing, and curing equipment; at least 7 days prior to start of paving.

Paving

Paving Schedules at least 7 days prior to start of paving.

Mixture Proportions

The report of the Contractor's mixture proportioning studies showing the proportions of all ingredients and supporting information on aggregate and other materials that will be used in the manufacture of concrete, at least 14 days prior to commencing concrete placing operations.

1.6 EQUIPMENT

1.6.1 Batching and Mixing

The batching plant shall conform to NRMCA CPMB 100, the equipment requirements in ASTM C 94/C 94M, and as specified. Water shall not be weighed or measured cumulatively with another ingredient. All concrete materials batching shall meet ASTM C 94/C 94M requirements. Mixers shall be truck mixers. Batching, mixers, mixing time, permitted reduction of mixing time, and concrete uniformity shall meet the requirements of ASTM C 94/C 94M, and shall be documented in the initial weekly QC Report.

1.6.2 Transporting Equipment

Transporting equipment shall be in conformance with ASTM C 94/C 94M and as specified herein. Concrete shall be transported to the paving site in rear-dump trucks, in truck mixers designed with extra large blading and rear opening specifically for low slump concrete, or in agitators. Bottom-dump trucks shall not be used for delivery of concrete.

1.6.3 Delivery Equipment

When concrete transport equipment cannot operate on the paving lane, side-delivery transport equipment consisting of self-propelled moving conveyors shall be used to deliver concrete from the transport equipment and discharge it in front of the paver. Front-end loaders, dozers, or similar equipment shall not be used to distribute the concrete.

1.6.4 Paver-Finisher

The paver-finisher shall be a heavy-duty, self-propelled machine designed specifically for paving and finishing high quality pavement. The paver-finisher shall spread, consolidate, and shape the plastic concrete to the desired cross section in one pass. The paver-finisher shall be equipped with a full width "knock-down" auger, capable of operating in both directions, which will evenly spread the fresh concrete in front of the screed or extrusion plate. Immersion vibrators shall be gang mounted at

the front of the paver on a frame equipped with suitable controls so that all vibrators can be operated at any desired depth within the slab or completely withdrawn from the concrete. The vibrators shall be automatically controlled so that they will be immediately stopped as forward motion of the paver ceases. The spacing of the immersion vibrators across the paving lane shall be as necessary to properly consolidate the concrete, but the clear distance between vibrators shall not exceed 30 inches, and the outside vibrators shall not exceed 12 inches from the edge of the lane. The paver-finisher shall be equipped with a transversely oscillating screed or an extrusion plate to shape, compact, and smooth the surface.

1.6.4.1 Paver-Finisher with Fixed Forms

The paver-finisher shall be equipped with wheels designed to ride the forms, keep it aligned with the forms, and to spread the preventing deformation of the forms.

1.6.4.2 Other Types of Finishing Equipment

Clary screeds or other rotating tube floats will not be allowed on the project.

1.6.5 Curing Equipment

Equipment for curing is specified in paragraph CURING.

1.6.6 Texturing Equipment

Texturing equipment shall be as specified below.

1.6.6.1 Fabric Drag

A fabric drag shall consist of a piece of fabric material as wide as the lane width securely attached to a separate wheel mounted frame spanning the paving lane or to one of the other similar pieces of equipment. The material shall be wide enough to provide 12 to 18 inches dragging flat on the pavement surface. The fabric material shall be clean, reasonably new burlap, kept clean and saturated during use

1.6.7 Sawing Equipment

Equipment for sawing joints and for other similar sawing of concrete shall be standard diamond-tip-bladed concrete saws mounted on a wheeled chassis.

1.6.8 Straightedge

The Contractor shall furnish and maintain at the job site one 12 foot straightedge for testing concrete surface smoothness. The straightedge shall be constructed of aluminum or magnesium alloy and shall have blades of box or box-girder cross section with flat bottom, adequately reinforced to insure rigidity and accuracy. Straightedges shall have handles for operation on the pavement.

PART 2 PRODUCTS

2.1 CEMENTITIOUS MATERIALS

Cementitious materials shall be portland cement and pozzolan

portland-pozzolan cement or portland blast-furnace slag cement and shall conform to appropriate specifications listed below.

2.1.1 Portland Cement

Portland cement shall conform to ASTM C 150 Type II, low-alkali.

2.1.2 Blended Cements

Blended cement shall conform to ASTM C 595 Type IP.

2.1.3 Pozzolan (Fly Ash)

Fly ash shall conform to ASTM C 618 Class F, including all the supplementary optional physical requirements. Fly ash shall conform to EPA requirements in accordance with Section 01670 RECYCLED / RECOVERED MATERIALS.

2.1.4 Ground Granulated Blast-Furnace Slag (GGBF Slag)

Ground granulated blast-furnace slag shall conform to ASTM C 989 Grade 120.

2.2 AGGREGATES

Aggregates shall consist of clean, hard, uncoated particles meeting the requirements of ASTM C 33, including deleterious materials, abrasion loss and soundness requirements of ASTM C 33, and other requirements specified herein. Aggregate not having a satisfactory demonstrable service record shall have a durability factor of 50 or more when subjected to freezing and thawing in concrete in accordance with ASTM C 666.

In addition to the grading requirements specified for coarse aggregate and for fine aggregate, the combined aggregate grading shall meet the following requirements.

a. If necessary, a blending aggregate shall be used to meet the required combined grading. This blending aggregate shall be batched separately. The combined grading of all aggregates used, in the proportions selected, shall be computed on the basis of cumulative percent retained on each sieve specified for fine and coarse aggregate.

b. The materials selected and the proportions used shall be such that when the Coarseness Factor (CF) and the Workability Factor (W) are plotted on a diagram as described in d. below, the point thus determined shall fall within the parallelogram described therein.

c. The Coarseness Factor (CF) shall be determined from the the following equation:

CF = (cumulative percent retained on the 3/8 in. sieve)(100)/(cumulative percent retained on the No. 8 sieve)

The Workability Factor (W) is defined as the cumulative percent passing the No. 8 sieve. However, W shall be adjusted, upwards only, by 2.5 percentage points for each 94 pounds of cementitious material per cubic

yard greater than 564 pounds per cubic yard.

d. A diagram shall be plotted using a rectangular scale with W on the Y-axis with units from 20 (bottom) to 45 (top), and with CF on the X-axis with units from 80 (left side) to 30 (right side). On this diagram a parallelogram shall be plotted with corners at the following coordinates (CF-75, W-28), (CF-75, W-40), (CF-45, W-32.5), and (CF-45, W-41). If the point determined by the intersection of the computed CF and W does not fall within the above parallelogram, the grading of each size of aggregate used and the proportions selected shall be changed as necessary.

e. In addition, the individual percent retained on each sieve shall be plotted for the combined aggregate grading, on either rectangular or semi-log graph paper. The graph shall show a relative smooth transition between coarse and fine aggregate and shall have no major valleys or peaks in the area smaller than the No. 8 sieve. If this plot does not meet the above criteria, the grading of each size aggregate used and the proportions selected shall be changed as necessary.

2.2.1 Coarse Aggregate

Coarse aggregate shall consist of crushed or uncrushed gravel, crushed stone, or a combination thereof. The nominal maximum size of the coarse aggregate shall be 3/4 inches. The amount of deleterious material in coarse aggregate shall not exceed the limits shown in ASTM C 33 Class 1N, 4M or 4S, depending on the weathering region, and the following limits:

a. Lightweight particles 1.0 max. percent by mass (ASTM C 123).

b. Other soft particles 2.0 max. percent by mass (COE CRD-C 130).

c. Total of all deleterious 5.0 max. percent by mass (substances listed in ASTM C 33 and above, exclusive of material finer than No. 200 sieve).

d. The separation medium for lightweight particles shall have a density of Sp. Gr. of 2.0.

2.2.2 Fine Aggregate

Fine aggregate shall consist of natural sand, manufactured sand, or a combination of the two, and shall be composed of clean, hard, durable particles. All fine aggregate shall be composed of clean, hard, durable particles meeting the requirements of ASTM C 33 and the requirements herein. The amount of deleterious material in the fine aggregate shall not exceed the limits in ASTM C 33and shall not exceed the following limits:

a. Lightweight particles (ASTM C 123) 1.0 percent max. by mass using a medium with a density of Sp. Gr. of 2.0.

b. The total of all deleterious material types, listed in ASTM C 33 and above, shall not exceed 3.0 percent of the mass of the fine aggregate.

2.3 CHEMICAL ADMIXTURES

Air-entraining admixture shall conform to ASTM C 260. An accelerator shall

be used only when specified in paragraph SPECIFIED CONCRETE STRENGTH AND OTHER PROPERTIES and shall not be used to reduce the amount of cementitious material used. Accelerator shall conform to ASTM C 494/C 494M Type C. Calcium chloride and admixtures containing calcium chloride shall not be used. A water-reducing or retarding admixture shall meet the requirements of ASTM C 494/C 494M. Type G or H admixtures are not allowed.

2.4 CURING MATERIALS

Membrane forming curing compound shall be a white pigmented compound conforming to COE CRD-C 300. Burlap shall be new or shall be clean material never used for anything other than curing concrete.

2.5 WATER

Water for mixing and curing shall be clean, potable, and free of injurious amounts of oil, acid, salt, or alkali.

2.6 JOINT MATERIALS

2.6.1 Expansion Joint Material

Expansion joint filler shall be a preformed material conforming to ASTM D 1751. Expansion joint filler shall be 3/4 inch thick.

2.6.2 Slip Joint Material

Slip joint material shall be 1/4 inch thick expansion joint filler conforming to ASTM D 1751 or ASTM D 1752.

2.6.3 Joint Sealants

See Section 02770A, "Concrete Sidewalks and Curbs and Gutters", paragraph 2.5 "Joint Sealants."

2.7 REINFORCING

2.7.1 General

Reinforcing bars shall conform to ASTM A 615/A 615M Grade 60. Bar mats shall conform to ASTM A 184/A 184M. Reinforcement shall be free from loose, flaky rust, loose scale, oil, grease, mud, or other coatings that might reduce the bond with concrete.

2.8 DOWELS AND TIE BARS

2.8.1 Dowels

Dowels shall be single piece, plain (non-deformed) steel bars conforming to ASTM A 615/A 615M Grade 60 or higher. Dowels shall be free of loose, flaky rust and loose scale and shall be clean and straight.

2.8.2 Tie Bars

Tie bars shall be deformed steel bars conforming to ASTM A 615/A 615M Grade 60. Grade 60 or higher shall not be used for bars that are bent and straightened during construction.

2.9 EPOXY RESIN

All epoxy-resin materials shall be two-component materials conforming to ASTM C 881, Class as appropriate for each application temperature to be encountered; except, that in addition, the materials shall meet the following requirements:

a. Material for use for embedding dowels and anchor bolts shall be Type IV, Grade 3.

b. Material for use as patching for complete filling of spalls, wide cracks, and other voids and for use in preparing epoxy resin mortar shall be Type III, Grade as approved.

c. Material for injecting cracks shall be Type IV, Grade 1.

d. Material for bonding freshly mixed portland cement concrete, mortar, or freshly mixed epoxy resin concrete to hardened concrete shall be Type V, Grade as approved.

2.10 SPECIFIED CONCRETE STRENGTH AND OTHER PROPERTIES

Specified compressive strength, f'c, for concrete is 4,000 psi at 28 days. Maximum allowable water-cementitious material ratio is 0.50. The water-cementitious material ratio is based on absolute volume equivalency, where the ratio is determined using the weight of cement for a cement only mix, or using the total volume of cement plus pozzolan converted to an equivalent weight of cement by the absolute volume equivalency method described in ACI 211.1. The concrete shall be air-entrained with a total air content of 6 plus or minus 1 percent. The maximum allowable slump of the concrete shall be 3 inchesfor pavement constructed with fixed forms. The strength of the concrete will be considered satisfactory so long as the average of all sets of three consecutive test results equals or exceeds the specified compressive strength f'c and no individual test result falls below the specified strength f'c by more than 500 psi. Additional analysis or testing, including taking cores and/or load tests may be required at the Contractor's expense when the strength of the concrete in the structure is considered potentially deficient.

2.11 MIXTURE PROPORTIONS

2.11.1 Composition Concrete

Composition concrete shall be composed of cementitious material, water, fine and coarse aggregates, and admixtures. Fly ash, if used, shall be used only at a rate between 15 and 35 percent by mass of the total cementitious material. Admixtures shall consist of air entraining admixture and may also include accelerator, retarder or water-reducing admixture. High range water-reducing admixtures and admixtures to produce flowable concrete shall not be used. No substitutions shall be made in the materials used in the mixture proportions without additional tests to show that the quality of the concrete is satisfactory.

2.11.2 Concrete Mixture Proportioning Studies

Trial design batches, mixture proportioning studies, and testing shall be the responsibility of the Contractor, and shall be performed by the Test Laboratory and signed by a Registered Engineer. No concrete pavement shall be placed until the Contracting Officer has approved the Contractor's

mixture proportions. All materials used in mixture proportioning studies shall be representative of those proposed for use on the project. If there is a change in materials, additional mixture design studies shall be made using the new materials. Trial mixtures having proportions, slumps, and air content suitable for the work shall be based on methodology described in ACI 211.1. At least three different water-cementitious ratios, which will produce a range of strength encompassing that required on the project, shall be used. Laboratory trial mixtures shall be proportioned for maximum permitted slump and air content. Maximum sand content shall be 40 percent of the total aggregate SSD weight. Aggregate quantities shall be based on the mass in a saturated surface dry condition.

2.11.3 Mixture Proportioning Procedure

The Contractor shall perform the following:

a. Fabricate, cure and test 6 test cylinders per age for each mixture at 7 and 28 days.

b. Using the average strength for each w/(c+p), plot the results from each of the three mixtures on separate graphs for w/(c+p) versus 28-day strength.

c. From the graphs select a w/(c+p) which will produce a mixture giving a 28-day strength equal to the required strength determined in accordance with the following paragraph.

2.11.4 Average Strength Required for Mixtures

In order to ensure meeting, during production, the strength requirements specified, the mixture proportions selected shall produce a required average strength, f'cr, exceeding the specified strength, f'c, in accordance with procedures in Chapter 3 of ACI 301, "Proportioning."

PART 3 EXECUTION

3.1 CONDITIONING OF UNDERLYING MATERIAL

Underlying material, base course, upon which concrete is to be placed shall be clean, damp, and free from debris, waste concrete or cement, frost, ice, and standing or running water. After the underlying material has been prepared for concrete placement, no equipment shall be permitted thereon.

3.2 WEATHER LIMITATIONS

3.2.1 Hot Weather Paving

The temperature of concrete shall not exceed 90 degrees F. Steel forms, dowels and reinforcing shall be cooled prior to concrete placement when steel temperatures are greater than 120 degrees F.

3.2.2 Cold Weather Paving

The ambient temperature of the air at the placing site and the temperature of surfaces to receive concrete shall be not less 40 degrees F. The temperature of the concrete when placed shall be not less than 50 degrees F. Materials entering the mixer shall be free from ice, snow, or frozen lumps. Salt, chemicals or other materials shall not be incorporated in the concrete to prevent freezing. Upon written approval, chemical admixture

conforming to ASTM C 494/C 494M Type C or E may be used provided it contains no calcium chloride. Calcium chloride shall not be used at any time. Covering and other means shall be provided for maintaining the concrete at a temperature of at least 50 degrees F for not less than 72 hours after placing, and at a temperature above freezing for the remainder of the curing period. Pavement damaged by freezing shall be completely removed and replaced at the Contractor's expense as specified in paragraph, REPAIR, REMOVAL, AND REPLACEMENT OF SLABS.

3.3 CONCRETE PRODUCTION

3.3.1 General Requirements

Concrete shall be deposited in front of the paver within 45 minutes from the time cement has been charged into the mixing drum, except that if the ambient temperature is above 90 degrees F, the time shall be reduced to 30 minutes. Every load of concrete delivered to the paving site shall be accompanied by a batch ticket from the operator of the batching plant. Tickets shall show at least the mass, or volume, of all ingredients in each batch delivered, the water meter and revolution meter reading on truck mixers and the time of day. Tickets shall be delivered to the placing foreman who shall keep them on file and deliver them to the Government daily.

3.3.2 Transporting and Transfer-Spreading Operations

Non-agitating equipment shall be used only on smooth roads and for haul time less than 15 minutes. Equipment shall be allowed to operate on the underlying material only if no damage is done to the underlying material and its degree of compaction. Any disturbance to the underlying material that does occur shall be corrected before the paver-finisher reaches the location of the disturbance and the equipment shall be replaced or procedures changed to prevent any future damage. Additional water may be added to truck mixers to bring the slump within the specified range provided the mixture water-cement ratio is not exceeded.

3.4 PAVING

Pavement shall be constructed with paving and finishing equipment utilizing fixed forms.

3.4.1 Consolidation

The paver vibrators shall be inserted into the concrete not closer to the underlying material than 2 inches. The vibrators or any tamping units in front of the paver shall be automatically controlled so that they shall be stopped immediately as forward motion ceases. Excessive vibration shall not be permitted. Concrete in small, odd-shaped slabs or in locations inaccessible to the paver mounted vibration equipment shall be vibrated with a hand-operated immersion vibrator. Vibrators shall not be used to transport or spread the concrete.

3.4.2 Operation

When the paver is operated between or adjacent to previously constructed pavement (fill-in lanes), provisions shall be made to prevent damage to the previously constructed pavement, including keeping the existing pavement surface free of any debris, and placing rubber mats beneath the paver tracks. Transversely oscillating screeds and extrusion plates shall

overlap the existing pavement the minimum possible, but in no case more than 8 inches.

3.4.3 Required Results

The paver-finisher shall be operated to produce a thoroughly consolidated slab throughout, true to line and grade within specified tolerances. The paver-finishing operation shall produce a surface finish free of irregularities, tears, voids of any kind, and any other discontinuities. It shall produce only a very minimum of paste at the surface. Multiple passes of the paver-finisher shall not be permitted. The equipment and its operation shall produce a finished surface requiring no hand finishing, other than the use of cutting straightedges, except in very infrequent instances. No water, other than true fog sprays (mist), shall be applied to the concrete surface during paving and finishing.

3.4.4 Fixed Form Paving

Forms shall be steel, except that wood forms may be used for curves having a radius of 150 feet or less, and for fillets. Forms may be built up with metal or wood, added only to the base, to provide an increase in depth of not more than 25 percent. The base width of the form shall be not less than eight-tenths of the vertical height of the form, except that forms 8 inches or less in vertical height shall have a base width not less than the vertical height of the form. Wood forms for curves and fillets shall be adequate in strength and rigidly braced. Forms shall be set on firm material cut true to grade so that each form section when placed will be firmly in contact with the underlying layer for its entire base. Forms shall not be set on blocks or on built-up spots of underlying material. Forms shall remain in place at least 12 hours after the concrete has been placed. Forms shall be removed without injuring the concrete.

3.4.5 Placing Reinforcing Steel

Reinforcement shall be positioned on suitable chairs securely fastened to the subgrade prior to concrete placement, or may be placed on an initial layer of consolidated concrete, with the subsequent layer placed within 30 minutes of the first layer placement.

3.4.6 Placing Dowels and Tie Bars

Dowels shall be installed with alignment not greater than 1/8 inch per ft. Except as otherwise specified below, location of dowels shall be within a horizontal tolerance of plus or minus 5/8 inch and a vertical tolerance of plus or minus 3/16 inch. The portion of each dowel intended to move within the concrete or expansion cap shall be painted with one coat of rust inhibiting primer paint, and then oiled just prior to placement. Dowels and tie bars in joints shall be omitted when the center of the dowel or tie bar is located within a horizontal distance from an intersecting joint equal to or less than one-fourth of the slab thickness.

3.4.6.1 Contraction Joints

Dowels and tie bars in longitudinal and transverse contraction joints within the paving lane shall be held securely in place by means of rigid metal basket assemblies. The dowels and tie bars shall be welded to the assembly or held firmly by mechanical locking arrangements that will prevent them from becoming distorted during paving operations. The basket assemblies shall be held securely in the proper location by means of

suitable anchors.

3.4.6.2 Construction Joints-Fixed Form Paving

Installation of dowels and tie bars shall be by the bonded-in-place method, supported by means of devices fastened to the forms. Installation by removing and replacing in preformed holes will not be permitted.

3.4.6.3 Dowels Installed in Hardened Concrete

Installation shall be by bonding the dowels into holes drilled into the hardened concrete. Holes approximately 1/8 inch greater in diameter than the dowels shall be drilled into the hardened concrete. Dowels shall be bonded in the drilled holes using epoxy resin injected at the back of the hole before installing the dowel and extruded to the collar during insertion of the dowel so as to completely fill the void around the dowel. Application by buttering the dowel shall not be permitted. The dowels shall be held in alignment at the collar of the hole, after insertion and before the grout hardens, by means of a suitable metal or plastic collar fitted around the dowel. The vertical alignment of the dowels shall be checked by placing the straightedge on the surface of the pavement over the top of the dowel and measuring the vertical distance between the straightedge and the beginning and ending point of the exposed part of the dowel.

3.5 FINISHING

Clary screeds, "bridge deck" finishers, or other rotating pipe or tube type equipment shall not be permitted. The sequence of machine operations shall be transverse finishing, longitudinal machine floating if used, straightedge finishing, texturing, and then edging of joints. Hand finishing shall be used only infrequently and only on isolated areas of odd slab shapes and in the event of a breakdown of the mechanical finishing equipment. Supplemental hand finishing for machine finished pavement shall be kept to an absolute minimum. Equipment to be used for supplemental hand finishing shall primarily be 10 to 12 feet cutting straightedges; only very sparing use of bull floats shall be allowed. At no time shall water be added to the surface of the slab in any way, except for fog (mist) sprays to prevent plastic shrinkage cracking.

3.5.1 Machine Finishing With Fixed Forms

The machine shall be designed to ride the forms. Machines that cause displacement of the forms shall be replaced. The machine shall make only one pass over each area of pavement. If the equipment and procedures do not produce a surface of uniform texture, true to grade, in one pass, the operation shall be immediately stopped and the equipment, mixture, and procedures adjusted as necessary.

3.5.2 Machine Finishing With Slipform Pavers

If there is sufficient concrete slurry or fluid paste on the surface that it runs over the edge of the pavement, the paving operation shall be immediately stopped and the equipment, mixture, or operation modified to prevent formation of such slurry. Any slurry which does run down the vertical edges shall be immediately removed. No slurry, concrete or concrete mortar shall be used to build up along the edges of the pavement to compensate for excessive edge slump, either while the concrete is plastic or after it hardens.

3.5.3 Surface Correction

While the concrete is still plastic, irregularities and marks in the pavement surface shall be eliminated by means of cutting straightedges, 10 to 12 feet in length. Depressions shall be filled with freshly mixed concrete, struck off, consolidated, and refinished. Projections above the required elevation shall also be struck off and refinished. Long-handled, flat "bull floats" shall be used sparingly and only as necessary to correct minor, scattered surface defects. Finishing with hand floats and trowels shall be held to the absolute minimum necessary. Joints and edges shall not be overfinished.

3.5.4 Hand Finishing

Hand finishing operations shall be used only for those unusual slabs as specified previously. Grate tampers (jitterbugs) shall not be used. As soon as placed and vibrated, the concrete shall be struck off and screeded. The surface shall be tamped with a strike-off and tamping screed, or vibratory screed. Immediately following the final tamping of the surface, the pavement shall be floated longitudinally. Long-handled, flat bull floats shall be used sparingly and only as necessary to correct surface defects. Finishing with hand floats and trowels shall be held to the absolute minimum necessary. Joints and edges shall not be overfinished. No water shall be added to the pavement during finishing operations.

3.5.5 Texturing

Before the surface sheen has disappeared and before the concrete hardens, the surface of the pavement shall be given a texture as described herein. Following initial texturing on the first day of placement, the Placing Foreman, Contracting Officer representative, and a representative of the Using Agency shall inspect the texturing for compliance with design requirements. After curing is complete, all textured surfaces shall be thoroughly power broomed to remove all debris. The concrete in areas of recesses for tie-down anchors, lighting fixtures, and other outlets in the pavement shall be finished to provide a surface of the same texture as the surrounding area.

3.5.5.1 Fabric-Drag Surface Finish

Surface texture shall be applied by dragging the surface of the pavement, in the direction of the concrete placement, with a moist fabric drag. The dragging shall produce a uniform finished surface having a fine sandy texture without disfiguring marks.

3.5.6 Edging

After texturing has been completed, the edge of the slabs along the forms shall be carefully finished with an edging tool to form a smooth rounded surface of 1/8 inch radius. No water shall be added to the surface during edging.

3.6 CURING

Concrete shall be continuously protected against loss of moisture and rapid temperature changes for at least 7 days from the completion of finishing operations. Unhardened concrete shall be protected from rain and flowing water. During hot weather with low humidity and/or wind, the Contractor

shall institute measures to prevent plastic shrinkage cracks from developing. ACI 305R contains means of predicting plastic shrinkage cracking and preventative measures. Plastic shrinkage cracks that occur shall be filled by injection of epoxy resin after the concrete hardens. Plastic shrinkage cracks shall never be troweled over or filled with slurry. Curing shall be accomplished by one of the following methods.

3.6.1 Membrane Curing

A uniform coating of white-pigmented membrane-forming curing compound shall be applied to the entire exposed surface of the concrete including pavement edges as soon as the free water has disappeared from the surface after finishing. If evaporation is high and no moisture is present on the surface even though bleeding has not stopped, fog sprays shall be used to keep the surface moist until setting of the cement occurs. Curing compound shall then be immediately applied. Curing compound shall be applied to the finished surfaces by means of a self-propelled automatic spraying machine, equipped with multiple spraying nozzles with wind shields, spaning the newly paved lane. The curing compound shall be applied at a maximum application rate of 200 square feet per gallon. The application of curing compound by hand-operated, mechanical powered pressure sprayers will be permitted only on odd widths or shapes of slabs where indicated and on concrete surfaces exposed by the removal of forms. The compound shall form a uniform, continuous, cohesive film that will not check, crack, or peel and that will be free from pinholes and other discontinuities. Areas where the curing compound develops the above defects or is damaged by heavy rainfall, sawing or other construction operations within the curing period, shall be immediately resprayed.

3.6.2 Moist Curing

Concrete to be moist-cured shall be maintained continuously wet for the entire curing period, commencing immediately after finishing. Surfaces shall be cured by ponding, by continuous sprinkling, by continuously saturated burlap or cotton mats, or by continuously saturated plastic coated burlap. Impervious sheet curing shall not be used.

3.7 JOINTS

No deviation from the jointing pattern shown on the drawings shall be made without written approval of the Design District Pavement or Geotechnical Engineer. All joints shall be straight, perpendicular to the finished grade of the pavement, and continuous from edge to edge or end to end of the pavement with no abrupt offset and no gradual deviation greater than 1/2 inch.

3.7.1 Longitudinal Construction Joints

Dowels shall be installed in the longitudinal construction joints, or the edges shall be thickened as indicated.

3.7.2 Transverse Construction Joints

Transverse construction joints shall be installed at a planned transverse joint, at the end of each day's placing operations and when concrete placement is interrupted. Transverse construction joints shall be constructed either by utilizing headers and hand placement and finishing techniques, or by placing concrete beyond the transverse construction joint location and then saw cutting full depth and removing concrete back to the

transverse construction joint location. For the latter case, dowels shall be installed using methods for dowels installed in hardened concrete described above. All transverse construction joints shall be dowelled.

3.7.3 Expansion Joints

Expansion joints shall be formed where indicated, and about any structures and features that project through or into the pavement, using preformed joint filler of the type, thickness, and width indicated, and shall extend the full slab depth. Edges of the concrete at the joint face shall be edged. The joint filler strips shall be installed to form a recess at the pavement surface to be filled with joint sealant. Expansion joints shall be constructed with thickened edges for load transfer.

3.7.4 Slip Joints

Slip joints shall be installed the full depth of the slab using expansion joint preformed joint filler material attached to the face of the original concrete placement. A reservoir for joint sealant shall be constructed at the top of the joint. Edges of the joint face shall be edged.

3.7.5 Contraction Joints

Transverse and longitudinal contraction joints shall be of the weakened-plane or dummy type. Longitudinal contraction joints shall be constructed by sawing a groove in the hardened concrete with a power-driven saw. Transverse contraction joints shall be constructed in conformance with requirements for sawed joints.

3.7.5.1 Sawed Joints

Sawed contraction joints shall be constructed by sawing a groove in the concrete with a 1/8 inch blade to the indicated depth. The time of initial sawing shall vary depending on existing and anticipated weather conditions and shall be such as to prevent uncontrolled cracking of the pavement. Sawing of the joints shall commence as soon as the concrete has hardened sufficiently to permit cutting the concrete without chipping, spalling, or tearing. The joints shall be sawed at the required spacing consecutively in the sequence of the concrete placement. Sawing at a given joint location shall be discontinued when a crack develops ahead of the saw cut. Immediately after the joint is sawed, the saw cut and adjacent concrete surface shall be thoroughly flushed with water until all waste from sawing is removed from the joint. The surface shall be resprayed with curing compound as soon as free water disappears. The top of the joint opening and the joint groove at exposed edges shall be tightly sealed with cord or backer rod before the concrete in the region of the joint is resprayed with curing compound.

3.7.6 Thickened Edge Joints

Underlying material in the transition area shall meet the requirements for smoothness and compaction specified for all other areas of the underlying material.

3.8 REPAIR, REMOVAL, AND REPLACEMENT OF SLABS

New pavement slabs that contain full-depth cracks shall be removed and replaced, as specified herein at no cost to the Government. Removal and replacement shall be full depth, shall be full width of the paving lane,

and the limit of removal shall be from each original transverse joint . The Contracting Officer will determine whether cracks extend full depth of the pavement and may require minimum 6 inch diameter cores to be drilled on the crack to determine depth of cracking. Cores shall be drilled and the hole later filled by the Contractor with a well consolidated concrete mixture bonded to the walls of the hole with epoxy resin. Drilling of cores and refilling holes shall be at no expense to the Government. Cracks that do not extend full depth of slab shall be cleaned and then pressure injected with epoxy resin, Type IV, Grade 1. The Contractor shall ensure that the crack is not widened during epoxy resin injection. Where a full depth crack intersects the original transverse joint, the slab(s) containing the crack shall be removed and replaced, with dowels installed, as required below. Spalls along joints shall be repaired as specified.

3.8.1 Removal and Replacement of Full Slabs

Unless there are keys or dowels present, all edges of the slab shall be sawcut full depth. If keys, dowels, or tie bars are present along any edges, these edges shall be sawed full depth 6 inches from the edge if only keys are present, or just beyond the end of dowels or tie bars if they are present. These joints shall then be carefully sawed on the joint line to within 1 inch of the depth of the dowel or key. The main slab shall be further divided by sawing full depth, at appropriate locations, and each piece lifted out and removed. The narrow strips along keyed or doweled edges shall be carefully broken up and removed. Care shall be taken to prevent damage to the dowels, tie bars, or keys or to concrete to remain in place. Protruding portions of dowels shall be painted and lightly oiled. The joint face below keys or dowels shall be suitably trimmed so that there is no abrupt offset. If underbreak occurs at any point along any edge, the area shall be hand-filled with concrete, producing an even joint face from top to bottom, before replacing the removed slab. If underbreak over 4 inches deep occurs, the entire slab containing the underbreak shall be removed and replaced. Where there are no dowels, tie bars, or keys on an edge, or where they have been damaged, dowels of the size and spacing as specified for other joints in similar pavement shall be installed by epoxy grouting them into holes drilled into the existing concrete. Original damaged dowels or tie bars shall be cut off flush with the joint face. All four edges of the new slab shall thus contain dowels or original keys or original tie bars. Prior to placement of new concrete, the underlying material shall be graded and recompacted, and the surfaces of all four joint faces shall be cleaned of all loose material and contaminants, and coated with a double application of membrane forming curing compound as bond breaker. Placement of concrete shall be as specified for original construction. The resulting joints around the new slab shall be prepared and sealed as specified.

3.8.2 Repairing Spalls Along Joints

Spalls along joints and cracks shall be repaired by first making a vertical saw cut at least 1 inch outside the spalled area and to a depth of at least 2 inches. Saw cuts shall be straight lines forming rectangular areas. The concrete between the saw cut and the joint, or crack, shall be chipped out to remove all unsound concrete. The cavity shall be thoroughly cleaned with high pressure water jets supplemented with compressed air to remove all loose material. Immediately before filling the cavity, a prime coat shall be applied to the dry cleaned surface of all sides and bottom of the cavity, except any joint face. The prime coat shall be applied in a thin coating and scrubbed into the surface with a stiff-bristle brush. Prime coat for portland cement repairs shall be a neat cement grout and for

epoxy resin repairs shall be epoxy resin, Type III, Grade 1. The cavity shall be filled with low slump portland cement concrete or mortar, or with epoxy resin concrete or mortar. Portland cement concrete shall be used for larger spalls, those more than 1/3 cu. ft. in size after removal operations; portland cement mortar shall be used for spalls between 0.03 and 1/3 cu. ft; and epoxy resin mortar or Type III, Grade 3 epoxy resin for those spalls less than 0.03 cu. ft. in size after removal operations. Portland cement concretes and mortars shall be very low slump mixtures, proportioned, mixed, placed, tamped, and cured. If the materials and procedures are approved in writing, latex modified concrete mixtures may be used for repairing spalls less than 1/3 cu.ft. in size. Epoxy resin mortars shall be made with Type III, Grade 1, epoxy resin, using proportions, mixing, placing, tamping and curing procedures as recommended by the manufacturer. Any repair material on the surrounding surfaces of the existing concrete shall be removed before it hardens. Where the spalled area abuts a joint, an insert or other bond-breaking medium shall be used to prevent bond at the joint face. A reservoir for the joint sealant shall be sawed to the dimensions required for other joints. In lieu of sawing, spalls not adjacent to joints, and popouts, both less than 6 inches in maximum dimension, may be prepared by drilling a core 2 inches in diameter greater than the size of the defect, centered over the defect, and 2 inches deep or 1/2 inch into sound concrete, whichever is greater. The core hole shall be repaired as specified above for other spalls.

3.8.3 Areas Defective in Plan Grade or Smoothness

In areas not meeting the specified limits for surface smoothness and plan grade, high areas shall be reduced to attain the required smoothness and grade, except as depth is limited below. High areas shall be reduced by grinding the hardened concrete with a surface grinding machine after the concrete is 14 days or more old. The depth of grinding shall not exceed 1/4 inch. All pavement areas requiring plan grade or surface smoothness corrections in excess of the specified limits, shall be removed and replaced. In pavement areas given a wire comb or tined texture, areas exceeding 25 square feet that have been corrected by rubbing or grinding shall be retextured by grooving machine sawn grooves meeting the requirements for the wire comb or tined texture. All areas in which grinding has been performed will be subject to the thickness tolerances specified in paragraph Thickness. Any grinding performed on individual slabs with excessive deficiencies shall be performed at the Contractor's own decision without entitlement to additional compensation if eventual removal of the slab is required.

3.9 EXISTING CONCRETE PAVEMENT REMOVAL AND REPAIR

Existing concrete pavement shall be removed as indicated and as specified in Section 02220 DEMOLITION modified, and expanded as specified herein. Removal, repair and replacement shall be made as indicated and as specified in paragraph REPAIR, REMOVAL, AND REPLACEMENT OR SLABS.

3.10 PAVEMENT PROTECTION

The Contractor shall protect the pavement against all damage prior to final acceptance of the work. Traffic shall be excluded from the new pavement. As a construction expedient in paving intermediate lanes between newly paved pilot lanes, operation of the hauling equipment will be permitted on the new pavement after the pavement has been cured for 7 days and the joints have been sealed or otherwise protected. All new and existing pavement carrying construction traffic or equipment shall be continuously

kept completely clean. Special cleaning and care shall be used where Contractor's traffic uses or crosses active airfield pavement.

3.11 TESTING AND INSPECTION FOR CONTRACTOR QUALITY CONTROL (CQC)

Paragraph ACCEPTABILITY OF WORK contains additional CQC requirements. The Contractor shall perform the inspection and tests described below and, based upon the results of these inspections and tests, shall take the action required and submit reports as specified. When, in the opinion of the Contracting Officer, the paving operation is out of control, concrete placement shall cease.

3.11.1 Batch Plant Control

A daily report shall be prepared indicating checks made for scale accuracy with test weights, checks of batching accuracy, and corrective action taken prior to and during placement for weighing or batching, type and source of cement used, type and source of pozzolan or slag used, amount and source of admixtures used, aggregate source, the required aggregate and water masses per cubic yd, amount of water as free moisture in each size of aggregate, and the batch aggregate and water masses per cubic yd. for each class of concrete batched during each day's plant operation.

3.11.2 Concrete Mixture

a. Air Content Testing. Air content tests shall be made when test specimens are fabricated. In addition, at least two other tests for air content shall be made on randomly selected batches of each separate concrete mixture produced during each 8-hour period of paving. Whenever air content reaches specified limits, an immediate confirmatory test shall be made. If the second test also shows air content at or exceeding specified limits, an adjustment shall immediately be made in the amount of air-entraining admixture batched to bring air content within specified limits. If the next adjusted batch of concrete is not within specified limits, concrete placement shall be halted until concrete air content is within specified limits.

b. Slump Testing. Slump tests shall be made when test specimens are fabricated. Additional tests shall be made when excessive variation in workability is reported by the placing foreman or Government inspector. Whenever slump approaches the maximum limit, an adjustment shall immediately be made in the batch masses of water and fine aggregate, without exceeding the maximum w/(c+p). When a slump result exceeds the specification limit, no further concrete shall be delivered to the paving site until adjustments have been made and slump is again within the limit.

c. Temperature. The temperature of the concrete shall be measured when strength specimens are fabricated.

d. Concrete Strength Testing. Four (4) cylinders from the same batch shall be fabricated, cured and tested for compressive strength, testing two cylinders at 7-day and two cylinders at 28-day age. A minimum of one set of four (4) cylinders shall be fabricated, cured and tested for each shift of concrete placement. Control charts for strength, showing the 7-day and 28-day CQC compressive strengths, and the 28-day required compressive strength, shall be maintained and submitted with weekly CQC Reports.

3.11.3 Inspection Before Placing

Underlying materials, joint locations and types, construction joint faces, forms, reinforcing, dowels, and embedded items shall be inspected by a Registered Engineer in sufficient time prior to each paving operation in order to certify to the Contracting Officer that they are ready to receive concrete. The results of each inspection shall be reported in writing, and the certification signed by the Registered Engineer, prior to each days' paving.

3.11.4 Paving Operations

The placing foreman shall supervise all placing and paving operations, shall determine that the correct quality of concrete is placed in each location as shown, shall insure that the concrete is consolidated full depth and that finishing is performed as specified. The placing foreman shall be responsible for measuring and recording concrete temperatures and ambient temperature hourly during placing operations, weather conditions, time of placement, volume of concrete placed, and method of paving and any problems encountered.

3.11.5 Curing Inspection

a. Moist Curing Inspections. Each day on both work and non-work days, an inspection shall be made of all areas subject to moist curing. The surface moisture condition shall be noted and recorded. When any inspection finds an area of inadequate curing, immediate corrective action shall be taken, and the required curing period for the area shall be extended by 1 day.

b. Membrane Curing Inspection. At the end of each day's placement, the CQC Representative shall determine the quantity of compound used by measurement of the container; shall determine the area of concrete surface covered; shall then compute the rate of coverage in square feet per gallon and shall also note whether or not coverage is uniform. When the coverage rate of the curing compound is less than that specified or when the coverage is not uniform, the entire surface shall be sprayed again.

3.11.6 Cold-Weather Protection

At least once per day, an inspection shall be made of all areas subject to cold-weather protection. Any deficiencies shall be noted, corrected, and reported.

3.11.7 Reports

All results of tests or inspections conducted shall be reported informally as they are completed and in writing daily. A weekly report, signed by a registered engineer, shall be prepared for the updating of control charts and test data, and all CQC inspections and actions covering the entire period from the start of the construction through the current week. Reports of failures and the action taken shall be confirmed in writing in the routine reports. The Contracting Officer has the right to examine all CQC records. A copy of weekly reports shall be faxed to the Design District Pavement or Geotechnical Engineer. At the completion of concrete placement, a certification report shall be prepared containing mix designs, all updated control charts and concrete test data, quality control reports,

smoothness reports, and other pertinent data on the concrete, with a certification by a registered engineer that the concrete placed meets all specification requirements. A copy of the certification report shall be mailed to the Design District pavement or Geotechnical Engineer.

-- End of Section --

SECTION TABLE OF CONTENTS

DIVISION 02 - SITE CONSTRUCTION

SECTION 02770A

CONCRETE SIDEWALKS AND CURBS AND GUTTERS

03/98

PART 1 GENERAL

1.1 REFERENCES
1.2 SUBMITTALS
1.3 WEATHER LIMITATIONS
1.3.1 Placing During Cold Weather
1.3.2 Placing During Warm Weather
1.4 PLANT, EQUIPMENT, MACHINES, AND TOOLS
1.4.1 General Requirements

PART 2 PRODUCTS

2.1 CONCRETE
2.1.1 Air Content
2.1.2 Slump
2.2 CONCRETE CURING MATERIALS
2.2.1 Impervious Sheet Materials
2.2.2 Burlap
2.2.3 White Pigmented Membrane-Forming Curing Compound
2.3 CONCRETE PROTECTION MATERIALS
2.4 JOINT FILLER STRIPS
2.4.1 Contraction Joint Filler for Curb and Gutter
2.4.2 Expansion Joint Filler, Premolded
2.5 JOINT SEALANTS
2.5.1 Joint Sealant, Cold-Applied
2.5.2 Joint Sealant, Hot-Poured
2.6 FORM WORK
2.6.1 Sidewalk Forms

PART 3 EXECUTION

3.1 SUBGRADE PREPARATION
3.1.1 Sidewalk Subgrade
3.1.2 Maintenance of Subgrade
3.2 FORM SETTING
3.2.1 Sidewalks
3.3 SIDEWALK CONCRETE PLACEMENT AND FINISHING
3.3.1 Formed Sidewalks
3.3.2 Concrete Finishing
3.3.3 Edge and Joint Finishing
3.3.4 Surface and Thickness Tolerances
3.4 CURB AND GUTTER CONCRETE PLACEMENT AND FINISHING
3.4.1 Formed Curb and Gutter
3.4.2 Curb and Gutter Finishing
3.4.3 Concrete Finishing
3.4.4 Joint Finishing
3.4.5 Surface and Thickness Tolerances
3.5 SIDEWALK JOINTS

3.5.1 Sidewalk Contraction Joints
3.5.2 Sidewalk Expansion Joints
3.6 CURB AND GUTTER JOINTS
3.6.1 Contraction Joints
3.6.2 Expansion Joints
3.7 CURING AND PROTECTION
3.7.1 General Requirements
3.7.1.1 Mat Method
3.7.1.2 Impervious Sheeting Method
3.7.1.3 Membrane Curing Method
3.7.2 Backfilling
3.7.3 Protection
3.8 FIELD QUALITY CONTROL
3.8.1 General Requirements
3.8.2 Concrete Testing
3.8.2.1 Strength Testing
3.8.2.2 Air Content
3.8.2.3 Slump Test
3.8.3 Thickness Evaluation
3.8.4 Surface Evaluation
3.9 SURFACE DEFICIENCIES AND CORRECTIONS
3.9.1 Thickness Deficiency
3.9.2 High Areas
3.9.3 Appearance

-- End of Section Table of Contents --

UFGS-02770A (March 1998)

SECTION 02770A

CONCRETE SIDEWALKS AND CURBS AND GUTTERS
03/98

PART 1 GENERAL

1.1 REFERENCES

The publications listed below form a part of this specification to the extent referenced. The publications are referred to in the text by basic designation only.

AMERICAN ASSOCIATION OF STATE HIGHWAY AND TRANSPORTATION OFFICIALS (AASHTO)

AASHTO M 182	(1991) Burlap Cloth Made from Jute or Kenaf

AMERICAN SOCIETY FOR TESTING AND MATERIALS (ASTM)

ASTM C 31/C 31M	(1996) Making and Curing Concrete Test Specimens in the Field
ASTM C 143	(1990a) Slump of Hydraulic Cement Concrete
ASTM C 171	(1997) Sheet Materials for Curing Concrete
ASTM C 172	(1997) Sampling Freshly Mixed Concrete
ASTM C 173	(1996) Air Content of Freshly Mixed Concrete by the Volumetric Method
ASTM C 231	(1997) Air Content of Freshly Mixed Concrete by the Pressure Method
ASTM C 309	(1997) Liquid Membrane-Forming Compounds for Curing Concrete
ASTM C 920	(1995) Elastomeric Joint Sealants
ASTM D 1751	(1983; R 1991) Preformed Expansion Joint Filler for Concrete Paving and Structural Construction (Nonextruding and Resilient Bituminous Types)
ASTM D 3405	(1996) Joint Sealants, Hot-Applied, for Concrete and Asphalt Pavements

1.2 SUBMITTALS

Government approval is required for submittals with a "G" designation; submittals not having a "G" designation are for information only. When used, a designation following the "G" designation identifies the office that will review the submittal for the Government. The following shall be

submitted in accordance with Section 01330 SUBMITTAL PROCEDURES:

SD-06 Test Reports

Field Quality Control

Copies of all test reports within 24 hours of completion of the test.

1.3 WEATHER LIMITATIONS

1.3.1 Placing During Cold Weather

Concrete placement shall not take place when the air temperature reaches 40 degrees F and is falling, or is already below that point. Placement may begin when the air temperature reaches 35 degrees F and is rising, or is already above 40 degrees F. Provisions shall be made to protect the concrete from freezing during the specified curing period. If necessary to place concrete when the temperature of the air, aggregates, or water is below 35 degrees F, placement and protection shall be approved in writing. Approval will be contingent upon full conformance with the following provisions. The underlying material shall be prepared and protected so that it is entirely free of frost when the concrete is deposited. Mixing water shall be heated as necessary to result in the temperature of the in-place concrete being between 50 and 85 degrees F. Methods and equipment for heating shall be approved. The aggregates shall be free of ice, snow, and frozen lumps before entering the mixer. Covering and other means shall be provided for maintaining the concrete at a temperature of at least 50 degrees F for not less than 72 hours after placing, and at a temperature above freezing for the remainder of the curing period.

1.3.2 Placing During Warm Weather

The temperature of the concrete as placed shall not exceed 85 degrees F except where an approved retarder is used. The mixing water and/or aggregates shall be cooled, if necessary, to maintain a satisfactory placing temperature. The placing temperature shall not exceed 95 degrees F at any time.

1.4 PLANT, EQUIPMENT, MACHINES, AND TOOLS

1.4.1 General Requirements

Plant, equipment, machines, and tools used in the work shall be subject to approval and shall be maintained in a satisfactory working condition at all times. The equipment shall have the capability of producing the required product, meeting grade controls, thickness control and smoothness requirements as specified. Use of the equipment shall be discontinued if it produces unsatisfactory results. The Contracting Officer shall have access at all times to the plant and equipment to ensure proper operation and compliance with specifications.

PART 2 PRODUCTS

2.1 CONCRETE

Concrete shall conform to the applicable requirements of Section 03307A CONCRETE FOR MINOR STRUCRURES except as otherwise specified. Concrete shall have a minimum compressive strength of 3500 psi at 28 days. Maximum

size of aggregate shall be 1-1/2 inches.

2.1.1 Air Content

Mixtures may have air content by volume of concrete of 3 to 6 percent, based on measurements made immediately after discharge from the mixer.

2.1.2 Slump

The concrete slump shall be 3 inches plus or minus 1 inch for hand placed concrete and 1 inch plus or minus 1/2-inch for slipformed concrete where determined in accordance with ASTM C 143.

2.2 CONCRETE CURING MATERIALS

2.2.1 Impervious Sheet Materials

Impervious sheet materials shall conform to ASTM C 171, type optional, except that polyethylene film, if used, shall be white opaque.

2.2.2 Burlap

Burlap shall conform to AASHTO M 182.

2.2.3 White Pigmented Membrane-Forming Curing Compound

White pigmented membrane-forming curing compound shall conform to ASTM C 309, Type 2.

2.3 CONCRETE PROTECTION MATERIALS

Concrete protection materials shall be a linseed oil mixture of equal parts, by volume, of linseed oil and either mineral spirits, naphtha, or turpentine. At the option of the contractor, commercially prepared linseed oil mixtures, formulated specifically for application to concrete to provide protection against the action of deicing chemicals may be used, except that emulsified mixtures are not acceptable.

2.4 JOINT FILLER STRIPS

2.4.1 Contraction Joint Filler for Curb and Gutter

Contraction joint filler for curb and gutter shall consist of hard-pressed fiberboard.

2.4.2 Expansion Joint Filler, Premolded

Expansion joint filler, premolded, shall conform to ASTM D 1751, 3/8 inch thick, unless otherwise indicated.

2.5 JOINT SEALANTS

2.5.1 Joint Sealant, Cold-Applied

Joint sealant, cold-applied shall conform to ASTM C 920.

2.5.2 Joint Sealant, Hot-Poured

Joint sealant, hot-poured shall conform to ASTM D 3405.

2.6 FORM WORK

Form work shall be designed and constructed to ensure that the finished concrete will conform accurately to the indicated dimensions, lines, and elevations, and within the tolerances specified. Forms shall be of wood or steel, straight, of sufficient strength to resist springing during depositing and consolidating concrete. Wood forms shall be surfaced plank, 2 inches nominal thickness, straight and free from warp, twist, loose knots, splits or other defects. Wood forms shall have a nominal length of 10 feet. Radius bends may be formed with 3/4 inch boards, laminated to the required thickness. Steel forms shall be channel-formed sections with a flat top surface and with welded braces at each end and at not less than two intermediate points. Ends of steel forms shall be interlocking and self-aligning. Steel forms shall include flexible forms for radius forming, corner forms, form spreaders, and fillers. Steel forms shall have a nominal length of 10 feet with a minimum of 3 welded stake pockets per form. Stake pins shall be solid steel rods with chamfered heads and pointed tips designed for use with steel forms.

2.6.1 Sidewalk Forms

Sidewalk forms shall be of a height equal to the full depth of the finished sidewalk.

PART 3 EXECUTION

3.1 SUBGRADE PREPARATION

The subgrade shall be constructed to the specified grade and cross section prior to concrete placement. Subgrade shall be placed and compacted in conformance with Section 02300, Earthwork.

3.1.1 Sidewalk Subgrade

The subgrade shall be tested for grade and cross section with a template extending the full width of the sidewalk and supported between side forms.

3.1.2 Maintenance of Subgrade

The subgrade shall be maintained in a smooth, compacted condition in conformity with the required section and established grade until the concrete is placed. The subgrade shall be in a moist condition when concrete is placed. The subgrade shall be prepared and protected to produce a subgrade free from frost when the concrete is deposited.

3.2 FORM SETTING

Forms shall be set to the indicated alignment, grade and dimensions. Forms shall be held rigidly in place by a minimum of 3 stakes per form placed at intervals not to exceed 4 feet. Corners, deep sections, and radius bends shall have additional stakes and braces, as required. Clamps, spreaders, and braces shall be used where required to ensure rigidity in the forms. Forms shall be removed without injuring the concrete. Bars or heavy tools shall not be used against the concrete in removing the forms. Any concrete found defective after form removal shall be promptly and satisfactorily repaired. Forms shall be cleaned and coated with form oil each time before concrete is placed. Wood forms may, instead, be thoroughly wetted with water before concrete is placed, except that with probable freezing

temperatures, oiling is mandatory.

3.2.1 Sidewalks

Forms for sidewalks shall be set with the upper edge true to line and grade with an allowable tolerance of 1/8 inch in any 10 foot long section. After forms are set, grade and alignment shall be checked with a 10 foot straightedge. Forms shall have a transverse slope as indicated with the low side adjacent to the roadway. Side forms shall not be removed for 12 hours after finishing has been completed.

3.3 SIDEWALK CONCRETE PLACEMENT AND FINISHING

3.3.1 Formed Sidewalks

Concrete shall be placed in the forms in one layer. When consolidated and finished, the sidewalks shall be of the thickness indicated. After concrete has been placed in the forms, a strike-off guided by side forms shall be used to bring the surface to proper section to be compacted. The concrete shall be consolidated with an approved vibrator, and the surface shall be finished to grade with a strike off.

3.3.2 Concrete Finishing

After straightedging, when most of the water sheen has disappeared, and just before the concrete hardens, the surface shall be finished with a wood float or darby to a smooth and uniformly fine granular or sandy texture free of waves, irregularities, or tool marks. A scored surface shall be produced by brooming with a fiber-bristle brush in a direction transverse to that of the traffic, followed by edging.

3.3.3 Edge and Joint Finishing

All slab edges, including those at formed joints, shall be finished with an edger having a radius of 1/8 inch. Transverse joint shall be edged before brooming, and the brooming shall eliminate the flat surface left by the surface face of the edger. Corners and edges which have crumbled and areas which lack sufficient mortar for proper finishing shall be cleaned and filled solidly with a properly proportioned mortar mixture and then finished.

3.3.4 Surface and Thickness Tolerances

Finished surfaces shall not vary more than 5/16 inch from the testing edge of a 10-foot straightedge. Permissible deficiency in section thickness will be up to 1/4 inch.

3.4 CURB AND GUTTER CONCRETE PLACEMENT AND FINISHING

3.4.1 Formed Curb and Gutter

Concrete shall be placed to the section required in a single lift. Consolidation shall be achieved by using approved mechanical vibrators. Curve shaped gutters shall be finished with a standard curb "mule".

3.4.2 Curb and Gutter Finishing

Approved slipformed curb and gutter machines may be used in lieu of hand placement.

3.4.3 Concrete Finishing

Exposed surfaces shall be floated and finished with a smooth wood float until true to grade and section and uniform in texture. Floated surfaces shall then be brushed with a fine-hair brush with longitudinal strokes. The edges of the gutter and top of the curb shall be rounded with an edging tool to a radius of 1/2 inch. Immediately after removing the front curb form, the face of the curb shall be rubbed with a wood or concrete rubbing block and water until blemishes, form marks, and tool marks have been removed. The front curb surface, while still wet, shall be brushed in the same manner as the gutter and curb top. The top surface of gutter and entrance shall be finished to grade with a wood float.

3.4.4 Joint Finishing

Curb edges at formed joints shall be finished as indicated.

3.4.5 Surface and Thickness Tolerances

Finished surfaces shall not vary more than 1/4 inch from the testing edge of a 10-foot straightedge. Permissible deficiency in section thickness will be up to 1/4 inch.

3.5 SIDEWALK JOINTS

Sidewalk joints shall be constructed to divide the surface into rectangular areas. Transverse contraction joints shall be spaced at a distance equal to the sidewalk width or 5 feet on centers, whichever is less, and shall be continuous across the slab. Longitudinal contraction joints shall be constructed along the centerline of all sidewalks 10 feet or more in width. Transverse expansion joints shall be installed at sidewalk returns and opposite expansion joints in adjoining curbs. Where the sidewalk is not in contact with the curb, transverse expansion joints shall be installed at 40 foot intervals. Expansion joints shall be formed about structures and features which project through or into the sidewalk pavement, using joint filler of the type, thickness, and width indicated.

3.5.1 Sidewalk Contraction Joints

The contraction joints shall be formed in the fresh concrete by cutting a groove in the top portion of the slab to a depth of at least one-fourth of the sidewalk slab thickness, using a jointer to cut the groove, or by sawing a groove in the hardened concrete with a power-driven saw, unless otherwise approved. Sawed joints shall be constructed by sawing a groove in the concrete with a 1/8 inch blade to the depth indicated. An ample supply of saw blades shall be available on the job before concrete placement is started, and at least one standby sawing unit in good working order shall be available at the jobsite at all times during the sawing operations.

3.5.2 Sidewalk Expansion Joints

Expansion joints shall be formed with 3/8 inch joint filler strips. Joint filler shall be placed with top edge 1/4 inch below the surface and shall be held in place with steel pins or other devices to prevent warping of the filler during floating and finishing. Immediately after finishing operations are completed, joint edges shall be rounded with an edging tool having a radius of 1/8 inch, and concrete over the joint filler shall be

removed. At the end of the curing period, expansion joints shall be cleaned and filled with joint sealant. The joint opening shall be thoroughly cleaned before the sealing material is placed. Sealing material shall not be spilled on exposed surfaces of the concrete. Concrete at the joint shall be surface dry and atmospheric and concrete temperatures shall be above 50 degrees F at the time of application of joint sealing material. Excess material on exposed surfaces of the concrete shall be removed immediately and concrete surfaces cleaned.

3.6 CURB AND GUTTER JOINTS

Curb and gutter joints shall be constructed at right angles to the line of curb and gutter.

3.6.1 Contraction Joints

Contraction joints shall be constructed directly opposite contraction joints in abutting portland cement concrete pavements and spaced so that monolithic sections between curb returns will not be less than 5 feet nor greater than 15 feet in length. Contraction joints shall be constructed by means of 1/8 inch thick separators and of a section conforming to the cross section of the curb and gutter. Separators shall be removed as soon as practicable after concrete has set sufficiently to preserve the width and shape of the joint and prior to finishing.

3.6.2 Expansion Joints

Expansion joints shall be formed by means of preformed expansion joint filler material cut and shaped to the cross section of curb and gutter. Expansion joints shall be provided in curb and gutter directly opposite expansion joints of abutting portland cement concrete pavement, and shall be of the same type and thickness as joints in the pavement. Where curb and gutter do not abut portland cement concrete pavement, expansion joints at least 3/8 inch in width shall be provided at intervals not exceeding 40 feet. Expansion joints shall be sealed immediately following curing of the concrete or as soon thereafter as weather conditions permit. Expansion joints and the top 1 inch depth of curb and gutter contraction-joints shall be sealed with joint sealant. The joint opening shall be thoroughly cleaned before the sealing material is placed. Sealing material shall not be spilled on exposed surfaces of the concrete. Concrete at the joint shall be surface dry and atmospheric and concrete temperatures shall be above 50 degrees F at the time of application of joint sealing material. Excess material on exposed surfaces of the concrete shall be removed immediately and concrete surfaces cleaned.

3.7 CURING AND PROTECTION

3.7.1 General Requirements

Concrete shall be protected against loss of moisture and rapid temperature changes for at least 7 days from the beginning of the curing operation. Unhardened concrete shall be protected from rain and flowing water. All equipment needed for adequate curing and protection of the concrete shall be on hand and ready for use before actual concrete placement begins. Protection shall be provided as necessary to prevent cracking of the pavement due to temperature changes during the curing period.

3.7.1.1 Mat Method

The entire exposed surface shall be covered with 2 or more layers of burlap. Mats shall overlap each other at least 6 inches.The mat shall be thoroughly wetted with water prior to placing on concrete surface and shall be kept continuously in a saturated condition and in intimate contact with concrete for not less than 7 days.

3.7.1.2 Impervious Sheeting Method

The entire exposed surface shall be wetted with a fine spray of water and then covered with impervious sheeting material. Sheets shall be laid directly on the concrete surface with the light-colored side up and overlapped 12 inches when a continuous sheet is not used. The curing medium shall not be less than 18-inches wider than the concrete surface to be cured, and shall be securely weighted down by heavy wood planks, or a bank of moist earth placed along edges and laps in the sheets. Sheets shall be satisfactorily repaired or replaced if torn or otherwise damaged during curing. The curing medium shall remain on the concrete surface to be cured for not less than 7 days.

3.7.1.3 Membrane Curing Method

A uniform coating of white-pigmented membrane-curing compound shall be applied to the entire exposed surface of the concrete as soon after finishing as the free water has disappeared from the finished surface. Formed surfaces shall be coated immediately after the forms are removed and in no case longer than 1 hour after the removal of forms. Concrete shall not be allowed to dry before the application of the membrane. If any drying has occurred, the surface of the concrete shall be moistened with a fine spray of water and the curing compound applied as soon as the free water disappears. Curing compound shall be applied in two coats by hand-operated pressure sprayers at a coverage of approximately 200 square feet per gallon for the total of both coats. The second coat shall be applied in a direction approximately at right angles to the direction of application of the first coat. The compound shall form a uniform, continuous, coherent film that will not check, crack, or peel and shall be free from pinholes or other imperfections. If pinholes, abrasion, or other discontinuities exist, an additional coat shall be applied to the affected areas within 30 minutes. Concrete surfaces that are subjected to heavy rainfall within 3 hours after the curing compound has been applied shall be resprayed by the method and at the coverage specified above. Areas where the curing compound is damaged by subsequent construction operations within the curing period shall be resprayed. Necessary precautions shall be taken to insure that the concrete is properly cured at sawed joints, and that no curing compound enters the joints. The top of the joint opening and the joint groove at exposed edges shall be tightly sealed before the concrete in the region of the joint is resprayed with curing compound. The method used for sealing the joint groove shall prevent loss of moisture from the joint during the entire specified curing period. Approved standby facilities for curing concrete pavement shall be provided at a location accessible to the jobsite for use in the event of mechanical failure of the spraying equipment or other conditions that might prevent correct application of the membrane-curing compound at the proper time. Concrete surfaces to which membrane-curing compounds have been applied shall be adequately protected during the entire curing period from pedestrian and vehicular traffic, except as required for joint-sawing operations and surface tests, and from any other possible damage to the continuity of the membrane.

3.7.2 Backfilling

After curing, debris shall be removed and the area adjoining the concrete shall be backfilled, graded, and compacted to conform to the surrounding area in accordance with lines and grades indicated.

3.7.3 Protection

Completed concrete shall be protected from damage until accepted. The Contractor shall repair damaged concrete and clean concrete discolored during construction. Concrete that is damaged shall be removed and reconstructed for the entire length between regularly scheduled joints. Refinishing the damaged portion will not be acceptable. Removed damaged portions shall be disposed of as directed.

3.8 FIELD QUALITY CONTROL

3.8.1 General Requirements

The Contractor shall perform the inspection and tests described and meet the specified requirements for inspection details and frequency of testing. Based upon the results of these inspections and tests, the Contractor shall take the action and submit reports as required below, and any additional tests to insure that the requirements of these specifications are met.

3.8.2 Concrete Testing

3.8.2.1 Strength Testing

The Contractor shall provide molded concrete specimens for strength tests. Samples of concrete placed each day shall be taken not less than once a day nor less than once for every 250 cubic yards of concrete. The samples for strength tests shall be taken in accordance with ASTM C 172. Cylinders for acceptance shall be molded in conformance with ASTM C 31/C 31M by an approved testing laboratory. Each strength test result shall be the average of 2 test cylinders from the same concrete sample tested at 28 days, unless otherwise specified or approved. Concrete specified on the basis of compressive strength will be considered satisfactory if the averages of all sets of three consecutive strength test results equal or exceed the specified strength, and no individual strength test result falls below the specified strength by more than 500 psi.

3.8.2.2 Air Content

Air content shall be determined in accordance with ASTM C 173 or ASTM C 231. ASTM C 231 shall be used with concretes and mortars made with relatively dense natural aggregates. Two tests for air content shall be made on randomly selected batches of each class of concrete placed during each shift. Additional tests shall be made when excessive variation in concrete workability is reported by the placing foreman or the Government inspector. If results are out of tolerance, the placing foreman shall be notified and he shall take appropriate action to have the air content corrected at the plant. Additional tests for air content will be performed on each truckload of material until such time as the air content is within the tolerance specified.

3.8.2.3 Slump Test

Two slump tests shall be made on randomly selected batches of each class of concrete for every 250 cubic yards, or fraction thereof, of concrete placed during each shift. Additional tests shall be performed when excessive variation in the workability of the concrete is noted or when excessive crumbling or slumping is noted along the edges of slip-formed concrete.

3.8.3 Thickness Evaluation

The anticipated thickness of the concrete shall be determined prior to placement by passing a template through the formed section or by measuring the depth of opening of the extrusion template of the curb forming machine. If a slip form paver is used for sidewalk placement, the subgrade shall be true to grade prior to concrete placement and the thickness will be determined by measuring each edge of the completed slab.

3.8.4 Surface Evaluation

The finished surface of each category of the completed work shall be uniform in color and free of blemishes and form or tool marks.

3.9 SURFACE DEFICIENCIES AND CORRECTIONS

3.9.1 Thickness Deficiency

When measurements indicate that the completed concrete section is deficient in thickness by more than 1/4 inch the deficient section will be removed, between regularly scheduled joints, and replaced.

3.9.2 High Areas

In areas not meeting surface smoothness and plan grade requirements, high areas shall be reduced either by rubbing the freshly finished concrete with carborundum brick and water when the concrete is less than 36 hours old or by grinding the hardened concrete with an approved surface grinding machine after the concrete is 36 hours old or more. The area corrected by grinding the surface of the hardened concrete shall not exceed 5 percent of the area of any integral slab, and the depth of grinding shall not exceed 1/4 inch. Pavement areas requiring grade or surface smoothness corrections in excess of the limits specified above shall be removed and replaced.

3.9.3 Appearance

Exposed surfaces of the finished work will be inspected by the Government and any deficiencies in appearance will be identified. Areas which exhibit excessive cracking, discoloration, form marks, or tool marks or which are otherwise inconsistent with the overall appearances of the work shall be removed and replaced.

-- End of Section --

SECTION TABLE OF CONTENTS

DIVISION 02 - SITE CONSTRUCTION

SECTION 02821A

FENCING

04/04

PART 1 GENERAL

1.1 REFERENCES
1.2 SUBMITTALS

PART 2 PRODUCTS

2.1 FENCE FABRIC
2.1.1 Chain Link Fence Fabric
2.2 GATES
2.3 POSTS
2.3.1 Metal Posts for Chain Link Fence
2.4 BRACES AND RAILS
2.5 WIRE
2.5.1 Tension Wire
2.6 ACCESSORIES
2.7 CONCRETE
2.8 PADLOCKS

PART 3 EXECUTION

3.1 INSTALLATION
3.2 EXCAVATION
3.3 POST INSTALLATION
3.3.1 Posts for Chain Link Fence
3.4 BRACES AND TRUSS RODS
3.5 TENSION WIRES
3.6 CHAIN LINK FABRIC
3.7 BARBED WIRE SUPPORTING ARMS AND BARBED WIRE
3.7.1 General Requirements
3.8 GATE INSTALLATION

-- End of Section Table of Contents --

UFGS-02821A (April 2004)

SECTION 02821A

FENCING
04/04

PART 1 GENERAL

1.1 REFERENCES

The publications listed below form a part of this specification to the extent referenced. The publications are referred to within the text by the basic designation only.

ASTM INTERNATIONAL (ASTM)

ASTM A 153/A 153M	(2003) Zinc Coating (Hot-Dip) on Iron and Steel Hardware
ASTM A 392	(2003) Zinc-Coated Steel Chain-Link Fence Fabric
ASTM A 491	(2003) Aluminum-Coated Steel Chain-Link Fence Fabric
ASTM A 780	(2001) Repair of Damaged and Uncoated Areas of Hot-Dipped Galvanized Coatings
ASTM A 824	(2001) Metallic-Coated Steel Marcelled Tension Wire for Use With Chain Link Fence
ASTM C 94/C 94M	(2003a) Ready-Mixed Concrete
ASTM F 1043	(2000) Strength and Protective Coatings on Metal Industrial Chain-Link Fence Framework
ASTM F 1083	(1997; R 2003) Pipe, Steel, Hot-Dipped Zinc-Coated (Galvanized) Welded, for Fence Structures
ASTM F 1184	(2003) Industrial and Commercial Horizontal Slide Gates
ASTM F 626	(1996a; R 2003) Fence Fittings
ASTM F 883	(1997) Padlocks
ASTM F 900	(2003) Industrial and Commercial Swing Gates

1.2 SUBMITTALS

Government approval is required for submittals with a "G" designation; submittals not having a "G" designation are for information only. When used, a designation following the "G" designation identifies the office that will review the submittal for the Government. The following shall be

submitted in accordance with Section 01330 SUBMITTAL PROCEDURES:

SD-07 Certificates

Chain Link Fence

Statement, signed by an official authorized to certify on behalf of the manufacturer, attesting that the chain link fence and component materials meet the specified requirements.

PART 2 PRODUCTS

2.1 FENCE FABRIC

Fence fabric shall conform to the following:

2.1.1 Chain Link Fence Fabric

ASTM A 392, Class 1, zinc-coated steel wire with minimum coating weight of 1.2 ounces of zinc per square foot of coated surface, or ASTM A 491, Type I, aluminum-coated steel wire. Fabric shall be fabricated of 9 gauge wire woven in 2 inch mesh. Fabric height shall be 6 feet. Fabric shall be twisted and barbed on the top selvage and knuckled on the bottom selvage.

2.2 GATES

ASTM F 900 and/or ASTM F 1184. Gate shall be the type and swing shown. Gate frames shall conform to strength and coating requirements of ASTM F 1083 for Group IA, steel pipe, with external coating Type A, nominal pipe size (NPS) 1-1/2. Gate frames shall conform to strength and coating requirements of ASTM F 1043, for Group IC, steel pipe with external coating Type A or Type B, nominal pipe size (NPS) 1-1/2. Gate fabric shall be as specified for chain link fabric. Gate leaves more than 8 feet wide shall have either intermediate members and diagonal truss rods or shall have tubular members as necessary to provide rigid construction, free from sag or twist. Gate leaves less than 8 feet wide shall have truss rods or intermediate braces. Intermediate braces shall be provided on all gate frames with an electro-mechanical lock. Gate fabric shall be attached to the gate frame by method standard with the manufacturer except that welding will not be permitted. Latches, hinges, stops, keepers, rollers, and other hardware items shall be furnished as required for the operation of the gate. Latches shall be arranged for padlocking so that the padlock will be accessible from both sides of the gate. Stops shall be provided for holding the gates in the open position.

2.3 POSTS

2.3.1 Metal Posts for Chain Link Fence

ASTM F 1083, zinc-coated. Group IA, with external coating Type A steel pipe. Group IC steel pipe, zinc-coated with external coating Type A or Type B and Group II , roll-formed steel sections, shall meet the strength and coating requirements of ASTM F 1043. Group III, ASTM F 1043 steel H-section may be used for line posts in lieu of line post shapes specified for the other classes. Post shall be either Group IA steel pipe, Group IC, Group II, roll-formed steel sections, or Group III steel H-sections and shall be zinc coated (Type A) and polyvinyl chloride coated conforming to the requirements of ASTM F 1043. Sizes shall be as shown on the drawings. Line posts and terminal (corner, gate, and pull) posts selected shall be of

the same designation throughout the fence. Gate post shall be for the gate type specified subject to the limitation specified in ASTM F 900 and/or ASTM F 1184.

2.4 BRACES AND RAILS

ASTM F 1083, zinc-coated, Group IA, steel pipe, size NPS 1-1/4. Group IC steel pipe, zinc-coated, shall meet the strength and coating requirements of ASTM F 1043. Braces and rails shall be Group IA or Group IC, steel pipe, size NPS 1-1/4 or Group II,formed steel sections, size 1-21/32 inch and shall be zinc coated (Type A) and polyvinyl chloride-coated conforming to the requirements of ASTM F 1043. Group II, formed steel sections, size 1-21/32 inch, conforming to ASTM F 1043, may be used as braces and rails if Group II line posts are furnished.

2.5 WIRE

2.5.1 Tension Wire

Tension wire shall be Type I or Type II, Class 4 coating, in accordance with ASTM A 824.

2.6 ACCESSORIES

ASTM F 626. Ferrous accessories shall be zinc or aluminum coated. Truss rods shall be furnished for each terminal post. Truss rods shall be provided with turnbuckles or other equivalent provisions for adjustment. Tie wire for attaching fabric to rails, braces, and posts shall be 9 gauge steel wire and match the coating of the fence fabric. Tie wires for attaching fabric to tension wire shall be 16 gage stainless steel. Miscellaneous hardware coatings shall conform to ASTM A 153/A 153M unless modified.

2.7 CONCRETE

ASTM C 94/C 94M, using 3/4 inch maximum size aggregate, and having minimum compressive strength of 3000 psi at 28 days. Grout shall consist of one part portland cement to three parts clean, well-graded sand and the minimum amount of water to produce a workable mix.

2.8 PADLOCKS

Padlocks shall conform to ASTM F 883, Type , Size 1-3/4 inch. All padlocks shall be keyed into master key system as specified in Section 08710 DOOR HARDWARE.

PART 3 EXECUTION

3.1 INSTALLATION

Fence shall be installed to the lines and grades indicated. The area on either side of the fence line shall be cleared to the extent indicated. Line posts shall be spaced equidistant at intervals not exceeding 10 feet. Terminal (corner, gate, and pull) posts shall be set at abrupt changes in vertical and horizontal alignment. Fabric shall be continuous between terminal posts; however, runs between terminal posts shall not exceed 500 feet. Any damage to galvanized surfaces, including welding, shall be repaired with paint containing zinc dust in accordance with ASTM A 780.

3.2 EXCAVATION

Post holes shall be cleared of loose material. Waste material shall be spread where directed. The ground surface irregularities along the fence line shall be eliminated to the extent necessary to maintain a 2 inch clearance between the bottom of the fabric and finish grade.

3.3 POST INSTALLATION

3.3.1 Posts for Chain Link Fence

Posts shall be set plumb and in alignment. Except where solid rock is encountered, posts shall be set in concrete to the depth indicated on the drawings. Where solid rock is encountered with no overburden, posts shall be set to a minimum depth of 18 inches in rock. Where solid rock is covered with an overburden of soil or loose rock, posts shall be set to the minimum depth indicated on the drawing unless a penetration of 18 inches in solid rock is achieved before reaching the indicated depth, in which case depth of penetration shall terminate. All portions of posts set in rock shall be grouted. Portions of posts not set in rock shall be set in concrete from the rock to ground level. Posts set in concrete shall be set in holes not less than 16 inches for terminal posts and 12 inches for line posts. Diameters of holes in solid rock shall be at least 1 inch greater than the largest cross section of the post. Concrete and grout shall be thoroughly consolidated around each post, shall be free of voids and finished to form a dome. Concrete and grout shall be allowed to cure for 72 hours prior to attachment of any item to the posts. Group II line posts may be mechanically driven, for temporary fence construction only, if rock is not encountered. Driven posts shall be set to a minimum depth of 3 feet and shall be protected with drive caps when being set.

3.4 BRACES AND TRUSS RODS

Braces and truss rods shall be installed as indicated and in conformance with the standard practice for the fence furnished. Horizontal (compression) braces and diagonal truss (tension) rods shall be installed on fences over 6 feet in height. A center brace or 2 diagonal truss rods shall be installed on 12 foot fences. Braces and truss rods shall extend from terminal posts to line posts. Diagonal braces shall form an angle of approximately 40 to 50 degrees with the horizontal. No bracing is required on fences 6 feet high or less if a top rail is installed.

3.5 TENSION WIRES

Tension wires shall be installed along the top and bottom of the fence line and attached to the terminal posts of each stretch of the fence. Top tension wires shall be installed within the top 1 foot of the installed fabric. Bottom tension wire shall be installed within the bottom 6 inches of the installed fabric. Tension wire shall be pulled taut and shall be free of sag.

3.6 CHAIN LINK FABRIC

Chain link fabric shall be installed on the side of the post indicated. Fabric shall be attached to terminal posts with stretcher bars and tension bands. Bands shall be spaced at approximately 15 inch intervals. The fabric shall be installed and pulled taut to provide a smooth and uniform appearance free from sag, without permanently distorting the fabric diamond or reducing the fabric height. Fabric shall be fastened to line posts at

approximately 15 inch intervals and fastened to all rails and tension wires at approximately 24 inch intervals. Fabric shall be cut by untwisting and removing pickets. Splicing shall be accomplished by weaving a single picket into the ends of the rolls to be joined. The bottom of the installed fabric shall be 2 plus or minus 1/2 inch above the ground. For high security fence, after the fabric installation is complete, the fabric shall be exercised by applying a 50 pound push-pull force at the center of the fabric between posts; the use of a 30 pound pull at the center of the panel shall cause fabric deflection of not more than 2-1/2 inches when pulling fabric from the post side of the fence; every second fence panel shall meet this requirement; all failed panels shall be resecured and retested at the Contractor's expense.

3.7 BARBED WIRE SUPPORTING ARMS AND BARBED WIRE

3.7.1 General Requirements

Barbed wire supporting arms and barbed wire shall be installed as indicated and as recommended by the manufacturer. Supporting arms shall be anchored to the posts in a manner to prevent easy removal with hand tools Barbed wire shall be pulled taut and attached to the arms with clips or other means that will prevent easy removal.

3.8 GATE INSTALLATION

Gates shall be installed at the locations shown. Hinged gates shall be mounted to swing as indicated. Latches, stops, and keepers shall be installed as required. Slide gates shall be installed as recommended by the manufacturer. Padlocks shall be attached to gates or gate posts with chains. Hinge pins, and hardware shall be welded or otherwise secured to prevent removal.

-- End of Section --

SECTION TABLE OF CONTENTS

DIVISION 02 - SITE CONSTRUCTION

SECTION 02921A

SEEDING

11/02

PART 1 GENERAL

1.1 REFERENCES
1.2 SUBMITTALS
1.3 SOURCE INSPECTION
1.4 DELIVERY, INSPECTION, STORAGE, AND HANDLING
1.4.1 Delivery
1.4.1.1 Delivered Topsoil
1.4.1.2 Soil Amendments
1.4.1.3 Pesticides
1.4.2 Inspection
1.4.3 Storage
1.4.4 Handling

PART 2 PRODUCTS

2.1 SEED
2.1.1 Seed Classification
2.1.2 Permanent Seed Species and Mixtures
2.1.3 Temporary Seed Species
2.1.4 Quality
2.1.5 Seed Mixing
2.1.6 Substitutions
2.2 TOPSOIL
2.3 SOIL AMENDMENTS
2.3.1 pH Adjuster
2.3.1.1 Limestone
2.3.1.2 Hydrated Lime
2.3.1.3 Burnt Lime
2.3.2 Fertilizer
2.3.3 Nitrogen Carrier Fertilizer
2.3.4 Organic Material
2.3.4.1 Bonemeal
2.3.4.2 Rotted Manure
2.3.4.3 Decomposed Wood Derivatives
2.3.4.4 Recycled Compost
2.3.4.5 Worm Castings
2.3.5 Soil Conditioner
2.3.5.1 Sand
2.3.5.2 Super Absorbent Polymers
2.3.5.3 Calcined Clay
2.3.5.4 Gypsum
2.3.5.5 Expanded Shale, Clay, or Slate (ESCS)
2.4 MULCH
2.4.1 Straw
2.4.2 Hay
2.4.3 Wood Cellulose Fiber
2.4.4 Paper Fiber

2.5 WATER
2.6 PESTICIDE
2.7 SURFACE EROSION CONTROL MATERIAL
2.7.1 Surface Erosion Control Blanket
2.7.2 Surface Erosion Control Fabric
2.7.3 Surface Erosion Control Net
2.7.4 Surface Erosion Control Chemicals
2.7.5 Hydrophilic Colloids
2.7.6 Erosion Control Material Anchors

PART 3 EXECUTION

3.1 INSTALLING SEED TIME AND CONDITIONS
3.1.1 Seeding Time
3.1.2 Seeding Conditions
3.1.3 Equipment Calibration
3.1.4 Soil Test
3.2 SITE PREPARATION
3.2.1 Finished Grade and Topsoil
3.2.2 Application of Soil Amendments
3.2.2.1 Applying pH Adjuster
3.2.2.2 Applying Fertilizer
3.2.2.3 Applying Soil Conditioner
3.2.2.4 Applying Super Absorbent Polymers
3.2.3 Tillage
3.2.4 Prepared Surface
3.2.4.1 Preparation
3.2.4.2 Lawn Area Debris
3.2.4.3 Field Area Debris
3.2.4.4 Protection
3.3 INSTALLATION
3.3.1 Installing Seed
3.3.1.1 Broadcast Seeding, Permanent Grass
3.3.1.2 Broadcast Seeding, Temporary
3.3.1.3 Rolling
3.3.2 Hydroseeding
3.3.3 Mulching
3.3.3.1 Hay or Straw Mulch
3.3.3.2 Mechanical Anchor
3.3.3.3 Non-Asphaltic Tackifier
3.3.4 Watering Seed
3.4 SURFACE EROSION CONTROL
3.4.1 Surface Erosion Control Material
3.4.2 Temporary Seeding
3.4.2.1 Soil Amendments
3.4.2.2 Remaining Soil Amendments
3.5 QUANTITY CHECK
3.6 APPLICATION OF PESTICIDE
3.6.1 Technical Representative
3.6.2 Application
3.7 RESTORATION AND CLEAN UP
3.7.1 Restoration
3.7.2 Clean Up
3.8 PROTECTION OF INSTALLED AREAS
3.9 SEED ESTABLISHMENT PERIOD
3.9.1 Commencement
3.9.2 Satisfactory Stand of Grass Plants
3.9.2.1 Lawn Area
3.9.2.2 Field Area

3.9.3 Maintenance During Establishment Period
3.9.3.1 Mowing
3.9.3.2 Post-Fertilization
3.9.3.3 Pesticide Treatment
3.9.3.4 Repair or Reinstall
3.9.3.5 Maintenance Record

-- End of Section Table of Contents --

UFGS-02921A (November 2002)

SECTION 02921A

SEEDING
11/02

PART 1 GENERAL

1.1 REFERENCES

The publications listed below form a part of this specification to the extent referenced. The publications are referred to in the text by basic designation only.

AMERICAN SOCIETY FOR TESTING AND MATERIALS (ASTM)

ASTM C 602	(1995a) Agricultural Liming Materials
ASTM D 4972	(1995a) pH of Soils
ASTM D 5268	(1992; R 1996) Topsoil Used for Landscaping Purposes
ASTM D 5883	(1996el) Use of Rotary Kiln Produced Expanded Shale, Clay or Slate (ESCS) as a Mineral Amendment in Topsoil Used for Landscaping and Related Purposes

U.S. DEPARTMENT OF AGRICULTURE (USDA)

AMS Seed Act	(1995) Federal Seed Act Regulations Part 201

1.2 SUBMITTALS

Government approval is required for submittals with a "G" designation; submittals not having a "G" designation are for information only. When used, a designation following the "G" designation identifies the office that will review the submittal for the Government. The following shall be submitted in accordance with Section 01330 SUBMITTAL PROCEDURES:

SD-03 Product Data

Equipment
Surface Erosion Control Material
Chemical Treatment Material

Manufacturer's literature including physical characteristics, application and installation instructions for equipment, surface erosion control material and chemical treatment material.

A listing of equipment to be used for the seeding operation.

Delivery

Delivery schedule.

Finished Grade and Topsoil

Finished grade status.

Topsoil

Availability of topsoil from the stripping and stock piling operation.

Quantity Check

Bag count or bulk weight measurements of material used compared with area covered to determine the application rate and quantity installed.

Seed Establishment Period

Calendar time period for the seed establishment period. When there is more than one seed establishment period, the boundaries of the seeded area covered for each period shall be described.

Maintenance Record

Maintenance work performed, area repaired or reinstalled, diagnosis for unsatisfactory stand of grass plants.

Application of Pesticide

Pesticide treatment plan with sequence of treatment work with dates and times. The pesticide trade name, EPA registration number, chemical composition, formulation, concentration of original and diluted material, application rate of active ingredients, method of application, area treated, amount applied; and the name and state license number of the state certified applicator shall be included.

SD-04 Samples

Delivered Topsoil

Samples taken from several locations at the source.

Soil Amendments

A 10 pound sample.

Mulch

A 10 pound sample.

SD-06 Test Reports

Equipment Calibration

Certification of calibration tests conducted on the equipment used in the seeding operation.

Soil Test

Certified reports of inspections and laboratory tests, prepared by an independent testing agency, including analysis and interpretation of test results. Each report shall be properly identified. Test methods used and compliance with recognized test standards shall be described.

SD-07 Certificates

Seed
Topsoil
pH Adjuster
Fertilizer
Organic Material
Soil Conditioner
Mulch
Pesticide

Prior to the delivery of materials, certificates of compliance attesting that materials meet the specified requirements. Certified copies of the material certificates shall include the following:

a. Seed. Classification, botanical name, common name, percent pure live seed, minimum percent germination and hard seed, maximum percent weed seed content, and date tested.

b. Topsoil. Particle size, pH, organic matter content, textural class, soluble salts, chemical and mechanical analyses.

c. pH Adjuster. Calcium carbonate equivalent and sieve analysis.

d. Fertilizer. Chemical analysis and composition percent.

e. Organic Material: Composition and source.

f. Soil Conditioner: Composition and source.

g. Mulch: Composition and source.

h. Pesticide. EPA registration number and registered uses.

1.3 SOURCE INSPECTION

The source of delivered topsoil shall be subject to inspection.

1.4 DELIVERY, INSPECTION, STORAGE, AND HANDLING

1.4.1 Delivery

A delivery schedule shall be provided at least 10 calendar days prior to the first day of delivery.

1.4.1.1 Delivered Topsoil

Prior to the delivery of any topsoil, its availability shall be verified in paragraph TOPSOIL. A soil test shall be provided for topsoil delivered to the site.

1.4.1.2 Soil Amendments

Soil amendments shall be delivered to the site in the original, unopened containers bearing the manufacturer's chemical analysis. In lieu of containers, soil amendments may be furnished in bulk. A chemical analysis shall be provided for bulk deliveries.

1.4.1.3 Pesticides

Pesticide material shall be delivered to the site in the original, unopened containers bearing legible labels indicating the EPA registration number and the manufacturer's registered uses.

1.4.2 Inspection

Seed shall be inspected upon arrival at the job site for conformity to species and quality. Seed that is wet, moldy, or bears a test date five months or older, shall be rejected. Other materials shall be inspected for compliance with specified requirements. The following shall be rejected: open soil amendment containers or wet soil amendments; topsoil that contains slag, cinders, stones, lumps of soil, sticks, roots, trash or other material over a minimum 1-1/2 inch diameter; and topsoil that contains viable plants and plant parts. Unacceptable materials shall be removed from the job site.

1.4.3 Storage

Materials shall be stored in designated areas. Seed, lime, and fertilizer shall be stored in cool, dry locations away from contaminants. Chemical treatment material shall be stored according to manufacturer's instructions and not with seeding operation materials.

1.4.4 Handling

Except for bulk deliveries, materials shall not be dropped or dumped from vehicles.

PART 2 PRODUCTS

2.1 SEED

2.1.1 Seed Classification

State-certified seed of the latest season's crop shall be provided in original sealed packages bearing the producer's guaranteed analysis for percentages of mixture, purity, germination, hard seed, weed seed content, and inert material. Labels shall be in conformance with AMS Seed Act and applicable state seed laws.

2.1.2 Permanent Seed Species and Mixtures

Permanent seed species and mixtures shall be proportioned by weight as follows:

Botanical Name	Common Name	Mixture Percent by Weight	Percent Pure Live Seed
	LAWN SEED		
Cynodon Dactylon	Common Bermuda	95	85

Seed mixtures shall not contain millet or any other large-seed producing grass.

2.1.3 Temporary Seed Species

Temporary seed species for surface erosion control or overseeding shall be as follows:

Botanical Name	Common Name	Percent Pure Live Seed
Secale Cerealeorum	Rye Grain	95

Seed mixtures shall not contain millet or any other large-seed producing grass.

2.1.4 Quality

Weed seed shall be a maximum 1 percent by weight of the total mixture.

2.1.5 Seed Mixing

The mixing of seed may be done by the seed supplier prior to delivery, or on site as directed.

2.1.6 Substitutions

Substitutions will not be allowed without written request and approval from the Contracting Officer.

2.2 TOPSOIL

Topsoil shall be as defined in ASTM D 5268. When available, the topsoil shall be the existing surface soil stripped and stockpiled onsite in accordance with Section 02300 EARTHWORK. When additional topsoil is required beyond the available topsoil from the stripping operation, topsoil shall be delivered and amended as recommended by the soil test for the seed specified. Topsoil shall be free from slag, cinders, stones, lumps of soil, sticks, roots, trash or other material over a minimum 1-1/2 inch diameter. Topsoil shall be free from viable plants and plant parts.

2.3 SOIL AMENDMENTS

Soil amendments shall consist of pH adjuster, fertilizer, organic material and soil conditioners meeting the following requirements. Vermiculite shall not be used.

2.3.1 pH Adjuster

The pH adjuster shall be an agricultural liming material in accordance with ASTM C 602. These materials may be burnt lime, hydrated lime, ground limestone, sulfur, or shells. The pH adjuster shall be used to create a favorable soil pH for the plant material specified.

2.3.1.1 Limestone

Limestone material shall contain a minimum calcium carbonate equivalent of 80 percent. Gradation: A minimum 95 percent shall pass through a No. 8 sieve and a minimum 55 percent shall pass through a No. 60 sieve. To raise soil pH, ground limestone shall be used.

2.3.1.2 Hydrated Lime

Hydrated lime shall contain a minimum calcium carbonate equivalent of 110 percent. Gradation: A minimum 100 percent shall pass through a No. 8 sieve and a minimum 97 percent shall pass through a No. 60 sieve.

2.3.1.3 Burnt Lime

Burnt lime shall contain a minimum calcium carbonate equivalent of 140 percent. Gradation: A minimum 95 percent shall pass through a No. 8 sieve and a minimum 35 percent shall pass through a No. 60 sieve.

2.3.2 Fertilizer

The nutrients ratio shall be 3 percent nitrogen, 5 percent phosphorus, and 2 percent potassium. Fertilizer shall be controlled release commercial grade, free flowing, uniform in composition, and consist of a nitrogen-phosphorus-potassium ratio. The fertilizer shall be derived from sulphur coated urea, urea formaldehyde, plastic or polymer coated pills, or isobutylenediurea (IBDU). Fertilizer shall be balanced with the inclusion of trace minerals and micro-nutrients.

2.3.3 Nitrogen Carrier Fertilizer

The nutrients ratio shall be 12 percent nitrogen, 4 percent phosphorus, and 8 percent potassium. Nitrogen carrier fertilizer shall be commercial grade, free flowing, and uniform in composition. The fertilizer may be a liquid nitrogen solution.

2.3.4 Organic Material

Organic material shall consist of either bonemeal, rotted manure, decomposed wood derivatives, recycled compost, or worm castings.

2.3.4.1 Bonemeal

Bonemeal shall be finely ground, steamed bone product containing from 2 to 4 percent nitrogen and 16 to 40 percent phosphoric acid.

2.3.4.2 Rotted Manure

Rotted manure shall be unleached horse, chicken or cattle manure containing a maximum 25 percent by volume of straw, sawdust, or other bedding materials. It shall contain no chemicals or ingredients harmful to plants. The manure shall be heat treated to kill weed seeds and be free of stones,

sticks, and soil.

2.3.4.3 Decomposed Wood Derivatives

Decomposed wood derivatives shall be ground bark, sawdust, yard trimmings, or other wood waste material that is free of stones, sticks, soil, and toxic substances harmful to plants, and is fully composted or stabilized with nitrogen.

2.3.4.4 Recycled Compost

Compost shall be a well decomposed, stable, weed free organic matter source. Compost shall be derived from food; agricultural or industrial residuals; biosolids (treated sewage sludge); yard trimmings; or source-separated or mixed solid waste. The compost shall possess no objectionable odors and shall not resemble the raw material from which it was derived. The material shall not contain substances toxic to plants. Gradation: The compost material shall pass through a 3/8 inch screen, possess a pH of 5.5 to 8.0, and have a moisture content between 35-55 percent by weight. The material shall not contain more than 1 percent by weight of man-made foreign matter. Compost shall be cleaned of plastic materials larger than 2 inches in length. The Contractor shall comply with EPA requirements in accordance with Section 01670 RECYCLED / RECOVERED MATERIALS.

2.3.4.5 Worm Castings

Worm castings shall be screened from worms and food source, and shall be commercially packaged.

2.3.5 Soil Conditioner

Soil conditioner shall be sand, super absorbent polymers, calcined clay, or gypsum for use singly or in combination to meet the requirements of the soil test.

2.3.5.1 Sand

Sand shall be clean and free of toxic materials. Gradation: A minimum 95 percent by weight shall pass a No. 10 sieve and a minimum 10 percent by weight shall pass a No. 16 sieve. Greensand shall be balanced with the inclusion of trace minerals and nutrients.

2.3.5.2 Super Absorbent Polymers

To improve water retention in soils, super absorbent polymers shall be sized and applied according to the manufacturer's recommendations. Polymers shall be added as a soil amendment and be cross-linked polyacrylamide, with an absorption capacity of 250-400 times its weight. Polymers shall also be added to the seed and be a starch grafted polyacrylonitrite, with graphite added as a tacky sticker. It shall have an absorption capacity of 100 plus times its weight.

2.3.5.3 Calcined Clay

Calcined clay shall be granular particles produced from montmorillonite clay calcined to a minimum temperature of 1200 degrees F. Gradation: A minimum 90 percent shall pass a No. 8 sieve; a minimum 99 percent shall be retained on a No. 60 sieve; and a maximum 2 percent shall pass a No. 100

sieve. Bulk density: A maximum 40 pounds per cubic foot.

2.3.5.4 Gypsum

Gypsum shall be commercially packaged, free flowing, and a minimum 95 percent calcium sulfate by volume.

2.3.5.5 Expanded Shale, Clay, or Slate (ESCS)

Rotary kiln produced ESCS material shall be in conformance with ASTM D 5883.

2.4 MULCH

Mulch shall be free from weeds, mold, and other deleterious materials. Mulch materials shall be native to the region.

2.4.1 Straw

Straw shall be stalks from oats, wheat, rye, barley, or rice, furnished in air-dry condition and with a consistency for placing with commercial mulch-blowing equipment.

2.4.2 Hay

Hay shall be native hay, sudan-grass hay, broomsedge hay, or other herbaceous mowings, furnished in an air-dry condition suitable for placing with commercial mulch-blowing equipment.

2.4.3 Wood Cellulose Fiber

Wood cellulose fiber shall not contain any growth or germination-inhibiting factors and shall be dyed an appropriate color to facilitate placement during application. Composition on air-dry weight basis: 9 to 15 percent moisture, pH range from 4.5 to 6.0.

2.4.4 Paper Fiber

Paper fiber mulch shall be recycled news print that is shredded for the purpose of mulching seed.

2.5 WATER

Water shall be the responsibility of the Contractor, unless otherwise noted. Water shall not contain elements toxic to plant life.

2.6 PESTICIDE

Pesticide shall be insecticide, herbicide, fungicide, nematocide, rodenticide or miticide. For the purpose of this specification, a soil fumigant shall have the same requirements as a pesticide. The pesticide material shall be EPA registered and approved.

2.7 SURFACE EROSION CONTROL MATERIAL

Surface erosion control material shall conform to the following:

2.7.1 Surface Erosion Control Blanket

Blanket shall be machine produced mat of wood excelsior formed from a web

of interlocking wood fibers; covered on one side with either knitted straw blanket-like mat construction; covered with biodegradable plastic mesh; or interwoven biodegradable thread, plastic netting, or twisted kraft paper cord netting.

2.7.2 Surface Erosion Control Fabric

Fabric shall be knitted construction of polypropylene yarn with uniform mesh openings 3/4 to 1 inch square with strips of biodegradable paper. Filler paper strips shall have a minimum life of 6 months.

2.7.3 Surface Erosion Control Net

Net shall be heavy, twisted jute mesh, weighing approximately 1.22 pounds per linear yard and 4 feet wide with mesh openings of approximately 1 inch square.

2.7.4 Surface Erosion Control Chemicals

Chemicals shall be high-polymer synthetic resin or cold-water emulsion of selected petroleum resins.

2.7.5 Hydrophilic Colloids

Hydrophilic colloids shall be physiologically harmless to plant and animal life without phytotoxic agents. Colloids shall be naturally occurring, silicate powder based, and shall form a water insoluble membrane after curing. Colloids shall resist mold growth.

2.7.6 Erosion Control Material Anchors

Erosion control anchors shall be as recommended by the manufacturer.

PART 3 EXECUTION

3.1 INSTALLING SEED TIME AND CONDITIONS

3.1.1 Seeding Time

Seed shall be installed from Jan to March for spring establishment; from Jun to Aug for summer establishment; and from Aug to Sept for fall establishment.

3.1.2 Seeding Conditions

Seeding operations shall be performed only during periods when beneficial results can be obtained. When drought, excessive moisture, or other unsatisfactory conditions prevail, the work shall be stopped when directed. When special conditions warrant a variance to the seeding operations, proposed alternate times shall be submitted for approval.

3.1.3 Equipment Calibration

Immediately prior to the commencement of seeding operations, calibration tests shall be conducted on the equipment to be used. These tests shall confirm that the equipment is operating within the manufacturer's specifications and will meet the specified criteria. The equipment shall be calibrated a minimum of once every day during the operation. The calibration test results shall be provided within 1 week of testing.

3.1.4 Soil Test

Delivered topsoil, existing soil in smooth graded areas, and stockpiled topsoil shall be tested in accordance with ASTM D 5268 and ASTM D 4972 for determining the particle size, pH, organic matter content, textural class, chemical analysis, soluble salts analysis, and mechanical analysis. Sample collection on site shall be random over the entire site. Sample collection for stockpiled topsoil shall be at different levels in the stockpile. The soil shall be free from debris, noxious weeds, toxic substances, or other materials harmful to plant growth. The test shall determine the quantities and type of soil amendments required to meet local growing conditions for the seed species specified.

3.2 SITE PREPARATION

3.2.1 Finished Grade and Topsoil

The Contractor shall verify that finished grades are as indicated on drawings, and the placing of topsoil, smooth grading, and compaction requirements have been completed in accordance with Section 02300 EARTHWORK, prior to the commencement of the seeding operation.

3.2.2 Application of Soil Amendments

3.2.2.1 Applying pH Adjuster

The pH adjuster shall be applied as recommended by the soil test The pH adjuster shall be incorporated into the soil to a maximum 4 inch depth or may be incorporated as part of the tillage operation.

3.2.2.2 Applying Fertilizer

The application rate shall be 90 pounds per 1000 square yards. Fertilizer shall be incorporated into the soil to a maximum 4 inch depth or may be incorporated as part of the tillage operation.

3.2.2.3 Applying Soil Conditioner

The soil conditioner shall be as recommended by the soil test. The soil conditioner shall be spread uniformly over the soil a minimum 1 inch depth and thoroughly incorporated by tillage into the soil to a maximum 4 inch depth.

3.2.2.4 Applying Super Absorbent Polymers

Polymers shall be spread uniformly over the soil as recommended by the manufacturer and thoroughly incorporated by tillage into the soil to a maximum 4 inch depth.

3.2.3 Tillage

Soil on slopes up to a maximum 3-horizontal-to-1-vertical shall be tilled to a minimum 4 inch depth. On slopes between 3-horizontal-to-1-vertical and 1-horizontal-to-1 vertical, the soil shall be tilled to a minimum 2 inch depth by scarifying with heavy rakes, or other method. Rototillers shall be used where soil conditions and length of slope permit. On slopes 1-horizontal-to-1 vertical and steeper, no tillage is required. Drainage patterns shall be maintained as indicated on drawings. Areas compacted by

construction operations shall be completely pulverized by tillage. Soil used for repair of surface erosion or grade deficiencies shall conform to topsoil requirements. The pH adjuster, fertilizer, and soil conditioner may be applied during this procedure.

3.2.4 Prepared Surface

3.2.4.1 Preparation

The prepared surface shall be a maximum 1 inch below the adjoining grade of any surfaced area. New surfaces shall be blended to existing areas. The prepared surface shall be completed with a light raking to remove debris.

3.2.4.2 Lawn Area Debris

Debris and stones over a minimum 5/8 inch in any dimension shall be removed from the surface.

3.2.4.3 Field Area Debris

Debris and stones over a minimum 3 inch in any dimension shall be removed from the surface.

3.2.4.4 Protection

Areas with the prepared surface shall be protected from compaction or damage by vehicular or pedestrian traffic and surface erosion.

3.3 INSTALLATION

Prior to installing seed, any previously prepared surface compacted or damaged shall be reworked to meet the requirements of paragraph SITE PREPARATION. Seeding operations shall not take place when the wind velocity will prevent uniform seed distribution.

3.3.1 Installing Seed

Seeding method shall be Broadcast Seeding. Seeding procedure shall ensure even coverage. Gravity feed applicators, which drop seed directly from a hopper onto the prepared soil, shall not be used because of the difficulty in achieving even coverage, unless otherwise approved. Absorbent polymer powder shall be mixed with the dry seed at the rate recommended by the manufacturer.

3.3.1.1 Broadcast Seeding, Permanent Grass

Seed shall be uniformly broadcast at the rate of 2 pounds of hulled Bermuda per 1000 square feet for spring planting and 5 pounds of unhulled Bermuda mixed with rye grain for winter planting, using broadcast seeders. Half the total rate of seed application shall be broadcast in 1 direction, with the remainder of the seed rate broadcast at 90 degrees from the first direction. Seed shall be covered a maximum 1/4 inch depth by disk harrow, steel mat drag, cultipacker, or other approved device.

3.3.1.2 Broadcast Seeding, Temporary

Seed shall be uniformly broadcast at the rate of 120 pounds of rye grain per acre using broadcast seeders. Half the total rate of seed application

shall be broadcast in 1 direction, with the remainder of the seed rate broadcast at 90 degrees from the first direction. Seed shall be covered a maximum 1/4 inch depth by disk harrow, steel mat drag, cultipacker, or other approved device.

3.3.1.3 Rolling

The entire area shall be firmed with a roller not exceeding 90 pounds per foot roller width. Slopes over a maximum 3-horizontal-to-1 vertical shall not be rolled. Areas seeded with seed drills equipped with rollers shall not be rolled.

3.3.2 Hydroseeding

Seed shall be mixed to ensure broadcast at the rate of 1/4 pounds per 1000 square feet. Seed and fertilizer shall be added to water and thoroughly mixed to meet the rates specified. The time period for the seed to be held in the slurry shall be a maximum 24 hours. Wood cellulose fiber mulch and tackifier shall be added at the rates recommended by the manufacturer after the seed, fertilizer, and water have been thoroughly mixed to produce a homogeneous slurry. Slurry shall be uniformly applied under pressure over the entire area. The hydroseeded area shall not be rolled.

3.3.3 Mulching

3.3.3.1 Hay or Straw Mulch

Hay or straw mulch shall be spread uniformly at the rate of 2 tons per acre. Mulch shall be spread by hand, blower-type mulch spreader, or other approved method. Mulching shall be started on the windward side of relatively flat areas or on the upper part of steep slopes, and continued uniformly until the area is covered. The mulch shall not be bunched or clumped. Sunlight shall not be completely excluded from penetrating to the ground surface. All areas installed with seed shall be mulched on the same day as the seeding. Mulch shall be anchored immediately following spreading.

3.3.3.2 Mechanical Anchor

Mechanical anchor shall be a V-type-wheel land packer; a scalloped-disk land packer designed to force mulch into the soil surface; or other suitable equipment.

3.3.3.3 Non-Asphaltic Tackifier

Hydrophilic colloid shall be applied at the rate recommended by the manufacturer, using hydraulic equipment suitable for thoroughly mixing with water. A uniform mixture shall be applied over the area.

3.3.4 Watering Seed

Watering shall be started immediately after completing the seeding of an area. Water shall be applied to supplement rainfall at a rate sufficient to ensure moist soil conditions to a minimum 1 inch depth. Run-off and puddling shall be prevented. Watering trucks shall not be driven over turf areas, unless otherwise directed. Watering of other adjacent areas or plant material shall be prevented.

3.4 SURFACE EROSION CONTROL

3.4.1 Surface Erosion Control Material

Where indicated or as directed, surface erosion control material shall be installed in accordance with manufacturer's instructions. Placement of the material shall be accomplished without damage to installed material or without deviation to finished grade.

3.4.2 Temporary Seeding

The application rate shall be 44 pounds per 1000 square yards. When directed during contract delays affecting the seeding operation or when a quick cover is required to prevent surface erosion, the areas designated shall be seeded in accordance with temporary seed species listed under Paragraph SEED.

3.4.2.1 Soil Amendments

When soil amendments have not been applied to the area, the quantity of 1/2 of the required soil amendments shall be applied and the area tilled in accordance with paragraph SITE PREPARATION. The area shall be watered in accordance with paragraph Watering Seed.

3.4.2.2 Remaining Soil Amendments

The remaining soil amendments shall be applied in accordance with the paragraph Tillage when the surface is prepared for installing seed.

3.5 QUANTITY CHECK

For materials provided in bags, the empty bags shall be retained for recording the amount used. For materials provided in bulk, the weight certificates shall be retained as a record of the amount used. The amount of material used shall be compared with the total area covered to determine the rate of application used. Differences between the quantity applied and the quantity specified shall be adjusted as directed.

3.6 APPLICATION OF PESTICIDE

When application of a pesticide becomes necessary to remove a pest or disease, a pesticide treatment plan shall be submitted and coordinated with the installation pest management program.

3.6.1 Technical Representative

The certified installation pest management coordinator shall be the technical representative, and shall be present at all meetings concerning treatment measures for pest or disease control. They may be present during treatment application.

3.6.2 Application

A state certified applicator shall apply required pesticides in accordance with EPA label restrictions and recommendations. Clothing and personal protective equipment shall be used as specified on the pesticide label. A closed system is recommended as it prevents the pesticide from coming into contact with the applicator or other persons. Water for formulating shall only come from designated locations. Filling hoses shall be fitted with a

backflow preventer meeting local plumbing codes or standards. Overflow shall be prevented during the filling operation. Prior to each day of use, the equipment used for applying pesticide shall be inspected for leaks, clogging, wear, or damage. Any repairs are to be performed immediately. A pesticide plan shall be submitted.

3.7 RESTORATION AND CLEAN UP

3.7.1 Restoration

Existing turf areas, pavements, and facilities that have been damaged from the seeding operation shall be restored to original condition at Contractor's expense.

3.7.2 Clean Up

Excess and waste material shall be removed from the seeded areas and shall be disposed offsite. Adjacent paved areas shall be cleaned.

3.8 PROTECTION OF INSTALLED AREAS

Immediately upon completion of the seeding operation in an area, the area shall be protected against traffic or other use by erecting barricades and providing signage as required, or as directed.

3.9 SEED ESTABLISHMENT PERIOD

3.9.1 Commencement

The seed establishment period to obtain a healthy stand of grass plants shall begin on the first day of seeding work under this contract and shall continue through the remaining life of the contract and end 3 months after the last day of the seeding operation required by this contract. Written calendar time period shall be furnished for the seed establishment period. When there is more than 1 seed establishment period, the boundaries of the seeded area covered for each period shall be described.

3.9.2 Satisfactory Stand of Grass Plants

Grass plants shall be evaluated for species and health when the grass plants are a minimum 1 inch high.

3.9.2.1 Lawn Area

A satisfactory stand of grass plants from the seeding operation for a lawn area shall be a minimum 100 grass plants per square foot. Bare spots shall be a maximum 6 inches square. The total bare spots shall be a maximum 2 percent of the total seeded area.

3.9.2.2 Field Area

A satisfactory stand of grass plants from the seeding operation for a field area shall be a minimum 100 grass plants per square foot. The total bare spots shall not exceed 2 percent of the total seeded area.

3.9.3 Maintenance During Establishment Period

Maintenance of the seeded areas shall include eradicating weeds, insects and diseases; protecting embankments and ditches from surface erosion;

maintaining erosion control materials and mulch; protecting installed areas from traffic; mowing; watering; and post-fertilization.

3.9.3.1 Mowing

Grass will be mowed to maintain a height of 2-1/2 inches to 3 inches when the height of the turf becomes 4 inches. Clippings will be removed when the amount of the cut turf is heavy enough to damage the turfed areas.

3.9.3.2 Post-Fertilization

The application rate shall be 90 pounds per 1000 square yards. A maximum 1/2 pound per 1000 square feet of actual available nitrogen shall be provided to the grass plants. The application shall be timed prior to the advent of winter dormancy and shall be made without burning the installed grass plants.

3.9.3.3 Pesticide Treatment

Treatment for disease or pest shall be in accordance with paragraph APPLICATION OF PESTICIDE.

3.9.3.4 Repair or Reinstall

Unsatisfactory stand of grass plants and mulch shall be repaired or reinstalled, and eroded areas shall be repaired in accordance with paragraph SITE PREPARATION.

3.9.3.5 Maintenance Record

A record of each site visit shall be furnished, describing the maintenance work performed; areas repaired or reinstalled; and diagnosis for unsatisfactory stand of grass plants.

-- End of Section --

SECTION TABLE OF CONTENTS

DIVISION 02 - SITE CONSTRUCTION

SECTION 02922A

SODDING

07/02

PART 1 GENERAL

1.1 REFERENCES
1.2 SUBMITTALS
1.3 SOURCE INSPECTION
1.4 DELIVERY, INSPECTION, STORAGE, AND HANDLING
1.4.1 Delivery
1.4.1.1 Sod
1.4.1.2 Delivered Topsoil
1.4.1.3 Soil Amendments
1.4.1.4 Pesticides
1.4.2 Inspection
1.4.3 Storage
1.4.3.1 Sod
1.4.3.2 Other Material Storage
1.4.4 Handling
1.4.5 Time Limitation

PART 2 PRODUCTS

2.1 SOD
2.1.1 Sod Classification
2.1.2 Grass Species
2.1.3 Quality
2.1.4 Thickness
2.1.5 Anchors
2.1.6 Substitutions
2.2 TOPSOIL
2.3 SOIL AMENDMENTS
2.3.1 pH Adjuster
2.3.1.1 Limestone
2.3.1.2 Hydrated Lime
2.3.1.3 Burnt Lime
2.3.2 Fertilizer
2.3.3 Nitrogen Carrier Fertilizer
2.3.4 Organic Material
2.3.4.1 Bonemeal
2.3.4.2 Rotted Manure
2.3.4.3 Decomposed Wood Derivatives
2.3.4.4 Recycled Compost
2.3.4.5 Worm Castings
2.3.5 Soil Conditioner
2.3.5.1 Sand
2.3.5.2 Super Absorbent Polymers
2.3.5.3 Calcined Clay
2.3.5.4 Gypsum
2.3.5.5 Expanded Shale, Clay, or Slate (ESCS)
2.4 WATER

2.5 PESTICIDE

PART 3 EXECUTION

3.1 INSTALLING SOD TIME AND CONDITIONS
3.1.1 Sodding Time
3.1.2 Sodding Conditions
3.1.3 Equipment Calibration
3.1.4 Soil Test
3.2 SITE PREPARATION
3.2.1 Finished Grade and Topsoil
3.2.1.1 Finished Grade for Airfields
3.2.2 Application of Soil Amendments
3.2.2.1 Applying pH Adjuster
3.2.2.2 Applying Fertilizer
3.2.2.3 Applying Soil Conditioner
3.2.2.4 Applying Super Absorbent Polymers
3.2.3 Tillage
3.2.4 Prepared Surface
3.2.4.1 Preparation
3.2.4.2 Protection
3.3 INSTALLATION
3.3.1 Installing Sod
3.3.2 Finishing
3.3.3 Rolling
3.3.4 Watering Sod
3.4 TEMPORARY SEEDING
3.4.1 Soil Amendments, Tillage and Watering
3.4.2 Remaining Soil Amendments
3.5 QUANTITY CHECK
3.6 APPLICATION OF PESTICIDE
3.6.1 Technical Representative
3.6.2 Application
3.7 RESTORATION AND CLEAN UP
3.7.1 Restoration
3.7.2 Clean Up
3.8 PROTECTION OF INSTALLED AREAS
3.9 SOD ESTABLISHMENT PERIOD
3.9.1 Commencement
3.9.2 Satisfactory Stand of Grass Plants
3.9.3 Maintenance During Establishment Period
3.9.3.1 Mowing
3.9.3.2 Post-Fertilization
3.9.3.3 Pesticide Treatment
3.9.3.4 Repair
3.9.3.5 Maintenance Record

-- End of Section Table of Contents --

UFGS-02922A (July 2002)

SECTION 02922A

SODDING
07/02

PART 1 GENERAL

1.1 REFERENCES

AMERICAN SOCIETY FOR TESTING AND MATERIALS (ASTM)

ASTM C 602	(1995a; R 2001) Agricultural Liming Materials
ASTM D 4972	(2001) pH of Soils
ASTM D 5268	(1992; R 1997) Topsoil Used for Landscaping Purposes
ASTM D 5883	(1996el) Use of Rotary Kiln Produced Expanded Shale, Clay or Slate (ESCS) as a Mineral Amendment in Topsoil Used for Landscaping and Related Purposes

1.2 SUBMITTALS

Government approval is required for submittals with a "G" designation; submittals not having a "G" designation are for information only. When used, a designation following the "G" designation identifies the office that will review the submittal for the Government. The following shall be submitted in accordance with Section 01330 SUBMITTAL PROCEDURES:

SD-03 Product Data

Equipment
Chemical Treatment Material

A listing of equipment to be used for the sodding operation. Manufacturer's literature including physical characteristics, application and installation instructions for equipment and chemical treatment material.

Delivery

Delivery schedule.

Finished Grade and Topsoil

Finished grade status.

Topsoil

Availability of topsoil from the stripping and stock piling operation.

Quantity Check

Bag count or bulk weight measurements of material used compared with area covered to determine the application rate and quantity installed. The quantity of sod used shall be compared against the total area installed.

Sod Establishment Period

Calendar time period for the sod establishment period. When there is more than one sod establishment period, the boundaries of the sodded area covered for each period shall be described.

Maintenance Record

Maintenance work performed, area repaired or reinstalled, diagnosis for unsatisfactory stand of grass plants.

Application of Pesticide

Pesticide treatment plan with sequence of treatment work with dates and times. The pesticide trade name, EPA registration number, chemical composition, formulation, concentration of original and diluted material, application rate of active ingredients, method of application, area treated, amount applied; and the name and state license number of the state certified applicator shall be included.

SD-04 Samples

Delivered Topsoil

Samples taken from several locations at the source.

Soil Amendments

A 10 pound sample.

SD-06 Test Reports

Equipment Calibration

Certification of calibration tests conducted on the equipment used in the sodding operation.

Soil Test

Certified reports of inspections and laboratory tests, prepared by an independent testing agency, including analysis and interpretation of test results. Each report shall be properly identified. Test methods used and compliance with recognized test standards shall be described.

SD-07 Certificates

Sod
Topsoil
pH Adjuster
Fertilizer

Organic Material
Soil Conditioner
Pesticide

Prior to the delivery of materials, certificates of compliance attesting that materials meet the specified requirements. Certified copies of the material certificates shall include the following:

a. Sod. Classification, botanical name, common name, mixture percentage of species, percent purity, quality grade, field location and state certification.

b. Topsoil. Particle size, pH, organic matter content, textural class, soluble salts, chemical and mechanical analyses.

c. pH Adjuster. Calcium carbonate equivalent and sieve analysis.

d. Fertilizer. Chemical analysis and composition percent.

e. Organic Material: Composition and source.

f. Soil Conditioner: Composition and source.

g. Pesticide. EPA registration number and registered uses.

1.3 SOURCE INSPECTION

The sources of sod material and delivered topsoil shall be subject to inspection.

1.4 DELIVERY, INSPECTION, STORAGE, AND HANDLING

1.4.1 Delivery

A delivery schedule shall be provided at least 10 calendar days prior to the first day of delivery.

1.4.1.1 Sod

Sod shall be protected during delivery to prevent desiccation, internal heat buildup, or contamination.

1.4.1.2 Delivered Topsoil

Prior to the delivery of any topsoil, its availability shall be verified in paragraph TOPSOIL. A soil test shall be provided for topsoil delivered to the site.

1.4.1.3 Soil Amendments

Soil amendments shall be delivered to the site in the original, unopened containers bearing the manufacturer's chemical analysis. In lieu of containers, soil amendments may be furnished in bulk. A chemical analysis shall be provided for bulk deliveries.

1.4.1.4 Pesticides

Pesticide material shall be delivered to the site in the original, unopened containers bearing legible labels indicating the EPA registration number and the manufacturer's registered uses.

1.4.2 Inspection

Sod shall be inspected upon arrival at the job site for conformity to species. Sod shall be checked for visible broadleaf weeds, and a visible consistency with no obvious patches of foreign grasses that exceed 2 percent of the canopy. Sod that is heating up, dry, moldy, yellow, irregularly shaped, torn, or of uneven thickness shall be rejected. Other materials shall be inspected for compliance with specified requirements. Open soil amendment containers or wet soil amendments; topsoil that contains slag, cinders, stones, lumps of soil, sticks, roots, trash or other material over a minimum 1-1/2 inch diameter; and topsoil that contains viable plants and plant parts, shall be rejected. Unacceptable materials shall be removed from the job site.

1.4.3 Storage

1.4.3.1 Sod

Sod shall be stored in designated areas and kept in a moist condition by watering with a fine mist, and covered with moist burlap, straw, or other covering. Covering shall allow air to circulate, preventing internal heat from building up. Sod shall be protected from exposure to wind and direct sunlight until installed.

1.4.3.2 Other Material Storage

Materials shall be stored in designated areas. Lime and fertilizer shall be stored in cool, dry locations, away from contaminants. Chemical treatment material shall be stored according to manufacturer's instructions and not with sod operation materials.

1.4.4 Handling

Sod shall not be damaged during handling. Except for bulk deliveries, materials shall not be dropped or dumped from vehicles.

1.4.5 Time Limitation

Time limitation between harvesting and installing sod shall be a maximum 36 hours.

PART 2 PRODUCTS

2.1 SOD

2.1.1 Sod Classification

State-certified sod shall be provided as classified by applicable state laws. Sod section shall be sized to permit rolling and lifting without breaking.

2.1.2 Grass Species

Grass species shall be proportioned as follows:

Botanical Name	Common Name	Mixture Percent
Cynodon Dactylon	Burmuda grass	98

2.1.3 Quality

Sod shall be relatively free of thatch, diseases, nematodes, soil-borne insects, weeds or undesirable plants, stones larger than 1 inch in diameter, woody plant roots, and other materials detrimental to a healthy stand of grass plants. Broadleaf weeds and patches of foreign grasses shall be a maximum 2 percent of the sod section.

2.1.4 Thickness

Sod shall be machine cut to a minimum 1-3/8 inch thickness. Measurement for thickness shall exclude top growth and thatch.

2.1.5 Anchors

Sod anchors shall be as recommended by the sod supplier.

2.1.6 Substitutions

Substitutions will not be allowed without written request and approval from the Contracting Officer.

2.2 TOPSOIL

Topsoil shall be as defined in ASTM D 5268. When available, the topsoil shall be the existing surface soil stripped and stockpiled onsite in accordance with Section 02300 EARTHWORK. When additional topsoil is required beyond the available topsoil from stripping operation, topsoil shall be delivered and amended as recommended by the soil test for the sod species specified. Topsoil shall be free from slag, cinders, stones, lumps of soil, sticks, roots, trash, or other material over a maximum 1-1/2 inch diameter. Topsoil shall be free from viable plants and plant parts.

2.3 SOIL AMENDMENTS

Soil amendments shall consist of pH adjuster, fertilizer, organic material, and soil conditioners meeting the following requirements. Vermiculite shall not be used.

2.3.1 pH Adjuster

The pH adjuster shall be an agricultural liming material in accordance with ASTM C 602. These materials may be burnt lime, hydrated lime, ground limestone, or shells. The pH adjuster shall be used to create a favorable soil pH for the plant material specified.

2.3.1.1 Limestone

Limestone material shall contain a minimum calcium carbonate equivalent of 80 percent. Gradation: A minimum 95 percent shall pass through a No. 8

sieve and a minimum 55 percent shall pass through a No. 60 sieve. To raise soil pH, ground limestone shall be used.

2.3.1.2 Hydrated Lime

Hydrated lime shall contain a minimum calcium carbonate equivalent of 110 percent. Gradation: A minimum 100 percent shall pass through a No. 8 sieve and a minimum 97 percent shall pass through a No. 60 sieve.

2.3.1.3 Burnt Lime

Burnt lime shall contain a minimum calcium carbonate equivalent of 140 percent. Gradation: A minimum 95 percent shall pass through a No. 8 sieve and a minimum 35 percent shall pass through a No. 60 sieve.

2.3.2 Fertilizer

It shall be as recommended by the soil test. Fertilizer shall be controlled release commercial grade, free flowing, uniform in composition, and consist of a nitrogen-phosphorus-potassium ratio. The fertilizer shall be derived from sulphur coated urea, urea formaldehyde, plastic or polymer coated pills, or isobutylenediurea (IBDU). Fertilizer shall be balanced with the inclusion of trace minerals and micro-nutrients.

2.3.3 Nitrogen Carrier Fertilizer

It shall be as recommended by the soil test Nitrogen carrier fertilizer shall be commercial grade, free flowing, and uniform in composition. The fertilizer may be a liquid nitrogen solution.

2.3.4 Organic Material

Organic material shall consist of either bonemeal, rotted manure, decomposed wood derivatives, recycled compost, or worm castings.

2.3.4.1 Bonemeal

Bonemeal shall be finely ground, steamed bone product containing from 2 to 4 percent nitrogen and 16 to 40 percent phosphoric acid.

2.3.4.2 Rotted Manure

Rotted manure shall be unleached horse, chicken or cattle manure containing a maximum 25 percent by volume straw, sawdust, or other bedding materials. Manure shall contain no chemicals or ingredients harmful to plants. The manure shall be heat treated to kill weed seeds and be free of stones, sticks, and soil.

2.3.4.3 Decomposed Wood Derivatives

Decomposed wood derivatives shall be ground bark, sawdust, yard trimmings, or other wood waste material free of stones, sticks, soil, and toxic substances harmful to plants, fully composted or stabilized with nitrogen.

2.3.4.4 Recycled Compost

Compost shall be a well decomposed, stable, weed free organic matter source. Compost shall be derived from food; agricultural or industrial residuals; biosolids (treated sewage sludge); yard trimmings; or

source-separated or mixed solid waste. The compost shall possess no objectionable odors and shall not resemble the raw material from which it was derived. The material shall not contain substances toxic to plants. Gradation: The compost material shall pass through a 3/8 inch screen, possess a pH of 5.5 to 8.0, and have a moisture content between 35-55 percent by weight. The material shall not contain more than 1 percent or less by weight of man-made foreign matter. Compost shall be cleaned of plastic materials larger than 2 inches in length. The Contractor shall comply with EPA requirements in accordance with Section 01670 RECYCLED / RECOVERED MATERIALS.

2.3.4.5 Worm Castings

Worm castings shall be screened from worms and food source, and shall be commercially packaged.

2.3.5 Soil Conditioner

Soil conditioner shall be sand, super absorbent polymers, calcined clay, or gypsum for use singly or in combination to meet the requirements for topsoil.

2.3.5.1 Sand

Sand shall be clean and free of toxic materials. Gradation: A minimum 95 percent by weight shall pass a No. 10 sieve and a minimum 10 percent by weight shall pass a No. 16 sieve. Greensand shall be balanced with the inclusion of trace minerals and nutrients.

2.3.5.2 Super Absorbent Polymers

To improve water retention in soils, super absorbent polymers shall be sized and applied according to the manufacturer's recommendations. Polymers shall be added as a soil amendment and be cross-linked polyacrylamide with an absorption capacity of 250-400 times its weight.

2.3.5.3 Calcined Clay

Calcined clay shall be granular particles produced from montmorillonite clay calcined to minimum temperature of 1200 degrees F. Gradation: A minimum 90 percent passing No. 8 sieve; a minimum 99 percent shall be retained on a No. 60 sieve; and a maximum 2 percent shall pass a No. 100 sieve. Bulk density: A maximum 40 pounds per cubic foot.

2.3.5.4 Gypsum

Gypsum shall be commercially packaged, free flowing, and a minimum 95 percent calcium sulfate by volume.

2.3.5.5 Expanded Shale, Clay, or Slate (ESCS)

Rotary kiln produced ESCS material shall be in conformance with ASTM D 5883.

2.4 WATER

Water shall be the responsibility of the Contractor unless otherwise noted. Water shall not contain elements toxic to plant life.

2.5 PESTICIDE

Pesticide shall be insecticide, herbicide, fungicide, nematocide, rodenticide or miticide. For the purpose of this specification, a soil fumigant shall have the same requirements as a pesticide. The pesticide material shall be EPA registered and approved.

PART 3 EXECUTION

3.1 INSTALLING SOD TIME AND CONDITIONS

3.1.1 Sodding Time

Sod shall be installed from 15 May to 15 July for spring establishment; from 15 Aug to 15 Oct for summer establishment; and from 6 Oct to 30 Apr for fall establishment.

3.1.2 Sodding Conditions

Sodding operations shall be performed only during periods when beneficial results can be obtained. When drought, excessive moisture or other unsatisfactory conditions prevail, the work shall be stopped when directed. When special conditions warrant a variance to the sodding operations, proposed alternate times shall be submitted for approval.

3.1.3 Equipment Calibration

Immediately prior to the commencement of sodding operations, calibration tests shall be conducted on the equipment to be used. These tests shall confirm that the equipment is operating within the manufacturer's specifications and will meet the specified criteria. The equipment shall be calibrated a minimum of once every day during the operation. Provide calibration test results within one week of testing.

3.1.4 Soil Test

Delivered topsoil, existing soil in smooth graded areas, and stockpiled topsoil shall be tested in accordance with ASTM D 5268 and ASTM D 4972 for determining the particle size, pH, organic matter content, textural class, chemical analysis, soluble salts analysis, and mechanical analysis. Sample collection on site shall be random over the entire site. Sample collection for stockpiled topsoil shall be at different levels in the stockpile. The soil shall be free from debris, noxious weeds, toxic substances, or other materials harmful to plant growth. The test shall determine the quantities and type of soil amendments required to meet local growing conditions for the sod species specified.

3.2 SITE PREPARATION

3.2.1 Finished Grade and Topsoil

Prior to the commencement of the sodding operation, the Contractor shall verify that finished grades are as indicated on drawings; the placing of topsoil, smooth grading, and compaction requirements have been completed in accordance with Section 02300 EARTHWORK.

3.2.1.1 Finished Grade for Airfields

Finished grades in sodded areas shall be undercut sufficiently so the top

of newly laid sod will be 1-1/2 inches below adjacent paved areas and flush with any adjacent seeded or turfed areas except when directed otherwise by the Contracting Officer.

3.2.2 Application of Soil Amendments

3.2.2.1 Applying pH Adjuster

The pH adjuster shall be applied at the rate recommended by the soil test. The pH adjuster shall be incorporated into the soil to a maximum 4 inch depth or may be incorporated as part of the tillage operation.

3.2.2.2 Applying Fertilizer

The fertilizer shall be applied at the rate recommended by the soil test. Fertilizer shall be incorporated into the soil to a maximum 4 inch depth or may be incorporated as part of the tillage or hydroseeding operation.

3.2.2.3 Applying Soil Conditioner

The soil conditioner shall be as recommended by the soil test. The soil conditioner shall be spread uniformly over the soil a minimum 1 inch depth and thoroughly incorporated by tillage into the soil to a maximum 4 inches depth.

3.2.2.4 Applying Super Absorbent Polymers

Polymers shall be spread uniformly over the soil as recommended by the manufacturer and thoroughly incorporated by tillage into the soil to a maximum 2 inches deep prior to placement of sod.

3.2.3 Tillage

Soil on slopes up to a maximum 3-horizontal-to-1-vertical shall be tilled to a minimum 4 inches deep. On slopes between 3-horizontal-to-1-vertical and 1-horizontal-to-1 vertical, the soil shall be tilled to a minimum 2 inches deep by scarifying with heavy rakes, or other method. Rototillers shall be used where soil conditions and length of slope permit. On slopes 1-horizontal-to-1 vertical and steeper, no tillage is required. Drainage patterns shall be maintained as indicated on drawings. Areas compacted by construction operations shall be completely pulverized by tillage. Soil used for repair of surface erosion or grade deficiencies shall conform to topsoil requirements. The pH adjuster, fertilizer, and soil conditioner may be applied during this procedure.

3.2.4 Prepared Surface

3.2.4.1 Preparation

The prepared surface shall be a maximum 1 inch below the adjoining grade of any surfaced area. New surfaces shall be blended to existing areas. The prepared surface shall be rolled and completed with a light raking to remove from the surface debris and stones over a minimum 5/8 inch in any dimension.

3.2.4.2 Protection

Areas within the prepared surface shall be protected from compaction or damage by vehicular or pedestrian traffic and surface erosion.

3.3 INSTALLATION

Prior to installing sod, any previously prepared surface compacted or damaged shall be reworked to meet the requirements of paragraph SITE PREPARATION. Areas shall be sodded as indicated. Adequate soil moisture shall be ensured prior to sodding by spraying water on the area to be sodded and wetting the soil to a maximum 1 inch depth.

3.3.1 Installing Sod

Rows of sod sections shall be placed parallel to and tightly against each other. Joints shall be staggered laterally. The sod sections shall not be stretched or overlapped. All joints shall be butted tight. Voids and air drying of roots shall be prevented. Sod sections shall be laid across the slope on long slopes. Sod sections shall be laid at right angles to the flow of water in ditches. Sod sections shall be anchored on slopes steeper than 3-horizontal-to-1-vertical. Anchoring may be required when surface weight or pressure upon placed sod sections is anticipated to cause lateral movement. Sod anchors shall be placed a minimum 2 feet on center with a minimum 2 anchors per sod section.

3.3.2 Finishing

Displacement of the sod shall be prevented by tamping or rolling the sod in place and knitting the sod to the soil. Air pockets shall be eliminated and a true and even surface shall be provided. Frayed edges shall be trimmed, and holes or missing corners shall be patched with sod.

3.3.3 Rolling

The entire area shall be firmed with a roller not exceeding 90 pounds per foot roller width. Slopes over a maximum 3-horizontal-to-1 vertical shall not be rolled.

3.3.4 Watering Sod

Watering shall be started immediately after completing each day of installing sod. Water shall be applied at least 3 times per week to supplement rainfall, at a rate sufficient to ensure moist soil conditions to a minimum depth of 1 inch. Run-off, puddling, and wilting shall be prevented. Unless otherwise directed, watering trucks shall not be driven over turf areas. Watering of other adjacent areas or plant material shall be prevented.

3.4 TEMPORARY SEEDING

The application rate shall be 6 pounds per 1000 square yards. When directed during contract delays affecting the sodding operation or when a quick cover is required to prevent surface erosion, the areas designated shall be seeded with annual seed provided in the project, an annual seed; species and application rate shall be submitted for approval.

3.4.1 Soil Amendments, Tillage and Watering

When soil amendments have not been applied to the area, the quantity of 1/2 of the required soil amendments shall be applied and the area tilled in accordance with paragraph SITE PREPARATION. The area shall be watered in accordance with paragraph Watering Sod as required.

3.4.2 Remaining Soil Amendments

The remaining soil amendments shall be applied in accordance with the paragraph Tillage when the surface is prepared for installing sod.

3.5 QUANTITY CHECK

For materials provided in bags, the empty bags shall be retained for recording the amount used. For materials provided in bulk, the weight certificates shall be retained as a record of the amount used. The amount of the material used shall be compared with the total area covered to determine the rate of application. The quantity of sod used shall be compared against the total area established with sod. Differences between the quantity applied and the quantity specified shall be adjusted as directed.

3.6 APPLICATION OF PESTICIDE

When application of a pesticide becomes necessary to remove a pest or disease, a pesticide treatment plan shall be submitted and coordinated with the installation pest management program.

3.6.1 Technical Representative

The certified installation pest management coordinator shall be the technical representative, and shall be present at all meetings concerning treatment measures for pest or disease control. They may be present during treatment application.

3.6.2 Application

A state certified applicator shall apply required pesticides in accordance with EPA label restrictions and recommendations. Clothing and personal protective equipment shall be used as specified on the pesticide label. A closed system is recommended as it prevents the pesticide from coming into contact with the applicator or other persons. Water for formulating shall only come from designated locations. Filling hoses shall be fitted with a backflow preventer meeting local plumbing codes or standards. Overflow shall be prevented during the filling operation. Prior to each day of use, the equipment used for applying pesticide shall be inspected for leaks, clogging, wear, or damage. Any repairs are to be performed immediately.

3.7 RESTORATION AND CLEAN UP

3.7.1 Restoration

Existing turf areas, pavements, and facilities that have been damaged from the sodding operation shall be restored to original condition at Contractor's expense.

3.7.2 Clean Up

Excess and waste material shall be removed from the sodded areas and shall be disposed offsite. Adjacent paved areas shall be cleaned.

3.8 PROTECTION OF INSTALLED AREAS

Immediately upon completion of the sodding operation in an area, the area

shall be protected against traffic or other use by erecting barricades and providing signage as required, or as directed.

3.9 SOD ESTABLISHMENT PERIOD

3.9.1 Commencement

The sod establishment period to obtain a healthy stand of grass plants shall commence on the first day of sodding work under this contract and shall continue through the remaining life of the contract and end 12 months after the last day of sodding operation required by this contract. Written calendar time period shall be furnished for the sod establishment period. When there is more than 1 sod establishment period, the boundaries of the sodded area covered for each period shall be described. The sod establishment period shall be modified for inclement weather, shut down periods, or for separate completion dates of areas.

3.9.2 Satisfactory Stand of Grass Plants

Grass plants shall be evaluated for species and health. A satisfactory stand of grass plants from the sodding operation shall be living sod uniform in color and leaf texture. Bare spots shall be a maximum 2 inch square. Joints between sod pieces shall be tight and free from weeds and other undesirable growth.

3.9.3 Maintenance During Establishment Period

Maintenance of the sodded areas shall include eradicating weeds, insects and diseases; protecting embankments and ditches from surface erosion; maintaining erosion control materials and mulch; protecting installed areas from traffic; mowing; watering; and post-fertilization.

3.9.3.1 Mowing

Sodded areas shall be mowed to a minimum 3 inch height when the turf is a maximum 4 inch height. Clippings shall be removed when the amount cut prevents sunlight from reaching the ground surface.

3.9.3.2 Post-Fertilization

The fertilizer shall be applied as recommended by the soil test. A maximum 1/2 pound per 1000 square feet of actual available nitrogen shall be provided to the grass plants. The application shall be timed prior to the advent of winter dormancy and shall be made without burning the installed grass plants.

3.9.3.3 Pesticide Treatment

Treatment for disease or pest shall be in accordance with paragraph APPLICATION OF PESTICIDE.

3.9.3.4 Repair

Unsatisfactory stand of grass plants shall be repaired or reinstalled, and eroded areas shall be repaired in accordance with paragraph SITE PREPARATION.

3.9.3.5 Maintenance Record

A record of each site visit shall be furnished which describes the maintenance work performed; areas repaired or reinstalled; and diagnosis for unsatisfactory stand of grass plants.

-- End of Section --